SPECIAL PACKAGING INSTRUCTION

CODE ID	SPI NO. (TPO)
98747	F01-041-0531
	SHEET 1 OF 6

PART OR DRAWING NO.	NATIONAL STOCK NO.	CURRENT REV
16T7302-805	1560-01-077-1314 WF	K

ITEM NOMENCLATURE	ORIGINAL DATE
RUDDER, AIRCRAFT	82155

ILL. K. KNIGHTON
P.S. K. RESTORFF
CHK. S. PEELER
AUTH. N. CORONADO

MILITARY PRESERVATION IAW MIL-STD-2073

SERVICEABLE METHOD: 10
UNSERVICEABLE METHOD: 10
QUP 001
ICQ 000
CLEANING & DRYING: IAW MIL-STD-2073
PRESERVATIVE: N/A

MARKING IAW MIL-STD-129

SPECIAL MARKINGS:

A) SPI NO. F01-041-0531
MARK THE SPI NUMBER ON THE IDENTIFICATION SIDE OF CONTAINER.

B) REUSABLE CONTAINER & DUNNAGE DO NOT DESTROY.

C) CENTER OF BALANCE

CLOSURE

LEVEL A: IAW: ASTM D6251
LEVEL B: IAW: ASTM D6251

PACKING AS SPECIFIED BELOW AND BILL OF MATERIALS

LEVEL	SPEC	STYLE	TYPE	CL	VRTY	GR	TR
A	ASTM D6251	A	III	2			B
B	ASTM D6251	A	III	2			A

	LEVEL A	LEVEL B
GROSS CU FT	44.531	44.531
GROSS WT LBS	348	348
DESIGN FRAGILITY G	110	110

	LENGTH	WIDTH	DEPTH
CNTR I.D.			
LEVEL A:	112	16	32
LEVEL B:	112	16	32
CNTR O.D.			
LEVEL A:	114	18	37 1/2
LEVEL B:	114	18	37 1/2
ITEM DIM	107	26	3
ITEM WT.	38 LBS		

REVISIONS		
LTR	DESCRIPTION	DATE
K	UPDATED BOM, ADDED DISTRIBUTION STATEMENT AND DESTRUCTION NOTICE	18037

DISTRIBUTION STATEMENT D: DISTRIBUTION AUTHORIZED TO DOD AND U.S. DOD CONTRACTORS ONLY, ADMINISTRATIVE OR OPERATIONAL USE, 05 FEBRUARY 2018. OTHER REQUESTS FOR THIS DOCUMENT SHALL BE REFERRED TO 406 SCMS/GULAA, (PACKAGING DIVISION), HILL AFB, UTAH 84056.

DESTRUCTION NOTICE: FOLLOW THE PROCEDURES IN DOD 5220.22-M, NATIONAL INDUSTRIAL SECURITY PROGRAM OPERATING MANUAL (NISPOM), SECTION 5-705, OR DOD 5200.1-R, INFORMATION SECURITY PROGRAM, CHAPTER VI. FOR UNCLASSIFIED, LIMITED DOCUMENTS, DESTROY BY ANY METHOD THAT WILL PREVENT DISCLOSURE OF CONTENTS OR RECONSTRUCTION OF THE DOCUMENT.

SPECIAL PACKAGING INSTRUCTION	CODE ID 98747	SPI NO. (TPO) F01-041-0531
ITEM NOMENCLATURE RUDDER, AIRCRAFT		SHEET 2 OF 6

P/N	QTY REQD	NOMENCLATURE OR DESCRIPTION	SIZE: (INCHES UNLESS SPECIFIED) TOLERANCES ON FRAC. ± 1/8, DECIMAL ± .10, ANGLES ± 1°	MATERIAL SPECIFICATION
-15	3	STRAPPING	3/4 X .015 X AS REQUIRED	ASTM D3953 TYPE 1, RD, FIN. A
-14	1	SADDLE	15 3/4 X 12 1/2 X 3/4	A-A-55057 TYPE A 3 D
-13	1	SADDLE	15 3/4 X 12 1/2 X 3/4	A-A-55057 TYPE A 3 C
-12	8	CLEAT, INSIDE	1 X 3 (NOM) X 26 3/4	ASTM D6199 CLASS 2 1
-11	1	WRAP	112 X 45	A-A-3174 TYPE I, CL. 1, GR. A, FIN. 1 2
-10	A/R	CUSHIONING, FELT	1/4 X AS REQUIRED	ASTM D2475 1 3
-9	2	BRACING	16 X 2 1/2 X 3/4	A-A-55057 TYPE A 2 3
-8	4	BRACING	6 X 6 X 3/4	A-A-55057 TYPE A 2 E
-7	4	NUT, HEX	3/8	FF-N-836 TYPE II, STYLE 4
-6	4	WASHER, PLAIN	3/8	ASME B18.21.1
-5	4	BOLT, CARRIAGE	10 X 3/8	ASME B18.5
-4	1	MOUNTING BLOCK	4 X 4 (NOM) X 16	ASTM D6199 CLASS 2 2 3 A
-3	2	MOUNTING BLOCK	4 X 4 (NOM) X 16	ASTM D6199 CLASS 2 2 3 B
-2	2	MOUNTING BLOCK	2 X 4 (NOM) X 16	ASTM D6199 CLASS 2 2
-1	4	SKID	4 X 4 (NOM) X 18	ASTM D6199 CLASS 2

CAUTION NOTICES

NOTICE 1: ASSETS PACKAGED IN ACCORDANCE WITH PREVIOUS EDITIONS OF THIS SPI DO NOT REQUIRE REPACKAGING IF THE INTEGRITY OF THE SPI IS MAINTAINED.

NOTICE 2: SEE SPIRES FOR A COMPLETE LISTING OF NSN's ASSIGNED TO THIS SPI.

NOTICE 3: PACKAGING MATERIAL MAY BE SUBSTITUTED IF IT MEETS THE REQUIREMENTS OF MIL-STD-2073, PROVIDES EQUAL OR BETTER PROTECTION AND THERE IS NO INCREASED COST TO THE GOVERNMENT.

NOTICE 4: OVERSEAS AND FMS PACKAGING MUST MEET THE REQUIREMENTS OF LEVEL A PACKAGING.

INTERNATIONAL STANDARDS FOR PHYTOSANITARY MEASURES
REVISION OF ISPM NO. 15
REVISION OF WOOD PACKAGING MATERIAL FOR INTERNATIONAL TRADE

THE FOLLOWING STATEMENT IS IN COMPLIANCE WITH THE UNITED NATIONS-IMPLEMENTED RESTRICTIONS ON WOOD PACKAGING MATERIAL (WPM). THIS REQUIREMENT IS SPECIFICALLY CONCERNED WITH INVASIVE SPECIES SUCH AS THE PINEWOOD NEMATODE. WPM IS DEFINED AS WOOD PALLETS, SKIDS, LOAD BOARDS, PALLET COLLARS, WOODEN BOXES, REELS, DUNNAGE, CRATES, FRAMES, AND CLEATS. THE STATEMENT BELOW CITES THE REQUIREMENTS IN DETAIL AND COVERS LUMBER FOR BUILDING CONTAINERS AND PALLETS USED FOR DELIVERIES, RESULTING IN SHIPMENTS WORLDWIDE (DIRECT, OR THROUGH AIR LOGISTICS CENTERS (ALC), CONTAINER CONSOLIDATION POINTS (CCP), OR OTHER BASES).

WOODEN LUMBER, WOODEN PALLET AND PACKAGING/CONTAINER STATEMENT:

ALL WOODEN LUMBER, WOODEN PALLETS, AND WOODEN CONTAINERS PRODUCED ENTIRELY OR IN PART OF WOOD PACKAGING MATERIAL (WPM) SHALL BE CONSTRUCTED FROM DEBARKED WOOD IN ADDITION TO THE APPLICATION OF HEAT-TREATED (HT) MATERIAL (HT TO 56 DEGREES CENTIGRADE OR 133 DEGREES FAHRENHEIT FOR 30 MINUTES). CERTIFICATION/MARKING IS REQUIRED BY AN ACCREDITED AGENCY RECOGNIZED BY THE AMERICAN LUMBER STANDARDS COMMITTEE (ALSC). FOR REFERENCE DOCUMENTATION, SEE LATEST REVISION OF "INTERNATIONAL STANDARDS FOR PHYTOSANITARY MEASURES (ISPM NO. 15), "REGULATION OF WOOD PACKAGING MATERIAL IN INTERNATIONAL TRADE."

NOTES

1. WRAP ITEM IN REF.-11 TO ENSURE THAT BARE ITEM DOES NOT MAKE DIRECT CONTACT WITH CUSHIONING, REF.-10.

2. NAIL MOUNTING BLOCKS, REF.-2, TO REF.-3 AND REF.-4 PRIOR TO CUTTING BLOCKS OUT USING NAILS OR STAPLES CONFORMING TO ASTM F1667. USE ASTM F1667 TO SECURE IN PLACE REF.-8 & REF.-12, REF.-9.

3. USE ADHESIVE A-A-59692, TYPE II, TO SECURE CUSHIONING, REF.-10, TO MOUNTING BLOCKS, REF.-3, -4, -9, AND SADDLES, REF.-13 & -14.

SPECIAL PACKAGING INSTRUCTION	CODE ID 98747	SPI NO. (TPO) F01-041-0531
ITEM NOMENCLATURE RUDDER, AIRCRAFT		SHEET 4 OF 6

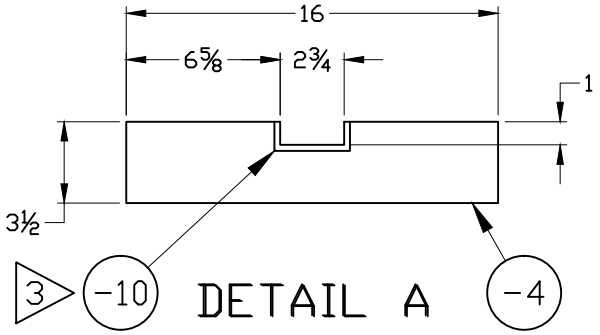

DETAIL A

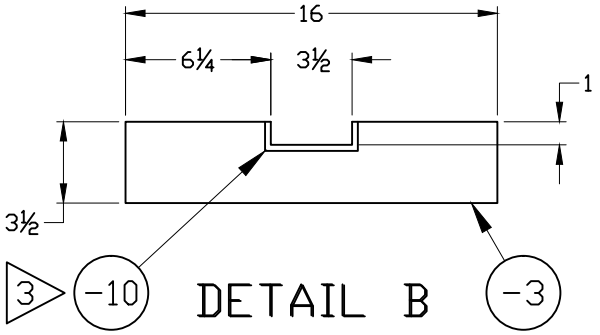

DETAIL B

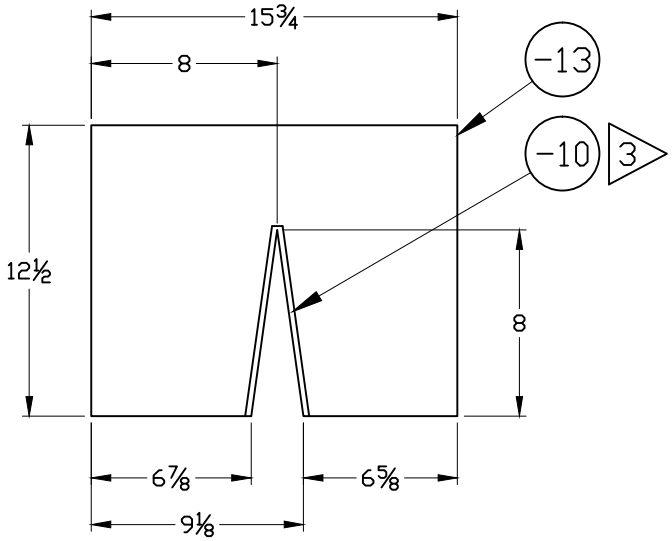

DETAIL C

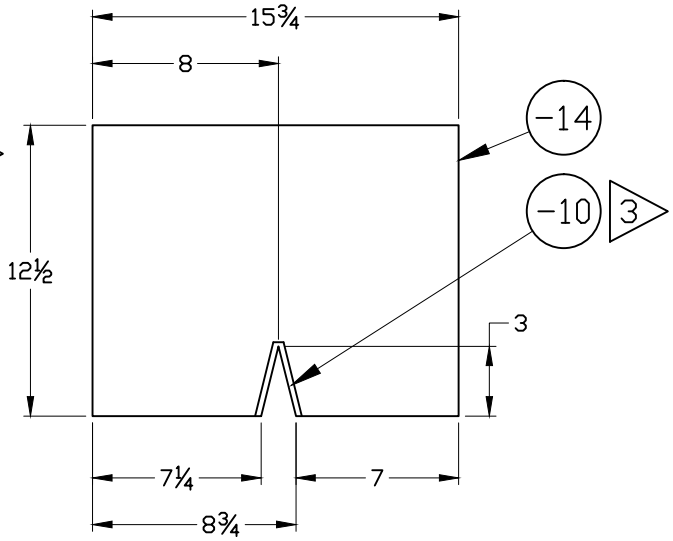

DETAIL D

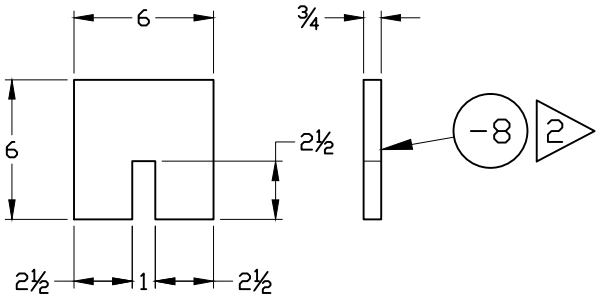

DETAIL E

SPECIAL PACKAGING INSTRUCTION	CODE ID 98747	SPI NO. (TPO) F01-041-0531
ITEM NOMENCLATURE RUDDER, AIRCRAFT		SHEET 5 OF 6

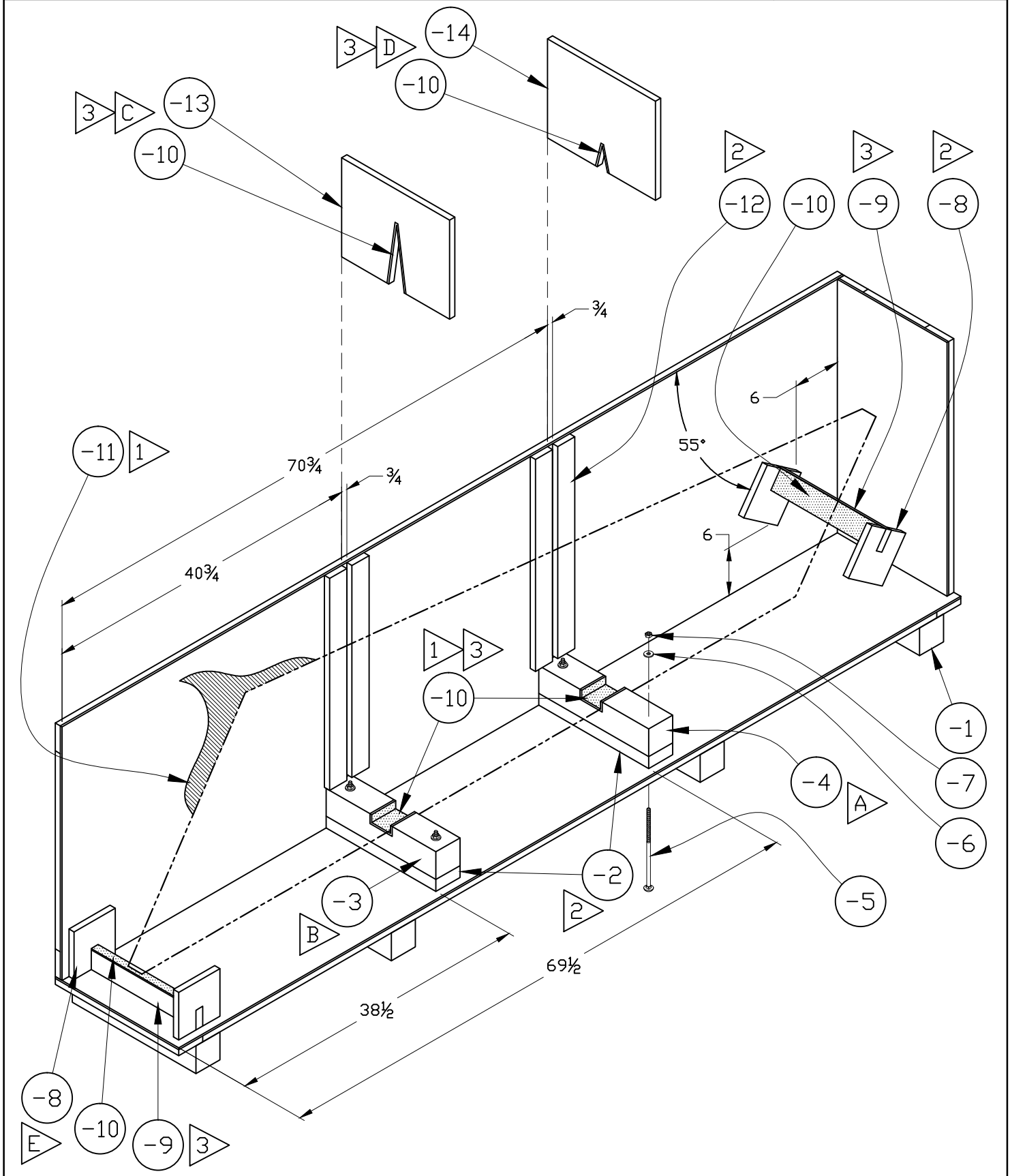
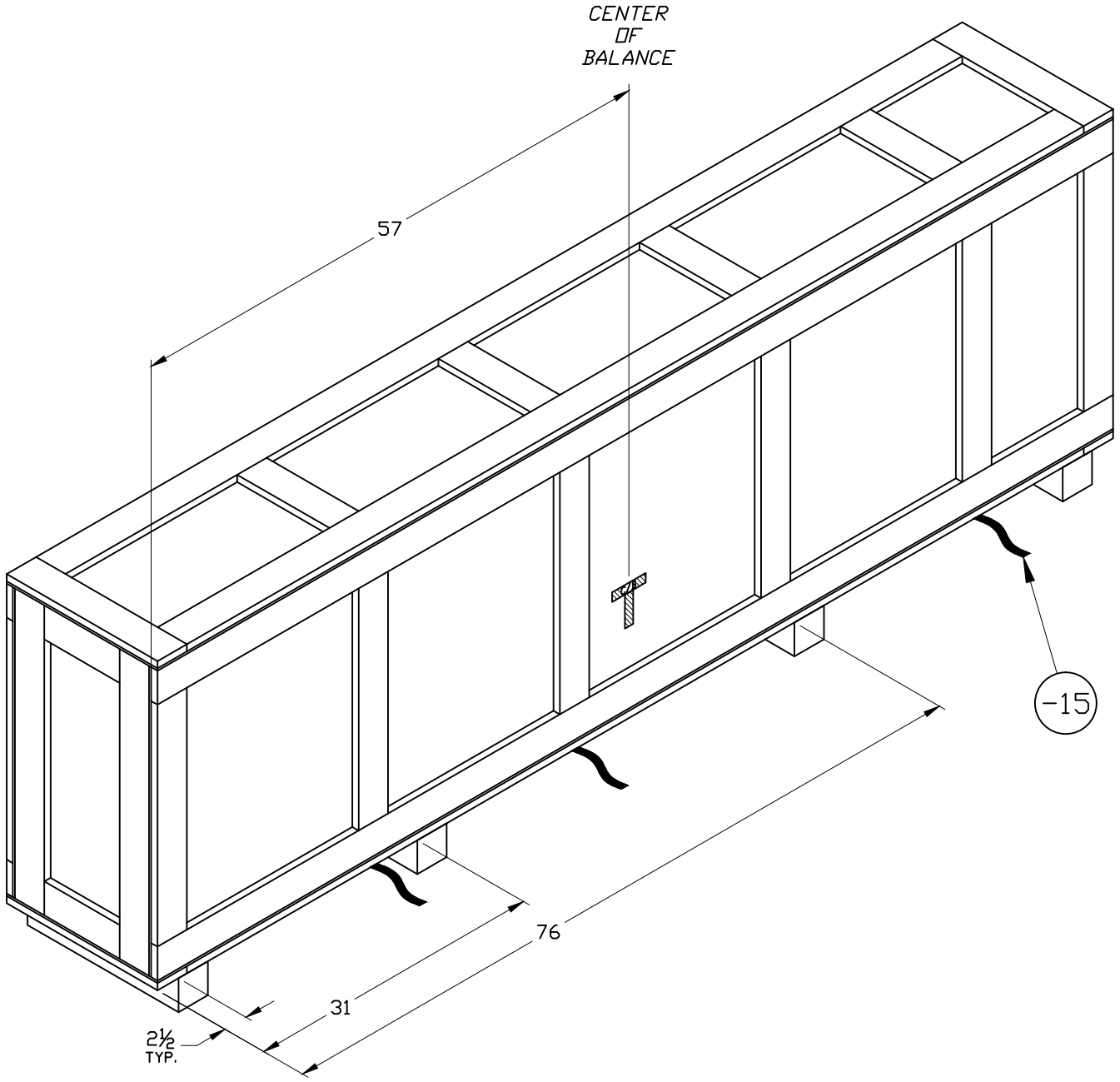
SPECIAL PACKAGING INSTRUCTION	CODE ID 98747	SPI NO. (TPO) F01-041-0531
ITEM NOMENCLATURE RUDDER, AIRCRAFT		SHEET 6 OF 6