| PROJECT | SHEET NUMBER |
|---|---|
| WV NP NERI 107(3) | A01 |

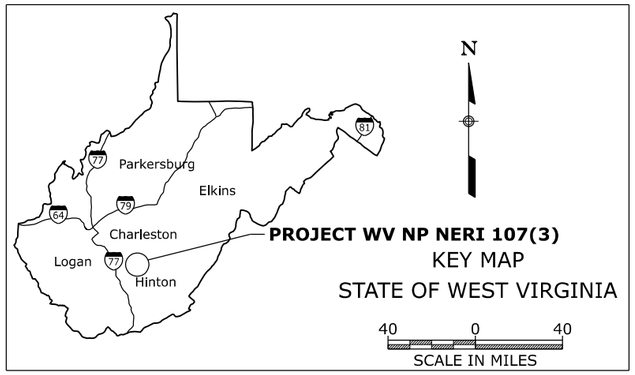


# U.S. DEPARTMENT OF THE INTERIOR
# NATIONAL PARK SERVICE
# NEW RIVER GORGE
# NATIONAL PARK AND PRESERVE

PLANS FOR PROPOSED PROJECT

# WV NP NERI 107(3)

REPAIR OF A SLIDE ON CUNARD RIVER ACCESS ROAD
USING AN ANCHORED SOLDIER PILE WALL

## FAYETTE COUNTY
## WEST VIRGINIA

## INDEX TO SHEETS


| SHEET NO | DESCRIPTION |
|---|---|
| A01 | Title Sheet |
| A02-A03 | Symbols And Abbreviations |
| A04 | Location Map And Temporary Traffic Control Plan |
| A05 | Survey Information Sheet |
| A06-A09 | Alignment Chain Description |
| A10 | Superelevation Tables |
| B01-B04 | Typical Sections |
| C01-C03 | Tabulation of Quantities |
| C04-C05 | Summaries And Schedules |
| D01-D04 | Plans And Profiles |
| F01 | Wall Profile |
| K01-K02 | Drainage Profiles |
| M01 | Erosion And Sediment Control Narrative |
| M02 | Erosion And Sediment Control Plan |
| P01-P02 | Signing And Striping Plans |
| R01-R12 | Wall Plans |
| S01-S24 | Standards And Details |
| T01-T23 | Roadway Cross Sections |


## DESCRIPTION OF PROJECT

**IMPROVEMENT:** Construction of an anchored soldier pile wall, reconstruction of the roadway section with asphalt concrete pavement and aggregate base, guardrail replacement with MGS, drainage improvements, and other miscellaneous work.

**PROJECT LENGTH:** 0.40 Miles

**LANE MILES:** 0.80 Miles

| ROAD: | WIDTH | SURFACE | BASE | SUBGRADE |
|---|---|---|---|---|
| Cunard River Access Rd | 20' | 5" AC | 6" Aggregate base | Not applicable |

**BRIDGE:** None

**DESIGN DESIGNATION:**

| | |
|---|---|
| ADT (2027) | 457 |
| ADT (2047) | 679 |
| DHV | 102 |
| D | 55/45 |
| %Truck | 10.9% |
| V (MPH) | 20 |
| C/A | None |
| e(max) | 6% |

**SPECIFICATIONS:**

"Standard Specifications for Construction of Roads and Bridges on Federal Highway Projects", FP-24.

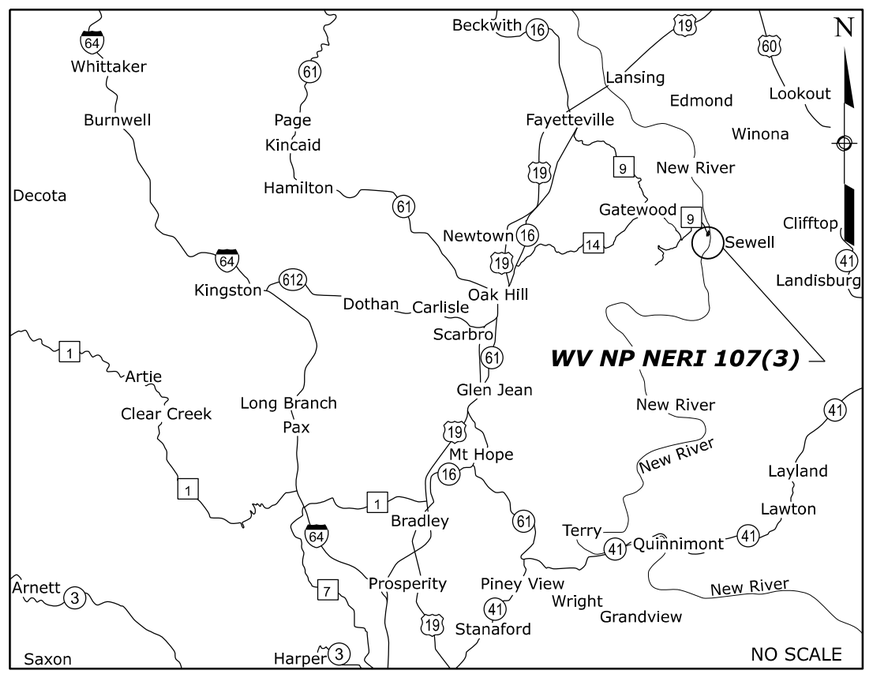


| Schedule | Description | Station to Station | Length (miles) | RIP Cycle |
|---|---|---|---|---|
| A | Cunard River Access Road (Route 107) | 100+93 to 121+90 | 0.40 | 6 |

Know what's below. Call before you dig.

PLANS PREPARED BY
**U.S. DEPARTMENT OF TRANSPORTATION**
**FEDERAL HIGHWAY ADMINISTRATION**
EASTERN FEDERAL LANDS HIGHWAY DIVISION
ASHBURN, VIRGINIA
FEBRUARY, 2026

| Project Manager | Highway Design Manager | Lead Designer |
|---|---|---|
| Katerina Roman-Gonzalez | Shoukat Nawaz | Damon L. Hassan |

M:\PROJECTS\neri\107(3)\HWY_DES\CADD\A01-WV_NP_NERI_107(3)_ttl.dgn [Title Sheet NPS]
23 February 2026 9:51 AM

| PROJECT | SHEET NUMBER |
|---|---|
| WV NP NERI 107(3) | A02 |

| | |
|---|---|
| Δ | total central angle |
| Δc | curve central angle |
| Ø | diameter |
| θs | spiral central angle |
| abut. | abutment |
| ACP | asphalt concrete pavement |
| ADT | average daily traffic |
| Agg | aggregate |
| AH | ahead |
| AMD | amendment |
| appr. | approach |
| ASC | aggregate surface course |
| Asph | asphalt |
| BK | back |
| BL | baseline |
| bldg. | building |
| BM | bench mark |
| BP | balance point |
| br. | bridge |
| brg. | bearing |
| BW | broken white |
| cc or c. to c. | center to center |
| CL | centerline |
| CMP | corrugated metal pipe |
| col. | column |
| conc. | concrete |
| conn. | connection |
| constr. jt. | construction joint |
| cont. | continuous |
| CS | curve to spiral |
| ctrs. | centers |
| D | directional distribution factor |
| DHV | design hourly volume |
| dia. | diameter |
| diag. | diagonal |
| diaph. | diaphragm |
| dist. | distance |
| drwg(s). | drawing(s) |
| DSY | double solid yellow |
| DW or DTW | dotted white |
| DY or DTY | dotted yellow |
| E | east |
| e | superelevation rate |
| elec. | electric |
| elev. | elevation |
| emb. | embankment |
| EOP | edge of pavement |
| EOS | edge of shoulder |
| EOT | edge of travel way |
| EQ or eq. | equation |
| ER | edge of road |
| ESAL | equivalent single axle load |
| EW | edge of water |
| ex. or exist. | existing |
| exc. | excavation |
| exp. jt. | expansion joint |
| fin. | finish |
| flg. | flange |
| ftg. | footing |
| ga. | gage (gauge) |
| GAB | graded aggregate base |
| galv. | galvanized |
| gnd or grnd | ground |
| hdwl. | headwall |
| hex. | hexagon |
| HLSD | headlight sight distance |
| HW | high water |
| ID | inside diameter |
| INF | infinite |
| inv. | invert |
| jt. | joint |
| K | K-Value |
| L | length of curve |
| lam. | lamination |
| lat. | latitude |
| LOD | Limits of Disturbance |
| long. | longitudinal |
| LPSM | lump sum |
| Ls | length of spiral |
| lt. or LT | left |
| LW | low water |
| ML | main line |
| MOD | modification |
| MP | mile post |
| max. | maximum |
| min. | minimum |
| mon. | monument |
| N | north |
| NC | normal crown |
| NMSA | nominal maximum size aggregate |
| No. | number |
| o. c. | on center |
| ohwm | ordinary high water mark |
| o. to o. | out to out |
| OD | outside diameter |
| OG | original ground |
| PC | point of curve |
| PCC | point of compound curve |
| PCS | point of curve to spiral |
| PGL | profile grade line |
| PI | point of intersection |
| pl. | plate |
| POB | point of beginning |
| POC | point on curve |
| POE | point of ending |
| POS | point on spiral |
| POT | point on tangent |
| prop. | proposed |
| PS | point of tangent to spiral |
| PSC | point of spiral to curve |
| PST | point of spiral to tangent |
| PT | point of tangent |
| pvmt. | pavement |
| R | radius |
| R. | range |
| R/W | right-of-way |
| rdwy. | roadway |
| RECP | rolled erosion control product |
| reinf. | reinforcement |
| reqd. | required |
| rt. or RT | right |
| rte. | route |
| S | south |
| SADT | seasonal average daily traffic |
| SC | point of spiral to curve |
| sec. | section |
| shldr. | shoulder |
| spa. | spacing, spaces or spaced |
| sqft | square foot |
| sqyd | square yard |
| SRS | point of spiral to reverse spiral |
| SS | point of spiral to spiral (no curve) |
| SSD | stopping sight distance |
| ST | point of spiral to tangent |
| Sta. | station |
| std. | standard |
| stgr. | stringer |
| stiff. | stiffener |
| struc. | structural |
| STS | point of spiral to tangent spiral |
| SW or SDW | solid white |
| sym. | symmetrical |
| S/W | sidewalk |
| T | tangent distance |
| T. | township |
| TBM | temporary bench mark |
| thd. | thread |
| traf. | traffic |
| TS | point of tangent to spiral |
| Ts | tangent distance (spiraled curve) |
| typ. | typical |
| V | design speed |
| VC | vertical curve |
| var. | varies |
| vph | vehicles per hour |
| VPI | vertical point of intersection |
| W | west |

| | |
|---|---|
| Control Point (Terrestrial and GPS); Jump Hub | RBAR 3000 / JH |
| National Boundary | |
| State Boundary | |
| County Boundary | |
| City Boundary | |
| Township or Range Line | |
| Section Line | |
| Section Corner (Found, Projected) | 36 31 1 6 / 36 31 1 6 |
| ¼ Section Line | |
| ¼ Section Corner (Found, Projected) | 15 22 / 15 22 |
| 1/16 Section Line | |
| 1/16 Section Corner (Found, Projected) | 1/16 SEC. / 1/16 SEC. |
| Property Line w/Found Property Corner | P/L P/L |
| Parcel Number | 00000 |
| National Park Boundary | NP NP |
| National Forest Boundary | |
| National Wildlife Refuge Boundary | NWR NWR NWR NWR |
| BLM Lands Boundary | |
| Indian Reservation Boundary | |
| Existing Roadway (Road, Paved, Gravel) | |
| Railroad | |
| Trail | |
| Intermittent Drainage or Small Creek | |
| Large Creek or River | |
| Lake, Pond or Reservoir | |
| Spring or Seep | |
| Treeline; Individual Trees | |
| Material Source; Bore Hole; Test Pit | BH TP |
| Spot Elevation; Coordinate Grid Tick | EL. 0.00 X N 0 E 1 |

| NO. | DATE | BY | REVISIONS |
|---|---|---|---|
| | | | |
| | | | |
| | | | |
| | | | |

U.S. DEPARTMENT OF TRANSPORTATION
FEDERAL HIGHWAY ADMINISTRATION
OFFICE OF FEDERAL LANDS HIGHWAY

NEW RIVER GORGE NATIONAL PARK AND PRESERVE

# SYMBOLS AND ABBREVIATIONS



C:\PROJECTS\nerf\107(3)\HWY_DES\CADD\A02-A03_WV_NP_NERI_107(3)_sym.dgn [SHEET 1]
19 May 2025 9:19 AM

| PROJECT | SHEET NUMBER |
|---|---|
| WV NP NERI 107(3) | A03 |

*North Arrow* N

| | | EXISTING | PROPOSED |
|---|---|---|---|
| *Slope Stake Limits* | *Top of Cut* | | |
| | *Toe of Fill* | | |
| | *Transition* | | |
| *Fence* | | | |
| *Gate with Fence* | | | |
| *Cattleguard* | | | |
| *Guardrail* | | | |
| *Concrete Barrier* | | | |
| *Retaining Wall* | | | |
| *Signs (single, double post; portable)* | | | |
| *Delineators* | | | |
| *Pipe Culvert (arrow shows flow)* | | | |
| *Pipe Culvert with End Section* | | | |
| *Pipe Culvert with Headwall* | | | |
| *Pipe Culvert with Drop Inlet* | | | DI |
| *Box Culvert* | | | |
| *Underdrain* | | UD | UD |
| *Overhead/Above Ground Utilities* | | P P | P P |
| *Underground Utilities* | | W W | W W |

*FM = force main, FO = fiber optic, G = gas, IRR = irrigation, O = oil,*
*P = power, SA = sanitary sewer, SD = storm drain, SS = storm sewer,*
*STEAM = steam, T = telephone, TV = CATV, W = water*

*Poles (Power, Telephone, Joint Use, Light, Support w/Anchor)*

*Miscellaneous Utility Features*
*EM = electric meter, T = telephone pedestal, TV = CATV pedestal,*
*UP = transformer or junction box, WF = water fountain*

| | | |
|---|---|---|
| *Building* | | |
| *Right-of-Way Line with Monument* | r/w | R/W |
| *Permanent Easement* | P/E | P/E |
| *Construction Easement* | | TCE |
| *Riprap* | | |

AREA PATTERN

*Pavement Removal / Roadway Obliteration*

*Full Depth Pavement*

*Sidewalk Asphalt/Concrete*

*Mill and Overlay*

*Overlay*

*Silt Fence* SF

*Diversion Berm* DB

*Drainage Divide*

*Check Dam*

*Limits of Disturbance* LOD LOD LOD

*Fiber Roll or Wattle*

PROJECT SPECIFIC SYMBOLS AND ABBREVIATIONS:

*Inlet Type 4D*

*Inlet Type 4D Modified*

*Portable Changeable Message Sign* PCMS

*Soil Boring* BH

*Roadway Excavation and Asphalt Concrete Pavement, 5-inch Depth*

*MGS* *Midwest Guardrail System*

| NO. | DATE | BY | REVISIONS |
|---|---|---|---|
| | | | |
| | | | |
| | | | |
| | | | |

U.S. DEPARTMENT OF TRANSPORTATION
FEDERAL HIGHWAY ADMINISTRATION
OFFICE OF FEDERAL LANDS HIGHWAY

NEW RIVER GORGE NATIONAL PARK AND PRESERVE

# SYMBOLS AND ABBREVIATIONS

*Sheet 2 of 2*

C:\PROJECTS\nerf\107(3)\HWY_DES\CADD\A02-A03_WV_NP_NERI_107(3)_sym.dgn [SHEET 2]
29 October 2025 7:49 AM

| PROJECT | SHEET NUMBER |
|---|---|
| WV NP NERI 107(3) | A04 |

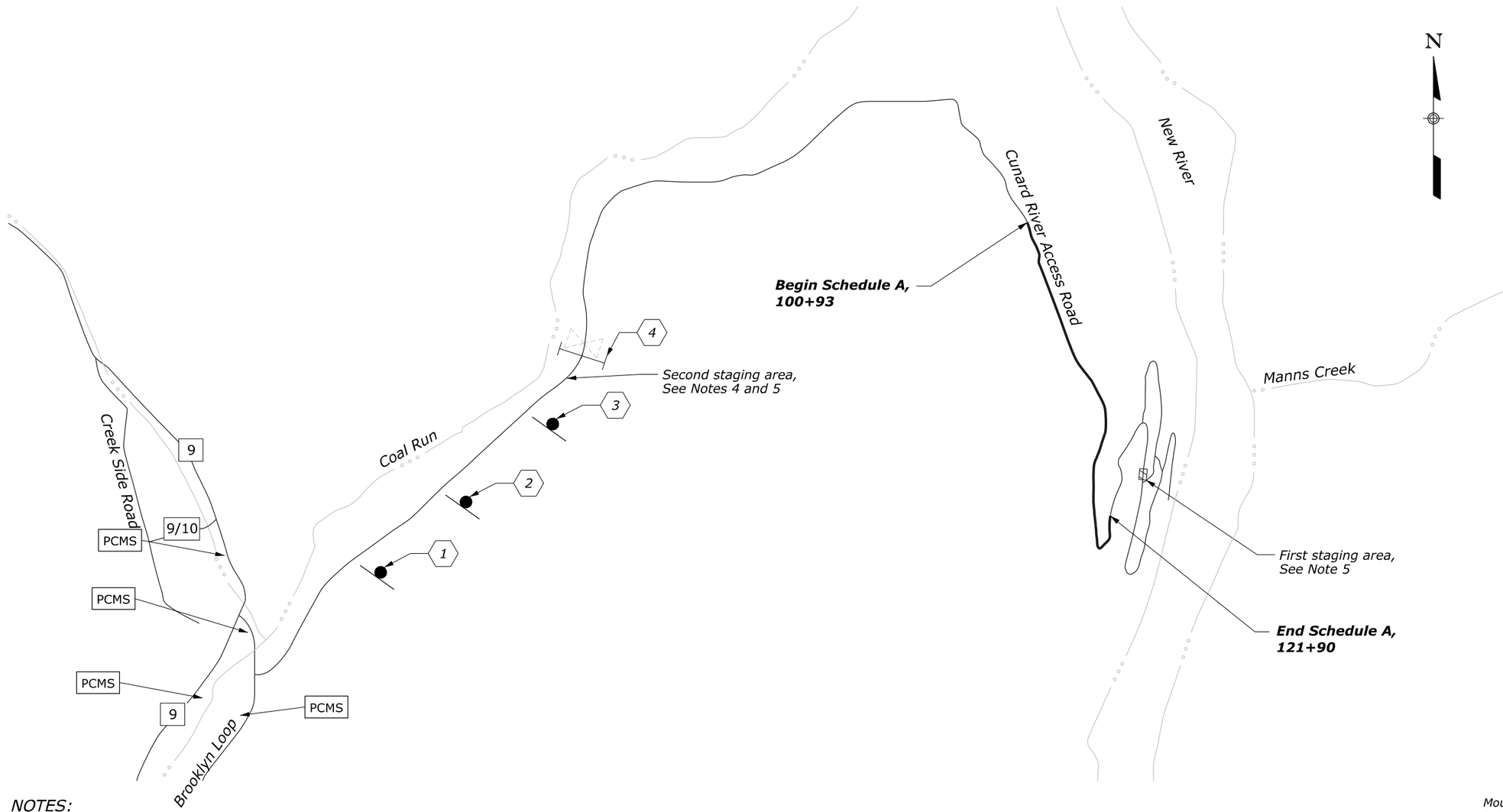


## NOTES:

1. Install temporary traffic control devices in accordance with the latest edition of the MUTCD. Final location and spacing of devices may change to fit field conditions as approved by the CO.
2. Use a full roadway closure on Cunard River Access Road when permissible according to Subsection 156.03. Install road closure signs 14 days prior to the full roadway closure. Contact John Dixon, County Administrator at 304-465-1250, at least 2 days in advance of work to inspect the temporary traffic control device setup.
3. Use lane closures with flaggers (see Standard 635-6) or temporary traffic signals (see Detail 635-9A) when full roadway closures are not permitted.
4. Keep two parking spaces open for trail users during the full roadway closure.
5. See Subsection 105.04 for areas designated for staging. Verify the limits of the staging areas before mobilization.

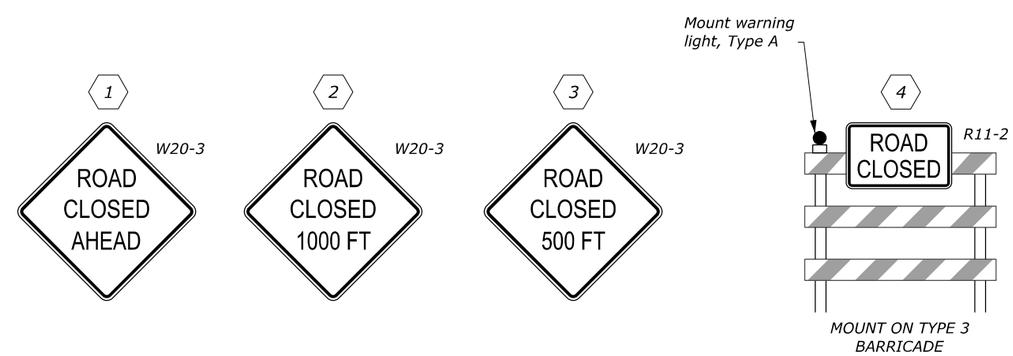


| NO. | DATE | BY | REVISIONS |
|---|---|---|---|
| | | | |
| | | | |
| | | | |
| | | | |

U.S. DEPARTMENT OF TRANSPORTATION
FEDERAL HIGHWAY ADMINISTRATION
OFFICE OF FEDERAL LANDS HIGHWAY

NO SCALE

NEW RIVER GORGE NATIONAL PARK AND PRESERVE

# LOCATION MAP & TEMPORARY TRAFFIC CONTROL PLAN

CUNARD RIVER ACCESS ROAD, SCHEDULE A

M:\PROJECTS\nerf\107(3)\HWY_DES\CADD\A04-WV_NP_NERI_107(3)_loc.dgn [Sheet]
10 February 2026 1:09 PM

| PROJECT | SHEET NUMBER |
|---|---|
| WV NP NERI 107(3) | A05 |

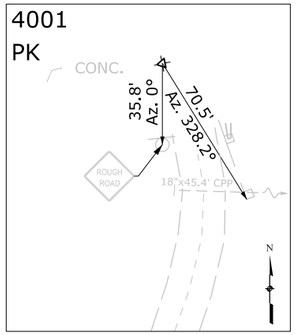


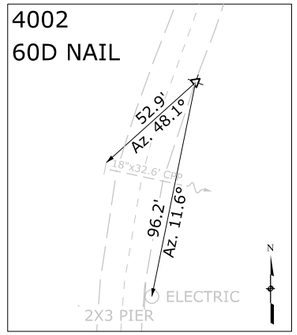


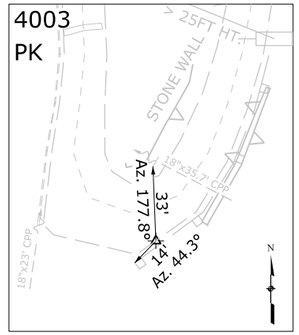


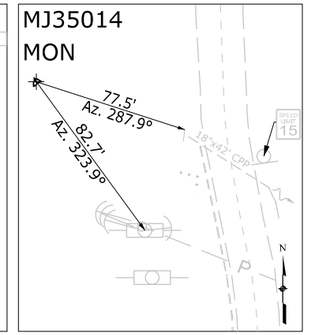


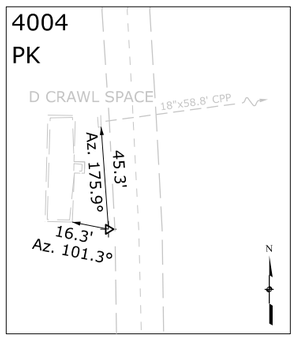


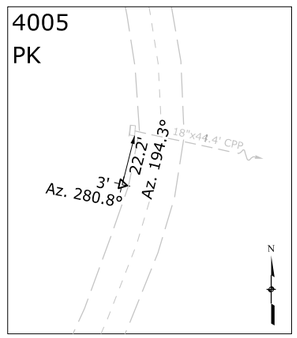


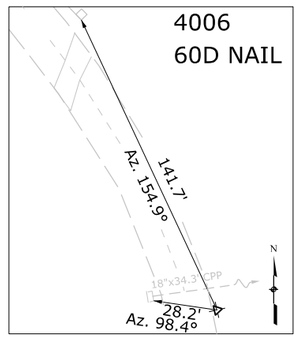


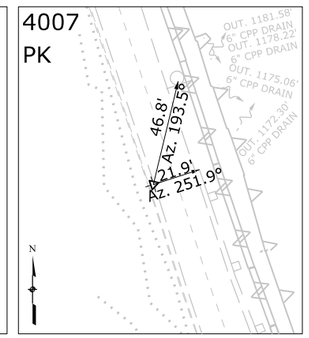


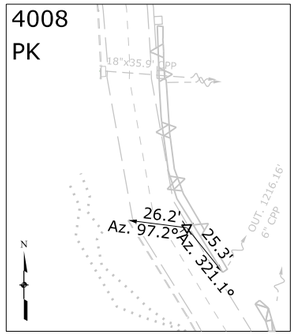


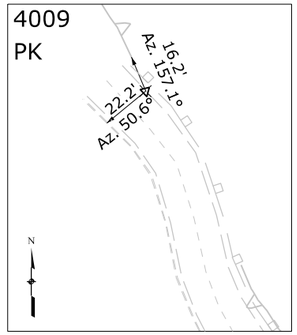


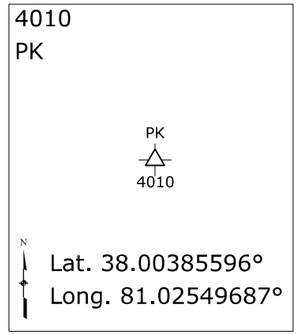


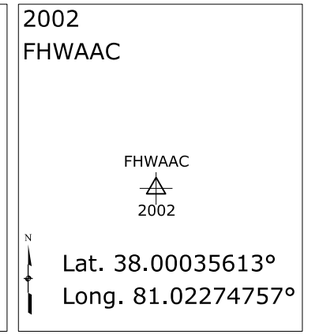


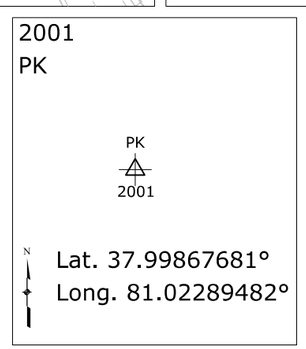


*NOTE:*
*Azimuth angle shown is based on north axis at clockwise rotation.*

PROJECT NAME: WV NP NERI 107(3)
PROJECT DESRCIPTION: New River Gorge National Park and Preserve

PROJECT COORDINATE SYSTEM
Coordinate System : US State Plane 1983
Zone : West Virginia South Zone 4702
Hor. Datum : NAD 1983 (Conus)
Vert. Datum : NAVD 1988 (Conus)
Geoid Model : GEIOD12B (Conus)
Units : International Foot

Survey Project Coordinate List

| NAME | NORTHING | EASTING | ELEV. | TYPE |
|---|---|---|---|---|
| 2001 | 363653.967 | 1961906.149 | 1013.381 | PKNAIL |
| 2002 | 364265.456 | 1961948.730 | 1056.297 | FHWAAC |
| 4001 | 364003.720 | 1961796.056 | 1065.777 | PKNAIL |
| 4002 | 363854.601 | 1961800.895 | 1065.400 | 60D |
| 4003 | 363566.232 | 1961720.702 | 1082.406 | PKNAIL |
| 4004 | 363850.047 | 1961657.878 | 1107.840 | PKNAIL |
| 4005 | 364172.172 | 1961718.378 | 1115.279 | PKNAIL |
| 4006 | 364326.197 | 1961727.020 | 1135.551 | 60D |
| 4007 | 364709.361 | 1961490.082 | 1193.717 | PKNAIL |
| 4008 | 364989.075 | 1961409.914 | 1222.514 | PKNAIL |
| 4009 | 365296.395 | 1961289.305 | 1258.357 | PKNAIL |
| 4010 | 365540.085 | 1961156.894 | 1284.220 | PKNAIL |

| NO. | DATE | BY | REVISIONS |
|---|---|---|---|
| | | | |
| | | | |
| | | | |
| | | | |

U.S. DEPARTMENT OF TRANSPORTATION
FEDERAL HIGHWAY ADMINISTRATION
OFFICE OF FEDERAL LANDS HIGHWAY

NO SCALE

NEW RIVER GORGE NATIONAL PARK AND PRESERVE

**SURVEY INFORMATION SHEET**

CUNARD RIVER ACCESS ROAD
SCHEDULE A

C:\PROJECTS\nerl\107(3)\HWY_DES\CADD\A05-WV_NP_NERI_107(3)_sur.dgn [Sheet]
9 May 2025 8:13 AM

```
* BENTLEY HORIZONTAL ALIGNMENT REVIEW
*
* Alignment name: Cunard River Access Road
* Alignment description:
* Alignment style: Alignment\Baseline
*
                                    STATION          NORTHING          EASTING
Element: Linear
         START(     START)        100+00.000        365301.062       1961272.225
            PC(        PC)        100+27.893        365280.233       1961290.778
     Tangential Direction:    S41°41'37.994"E
        Tangential Length:            27.893

Element: Circular
            PC(        PC)        100+27.893        365280.233       1961290.778
           HPI(       HPI)        100+49.963        365263.754       1961305.458
            CC(        CC)                          365223.695       1961227.307
            PT(        PT)        100+71.080        365242.214       1961310.266
                   Radius:            85.000
                    Delta:     29°06'37.531" Right
  Degree of Curvature(Arc):     67°24'23.993"
                   Length:            43.186
                  Tangent:            22.070
                    Chord:            42.723
         Middle Ordinate:              2.728
                 External:             2.818
        Tangent Direction:    S41°41'37.994"E
         Radial Direction:    S48°18'22.006"W
          Chord Direction:    S27°08'19.228"E
         Radial Direction:    S77°24'59.537"W
        Tangent Direction:    S12°35'00.463"E

Element: Linear
            PT(        PT)        100+71.080        365242.214       1961310.266
            PC(        PC)        100+92.988        365220.831       1961315.039
     Tangential Direction:    S12°35'00.463"E
        Tangential Length:            21.909

Element: Circular
            PC(        PC)        100+92.988        365220.831       1961315.039
           HPI(       HPI)        101+13.376        365200.933       1961319.481
            CC(        CC)                          365240.439       1961402.877
            PT(        PT)        101+33.088        365184.891       1961332.064
                   Radius:            90.000
                    Delta:     25°31'40.738" Left
  Degree of Curvature(Arc):     63°39'42.660"
                   Length:            40.099
                  Tangent:            20.388
                    Chord:            39.768
         Middle Ordinate:              2.224
                 External:             2.280
        Tangent Direction:    S12°35'00.463"E
         Radial Direction:    S77°24'59.537"W
          Chord Direction:    S25°20'50.832"E
         Radial Direction:    S51°53'18.799"W
        Tangent Direction:    S38°06'41.201"E

Element: Linear
            PT(        PT)        101+33.088        365184.891       1961332.064
            PC(        PC)        101+72.098        365154.198       1961356.141
     Tangential Direction:    S38°06'41.201"E
        Tangential Length:            39.010

Element: Circular
            PC(        PC)        101+72.098        365154.198       1961356.141
           HPI(       HPI)        102+12.962        365122.045       1961381.362
            CC(        CC)                          365073.962       1961253.855
            PT(        PT)        102+51.283        365081.246       1961383.651
                   Radius:           130.000
                    Delta:     34°53'58.854" Right
  Degree of Curvature(Arc):     44°04'24.918"
                   Length:            79.185
                  Tangent:            40.864
                    Chord:            77.967
         Middle Ordinate:              5.983
                 External:             6.271
        Tangent Direction:    S38°06'41.201"E
         Radial Direction:    S51°53'18.799"W
          Chord Direction:    S20°39'41.775"E
         Radial Direction:    S86°47'17.652"W
        Tangent Direction:    S03°12'42.348"E

Element: Linear
            PT(        PT)        102+51.283        365081.246       1961383.651
            PC(        PC)        102+86.570        365046.014       1961385.628
     Tangential Direction:    S03°12'42.348"E
        Tangential Length:            35.287

Element: Circular
            PC(        PC)        102+86.570        365046.014       1961385.628
           HPI(       HPI)        103+24.062        365008.581       1961387.729
            CC(        CC)                          365054.418       1961535.393
            PT(        PT)        103+60.048        364976.539       1961407.195
                   Radius:           150.000
                    Delta:     28°03'59.693" Left
  Degree of Curvature(Arc):     38°11'49.596"
                   Length:            73.478
                  Tangent:            37.492
                    Chord:            72.746
         Middle Ordinate:              4.477
                 External:             4.614
        Tangent Direction:    S03°12'42.348"E
         Radial Direction:    S86°47'17.652"W
          Chord Direction:    S17°14'42.194"E
         Radial Direction:    S58°43'17.959"W
        Tangent Direction:    S31°16'42.041"E

Element: Linear
            PT(        PT)        103+60.048        364976.539       1961407.195
            PC(        PC)        103+92.668        364948.660       1961424.130
     Tangential Direction:    S31°16'42.041"E
        Tangential Length:            32.619

Element: Circular
```

| | | | |
|---|---|---|---|
| PC( PC) | 103+92.668 | 364948.660 | 1961424.130 |
| HPI( HPI) | 104+07.228 | 364936.217 | 1961431.690 |
| CC( CC) | | 364896.741 | 1961338.665 |
| PT( PT) | 104+21.584 | 364922.134 | 1961435.387 |
| Radius: | 100.000 | | |
| Delta: | 16°34'04.998" Right | | |
| Degree of Curvature(Arc): | 57°17'44.394" | | |
| Length: | 28.917 | | |
| Tangent: | 14.560 | | |
| Chord: | 28.816 | | |
| Middle Ordinate: | 1.043 | | |
| External: | 1.054 | | |
| Tangent Direction: | S31°16'42.041"E | | |
| Radial Direction: | S58°43'17.959"W | | |
| Chord Direction: | S22°59'39.542"E | | |
| Radial Direction: | S75°17'22.957"W | | |
| Tangent Direction: | S14°42'37.043"E | | |

Element: Linear

| | | | |
|---|---|---|---|
| PT( PT) | 104+21.584 | 364922.134 | 1961435.387 |
| PC( PC) | 104+78.869 | 364866.727 | 1961449.933 |
| Tangential Direction: | S14°42'37.043"E | | |
| Tangential Length: | 57.284 | | |

Element: Circular

| | | | |
|---|---|---|---|
| PC( PC) | 104+78.869 | 364866.727 | 1961449.933 |
| HPI( HPI) | 104+99.459 | 364846.812 | 1961455.162 |
| CC( CC) | | 365031.783 | 1962078.629 |
| PT( PT) | 105+20.035 | 364827.268 | 1961461.640 |
| Radius: | 650.001 | | |
| Delta: | 03°37'43.278" Left | | |
| Degree of Curvature(Arc): | 08°48'52.984" | | |
| Length: | 41.166 | | |
| Tangent: | 20.590 | | |
| Chord: | 41.159 | | |
| Middle Ordinate: | 0.326 | | |
| External: | 0.326 | | |
| Tangent Direction: | S14°42'37.043"E | | |
| Radial Direction: | S75°17'22.957"W | | |
| Chord Direction: | S16°31'28.682"E | | |
| Radial Direction: | S71°39'39.679"W | | |
| Tangent Direction: | S18°20'20.321"E | | |

Element: Linear

| | | | |
|---|---|---|---|
| PT( PT) | 105+20.035 | 364827.268 | 1961461.640 |
| PC( PC) | 107+07.445 | 364649.376 | 1961520.607 |
| Tangential Direction: | S18°20'20.321"E | | |
| Tangential Length: | 187.410 | | |

Element: Circular

| | | | |
|---|---|---|---|
| PC( PC) | 107+07.445 | 364649.376 | 1961520.607 |
| HPI( HPI) | 108+00.134 | 364561.395 | 1961549.770 |
| CC( CC) | | 364787.817 | 1961938.261 |
| PT( PT) | 108+90.151 | 364492.655 | 1961611.948 |
| Radius: | 440.001 | | |
| Delta: | 23°47'29.518" Left | | |
| Degree of Curvature(Arc): | 13°01'18.271" | | |
| Length: | 182.706 | | |
| Tangent: | 92.689 | | |
| Chord: | 181.396 | | |
| Middle Ordinate: | 9.449 | | |
| External: | 9.657 | | |
| Tangent Direction: | S18°20'20.321"E | | |
| Radial Direction: | S71°39'39.679"W | | |
| Chord Direction: | S30°14'05.079"E | | |
| Radial Direction: | S47°52'10.162"W | | |
| Tangent Direction: | S42°07'49.838"E | | |

Element: Linear

| | | | |
|---|---|---|---|
| PT( PT) | 108+90.151 | 364492.655 | 1961611.948 |
| PC( PC) | 109+30.927 | 364462.415 | 1961639.301 |
| Tangential Direction: | S42°07'49.838"E | | |
| Tangential Length: | 40.775 | | |

Element: Circular

| | | | |
|---|---|---|---|
| PC( PC) | 109+30.927 | 364462.415 | 1961639.301 |
| HPI( HPI) | 110+28.200 | 364390.276 | 1961704.554 |
| CC( CC) | | 364234.335 | 1961387.150 |
| PT( PT) | 111+20.412 | 364294.539 | 1961721.778 |
| Radius: | 340.001 | | |
| Delta: | 31°55'53.050" Right | | |
| Degree of Curvature(Arc): | 16°51'05.998" | | |
| Length: | 189.485 | | |
| Tangent: | 97.273 | | |
| Chord: | 187.042 | | |
| Middle Ordinate: | 13.115 | | |
| External: | 13.641 | | |
| Tangent Direction: | S42°07'49.838"E | | |
| Radial Direction: | S47°52'10.162"W | | |
| Chord Direction: | S26°09'53.313"E | | |
| Radial Direction: | S79°48'03.212"W | | |
| Tangent Direction: | S10°11'56.788"E | | |

Element: Linear

| | | | |
|---|---|---|---|
| PT( PT) | 111+20.412 | 364294.539 | 1961721.778 |
| PC( PC) | 111+82.394 | 364233.537 | 1961732.753 |
| Tangential Direction: | S10°11'56.788"E | | |
| Tangential Length: | 61.982 | | |

Element: Circular

| | | | |
|---|---|---|---|
| PC( PC) | 111+82.394 | 364233.537 | 1961732.753 |
| HPI( HPI) | 112+30.632 | 364186.060 | 1961741.295 |
| CC( CC) | | 364204.320 | 1961570.360 |
| PT( PT) | 112+76.255 | 364141.459 | 1961722.917 |
| Radius: | 165.000 | | |
| Delta: | 32°35'35.080" Right | | |
| Degree of Curvature(Arc): | 34°43'28.723" | | |
| Length: | 93.862 | | |
| Tangent: | 48.239 | | |
| Chord: | 92.601 | | |
| Middle Ordinate: | 6.629 | | |
| External: | 6.907 | | |
| Tangent Direction: | S10°11'56.788"E | | |
| Radial Direction: | S79°48'03.212"W | | |

```
          Chord Direction:     S06°05'50.752"W
         Radial Direction:     N67°36'21.708"W
        Tangent Direction:     S22°23'38.292"W

Element: Linear
            PT(        PT)          112+76.255          364141.459         1961722.917
            PC(        PC)          113+55.879          364067.840         1961692.583
     Tangential Direction:     S22°23'38.292"W
        Tangential Length:              79.624

Element: Circular
            PC(        PC)          113+55.879          364067.840         1961692.583
           HPI(       HPI)          114+29.567          363999.710         1961664.510
            CC(        CC)                              363940.214         1962002.320
            PT(        PT)          115+00.944          363926.088         1961667.617
                    Radius:             335.001
                     Delta:       24°48'38.798" Left
  Degree of Curvature(Arc):       17°06'11.461"
                    Length:             145.065
                   Tangent:              73.688
                     Chord:             143.934
          Middle Ordinate:                7.822
                  External:               8.009
        Tangent Direction:     S22°23'38.292"W
         Radial Direction:     N67°36'21.708"W
          Chord Direction:     S09°59'18.893"W
         Radial Direction:     S87°34'59.494"W
        Tangent Direction:     S02°25'00.506"E

Element: Linear
            PT(        PT)          115+00.944          363926.088         1961667.617
            PC(        PC)          116+59.926          363767.247         1961674.321
     Tangential Direction:     S02°25'00.506"E
        Tangential Length:             158.982

Element: Circular
            PC(        PC)          116+59.926          363767.247         1961674.321
           HPI(       HPI)          116+86.184          363741.013         1961675.428
            CC(        CC)                              363778.211         1961934.090
           PRC(       PRC)          117+12.264          363715.530         1961681.758
                    Radius:             260.001
                     Delta:       11°32'01.091" Left
  Degree of Curvature(Arc):       22°02'12.459"
                    Length:              52.338
                   Tangent:              26.258
                     Chord:              52.250
          Middle Ordinate:                1.316
                  External:               1.323
        Tangent Direction:     S02°25'00.506"E
         Radial Direction:     S87°34'59.494"W
          Chord Direction:     S08°11'01.051"E
         Radial Direction:     S76°02'58.404"W
        Tangent Direction:     S13°57'01.596"E

Element: Circular
           PRC(       PRC)          117+12.264          363715.530         1961681.758
           HPI(       HPI)          117+68.362          363661.087         1961695.283
            CC(        CC)                              363655.259         1961439.132
           PRC(       PRC)          118+22.631          363606.085         1961684.248
                    Radius:             250.001
                     Delta:       25°17'39.324" Right
  Degree of Curvature(Arc):       22°55'05.757"
                    Length:             110.367
                   Tangent:              56.098
                     Chord:             109.473
          Middle Ordinate:                6.066
                  External:               6.217
        Tangent Direction:     S13°57'01.596"E
         Radial Direction:     S76°02'58.404"W
          Chord Direction:     S01°18'11.934"E
         Radial Direction:     N78°39'22.272"W
        Tangent Direction:     S11°20'37.728"W

Element: Circular
           PRC(       PRC)          118+22.631          363606.085         1961684.248
           HPI(       HPI)          119+24.243          363506.458         1961664.262
            CC(        CC)                              363601.167         1961708.760
           PCC(       PCC)          118+89.109          363585.438         1961728.192
                    Radius:              25.000
                     Delta:      152°21'19.926" Left
  Degree of Curvature(Arc):      229°10'57.575"
                    Length:              66.478
                   Tangent:             101.612
                     Chord:              48.552
          Middle Ordinate:               19.027
                  External:              79.642
        Tangent Direction:     S11°20'37.728"W
         Radial Direction:     N78°39'22.272"W
          Chord Direction:     S64°50'02.235"E
         Radial Direction:     S51°00'42.198"E
        Tangent Direction:     N38°59'17.802"E

Element: Circular
           PCC(       PCC)          118+89.109          363585.438         1961728.192
           HPI(       HPI)          119+38.890          363624.132         1961759.512
            CC(        CC)                              363685.003         1961605.188
            PT(        PT)          119+85.569          363673.788         1961763.040
                    Radius:             158.250
                     Delta:       34°55'27.096" Left
  Degree of Curvature(Arc):       36°12'20.736"
                    Length:              96.460
                   Tangent:              49.781
                     Chord:              94.974
          Middle Ordinate:                7.293
                  External:               7.645
        Tangent Direction:     N38°59'17.802"E
         Radial Direction:     S51°00'42.198"E
          Chord Direction:     N21°31'34.254"E
         Radial Direction:     S85°56'09.295"E
        Tangent Direction:     N04°03'50.705"E

Element: Linear
            PT(        PT)          119+85.569          363673.788         1961763.040
            PC(        PC)          120+67.396          363755.408         1961768.840
```

```
      Tangential Direction:     N04°03'50.705"E
         Tangential Length:              81.826

Element: Circular
             PC(        PC)          120+67.396          363755.408         1961768.840
            HPI(       HPI)          121+18.014          363805.900         1961772.427
             CC(        CC)                              363729.540         1962132.923
             PT(        PT)          121+67.991          363853.509         1961789.619
                    Radius:             365.001
                     Delta:       15°47'27.135" Right
  Degree of Curvature(Arc):       15°41'50.793"
                    Length:             100.595
                   Tangent:              50.618
                     Chord:             100.277
           Middle Ordinate:               3.460
                  External:               3.493
         Tangent Direction:     N04°03'50.705"E
          Radial Direction:     S85°56'09.295"E
           Chord Direction:     N11°57'34.273"E
          Radial Direction:     S70°08'42.160"E
         Tangent Direction:     N19°51'17.840"E

Element: Linear
             PT(        PT)          121+67.991          363853.509         1961789.619
             PC(        PC)          122+20.796          363903.175         1961807.554
      Tangential Direction:     N19°51'17.840"E
         Tangential Length:              52.805

Element: Circular
             PC(        PC)          122+20.796          363903.175         1961807.554
            HPI(       HPI)          122+57.583          363937.776         1961820.048
             CC(        CC)                              363942.234         1961699.390
             PT(        PT)          122+92.005          363973.204         1961810.142
                    Radius:             115.000
                     Delta:       35°28'39.391" Left
  Degree of Curvature(Arc):       49°49'20.342"
                    Length:              71.208
                   Tangent:              36.787
                     Chord:              70.076
           Middle Ordinate:               5.468
                  External:               5.741
         Tangent Direction:     N19°51'17.840"E
          Radial Direction:     S70°08'42.160"E
           Chord Direction:     N02°06'58.145"E
          Radial Direction:     N74°22'38.449"E
         Tangent Direction:     N15°37'21.551"W

Element: Linear
             PT(        PT)          122+92.005          363973.204         1961810.142
            END(       END)          122+96.842          363977.862         1961808.839
      Tangential Direction:     N15°37'21.551"W
         Tangential Length:               4.837
```

**SCHEDULE A**

| Left Lane | | | | Right Lane | | | |
|---|---|---|---|---|---|---|---|
| Start Station | End Station | Cross slope (%) | | Start Station | End Station | Cross slope (%) | |
| 112+60 | | 3.1 | Existing | 112+60 | | -7.9 | Existing |
| 112+60 | 113+37 | Transition | | 112+60 | 114+39 | Transition | |
| 113+37 | 113+46 | -2.0 | | 114+39 | 114+81 | 4.0 | |
| 113+46 | 113+76 | Transition | | 114+81 | 115+71 | Transition | |
| 113+76 | 114+81 | -4.0 | | 115+71 | 116+78 | -2.0 | |
| 114+81 | 115+11 | Transition | | 116+78 | 117+00 | Transition | |
| 115+11 | 116+90 | -2.0 | | 117+00 | | -0.5 | Existing |
| 116+90 | 117+00 | Transition | | | | | |
| 117+00 | | -1.3 | Existing | | | | |

| PROJECT | SHEET NUMBER |
|---|---|
| WV NP NERI 107(3) | B01 |

*NOTE:*
*Protect the curb and gutter during roadway excavation.*

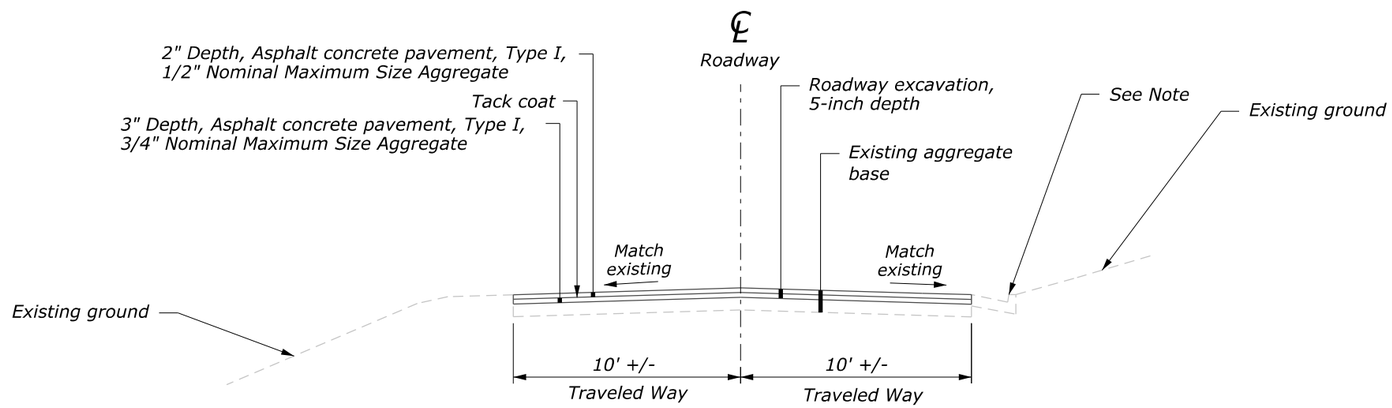

**100+93 to 105+86, 107+68 to 110+40, 117+50 to 118+00, 119+30 to 119+65, and 121+40 to 121+90**

| NO. | DATE | BY | REVISIONS |
|---|---|---|---|
| | | | |
| | | | |
| | | | |
| | | | |

U.S. DEPARTMENT OF TRANSPORTATION
FEDERAL HIGHWAY ADMINISTRATION
OFFICE OF FEDERAL LANDS HIGHWAY

NO SCALE

NEW RIVER GORGE NATIONAL PARK AND PRESERVE

**TYPICAL SECTION**

CUNARD RIVER ACCESS ROAD

SCHEDULE A

M:\PROJECTS\nerf\107(3)\HWY_DES\CADD\B01-B04-WV_NP_NERI_107(3)_typ.dgn [Sheet Model 1]
9 February 2026 11:36 AM

| PROJECT | SHEET NUMBER |
|---|---|
| WV NP NERI 107(3) | B02 |

*NOTE:*
*Protect the curb and gutter during asphalt pavement milling.*

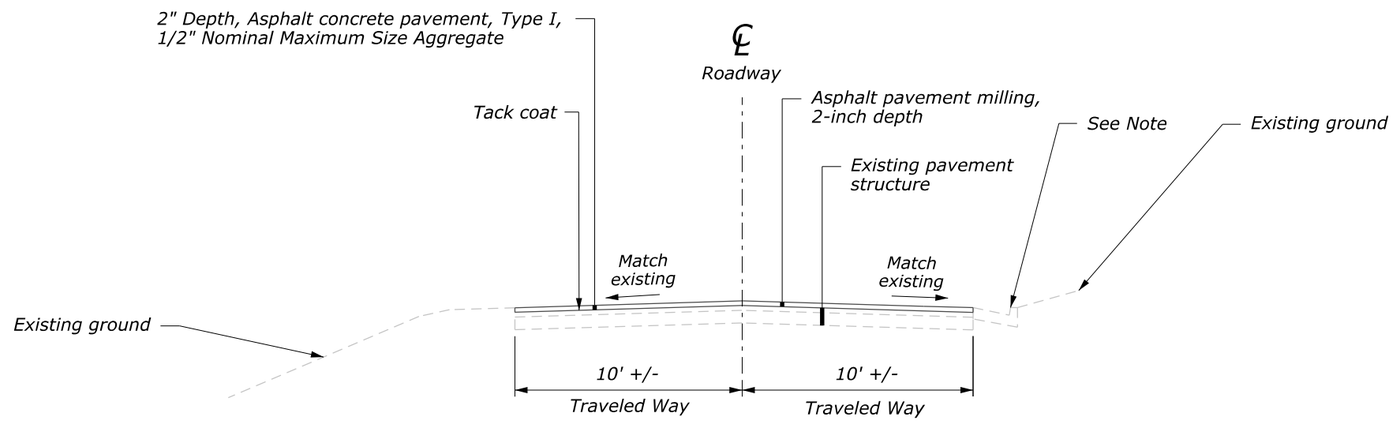

**105+86 to 107+68, 110+40 to 112+60, 117+00 to 117+50, 118+00 to 119+30, and 119+65 to 121+40**

| NO. | DATE | BY | REVISIONS |
|---|---|---|---|
| | | | |
| | | | |
| | | | |
| | | | |

U.S. DEPARTMENT OF TRANSPORTATION
FEDERAL HIGHWAY ADMINISTRATION
OFFICE OF FEDERAL LANDS HIGHWAY

NO SCALE

NEW RIVER GORGE NATIONAL PARK AND PRESERVE

# TYPICAL SECTION

CUNARD RIVER ACCESS ROAD
SCHEDULE A

M:\PROJECTS\nerf\107(3)\HWY_DES\CADD\B01-B04-WV_NP_NERI_107(3)_typ.dgn [Sheet Model 2]
9 February 2026 11:36 AM

| PROJECT | SHEET NUMBER |
|---|---|
| WV NP NERI 107(3) | B03 |

## NOTES:

1. See the Standards and Details for more information.
2. See the Superelevation Tables Sheet for pavement cross slopes.

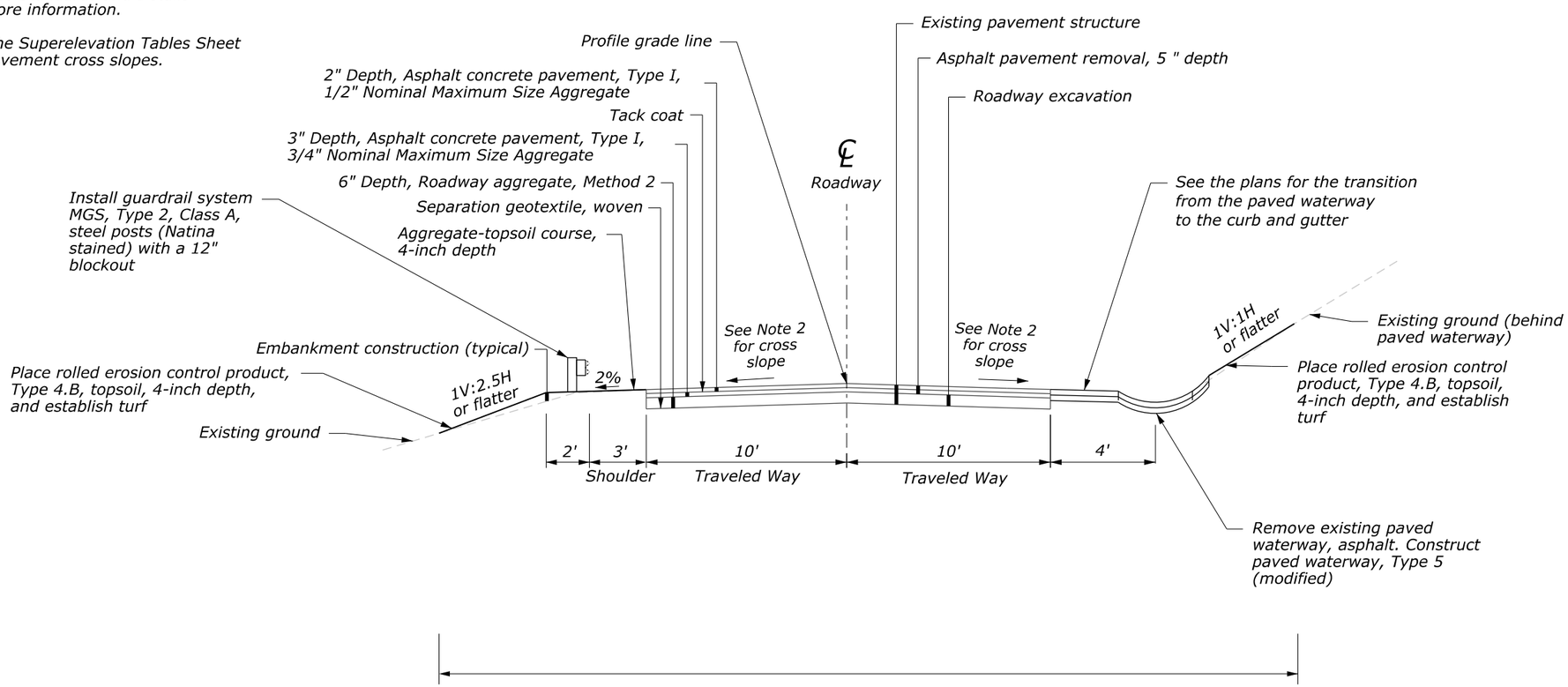


**112+60 to 113+19 and 116+17 to 117+00**
**Reconstruction Areas**

| NO. | DATE | BY | REVISIONS |
|---|---|---|---|
| | | | |
| | | | |
| | | | |
| | | | |

U.S. DEPARTMENT OF TRANSPORTATION
FEDERAL HIGHWAY ADMINISTRATION
OFFICE OF FEDERAL LANDS HIGHWAY

NO SCALE

NEW RIVER GORGE NATIONAL PARK AND PRESERVE

# TYPICAL SECTION

CUNARD RIVER ACCESS ROAD
SCHEDULE A

M:\PROJECTS\nerl\107(3)\HWY_DES\CADD\B01-B04-WV_NP_NERI_107(3)_typ.dgn [Sheet Model 3]
9 February 2026 11:37 AM

| PROJECT | SHEET NUMBER |
|---|---|
| WV NP NERI 107(3) | B04 |

## NOTES:

1. See the Standards and Details for more information.
2. See the Superelevation Tables Sheet for pavement cross slopes.
3. Place riprap, Class 2 in areas where the sideslope is steeper than 1V:2H.

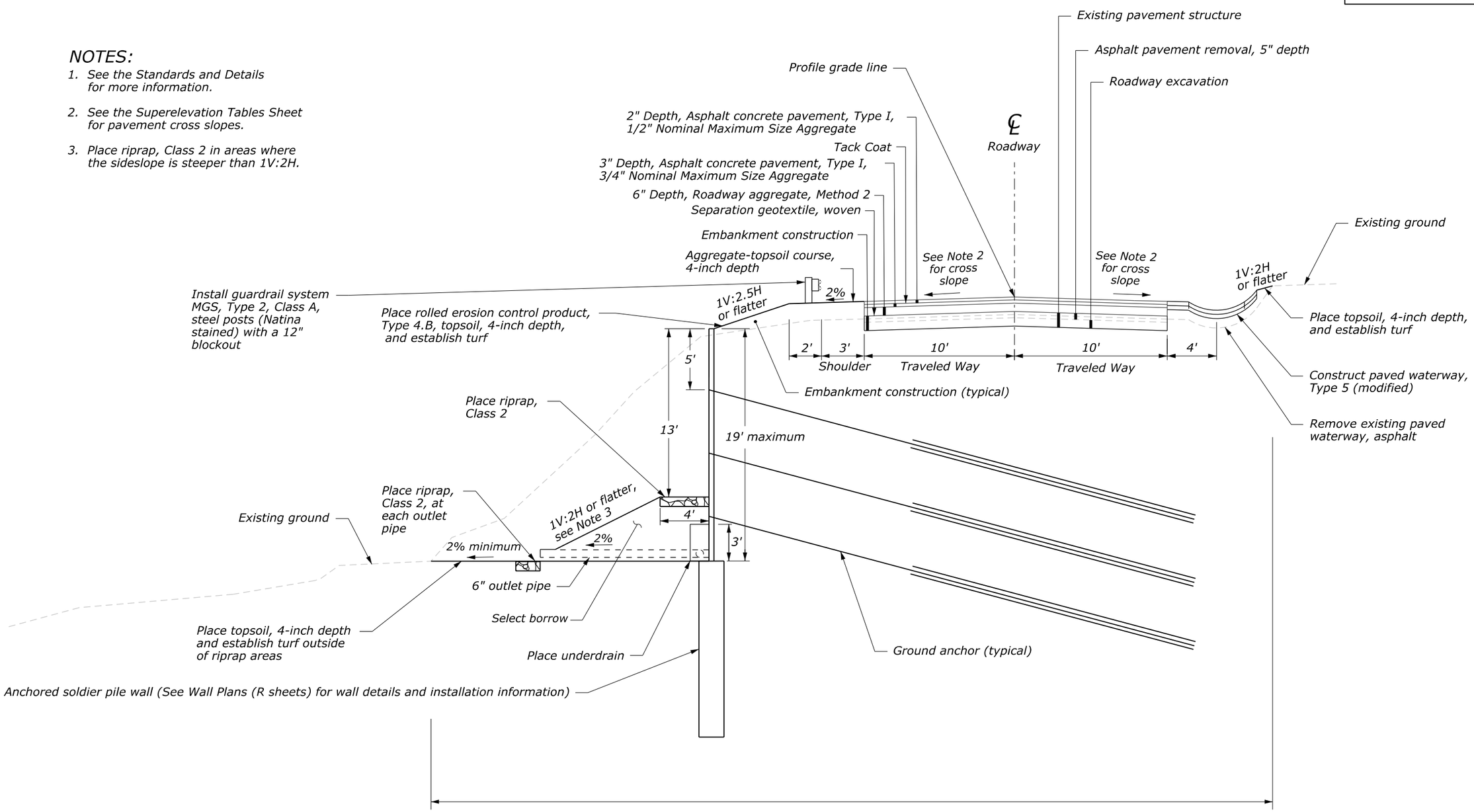


**113+19 to 116+17**
**Reconstruction Area**

| NO. | DATE | BY | REVISIONS |
|---|---|---|---|
| | | | |
| | | | |
| | | | |
| | | | |

U.S. DEPARTMENT OF TRANSPORTATION
FEDERAL HIGHWAY ADMINISTRATION
OFFICE OF FEDERAL LANDS HIGHWAY

NO SCALE

NEW RIVER GORGE NATIONAL PARK AND PRESERVE

**TYPICAL SECTION**

CUNARD RIVER ACCESS ROAD

SCHEDULE A

M:\PROJECTS\nerf\107(3)\HWY_DES\CADD\B01-B04-WV_NP_NERI_107(3)_typ.dgn [Sheet Model 4]
9 February 2026 11:41 AM

| PROJECT | SHEET NUMBER |
|---|---|
| WV NP NERI 107(3) | C01 |

| Line Item No. | Pay Item No. | Pay Item Description | Unit | Estimated Quantities |
|---|---|---|---|---|
| | | | | Bid Schedule |
| A0100 | 15101-0000 | MOBILIZATION | LPSM | ALL |
| A0120 | 15201-0000 | CONSTRUCTION SURVEY AND STAKING | LPSM | ALL |
| A0140 | 15401-0000 | CONTRACTOR TESTING | LPSM | ALL |
| A0160 | 15705-1400 | SOIL EROSION CONTROL, FIBER ROLL | LNFT | 430 |
| A0180 | 15706-0400 | SOIL EROSION CONTROL, SEDIMENT TRAP | EACH | 1 |
| A0200 | 15706-1000 | SOIL EROSION CONTROL, INLET PROTECTION | EACH | 3 |
| A0220 | 15706-1600 | SOIL EROSION CONTROL, STABILIZED CONSTRUCTION EXIT | EACH | 1 |
| A0240 | 20103-0000 | CLEARING AND GRUBBING | SQYD | 3,250 |
| A0260 | 20301-1400 | REMOVAL OF INLET | EACH | 3 |
| A0280 | 20301-2400 | REMOVAL OF SIGN | EACH | 12 |
| A0300 | 20301-3400 | REMOVAL OF WHEELSTOP | EACH | 9 |
| A0320 | 20302-0300 | REMOVAL OF CURB AND GUTTER, CONCRETE | LNFT | 21 |
| A0340 | 20302-1600 | REMOVAL OF PAVED WATERWAY | LNFT | 430 |
| A0360 | 20302-2100 | REMOVAL OF PIPE CULVERT | LNFT | 145 |
| A0380 | 20303-1600 | REMOVAL OF PAVEMENT, ASPHALT | SQYD | 1,080 |
| A0400 | 20401-0000 | ROADWAY EXCAVATION | CUYD | 7,470 |
| A0420 | 20411-0000 | SELECT BORROW | TON | 2,250 |
| A0440 | 20701-1000 | SEPARATION GEOTEXTILE, WOVEN | SQYD | 1,080 |
| A0460 | 20703-1200 | GEOTEXTILE FILTER, CLASS 1, NON-WOVEN | SQYD | 935 |
| A0480 | 25102-0200 | PLACED RIPRAP, CLASS 2 | TON | 365 |
| A0500 | 25402-1000 | LAGGING, TIMBER | SQFT | 4,540 |
| A0520 | 25402-2000 | LAGGING, CONCRETE,(PRECAST CONCRETE PANELS) | SQFT | 4,540 |
| A0540 | 25411-0000 | STRUCTURAL STEEL SOLDIER PILE,(STEEL H-PILE, 16 X 88, IN PLACE) | LNFT | 2,260 |
| A0560 | 25602-0000 | GROUND ANCHOR | LNFT | 7,350 |
| A0580 | 25605-0000 | PERFORMANCE TEST | EACH | 8 |

| NO. | DATE | BY | REVISIONS |
|---|---|---|---|
| | | | |
| | | | |
| | | | |
| | | | |

U.S. DEPARTMENT OF TRANSPORTATION
FEDERAL HIGHWAY ADMINISTRATION
OFFICE OF FEDERAL LANDS HIGHWAY

NEW RIVER GORGE NATIONAL PARK AND PRESERVE

# TABULATION OF QUANTITIES

CUNARD RIVER ACCESS ROAD

SCHEDULE A



M:\PROJECTS\nerf\107(3)\HWY_DES\CADD\C01-C05-WV_NP_NERI_107(3)_qnt.dgn [Tabulation of Quantities - Sheet 1]
9 February 2026 1:20 PM

| PROJECT | SHEET NUMBER |
|---|---|
| WV NP NERI 107(3) | C02 |

| Line Item No. | Pay Item No. | Pay Item Description | Unit | Estimated Quantities |
|---|---|---|---|---|
| | | | | Bid Schedule |
| A0600 | 30202-2000 | ROADWAY AGGREGATE, METHOD 2 | TON | 340 |
| A0620 | 31302-0400 | AGGREGATE-TOPSOIL COURSE, 4-INCH DEPTH | SQYD | 155 |
| A0640 | 40301-0100 | ASPHALT CONCRETE PAVEMENT, TYPE 1,(1/2-INCH NOMINAL MAXIMUM SIZE AGGREGATE) | TON | 620 |
| A0660 | 40301-0100 | ASPHALT CONCRETE PAVEMENT, TYPE 1,(3/4-INCH NOMINAL MAXIMUM SIZE AGGREGATE) | TON | 535 |
| A0680 | 41202-0000 | TACK COAT | GAL | 860 |
| A0700 | 41301-0600 | ASPHALT PAVEMENT MILLING, 2-INCH DEPTH | SQYD | 2,300 |
| A0720 | 56501-0300 | DRILLED SHAFT, 30-INCH DIAMETER,(FLOWABLE BACKFILL DRILLED SHAFT) | LNFT | 120 |
| A0740 | 56501-0300 | DRILLED SHAFT, 30-INCH DIAMETER,(ROCK EMBEDMENT) | LNFT | 505 |
| A0760 | 56501-0300 | DRILLED SHAFT, 30-INCH DIAMETER,(SOIL EMBEDMENT) | LNFT | 825 |
| A0780 | 60201-0800 | 24-INCH PIPE CULVERT | LNFT | 75 |
| A0800 | 60210-0800 | END SECTION FOR 24-INCH PIPE CULVERT | EACH | 2 |
| A0820 | 60403-1100 | INLET, FLH TYPE 4D | EACH | 1 |
| A0840 | 60403-1100 | INLET, FLH TYPE 4D,(MODIFIED) | EACH | 1 |
| A0860 | 60510-0700 | 6-INCH COLLECTOR PIPE,(PERFORATED) | LNFT | 300 |
| A0880 | 60510-0800 | 6-INCH OUTLET PIPE | LNFT | 110 |
| A0900 | 60520-0000 | UNDERDRAIN BACKFILL,(AASHTO NO. 67 STONE) | CUYD | 125 |
| A0920 | 60703-0000 | CLEANING CULVERTS IN PLACE | LNFT | 25 |
| A0940 | 60802-0500 | PAVED WATERWAY, TYPE 5,(MODIFIED) | LNFT | 420 |
| A0960 | 60902-1100 | CURB AND GUTTER, CONCRETE, 13-INCH DEPTH | LNFT | 50 |
| A0980 | 60915-1000 | WHEELSTOP, CONCRETE | EACH | 9 |
| A1000 | 61701-4500 | GUARDRAIL SYSTEM MGS, TYPE 2, CLASS A, STEEL POSTS,(NATINA STAINED) | LNFT | 350 |
| A1020 | 61702-1500 | TERMINAL SYSTEM, TYPE MGS TANGENT,(NATINA STAINED) | EACH | 2 |
| A1040 | 62401-0300 | PROVIDING AND PLACING TOPSOIL, 4-INCH DEPTH | SQYD | 3,240 |
| A1060 | 62501-0000 | TURF ESTABLISHMENT | ACRE | 0.7 |
| A1080 | 62901-1100 | ROLLED EROSION CONTROL PRODUCT, TYPE 4.B | SQYD | 845 |
| A1100 | 63401-1500 | PAVEMENT MARKINGS, TYPE H, SOLID | LNFT | 8,980 |

| NO. | DATE | BY | REVISIONS |
|---|---|---|---|
| | | | |
| | | | |
| | | | |
| | | | |

U.S. DEPARTMENT OF TRANSPORTATION
FEDERAL HIGHWAY ADMINISTRATION
OFFICE OF FEDERAL LANDS HIGHWAY

NEW RIVER GORGE NATIONAL PARK AND PRESERVE

# TABULATION OF QUANTITIES

CUNARD RIVER ACCESS ROAD

SCHEDULE A



M:\PROJECTS\neri\107(3)\HWY_DES\CADD\C01-C05-WV_NP_NERI_107(3)_qnt.dgn [Tabulation of Quantities - Sheet 2]
19 February 2026 11:55 AM

| PROJECT | SHEET NUMBER |
|---|---|
| WV NP NERI 107(3) | C03 |

| Line Item No. | Pay Item No. | Pay Item Description | Unit | Estimated Quantities |
|---|---|---|---|---|
| | | | | Bid Schedule |
| A1120 | 63501-0000 | TEMPORARY TRAFFIC CONTROL | LPSM | ALL |
| A1140 | 63701-0000 | FIELD OFFICE | EACH | 1 |

M:\PROJECTS\nerl\107(3)\HWY_DES\CADD\C01-C05-WV_NP_NERI_107(3)_qnt.dgn [Tabulation of Quantities - Sheet 3]
9 February 2026 12:00 PM

| NO. | DATE | BY | REVISIONS |
|---|---|---|---|
| | | | |
| | | | |
| | | | |
| | | | |

U.S. DEPARTMENT OF TRANSPORTATION
FEDERAL HIGHWAY ADMINISTRATION
OFFICE OF FEDERAL LANDS HIGHWAY

NEW RIVER GORGE NATIONAL PARK AND PRESERVE

# TABULATION OF QUANTITIES

CUNARD RIVER ACCESS ROAD

SCHEDULE A

## PAVEMENT / SURFACE SUMMARY

| SHEET | ROUTE NUMBER | STATION TO STATION | ROUTE LENGTH | Schedule A Pay Item 20303-1600 REMOVAL OF PAVEMENT, ASPHALT | Schedule A Pay Item 30202-2000 ROADWAY AGGREGATE, METHOD 2 | Schedule A Pay Item 40301-0100 ASPHALT CONCRETE PAVEMENT, TYPE 1, 1/2" NMSA | Schedule A Pay Item 40301-0100 ASPHALT CONCRETE PAVEMENT, TYPE 1, 3/4" NMSA | Schedule A Pay Item 41202-0000 TACK COAT | Schedule A Pay Item 41301-0600 ASPHALT PAVEMENT MILLING, 2-INCH DEPTH |
|---|---|---|---|---|---|---|---|---|---|
| | | | Ft | SQYD | TON | TON | TON | GAL | SQYD |
| D01 | 117 | 100+93 to 105+86 | 493 | | | 119 | 179 | 164 | |
| D01 | 117 | 105+86 to 107+68 | 182 | | | 43 | | 59 | 394 |
| D01 | 117 | 107+68 to 110+40 | 272 | | | 66 | 99 | 91 | |
| D01 | 117 | 110+40 to 112+60 | 220 | | | 54 | | 74 | 494 |
| D02 | 117 | 112+60 to 117+00 | 440 | 1,032 | 311 | 109 | 161 | 151 | |
| D02 | 117 | 117+00 to 117+50 | 50 | | | 11 | | 16 | 105 |
| D04 | 117 | 117+50 to 118+00 | 50 | | | 12 | 17 | 16 | |
| D04 | 117 | 118+00 to 119+30 | 130 | | | 40 | | 55 | 367 |
| D04 | 117 | 119+30 to 119+65 | 35 | | | 9 | 14 | 13 | |
| D04 | 117 | 119+65 to 121+40 | 175 | | | 42 | | 58 | 387 |
| D04 | 117 | 121+40 to 121+90 | 50 | | | 12 | 18 | 17 | |
| A04 | | | | | | 48 | | 67 | 444 |
| | | | Subtotal this Sheet | 1,032 | 311 | 565 | 488 | 781 | 2191 |
| | | | Rounded Total | 1,080 | 340 | 620 | 535 | 860 | 2300 |

# CONSTRUCTION SIGN SUMMARY

| SCHEDULE | Sheet/ Detail No. | MUTCD NO. | SIGN TEXT | PANEL SIZE WIDTH (in) | HEIGHT (in) | AREA (sqft) | COLOR COMBINATION | QUANTITY | Schedule A Section 635 TEMPORARY TRAFFIC CONTROL, CONSTRUCTION SIGN SQFT | REMARKS |
|---|---|---|---|---|---|---|---|---|---|---|
| A | A04 | R11-2 | ROAD CLOSED | 48 | 30 | 10.00 | Black on White | 2 | 20.0 | |
| A | 635-9A | W20-1 | ROAD WORK AHEAD | 36 | 36 | 9.00 | Black on Orange | 2 | 18.0 | |
| A | 635-9A | W20-4 | ONE LANE ROAD AHEAD | 36 | 36 | 9.00 | Black on Orange | 2 | 18.0 | |
| A | 635-9A | W3-3 | SIGNAL | 36 | 36 | 9.00 | Black on Orange | 2 | 18.0 | |
| A | 635-9A | G20-2 | END ROAD WORK | 36 | 18 | 4.50 | Black on Orange | 2 | 9.0 | |
| A | A04 | W20-3 | ROAD CLOSED AHEAD | 36 | 36 | 9.00 | Black on Orange | 1 | 9.0 | |
| A | A04 | W20-3 | ROAD CLOSED 500 FT | 36 | 36 | 9.00 | Black on Orange | 1 | 9.0 | |
| A | A04 | W20-3 | ROAD CLOSED 1000 FT | 36 | 36 | 9.00 | Black on Orange | 1 | 9.0 | |
| A | 635-9A | R10-6 | STOP HERE ON RED | 24 | 36 | 6.00 | Black on White | 2 | 12.0 | |
| A | 635-9A | W1-4 | REVERSE CURVE - RIGHT | 36 | 36 | 9.00 | Black on Orange | 1 | 9.0 | |
| A | 635-6 | W20-7 | FLAGGER | 36 | 36 | 9.00 | Black on Orange | 2 | 18.0 | |
| A | 635-6 | W16-2P | 100 FEET | 24 | 18 | 3.00 | Black on Orange | 2 | 6.0 | |
| | | | | | | | | Subtotal this Sheet | 155 | |

Note:
Construct and erect all signs in accordance with the "Manual on Uniform Traffic Control Devices" (MUTCD), latest edition.

M:\PROJECTS\neri\107(3)\HWY_DES\CADD\C01-C05-WV_NP_NERI_107(3)_qnt.dgn [Construction Signs]
9 February 2026 1:22 PM

| NO. | DATE | BY | REVISIONS |
|---|---|---|---|
| | | | |
| | | | |
| | | | |
| | | | |

U.S. DEPARTMENT OF TRANSPORTATION
FEDERAL HIGHWAY ADMINISTRATION
OFFICE OF FEDERAL LANDS HIGHWAY

NEW RIVER GORGE NATIONAL PARK AND PRESERVE

**SUMMARIES AND SCHEDULES**

CUNARD RIVER ACCESS ROAD

SCHEDULE A

| PROJECT | SHEET NUMBER |
|---|---|
| WV NP NERI 107(3) | D01 |

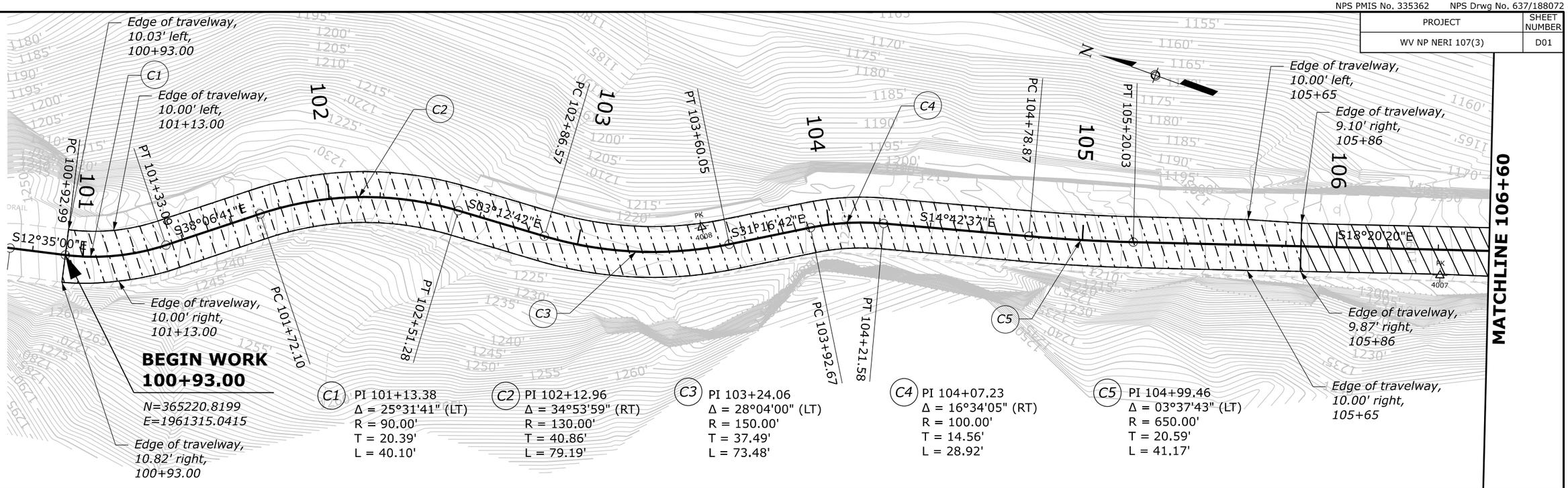


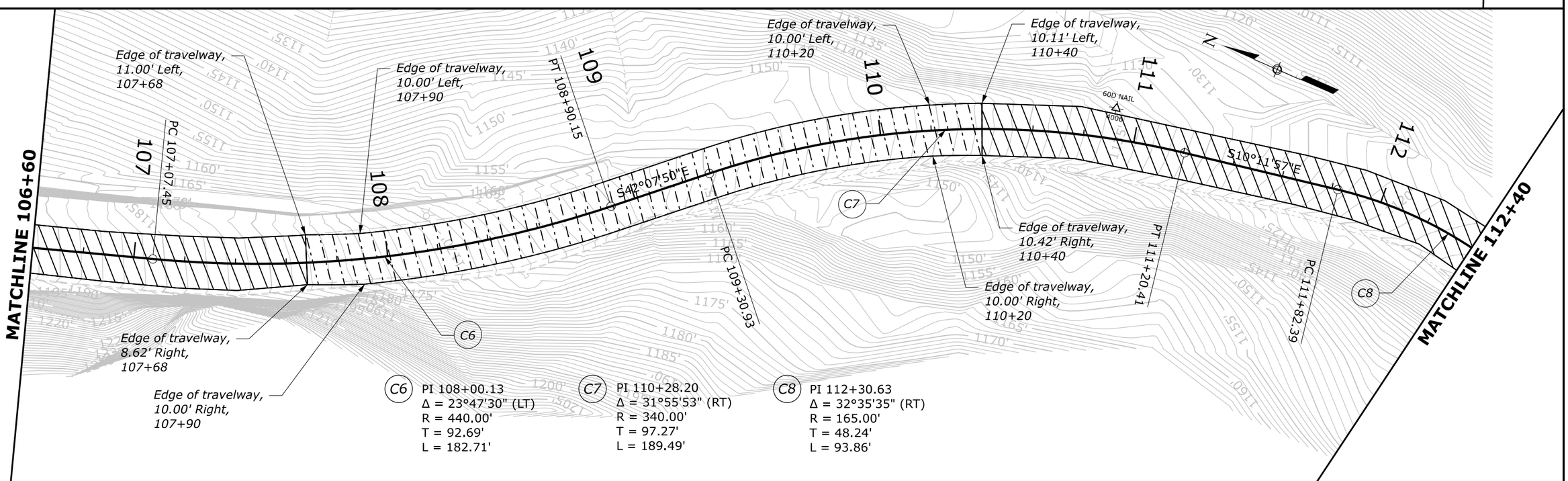


| NO. | DATE | BY | REVISIONS |
|---|---|---|---|
| | | | |
| | | | |
| | | | |
| | | | |

U.S. DEPARTMENT OF TRANSPORTATION
FEDERAL HIGHWAY ADMINISTRATION
OFFICE OF FEDERAL LANDS HIGHWAY

0 20 40
SCALE IN FEET

NEW RIVER GORGE NATIONAL PARK AND PRESERVE

# PLAN

CUNARD RIVER ACCESS ROAD
SCHEDULE A

M:\PROJECTS\nerf\107(3)\HWY_DES\CADD\D01-WV_NP_NERI_107(3)_pln.dgn [Cunard River Access Road-1 - Plan 1 [Sheet]]
19 November 2025 10:11 AM

| PROJECT | SHEET NUMBER |
|---|---|
| WV NP NERI 107(3) | D02 |

## NOTES:

1. See the Superelevation Tables Sheet for pavement cross slopes.
2. See the Standards and Details for more information.
3. Place riprap, Class 2, on berm sideslopes steeper than 1V:2H.

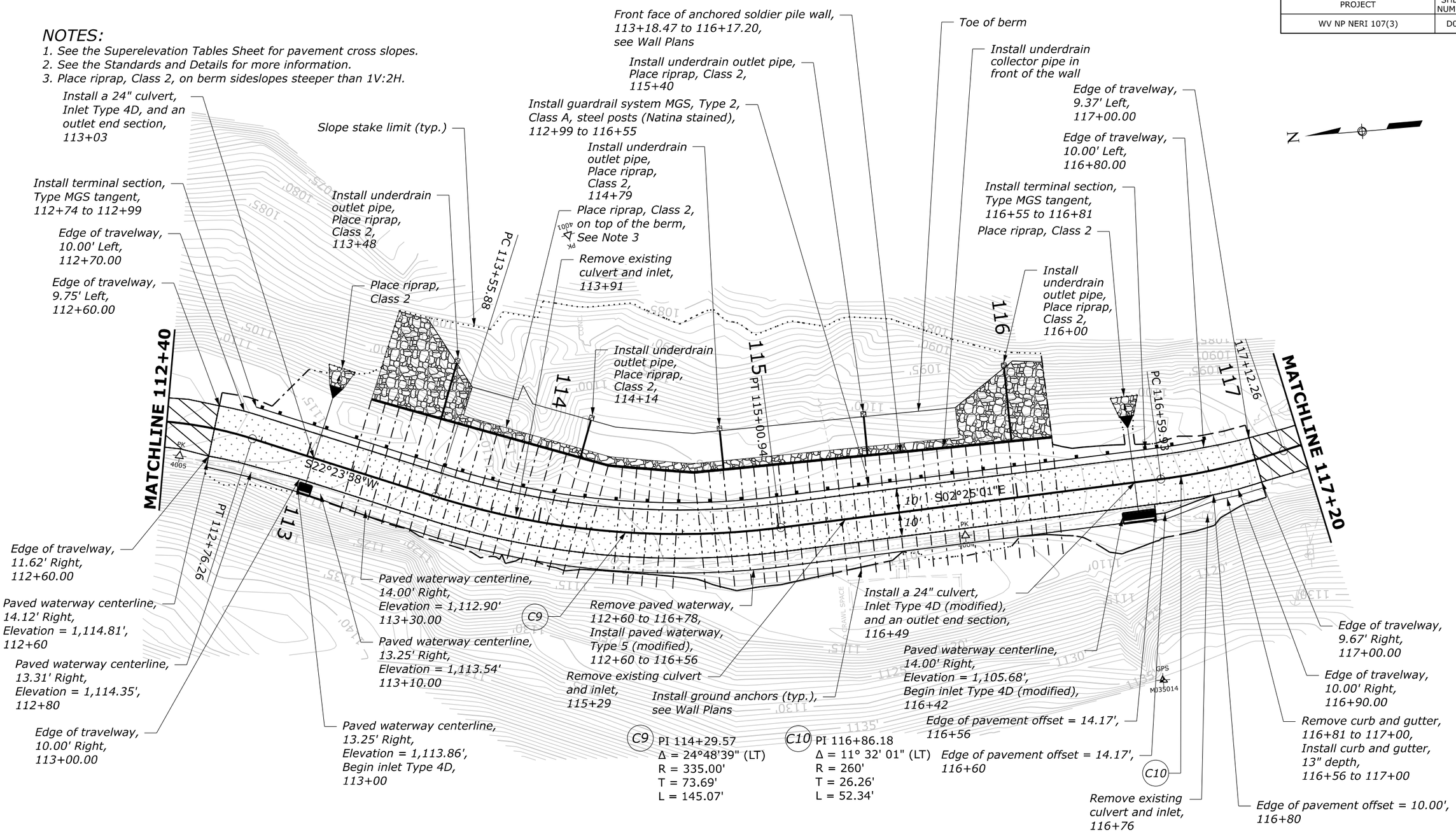


| NO. | DATE | BY | REVISIONS |
|---|---|---|---|
| | | | |
| | | | |
| | | | |
| | | | |

U.S. DEPARTMENT OF TRANSPORTATION
FEDERAL HIGHWAY ADMINISTRATION
OFFICE OF FEDERAL LANDS HIGHWAY

0 20 40
SCALE IN FEET

NEW RIVER GORGE NATIONAL PARK AND PRESERVE

# PLAN

CUNARD RIVER ACCESS ROAD
SCHEDULE A

M:\PROJECTS\neri\107(3)\WV_DES\CADD\002-003-WV_NP_NERI_107(3)_pln_pro.dgn [Cunard River Access Road - Plan 1 [Sheet]]
20 November 2025 1:41 PM

| PROJECT | SHEET NUMBER |
|---|---|
| WV NP NERI 107(3) | D03 |

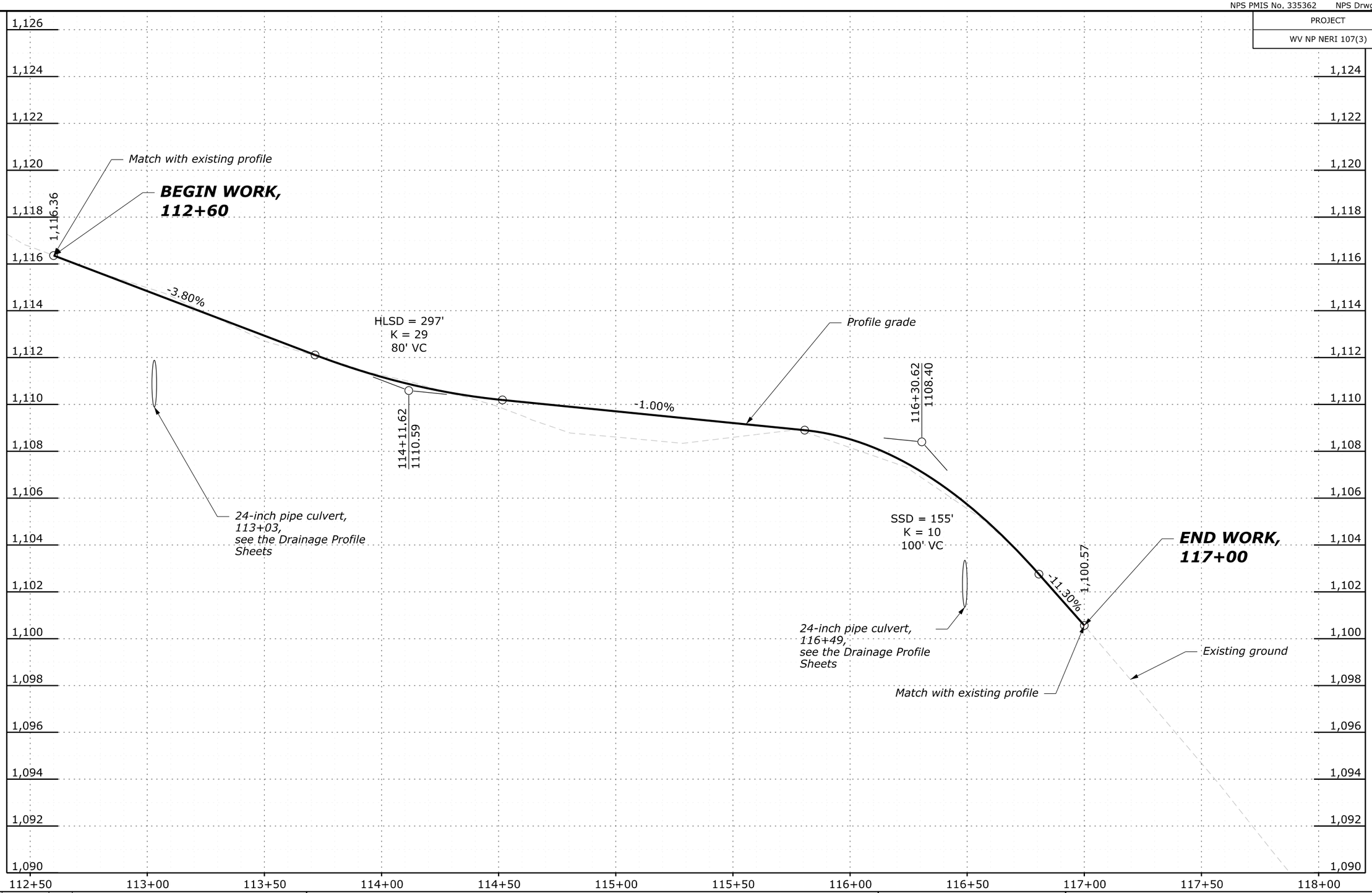


| NO. | DATE | BY | REVISIONS |
|---|---|---|---|
| | | | |
| | | | |
| | | | |
| | | | |

U.S. DEPARTMENT OF TRANSPORTATION
FEDERAL HIGHWAY ADMINISTRATION
OFFICE OF FEDERAL LANDS HIGHWAY

NEW RIVER GORGE NATIONAL PARK AND PRESERVE

# PROFILE

CUNARD RIVER ACCESS ROAD

SCHEDULE A

C:\PROJECTS\nerl\107(3)\HWY_DES\CADD\D02-D03-WV_NP_NERI_107(3)_plh_pro.dgn [Cunard River Access Road Profile 3 - Profile 1 [Sheet]]
18 July 2025 12:40 PM

| PROJECT | SHEET NUMBER |
|---|---|
| WV NP NERI 107(3) | D04 |

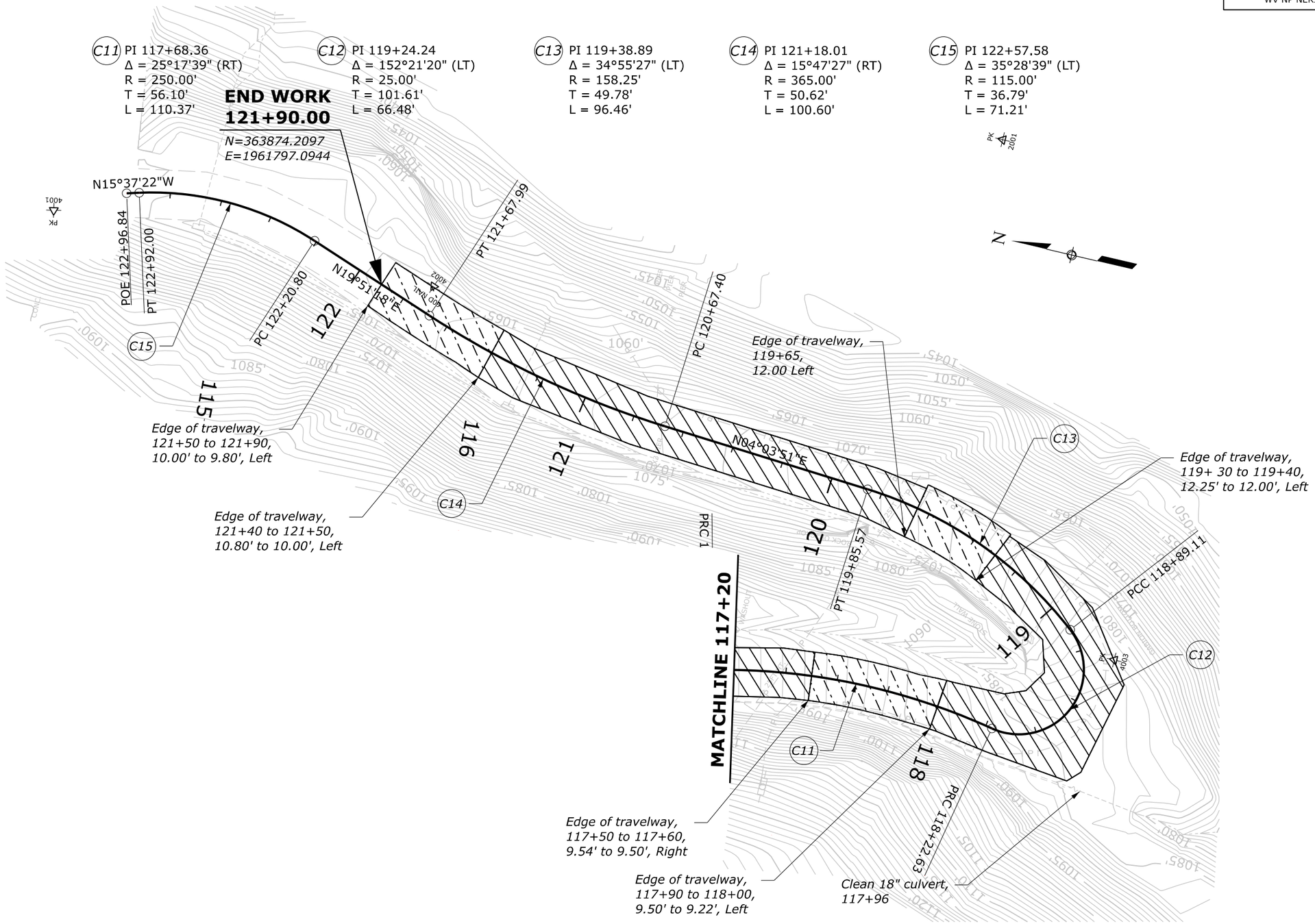


| NO. | DATE | BY | REVISIONS |
|---|---|---|---|
| | | | |
| | | | |
| | | | |
| | | | |

U.S. DEPARTMENT OF TRANSPORTATION
FEDERAL HIGHWAY ADMINISTRATION
OFFICE OF FEDERAL LANDS HIGHWAY

0 20 40
SCALE IN FEET

NEW RIVER GORGE NATIONAL PARK AND PRESERVE

# PLAN

CUNARD RIVER ACCESS ROAD
SCHEDULE A

C:\PROJECTS\nerl\107(3)\HWY_DES\CADD\D04-WV_NP_NERI_107(3)_plh.dgn [Cunard River Access Road - Plan 1 [Sheet]]
22 October 2025 11:08 AM

| PROJECT | SHEET NUMBER |
|---|---|
| WV NP NERI 107(3) | F01 |

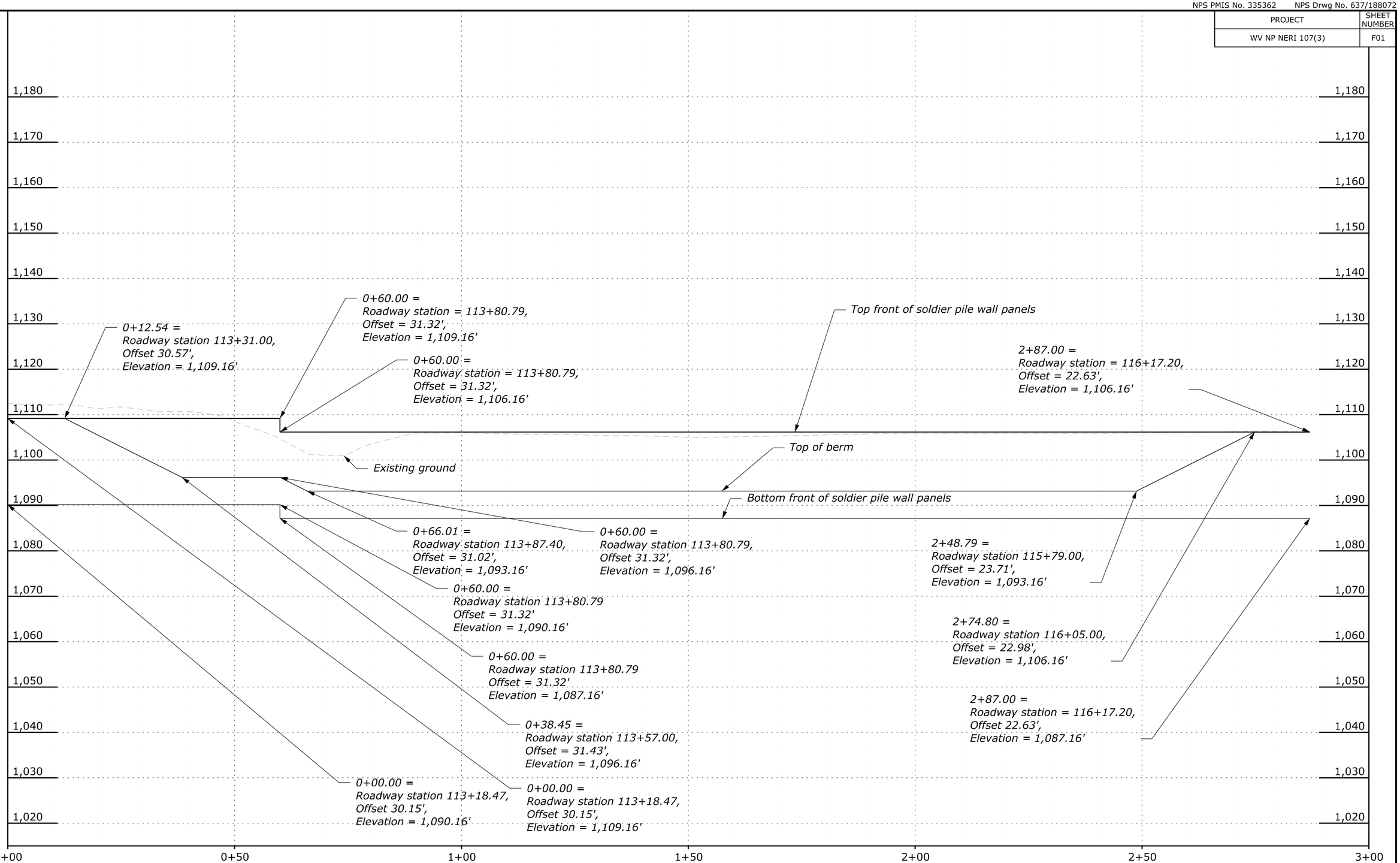


| NO. | DATE | BY | REVISIONS |
|---|---|---|---|
| | | | |
| | | | |
| | | | |
| | | | |

U.S. DEPARTMENT OF TRANSPORTATION
FEDERAL HIGHWAY ADMINISTRATION
OFFICE OF FEDERAL LANDS HIGHWAY

NEW RIVER GORGE NATIONAL PARK AND PRESERVE

# WALL PROFILE

CUNARD RIVER ACCESS ROAD

SCHEDULE A

C:\PROJECTS\neri\107(3)\WVY_DES\CADD\F01-WV_NP_NERI_107(3)_wall_pro.dgn [Top_Front_of_Wall_2 - Profile 1 [Sheet]]
14 July 2025 11:16 AM

| PROJECT | SHEET NUMBER |
|---|---|
| WV NP NERI 107(3) | K01 |

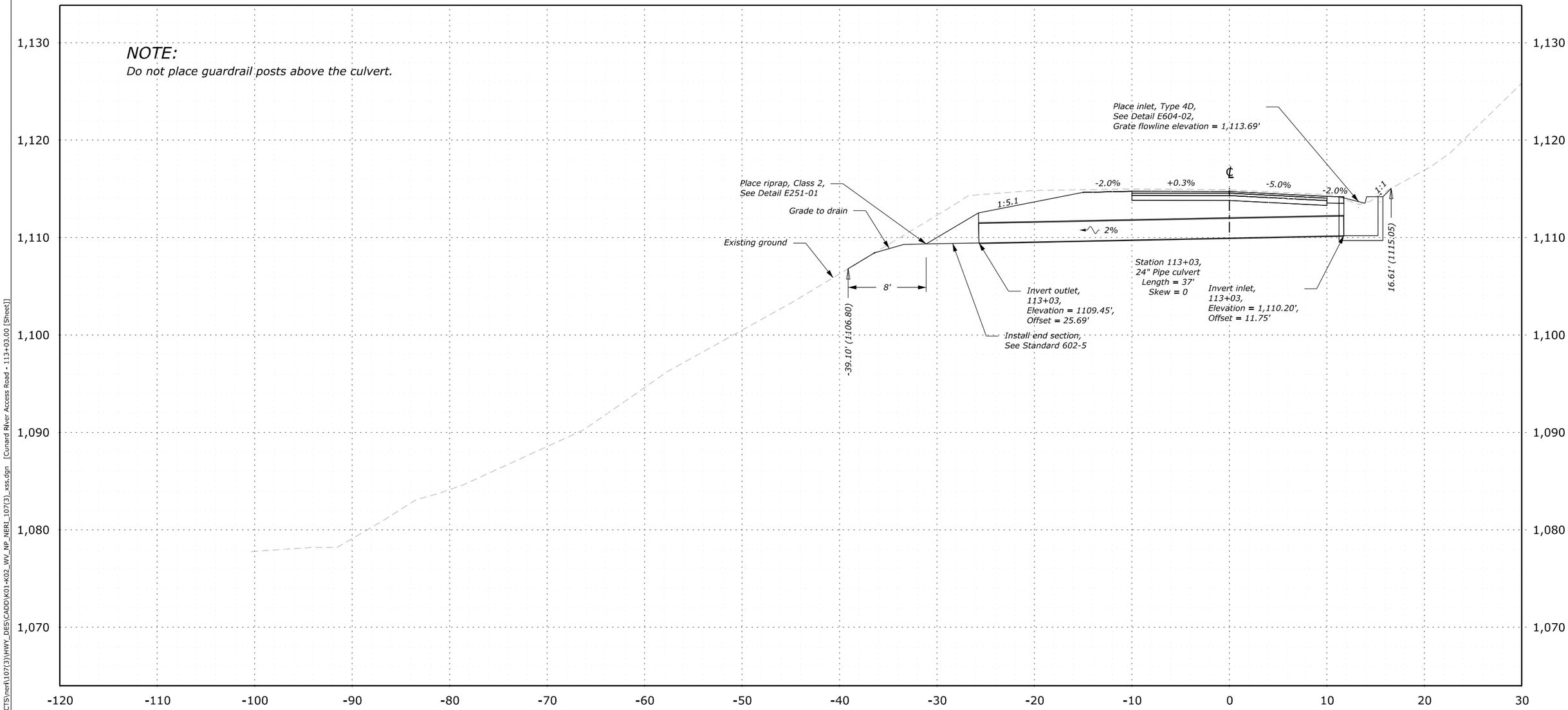


**113+03.00**
**Des Grade = 1,114.72**
**Subgrade = 1,113.80**
**Original Grnd = 1,114.89**

C:\PROJECTS\nerl\107(3)\HWY_DES\CADD\K01-K02_WV_NP_NERI_107(3)_xss.dgn [Cunard River Access Road - 113+03.00 [Sheet]]

13 June 2025 2:14 PM

| NO. | DATE | BY | REVISIONS |
|---|---|---|---|
| | | | |
| | | | |
| | | | |
| | | | |

U.S. DEPARTMENT OF TRANSPORTATION
FEDERAL HIGHWAY ADMINISTRATION
OFFICE OF FEDERAL LANDS HIGHWAY

NEW RIVER GORGE NATIONAL PARK AND PRESERVE

# DRAINAGE PROFILES

CUNARD RIVER ACCESS ROAD

SCHEDULE A

| PROJECT | SHEET NUMBER |
|---|---|
| WV NP NERI 107(3) | K02 |

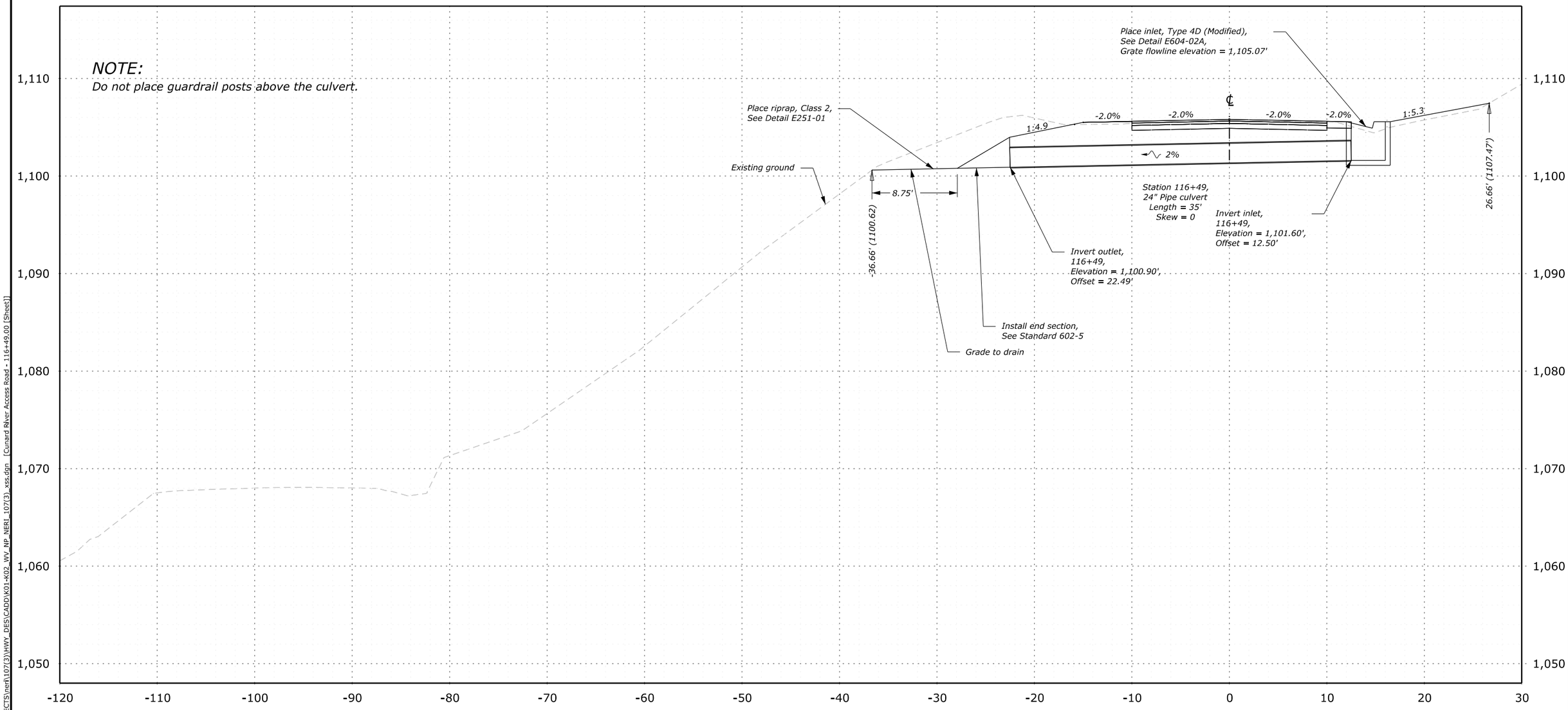


**116+49.00**
**Des Grade = 1,105.81**
**Subgrade = 1,104.89**
**Original Grnd = 1,105.61**

| NO. | DATE | BY | REVISIONS |
|---|---|---|---|
| | | | |
| | | | |
| | | | |
| | | | |

U.S. DEPARTMENT OF TRANSPORTATION
FEDERAL HIGHWAY ADMINISTRATION
OFFICE OF FEDERAL LANDS HIGHWAY

NEW RIVER GORGE NATIONAL PARK AND PRESERVE

# DRAINAGE PROFILES

CUNARD RIVER ACCESS ROAD

SCHEDULE A

C:\PROJECTS\neri\107(3)\HWY_DES\CADD\K01-K02_WV_NP_NERI_107(3)_xss.dgn [Cunard River Access Road - 116+49.00 [Sheet]]
17 July 2025 1:42 PM

***Project Description***

*This project consists of the construction of an anchored soldier pile wall, reconstruction of the roadway section with asphalt concrete pavement and aggregate base, guardrail replacement with MGS, drainage improvements, and other miscellaneous work.*

*Soil disturbing activities include clearing and grubbing, soldier pile wall construction, guardrail installation, and slope stabilization. The total disturbed area for the project is approximately 0.96 acres. The receiving water is the New River.*

*No new impervious surface will be created under work of this project.*

***Prohibited Discharges***

*The following discharges are prohibited:*

- *Wash-water from concrete, paint, curing compounds, and other construction materials*
- *Fuels, oils, equipment-related compounds*
- *Soaps, solvents used for vehicle washing*
- *Waste, garbage, sanitary waste*

*Inspect and maintain on a regular basis, all mechanized equipment used in or near surface water to prevent contamination from fuels, lubricants, hydraulic fluids, or other toxic materials.*

*Solid waste generated from the project will consist of construction debris, garbage, and empty containers. Collect and store all waste in dumpsters, or in metal or plastic drums, as appropriate.*

*Hazardous waste will not be generated from normal construction activities. Equipment fueling and maintenance could generate spills, leaks, and hazardous wastes like motor oil, diesel, gasoline, and battery fluid. If feasible, conduct these activities in a covered area to avoid contact with storm water. Store all hazardous waste materials in appropriate and clearly marked containers away from other non-waste materials. Do not dispose of hazardous waste materials into the on-site dumpsters. Dispose of material according to Federal, State, and local regulations.*

*Develop and implement a Spill Prevention Control and Countermeasures (SPCC) plan following the requirements under 40 CFR 112. Report spills large enough to discharge to surface waters to the National Response Center at 1-800-424-8802.*

***General Guidelines***

*The Erosion & Sediment Control Narrative is meant as a guideline for preventing erosion and controlling sediment. The work consists of applying measures throughout the life of the project to control erosion and to minimize the sedimentation of rivers, streams, and impoundments such as lakes, reservoirs, bays, and coastal waters. The measures consist of soil erosion control measures which are also defined and outlined in the Standard Specifications for Construction of Roads and Bridges on Federal Highway Projects, FP-24, and the Special Contract Requirements.*

*Do not modify the type, size, or location of any control or practice without prior approval from the Contracting Officer (CO).*
*No construction access will be permitted through a wetland or waterway.*
*Do not allow construction vehicles to track sediment outside the project limits.*
*Do not allow any construction equipment to operate on or access the down-slope side of the perimeter control measures.*
*Direct storm water to vegetated buffer areas and do not discharge directly into surface waters.*

***Sequence of Construction***

***Phase I Establish Perimeter Controls***

*Prior to any clearing, grubbing, or excavation, construct perimeter controls to ensure that disturbed sediment does not leave the project site. Perimeter controls include fiber roll and other specified measures outside the construction limits.*

***Phase II Intermediate Controls***

*Apply intermediate controls during rough grading operations.*

*The CO may direct installation of certain controls in order to forestall or mitigate potential erosion problems.*

*Apply temporary turf establishment in disturbed areas that will remain exposed for over 14 days within 7 days. Apply permanent turf establishment to the finished slopes according to Section 625.*

*At the end of each day's grading operations, shape earthwork to minimize and control erosion from storm runoff.*

*Upon completion of culverts, ensure that culvert entrances, outlets, and outlet channels are at final grade and are stabilized (with vegetation, riprap, or pavement) before routing drainage through completed culverts. Ensure intermediate stabilization is in place until final stabilization has been established in areas adjacent to the paved waterway and the curb and gutter.*

*Provide fiber roll around all stockpiled excavated roadway material. Apply temporary turf establishment to stockpiles remaining in place longer than 14 days within 7 days of stockpiling.*

*Provide watering for dust control within the construction limits, on active haul roads, and in pits and staging areas.*

***Phase III Final Construction / Stabilization***

*After completion of roadway construction, do the following as directed by the CO:*

- *Finish grading, place riprap, and apply permanent turf establishment to any remaining disturbed areas.*
- *Where necessary, replace eroded topsoil and re-apply permanent turf establishment to disturbed areas where vegetation has not established.*
- *Inspect, clean, and repair all culvert outlet protection, riprap basins, and stabilized channels.*
- *Remove all devices used for dewatering.*
- *Remove silt fence only after all upslope areas are stabilized and vegetation is well established.*

*Remove all other perimeter controls when directed by the CO.*

***Maintenance and Inspection Procedures***

*Unless stated otherwise, construct and maintain all vegetated and structural erosion control practices according to Section 157, the details shown in the plans, and the individual permitting requirements. Check and maintain erosion control measures once every 7 days and within 24 hours after a rain of 0.25 inches or more, and daily during wet weather. Repair or replace any damaged measures by the end of the day.*

*Fiber roll - Inspect weekly and after each runoff event. Remove sediment deposits from behind the fiber roll when they reach half the height of the device. Dispose of the sediment legally off-site. Replace damaged fiber roll within 24 hours of inspection.*

*Sediment traps - Inspect sediment traps regularly and clean sediment deposits from trap.*

*Stabilized construction exit - Inspect every 7 days and after a storm event of 0.5 inch or greater. If vehicles passing through the stabilized exit continue to track sediment onto adjacent roadways, replenish stone or replace it completely. Immediately sweep any sediment on roadway.*

*Inlet protection - Inspect to ensure that inlet protection remains firmly in place and is not damaged or clogged. Clean clogged inlet protection or replace clogged or damaged inlet protection as necessary.*

*Record the inspection date and summary of findings within 24 hours of completing a site inspection.*



# EROSION AND SEDIMENT CONTROL NARRATIVE

| PROJECT | SHEET NUMBER |
|---|---|
| WV NP NERI 107(3) | M02 |

## NOTES:

1. Obtain approval for the limits of the stabilized construction exit.
2. See the Standards and Details for more information.
3. Install riprap on the sideslope of the berm in areas where the sideslope is steeper than 1V:2H.
4. Fiber rolls that are free of sediment may be reused for mulching as approved.

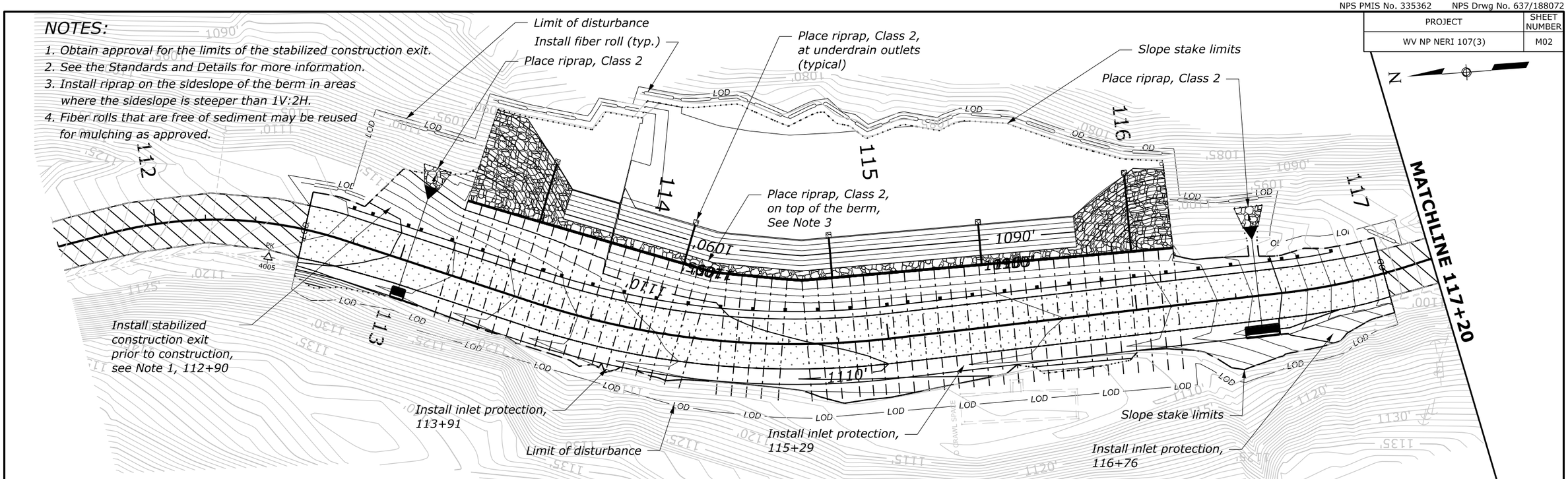


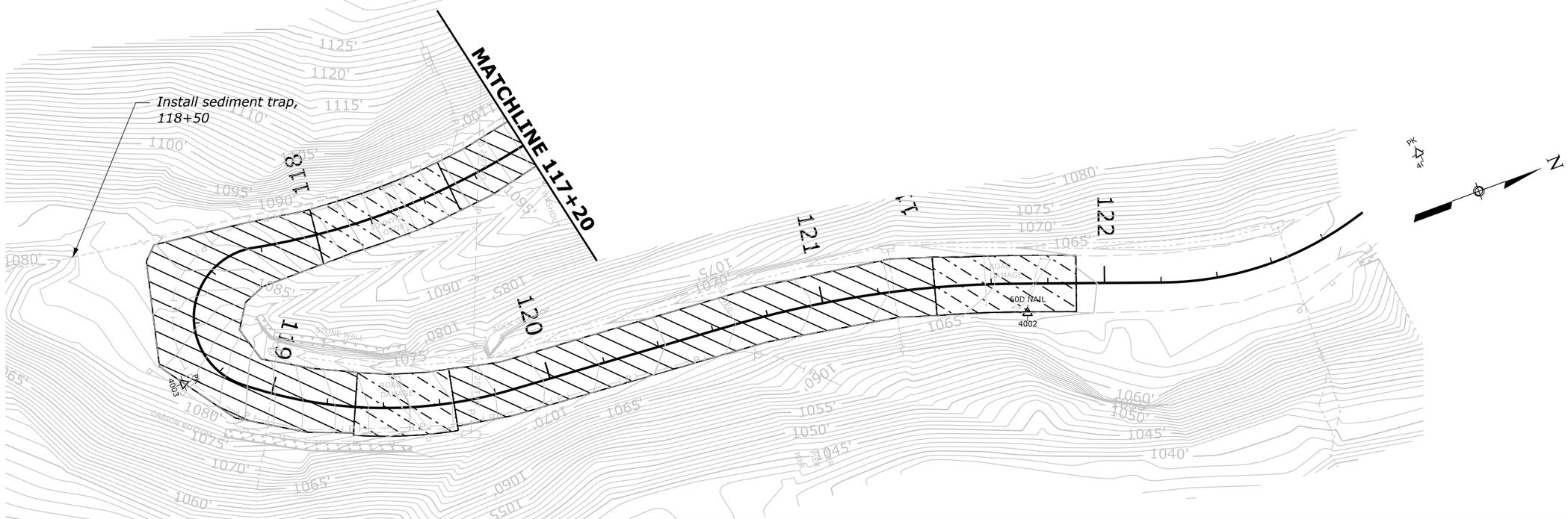


| NO. | DATE | BY | REVISIONS |
|---|---|---|---|
| | | | |
| | | | |
| | | | |
| | | | |

U.S. DEPARTMENT OF TRANSPORTATION
FEDERAL HIGHWAY ADMINISTRATION
OFFICE OF FEDERAL LANDS HIGHWAY

0 20 40
SCALE IN FEET

NEW RIVER GORGE NATIONAL PARK AND PRESERVE

# EROSION AND SEDIMENT CONTROL PLAN

CUNARD RIVER ACCESS ROAD, SCHEDULE A

M:\PROJECTS\nerl\107(3)\HWY_DES\CADD\M02-WV_NP_NERI_107(3).dgn [Cunard River Access Road - Plan 3 [Sheet]]
9 February 2026 1:27 PM

NPS PMIS No. 335362 NPS Drwg No. 637/188072

| PROJECT | SHEET NUMBER |
|---|---|
| WV NP NERI 107(3) | P01 |

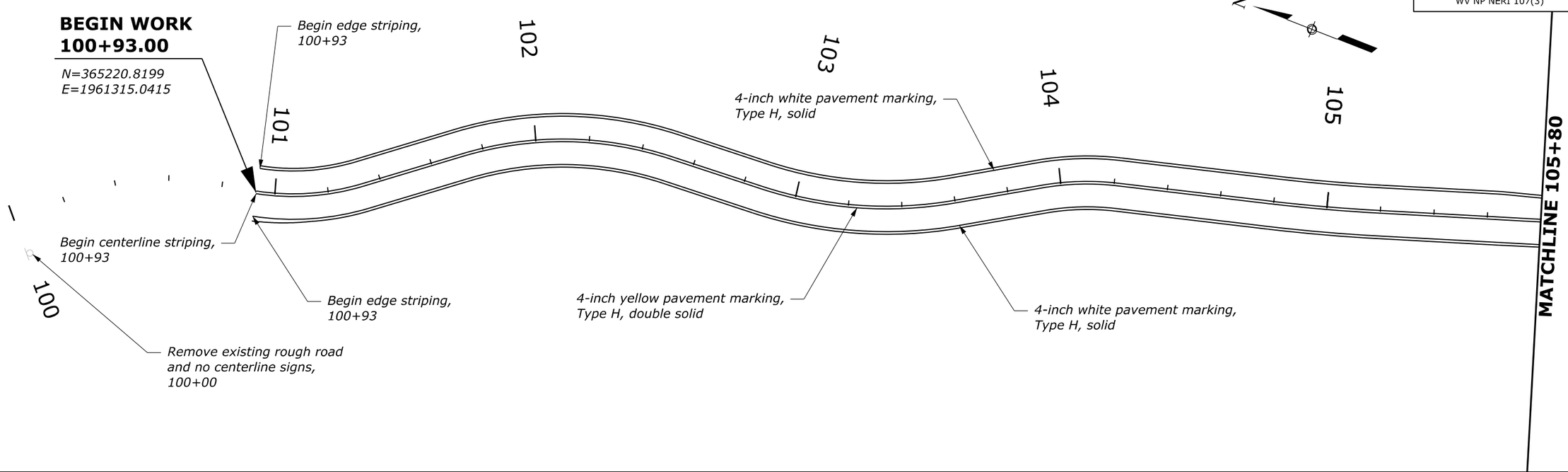


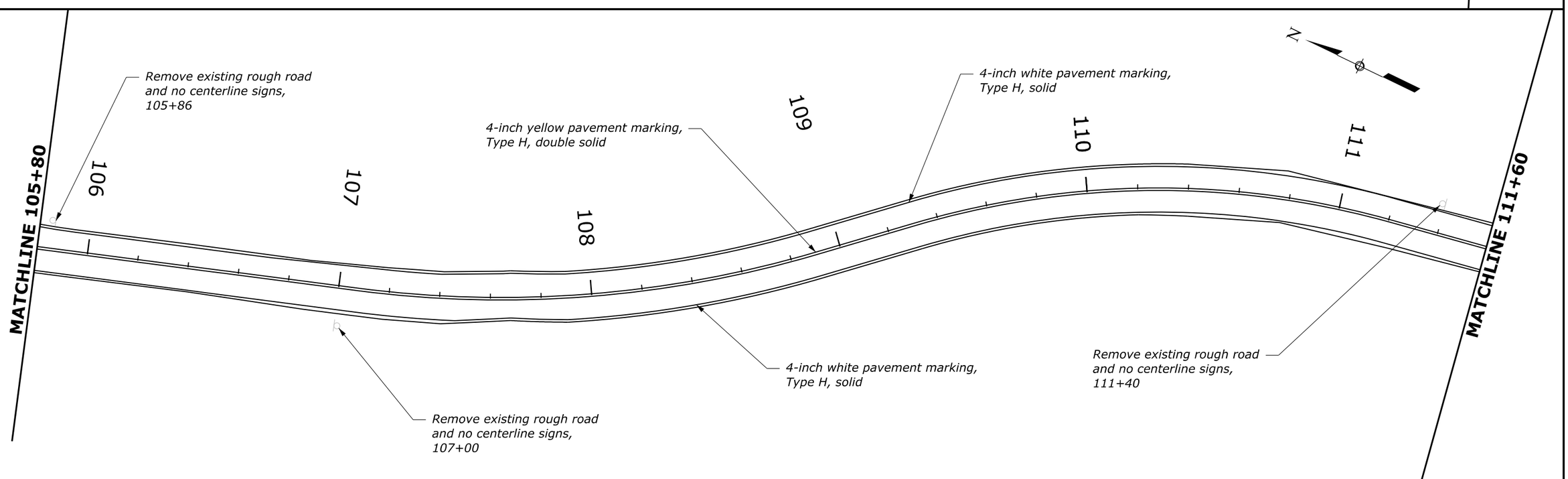


| NO. | DATE | BY | REVISIONS |
|---|---|---|---|
| | | | |
| | | | |
| | | | |
| | | | |

U.S. DEPARTMENT OF TRANSPORTATION
FEDERAL HIGHWAY ADMINISTRATION
OFFICE OF FEDERAL LANDS HIGHWAY

0 20 40
SCALE IN FEET

NEW RIVER GORGE NATIONAL PARK AND PRESERVE

# SIGNING AND STRIPING PLAN

CUNARD RIVER ACCESS ROAD

SCHEDULE A

M:\PROJECTS\nerl\107(3)\HWY_DES\CADD\P01-P02-WV_NP_NERI_107(3)_sgn.dgn [Cunard River Access Road - Plan 1 [Sheet]]

7 November 2025 12:41 PM

| PROJECT | SHEET NUMBER |
|---|---|
| WV NP NERI 107(3) | P02 |

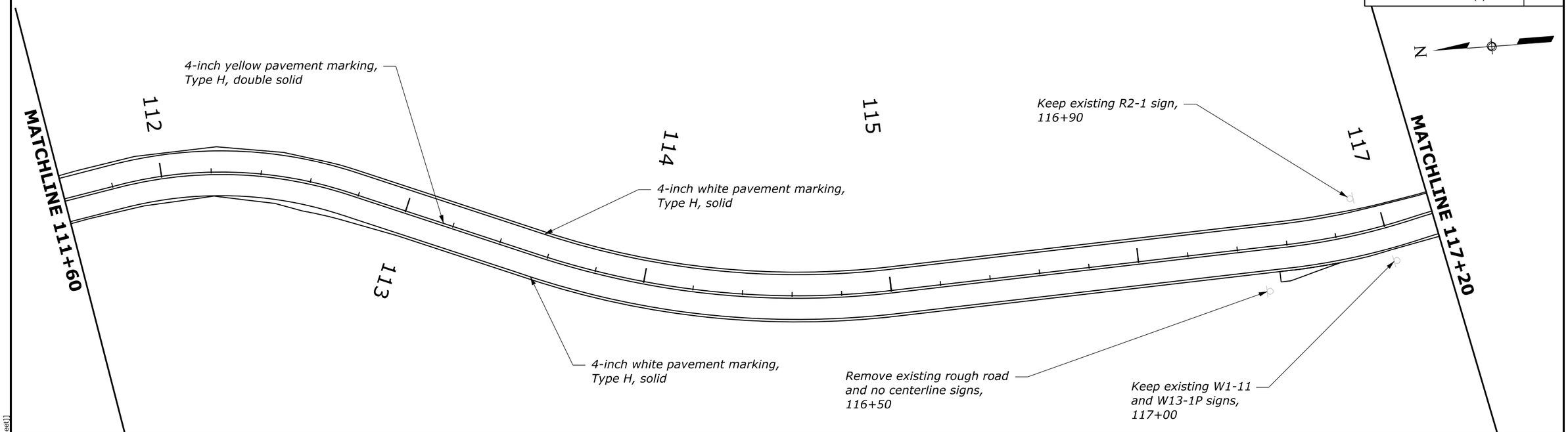


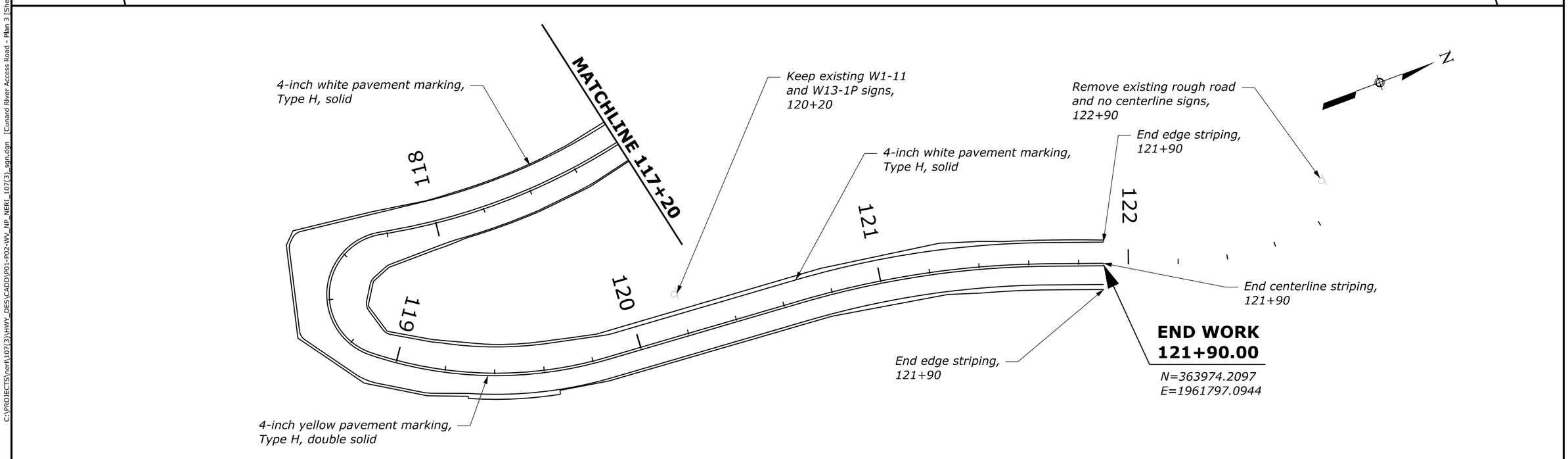


| NO. | DATE | BY | REVISIONS |
|---|---|---|---|
| | | | |
| | | | |
| | | | |
| | | | |

U.S. DEPARTMENT OF TRANSPORTATION
FEDERAL HIGHWAY ADMINISTRATION
OFFICE OF FEDERAL LANDS HIGHWAY

0 20 40
SCALE IN FEET

NEW RIVER GORGE NATIONAL PARK AND PRESERVE

# SIGNING AND STRIPING PLAN

CUNARD RIVER ACCESS ROAD

SCHEDULE A

C:\PROJECTS\nerl\107(3)\HWY_DES\CADD\P01-P02-WV_NP_NERI_107(3)_sgn.dgn [Cunard River Access Road - Plan 3 [Sheet]]
7 November 2025 12:40 PM

## GENERAL NOTES:

SPECIFICATIONS:

*Design:*

*AASHTO LRFD Bridge Design Specifications, 9th Edition, 2020 with 2021 Revisions.*

*Construction:*

*Standard Specifications for Construction of Roads and Bridges on Federal Highway Projects, FP-24.*

*Field verify all dimensions prior to ordering materials.*

DESIGN LOADS:

*Design Assumptions:*

*Concrete: 150 pcf*
*Soil weight of backfill: 120 pcf*
*Backfill angle of internal friction = 28°*

MATERIALS:

*Concrete:*

*Provide Class A (AE) for drilled shaft and precast concrete lagging panels with f'c = 4,500 psi at 28 days.*

*Structural Steel:*

*Provide all structural steel conforming to ASTM A709, Grade 50.*
*Provide XS steel pipe conforming to ASTM A53, Type F.*
*Provide all welding according to AASHTO/AWS Bridge Welding Code D1.5, 7th edition with 2019 interim revision.*
*Galvanize all piles and steel after fabrication according to AASHTO M 111.*

*Timber:*

*Pressure treat all timber in accordance with the latest AWPA U1. Provide use category UC4C timber.*

*Reinforcing Steel:*

*Provide reinforcing steel conforming to AASHTO M 31, Grade 60 deformed.*
*Provide 2-inch cover for reinforcing steel unless otherwise noted.*

*Ground Anchors:*

*Provide ground anchors conforming to AASHTO M 203 low-relaxation, seven wire steel strands ($f_{pu}$ = 270 ksi, nominal $A_s$ = 0.217 sq. in per strand) or AASHTO M 275 high-strength steel bars.*

## INDEX OF WALL PLAN SHEETS


| SHEET NO. | SHEET TITLE |
|---|---|
| 1 | General Notes and Index |
| 2 | Site Plan |
| 3 | Plan and Elevation - 1 |
| 4 | Plan and Elevation - 2 |
| 5 | Plan and Elevation - 3 |
| 6 | Pile Elevations Table |
| 7 | Wall Details - 1 |
| 8 | Wall Details - 2 |
| 9 | Wall Details - 3 |
| 10 | Wall Details - 4 |
| 11 | Anchor Details |
| 12 | Boring Log |

PMIS No. 335362 NPS Drwg No. 637/188072

| PROJECT | SHEET NUMBER |
|---|---|
| WV NP NERI 107(3) | R02 |

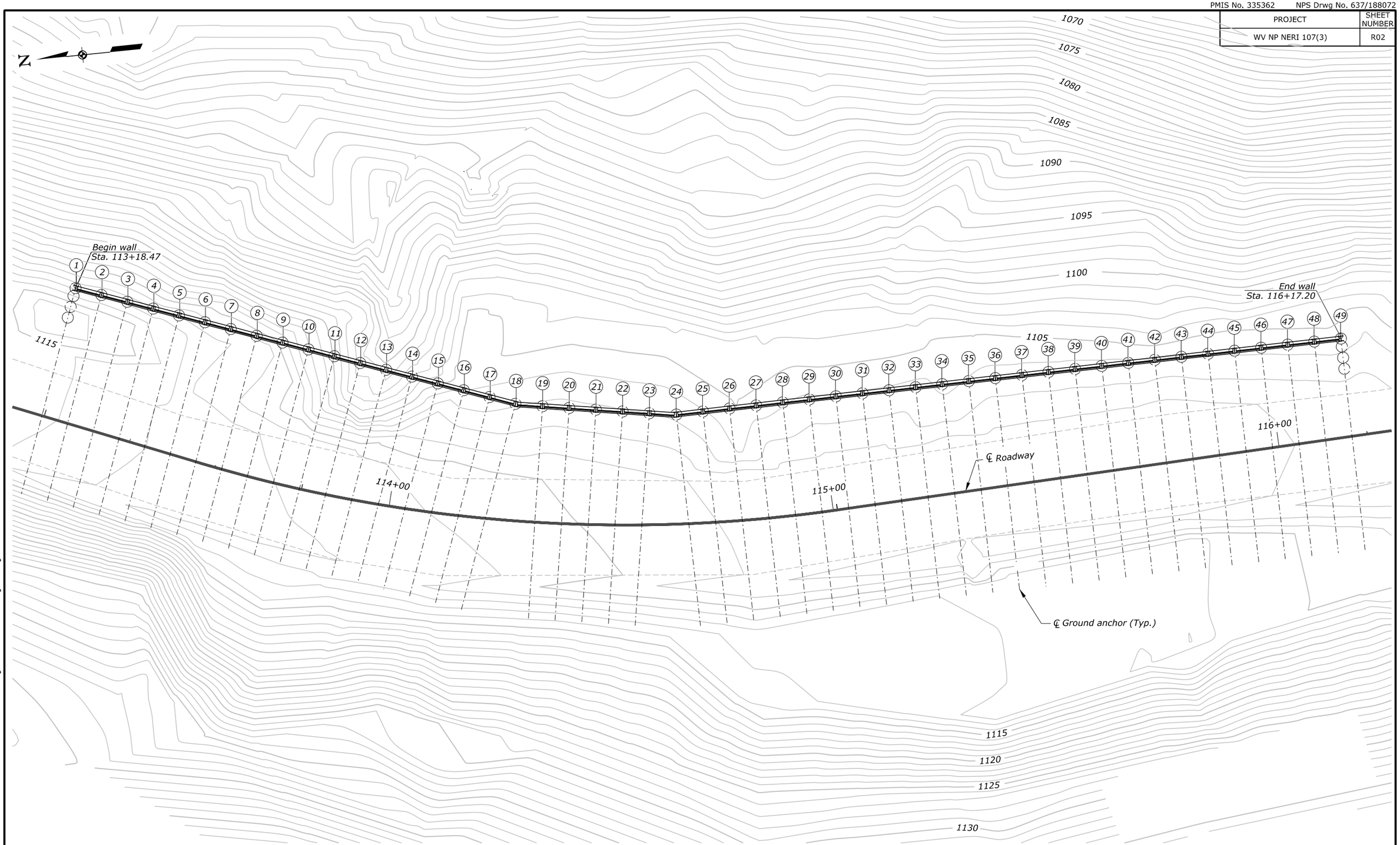


| STRUCTURE NO. | STRUCTURE NAME | FEATURES INTERSECTED | LOCATION | U.S. DEPARTMENT OF TRANSPORTATION FEDERAL HIGHWAY ADMINISTRATION OFFICE OF FEDERAL LANDS HIGHWAY |
|---|---|---|---|---|
| | | | NEW RIVER GORGE NATIONAL PARK AND PRESERVE CUNARD RIVER ACCESS ROAD | |

| NO. | DATE | BY | REVISIONS |
|---|---|---|---|
| | | | |

| DESIGNED BY | DRAWN BY | CHECKED BY | PROJECT TEAM LEAD | SCALE | BRIDGE PLAN SHEET | DATE | RG / BRP NO. |
|---|---|---|---|---|---|---|---|
| BC | BC / JEG | LTE / SL | Carlos Peña-Marsh | 1" = 10' | 2 of 12 | February 2026 | BRP-1345 |

# SITE PLAN

ACTUAL FILE:R02_neri 107(3)_Site_Plan.DGN

M:\PROJECTS\neri\107(3)\Bridge\Microstation\Bridge Design Files\T02\R02_neri 107(3)_Site_Plan.DGN

2/3/2026

| PROJECT | SHEET NUMBER |
|---|---|
| WV NP NERI 107(3) | R03 |

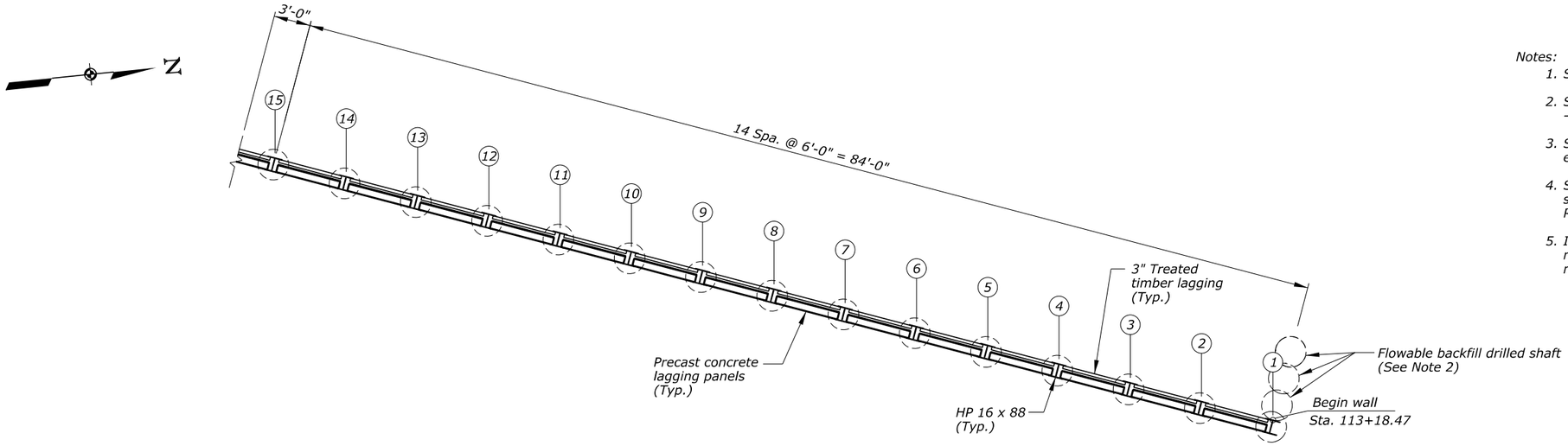


**PLAN**

*Notes:*

1. *See "ANCHOR DETAILS" sheet for additional information.*
2. *See "WALL DETAILS - 1", "WALL DETAILS - 2", "WALL DETAILS - 3", and "WALL DETAILS - 4" sheets for additional information.*
3. *See "PILE ELEVATIONS TABLE" sheet for pile stations and elevations.*
4. *Select drilling equipment and methods based on the expected subsurface conditions provided in the Geotechnical Data Report.*
5. *Identify ground anchor by the pile number and ground anchor number. Example for pile number 3 and ground anchor number 2, "Ground Anchor ID 3,2".*

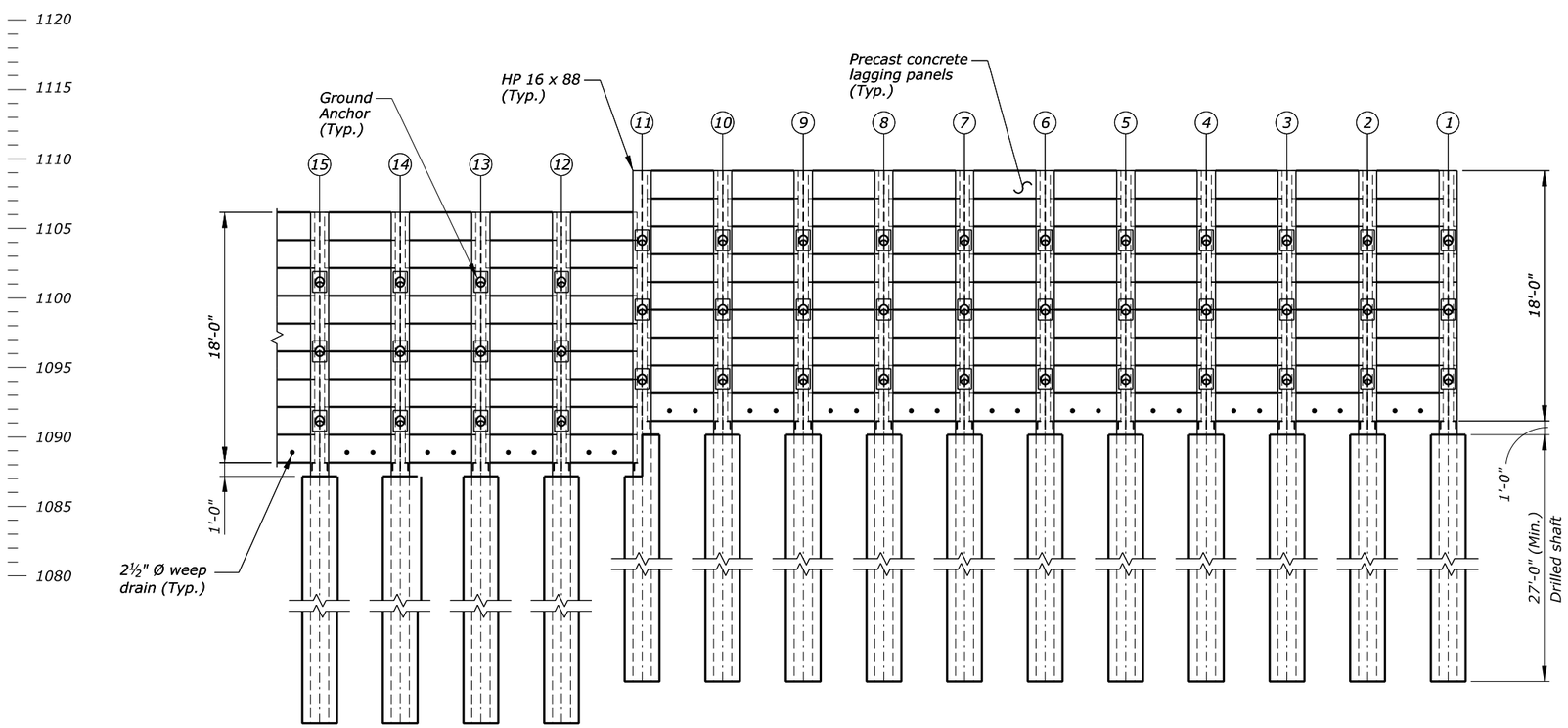


**ELEVATION**

| STRUCTURE NO. | STRUCTURE NAME | FEATURES INTERSECTED | LOCATION | U.S. DEPARTMENT OF TRANSPORTATION FEDERAL HIGHWAY ADMINISTRATION OFFICE OF FEDERAL LANDS HIGHWAY |
|---|---|---|---|---|
| | | | NEW RIVER GORGE NATIONAL PARK AND PRESERVE CUNARD RIVER ACCESS ROAD | |

| NO. | DATE | BY | REVISIONS |
|---|---|---|---|
| | | | |

| DESIGNED BY | DRAWN BY | CHECKED BY | PROJECT TEAM LEAD | SCALE | BRIDGE PLAN SHEET | DATE | RG / BRP NO. |
|---|---|---|---|---|---|---|---|
| BC | BC / JEG | LTE / SL | Carlos Peña-Marsh | 3/16" = 1'-0" | 3 of 12 | February 2026 | BRP-1345 |

# PLAN AND ELEVATION - 1

ACTUAL FILE:R03_neri 107(3)_P&E -1.DGN
M:\PROJECTS\neri\107(3)\Bridge\Microstation\Bridge Design Files\70X\R03_neri 107(3)_P&E -1.DGN
2/3/2026

| PROJECT | SHEET NUMBER |
|---|---|
| WV NP NERI 107(3) | R04 |

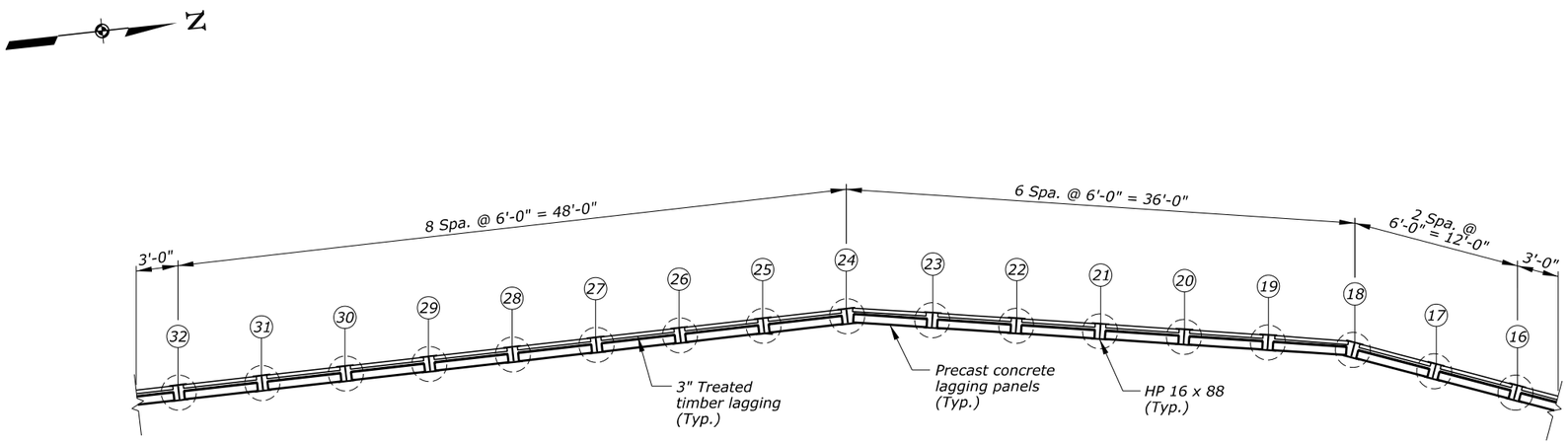


**PLAN**

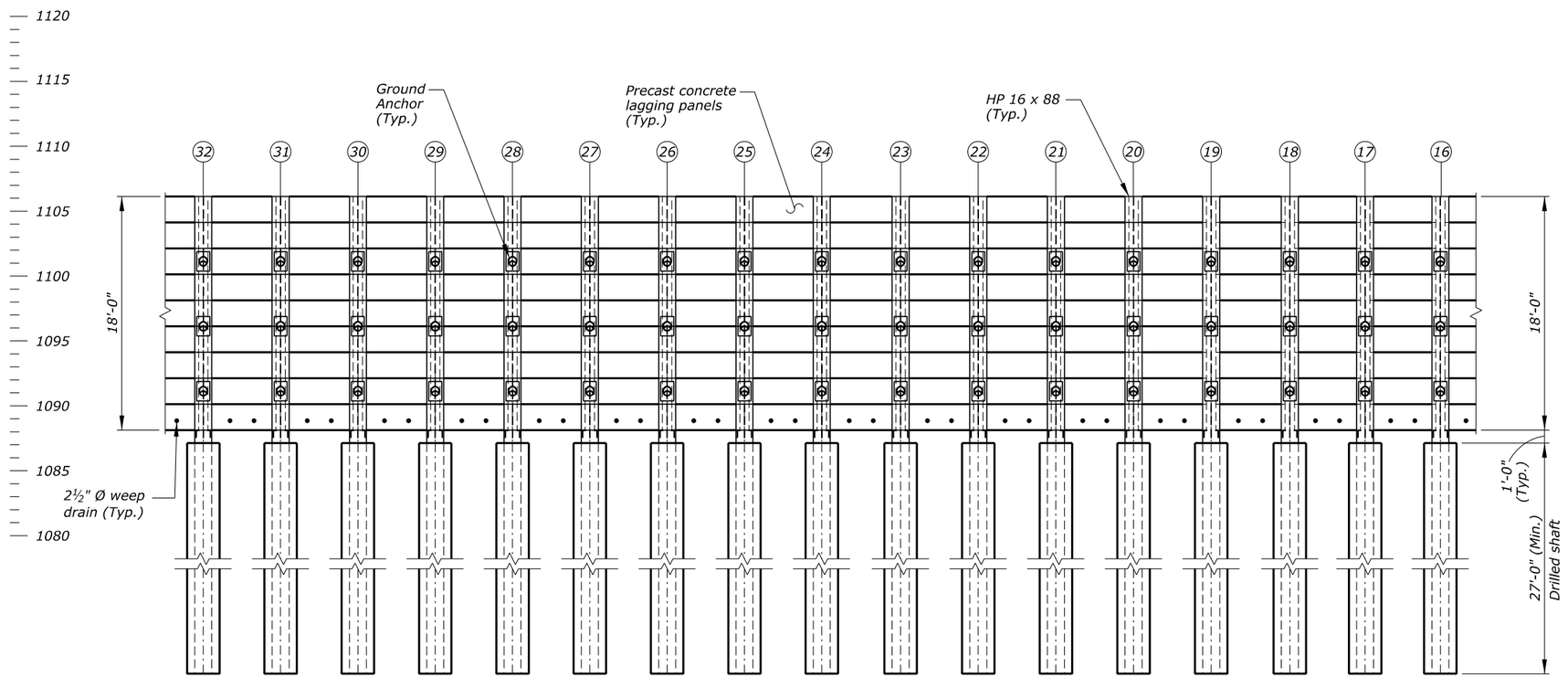


**ELEVATION**

*Notes:*

1. *See "ANCHOR DETAILS" sheet for additional information.*
2. *See "WALL DETAILS - 1", "WALL DETAILS - 2", "WALL DETAILS - 3", and "WALL DETAILS - 4" sheets for additional information.*
3. *See "PILE ELEVATIONS TABLE" sheet for pile stations and elevations.*
4. *Select drilling equipment and methods based on the expected subsurface conditions provided in the Geotechnical Data Report.*
5. *Identify ground anchor by the pile number and ground anchor number. Example for pile number 20 and ground anchor number 2, "Ground Anchor ID 20,2".*

| STRUCTURE NO. | STRUCTURE NAME | FEATURES INTERSECTED | LOCATION | U.S. DEPARTMENT OF TRANSPORTATION FEDERAL HIGHWAY ADMINISTRATION OFFICE OF FEDERAL LANDS HIGHWAY |
|---|---|---|---|---|
| | | | NEW RIVER GORGE NATIONAL PARK AND PRESERVE CUNARD RIVER ACCESS ROAD | |

| NO. | DATE | BY | REVISIONS | DESIGNED BY | DRAWN BY | CHECKED BY | PROJECT TEAM LEAD | SCALE | BRIDGE PLAN SHEET | DATE | RG / BRP NO. |
|---|---|---|---|---|---|---|---|---|---|---|---|
| | | | | BC | BC / JEG | LTE / SL | Carlos Peña-Marsh | 3/16" = 1'-0" | 4 of 12 | February 2026 | BRP-1345 |

# PLAN AND ELEVATION - 2

ACTUAL FILE:R04_neri 107(3)_P&E -2.DGN
M:\PROJECTS\neri\107(3)\BridgeMicrostation\Bridge Design Files\702\R04_neri 107(3)_P&E -2.DGN
2/3/2026

| PROJECT | SHEET NUMBER |
|---|---|
| WV NP NERI 107(3) | R05 |

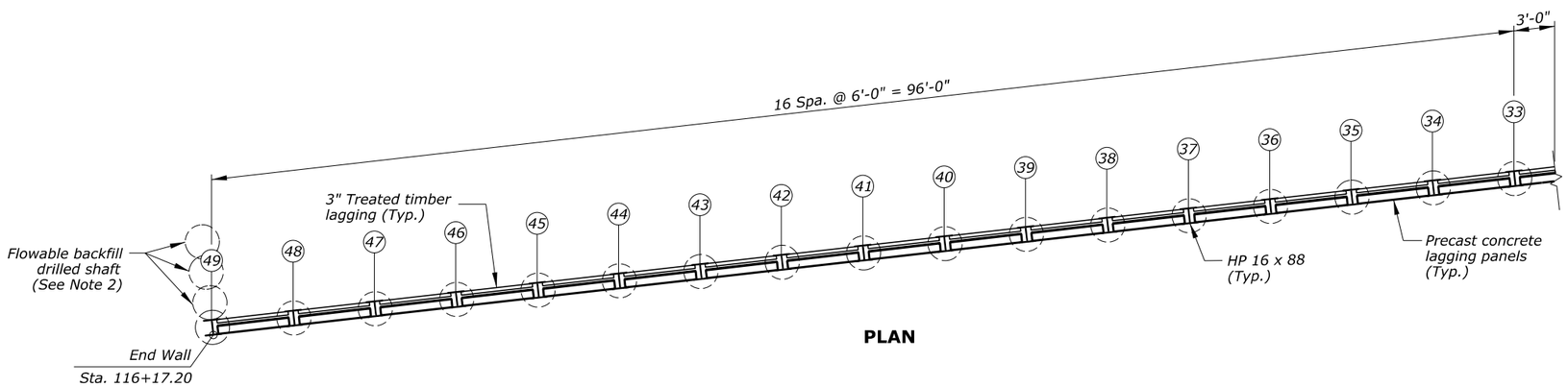


**PLAN**

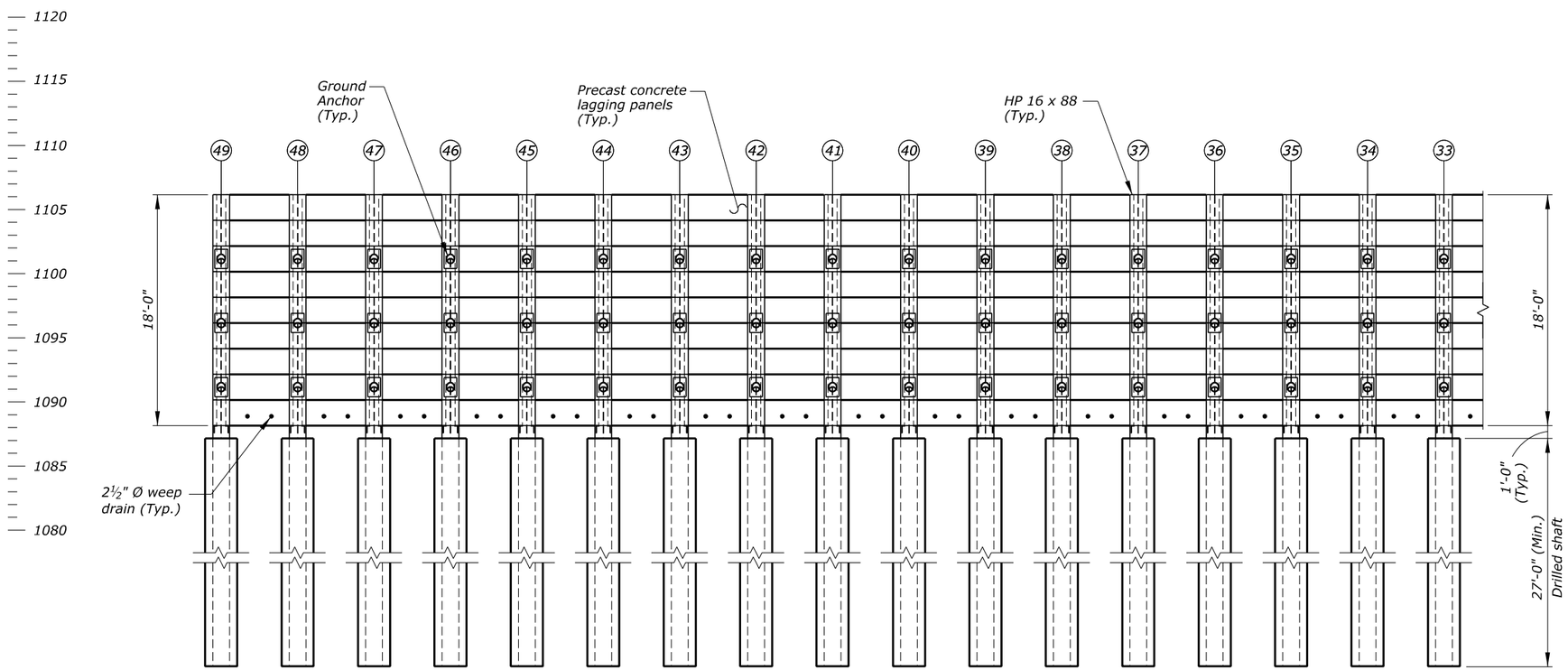


**ELEVATION**

*Notes:*

1. *See "ANCHOR DETAILS" sheet for additional information.*
2. *See "WALL DETAILS - 1", "WALL DETAILS - 2", "WALL DETAILS - 3", and "WALL DETAILS - 4" sheets for additional information.*
3. *See "PILE ELEVATIONS TABLE" sheet for pile stations and elevations.*
4. *Select drilling equipment and methods based on the expected subsurface conditions provided in the Geotechnical Data Report.*
5. *Identify ground anchor by the pile number and ground anchor number. Example for pile number 34 and ground anchor number 2, "Ground Anchor ID 34,2".*

| STRUCTURE NO. | STRUCTURE NAME | FEATURES INTERSECTED | LOCATION | U.S. DEPARTMENT OF TRANSPORTATION FEDERAL HIGHWAY ADMINISTRATION OFFICE OF FEDERAL LANDS HIGHWAY |
|---|---|---|---|---|
| | | | NEW RIVER GORGE NATIONAL PARK AND PRESERVE CUNARD RIVER ACCESS ROAD | |

| NO. | DATE | BY | REVISIONS | DESIGNED BY | DRAWN BY | CHECKED BY | PROJECT TEAM LEAD | SCALE | BRIDGE PLAN SHEET | DATE | RG / BRP NO. |
|---|---|---|---|---|---|---|---|---|---|---|---|
| | | | | BC | BC / JEG | LTE / SL | Carlos Peña-Marsh | 3/16" = 1'-0" | 5 of 12 | February 2026 | BRP-1345 |

# PLAN AND ELEVATION - 3

ACTUAL FILE:R05_neri 107(3)_P&E -3.DGN
M:\PROJECTS\neri\107(3)\Bridge\Microstation\Bridge Design Files\T02\R05_neri 107(3)_P&E -3.DGN
2/3/2026

| PROJECT | SHEET NUMBER |
|---|---|
| WV NP NERI 107(3) | R06 |

| Pile number | Station | Elevation A (ft.) | Elevation B (ft.) | Offset (ft.) | Angle, θ | Angle Detail |
|---|---|---|---|---|---|---|
| 1 | 113+18.47 | 1109.16 | 1090.16 | 30.15 | 1° 56′ 2.76″ | 1 |
| 2 | 113+24.46 | 1109.16 | 1090.16 | 30.34 | 1° 56′ 2.76″ | 1 |
| 3 | 113+30.46 | 1109.16 | 1090.16 | 30.55 | 1° 56′ 2.76″ | 1 |
| 4 | 113+36.45 | 1109.16 | 1090.16 | 30.75 | 1° 56′ 2.76″ | 1 |
| 5 | 113+42.45 | 1109.16 | 1090.16 | 30.95 | 1° 56′ 2.76″ | 1 |
| 6 | 113+48.44 | 1109.16 | 1090.16 | 31.16 | 1° 56′ 2.76″ | 1 |
| 7 | 113+54.44 | 1109.16 | 1090.16 | 31.35 | 1° 56′ 2.76″ | 1 |
| 8 | 113+60.92 | 1109.16 | 1090.16 | 31.52 | 1° 4′ 15.96″ | 1 |
| 9 | 113+67.55 | 1109.16 | 1090.16 | 31.58 | 0° 3′ 42.48″ | 2 |
| 10 | 113+74.17 | 1109.16 | 1090.16 | 31.51 | 1° 11′ 40.56″ | 2 |
| 11 | 113+80.79 | 1109.16 | 1090.16 | 31.32 | 2° 19′ 35.40″ | 2 |
| 12 | 113+87.40 | 1106.16 | 1087.16 | 31.02 | 3° 27′ 21.60″ | 2 |
| 13 | 113+93.99 | 1106.16 | 1087.16 | 30.60 | 4° 35′ 2.04″ | 2 |
| 14 | 114+00.56 | 1106.16 | 1087.16 | 30.06 | 5° 42′ 28.08″ | 2 |
| 15 | 114+07.10 | 1106.16 | 1087.16 | 29.41 | 6° 49′ 37.92″ | 2 |
| 16 | 114+13.62 | 1106.16 | 1087.16 | 28.64 | 7° 56′ 29.40″ | 2 |
| 17 | 114+20.10 | 1106.16 | 1087.16 | 27.75 | 9° 2′ 58.92″ | 2 |
| 18 | 114+26.54 | 1106.16 | 1087.16 | 26.75 | 10° 9′ 58.92″ | 2 |
| 19 | 114+33.04 | 1106.16 | 1087.16 | 26.67 | 11° 14′ 42.00″ | 2 |
| 20 | 114+39.56 | 1106.16 | 1087.16 | 26.57 | 12° 19′ 50.52″ | 2 |
| 21 | 114+46.06 | 1106.16 | 1087.16 | 26.36 | 2° 4′ 46.92″ | 2 |
| 22 | 114+52.57 | 1106.16 | 1087.16 | 26.03 | 6° 54′ 41.76″ | 1 |
| 23 | 114+59.05 | 1106.16 | 1087.16 | 25.59 | 5° 42′ 43.56″ | 1 |
| 24 | 114+65.50 | 1106.16 | 1087.16 | 25.15 | 4° 36′ 29.88″ | 1 |
| 25 | 114+71.98 | 1106.16 | 1087.16 | 25.55 | 3° 30′ 3.96″ | 1 |
| 26 | 114+78.47 | 1106.16 | 1087.16 | 25.84 | 2° 23′ 28.67″ | 1 |
| 27 | 114+86.21 | 1106.16 | 1087.16 | 26.04 | 1° 16′ 46.56″ | 1 |
| 28 | 114+92.21 | 1106.16 | 1087.16 | 26.08 | 0° 10″ 1.20″ | 1 |
| 29 | 114+98.21 | 1106.16 | 1087.16 | 26.02 | 0° 56′ 44.52″ | 2 |
| 30 | 115+03.24 | 1106.16 | 1087.16 | 25.85 | 1° 37′ 24.24″ | 2 |
| 31 | 115+09.24 | 1106.16 | 1087.16 | 25.69 | 1° 37′ 24.24″ | 2 |
| 32 | 115+15.24 | 1106.16 | 1087.16 | 25.52 | 1° 37′ 24.24″ | 2 |
| 33 | 115+21.24 | 1106.16 | 1087.16 | 25.34 | 1° 37′ 24.24″ | 2 |
| 34 | 115+27.23 | 1106.16 | 1087.16 | 25.18 | 1° 37′ 24.24″ | 2 |
| 35 | 115+33.23 | 1106.16 | 1087.16 | 25.01 | 1° 37′ 24.24″ | 2 |
| 36 | 115+39.23 | 1106.16 | 1087.16 | 24.83 | 1° 37′ 24.24″ | 2 |
| 37 | 115+45.23 | 1106.16 | 1087.16 | 24.67 | 1° 37′ 24.24″ | 2 |
| 38 | 115+51.22 | 1106.16 | 1087.16 | 24.50 | 1° 37′ 24.24″ | 2 |
| 39 | 115+57.22 | 1106.16 | 1087.16 | 24.32 | 1° 37′ 24.24″ | 2 |
| 40 | 115+63.22 | 1106.16 | 1087.16 | 24.16 | 1° 37′ 24.24″ | 2 |
| 41 | 115+69.22 | 1106.16 | 1087.16 | 23.99 | 1° 37′ 24.24″ | 2 |
| 42 | 115+75.22 | 1106.16 | 1087.16 | 23.82 | 1° 37′ 24.24″ | 2 |
| 43 | 115+81.21 | 1106.16 | 1087.16 | 23.65 | 1° 37′ 24.24″ | 2 |
| 44 | 115+87.21 | 1106.16 | 1087.16 | 23.48 | 1° 37′ 24.24″ | 2 |
| 45 | 115+93.21 | 1106.16 | 1087.16 | 23.31 | 1° 37′ 24.24″ | 2 |
| 46 | 115+99.21 | 1106.16 | 1087.16 | 23.14 | 1° 37′ 24.24″ | 2 |
| 47 | 116+05.20 | 1106.16 | 1087.16 | 22.97 | 1° 37′ 24.24″ | 2 |
| 48 | 116+11.20 | 1106.16 | 1087.16 | 22.80 | 1° 37′ 24.24″ | 2 |
| 49 | 116+17.20 | 1106.16 | 1087.16 | 22.63 | 1° 37′ 24.24″ | 2 |

Notes:

1. Verify and obtain CO's approval for pile location and elevations.
2. Select drilling equipment and methods based on the expected subsurface conditions provided in the Geotechnical Data Report.

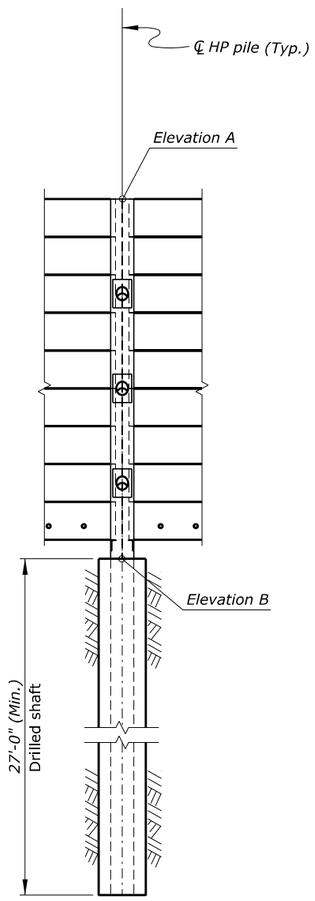


**TYPICAL ELEVATION**
Scale: ¼" = 1'-0"

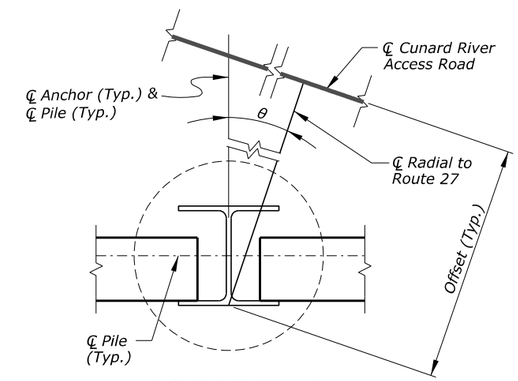


**ANGLE DETAIL - 1**
Not to Scale

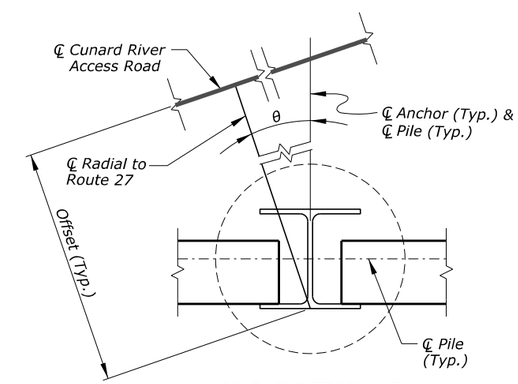


**ANGLE DETAIL - 2**
Not to Scale

| STRUCTURE NO. | STRUCTURE NAME | FEATURES INTERSECTED | LOCATION | U.S. DEPARTMENT OF TRANSPORTATION FEDERAL HIGHWAY ADMINISTRATION OFFICE OF FEDERAL LANDS HIGHWAY |
|---|---|---|---|---|
| | | | NEW RIVER GORGE NATIONAL PARK AND PRESERVE CUNARD RIVER ACCESS ROAD | |

| NO. | DATE | BY | REVISIONS | DESIGNED BY | DRAWN BY | CHECKED BY | PROJECT TEAM LEAD | SCALE | BRIDGE PLAN SHEET | DATE | RG / BRP NO. |
|---|---|---|---|---|---|---|---|---|---|---|---|
| | | | | BC | BC / JEG | LTE / SL | Carlos Peña-Marsh | As Shown | 6 of 12 | February 2026 | BRP-1345 |

# PILE ELEVATIONS TABLE

ACTUAL FILE:R06_neri 107(3)_PILE ELEVATIONS TABLE.DGN
M:\PROJECTS\neri\107(3)\Bridge\Microstation\Bridge Design Files\702\R06_neri 107(3)_PILE ELEVATIONS TABLE.DGN
2/3/2026

| PROJECT | SHEET NUMBER |
|---|---|
| WV NP NERI 107(3) | R07 |

*Notes:*

1. *See "WALL DETAILS - 3" and "WALL DETAILS - 4" sheets for additional information.*

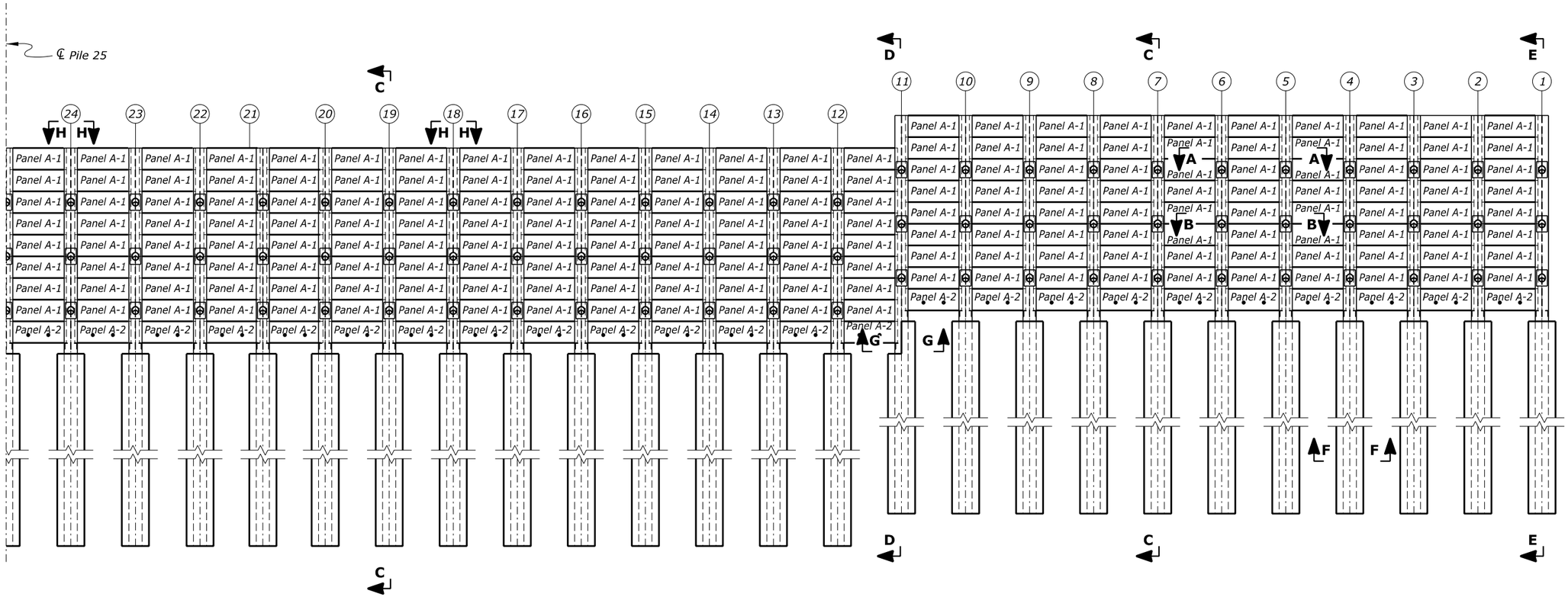


*Key:*

*Pile Number = (16)*

| STRUCTURE NO. | STRUCTURE NAME | FEATURES INTERSECTED | LOCATION | U.S. DEPARTMENT OF TRANSPORTATION FEDERAL HIGHWAY ADMINISTRATION OFFICE OF FEDERAL LANDS HIGHWAY |
|---|---|---|---|---|
| | | | NEW RIVER GORGE NATIONAL PARK AND PRESERVE CUNARD RIVER ACCESS ROAD | |

| NO. | DATE | BY | REVISIONS | DESIGNED BY | DRAWN BY | CHECKED BY | PROJECT TEAM LEAD | SCALE | BRIDGE PLAN SHEET | DATE | RG / BRP NO. |
|---|---|---|---|---|---|---|---|---|---|---|---|
| | | | | BC | BC / JEG | LTE / SL | Carlos Peña-Marsh | 3/16" = 1'-0" | 7 of 12 | February 2026 | BRP-1345 |

# WALL DETAILS - 1

ACTUAL FILE:R07_neri 107(3)_WALL DETAILS 1.DGN
M:\PROJECTS\neri\107(3)\Bridge\Microstation\Bridge Design Files\701\R07_neri 107(3)_WALL DETAILS 1.DGN
2/3/2026

| PROJECT | SHEET NUMBER |
|---|---|
| WV NP NERI 107(3) | R08 |

*Notes:*

1. *See "WALL DETAILS - 3" and "WALL DETAILS - 4" sheets for additional information.*

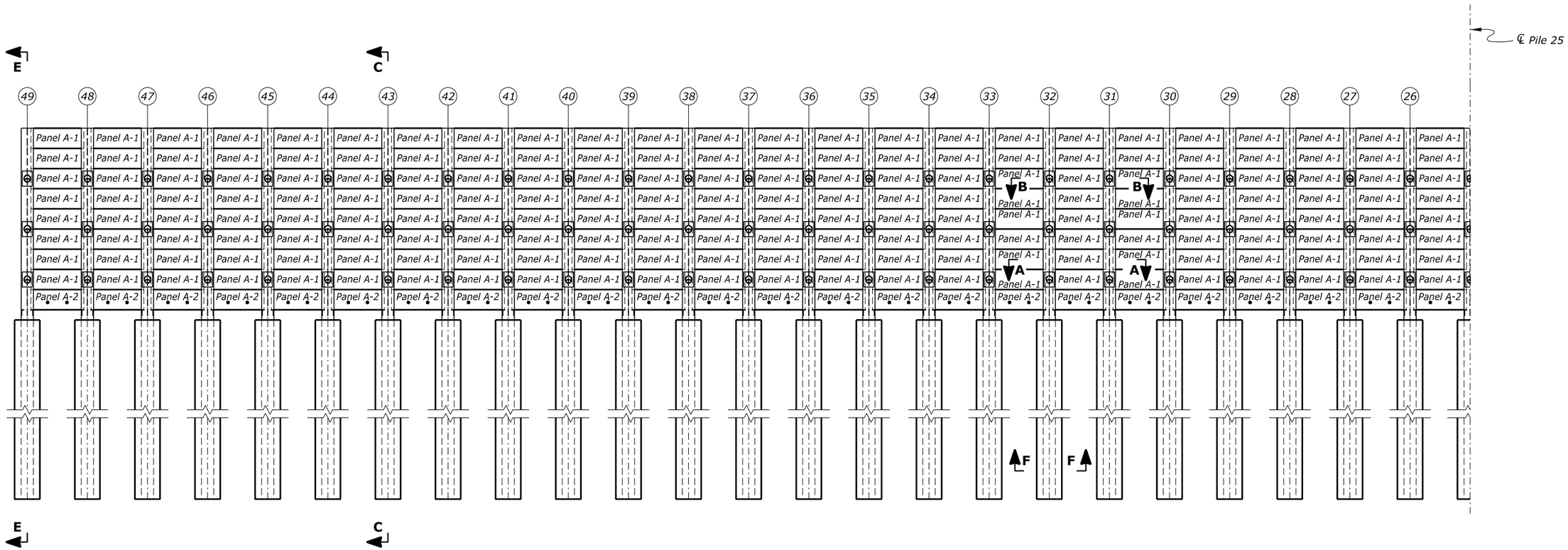


*Key:*

*Pile Number =* (16)

| STRUCTURE NO. | STRUCTURE NAME | FEATURES INTERSECTED | LOCATION | U.S. DEPARTMENT OF TRANSPORTATION FEDERAL HIGHWAY ADMINISTRATION OFFICE OF FEDERAL LANDS HIGHWAY |
|---|---|---|---|---|
| | | | NEW RIVER GORGE NATIONAL PARK AND PRESERVE CUNARD RIVER ACCESS ROAD | |

| NO. | DATE | BY | REVISIONS |
|---|---|---|---|
| | | | |

| DESIGNED BY | DRAWN BY | CHECKED BY | PROJECT TEAM LEAD | SCALE | BRIDGE PLAN SHEET | DATE | RG / BRP NO. |
|---|---|---|---|---|---|---|---|
| BC | BC / JEG | LTE / SL | Carlos Peña-Marsh | 3/16" = 1'-0" | 8 of 12 | February 2026 | BRP-1345 |

# WALL DETAILS - 2

ACTUAL FILE:R08_neri 107(3)_WALL DETAILS 2.DGN
M:\PROJECTS\neri\107(3)\Bridge\Microstation\Bridge Design Files\701\R08_neri 107(3)_WALL DETAILS 2.DGN
2/3/2026

| PROJECT | SHEET NUMBER |
|---|---|
| WV NP NERI 107(3) | R09 |

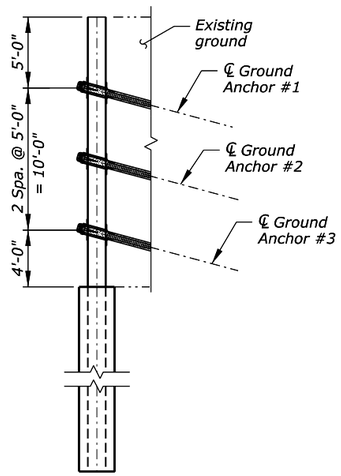


**SECTION C-C**
Scale: 3/16" = 1'-0"
*(Piles 2-10, 12-48)*

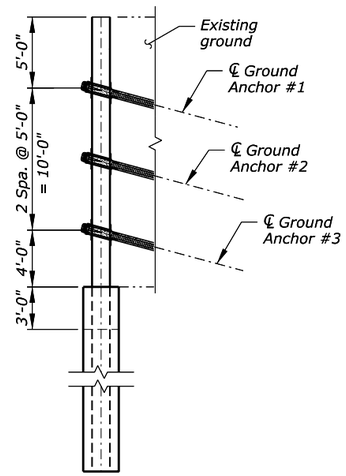


**SECTION D-D**
Scale: 3/16" = 1'-0"
*(Pile 11)*

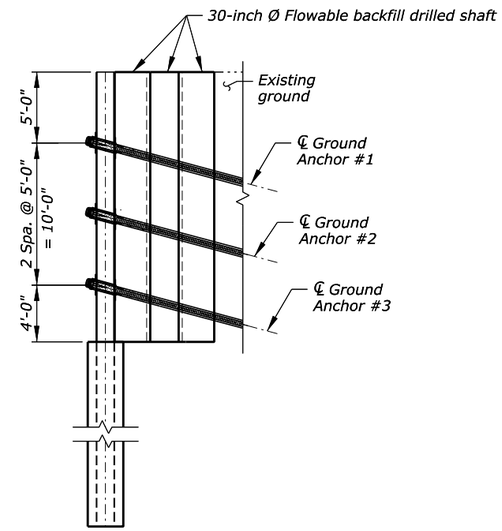


**SECTION E-E**
Scale: 3/16" = 1'-0"
*(Pile 1 and 49)*

*Notes:*

1. *See "ANCHOR DETAILS" sheet for additional ground anchor details.*
2. *Provide underdrain backfill conforming to AASHTO M 43, size number 67, for voids between geotextile filter and timber lagging.*
3. *Provide geotextile filter conforming to Subsection 714.01(c).*
4. *Select drilling equipment and methods for drilled shaft and pile installation based on the expected subsurface condition as shown in the Geotechnical Report.*
5. *Construct anchored soldier pile wall according to Sections 254, 256, and 565.*

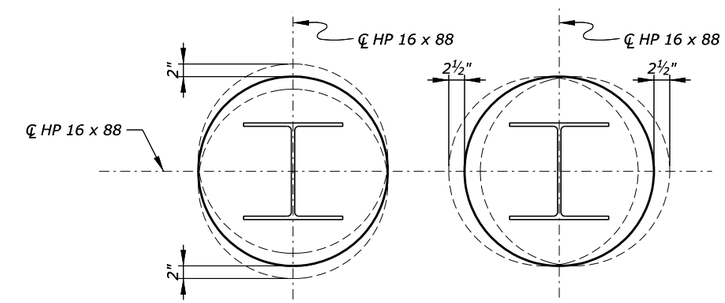


**SOLDIER PILE TOLERANCE**
Scale: 1" = 1'-0"

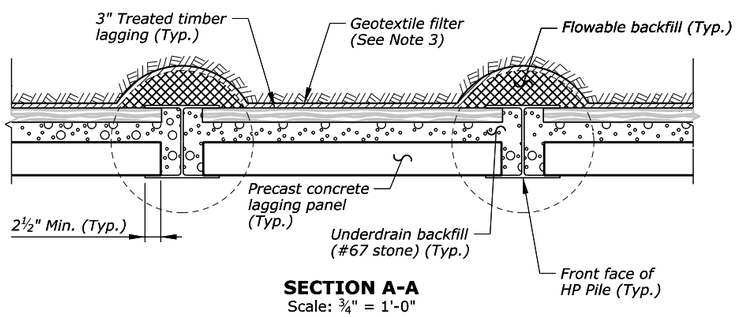


**SECTION A-A**
Scale: 3/4" = 1'-0"

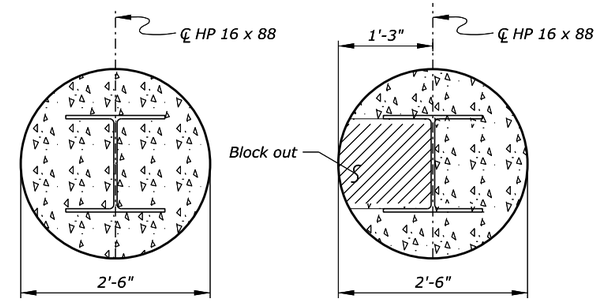


**SECTION F-F**
Scale: 1" = 1'-0"

**SECTION G-G**
Scale: 1" = 1'-0"

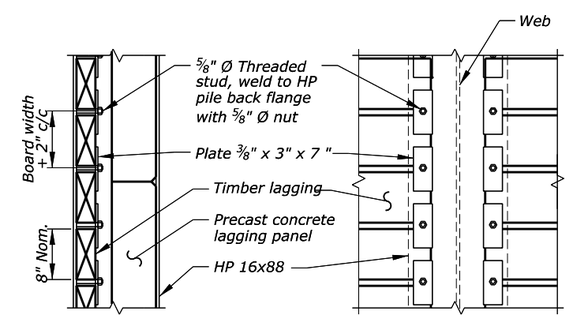


**LAGGING STUD DETAIL**
Scale: 1" = 1'-0"

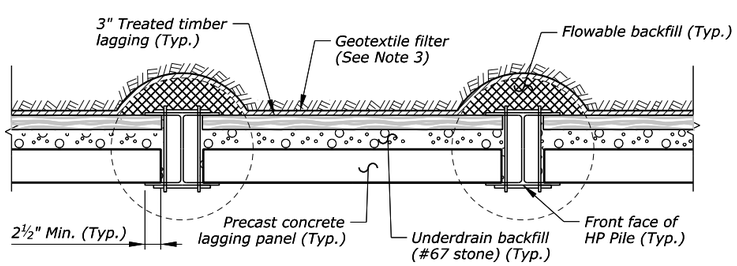


**SECTION B-B**
Scale: 3/4" = 1'-0"

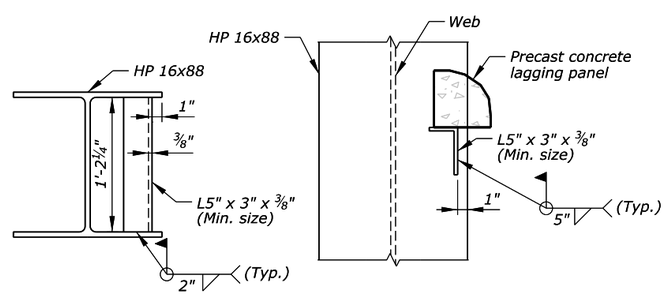


**PRECAST PANEL SEAT DETAIL**
Scale: 1½" = 1'-0"

| STRUCTURE NO. | STRUCTURE NAME | FEATURES INTERSECTED | LOCATION | U.S. DEPARTMENT OF TRANSPORTATION FEDERAL HIGHWAY ADMINISTRATION OFFICE OF FEDERAL LANDS HIGHWAY |
|---|---|---|---|---|
| | | | NEW RIVER GORGE NATIONAL PARK AND PRESERVE CUNARD RIVER ACCESS ROAD | |

| NO. | DATE | BY | REVISIONS | DESIGNED BY | DRAWN BY | CHECKED BY | PROJECT TEAM LEAD | SCALE | BRIDGE PLAN SHEET | DATE | RG / BRP NO. |
|---|---|---|---|---|---|---|---|---|---|---|---|
| | | | | BC | BC / JEG | LTE / SL | Carlos Peña-Marsh | As Shown | 9 of 12 | February 2026 | BRP-1345 |

# WALL DETAILS - 3

ACTUAL FILE:R09_neri 107(3)_WALL DETAILS 3.DGN
M:\PROJECTS\neri\107(3)\Bridge\Microstation\Bridge Design Files\70X\R09_neri 107(3)_WALL DETAILS 3.DGN
2/3/2026

*Notes:*

1. *Adjust weep hole location to avoid interference with reinforcement.*
2. *Provide geotextile filter conforming to Subsection 714.01(c).*
3. *Install neoprene pad between concrete lagging and steel flange. Apply epoxy between neoprene pad and steel flange according to the manufacturer's recommendation and approved by the CO.*

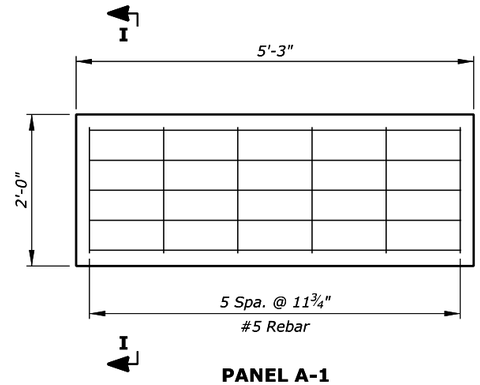


**PANEL A-1**
*Scale: 1" = 1'-0"*

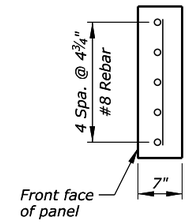


**SECTION I-I**
*Scale: 1" = 1'-0"*

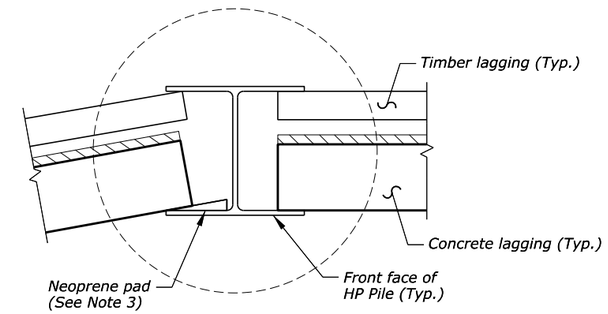


**Section H-H**
*(Pile 18, Pile 24 Similar)*
*Scale: 1½" = 1'-0"*

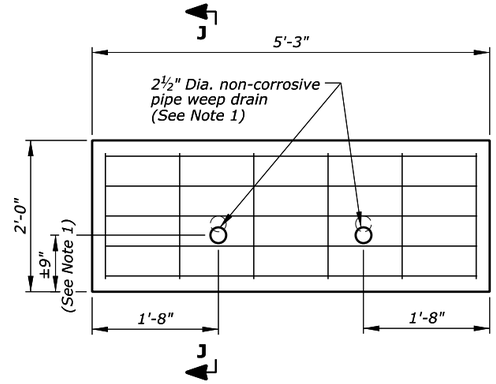


**PANEL A-2**
*Scale: 1" = 1'-0"*

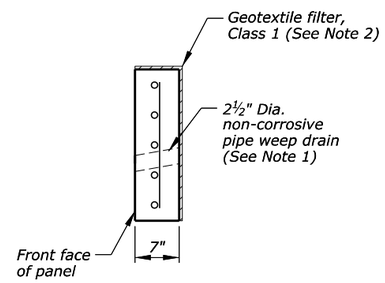


**SECTION J-J**
*Scale: 1" = 1'-0"*

| PROJECT | SHEET NUMBER |
|---|---|
| WV NP NERI 107(3) | R11 |

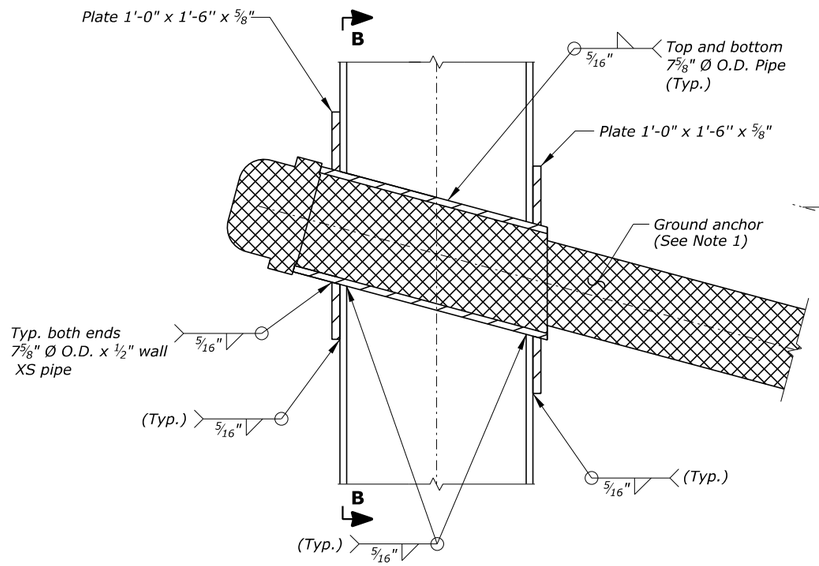


**ANCHOR DETAIL**
*SCALE: 2" = 1'-0"*

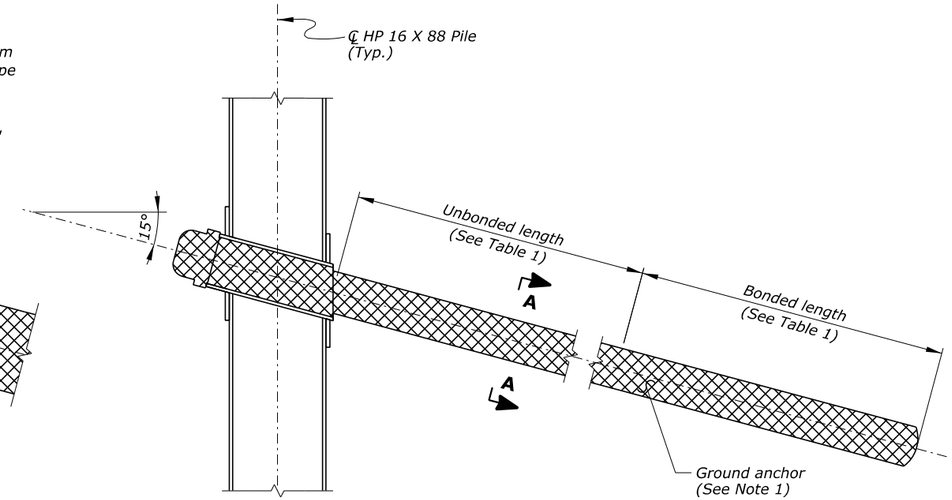


**TYPICAL ANCHOR SECTION**
*SCALE: 1" = 1'-0"*

*Notes:*

1. *Submit anchor system design in accordance with Subsection 256.04 and approval by the CO.*
2. *Use AASHTO M 203 low-relaxation, seven wire strands (Fpu = 270 KSI, nominal As = 0.217 sq. in. per 7-wire strand) or AASHTO M 275 high-strength steel bars.*
3. *Provided minimum anchor bond lengths are estimates only. Adjust anchor bond length in the field based on verification and proof test results and at the approval of the CO.*
4. *Select drilling equipment and methods based on the expected subsurface conditions provided in the Geotechnical Data Report. Provide anchor bond zone length and diameter that meet or exceed the required anchor resistance. All equipment and methods are subject to approval by the CO.*
5. *Use galvanized steel for all components.*
6. *Tension anchors according to "TABLE 2 - FACTORED DESIGN LOAD".*
7. *Welding for the 1'-0" x 1'-6" x 5/8" plate and 7 5/8" Ø O.D. XS pipe to the HP 14 x 73 are to be shop welds.*

**TABLE - 1**

| Minimum anchor unbonded length (ft) | Minimum anchor bonded length (ft) | Minimum Drill hole diameter (in) |
|---|---|---|
| 20 | 30 | 6.5 |

**TABLE 2 - FACTORED DESIGN LOAD**

| | Anchor #1 | Anchor #2 | Anchor #3 |
|---|---|---|---|
| Piles 1 - 49 | 75 Kips | 55 Kips | 50 Kips |

**Lockoff Load = 1.0 * Factored Design Load*

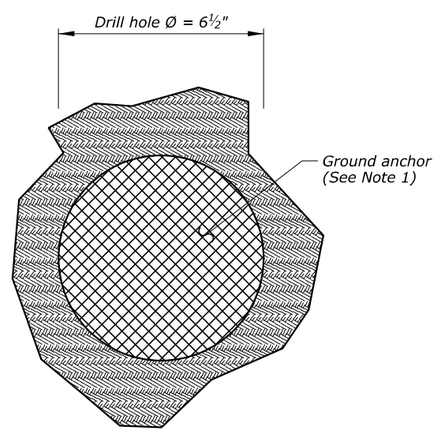


**SECTION A-A**
*Not to Scale*

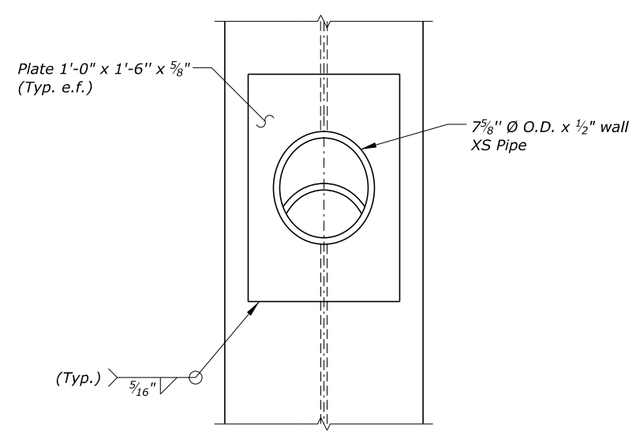


**SECTION B-B**
*SCALE: 2" = 1'-0"*
*(Anchor not shown for clarity)*

LEGEND

*Ground anchor system (See Note 1)*

| STRUCTURE NO. | STRUCTURE NAME | FEATURES INTERSECTED | LOCATION | U.S. DEPARTMENT OF TRANSPORTATION FEDERAL HIGHWAY ADMINISTRATION OFFICE OF FEDERAL LANDS HIGHWAY |
|---|---|---|---|---|
| | | | NEW RIVER GORGE NATIONAL PARK AND PRESERVE CUNARD RIVER ACCESS ROAD | |

| NO. | DATE | BY | REVISIONS | DESIGNED BY | DRAWN BY | CHECKED BY | PROJECT TEAM LEAD | SCALE | BRIDGE PLAN SHEET | DATE | RG / BRP NO. |
|---|---|---|---|---|---|---|---|---|---|---|---|
| | | | | BC | BC / JEG | LTE / SL | Carlos Peña-Marsh | As Shown | 11 of 12 | February 2026 | BRP-1345 |

# ANCHOR DETAILS

ACTUAL FILE:R11_neri 107(3)_ANCHOR DETAILS.DGN
M:\PROJECTS\neri\107(3)\Bridge\Microstation\Bridge Design Files\95X\R11_neri 107(3)_ANCHOR DETAILS.DGN
2/3/2026

| PROJECT | SHEET NUMBER |
|---|---|
| WV NP NERI 107(3) | R12 |

NERI 107(2) New River Gorge National Park
Cunard River Access and Glade Creek Road | Fayetteville, West Virginia
Terracon Project No, N22250S0

Terracon
912 Morris St
Charleston, WV

## Boring Log No. BH22-06

Location: See Exploration Plan
Northing: 364020.063 Easting: 1961663.196
Depth (Ft.) Elevation.: 1111.3 (Ft.)

| Graphic Log | Depth (Ft.) | Water Level Observations | Sample Type | Recovery (In.) | Field Test Results | RECOVERY (ft) | RQD (ft) | Water Content (%) | Atterberg Limits LL-PL-PI | RQD (%) |
|---|---|---|---|---|---|---|---|---|---|---|
| **AGGREGATE BASE COURSE**, silty sand with gravel, dense graded aggregate | | | | | | | | | | |
| | | ▽ | | 14 | 12-7-10 N=17 | | | 4.6 | | |
| | 5.0 / 1106.3 | | | | | | | | | |
| **CLAYEY SAND (SC)**, brown, medium dense | 5 | | | 12 | 16-16-8 N=24 | | | 6.9 | 27-19-8 | |
| | 7.5 / 1103.8 | | | | | | | | | |
| **SANDY SILT (SM)**, brown, very stiff | | | | 12 | 7-6-9 N=15 | | | 11.8 | NP | |
| | 10 | | | | | | | | | |
| | 11.0 / 1100.3 | | | 18 | 10-15-27 N=42 | | | | | |
| **SILTY SHALE**, with sand, gray, medium dense to dense | 12.0 / 1099.3 | | | | | | | | | |
| **SILTSTONE**, extremely to moderately fractured, close to moderate fracture spacing, medium bedding, highly to moderately weathered, medium strong, highly fractured from 15.1 ft to 18.2 ft discontinuity angle ranging from 45 deg to 60 deg | | | | 5 | 50/5" | | | | | |
| | 15 | | | 0 | 50/1" | 1.5 | | | | |
| 18 ft: Unconfined compressive strength = 3,702 psi -Clay interbedded with at 16.3 ft | 20 | | | | | 5.0 | 2.1 | | | 42 |
| | 21.6 / 1089.7 | | | | | | | | | |
| ***Boring Terminated at 21.6 Feet*** | | | | | | | | | | |

See Exploration and Testing Procedures for a description of field and laboratory procedures used and additional data (If any).
See Supporting Information for explanation of symbols and abbreviations.

**Water Level Observations**
▽ 3.4 ft: at completion of drilling

**Notes**

**Advancement Method**
3.25" Hollow Stem Auger/NQ2

**Abandonment Method**
Boring backfilled with auger cuttings and surface capped with gravel

**Drill Rig** CME 55S
**Hammer Type** Automatic
**Driller** L.Slate
**Logged by** J.Tower
**Boring Started** 09-08-2022
**Boring Completed** 09-08-2022

PAGE A - 57

Facilities | Environmental | **Geotechnical** | Materials

NERI 107(2) New River Gorge National Park
Cunard River Access and Glade Creek Road | Fayetteville, West Virginia
Terracon Project No, N22250S0

Terracon
912 Morris St
Charleston, WV

## Boring Log No. BH22-05

Location: See Exploration Plan
Northing: 363859.677 Easting: 1961673.025
Depth (Ft.) Elevation.: 1108.6 (Ft.)

| Graphic Log | Depth (Ft.) | Water Level Observations | Sample Type | Recovery (In.) | Field Test Results | RECOVERY (ft) | RQD (ft) | Water Content (%) | Atterberg Limits LL-PL-PI | RQD (%) |
|---|---|---|---|---|---|---|---|---|---|---|
| 0.5 **ASPHALT** | 1108.1 | | | | | | | | | |
| **AGGREGATE BASE COURSE** | | | | 8 | 9-8-12 N=20 | | | | | |
| | | | | 13 | 12-13-8 N=21 | | | 5.9 | | |
| | 5.5 / 1103.1 | | | | | | | | | |
| **FILL - SILTY SAND WITH GRAVEL**, brown, loose | | | | 9 | 3-3-4 N=7 | | | 13.5 | NP | |
| | 8.0 / 1100.6 | | | | | | | | | |
| **SILTY GRAVEL WITH SAND (GM)**, brown, medium dense to dense, boulders encountered throughout | | | | 5 | 36-50/4" | | | | | |
| | | | | 1 | 50/1" | 1.2 | | | | |
| | | | | 7 | 4-7-11 N=18 | | | 13.2 | NP | |
| | | | | | | 1.1 | | | | |
| | 15.6 / 1093 | | | | | | | | | |
| **SILTY SAND WITH GRAVEL (SM)**, brown, loose, cobbles and boulders encountered throughout | | | | 4 | 4-6-4 N=8 | | | 14.1 | NP | |
| | | | | | | 1.3 | | | | |
| | 20.6 / 1088 | ▽ | | | | | | | | |
| 21.1 **SANDY SHALE**, brown, dense | 1087.5 | | | 0.5 | 50 | | | | | |
| **SANDSTONE**, brown, moderately fractured, close to moderate spacing, medium bedding, moderately weathered, medium strong | | | | | | 3.4 | 1.1 | | | 31 |
| 23 ft: Unconfined compressive strength = 13,583 psi | | | | | | | | | | |
| | 24.6 / 1084 | | | | | | | | | |
| ***Boring Terminated at 24.6 Feet*** | | | | | | | | | | |

See Exploration and Testing Procedures for a description of field and laboratory procedures used and additional data (If any).
See Supporting Information for explanation of symbols and abbreviations.

**Water Level Observations**
▽ 20.5 ft: at completion of drilling

**Notes**
Rock coring was required to penetrate boulders from 11.1 feet after auger refusal was encountered

**Advancement Method**
3.25" Hollow Stem Auger/NQ2

**Abandonment Method**
Boring backfilled with auger cuttings and surface capped with asphalt

**Drill Rig** CME 55S
**Hammer Type** Automatic
**Driller** L.Slate
**Logged by** J.Tower
**Boring Started** 09-08-2022
**Boring Completed** 09-08-2022

PAGE A - 56

Facilities | Environmental | **Geotechnical** | Materials

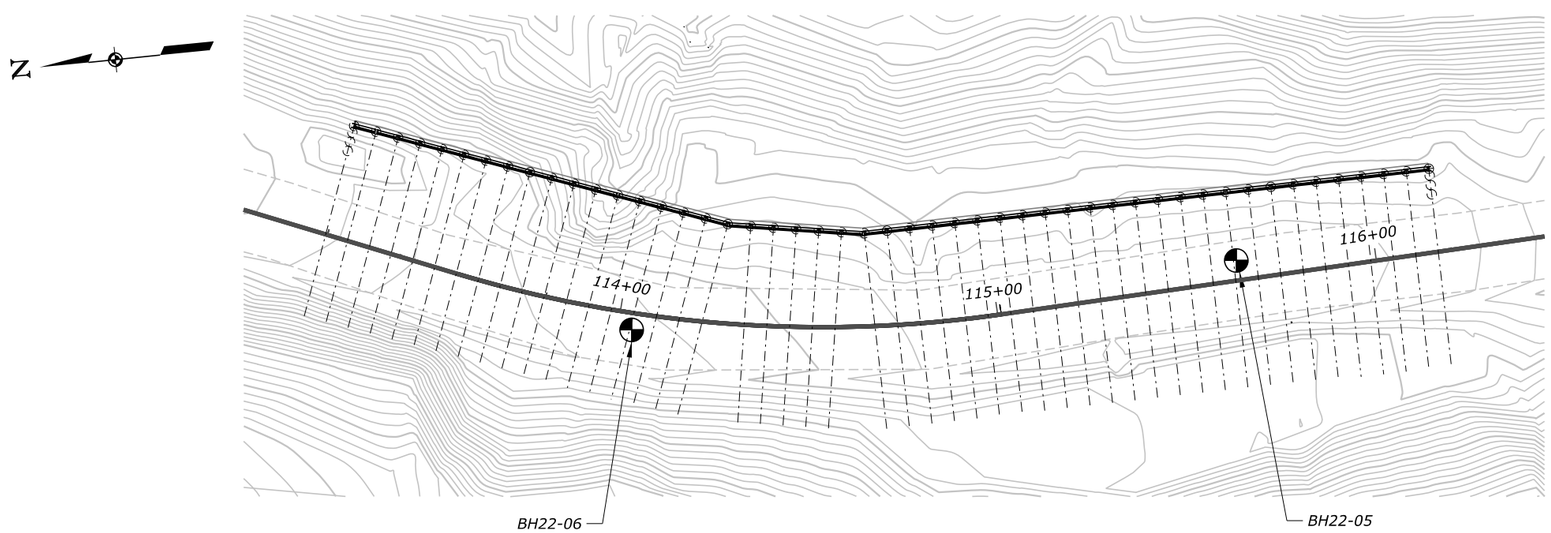


BORING LOG KEY

| STRUCTURE NO. | STRUCTURE NAME | FEATURES INTERSECTED | LOCATION | U.S. DEPARTMENT OF TRANSPORTATION FEDERAL HIGHWAY ADMINISTRATION OFFICE OF FEDERAL LANDS HIGHWAY |
|---|---|---|---|---|
| | | | NEW RIVER GORGE NATIONAL PARK AND PRESERVE CUNARD RIVER ACCESS ROAD | |

| NO. | DATE | BY | REVISIONS | DESIGNED BY | DRAWN BY | CHECKED BY | PROJECT TEAM LEAD | SCALE | BRIDGE PLAN SHEET | DATE | RG / BRP NO. |
|---|---|---|---|---|---|---|---|---|---|---|---|
| | | | | BC | BC / JEG | LTE / SL | Carlos Peña-Marsh | No Scale | 12 of 12 | February 2026 | BRP-1345 |

# BORING LOG

ACTUAL FILE:R12_neri 107(3)_BORING LOG.DGN
M:\PROJECTS\neri\107(3)\Bridge\Microstation\Bridge Design Files\95%\R12_neri 107(3)_BORING LOG.DGN
2/3/2026

| PROJECT | SHEET NUMBER |
|---|---|
| WV NP NERI 107(3) | S01 |

## NOTES:

1. *Construct drainage ditches along the stabilized construction exit when required. Install temporary 18-inch pipe culverts where the stabilized construction exit crosses existing drainage ditches.*
2. *Place stabilization geotextile, Class 1, conforming to Subsection 714.01(b) over the entire area prior to placing the aggregate.*

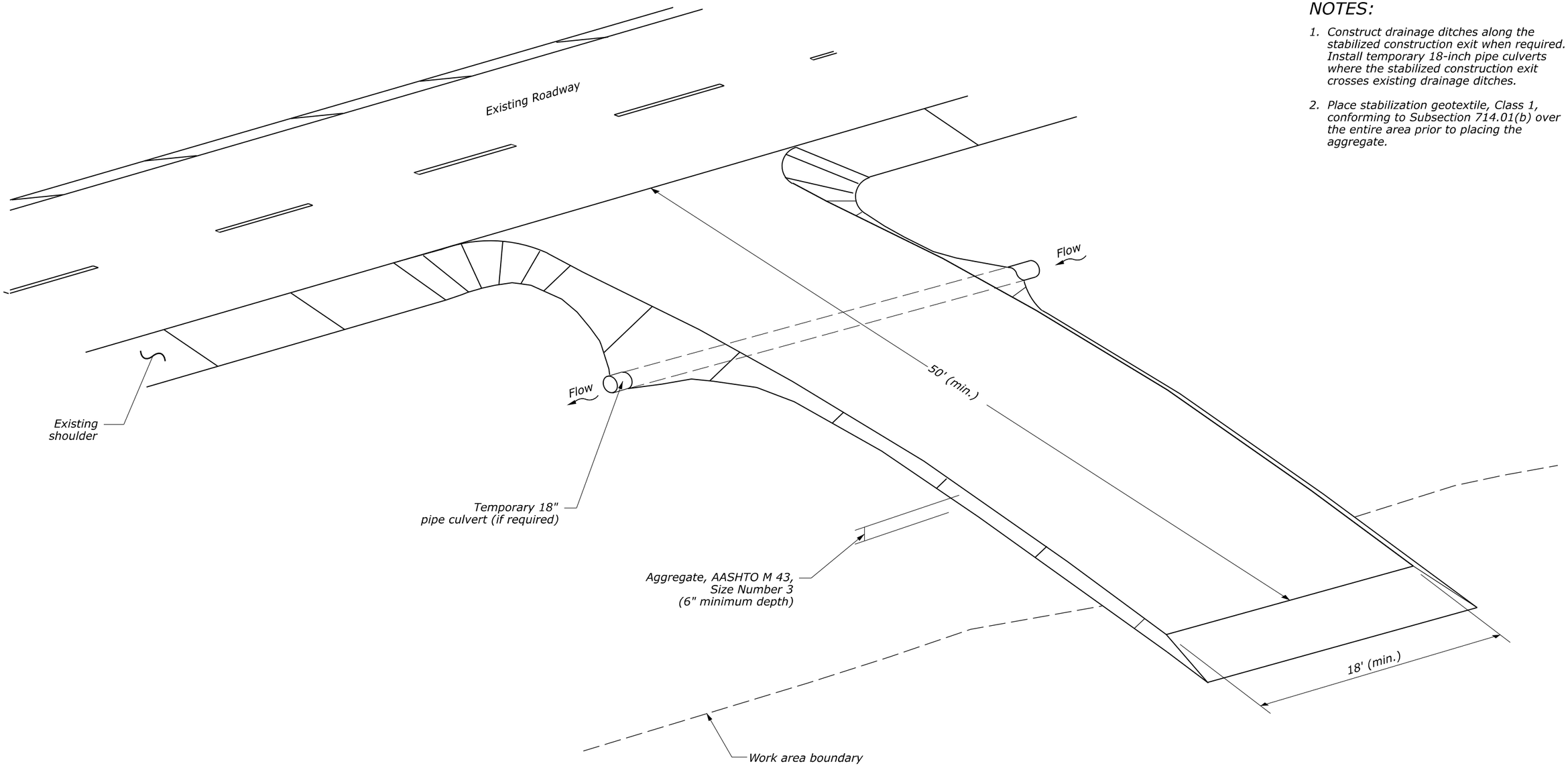


NO SCALE

U.S. DEPARTMENT OF TRANSPORTATION, FHWA
OFFICE OF FEDERAL LANDS HIGHWAY

**STABILIZED CONSTRUCTION EXIT**

EFLHD DETAIL
E157-01

SPECIFICATION
FP-24

APPROVED FOR USE
05/2024

9 February 2026 2:23 PM M:\PROJECTS\nerl\107(3)\HWY_DES\CADD\Std-Det\S01-E157-01.dgn [Sheet]

| PROJECT | SHEET NUMBER |
|---|---|
| DC NP ROCR BMS(1) | S02 |

## NOTE:

1. For gravel filters use 2" to 3" diameter coarse aggregate.
2. Use wire mesh with ½" x ½" openings.
3. Use type A inlet protection in sump locations only.
4. Use type B inlet protection only in sump locations where heavy concentrated flows are not expected. Do not use where ponding around the structure might cause inconvenience or damage.
5. Provide silt fence drop inlet protection geotextile conforming to subsection 713.16(a).

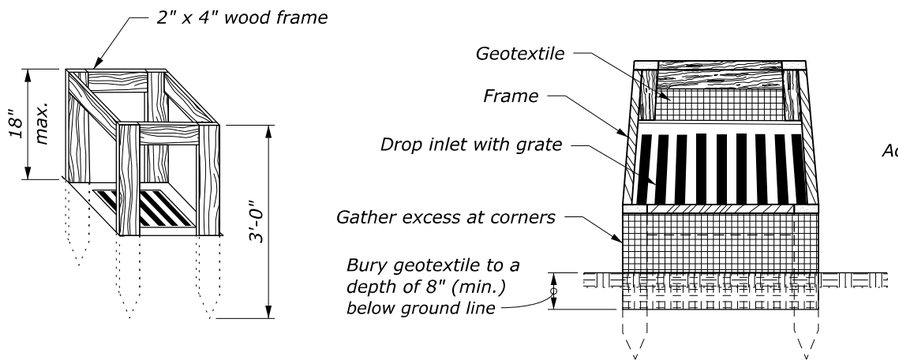


**SILT FENCE DROP INLET PROTECTION (TYPE A)**

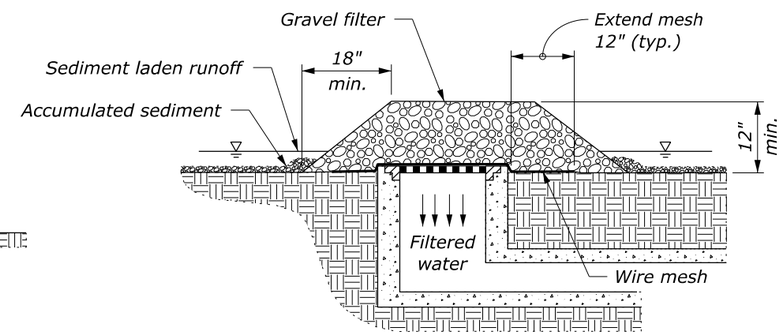


**GRAVEL AND WIRE MESH DROP INLET PROTECTION (TYPE B)**

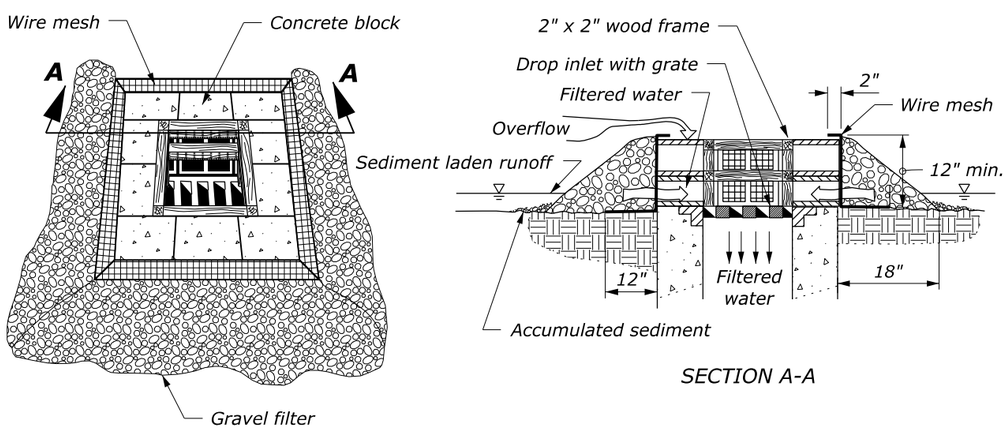


SECTION A-A

**BLOCK AND GRAVEL DROP INLET PROTECTION (TYPE C)**

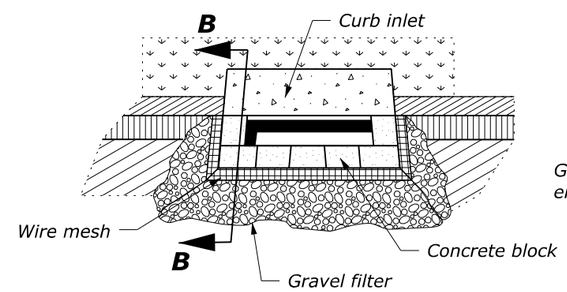


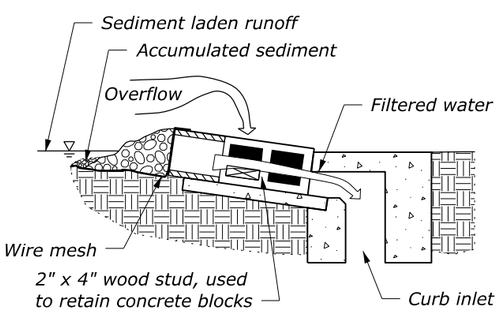


SECTION B-B

**CURB INLET PROTECTION, BLOCK AND GRAVEL (TYPE D)**

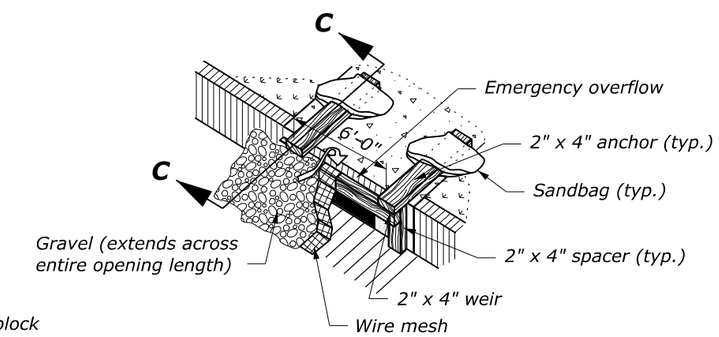


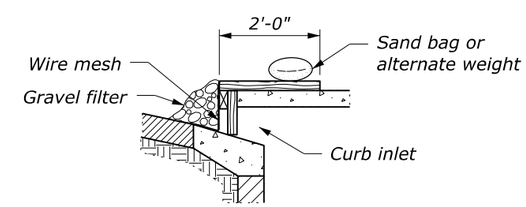


SECTION C-C

**CURB INLET PROTECTION, WOODEN WEIR (TYPE E)**

NO SCALE

| U.S. DEPARTMENT OF TRANSPORTATION, FHWA<br>OFFICE OF FEDERAL LANDS HIGHWAY | FLH STANDARD<br>157-2 |
|---|---|
| **TEMPORARY INLET PROTECTION** | SPECIFICATION<br>FP-24, FP-14 |
| | APPROVED FOR USE<br>1/2024 |

M:\PROJECTS\nerfl\107(3)\HWY_DES\CADD\Std-Det\S02-Std157-2.dgn [Std 157-2]
5 August 2025 8:28 AM

| PROJECT | SHEET NUMBER |
|---|---|
| WV NP NERI 107(3) | S03 |

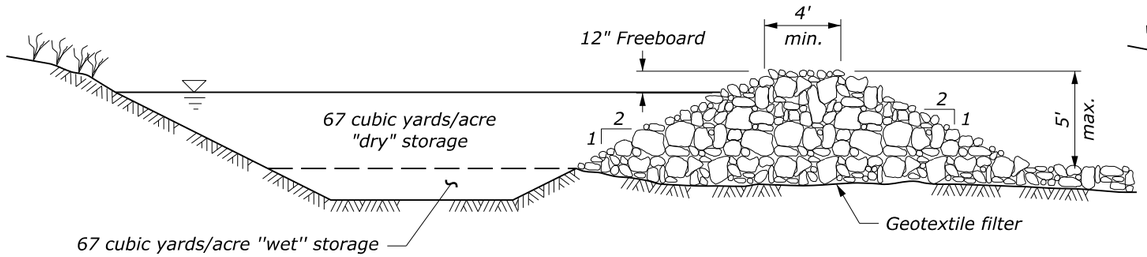


CROSS SECTION THROUGH SPILLWAY

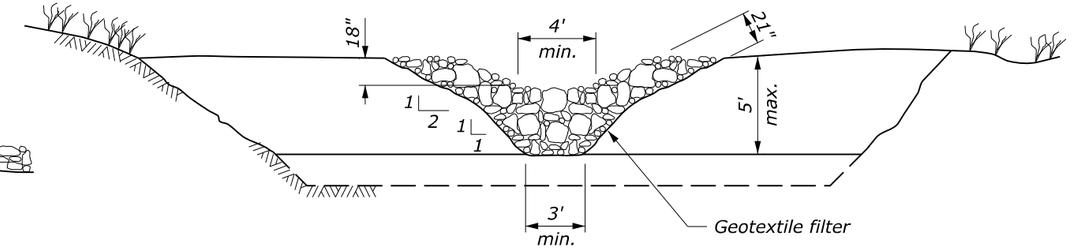


ELEVATION

## SEDIMENT TRAP (TYPE A) RIPRAP OUTLET

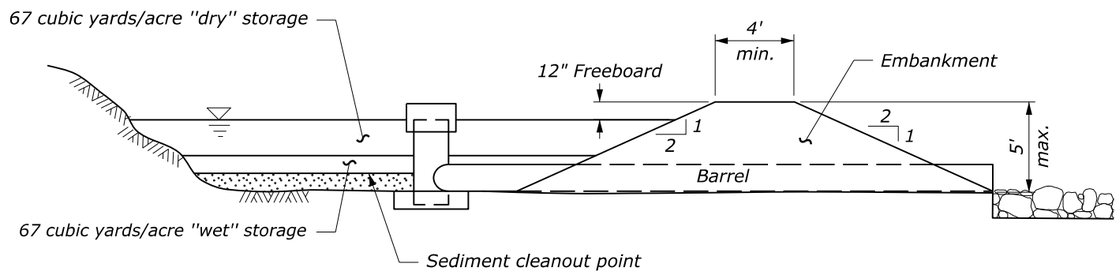


CROSS SECTION

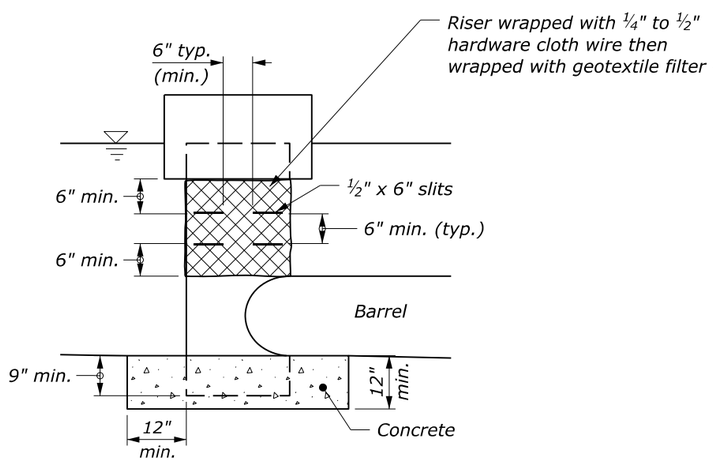


CONCRETE BASE
WITH SLIT PERFORATIONS IN RISER

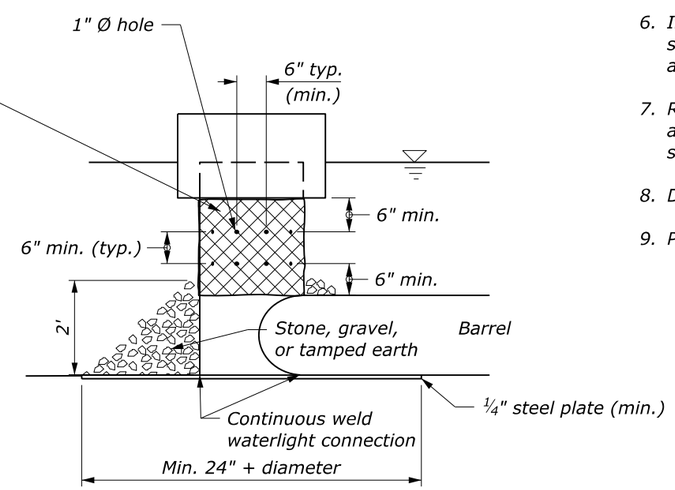


STEEL PLATE BASE
WITH HOLE PERFORATIONS IN RISER

## SEDIMENT TRAP (TYPE B) PIPE OUTLET

NOTE:

1. Clear, grub, and remove all vegetative matter including root mat before constructing sediment trap.
2. Remove vegetative matter, other organic material, and large stones from embankment fill material.
3. Compact embankment in 8-inch layers using construction equipment for compaction of each layer.
4. Seed the soil embankment and all cut slopes with temporary or permanent vegetation within 7 days of construction.
5. Remove sediment from sediment trap when accumulated sediment reaches half the design water storage of the trap.
6. Inspect sediment trap regularly for damage and accumulated sediment and especially after each storm event. Make repairs as required.
7. Remove the sediment trap and stabilize the location by grading and seeding when the upslope drainage area has been stabilized against erosion.
8. Do not use sediment traps for drainage areas over 5 acres.
9. Provide geotextile filter conforming to Subsection 714.01(c).

NO SCALE

| U.S. DEPARTMENT OF TRANSPORTATION, FHWA OFFICE OF FEDERAL LANDS HIGHWAY | FLH STANDARD 157-4 |
|---|---|
| **SEDIMENT TRAP** | SPECIFICATION FP-24 |
| | APPROVED FOR USE 1/2024 |

M:\PROJECTS\nerf\107(3)\HWY_DES\CADD\Std-Det\S03-Std157-4.dgn [Std 157-4]
2 January 2025 10:24 AM

| PROJECT | SHEET NUMBER |
|---|---|
| WV NP NERI 107(3) | S04 |

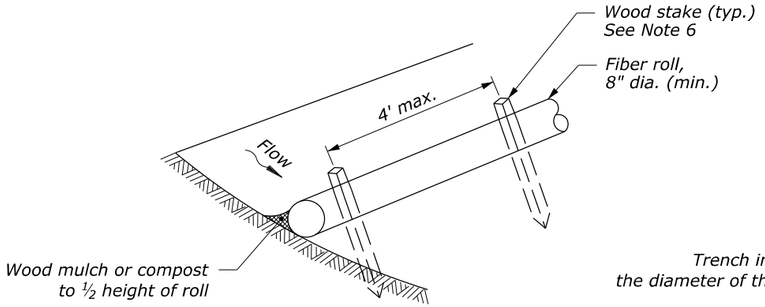


UNTRENCHED INSTALLATION

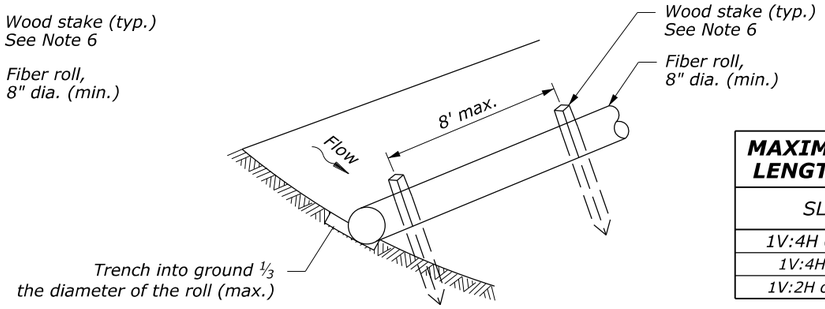


ENTRENCHED INSTALLATION

## FIBER ROLL ISOMETRIC VIEW

| MAXIMUM ALLOWABLE SLOPE LENGTH ABOVE FIBER ROLLS | |
|---|---|
| SLOPE | MAX INTERVAL |
| 1V:4H or Flatter | 20 ft |
| 1V:4H - 1V:2H | 15 ft |
| 1V:2H or Steeper | 10 ft |

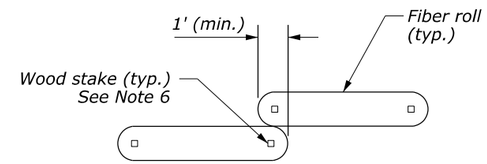


## FIBER ROLL OVERLAP

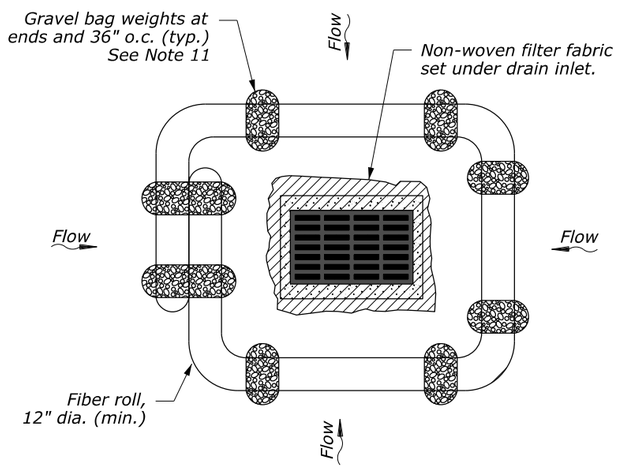


## INLET PROTECTION

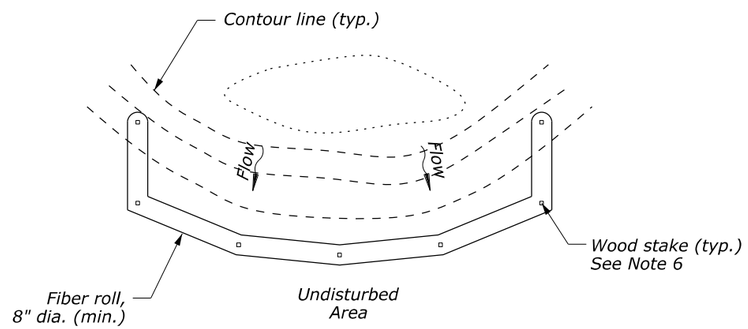


## PLAN VIEW

## NOTES:

1. Provide fiber rolls meeting the requirements of Subsection 713.12.
2. Use fiber rolls with a minimum 8-inch diameter. For drain inlet protection, use fiber rolls with a minimum 12-inch diameter.
3. Prior to installation, clear all obstructions including rocks, clods, and debris greater than 1-inch that may interfere with proper function of the fiber roll.
4. For untrenched installation, blow or hand place mulch or compost on uphill side of the slope along the fiber roll.
5. Place fiber rolls on level grade and parallel to contours. Extend both ends of the fiber roll at least 8 feet upslope at 45 degrees to the main alignment.
6. Use wood stakes with a minimum nominal cross section of 2- by 2-inch and of sufficient length to attain a minimum of 12 inches into the ground and 3 inches protruding above the roll. Furnish wood stakes meeting the requirements of Subsection 713.08(a).
7. When more than one fiber roll is needed, overlap ends 12 inches minimum and stake.
8. Remove sediment deposits when accumulation is one-half the height of the exposed fiber roll.
9. Replace biodegradable fiber rolls 6 months after installation and photodegradable fiber rolls 12 months after installation.
10. When fiber rolls are required on paved surfaces, use gravel bags to support them as shown on the inlet protection view.
11. Provide gravel bag weights meeting the requirements of Subsection 713.13.

| FIBER ROLL CHECK DAM SPACING TABLE | | |
|---|---|---|
| DITCH GRADE * | CHECK DAM SPACING (S)** | |
| | 8" HIGH | 12" HIGH |
| 2% | 33' | 50' |
| 3% | 22' | 33' |
| 4% | 16' | 25' |
| 5% | 13' | 20' |

* Do not install check dams on grades below 2%
** Adjust spacing as approved based on site conditions

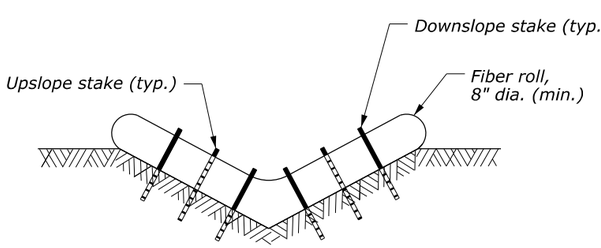


V-DITCH

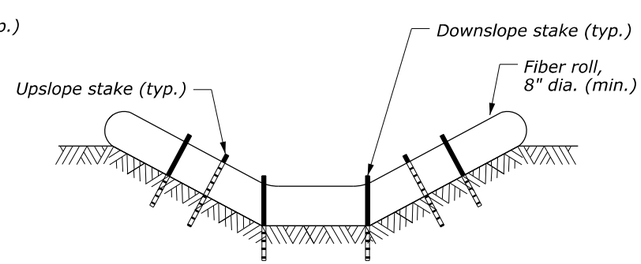


TRAPEZOIDAL DITCH

## FIBER ROLL CHECK DAM CROSS SECTIONS

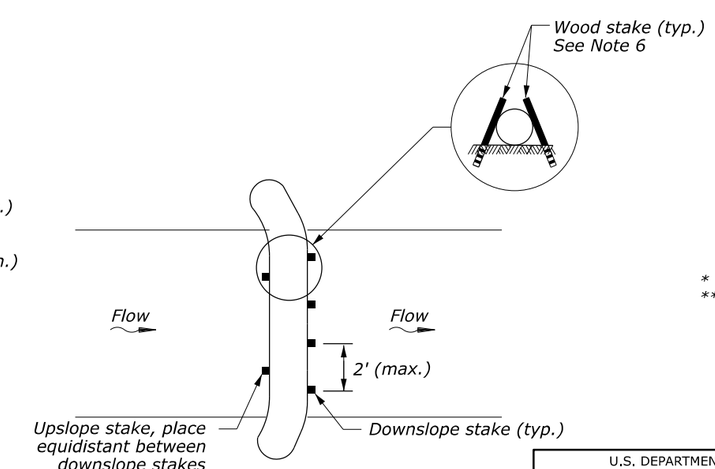


## FIBER ROLL CHECK DAM PLAN VIEW

NO SCALE

U.S. DEPARTMENT OF TRANSPORTATION, FHWA
OFFICE OF FEDERAL LANDS HIGHWAY

**FIBER ROLL**

EFLHD DETAIL
E157-04

SPECIFICATION
FP-24, FP-14

APPROVED FOR USE
05/2024

M:\PROJECTS\nerf\107(3)\HWY_DES\CADD\Std-Det\S04-E157-04.dgn [Sheet]
16 May 2025 2:52 PM

| PROJECT | SHEET NUMBER |
|---|---|
| WV NP NERI 107(3) | S05 |

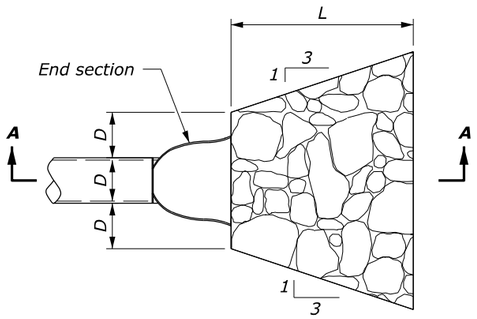


PLAN

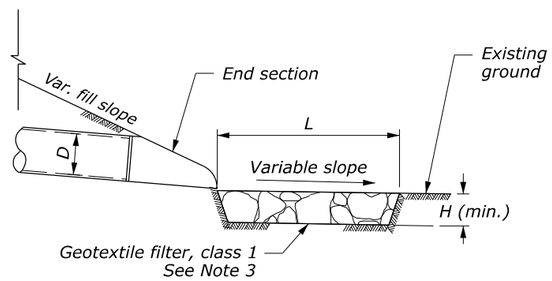


SECTION A-A

CULVERT WITH END SECTION

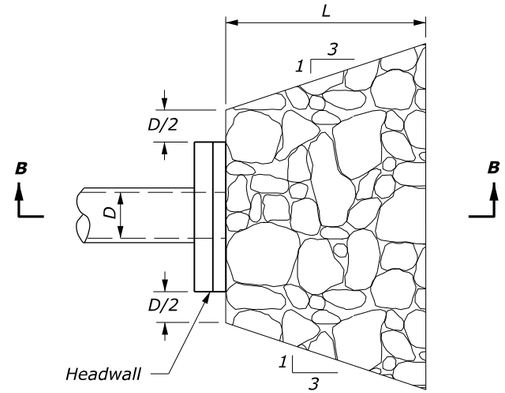


PLAN

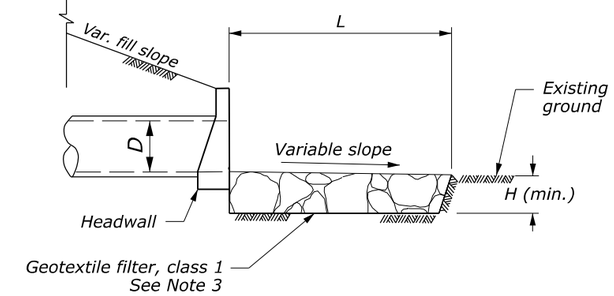


SECTION B-B

CULVERT WITH HEADWALL

## PROTECTIVE APRON AT CULVERT OUTLET WITHOUT DITCH

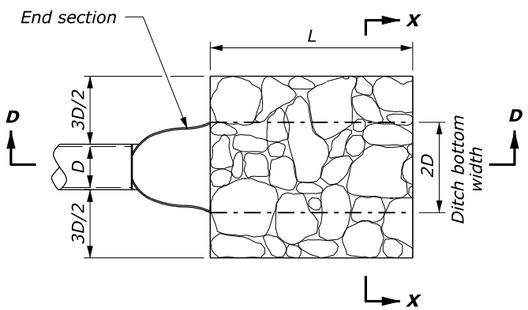


PLAN

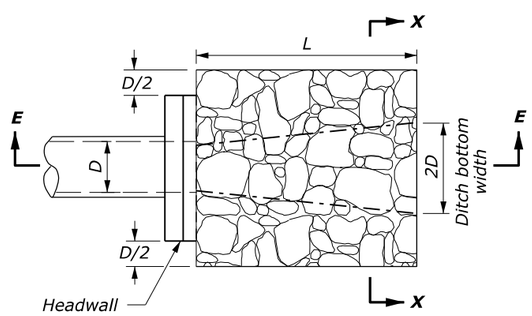


PLAN

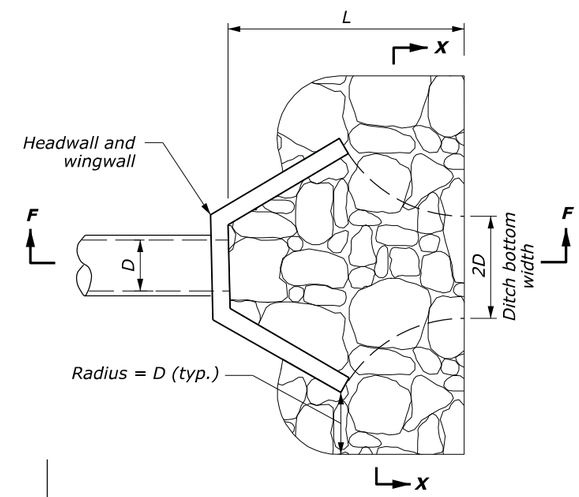


PLAN

## NOTES:

1. Use for aprons serving culverts with slopes of less than 10%.
2. For arch or elliptical pipes, use equivalent diameter for (D) dimension.
3. Provide geotextile filter conforming to Subsection 714.01(c).
4. See Sheet 2 of 2 for dimensions and estimated quantities.

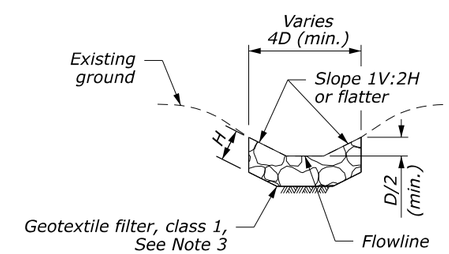


SECTION X-X

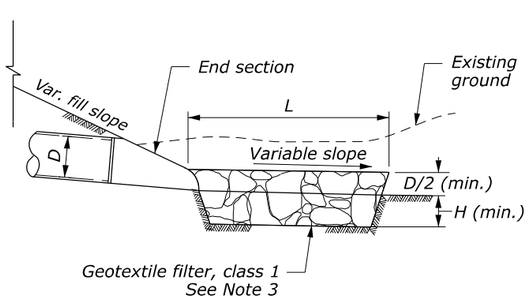


SECTION D-D

CULVERT WITH END SECTION

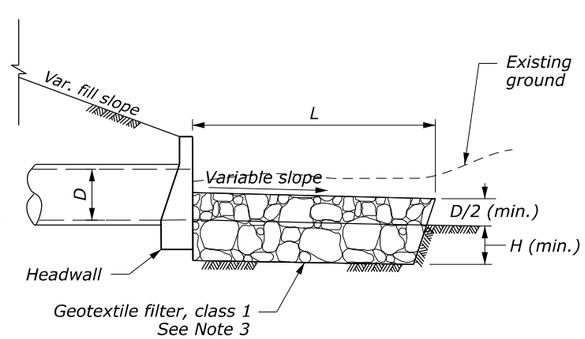


SECTION E-E

CULVERT WITH HEADWALL

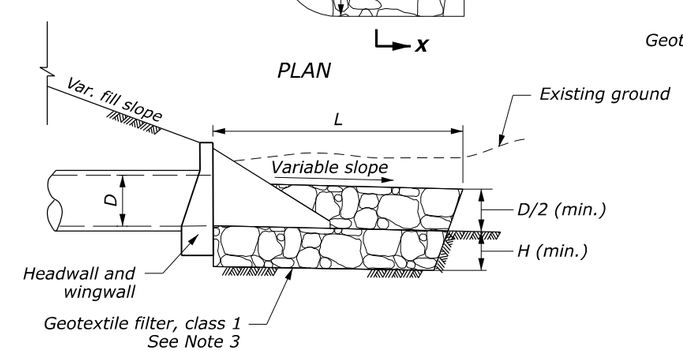


SECTION F-F

CULVERT WITH HEADWALL AND WINGWALL

## PROTECTIVE APRON AT CULVERT OUTLET WITH DITCH

NO SCALE

U.S. DEPARTMENT OF TRANSPORTATION, FHWA
OFFICE OF FEDERAL LANDS HIGHWAY

**PLACED RIPRAP AT CULVERT OUTLETS**
Sheet 1 of 2

EFLHD DETAIL
E251-01

SPECIFICATION
FP-24

APPROVED FOR USE
05/2024

M:\PROJECTS\nerf\107(3)\HWY_DES\CADD\Std-Det\S05-S06-E251-01.dgn [Sheet 1 of 2]
9 February 2026 2:39 PM

| PROJECT | SHEET NUMBER |
|---|---|
| WV NP NERI 107(3) | S06 |

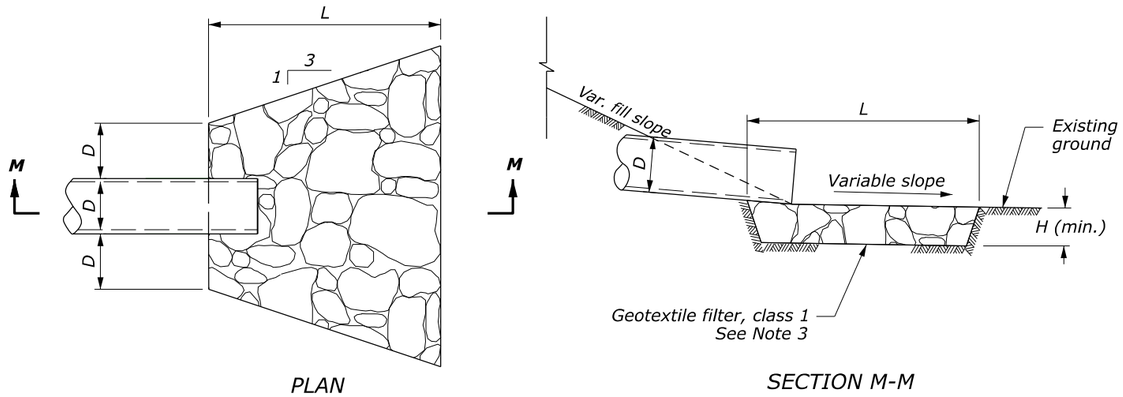


CULVERT OUTLET WITHOUT DITCH

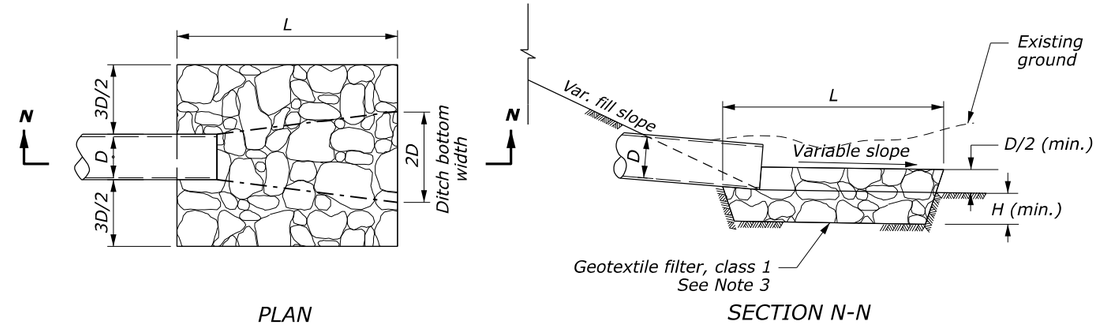


CULVERT OUTLET WITH DITCH

## PROTECTIVE APRON AT CULVERT OUTLET WITH NO END TREATMENT

**PROTECTIVE APRON DIMENSIONS AND ESTIMATED QUANTITIES**

| | | | | | OUTLET WITHOUT DITCH | | OUTLET WITH DITCH | |
|---|---|---|---|---|---|---|---|---|
| | CULVERT SIZE (D) INCH | RIPRAP CLASS | LENGTH OF APRON (L) FT | DEPTH OF APRON (H) FT | ESTIMATED RIPRAP QUANTITY CUYD | ESTIMATED GEOTEXTILE QUANTITY SQYD | ESTIMATED RIPRAP QUANTITY CUYD | ESTIMATED GEOTEXTILE QUANTITY SQYD |
| WITH END SECTION | 12 | 2 | 4 | 1.5 | 1 | 5 | 0.9 | 4 |
| | 18 | 2 | 6 | 1.5 | 2.2 | 9 | 2 | 8 |
| | 24 | 2 | 8 | 1.5 | 3.9 | 13 | 3.6 | 12 |
| | 30 | 3 | 12.5 | 2 | 10.8 | 27 | 9.3 | 24 |
| | 36 | 3 | 15 | 2 | 15.6 | 37 | 13.3 | 32 |
| | 42 | 4 | 21 | 2.5 | 34 | 63 | 27.2 | 52 |
| | 48 | 4 | 24 | 2.5 | 44.4 | 78 | 35.6 | 65 |
| WITH HEADWALL | 12 | 2 | 4 | 1.5 | 1.6 | 6 | 1.1 | 5 |
| | 18 | 2 | 6 | 1.5 | 3 | 10 | 2 | 8 |
| | 24 | 2 | 8 | 1.5 | 5.3 | 16 | 3.6 | 12 |
| | 30 | 3 | 12.5 | 2 | 15 | 32 | 9.3 | 24 |
| | 36 | 3 | 15 | 2 | 21.7 | 43 | 13.3 | 32 |
| | 42 | 4 | 21 | 2.5 | 47.6 | 73 | 27.2 | 52 |
| | 48 | 4 | 24 | 2.5 | 62.2 | 91 | 35.6 | 65 |
| WITH HEADWALL AND WINGWALL | 12 | 2 | 4 | 1.5 | 1.6 | 6 | 1.1 | 6.3 |
| | 18 | 2 | 6 | 1.5 | 3 | 10 | 2.5 | 11.1 |
| | 24 | 2 | 8 | 1.5 | 5.3 | 16 | 4.5 | 17 |
| | 30 | 3 | 12.5 | 2 | 15 | 32 | 11.6 | 32 |
| | 36 | 3 | 15 | 2 | 21.7 | 43 | 16.7 | 42.6 |
| | 42 | 4 | 21 | 2.5 | 47.6 | 73 | 34.1 | 68.4 |
| | 48 | 4 | 24 | 2.5 | 62.2 | 91 | 44.5 | 84.9 |
| WITH NO END TREATMENT | 12 | 2 | 6 | 1.5 | 1.7 | 7 | 1.3 | 6 |
| | 18 | 2 | 8 | 1.5 | 3.2 | 12 | 2.7 | 10 |
| | 24 | 2 | 10 | 1.5 | 5.2 | 17 | 4.4 | 15 |
| | 30 | 3 | 14.5 | 2 | 13.2 | 32 | 10.7 | 27 |
| | 36 | 3 | 17 | 2 | 18.5 | 42 | 15.1 | 36 |
| | 42 | 4 | 23 | 2.5 | 38.7 | 70 | 29.8 | 56 |
| | 48 | 4 | 26 | 2.5 | 49.8 | 86 | 38.5 | 70 |

### NOTES:

1. Use for aprons serving culverts with slopes of less than 10%.
2. For arch or elliptical pipes, use equivalent diameter for (D) dimension.
3. Provide geotextile filter conforming to Subsection 714.01(c).

NO SCALE

U.S. DEPARTMENT OF TRANSPORTATION, FHWA
OFFICE OF FEDERAL LANDS HIGHWAY

**PLACED RIPRAP AT CULVERT OUTLETS**
Sheet 2 of 2

EFLHD DETAIL
E251-01

SPECIFICATION
FP-24

APPROVED FOR USE
05/2024

20 February 2026 4:05 PM M:\PROJECTS\nerf\107(3)\HWY_DES\CADD\Std-Det\S05-S06-E251-01.dgn [Sheet 2 of 2]

| PROJECT | SHEET NUMBER |
|---|---|
| WV NP NERI 107(3) | S07 |

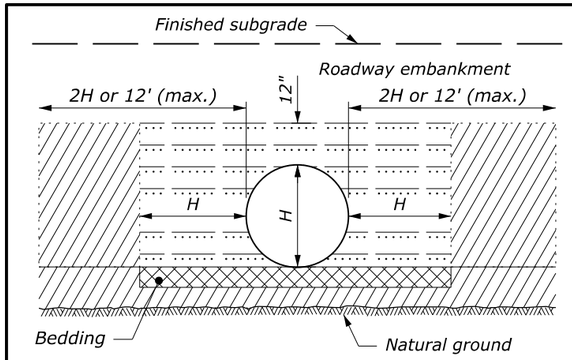


**ABOVE NATURAL GROUND**

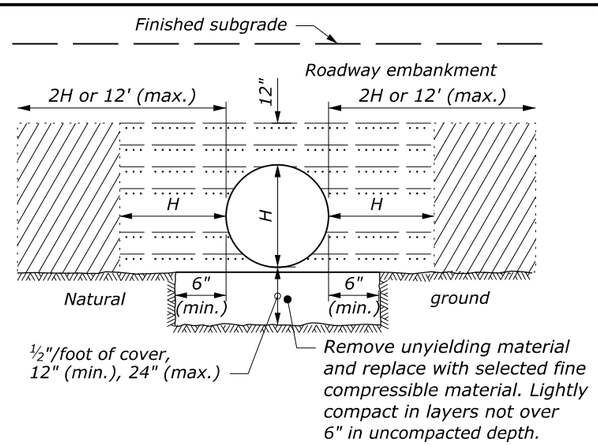


**ON UNYIELDING MATERIAL**

| BEDDING DEPTH | |
|---|---|
| PIPE SIZE (H) | DEPTH |
| 12" to 54" | 4" |
| > 54" | 6" |

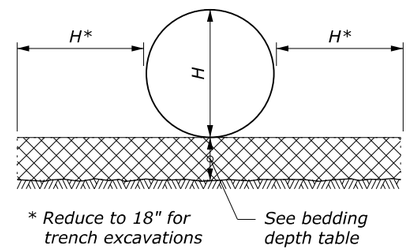


**PIPE BEDDING**

## NOTE:

1. When directed, camber pipe culverts upward from a chord through the inlet and outlet inverts an ordinate amount equal to 1% of the pipe length. Develop camber on a parabolic curve. If the midpoint elevation on the parabolic curve as designed exceeds the elevation of the inlet invert, reduce the amount of camber or increase the pipe culvert gradient.

2. H equals the diameter of all round pipe culverts or the rise dimension of all pipe arch culverts.

3. See Section 704 for bedding and backfill requirements.

| MINIMUM SPACING | |
|---|---|
| DIAMETER or SPAN | SPACING |
| UP to 48" | 24" |
| 48" and UP | Half diameter or span or 36", whichever is less |

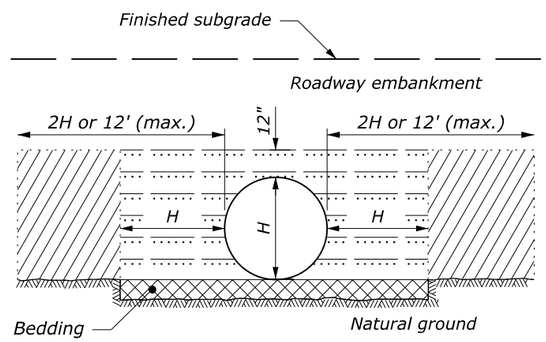


**ON NATURAL GROUND**

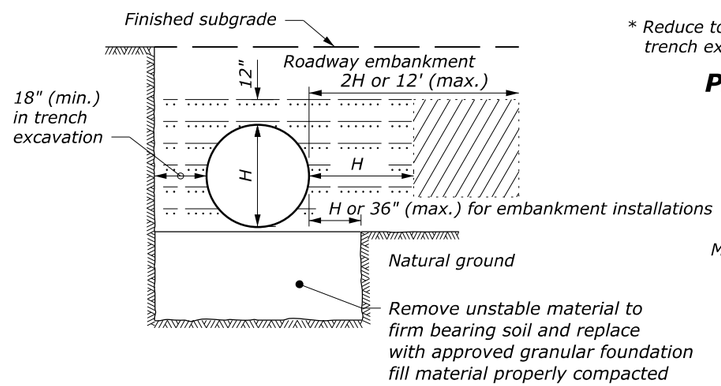


**ON UNSTABLE MATERIAL**

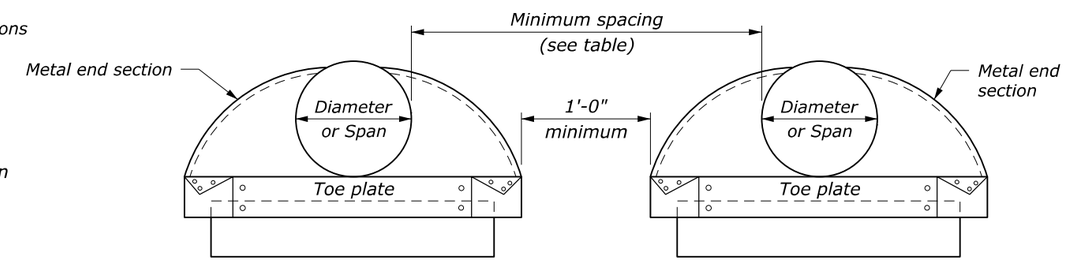


ELEVATION

**MULTIPLE PIPE INSTALLATION**

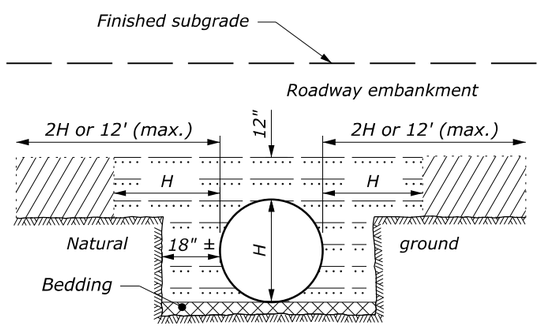


**ABOVE AND BELOW NATURAL GROUND**

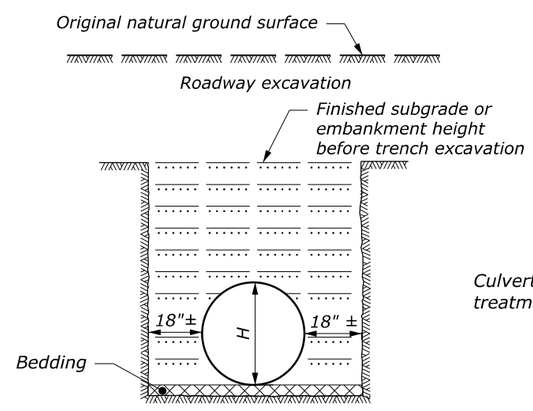


**BELOW NATURAL GROUND OR TRENCH EXCAVATION IN EMBANKMENT**

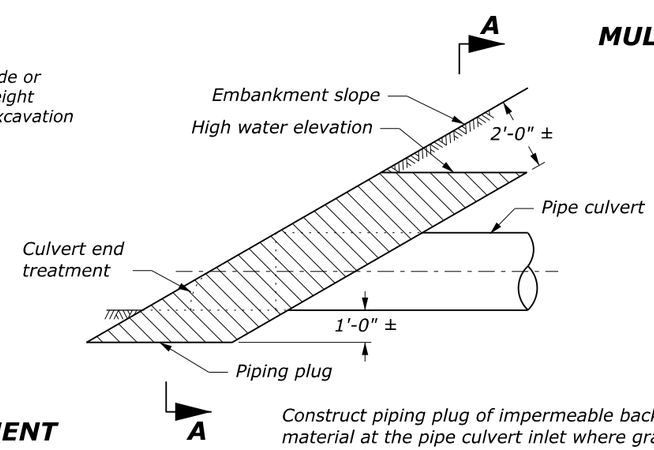


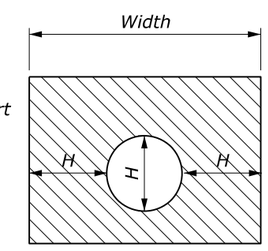


SECTION A-A

Construct piping plug of impermeable backfill material at the pipe culvert inlet where granular material is used for backfill. Width may be adjusted to tie into impervious material.

**PIPING PLUG**

## LEGEND:

- Bedding material (uncompacted)
- Embankment material placed in layers not exceeding 6" compacted depth.
- Compacted backfill material placed in layers not exceeding 6" compacted depth; or flowable backfill according to Section 614.
- Impermeable backfill material.

NO SCALE

U.S. DEPARTMENT OF TRANSPORTATION, FHWA
OFFICE OF FEDERAL LANDS HIGHWAY

**METAL AND PLASTIC PIPE CULVERT BEDDING**

FLH STANDARD 602-3
SPECIFICATION FP-24
APPROVED FOR USE 1/2024

M:\PROJECTS\nerl\107(3)\HWY_DES\CADD\Std-Det\S07-Std602-3.dgn [Std 602-3]
2 January 2025 10:27 AM

## POLYETHYLENE (PE) PLASTIC ROUND PIPE CULVERT & STORM DRAIN

FILL HEIGHT TABLE AND MINIMUM CELL CLASSIFICATION NUMBER PER ASTM D 3350

**SMOOTH WALL (SOLID WALL)**

| PIPE SIZE DIAMETER INCHES | MINIMUM COVER INCHES | CELL CLASSIFICATION NUMBER 335434C — MINIMUM WALL THICKNESS (INCHES) 0.607 | 0.857 | 0.923 | 1.154 | 1.385 | 1.292 | 1.477 |
|---|---|---|---|---|---|---|---|---|
| | | MAXIMUM FILL HEIGHT (FEET) | | | | | | |
| 12 | 12 | 57 | | | | | | |
| 18 | 12 | | 52 | | | | | |
| 24 | 12 | | | 38 | | | | |
| 30 | 12 | | | | 38 | | | |
| 36 | 12 | | | | | 38 | | |
| 42 | 12 | | | | | | 27 | |
| 48 | 12 | | | | | | | 27 |

**CORRUGATED**

| PIPE SIZE DIAMETER INCHES | MINIMUM COVER INCHES | AASHTO M294 MAXIMUM FILL HEIGHT (FEET) |
|---|---|---|
| 12 | 12 | 15 |
| 15 | 12 | 13 |
| 18 | 12 | 13 |
| 24 | 12 | 12 |
| 30 | 12 | 12 |
| 36 | 12 | 10 |

**RIBBED**

| PIPE SIZE DIAMETER INCHES | MINIMUM COVER INCHES | CELL CLASS. NO. 334433C | CELL CLASS. NO. 335434C |
|---|---|---|---|
| | | MAXIMUM FILL HEIGHT (FEET) | |
| 18 | 12 | 18 | 24 |
| 24 | 12 | 22 | 28 |
| 30 | 12 | 22 | 28 |
| 36 | 12 | 25 | 31 |
| 42 | 12 | 21 | 27 |
| 48 | 12 | 21 | 26 |

### NOTE:

1. *When directed, camber pipe culverts upward from a chord through the inlet and outlet inverts an ordinate amount equal to 1% of the pipe length. Develop camber on a parabolic curve. If the midpoint elevation on the parabolic curve as designed exceeds the elevation of the inlet invert, reduce the amount of camber or increase the pipe culvert gradient.*

2. *For flexible pavement and aggregate surface roadways, measure minimum cover from the top of the pipe culvert to the bottom of the roadway subgrade. For rigid pavements, measure minimum cover from the top of the pipe culvert to the top of the pavement. For all roadway surface types, measure maximum fill height from the top of the pipe culvert to the top of the pavement.*

## POLYVINYL CHLORIDE (PVC) PLASTIC ROUND PIPE CULVERT

FILL HEIGHT TABLE AND MINIMUM CELL CLASSIFICATION NUMBER PER ASTM D 1784

**SMOOTH WALL (SOLID WALL)**

| PIPE SIZE DIAMETER INCHES | MINIMUM COVER INCHES | CELL CLASS. NO. 12454 — MINIMUM WALL THICKNESS (INCHES) 0.358 | 0.438 | CELL CLASS. NO. 12364 — 0.358 | 0.438 |
|---|---|---|---|---|---|
| | | MAXIMUM FILL HEIGHT (FEET) | | | |
| 12 | 12 | 65 | | 69 | |
| 15 | 12 | | 62 | | 66 |

**RIBBED**

| PIPE SIZE DIAMETER INCHES | MINIMUM COVER INCHES | CELL CLASS. NO. 12454C | CELL CLASS. NO. 12364C |
|---|---|---|---|
| | | MAXIMUM FILL HEIGHT (FEET) | |
| 12 | 12 | 37 | 26 |
| 15 | 12 | 32 | 22 |
| 18 | 12 | 33 | 23 |
| 24 | 12 | 29 | 21 |
| 30 | 12 | 28 | 20 |
| 36 | 12 | 27 | 19 |
| 42 | 12 | 26 | 18 |
| 48 | 12 | 24 | 17 |

## POLYPROPYLENE (PP) PLASTIC ROUND PIPE CULVERT AND STORM DRAIN

FILL HEIGHT TABLE AND MINIMUM CELL CLASSIFICATION NUMBER PER ASTM D 3350

**CORRUGATED**

| PIPE SIZE DIAMETER INCHES | MINIMUM COVER INCHES | AASHTO M330 MAXIMUM FILL HEIGHT (FEET) |
|---|---|---|
| 12 | 12 | 17 |
| 15 | 12 | 17 |
| 18 | 12 | 17 |
| 24 | 12 | 16 |
| 30 | 12 | 14 |
| 36 | 12 | 12 |

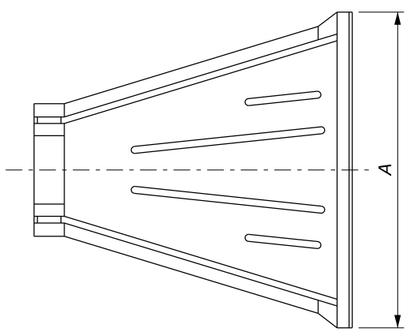


TOP

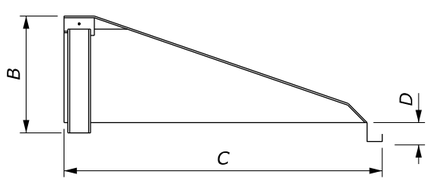


SIDE

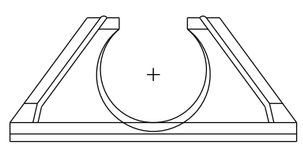

FRONT

### END SECTION DIMENSIONS

| PIPE SIZE DIAMETER INCHES | DIMENSIONS INCHES A | B | C | D |
|---|---|---|---|---|
| 12 | 42 | 14.5 | 33 | 6 |
| 15 | 46 | 24.5 | 45.5 | 6 |
| 18 | 54 | 29 | 55 | 6 |
| 24 | 64 | 37 | 65 | 6 |
| 30 | 88 | 36 | 63.5 | 6 |
| 36 | 88 | 43 | 66.5 | 6 |

## PLASTIC PIPE END SECTION

NO SCALE

U.S. DEPARTMENT OF TRANSPORTATION, FHWA
OFFICE OF FEDERAL LANDS HIGHWAY

**PLASTIC PIPE CULVERT**

FLH STANDARD 602-5

SPECIFICATION FP-24, FP-14

APPROVED FOR USE 5/2025

M:\PROJECTS\nerf\107(3)\HWY_DES\CADD\Std-Det\S08-Std602-5.dgn [Std 602-5]
22 October 2025 1:08 PM

| PROJECT | SHEET NUMBER |
|---|---|
| WV NP NERI 107(3) | S09 |

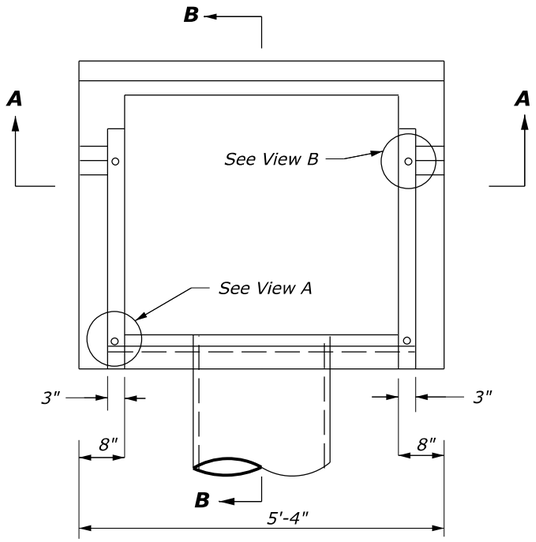


**PLAN**

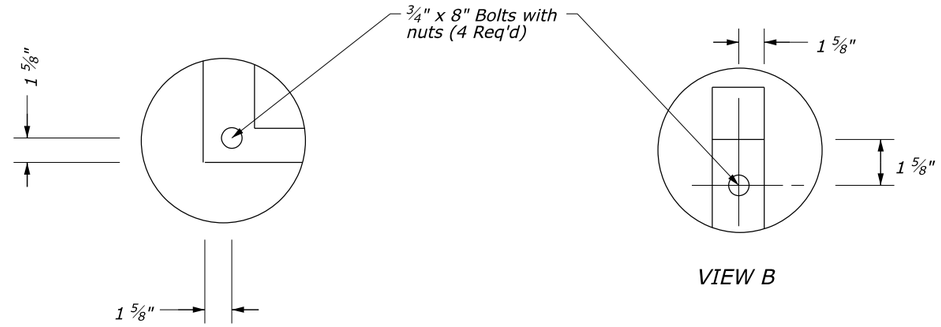


VIEW A

VIEW B

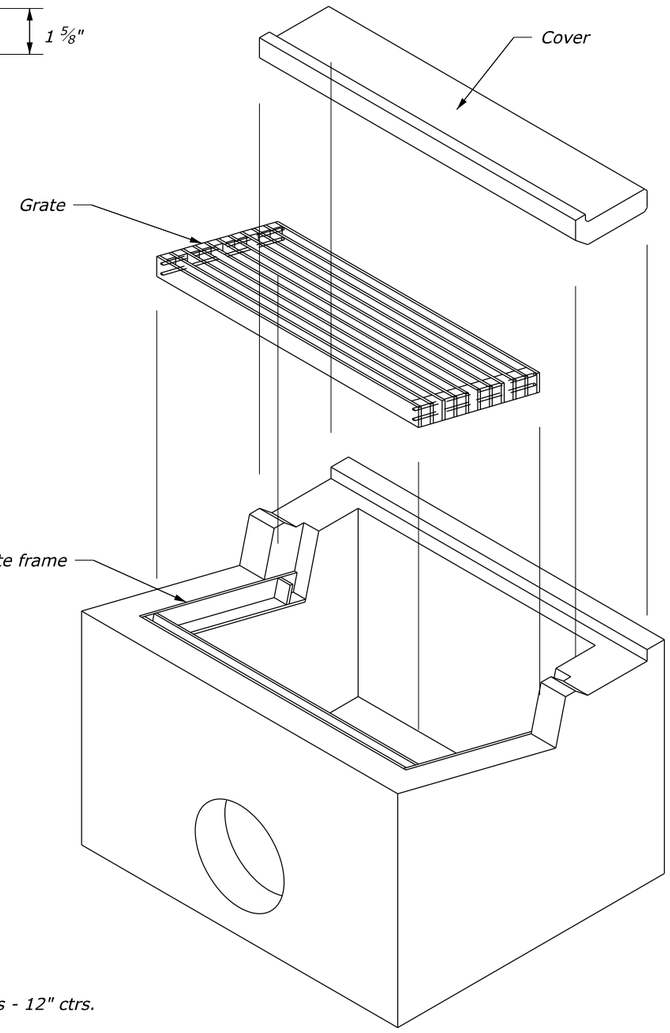


**ISOMETRIC VIEW**

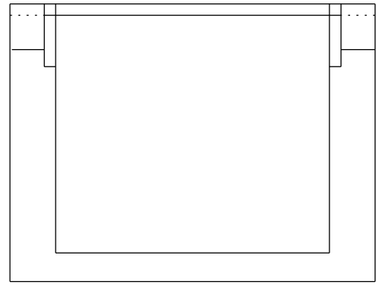

SECTION A-A

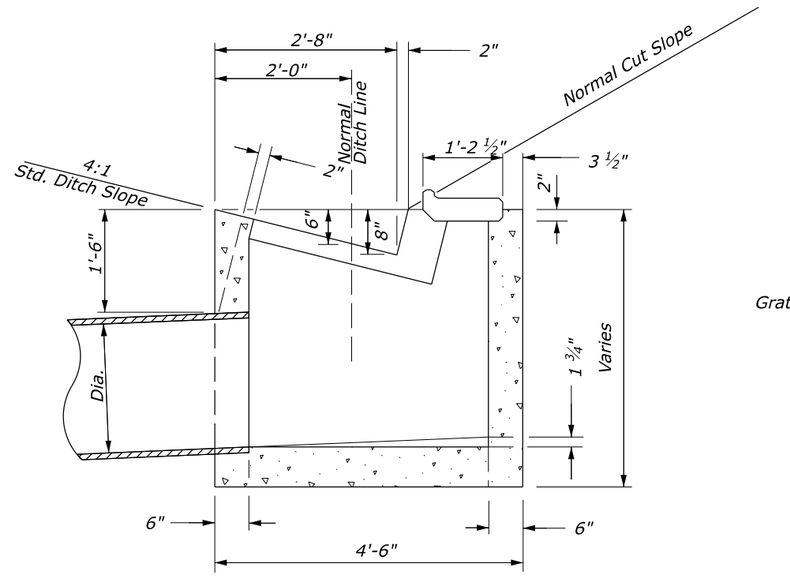


SECTION B-B

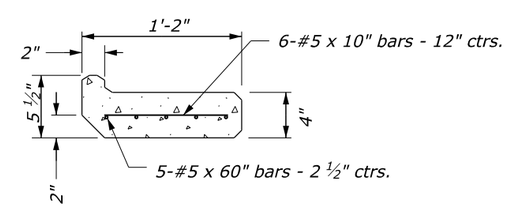


**PRECAST COVER**

Length = 5'-4"

## NOTES:

1. Provide #5 reinforcing bars, placed 1½ inches minimum from face of concrete.
2. In floors, place bars on 6-inch centers each way. In walls, place horizontal bars on 6-inch centers and vertical bars on 12-inch centers.
3. Ensure all square corners on precast cover have 1½-inch by 45° chamfer.
4. Bolt grate frame to inlet; alternate fastening methods will be allowed as approved.
5. See Sheet 2 of 2 for metal frame and grate details.
6. Inlet shown in cut location. In fill locations, use similar inlet except pipe outlet is on opposite side.

NO SCALE

U.S. DEPARTMENT OF TRANSPORTATION, FHWA
OFFICE OF FEDERAL LANDS HIGHWAY

**INLET, TYPE 4D**

Sheet 1 of 2

EFLHD DETAIL
E604-02

SPECIFICATION
FP-24, FP-14

APPROVED FOR USE
05/2024

C:\PROJECTS\nerf\107(3)\HWY_DES\CADD\Std-Det\S09-S10-E604-02.dgn [Sheet-1]
2 January 2025 9:54 AM

| PROJECT | SHEET NUMBER |
|---|---|
| WV NP NERI 107(3) | S10 |

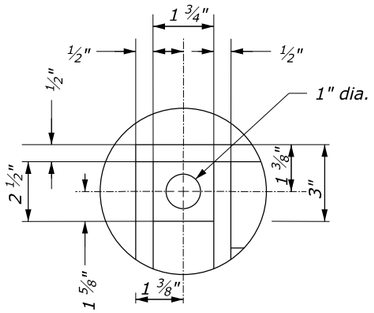


VIEW B

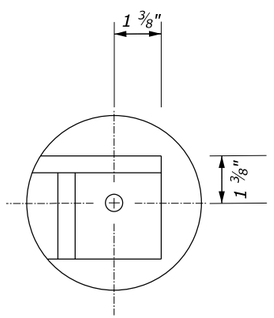


VIEW D

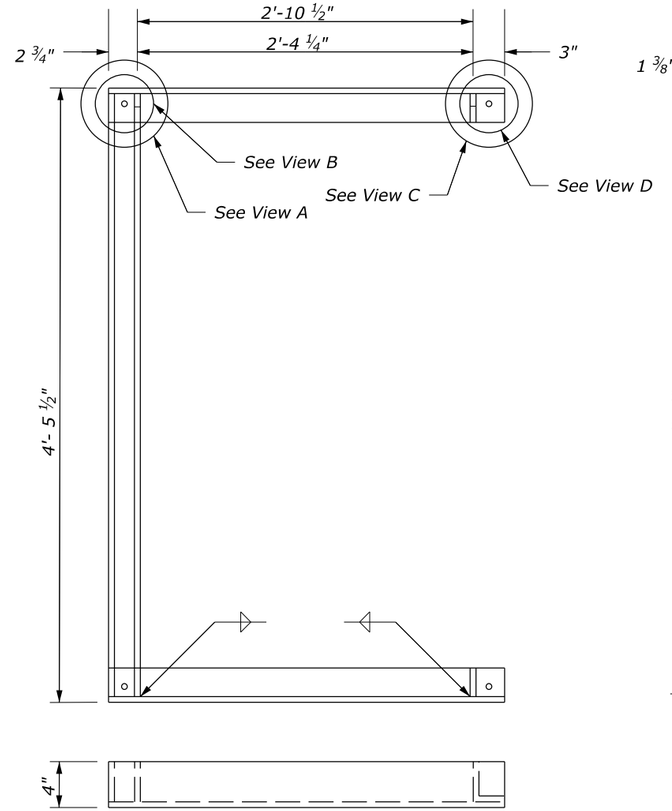


**GRATE FRAME**

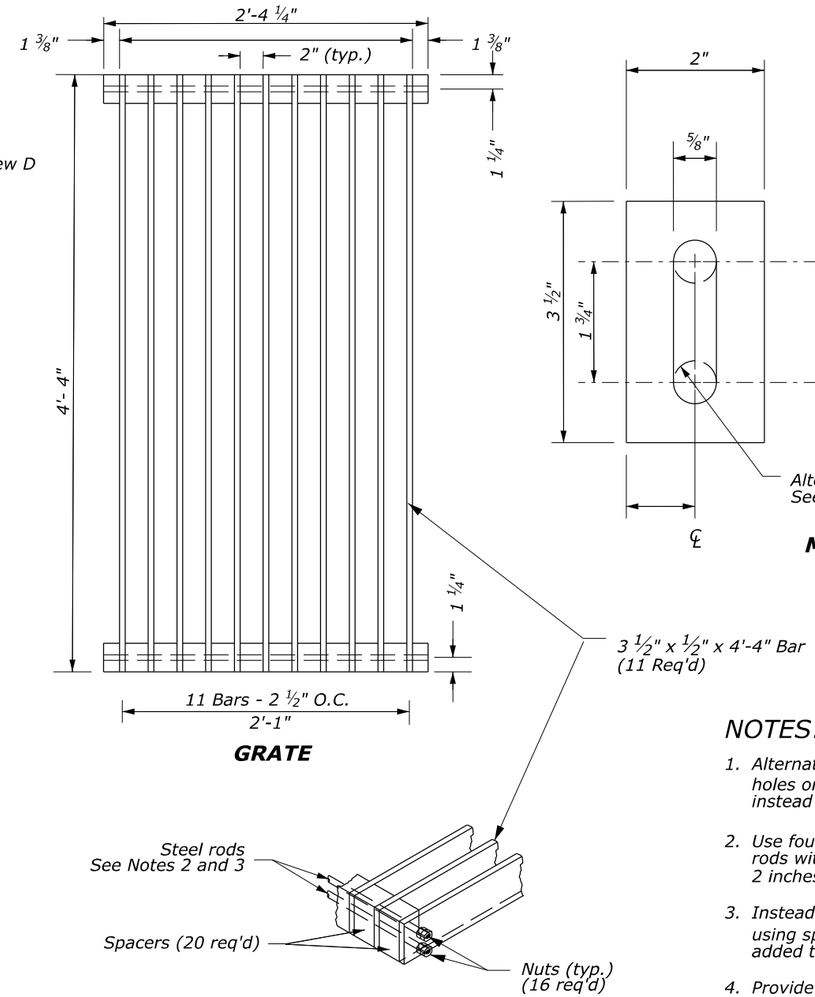


**GRATE**

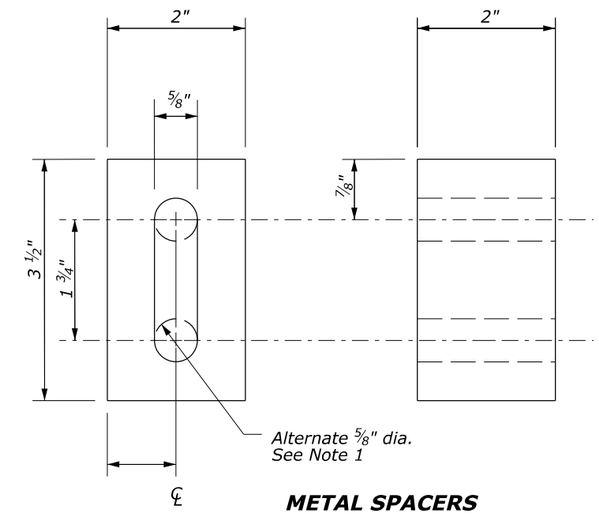


**METAL SPACERS**

## NOTES:

1. Alternatively provide spacers with 5/8-inch diameter holes or two pieces of ½-inch galvanized iron pipe instead of slot shown.
2. Use four ½-inch diameter by 28¼-inch length steel rods with two nuts on each end. Thread rods 2 inches ± on each end.
3. Instead of rods and nuts, use bars welded together using spacers with two extra 1¾-inch outside spacers added to each end.
4. Provide metal parts for the frame and grate that are hot dipped galvanized after fabrication. Provide steel frame and grate.

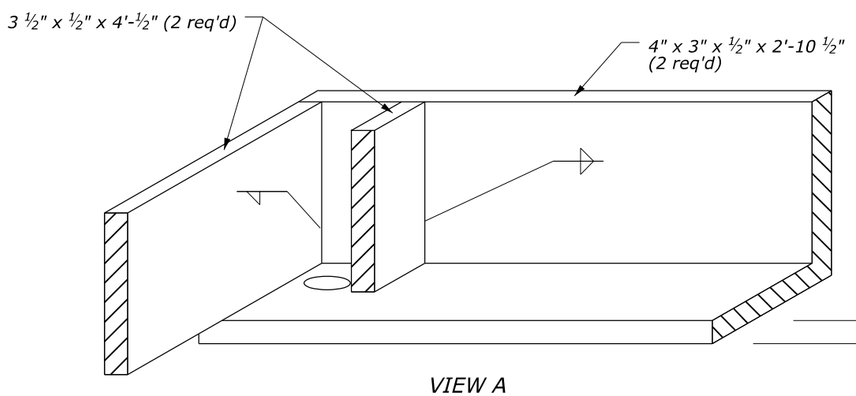


VIEW A
(OBLIQUE)

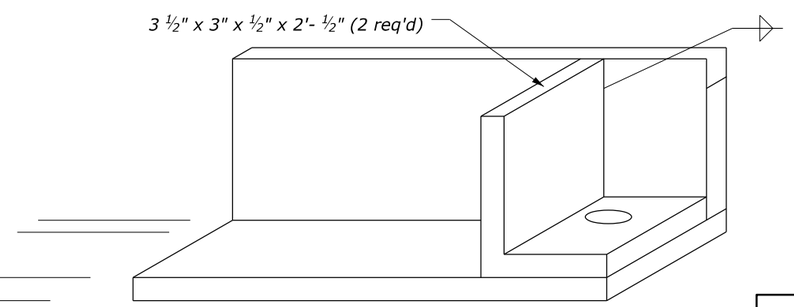


VIEW C
(OBLIQUE)

## LEGEND

Weld both sides

Fillet lap weld

NO SCALE

U.S. DEPARTMENT OF TRANSPORTATION, FHWA
OFFICE OF FEDERAL LANDS HIGHWAY

**INLET, TYPE 4D**

Sheet 2 of 2

EFLHD DETAIL
E604-02

SPECIFICATION
FP-24, FP-14

APPROVED FOR USE
05/2024

M:\PROJECTS\nerl\107(3)\HWY_DES\CADD\Std-Det\S09-S10-E604-02.dgn [Sheet-2]
2 January 2025 10:28 AM

| PROJECT | SHEET NUMBER |
|---|---|
| WV NP NERI 107(3) | S11 |

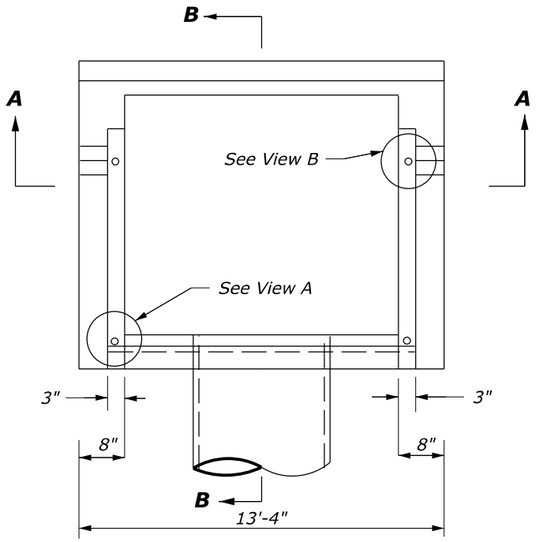


**PLAN**

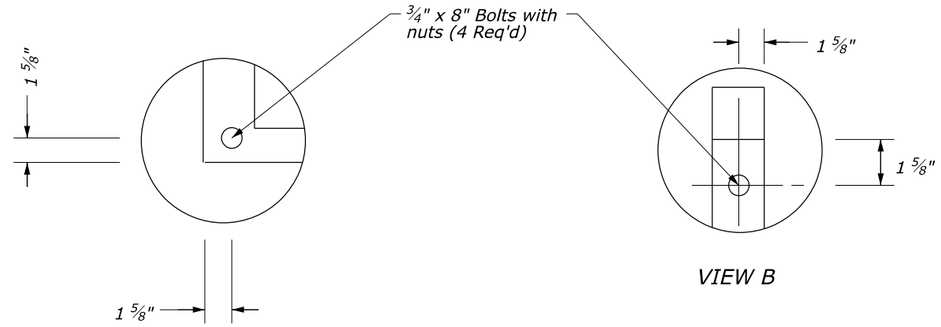


VIEW A

VIEW B

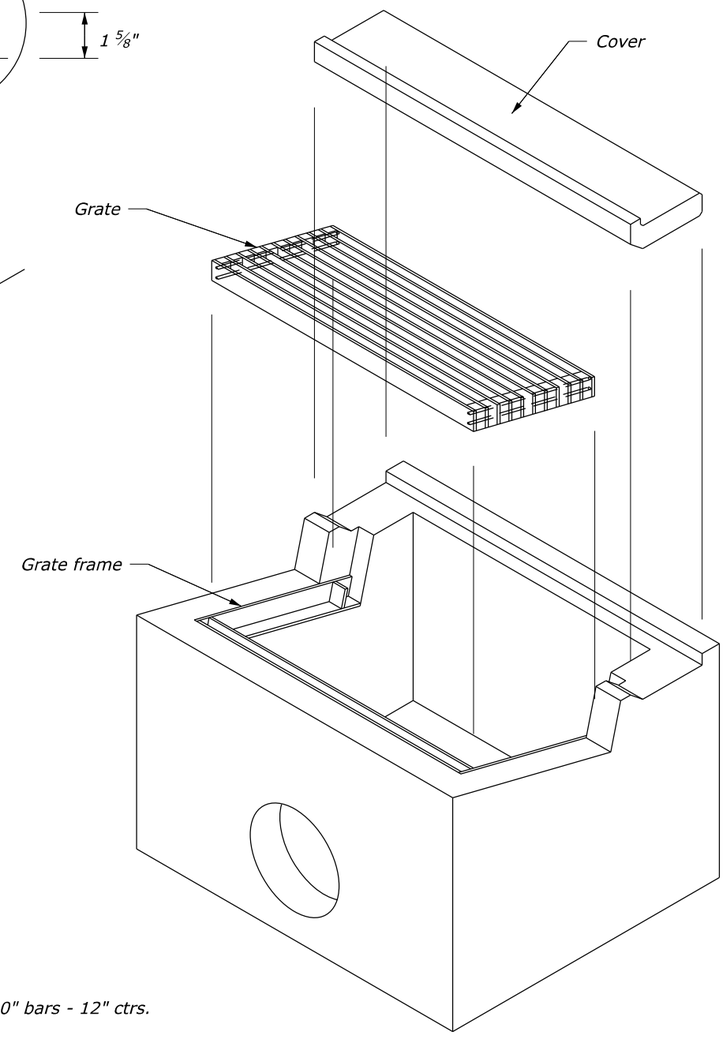


**ISOMETRIC VIEW**

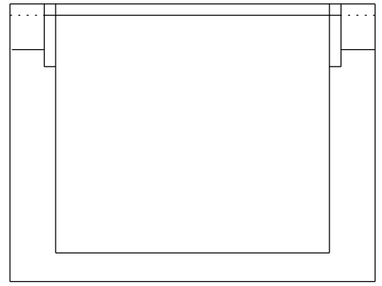

SECTION A-A

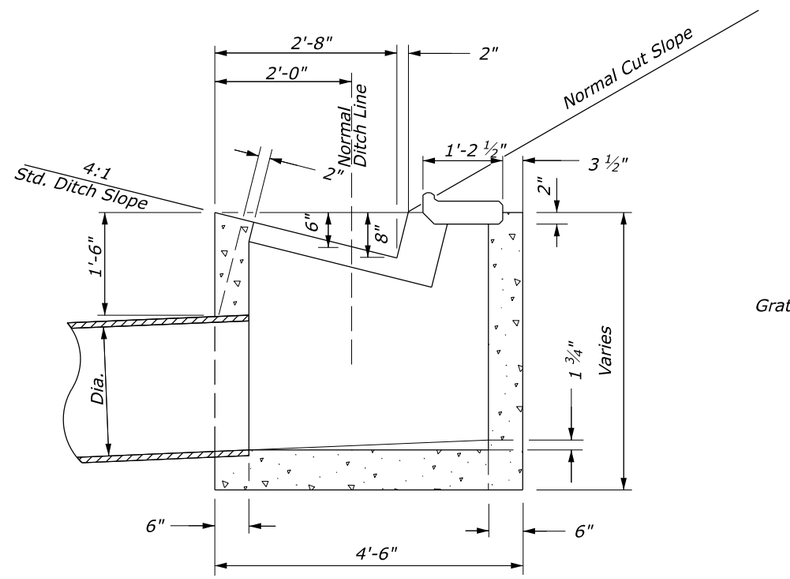


SECTION B-B

## NOTES:

1. Provide #5 reinforcing bars, placed 1½ inches minimum from face of concrete.
2. In floors, place bars on 6-inch centers each way. In walls, place horizontal bars on 6-inch centers and vertical bars on 12-inch centers.
3. Ensure all square corners on precast cover have 1½-inch by 45° chamfer.
4. Bolt grate frame to inlet; alternate fastening methods will be allowed as approved.
5. See Sheet 2 of 2 for metal frame and grate details.
6. Inlet shown in cut location. In fill locations, use similar inlet except pipe outlet is on opposite side.

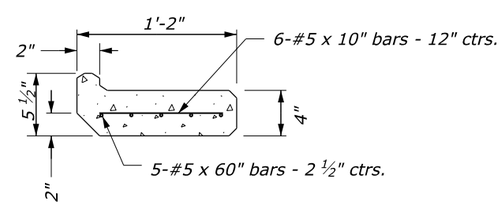


**PRECAST COVER**

Length = 5'-4"

NO SCALE

U.S. DEPARTMENT OF TRANSPORTATION, FHWA
OFFICE OF FEDERAL LANDS HIGHWAY

**INLET, TYPE 4D (MODIFIED)**

Sheet 1 of 2

EFLHD DETAIL
E604-02A

SPECIFICATION
FP-24, FP-14

M:\PROJECTS\nerl\107(3)\HWY_DES\CADD\Std-Det\S11-S12-E604-02.dgn [Sheet-1]
2 January 2025 10:30 AM

| PROJECT | SHEET NUMBER |
|---|---|
| WV NP NERI 107(3) | S12 |

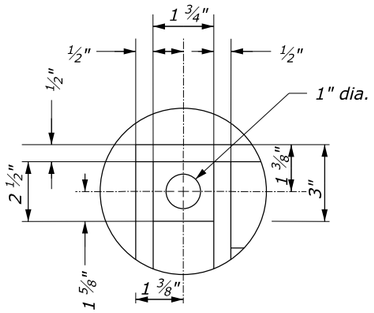


VIEW B

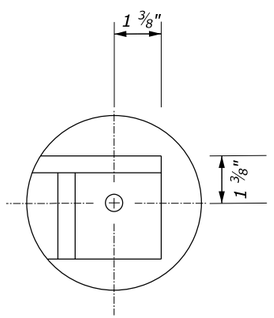


VIEW D

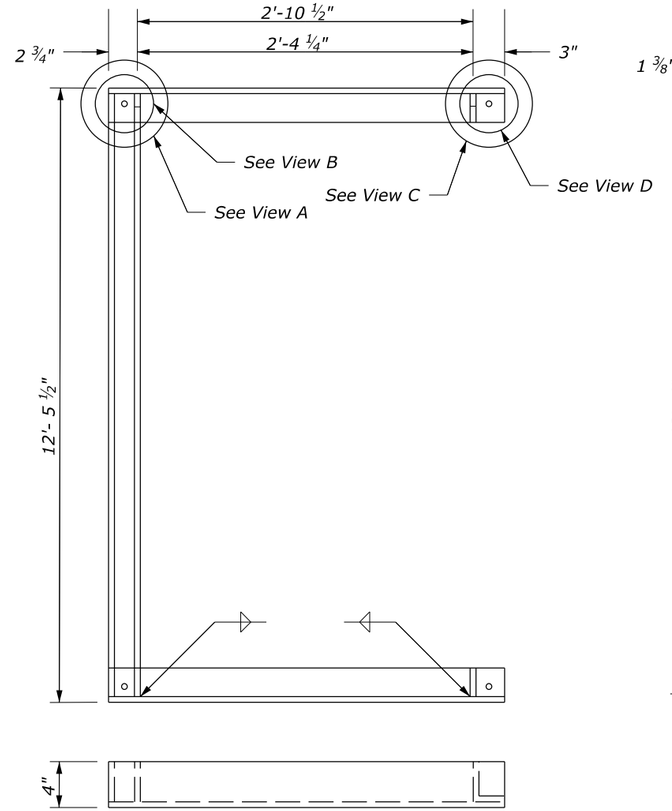


GRATE FRAME

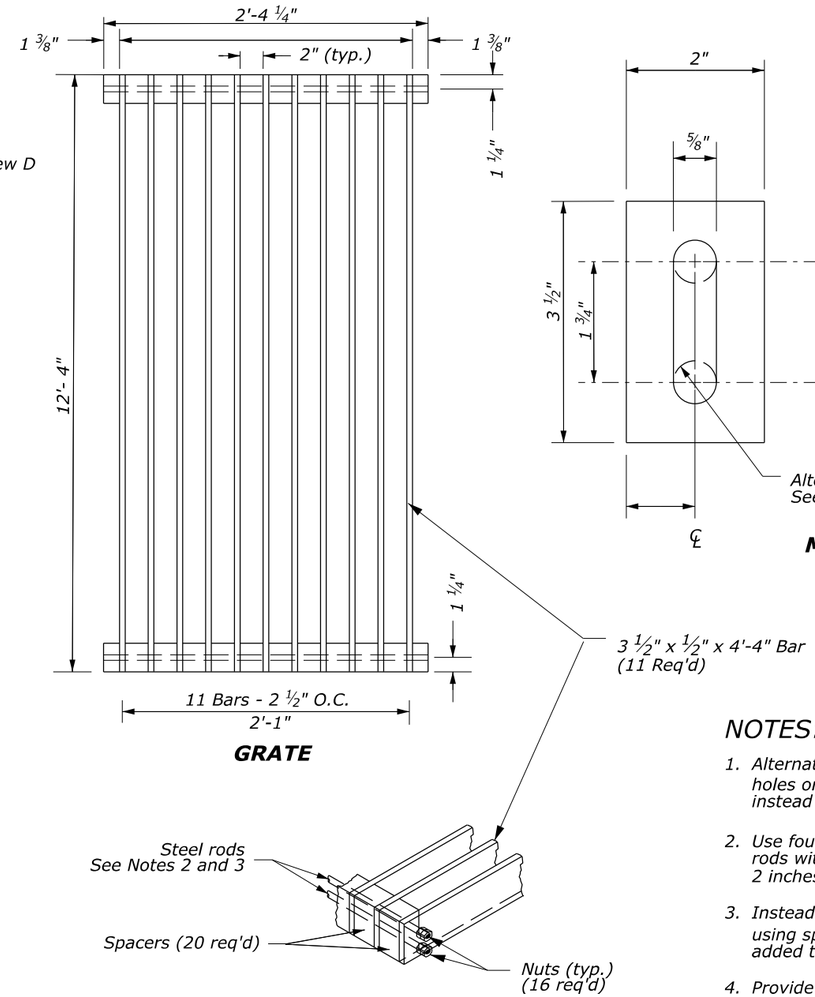


GRATE

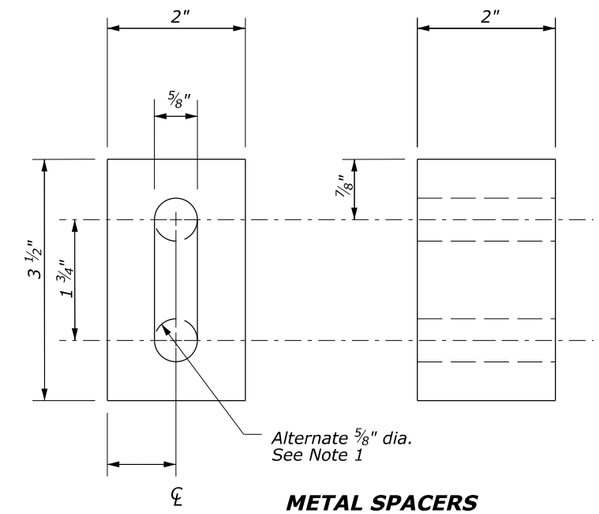


METAL SPACERS

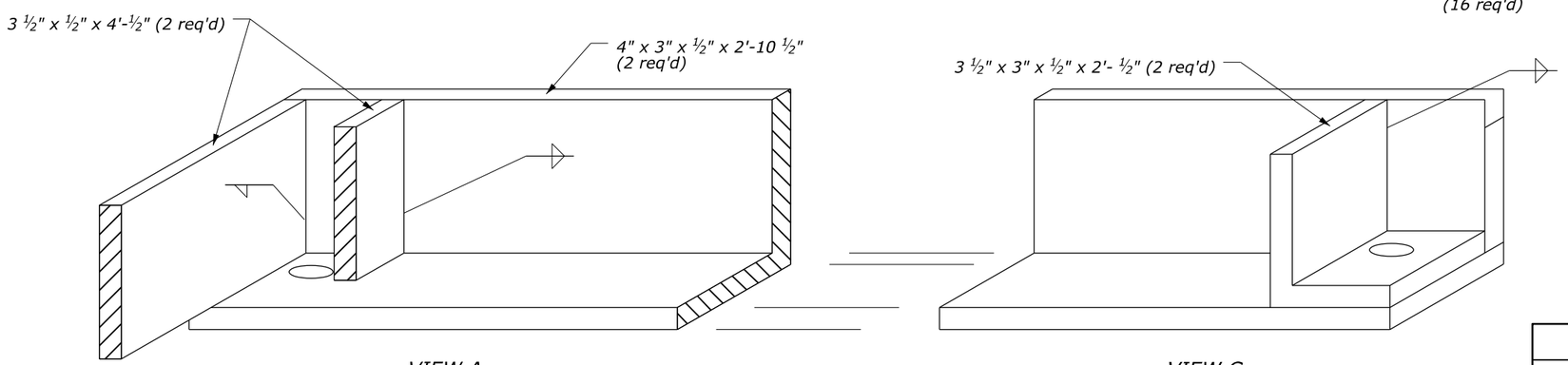


VIEW A
(OBLIQUE)

VIEW C
(OBLIQUE)

NO SCALE

## NOTES:

1. Alternatively provide spacers with ⅝-inch diameter holes or two pieces of ½-inch galvanized iron pipe instead of slot shown.
2. Use four ½-inch diameter by 28¼-inch length steel rods with two nuts on each end. Thread rods 2 inches ± on each end.
3. Instead of rods and nuts, use bars welded together using spacers with two extra 1¾-inch outside spacers added to each end.
4. Provide metal parts for the frame and grate that are hot dipped galvanized after fabrication. Provide steel frame and grate.

## LEGEND

Weld both sides

Fillet lap weld

U.S. DEPARTMENT OF TRANSPORTATION, FHWA
OFFICE OF FEDERAL LANDS HIGHWAY

**INLET, TYPE 4D (MODIFIED)**
Sheet 2 of 2

EFLHD DETAIL
E604-02A

SPECIFICATION
FP-24, FP-14

C:\PROJECTS\neri\107(3)\HWY_DES\CADD\Std-Det\S11-S12-E604-02.dgn [Sheet-2]
2 January 2025 10:29 AM

| PROJECT | SHEET NUMBER |
|---|---|
| WV NP NERI 107(3) | S13 |

## NOTES:

1. Install the first outlet drain at a low point 30 feet from the beginning of the wall or as directed by the CO. Install additional outlet pipes at low points spaced 60 feet apart or as directed by the CO.
2. Place nonperforated outlet pipes and perforated collector pipes at a minimum 2% slope.
3. At the end of each outlet pipe, place a Class 2 riprap pad with dimensions of 2 feet in width x 2 feet in length x 1.5 feet in depth.
4. Align the collector pipe with the weep holes in the anchored soldier pile wall.
5. Provide geotextile filter conforming to Subsection 714.01(c).

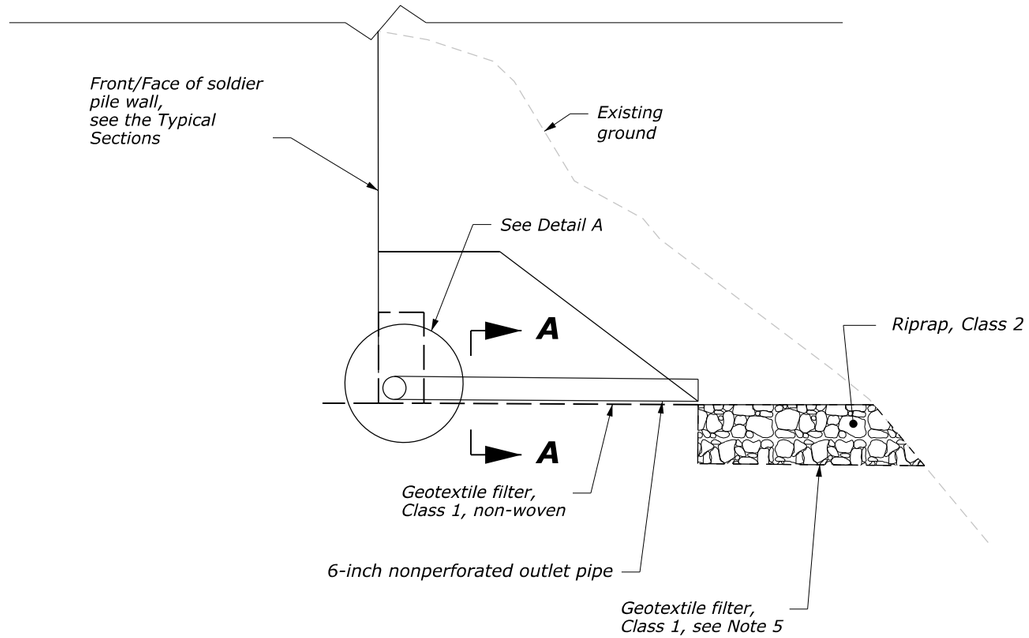


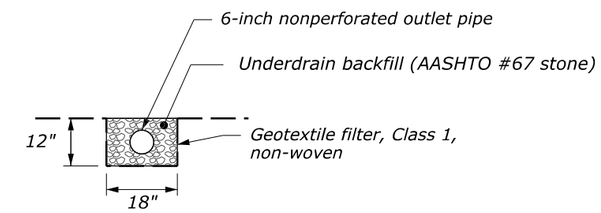


SECTION A-A

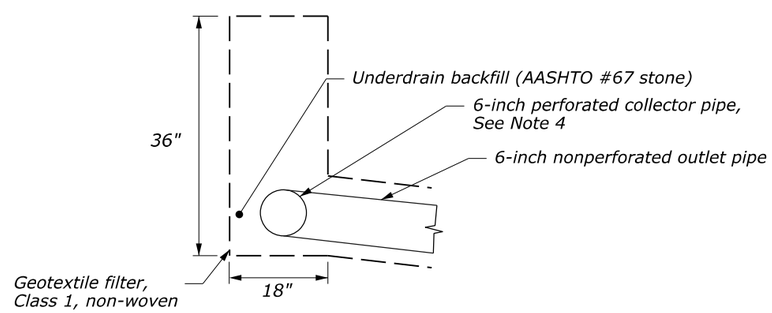


**DETAIL A**

NO SCALE

| U.S. DEPARTMENT OF TRANSPORTATION, FHWA OFFICE OF FEDERAL LANDS HIGHWAY | EFLHD DETAIL E605-A |
|---|---|
| **UNDERDRAIN** | SPECIFICATION FP-24 |

10 February 2026 9:57 AM M:\PROJECTS\neri\107(3)\HWY_DES\CADD\Std-Det\S13_E605-A Underdrain.dgn [605 A Underdrain [Sheet]]

| PROJECT | SHEET NUMBER |
|---|---|
| WV NP NERI 107(3) | S14 |

## NOTES:

1. Ensure the approximate shape of the aspalt paved waterway is an arc with a radius of 2.9 feet.
2. At inlets and other special locations, widen and shape the paved waterway to drain as approved.
3. Cross Sections show the paved waterway hinge point instead of the arc.

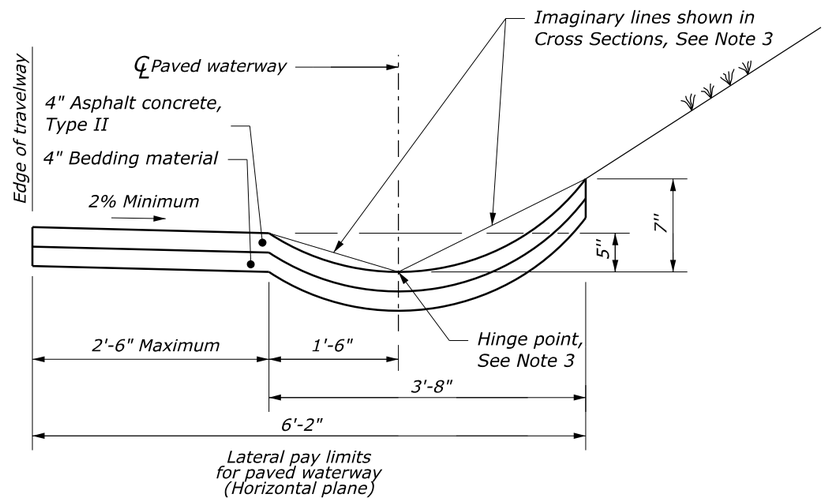


## ASPHALT PAVED WATERWAY

NO SCALE

U.S. DEPARTMENT OF TRANSPORTATION, FHWA
OFFICE OF FEDERAL LANDS HIGHWAY

**PAVED WATERWAY, TYPE 5 (ASPHALT)**

EFLHD DETAIL
E608-05A

SPECIFICATION
FP-24, FP-14

9 February 2026 3:47 PM M:\PROJECTS\neri\107(3)\HWY_DES\CADD\Std-Det\S14-E608-05A.dgn [Sheet]

| PROJECT | SHEET NUMBER |
|---|---|
| WV NP NERI 107(3) | S15 |

NOTE:

*Place 3 inches minimum aggregate bed course under all curb and gutter.*

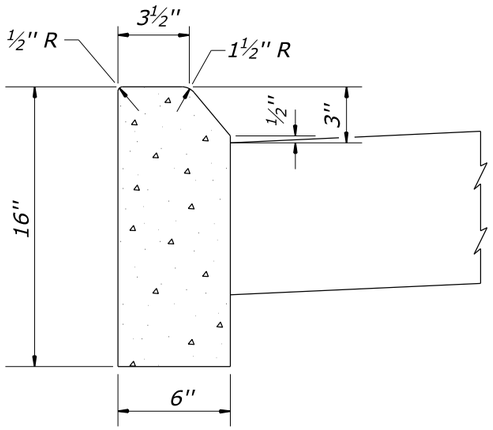


16-INCH DEPTH
(MOUNTABLE)

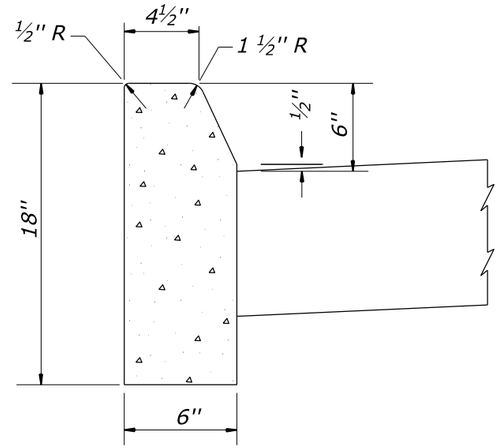


18-INCH DEPTH
(NON- MOUNTABLE)

## PORTLAND CEMENT CONCRETE CURB

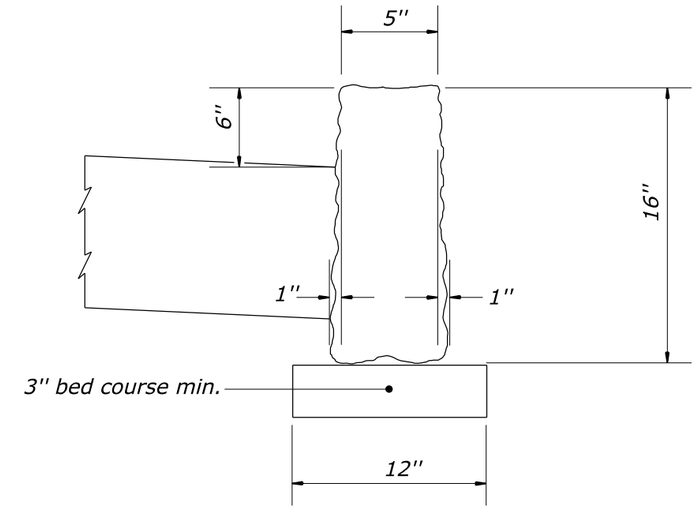


## STONE CURB

16-INCH DEPTH
(NON-MOUNTABLE)

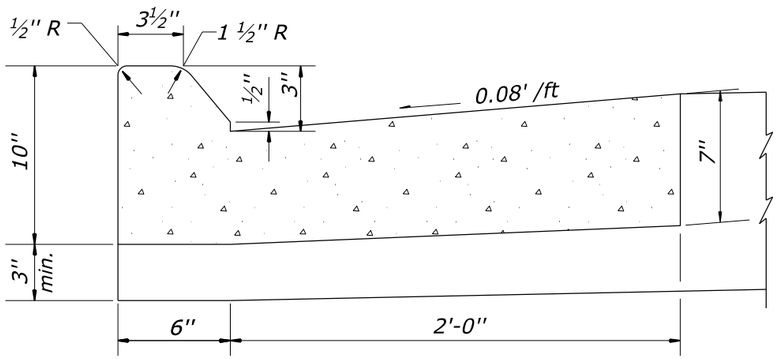


10-INCH DEPTH
(MOUNTABLE)

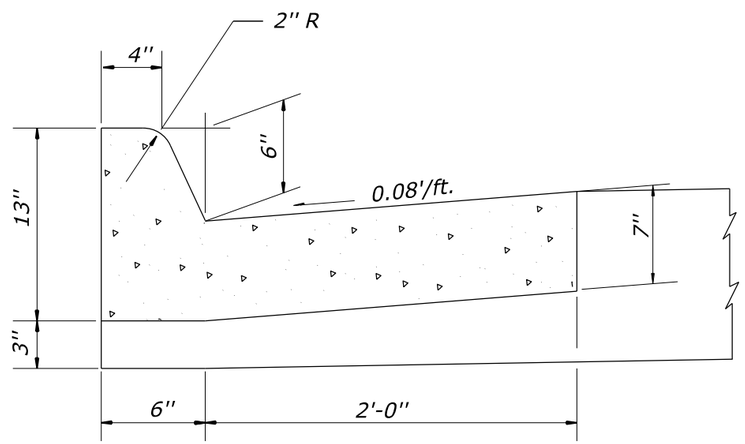


13-INCH DEPTH
(NON- MOUNTABLE)

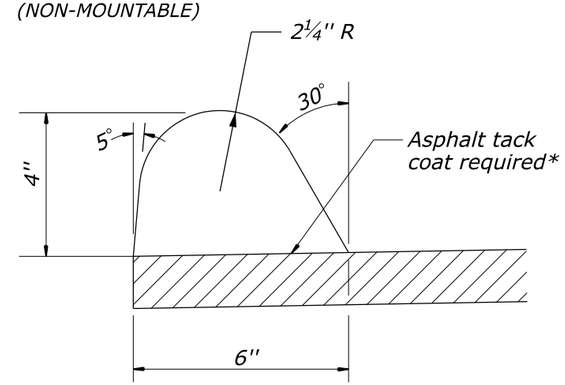


## ASPHALT CONCRETE CURB

4-INCH DEPTH
(NON-MOUNTABLE)

* Asphalt tack coat may be rapid curing liquid asphalt or emulsified asphalt.

## PORTLAND CEMENT CONCRETE CURB AND GUTTER

NO SCALE

| U.S. DEPARTMENT OF TRANSPORTATION, FHWA<br>OFFICE OF FEDERAL LANDS HIGHWAY | EFLHD DETAIL<br>E609-01 |
|---|---|
| **CURBS** | SPECIFICATION<br>FP-24. FP-14 |
| | APPROVED FOR USE<br>05/2024 |

M:\PROJECTS\nerf\107(3)\HWY_DES\CADD\Std-Det\S15-E609-01.dgn [Sheet]
16 May 2025 3:31 PM

| PROJECT | SHEET NUMBER |
|---|---|
| WV NP NERI 107(3) | S16 |

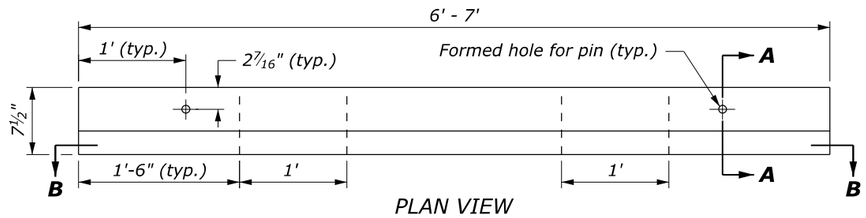


PLAN VIEW

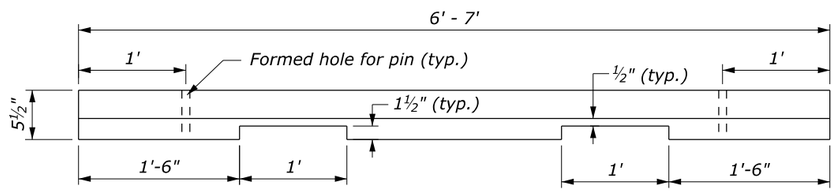


SECTION B-B

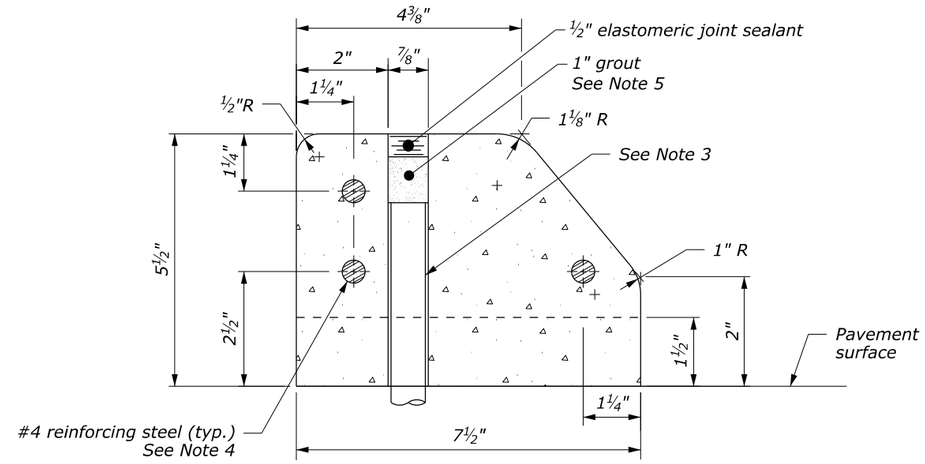


SECTION A-A

## CONCRETE WHEELSTOP WITH DRAIN

## NOTES:

1. Center wheelstops between and perpendicular to stall lines.
2. Variations in wheelstops will be allowed to meet manufacturer's standards as approved.
3. Pin the wheelstops in place according to Subsection 609.09.
4. Extend the reinforcing steel to within 1 inch of ends of wheelstop.
5. Place grout conforming to Subsection 701.04(a)(2) as shown.

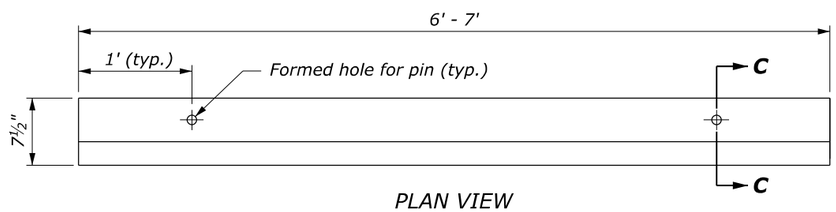


PLAN VIEW

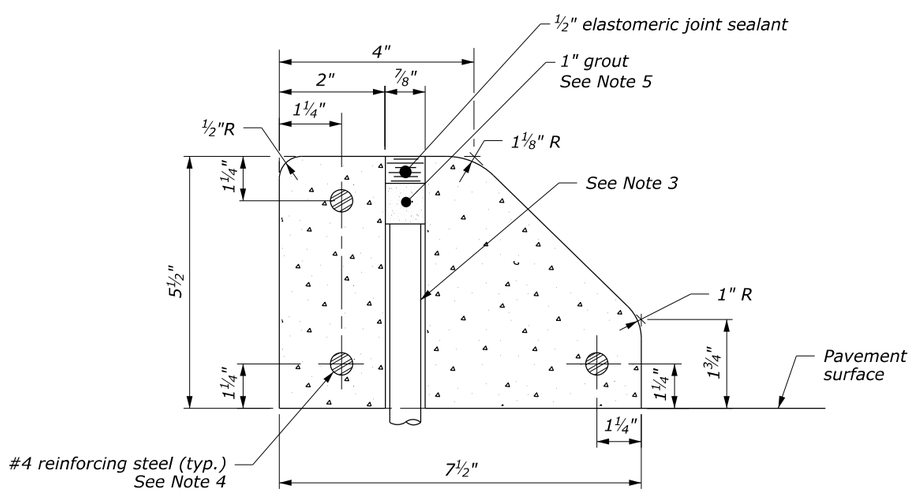


SECTION C-C

## CONCRETE WHEELSTOP WITHOUT DRAIN

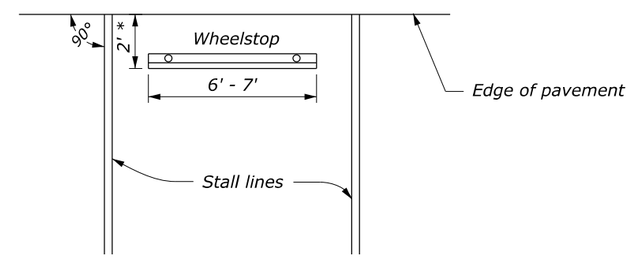


HEAD-ON PARKING

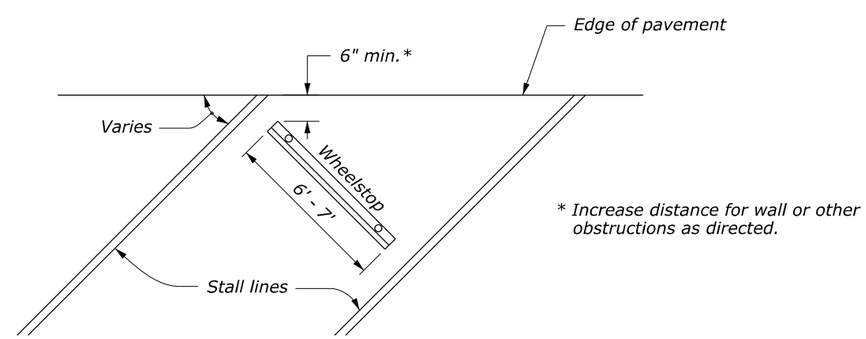


* Increase distance for wall or other obstructions as directed.

ANGULAR PARKING

## WHEELSTOP LAYOUT

NO SCALE

| U.S. DEPARTMENT OF TRANSPORTATION, FHWA OFFICE OF FEDERAL LANDS HIGHWAY | EFLHD DETAIL E609-03 |
|---|---|
| **CONCRETE WHEELSTOP** | SPECIFICATION FP-24 |
| | APPROVED FOR USE 05/2024 |

M:\PROJECTS\nerl\107(3)\HWY_DES\CADD\Std-Det\S16-E609-03.dgn [Sheet]
10 February 2026 8:39 AM

| PROJECT | SHEET NUMBER |
|---|---|
| WV NP NERI 107(3) | S17 |

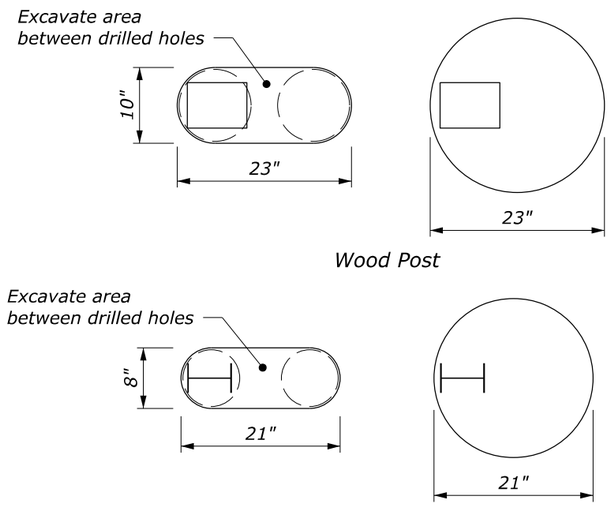


**PLAN VIEW**

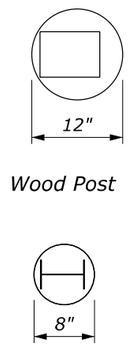


**PLAN VIEW**

## NOTE:

1. Use this standard when posts cannot be embedded to the minimum depth shown on Standard 617-10, 617-11, 617-31 or 617-32.
2. Unless otherwise specified, use either the circular or the oblong hole configuration for Case 1 conditions.
3. Use crushed coarse aggregate conforming to Section 703 "Coarse aggregate for concrete" or granular backfill for "Underdrain pipe with geotextile".
4. Place crushed coarse aggregate according to the post requirements in Section 617.
5. Treat field cut galvanized steel post surfaces that expose the base metal with two coats of zinc-oxide paint.

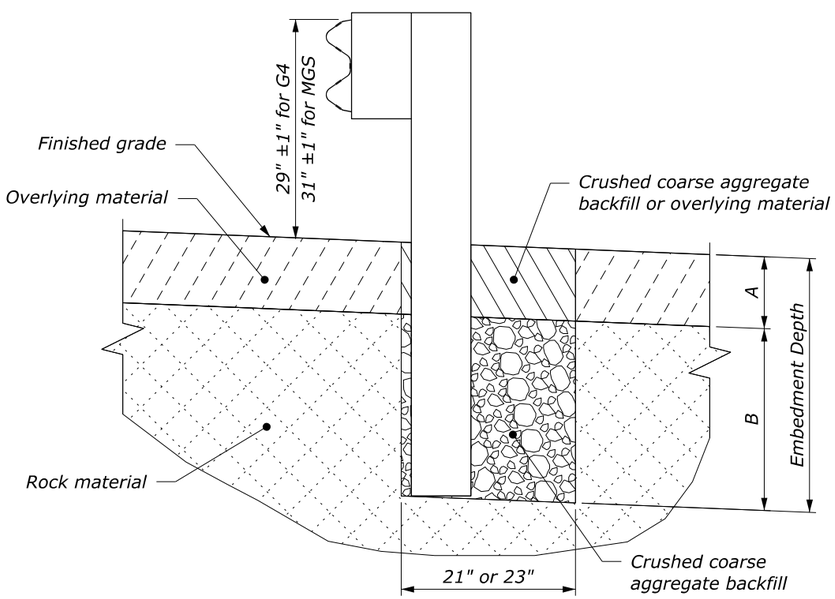


**ELEVATION**

*Case 1: Overlying material depth (A) is 18" or less*

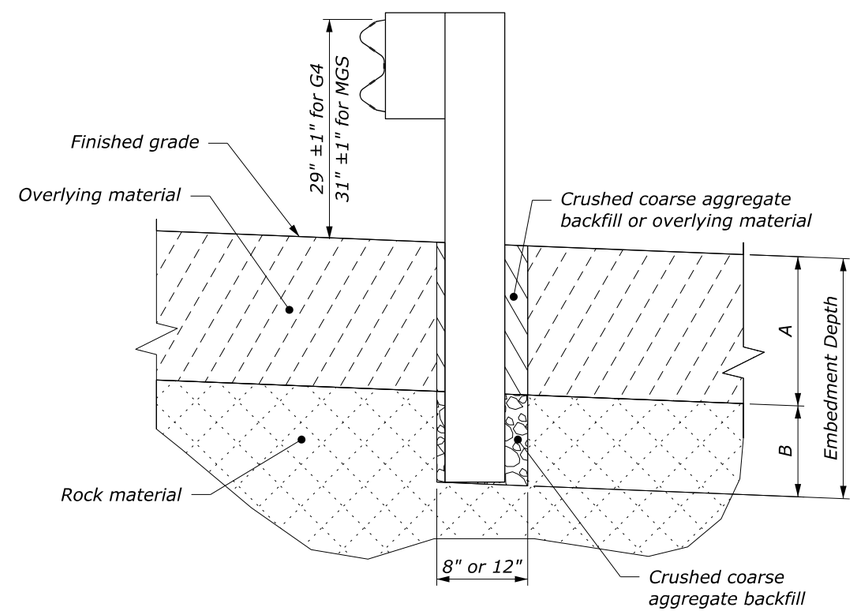


**ELEVATION**

*Case 2: Overlying material depth (A) is greater than 18"*

| POST EMBEDMENT DIMENSIONS | | | |
|---|---|---|---|
| HOLE TYPE | EMBEDMENT DEPTH | OVERLYING MATERIAL (A) | DRILLING DEPTH (B) |
| Case 1 | 24" to 42" | 0 to 18" | 24" |
| Case 2 | 30" to 42" | > 18" to 30" | 12" |
| | 42" | > 30" | 42" - A |

NO SCALE

U.S. DEPARTMENT OF TRANSPORTATION, FHWA
OFFICE OF FEDERAL LANDS HIGHWAY

**MGS AND G4 W-BEAM GUARDRAIL INSTALLATION IN ROCK**

FLH STANDARD 617-13

SPECIFICATION FP-24, FP-14

APPROVED FOR USE 1/2024

M:\PROJECTS\nerl\107(3)\HWY_DES\CADD\Std-Det\S17-Std617-13.dgn [Std 617-13]
10 February 2026 8:38 AM

| PROJECT | SHEET NUMBER |
|---|---|
| WV NP NERI 107(3) | S18 |

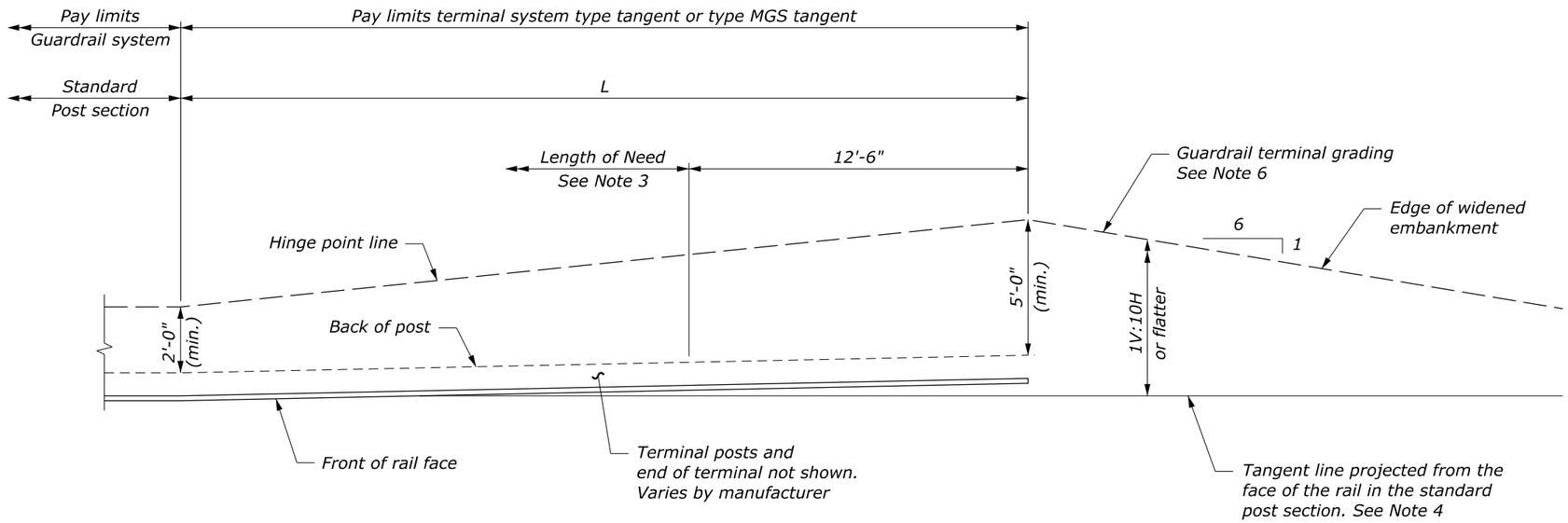


PLAN

## PREFERRED GRADING

| TEST LEVEL | L (FT) |
|---|---|
| 2 (≤ 45 mph) | 25 |
| 3 (> 45 mph) | 37.5 or 50 (for G4) |
| | 50 (for MGS) |

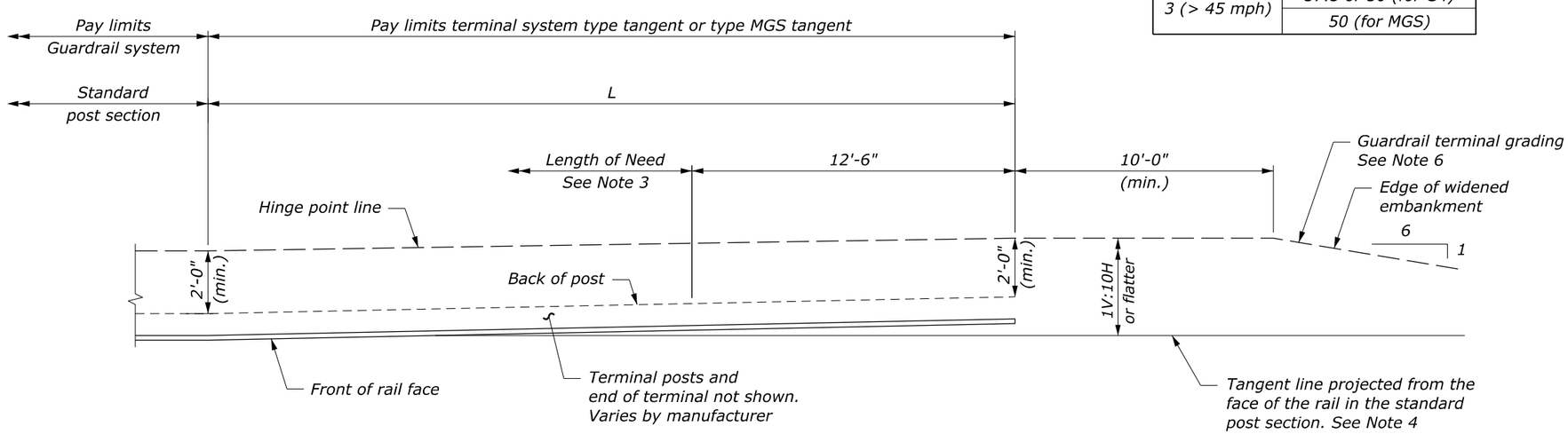


PLAN

## ALTERNATIVE GRADING

NOTE:

1. Install tangent terminal according to the manufacturer's recommendations. See manufacturer's drawings for other details.
2. Construct the terminal grading layout as shown in the staking notes or model. If no staking notes or model are provided, use the preferred grading layout as much as practical within site constraints. If necessary because of site limitations, use the alternative grading layout.
3. For design purposes, the length of need is assumed to begin at post 3. Verify the length of need with the manufacturer for a specific product. Adjust grading as necessary to install the tangent terminal according to the manufacturer's recommendations.
4. Install terminal at a 1:25 taper or flatter to position the end farther from the edge of shoulder, or use a taper according to the manufacturer's recommendations.
5. Install a reflectorized object marker on the end of the terminal.
6. Construct a 1V:4H slope outside of the guardrail terminal grading extents where practical.

NO SCALE

U.S. DEPARTMENT OF TRANSPORTATION, FHWA
OFFICE OF FEDERAL LANDS HIGHWAY

**MGS AND G4 W-BEAM GUARDRAIL TYPE TANGENT TERMINAL AND GRADING**

FLH STANDARD 617-20

SPECIFICATION FP-24

APPROVED FOR USE 1/2024

M:\PROJECTS\nerf\107(3)\HWY_DES\CADD\Std-Det\S18-Std617-20.dgn [Std 617-20]
10 February 2026 8:41 AM

| PROJECT | SHEET NUMBER |
|---|---|
| WV NP NERI 107(3) | S19 |

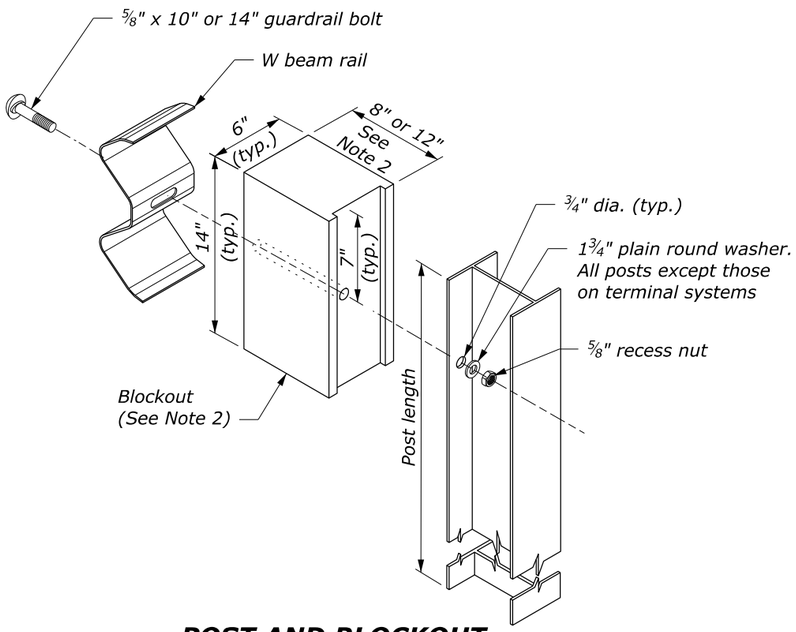


**POST AND BLOCKOUT DETAIL**

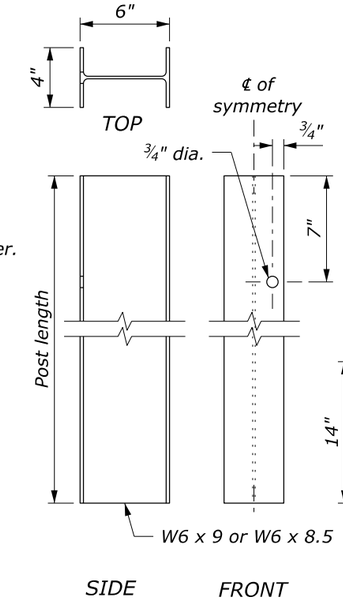


**STRUCTURAL SHAPE POST**

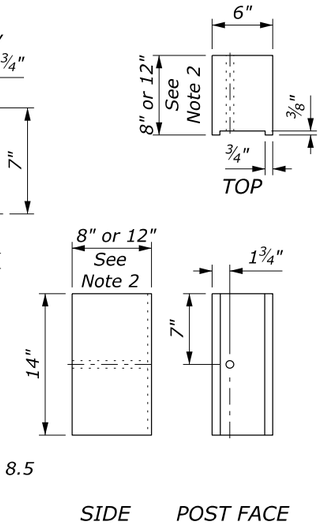


**BLOCKOUT**

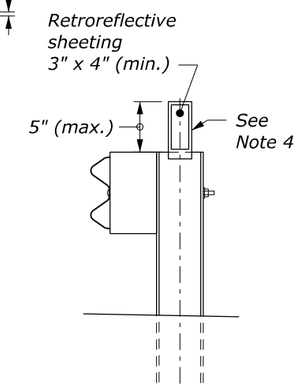


**FLEXIBLE DELINEATOR GUARDRAIL MOUNT**

## NOTE:

1. When encountering impenetrable material, one post may be omitted in locations where the typical guardrail cross section includes 2-feet (min.) between the back of the guardrail post and the hinge point. For all other locations, see Section 617 and Standard 617-13 or 617-37.
2. Size of blockout shown elsewhere in the plans. Blockout may be wood, plastic, or composite material. Use consistent material throughout the length of guardrail run.
3. Dimensional tolerances not shown or implied are intended to be those consistent with the proper functioning of the part, including its appearance, and accepted manufacturing practices.
4. Install a flexible hinged delineator every fourth post. Fasten delineator to the web of the steel post using either an adhesive or mechanical means according to the manufacturer's recommendations.

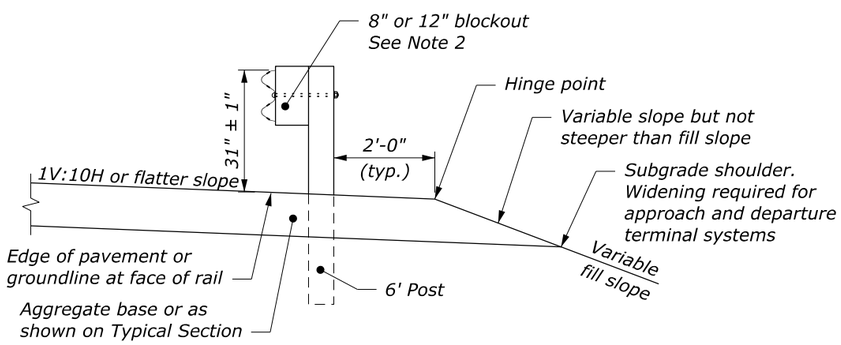


**TYPICAL GUARDRAIL CROSS SECTION 6' POST, 8" OR 12" BLOCKOUT**

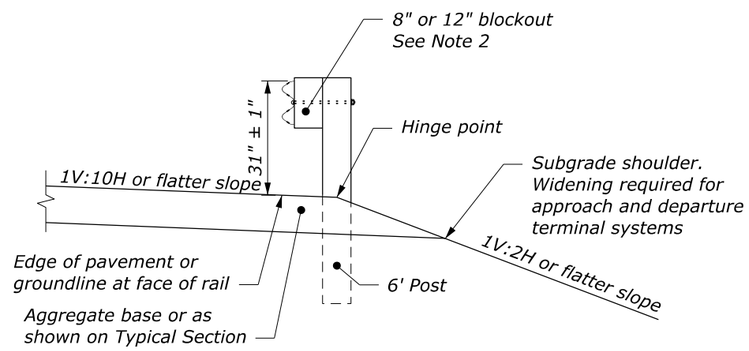


**TYPICAL GUARDRAIL CROSS SECTION 6' POST CENTERED ON HINGE, 8" OR 12" BLOCKOUT**

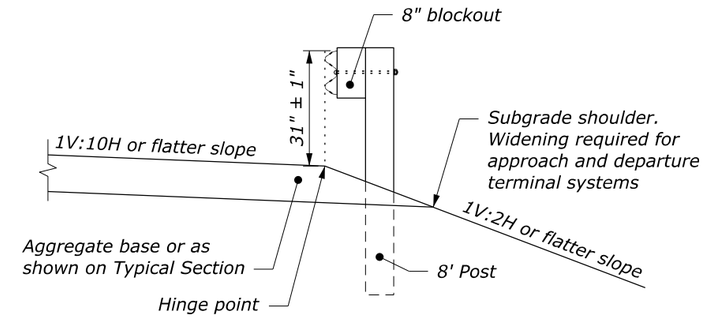


**TYPICAL GUARDRAIL CROSS SECTION 8' POST ON SLOPE, 8" BLOCKOUT**

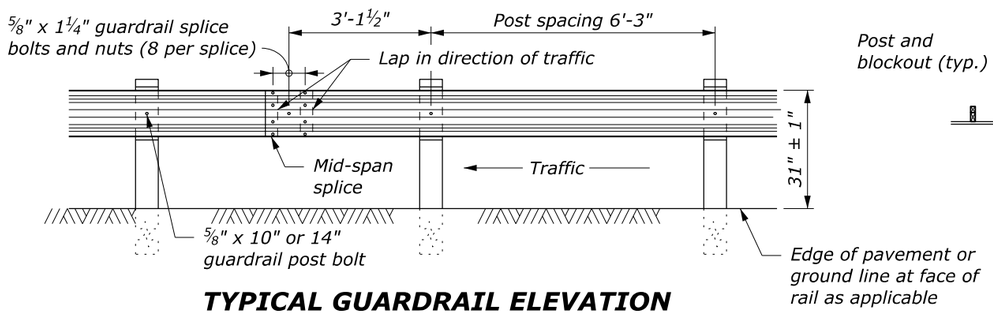


**TYPICAL GUARDRAIL ELEVATION**

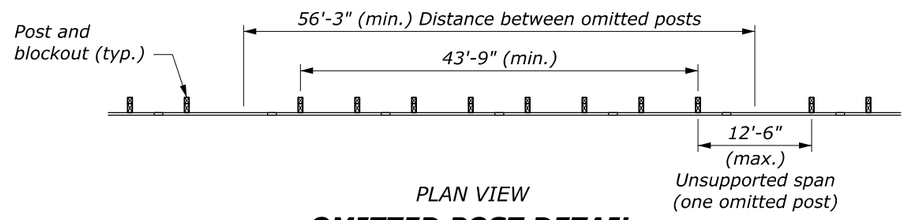


PLAN VIEW

**OMITTED POST DETAIL**

See Note 1

NO SCALE

| U.S. DEPARTMENT OF TRANSPORTATION, FHWA OFFICE OF FEDERAL LANDS HIGHWAY | FLH STANDARD 617-32 |
|---|---|
| **MGS W-BEAM GUARDRAIL STEEL POSTS** | SPECIFICATION FP-24 |
| | APPROVED FOR USE 2/2024 |

M:\PROJECTS\nerf\107(3)\HWY_DES\CADD\Std-Det\S19-Std617-32.dgn [Std 617-32]
10 February 2026 8:42 AM

| PROJECT | SHEET NUMBER |
|---|---|
| WV NP NERI 107(3) | S20 |

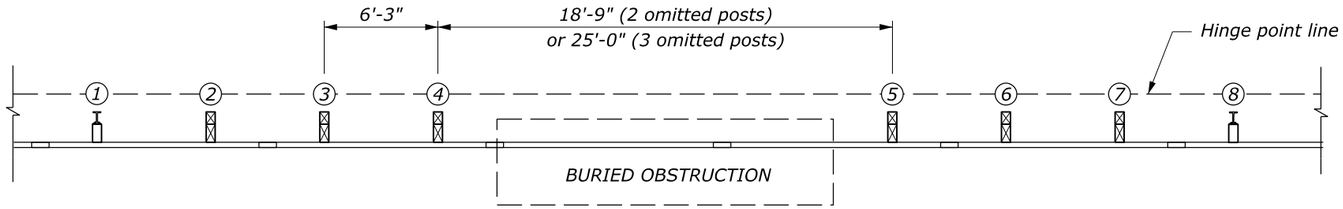


**PLAN**

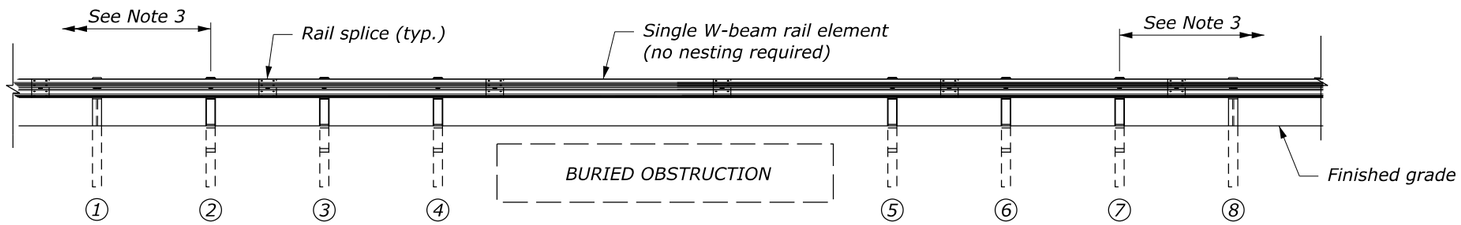


**ELEVATION**

## NOTE:

1. Posts 1 and 8 may be wood or steel.
2. Use wood posts for CRT posts.
3. The minimum length of guardrail, including the end terminals, upstream and downstream of posts 2 and 7 is 62.5 feet.
4. In locations where the culvert headwall extends above the finished grade to act as a vertical roadway curb, the maximum height of the culvert headwall above the finished grade is 2 inches.
5. See Standard 617-31 or 617-32 for other assembly details.

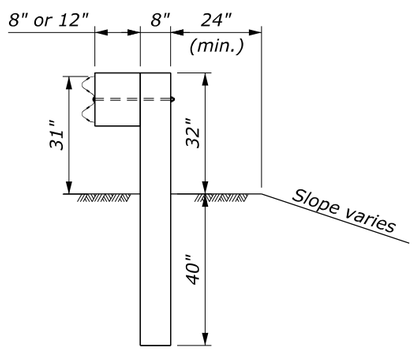


**WOOD POST DETAIL**

POST 1 AND 8
See Note 1

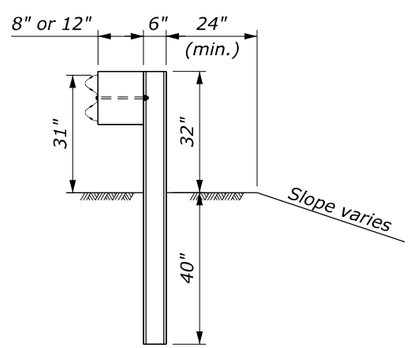


**STEEL POST DETAIL**

POST 1 AND 8
See Note 1

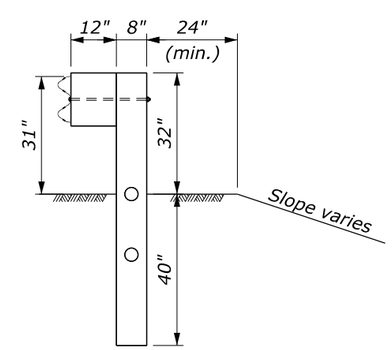


**CRT POST DETAIL**

POST 2 THRU 7
See Note 2

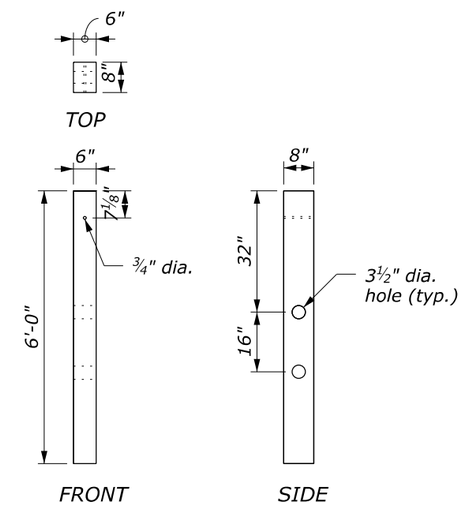


**CRT WOOD POST**

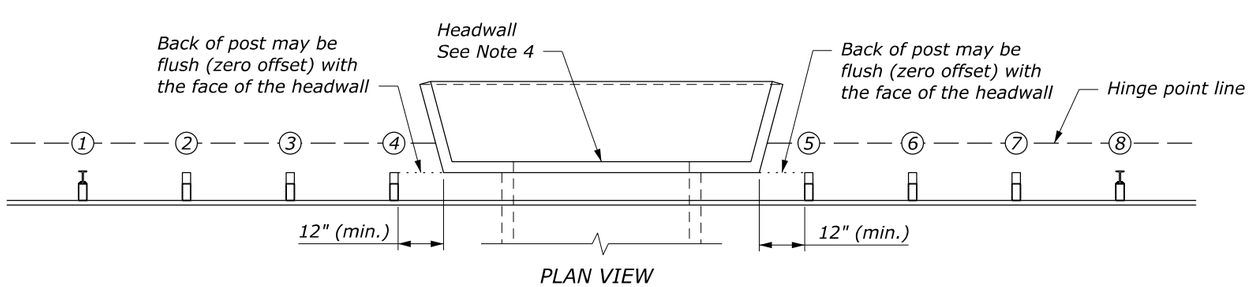


**SPAN WITH HEADWALL DETAIL**

NO SCALE

U.S. DEPARTMENT OF TRANSPORTATION, FHWA
OFFICE OF FEDERAL LANDS HIGHWAY

**MGS W-BEAM GUARDRAIL LONG-SPAN SYSTEM**

FLH STANDARD 617-37

SPECIFICATION FP-24, FP-14

APPROVED FOR USE 1/2024

M:\PROJECTS\nerl\107(3)\HWY_DES\CADD\Std-Det\S20-Std617-37.dgn [Std 617-37]
10 February 2026 8:42 AM

| PROJECT | SHEET NUMBER |
|---|---|
| WV NP NERI 107(3) | S21 |

## NOTES:

1. *When required, place topsoil before installing RECP according to Section 624.*
2. *When required, apply turf establishment according to Section 625.*
3. *Apply seed and fertilizer as recommended by the manufacturer before placing RECP.*

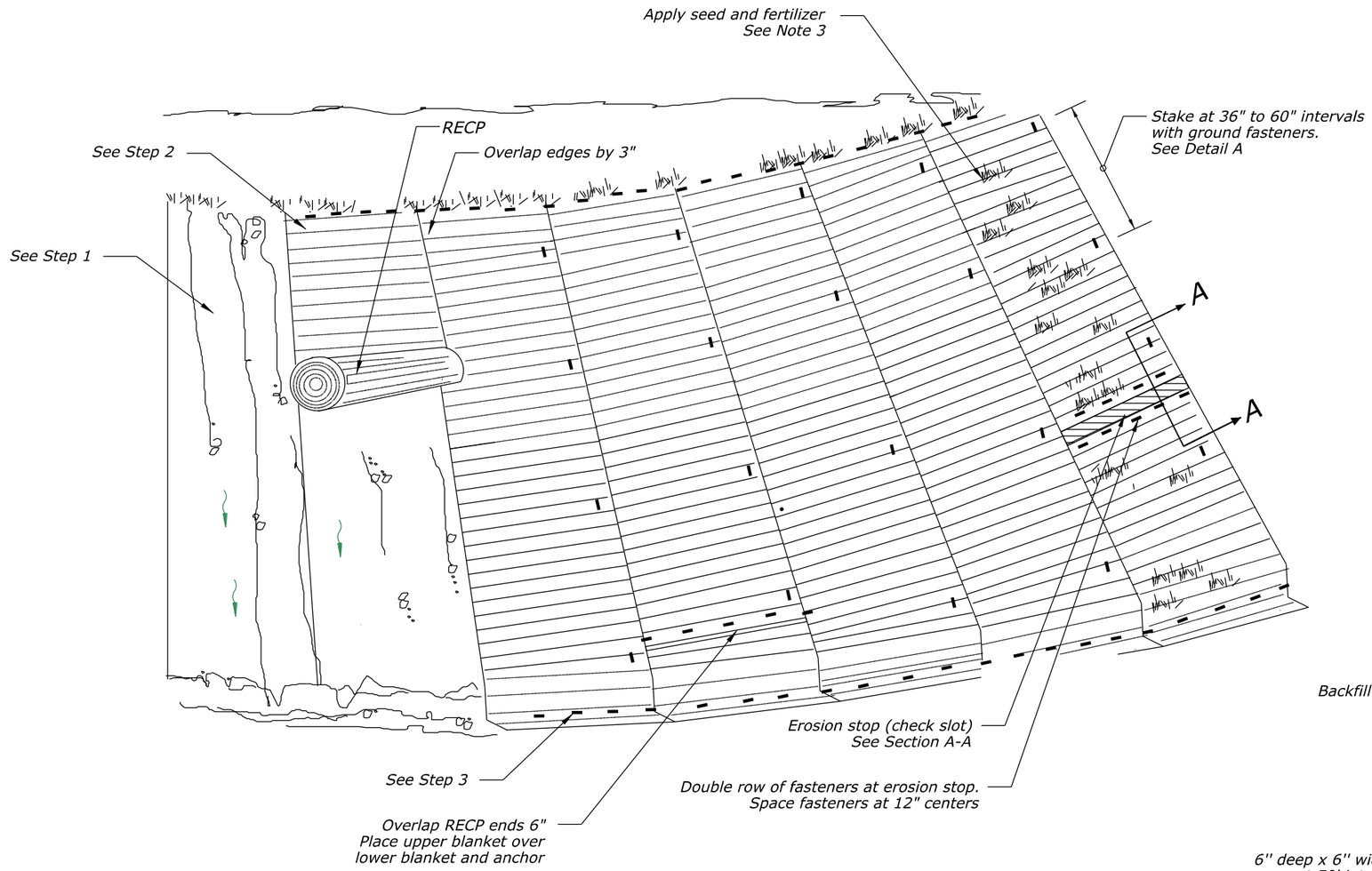


**SLOPE STABILIZATION WITH RECP**

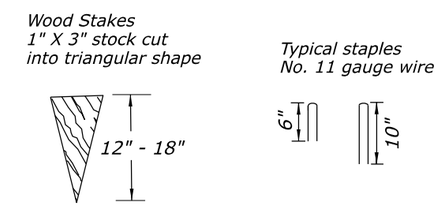


**DETAIL A**
*TYPICAL GROUND FASTENERS*

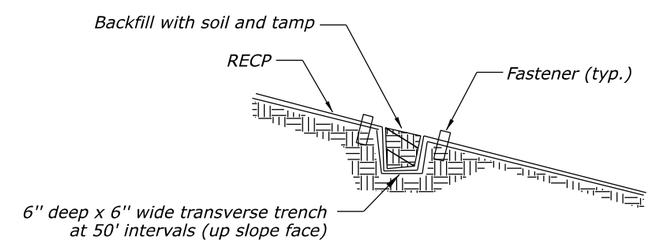


**SECTION A-A**
*EROSION STOP (CHECK SLOT)*

## INSTALLATION PROCEDURES:

*Install Rolled Erosion Control Product (RECP) along the slopes as follows:*

*Step 1: Grade, smooth, and compact slope. Remove rocks, trash, and other material which will prevent the RECP from laying flush with the ground. Do not track slope face.*

*Step 2: Unroll and lay RECP out down slope face (in the direction of flow). Anchor at top of slope. Do not stretch RECP.*

*Step 3: Secure RECP with wood or metal fasteners. See Detail A.*

*NO SCALE*

U.S. DEPARTMENT OF TRANSPORTATION, FHWA
OFFICE OF FEDERAL LANDS HIGHWAY

**SLOPE STABILIZATION WITH ROLLED EROSION CONTROL PRODUCT (RECP)**

EFLHD DETAIL
E629-01

SPECIFICATION
FP-24, FP-14

APPROVED FOR USE
05/2024

10 February 2026 8:43 AM M:\PROJECTS\nerl\107(3)\HWY_DES\CADD\Std-Det\S21-E629-01.dgn [Sheet]

| PROJECT | SHEET NUMBER |
|---|---|
| WV NP NERI 107(3) | S22 |

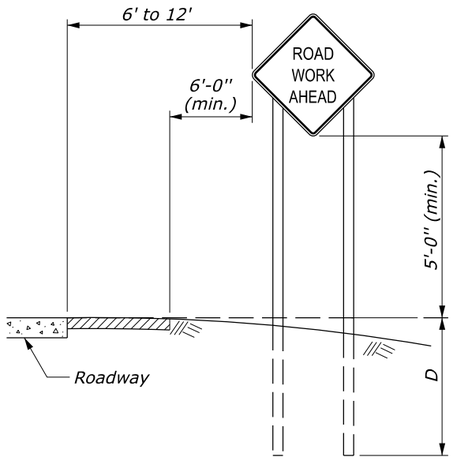


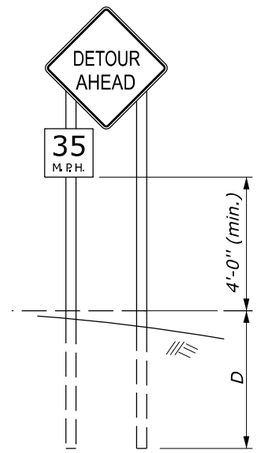


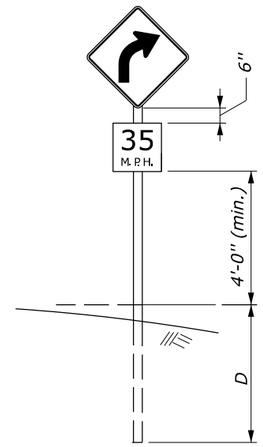


RURAL AREA

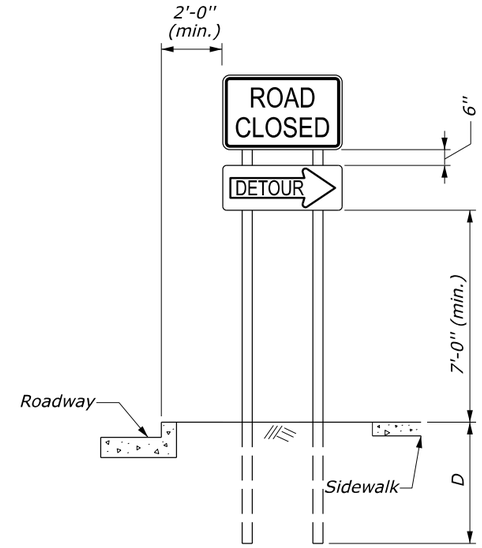


URBAN AREA

## FIXED ROADWAY SIGNS

## NOTES:

1. Mount signs that are wider than 3 feet or larger than 10 square feet on double posts.
2. All lumber dimensions are nominal.
3. Submit alternate details for portable signs. Ensure sign mounts hold the sign face in a vertical plane. Portable signs may be mounted lower than fixed signs when approved. Ensure all portable sign supports are crashworthy.
4. When parking is permitted within 200 feet of the sign, mount the sign a minimum of 7 feet above the pavement surface.
5. When approved by the CO and the Utility Company, utility poles may be used for sign mounting.
6. For 4- by 6-inch and greater posts, see the Breakaway Sign Support View. If breakaway design cannot be used due to post spacing, place the sign outside the clearzone or shield with a barrier. Do not place holes in posts of non-breakaway signs.
7. Signs requiring 6- by 6-inch and greater posts are considered non-breakaway if multiple posts are required and the posts cannot be spaced a minimum of 7 feet apart.

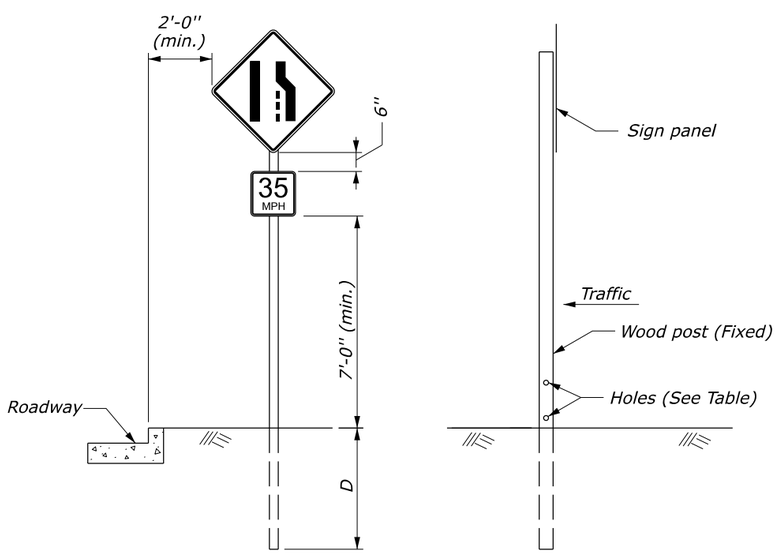


BREAKAWAY SIGN SUPPORT
(FIXED SIGNS 4'' X 6'' AND GREATER POSTS)
See Notes 6 and 7

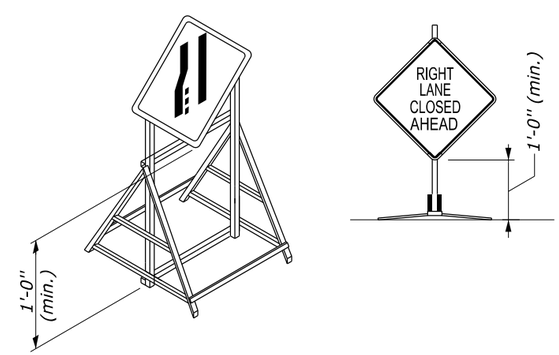


**PORTABLE SIGNS**
See Notes 3 and 4

POST SIZE TABLE

| POST SIZE | D | HOLE DIAMETER | MAXIMUM SIGN AREA (SQFT) | | | |
|---|---|---|---|---|---|---|
| | | | 1 Post | 2 Post | 3 Post | 4 Post |
| 4'' x 4'' | 4' | None Required | 10 | 20 | | |
| 4'' x 6'' | 4' | 1.5'' | | 35 | 50 | 70 |
| 6'' x 6'' | 5' | 2'' | | 50 | 75 | 100 |
| 6'' x 8'' | 5' | 3'' | | 85 | 125 | 165 |

NO SCALE

U.S. DEPARTMENT OF TRANSPORTATION, FHWA
OFFICE OF FEDERAL LANDS HIGHWAY

**TEMPORARY TRAFFIC CONTROL SIGN MOUNTING**

EFLHD DETAIL
E635-01

SPECIFICATION
FP-24, FP-14

APPROVED FOR USE
06/2024

M:\PROJECTS\nerf\107(3)\HWY_DES\CADD\Std-Det\S22-E635-01.dgn [Sheet]
10 February 2026 8:45 AM

| PROJECT | SHEET NUMBER |
|---|---|
| WV NP NERI 107(3) | S23 |

| LENGTH AND SPACING TABLE | | | | |
|---|---|---|---|---|
| APPROACH SPEED* MPH | BUFFER SPACE LENGTH FEET | CHANNELIZING DEVICE SPACING IN FEET | | |
| | | TAPER AREA | BUFFER SPACE | WORK SPACE |
| 20 | 115 | 20 | 40 | 40 |
| 25 | 155 | 20 | 50 | 50 |
| 30 | 200 | 20 | 60 | 60 |
| 35 | 250 | 20 | 70 | 70 |
| 40 | 305 | 20 | 80 | 80 |
| 45 | 360 | 20 | 90 | 90 |
| 50 | 425 | 20 | 100 | 100 |
| 55 | 495 | 20 | 110 | 110 |
| 60 | 570 | 20 | 120 | 120 |
| 65 | 645 | 20 | 130 | 130 |
| 70 | 730 | 20 | 140 | 140 |

* Approach speed based on the regulatory posted speed, not the advisory speed.

| SIGN SPACING TABLE | | | |
|---|---|---|---|
| ROAD TYPE | DISTANCE BETWEEN SIGNS IN FEET | | |
| | A | B | C |
| Urban and Rural 30 mph and less | 100 | 100 | 100 |
| Urban and Rural 35 mph to 50 mph | 350 | 350 | 350 |
| Rural greater than 50 mph | 500 | 500 | 500 |
| Expressway / Freeway | 1000 | 1500 | 2640 |

## NOTE:

1. Signs are shown for one direction of travel only. Place signs similar to those depicted for the opposite direction of travel.
2. Final location and spacing of devices may be changed to fit field conditions as approved.
3. For pilot car operation, mount the PILOT CAR FOLLOW ME (G20-4) sign at a conspicuous location on the rear of vehicle. Prominently display the name of the Contractor on the pilot car.
4. If closure is completely within the project limits, eliminate the ROAD WORK AHEAD (W20-1) and END ROAD WORK (G20-2) signs.
5. For project specific minimum width, refer to the Special Contract Requirements, Section 156.
6. Do not allow equipment, materials, or vehicles to be parked or stored in the buffer space.

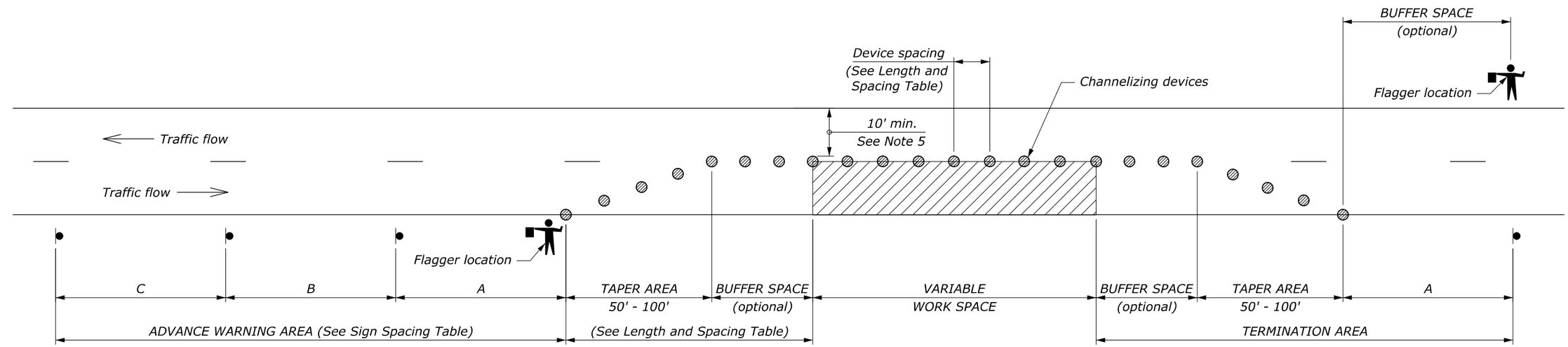


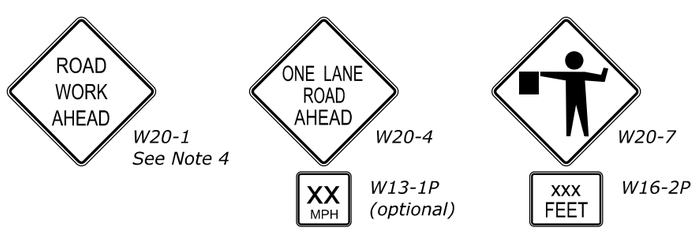


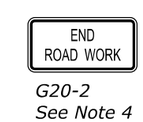


NO SCALE

U.S. DEPARTMENT OF TRANSPORTATION, FHWA
OFFICE OF FEDERAL LANDS HIGHWAY

**TEMPORARY TRAFFIC CONTROL SINGLE LANE CLOSURE LAYOUT (WITH FLAGGERS)**

FLH STANDARD 635-6

SPECIFICATION FP-24, FP-14

APPROVED FOR USE 2/2024

M:\PROJECTS\nerl\107(3)\HWY_DES\CADD\Std-Det\S23-Std635-6.dgn [Std 635-6]
10 February 2026 8:49 AM

| PROJECT | SHEET NUMBER |
|---|---|
| WV NP NERI 107(3) | S24 |

| LENGTH TABLE | |
|---|---|
| APPROACH SPEED* MPH | BUFFER SPACE LENGTH FEET |
| 20 | 115 |
| 25 | 155 |
| 30 | 200 |
| 35 | 250 |
| 40 | 305 |
| 45 | 360 |
| 50 | 425 |
| 55 | 495 |
| 60 | 570 |
| 65 | 645 |
| 70 | 730 |

* Approach speed based on the regulatory posted speed, not the advisory speed.

| SIGN SPACING TABLE | | | |
|---|---|---|---|
| ROAD TYPE | DISTANCE BETWEEN SIGNS IN FEET | | |
| | A | B | C |
| Urban and Rural 30 mph and less | 100 | 100 | 100 |
| Urban and Rural 35 mph to 50 mph | 350 | 350 | 350 |
| Rural greater than 50 mph | 500 | 500 | 500 |
| Expressway / Freeway | 1000 | 1500 | 2640 |

## NOTE:

1. Signs are shown for one direction of travel only. Place signs similar to those depicted for the opposite direction of travel.
2. A single signal installation is acceptable, on the right-hand side of the road, if it has two signal faces that are at least 8 feet apart and meets the other requirements of the MUTCD.
3. Install and operate temporary traffic control signals in accordance with the requirements of the MUTCD. Establish signal timing using a qualified engineer. When the signal is changed to the flashing mode either manually or automatically, ensure red signal indications are flashed to both approaches.
4. Final location and spacing of devices may be changed to fit field conditions as approved. If signals are moved, determine revised signal timing using a qualified engineer.
5. For paved roadway surfaces, install stop lines complying with the MUTCD. Remove existing conflicting pavement markings and raised markers between the work space and the stop line. Add no-passing lines in advance of the stop line that comply with the MUTCD. Removable pavement markings may be used for stop lines and no-passing pavement markings.
6. If closure is completely within the project limits, eliminate the ROAD WORK AHEAD (W20-1) and END ROAD WORK (G20-2) signs.
7. For project specific minimum width, refer to Special Contract Requirements, Section 156.
8. Do not allow equipment, materials, or vehicles to be parked or stored in the buffer space.

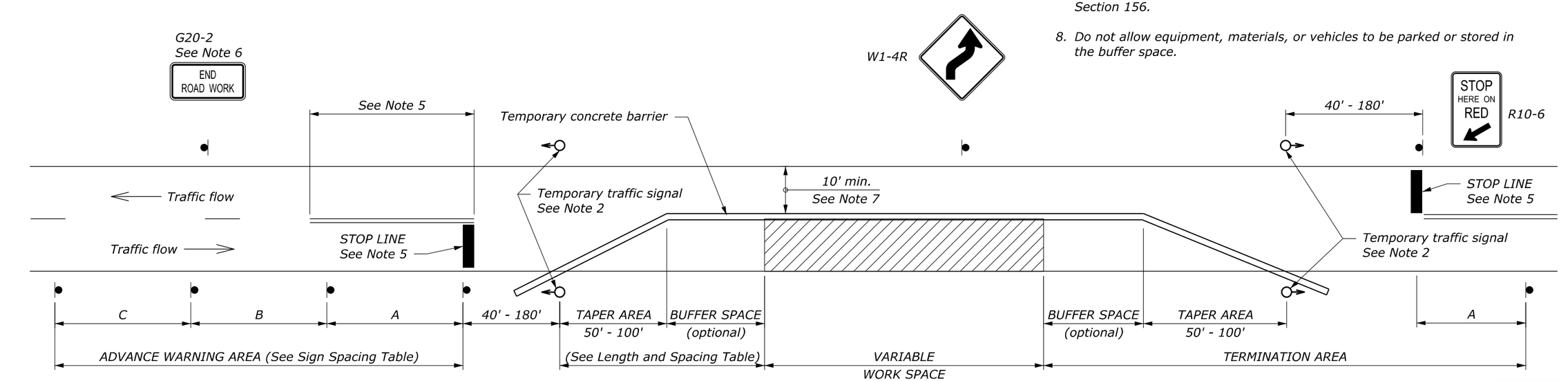


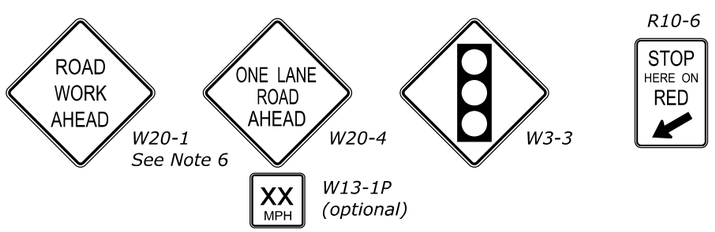


NO SCALE

U.S. DEPARTMENT OF TRANSPORTATION, FHWA
OFFICE OF FEDERAL LANDS HIGHWAY

**TEMPORARY TRAFFIC CONTROL SINGLE LANE CLOSURE LAYOUT (WITH SIGNALS)**

EFLHD DETAIL
635-9A

SPECIFICATION
FP-24, FP-14

M:\PROJECTS\nerl\107(3)\HWY_DES\CADD\Std-Det\S24-635-9A.dgn [Std 635-9]
10 February 2026 8:50 AM

| PROJECT | SHEET NUMBER |
|---|---|
| WV NP NERI 107(3) | T01 |

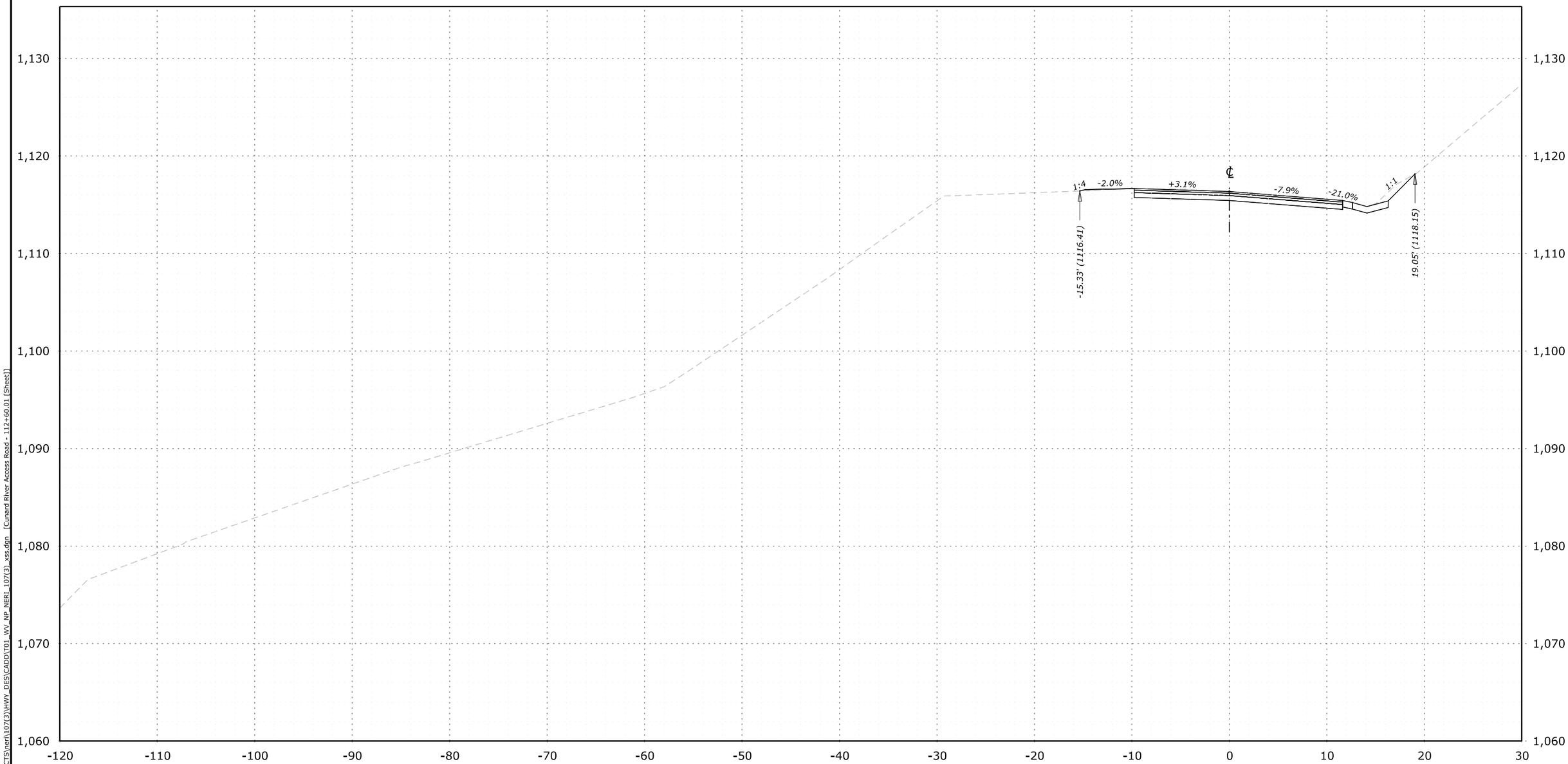


**112+60.01**
**Des Grade = 1,116.36**
**Subgrade = 1,115.44**
**Original Grnd = 1,116.36**

M:\PROJECTS\neri\107(3)\HWY_DES\CADD\T01_WV_NP_NERI_107(3)_xss.dgn [Cunard River Access Road - 112+60.01 [Sheet]]

24 June 2025 2:32 PM

| NO. | DATE | BY | REVISIONS |
|---|---|---|---|
| | | | |
| | | | |
| | | | |
| | | | |

U.S. DEPARTMENT OF TRANSPORTATION
FEDERAL HIGHWAY ADMINISTRATION
OFFICE OF FEDERAL LANDS HIGHWAY

NEW RIVER GORGE NATIONAL PARK AND PRESERVE

# CROSS SECTIONS

CUNARD RIVER ACCESS ROAD

112+60.01

| PROJECT | SHEET NUMBER |
|---|---|
| WV NP NERI 107(3) | T02 |

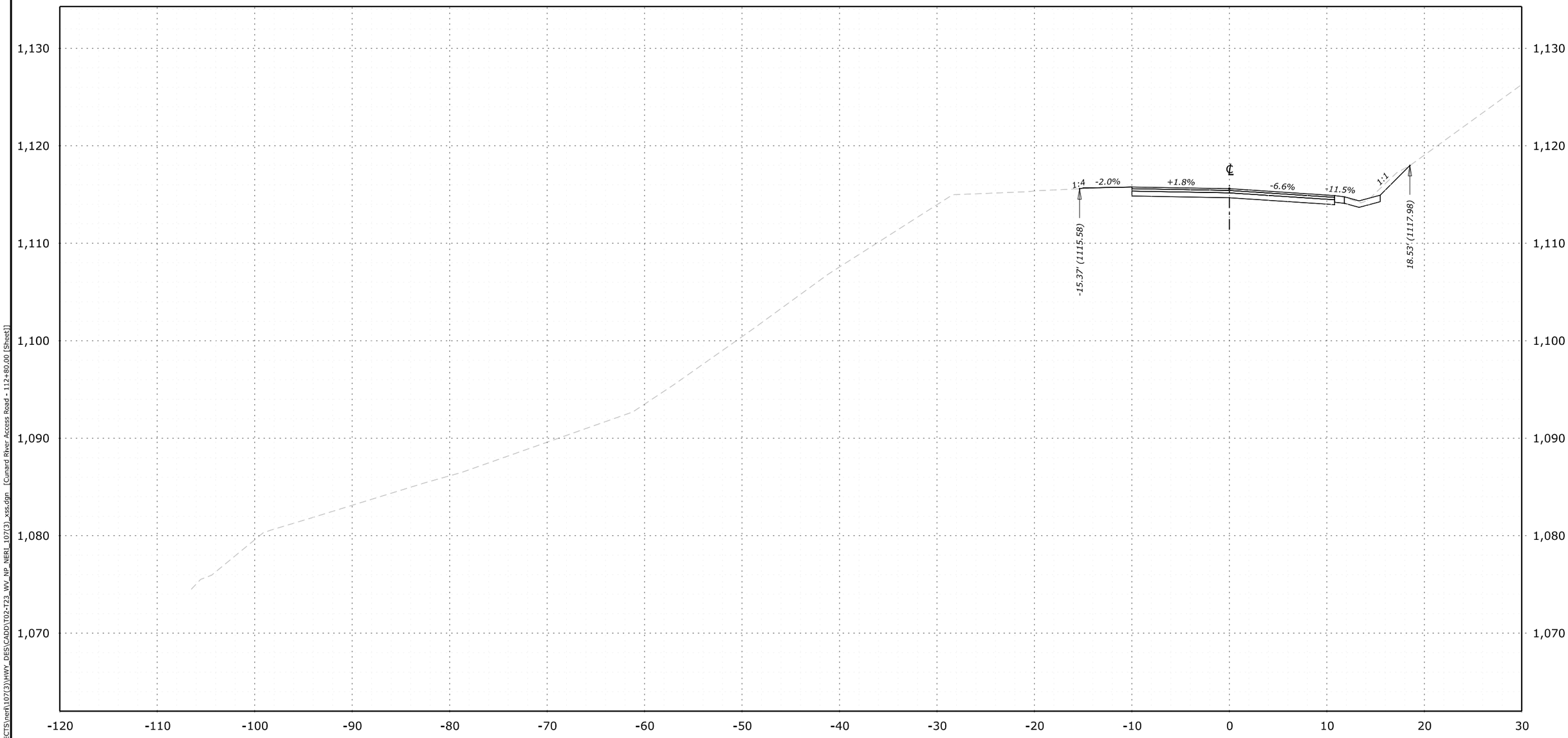


**112+80.00**
**Des Grade = 1,115.60**
**Subgrade = 1,114.68**
**Original Grnd = 1,115.62**

| NO. | DATE | BY | REVISIONS |
|---|---|---|---|
| | | | |
| | | | |
| | | | |
| | | | |

U.S. DEPARTMENT OF TRANSPORTATION
FEDERAL HIGHWAY ADMINISTRATION
OFFICE OF FEDERAL LANDS HIGHWAY

NEW RIVER GORGE NATIONAL PARK AND PRESERVE

# CROSS SECTIONS

CUNARD RIVER ACCESS ROAD

112+80

C:\PROJECTS\neri\107(3)\HWY_DES\CADD\T02-T23_WV_NP_NERI_107(3)_xss.dgn [Cunard River Access Road - 112+80.00 [Sheet]]
23 June 2025 3:54 PM

| PROJECT | SHEET NUMBER |
|---|---|
| WV NP NERI 107(3) | T03 |

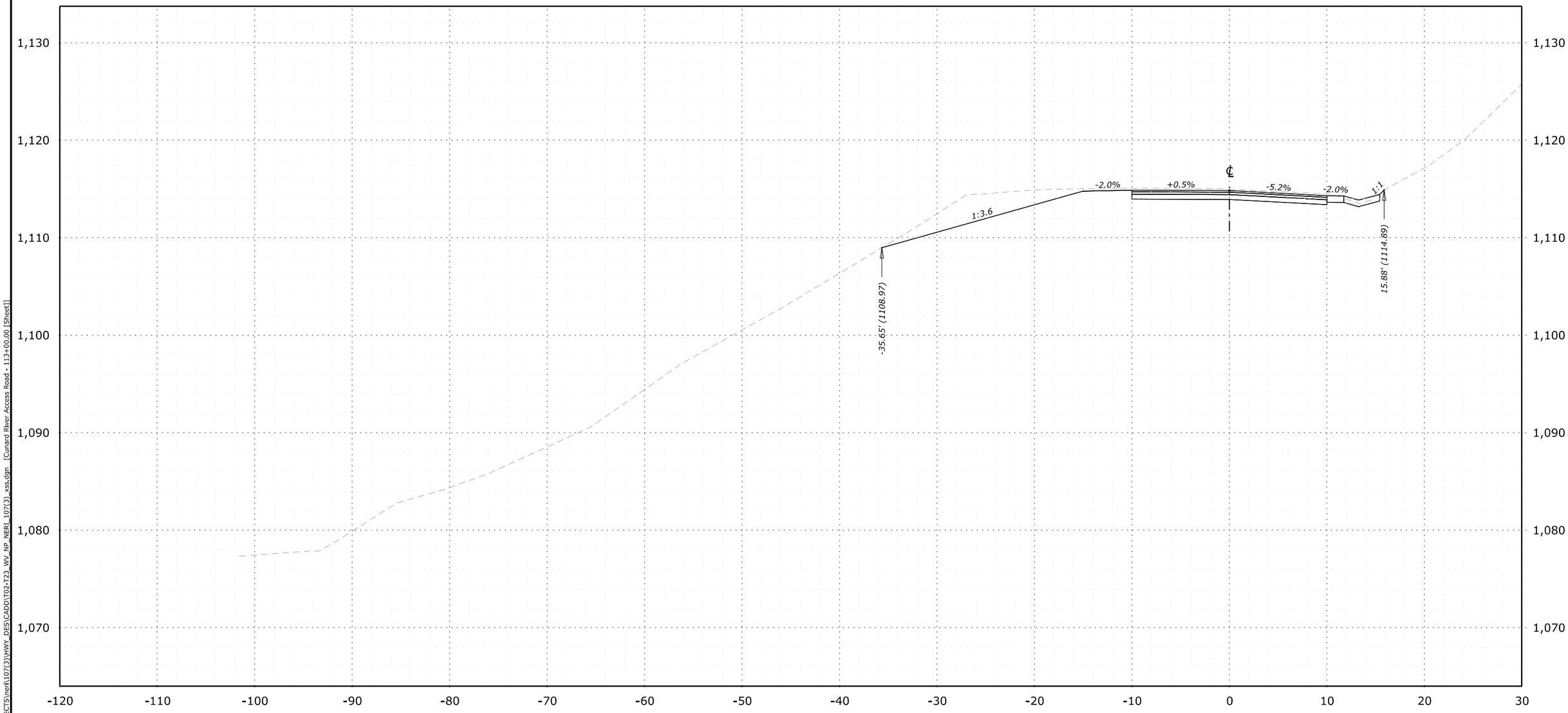


**113+00.00**
**Des Grade = 1,114.84**
**Subgrade = 1,113.92**
**Original Grnd = 1,114.98**

| NO. | DATE | BY | REVISIONS |
|---|---|---|---|
| | | | |
| | | | |
| | | | |
| | | | |

U.S. DEPARTMENT OF TRANSPORTATION
FEDERAL HIGHWAY ADMINISTRATION
OFFICE OF FEDERAL LANDS HIGHWAY

NEW RIVER GORGE NATIONAL PARK AND PRESERVE

# CROSS SECTIONS

CUNARD RIVER ACCESS ROAD

113+00

C:\PROJECTS\neri\107(3)\HWY_DES\CADD\T02-T23_WV_NP_NERI_107(3)_xss.dgn [Cunard River Access Road - 113+00.00 [Sheet]]
23 June 2025 3:55 PM

| PROJECT | SHEET NUMBER |
|---|---|
| WV NP NERI 107(3) | T04 |

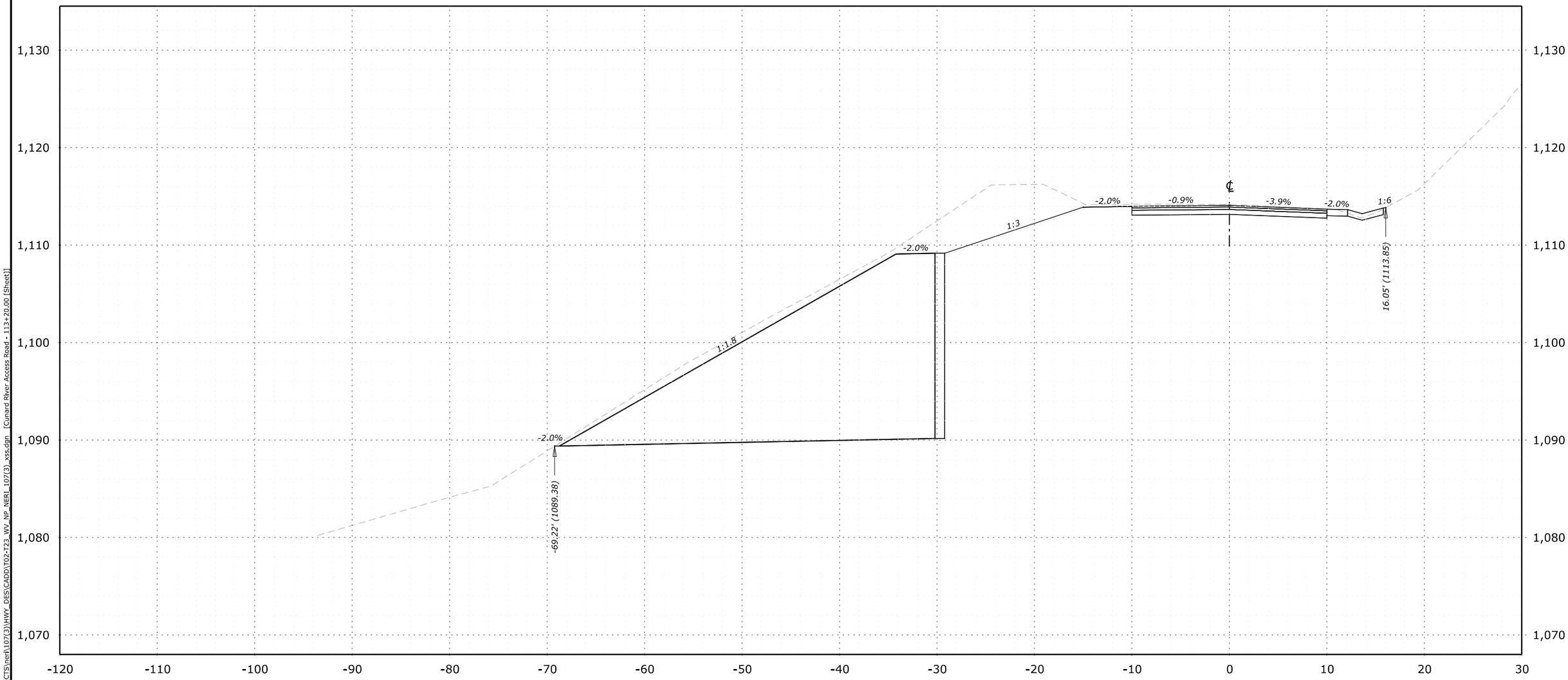


**113+20.00**
**Des Grade = 1,114.08**
**Subgrade = 1,113.16**
**Original Grnd = 1,114.15**

| NO. | DATE | BY | REVISIONS |
|---|---|---|---|
| | | | |
| | | | |
| | | | |
| | | | |

U.S. DEPARTMENT OF TRANSPORTATION
FEDERAL HIGHWAY ADMINISTRATION
OFFICE OF FEDERAL LANDS HIGHWAY

NEW RIVER GORGE NATIONAL PARK AND PRESERVE

# CROSS SECTIONS

CUNARD RIVER ACCESS ROAD

113+20

C:\PROJECTS\neri\107(3)\HWY_DES\CADD\T02-T23_WV_NP_NERI_107(3)_xss.dgn [Cunard River Access Road - 113+20.00 [Sheet]]
23 June 2025 3:56 PM

| PROJECT | SHEET NUMBER |
|---|---|
| WV NP NERI 107(3) | T05 |

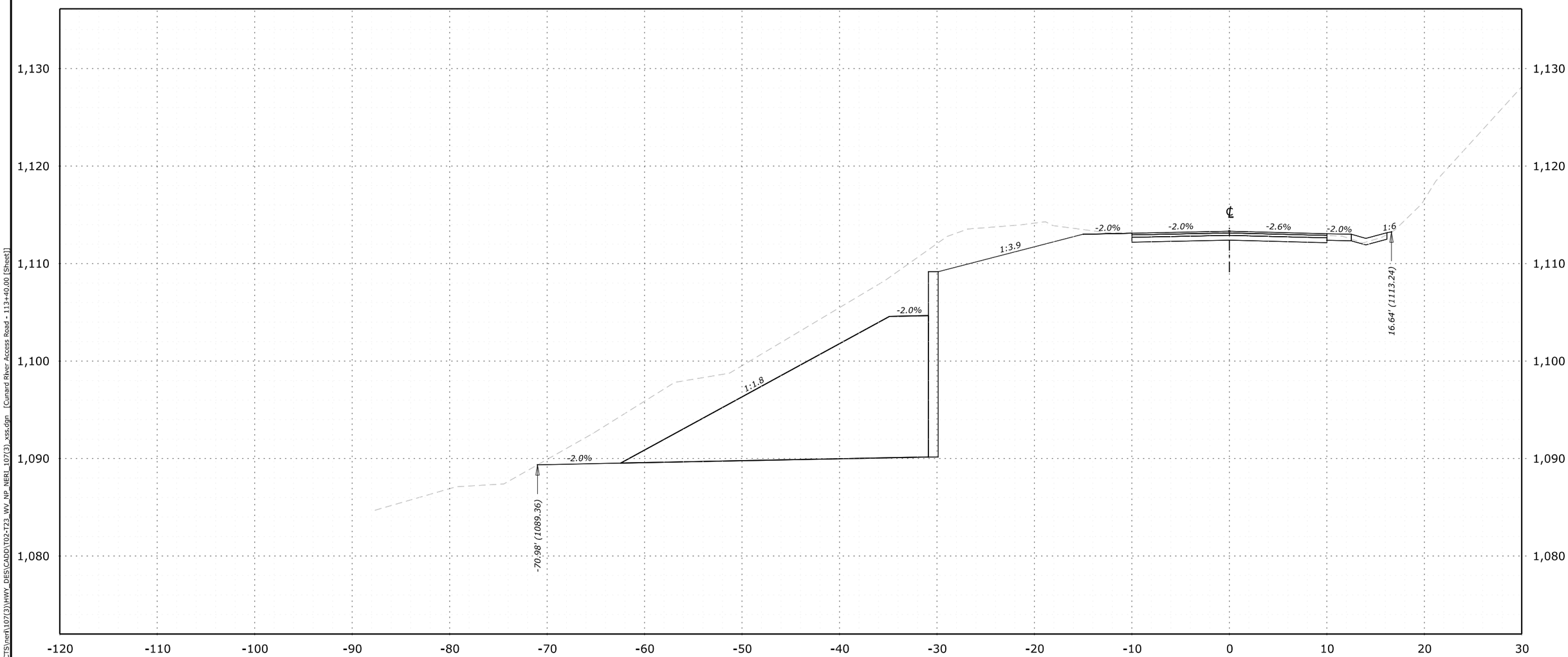


**113+40.00**
**Des Grade = 1,113.32**
**Subgrade = 1,112.40**
**Original Grnd = 1,113.19**

C:\PROJECTS\ned\107(3)\HWY_DES\CADD\T02-T23_WV_NP_NERI_107(3)_xss.dgn [Cunard River Access Road - 113+40.00 [Sheet]]

23 June 2025 3:56 PM

| NO. | DATE | BY | REVISIONS |
|---|---|---|---|
| | | | |
| | | | |
| | | | |
| | | | |

U.S. DEPARTMENT OF TRANSPORTATION
FEDERAL HIGHWAY ADMINISTRATION
OFFICE OF FEDERAL LANDS HIGHWAY

NEW RIVER GORGE NATIONAL PARK AND PRESERVE

# CROSS SECTIONS

CUNARD RIVER ACCESS ROAD

113+40

| PROJECT | SHEET NUMBER |
|---|---|
| WV NP NERI 107(3) | T06 |

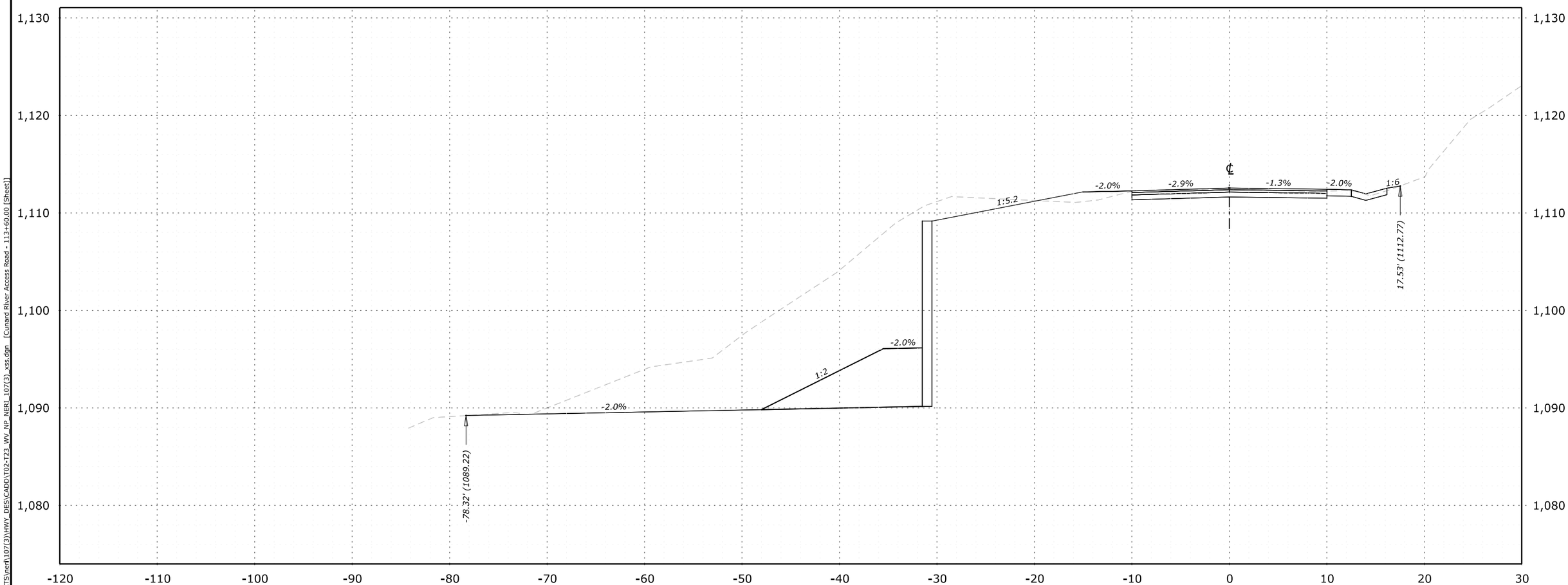


**113+60.00**
**Des Grade = 1,112.56**
**Subgrade = 1,111.64**
**Original Grnd = 1,112.42**

C:\PROJECTS\neri\107(3)\HWY_DES\CADD\T02-T23_WV_NP_NERI_107(3)_xss.dgn [Cunard River Access Road - 113+60.00 [Sheet]]

23 June 2025 4:04 PM

| NO. | DATE | BY | REVISIONS |
|---|---|---|---|
| | | | |
| | | | |
| | | | |
| | | | |

U.S. DEPARTMENT OF TRANSPORTATION
FEDERAL HIGHWAY ADMINISTRATION
OFFICE OF FEDERAL LANDS HIGHWAY

NEW RIVER GORGE NATIONAL PARK AND PRESERVE

# CROSS SECTIONS

CUNARD RIVER ACCESS ROAD

113+60

| PROJECT | SHEET NUMBER |
|---|---|
| WV NP NERI 107(3) | T07 |

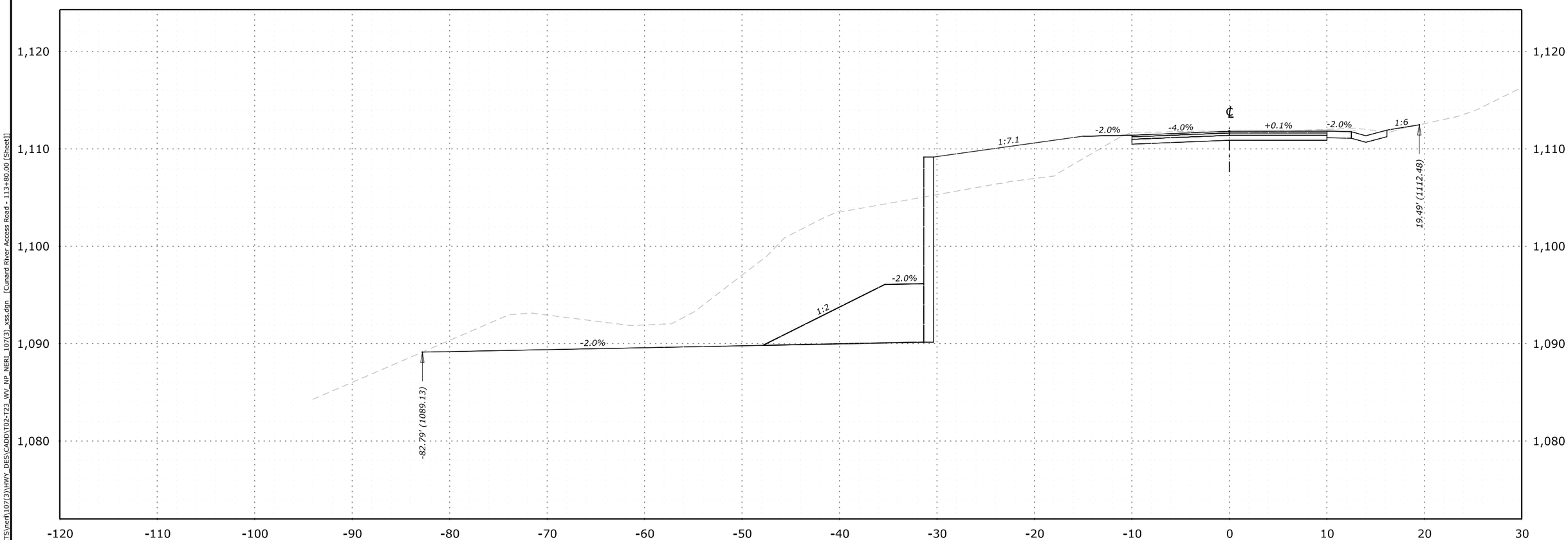


**113+80.00**
**Des Grade = 1,111.81**
**Subgrade = 1,110.89**
**Original Grnd = 1,111.83**

| NO. | DATE | BY | REVISIONS |
|---|---|---|---|
| | | | |
| | | | |
| | | | |
| | | | |

U.S. DEPARTMENT OF TRANSPORTATION
FEDERAL HIGHWAY ADMINISTRATION
OFFICE OF FEDERAL LANDS HIGHWAY

NEW RIVER GORGE NATIONAL PARK AND PRESERVE

# CROSS SECTIONS

CUNARD RIVER ACCESS ROAD

113+80

C:\PROJECTS\neri\107(3)\HWY_DES\CADD\T02-T23_WV_NP_NERI_107(3)_xss.dgn [Cunard River Access Road - 113+80.00 [Sheet]]
23 June 2025 3:57 PM

| PROJECT | SHEET NUMBER |
|---|---|
| WV NP NERI 107(3) | T08 |

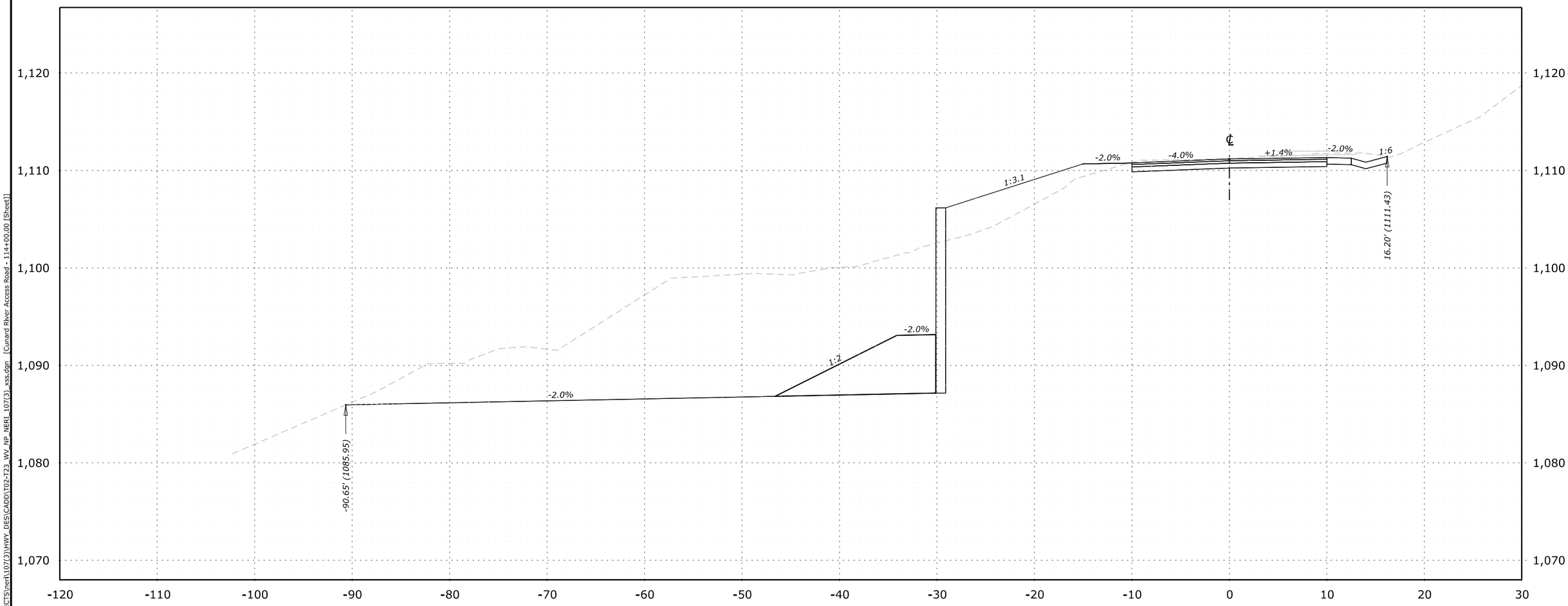


**114+00.00**
**Des Grade = 1,111.18**
**Subgrade = 1,110.26**
**Original Grnd = 1,111.26**

| NO. | DATE | BY | REVISIONS |
|---|---|---|---|
| | | | |
| | | | |
| | | | |
| | | | |

U.S. DEPARTMENT OF TRANSPORTATION
FEDERAL HIGHWAY ADMINISTRATION
OFFICE OF FEDERAL LANDS HIGHWAY

NEW RIVER GORGE NATIONAL PARK AND PRESERVE

# CROSS SECTIONS

CUNARD RIVER ACCESS ROAD

114+00

C:\PROJECTS\neri\107(3)\HWY_DES\CADD\T02-T23_WV_NP_NERI_107(3)_xss.dgn [Cunard River Access Road - 114+00.00 [Sheet]]
23 June 2025 3:58 PM

| PROJECT | SHEET NUMBER |
|---|---|
| WV NP NERI 107(3) | T09 |

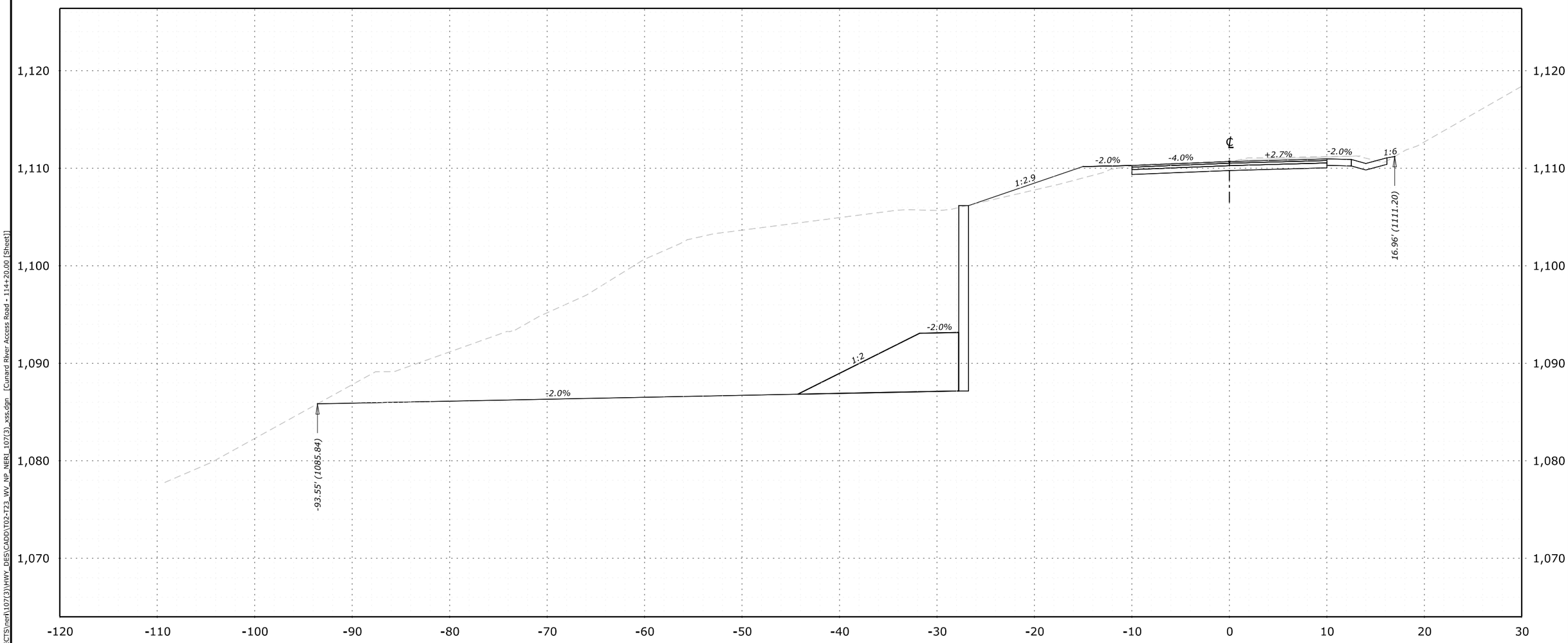


**114+20.00**
**Des Grade = 1,110.68**
**Subgrade = 1,109.76**
**Original Grnd = 1,110.75**

| NO. | DATE | BY | REVISIONS |
|---|---|---|---|
| | | | |
| | | | |
| | | | |
| | | | |

U.S. DEPARTMENT OF TRANSPORTATION
FEDERAL HIGHWAY ADMINISTRATION
OFFICE OF FEDERAL LANDS HIGHWAY

NEW RIVER GORGE NATIONAL PARK AND PRESERVE

# CROSS SECTIONS

CUNARD RIVER ACCESS ROAD

114+20

C:\PROJECTS\neri\107(3)\HWY_DES\CADD\T02-T23_WV_NP_NERI_107(3)_xss.dgn [Cunard River Access Road - 114+20.00 [Sheet]]
23 June 2025 3:58 PM

| PROJECT | SHEET NUMBER |
|---|---|
| WV NP NERI 107(3) | T10 |

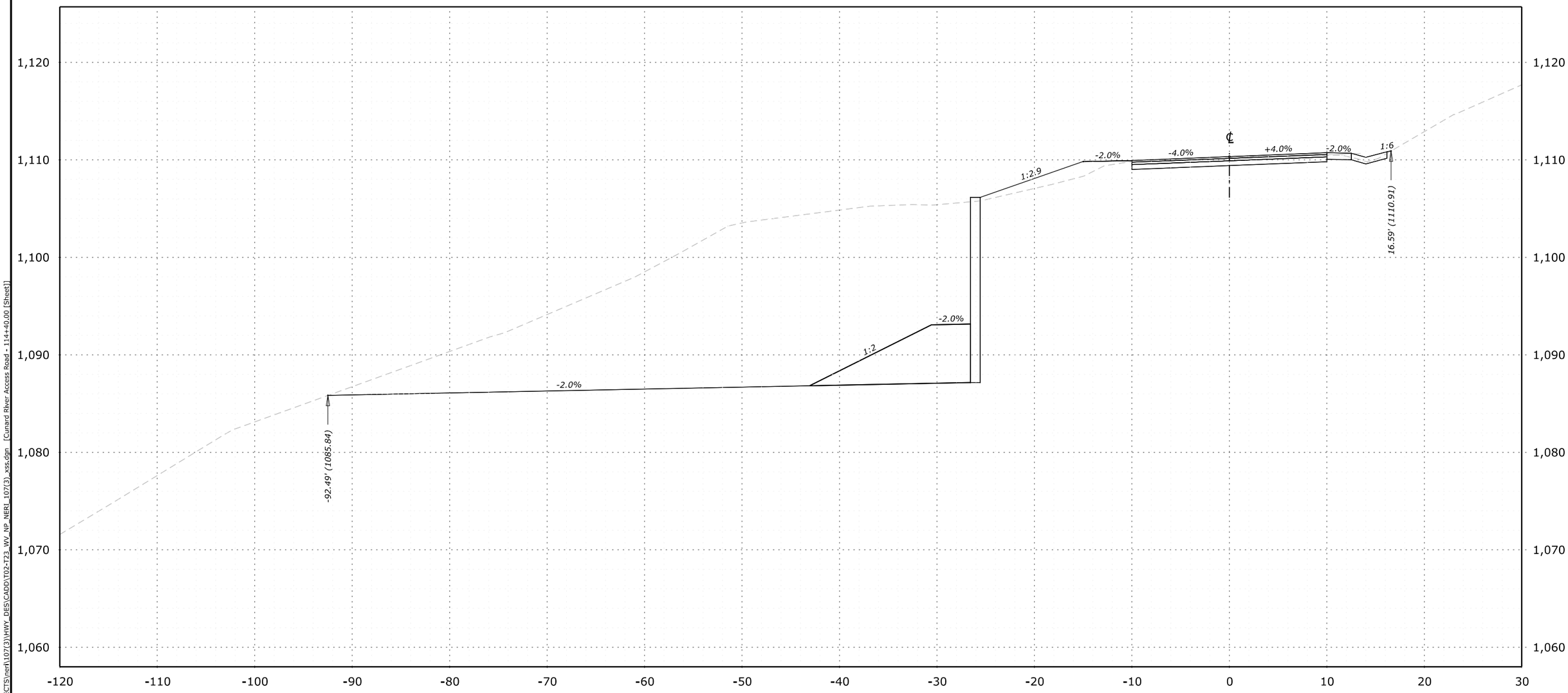


**114+40.00**
**Des Grade = 1,110.33**
**Subgrade = 1,109.41**
**Original Grnd = 1,110.21**

| NO. | DATE | BY | REVISIONS |
|---|---|---|---|
| | | | |
| | | | |
| | | | |
| | | | |

U.S. DEPARTMENT OF TRANSPORTATION
FEDERAL HIGHWAY ADMINISTRATION
OFFICE OF FEDERAL LANDS HIGHWAY

NEW RIVER GORGE NATIONAL PARK AND PRESERVE

# CROSS SECTIONS

CUNARD RIVER ACCESS ROAD

114+40

C:\PROJECTS\neri\107(3)\HWY_DES\CADD\T02-T23_WV_NP_NERI_107(3)_xss.dgn [Cunard River Access Road - 114+40.00 [Sheet]]
23 June 2025 3:58 PM

| PROJECT | SHEET NUMBER |
|---|---|
| WV NP NERI 107(3) | T11 |

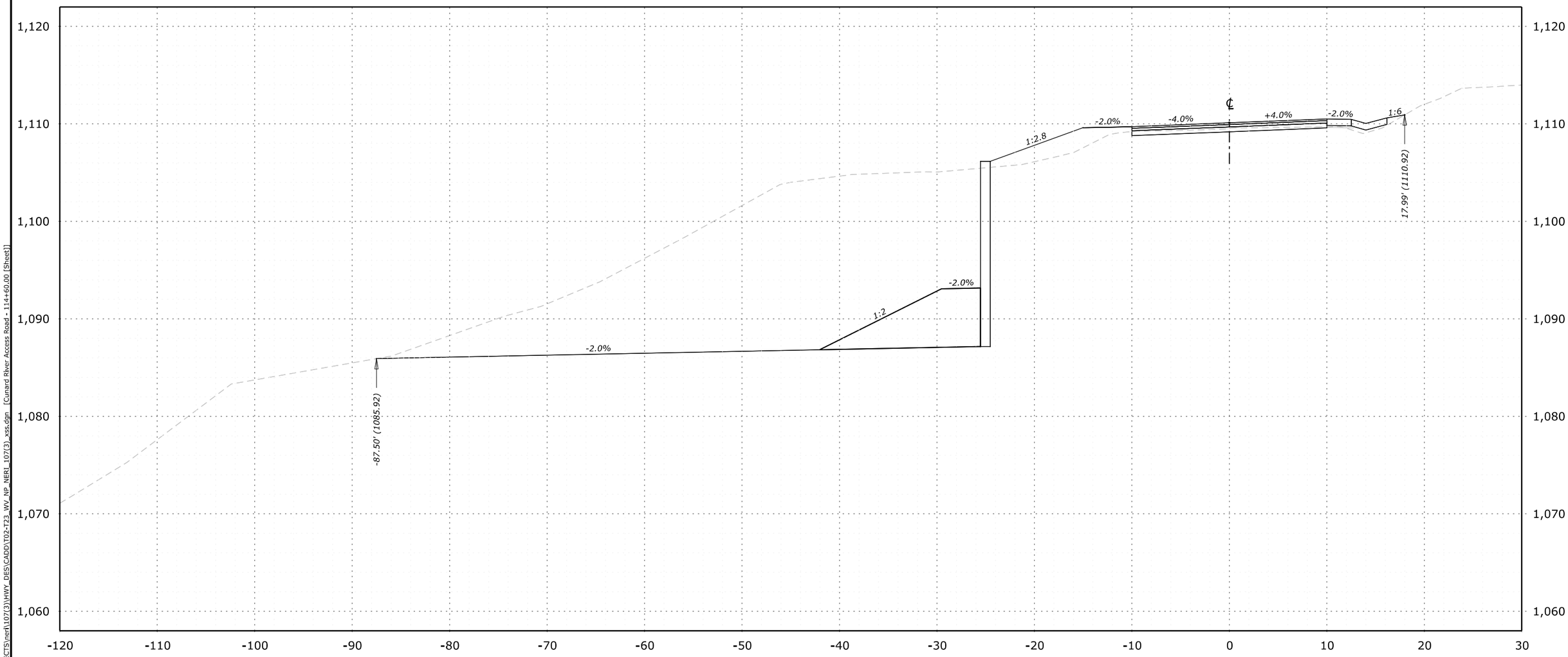


**114+60.00**
**Des Grade = 1,110.11**
**Subgrade = 1,109.19**
**Original Grnd = 1,109.53**

C:\PROJECTS\neri\107(3)\HWY_DES\CADD\T02-T23_WV_NP_NERI_107(3)_xss.dgn [Cunard River Access Road - 114+60.00 [Sheet]]

23 June 2025 4:06 PM

| NO. | DATE | BY | REVISIONS |
|---|---|---|---|
| | | | |
| | | | |
| | | | |
| | | | |

U.S. DEPARTMENT OF TRANSPORTATION
FEDERAL HIGHWAY ADMINISTRATION
OFFICE OF FEDERAL LANDS HIGHWAY

NEW RIVER GORGE NATIONAL PARK AND PRESERVE

# CROSS SECTIONS

CUNARD RIVER ACCESS ROAD

114+60

| PROJECT | SHEET NUMBER |
|---|---|
| WV NP NERI 107(3) | T12 |

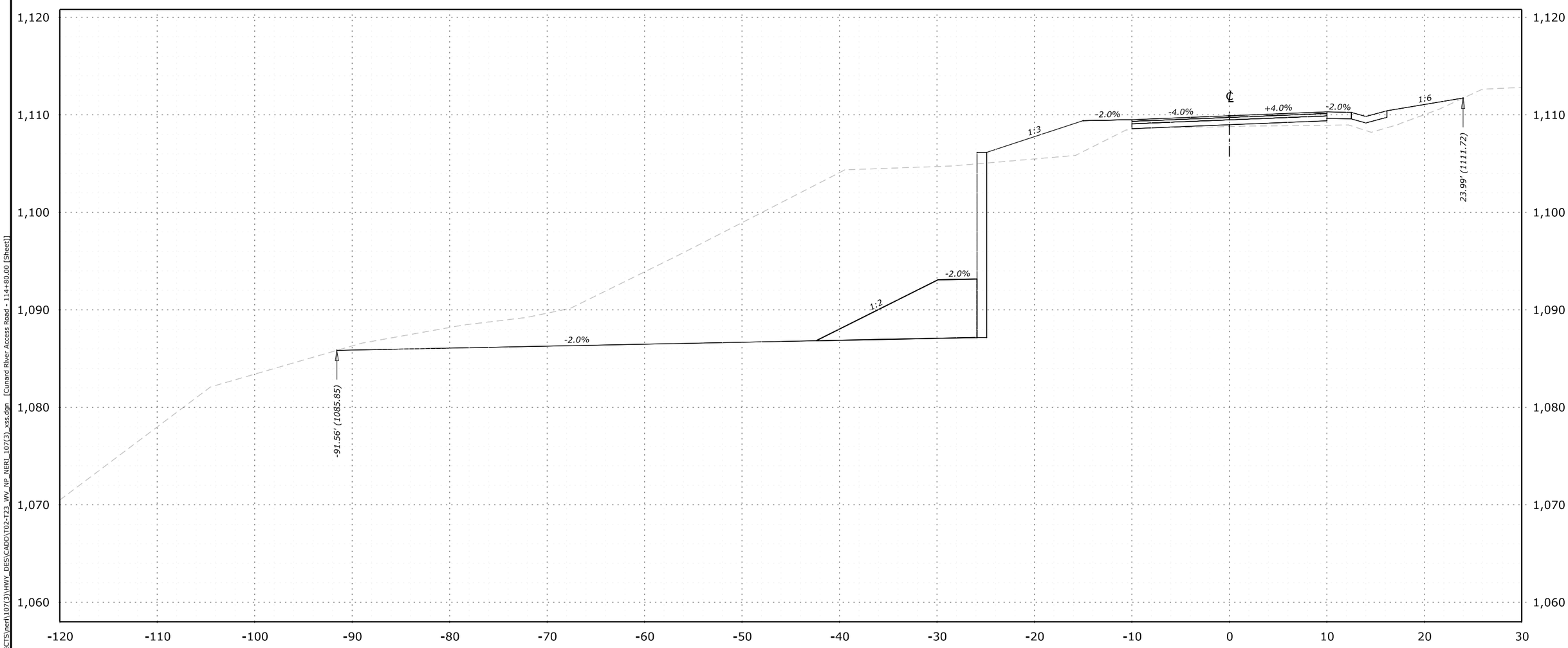


**114+80.00**
**Des Grade = 1,109.91**
**Subgrade = 1,108.99**
**Original Grnd = 1,108.80**

C:\PROJECTS\neri\107(3)\HWY_DES\CADD\T02-T23_WV_NP_NERI_107(3)_xss.dgn [Cunard River Access Road - 114+80.00 [Sheet]]

23 June 2025 4:08 PM

| NO. | DATE | BY | REVISIONS |
|---|---|---|---|
| | | | |
| | | | |
| | | | |
| | | | |

U.S. DEPARTMENT OF TRANSPORTATION
FEDERAL HIGHWAY ADMINISTRATION
OFFICE OF FEDERAL LANDS HIGHWAY

NEW RIVER GORGE NATIONAL PARK AND PRESERVE

# CROSS SECTIONS

CUNARD RIVER ACCESS ROAD

114+80

| PROJECT | SHEET NUMBER |
|---|---|
| WV NP NERI 107(3) | T13 |

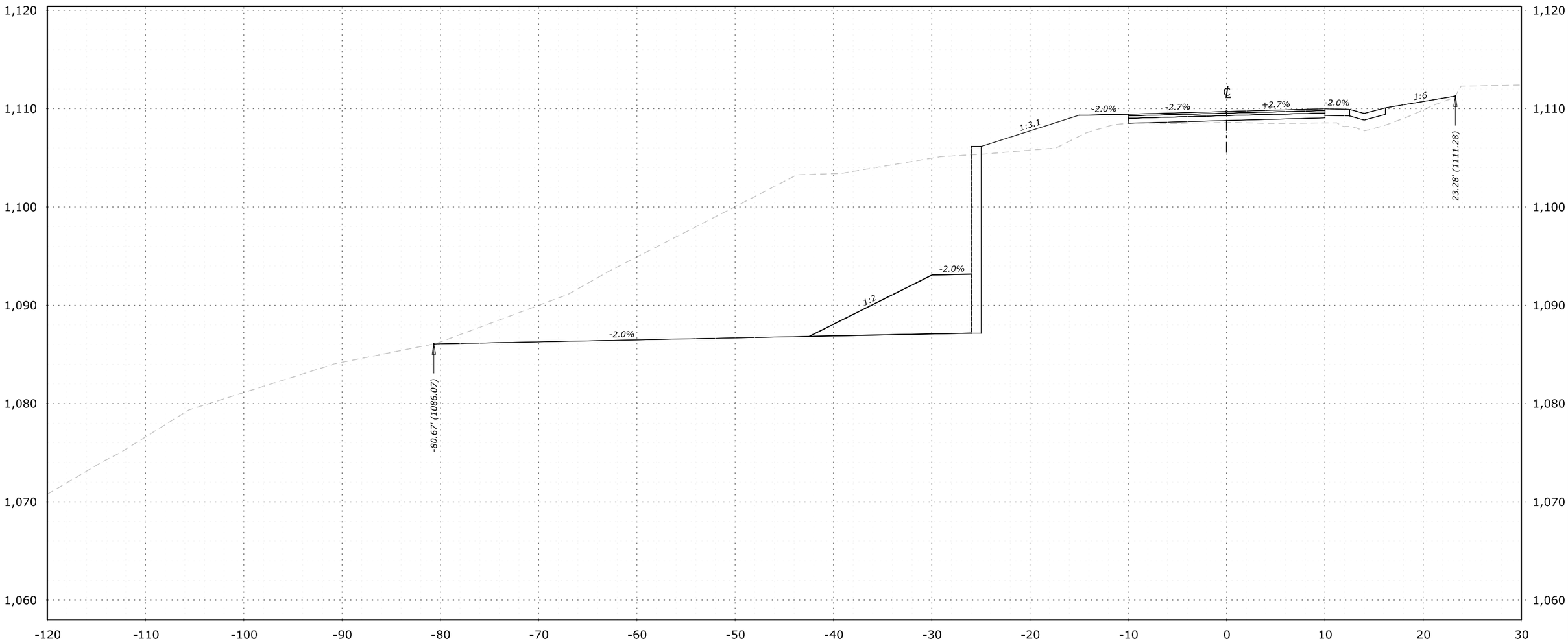


**115+00.00**
**Des Grade = 1,109.71**
**Subgrade = 1,108.79**
**Original Grnd = 1,108.61**

C:\PROJECTS\neri\107(3)\HWY_DES\CADD\T02-T23_WV_NP_NERI_107(3)_xss.dgn [Cunard River Access Road - 115+00.00 [Sheet]]

23 June 2025 4:09 PM

| NO. | DATE | BY | REVISIONS |
|---|---|---|---|
| | | | |
| | | | |
| | | | |
| | | | |

U.S. DEPARTMENT OF TRANSPORTATION
FEDERAL HIGHWAY ADMINISTRATION
OFFICE OF FEDERAL LANDS HIGHWAY

NEW RIVER GORGE NATIONAL PARK AND PRESERVE

# CROSS SECTIONS

CUNARD RIVER ACCESS ROAD

115+00

| PROJECT | SHEET NUMBER |
|---|---|
| WV NP NERI 107(3) | T14 |

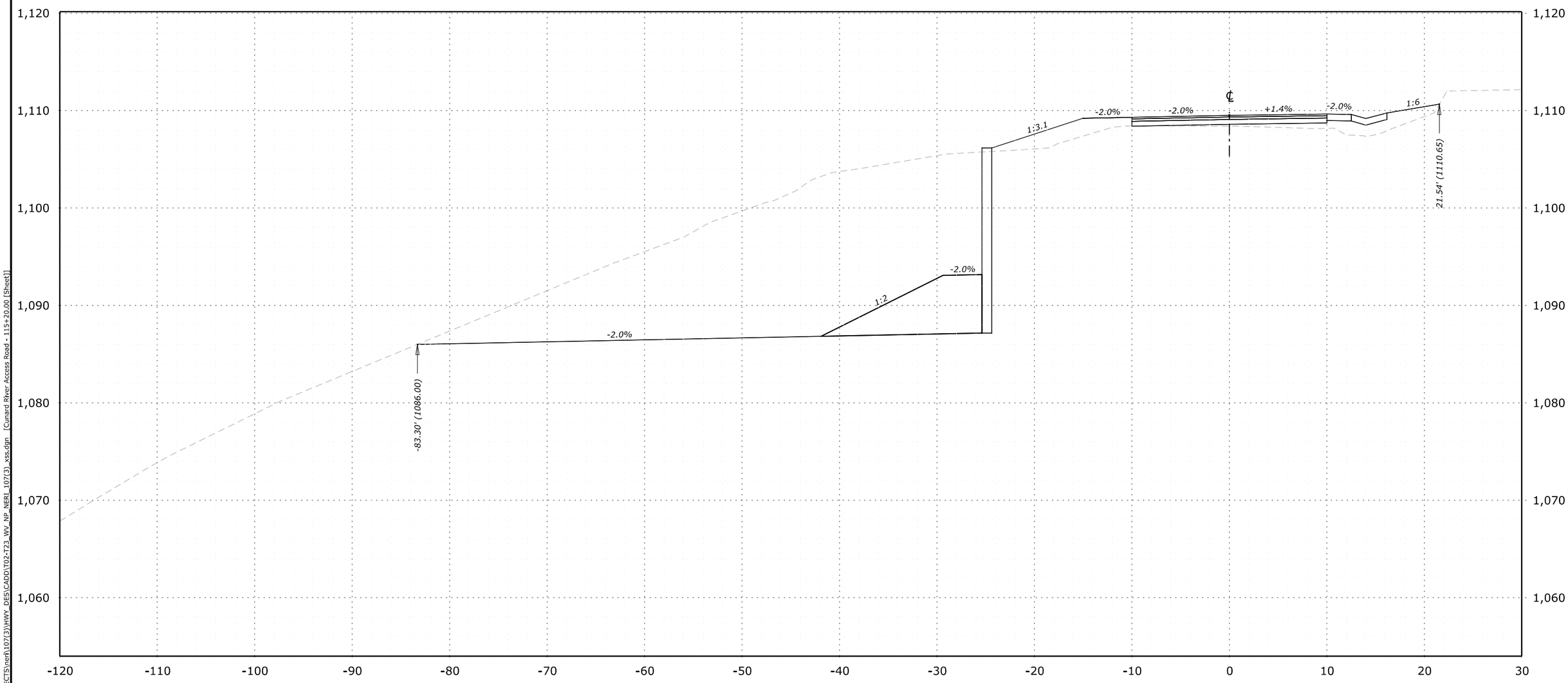


**115+20.00**
**Des Grade = 1,109.51**
**Subgrade = 1,108.59**
**Original Grnd = 1,108.42**

| NO. | DATE | BY | REVISIONS |
|---|---|---|---|
| | | | |
| | | | |
| | | | |
| | | | |

U.S. DEPARTMENT OF TRANSPORTATION
FEDERAL HIGHWAY ADMINISTRATION
OFFICE OF FEDERAL LANDS HIGHWAY

NEW RIVER GORGE NATIONAL PARK AND PRESERVE

# CROSS SECTIONS

CUNARD RIVER ACCESS ROAD

115+20

C:\PROJECTS\neri\107(3)\HWY_DES\CADD\T02-T23_WV_NP_NERI_107(3)_xss.dgn [Cunard River Access Road - 115+20.00 [Sheet]]
23 June 2025 4:10 PM

| PROJECT | SHEET NUMBER |
|---|---|
| WV NP NERI 107(3) | T15 |

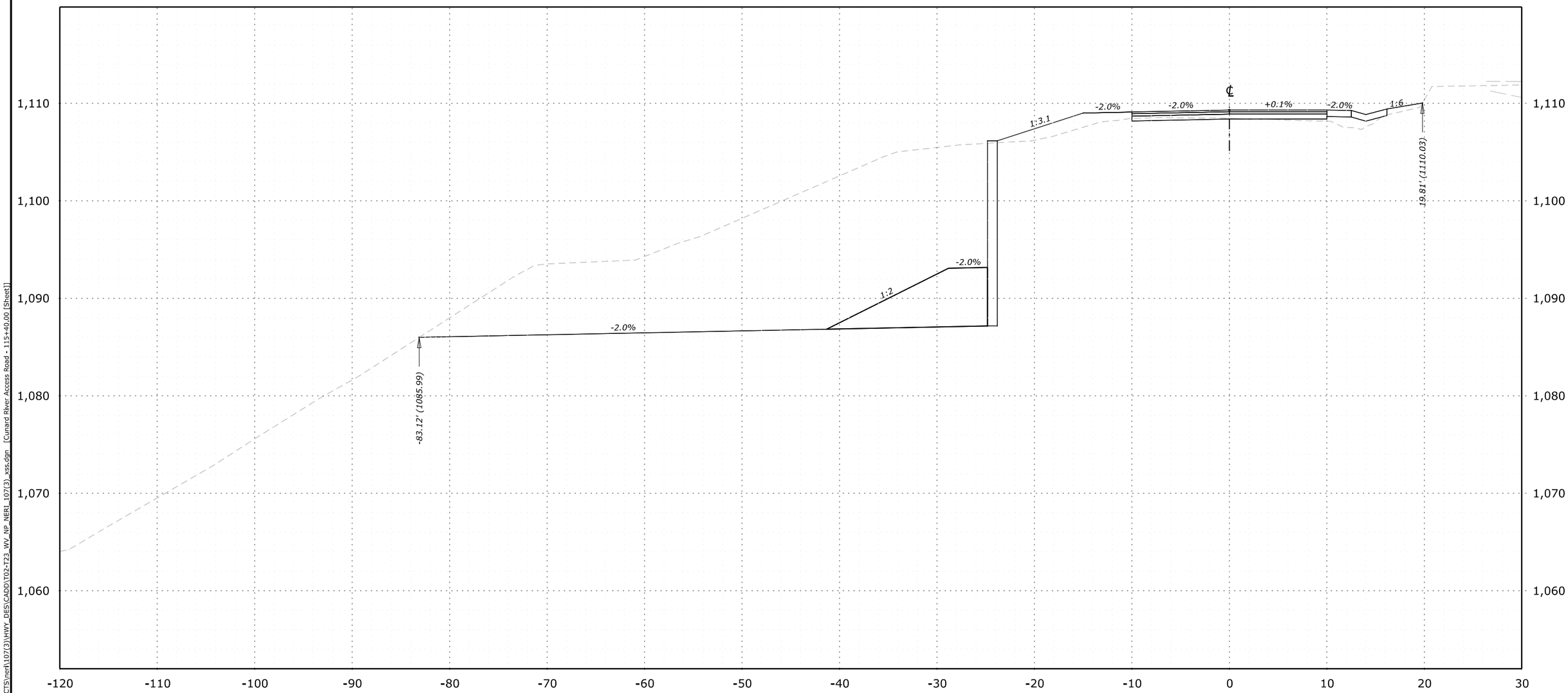


**115+40.00**
**Des Grade = 1,109.31**
**Subgrade = 1,108.39**
**Original Grnd = 1,108.48**

| NO. | DATE | BY | REVISIONS |
|---|---|---|---|
| | | | |
| | | | |
| | | | |
| | | | |

U.S. DEPARTMENT OF TRANSPORTATION
FEDERAL HIGHWAY ADMINISTRATION
OFFICE OF FEDERAL LANDS HIGHWAY

NEW RIVER GORGE NATIONAL PARK AND PRESERVE

# CROSS SECTIONS

CUNARD RIVER ACCESS ROAD

115+40

C:\PROJECTS\neri\107(3)\HWY_DES\CADD\T02-T23_WV_NP_NERI_107(3)_xss.dgn [Cunard River Access Road - 115+40.00 [Sheet]]
23 June 2025 4:10 PM

| PROJECT | SHEET NUMBER |
|---|---|
| WV NP NERI 107(3) | T16 |

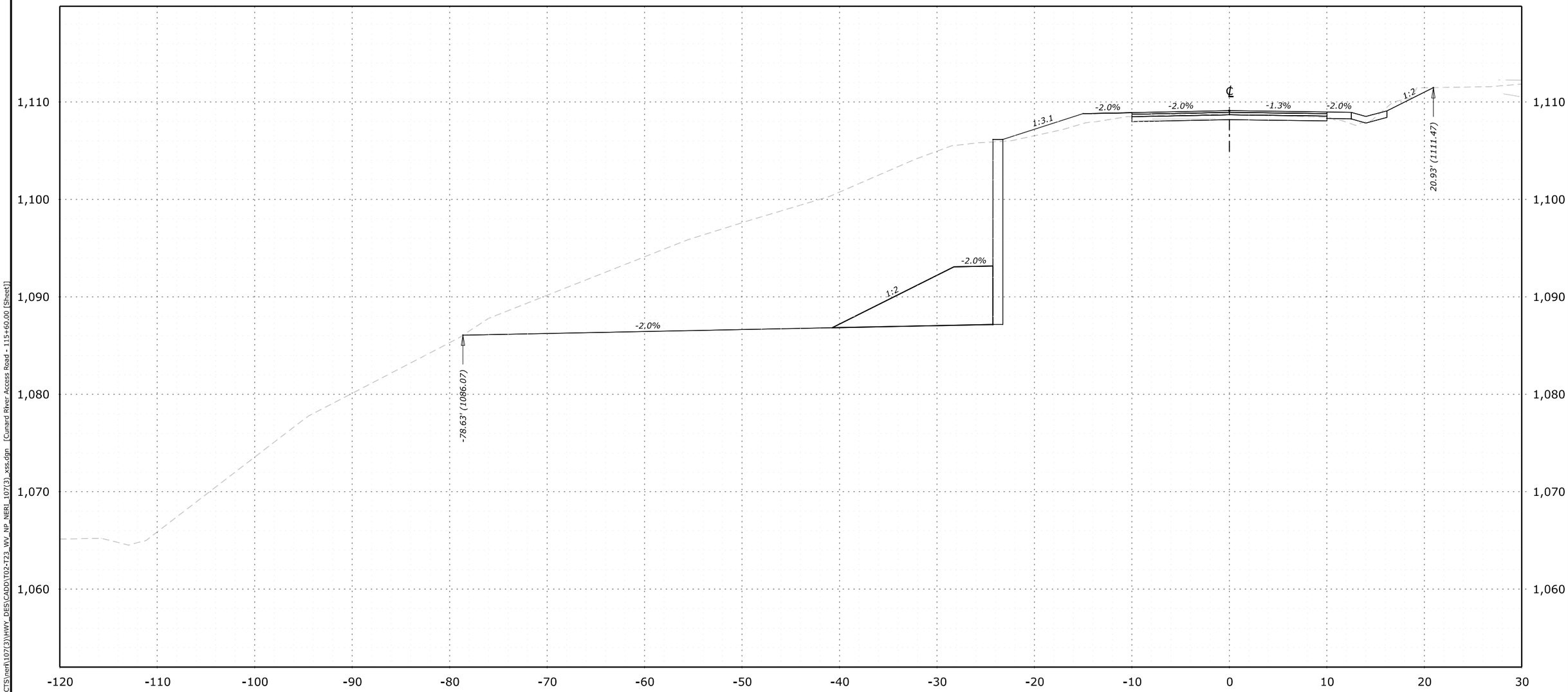


**115+60.00**
**Des Grade = 1,109.11**
**Subgrade = 1,108.19**
**Original Grnd = 1,108.72**

C:\PROJECTS\neri\107(3)\HWY_DES\CADD\T02-T23_WV_NP_NERI_107(3)_xss.dgn [Cunard River Access Road - 115+60.00 [Sheet]]

23 June 2025 4:00 PM

| NO. | DATE | BY | REVISIONS |
|---|---|---|---|
| | | | |
| | | | |
| | | | |
| | | | |

U.S. DEPARTMENT OF TRANSPORTATION
FEDERAL HIGHWAY ADMINISTRATION
OFFICE OF FEDERAL LANDS HIGHWAY

NEW RIVER GORGE NATIONAL PARK AND PRESERVE

# CROSS SECTIONS

CUNARD RIVER ACCESS ROAD

115+60

| PROJECT | SHEET NUMBER |
|---|---|
| WV NP NERI 107(3) | T17 |

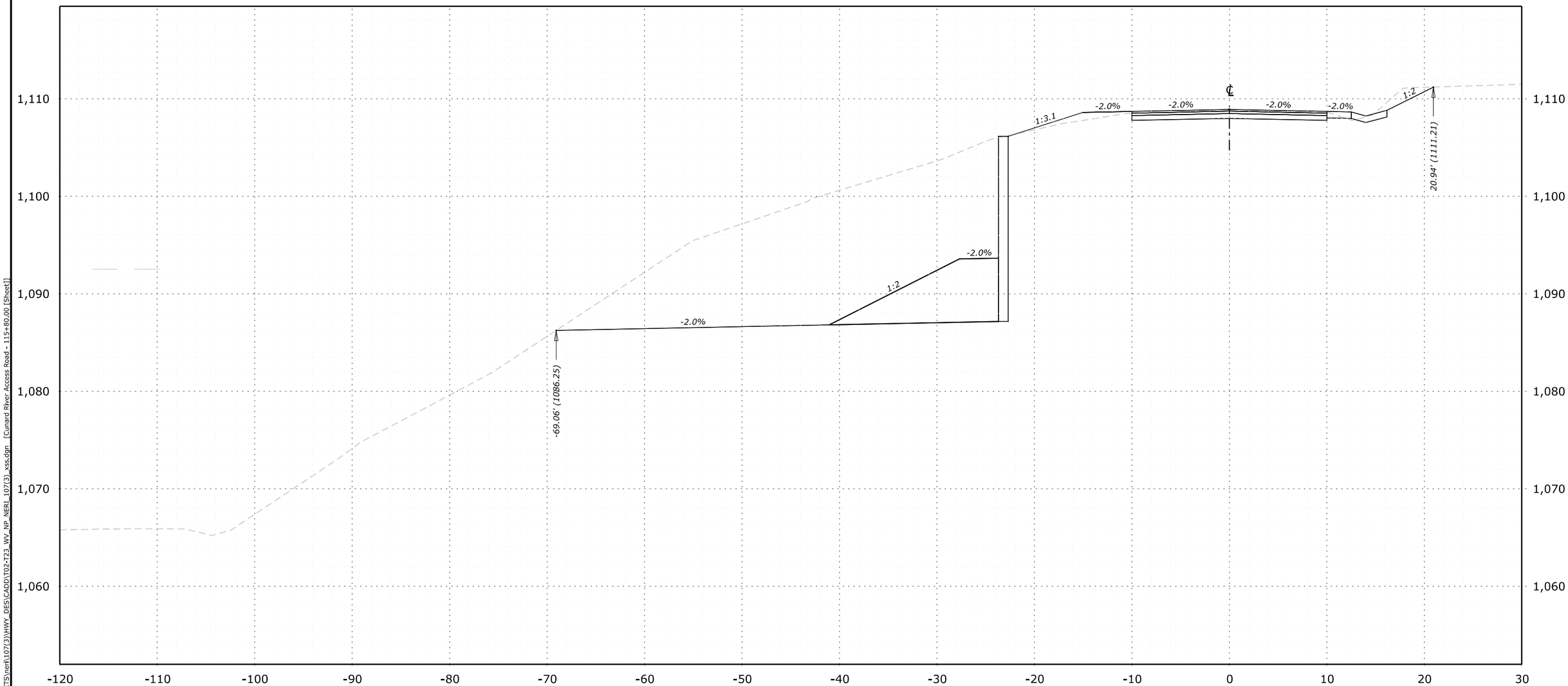


**115+80.00**
**Des Grade = 1,108.91**
**Subgrade = 1,107.99**
**Original Grnd = 1,108.85**

| NO. | DATE | BY | REVISIONS |
|---|---|---|---|
| | | | |
| | | | |
| | | | |
| | | | |

U.S. DEPARTMENT OF TRANSPORTATION
FEDERAL HIGHWAY ADMINISTRATION
OFFICE OF FEDERAL LANDS HIGHWAY

NEW RIVER GORGE NATIONAL PARK AND PRESERVE

# CROSS SECTIONS

CUNARD RIVER ACCESS ROAD

115+80

C:\PROJECTS\neri\107(3)\HWY_DES\CADD\T02-T23_WV_NP_NERI_107(3)_xss.dgn [Cunard River Access Road - 115+80.00 [Sheet]]
23 June 2025 4:11 PM

| PROJECT | SHEET NUMBER |
|---|---|
| WV NP NERI 107(3) | T18 |

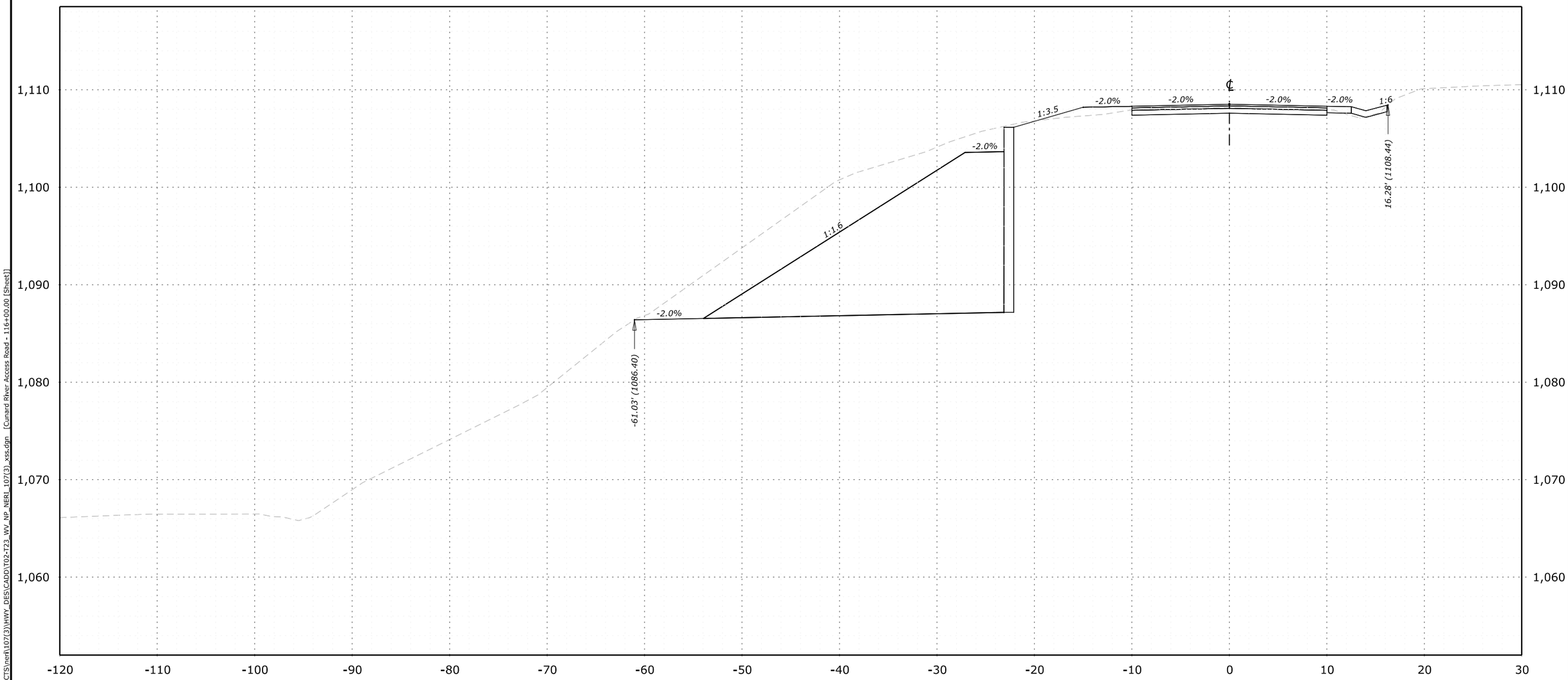


**116+00.00**
**Des Grade = 1,108.52**
**Subgrade = 1,107.60**
**Original Grnd = 1,108.16**

C:\PROJECTS\neri\107(3)\HWY_DES\CADD\T02-T23_WV_NP_NERI_107(3)_xss.dgn [Cunard River Access Road - 116+00.00 [Sheet]]

23 June 2025 4:11 PM

| NO. | DATE | BY | REVISIONS |
|---|---|---|---|
| | | | |
| | | | |
| | | | |
| | | | |

U.S. DEPARTMENT OF TRANSPORTATION
FEDERAL HIGHWAY ADMINISTRATION
OFFICE OF FEDERAL LANDS HIGHWAY

NEW RIVER GORGE NATIONAL PARK AND PRESERVE

# CROSS SECTIONS

CUNARD RIVER ACCESS ROAD

116+00

| PROJECT | SHEET NUMBER |
|---|---|
| WV NP NERI 107(3) | T19 |

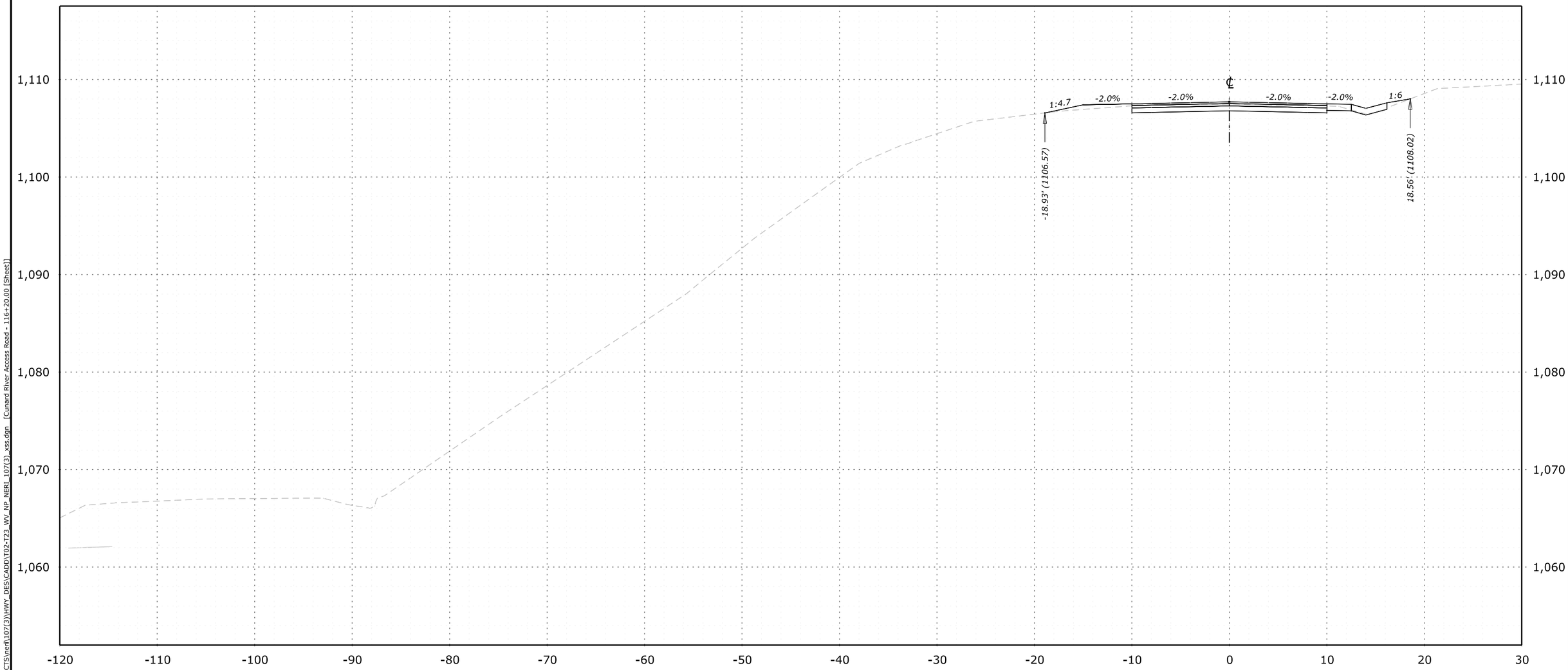


**116+20.00**
**Des Grade = 1,107.71**
**Subgrade = 1,106.79**
**Original Grnd = 1,107.46**

| NO. | DATE | BY | REVISIONS |
|---|---|---|---|
| | | | |
| | | | |
| | | | |
| | | | |

U.S. DEPARTMENT OF TRANSPORTATION
FEDERAL HIGHWAY ADMINISTRATION
OFFICE OF FEDERAL LANDS HIGHWAY

NEW RIVER GORGE NATIONAL PARK AND PRESERVE

# CROSS SECTIONS

CUNARD RIVER ACCESS ROAD

116+20

C:\PROJECTS\neri\107(3)\HWY_DES\CADD\T02-T23_WV_NP_NERI_107(3)_xss.dgn [Cunard River Access Road - 116+20.00 [Sheet]]
23 June 2025 4:12 PM

| PROJECT | SHEET NUMBER |
|---|---|
| WV NP NERI 107(3) | T20 |

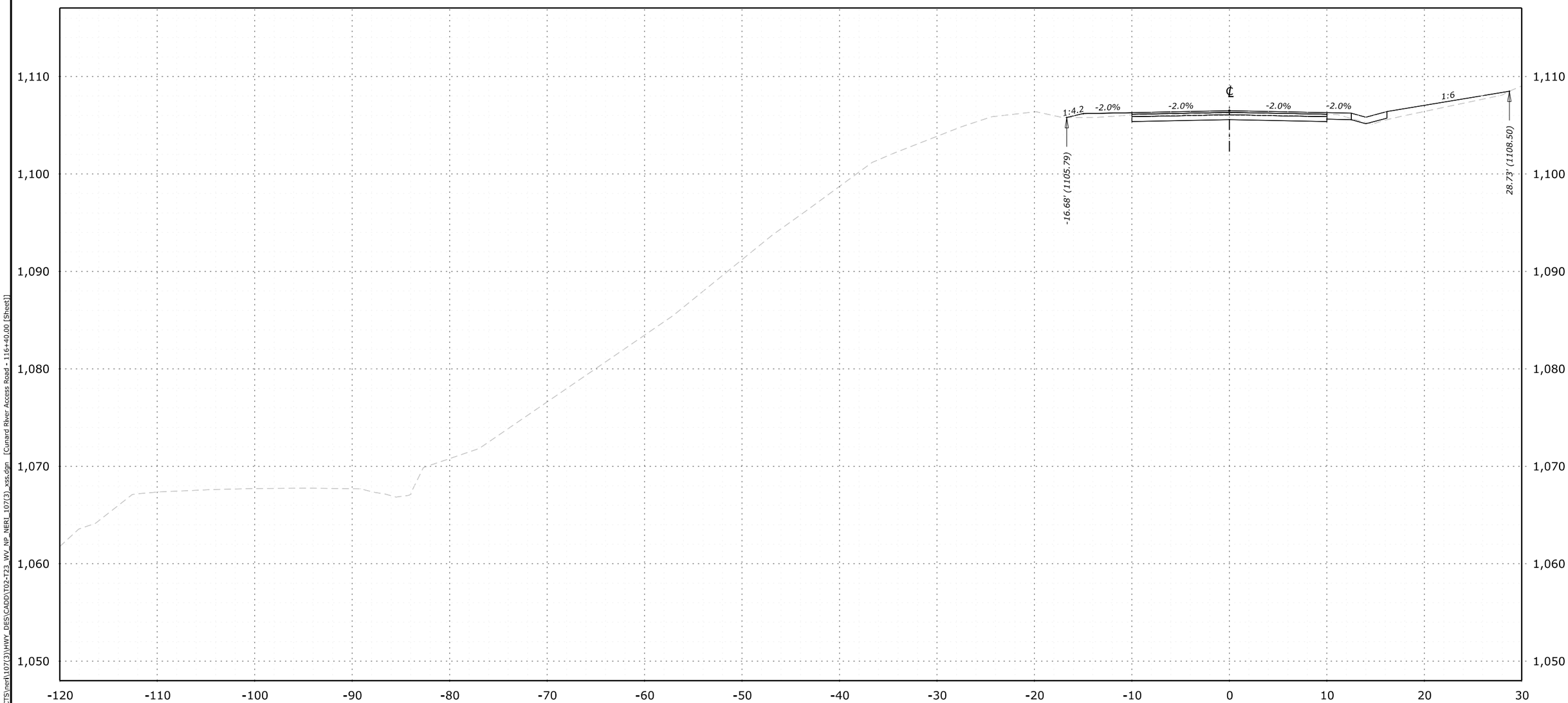


**116+40.00**
**Des Grade = 1,106.49**
**Subgrade = 1,105.57**
**Original Grnd = 1,106.23**

C:\PROJECTS\neri\107(3)\HWY_DES\CADD\T02-T23_WV_NP_NERI_107(3)_xss.dgn [Cunard River Access Road - 116+40.00 [Sheet]]

23 June 2025 4:13 PM

| NO. | DATE | BY | REVISIONS |
|---|---|---|---|
| | | | |
| | | | |
| | | | |
| | | | |

U.S. DEPARTMENT OF TRANSPORTATION
FEDERAL HIGHWAY ADMINISTRATION
OFFICE OF FEDERAL LANDS HIGHWAY

NEW RIVER GORGE NATIONAL PARK AND PRESERVE

# CROSS SECTIONS

CUNARD RIVER ACCESS ROAD

116+40

| PROJECT | SHEET NUMBER |
|---|---|
| WV NP NERI 107(3) | T21 |

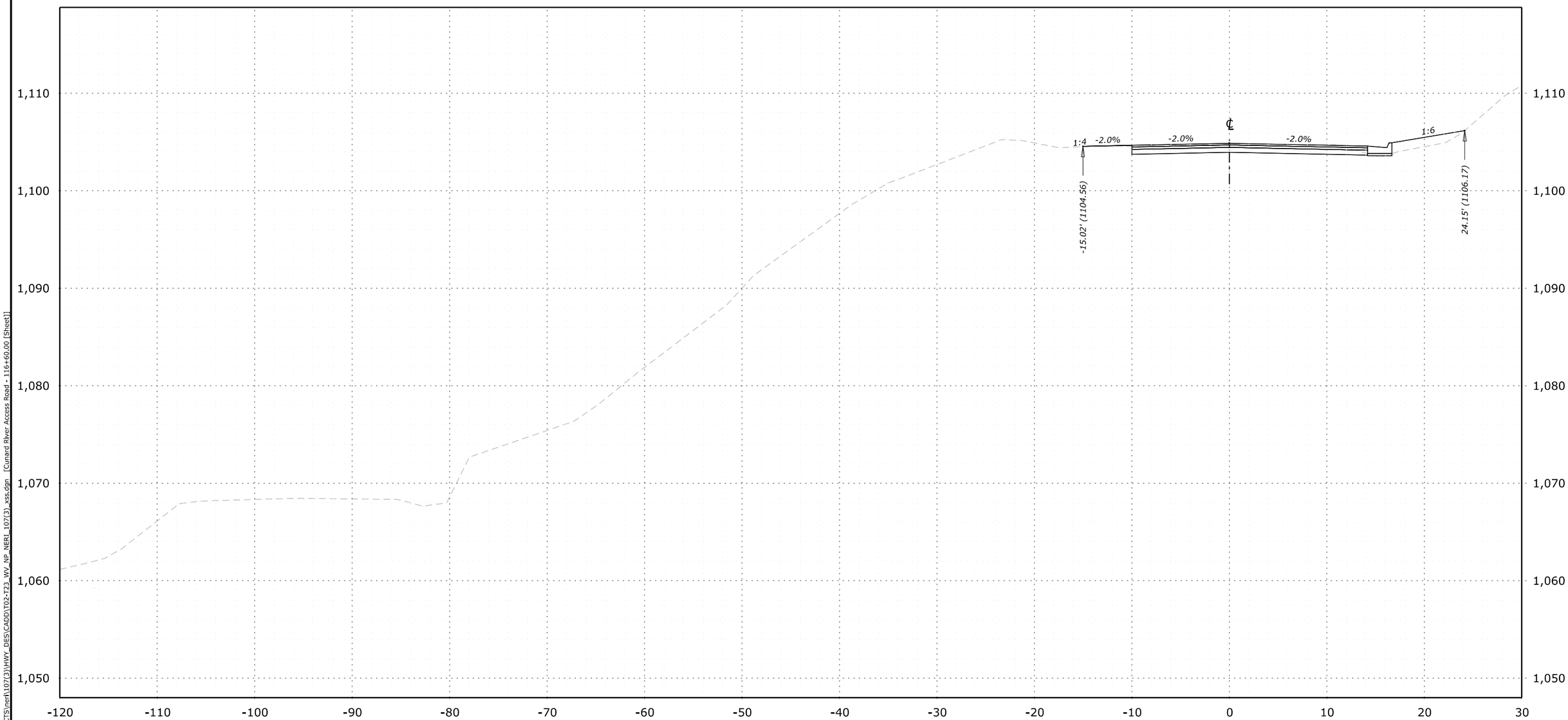


**116+60.00**
**Des Grade = 1,104.86**
**Subgrade = 1,103.94**
**Original Grnd = 1,104.78**

| NO. | DATE | BY | REVISIONS |
|---|---|---|---|
| | | | |
| | | | |
| | | | |
| | | | |

U.S. DEPARTMENT OF TRANSPORTATION
FEDERAL HIGHWAY ADMINISTRATION
OFFICE OF FEDERAL LANDS HIGHWAY

NEW RIVER GORGE NATIONAL PARK AND PRESERVE

# CROSS SECTIONS

CUNARD RIVER ACCESS ROAD

116+60

C:\PROJECTS\neri\107(3)\HWY_DES\CADD\T02-T23_WV_NP_NERI_107(3)_xss.dgn [Cunard River Access Road - 116+60.00 [Sheet]]
23 June 2025 4:14 PM

| PROJECT | SHEET NUMBER |
|---|---|
| WV NP NERI 107(3) | T22 |

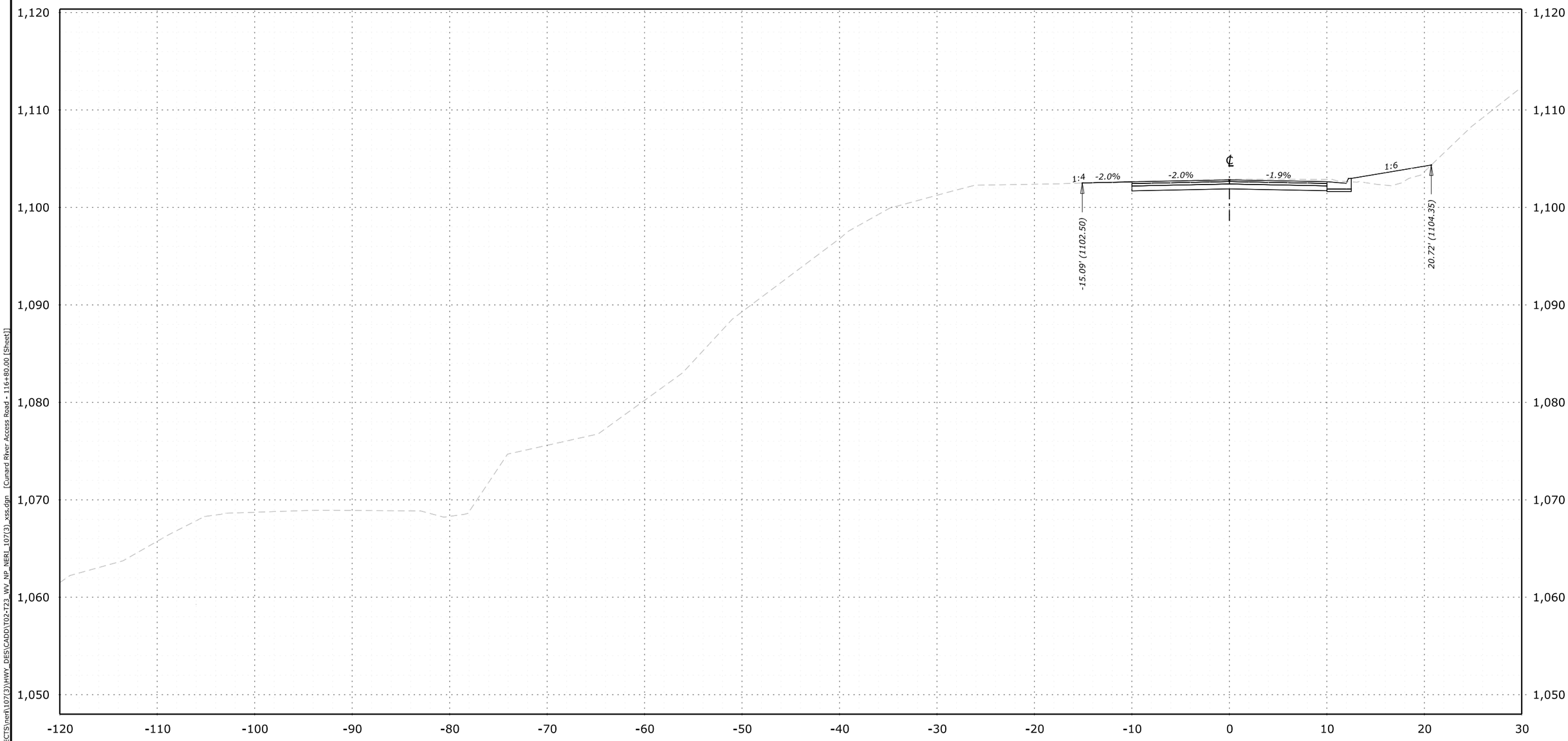


**116+80.00**
**Des Grade = 1,102.82**
**Subgrade = 1,101.90**
**Original Grnd = 1,102.89**

| NO. | DATE | BY | REVISIONS |
|---|---|---|---|
| | | | |
| | | | |
| | | | |
| | | | |

U.S. DEPARTMENT OF TRANSPORTATION
FEDERAL HIGHWAY ADMINISTRATION
OFFICE OF FEDERAL LANDS HIGHWAY

NEW RIVER GORGE NATIONAL PARK AND PRESERVE

# CROSS SECTIONS

CUNARD RIVER ACCESS ROAD

116+80

C:\PROJECTS\neri\107(3)\HWY_DES\CADD\T02-T23_WV_NP_NERI_107(3)_xss.dgn [Cunard River Access Road - 116+80.00 [Sheet]]
23 June 2025 4:19 PM

| PROJECT | SHEET NUMBER |
|---|---|
| WV NP NERI 107(3) | T23 |

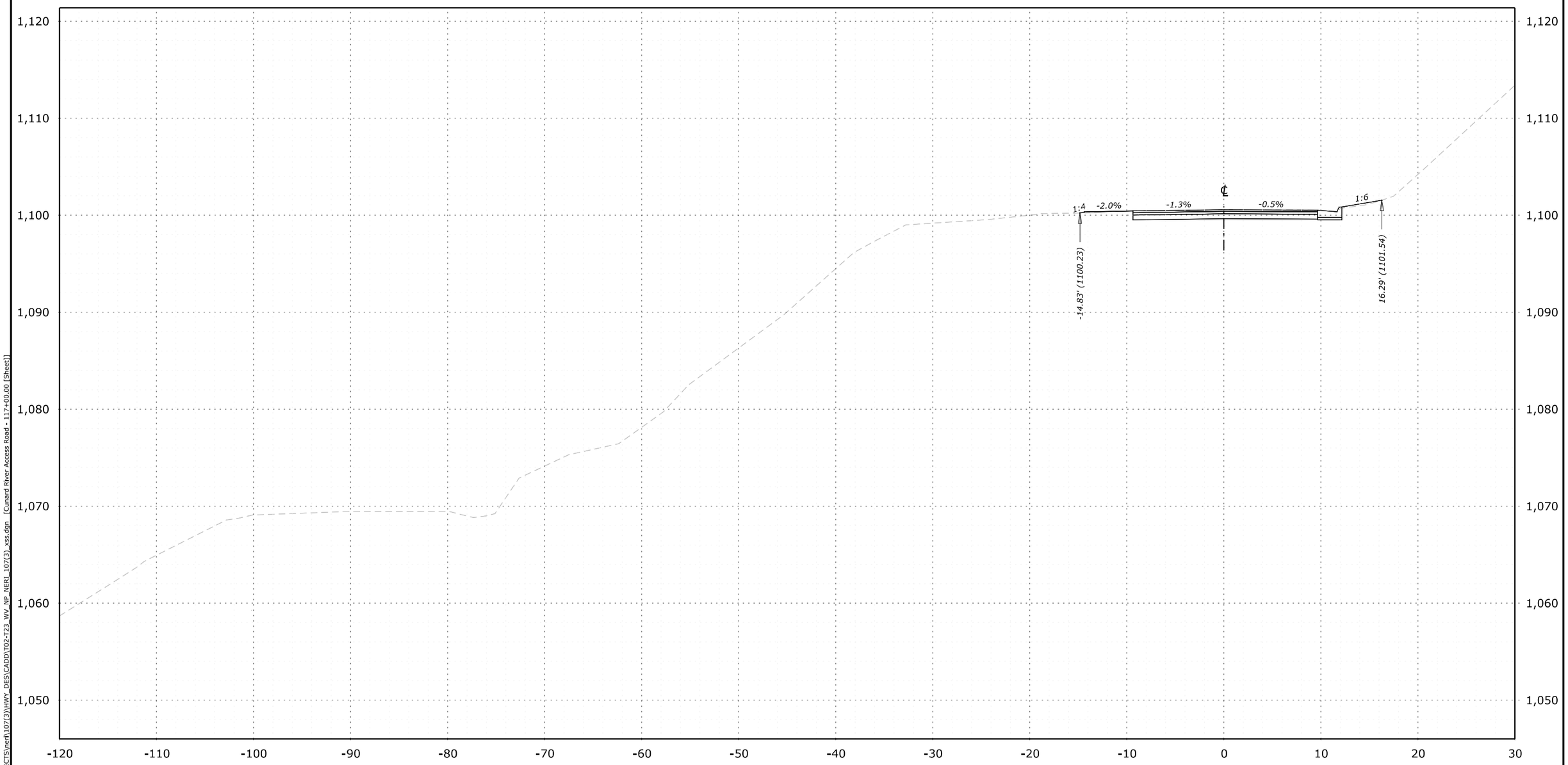


**117+00.00**
**Des Grade = 1,100.57**
**Subgrade = 1,099.65**
**Original Grnd = 1,100.57**

C:\PROJECTS\neri\107(3)\HWY_DES\CADD\T02-T23_WV_NP_NERI_107(3)_xss.dgn [Cunard River Access Road - 117+00.00 [Sheet]]

23 June 2025 4:03 PM

| NO. | DATE | BY | REVISIONS |
|---|---|---|---|
| | | | |
| | | | |
| | | | |
| | | | |

U.S. DEPARTMENT OF TRANSPORTATION
FEDERAL HIGHWAY ADMINISTRATION
OFFICE OF FEDERAL LANDS HIGHWAY

NEW RIVER GORGE NATIONAL PARK AND PRESERVE

# CROSS SECTIONS

CUNARD RIVER ACCESS ROAD

117+00