Form FHWA-201 (Rev. 11-87)	U.S. DEPARTMENT OF TRANSPORTATION FEDERAL HIGHWAY ADMINISTRATION **MINUTE - MEMO**	Use this form in lieu of transmittal slips within Dept. of Trans. when message comment is to be retained as file material. Do not prepare carbons. Not to be used in lieu of Form FHWA-121 for informal correspondence.

SUBJECT: WV NP NERI 107(3) Storm Drain System Memo

TO	MESSAGE/COMMENT	FROM/DATE
Yanina Kirtley Project Manager *Shoukat Nawaz* Highway Design Manager	We have completed the preliminary storm drain system analysis for Cunard River Access Road (NPS Route 107), Stations 112+00-117+00, along the proposed soldier pile retaining wall. The project is located in Fayette West Virginia, within the New River Gorge National Park and Preserve. The proposed storm drain system is designed to meet the Project Development and Design Manual (PDDM) criteria and guidance: 1. The design flow was analyzed for a 10-year design event. 2. Minimum pipe size and slope shall be such as will provide for a minimum velocity of 3 feet per second at the design flow rate to prevent deposition of sediment. Storm sewer slopes that produce velocities in excess of 10 feet per second when flowing full should be avoided. When full flow creates higher velocities the use of drop structures should be considered. 3. The limit of spread for a low standard road should be limited to half of one travel lane for gutter flow, both on grade and in roadway sags. The limit of spread for this road is 5 feet into the road. Including the width of the gutter, the total allowable spread is 6.5 feet. 4. The minimum size for storm drainpipe is 18”. However, short laterals less than 100ft in length a 12-in size may be used if required by limited cover space. 5. The minimum recommended capture efficiency for on-grade inlets is 70%. 6. Inlets located in a sag or sump point, should be designed for a 50% clogging factor. 7. Where a grate inlet is used at the low point of a sag vertical curve it is desirable to install a grate with twice the opening of the design requirement because of the vortices and the tendency to collect trash at these low points. 8. Minimum cover between the top of the pipe and the bottom of the pavement structure should be equal or greater than 3ft. Under no case should the cover of the pipe be less than 1 ft. 9. In storm drain sections where the hydraulic gradeline for the design flood must exceed the pipe soffit (i.e., the pipe flows under pressure), the hydraulic gradeline for the design flood will remain below the ground elevation at all inlets and access structures, and watertight gaskets should be specified for the pipe joints. 10. Water should not be carried across intersections and should not be allowed to overflow at driveway openings where the latter are on a descending grade from the gutter.	*Samantha Jurek* Hydraulic Engineer SAMANTHA CAROL JUREK Digitally signed by SAMANTHA CAROL JUREK Date: 2025.05.01 11:51:32 -04'00' THROUGH *Wendy Hiciano* Hydraulics Team Leader WENDY MERCEDES HICIANO Digitally signed by WENDY MERCEDES HICIANO Date: 2025.05.01 11:58:30 -04'00' 3/25/25

FHWA: S.Jurek:3549:JS: \\fhfl15fileserve.flhd.fhwa.dot.gov\data\PROJECTS\neri\107(3)\Techserv\Hydra\Reports\Storm Drain System Memo\ WV NP NERI 107(3) Storm Drain System Memo - NEW.docx cc: PM, Hydraulics, Geotech, Env, HD Eng, TS Engineer

Existing Conditions

Cunard Road has two failures sites within the project limits. There are four existing culverts near the site of the proposed soldier pile retaining wall: one 18”x44.4’ CMP at STA 112+20 that will remain undisturbed, two 18” CMP culverts that are within the proposed wall location at STA 113+90 and STA 115+30, respectively, and one 18”x42’ CMP after the proposed wall location at STA 116+85. The pipes are silted, and the outfalls are washed out. There is an existing V-shaped parallel ditch, 3ft wide.

Recommendations

A storm drain system consisting of two pipes and a gutter is proposed instead of a series of cross pipes due to the proposed soldier pile wall. The locations of the pipes through the wall would require much more complicated design and long term maintenance. Additionally, due to the sharply increasing slope of the existing terrain at the proposed pipe locations, storm drains with drop inlets will prevent an increased limit of disturbance for the project.

Hydrology (peak flow rates) was performed via Bentley Open Flow StormCAD software (ORD) using the Rational Method. The IDF curves were obtained from the NOAA Precipitation Frequency Data Server and imported into ORD. The drainage areas were delineated using georeferenced USGS quad maps within the software. Each drainage area contains a Catch Basin (CB) inlet. Table 1 shows the hydrology summary, and Table 5 shows the CB hydraulics summary.

Table 1: Drainage Area Hydrology Summary

		Hydrology Summary					
Label	Catch Basin	Station of CB (ft)	Area (ac)	Time of Concentration (hours)	Runoff Coefficient (C)	Catchment Intensity	Q10 (cfs)
DR-01	CB-01	113+03	0.766	0.26	0.207	3.874	0.62
DR-02	CB-02	116+55	9.623	0.28	0.213	3.770	7.78

Hydraulic design was performed via Bentley Open Flow StormCAD software (ORD) (2022 Release 3) using the HEC-22 (Urban Drainage Design Manual) headloss method, third edition. Each pipe should have inlet 4D and a free end section (FES). The plan view for the system is shown in Attachment 2 and the profiles for the pipes are shown in Attachments 3 and 4. Table 2 shows the storm drain pipe summary, Table 3 shows the pipe summary, and Table 4 shows the summary of the inlet and outfalls.

Table 2: Pipe and Gutter Hydraulics Summary

	Link Summary						
Label	Station (ft)	Q10 Flow (cfs)	Velocity (ft/s)	HGL In (ft)	HGL Out (ft)	Depth In (ft)	Depth Out (ft)
Pipe-01	113+03	0.43	4.09	1,110.42	1,109.65	0.22	0.15
Pipe-02	116+55	5.22	9.61	1,102.41	1,101.04	0.81	0.50
Gutter-01	113+03 – 116+55	0.19	(N/A)	(N/A)	(N/A)	0.21	0.17

Table 3: Storm Drain Pipe Summary

		Pipe Summary					
Label	Station	Diameter (in)	Length (ft)	Slope	Invert Start	Invert Stop	Material
	(ft)			(%)	(ft)	(ft)	
Pipe-01	113+03	24	38	2%	1,110.20	1,109.50	HDPE
Pipe-02	116+55	24	44	2%	1,101.60	1,100.54	HDPE

Table 4: Inlet and Outlet Summary

Node Summary							
Label	Q10 Flow (Total In) (cfs)	Q10 Flow (Total Out) (cfs)	Elevation (Ground) (ft)	Elevation (RIM) (ft)	Elevation (Invert) (ft)	EGL In (ft)	EGL Out (ft)
CB-01	0.43	0.43	1,113.79	1,113.79	1,110.54	1,110.54	1,110.52
FES-01	(N/A)	0.43	1,111.76	(N/A)	1109.5	1,109.65	1,109.65
CB-02	5.22	5.22	1,104.80	1,104.80	1,101.60	1,102.83	1,102.77
FES-02	(N/A)	2.64	1,102.80	(N/A)	1100.54	1,101.04	1,101.04

Table 5: Catch Basin Hydraulics

	Catch Basin Inlet Summary				
Label	Station (ft)	Flow (Captured) (cfs)	Flow (Total Bypassed) (cfs)	Depth (Gutter) (in)	Spread / Top Width (ft)
CB-01	113+03	0.43	0.19	0.407	3.078
CB-02	116+55	5.22	2.74	2.014	3.882

The recommended inlet type is Type 4D. A modified Type 4D inlet is also recommended for CB-02. All inlets will be Type 4D, as shown in Attachment 5. The inlet summary is shown in table 6.

Table 6: Inlet Summary

Inlet Summary				
Label	Type of inlet	Depth, H (ft)	On-grade vs Sag	% Clogging
CB-01	4D	2.92	On-grade	N/A
CB-02	Modified 4D	3.20	On-grade	N/A

We also recommend riprap at each outfall. The scour countermeasures were checked using the Riprap Analysis Hydraulic Toolbox V5.2, which is based on HEC-14 (Hydraulic Design of Energy Dissipators for Culverts and Channels, Third Edition). The standard riprap detail (E251-01) will provide sufficient outlet protection for both pipes. Table 7 shows a summary of the riprap aprons.

Table 7: Scour Countermeasures – Riprap Summary

Riprap Summary						
Label	Culvert Size (in)	Riprap Class	D50 (in)	Apron Length (ft)	Width at End of Apron (ft)	Apron Depth (ft)
Pipe-01	24	2	9	8	6.5	1.5
Pipe-02	24	2	9	8	6.5	1.5

To assist Highway Design determining the appropriate lining for the parallel ditch, HYD conducted a stability analysis using the Channel Analysis Hydraulic Toolbox (V5.2), based on HEC-15 (Design of Roadside Channels with Flexible Linings, Third Edition). Based on our analysis results, considering a slope of 6.6% and a maximum Q10 of 13.8cfs, we recommend an asphalt paved ditch as seen in EFLHD Detail E608-A. The larger ditch geometry will accommodate the spread of the flow. Please see attachment 8 for calculation details.

Please let us know should you have any questions.

Attachments:

- Attachment 1 – Storm Drain System Plan View
- Attachment 2 – Pipe-01 – Station 113+03 Profile View
- Attachment 3 – Pipe-02 – Station 116+55 Profile View
- Attachment 4 – Inlet 4D
- Attachment 5 – Paved Asphalt Waterway
- Attachment 6 – Calculation Detailed Summary
- Attachment 7 – Gutter Hydraulics

FHWA: S.Jurek:3549:JS:
\\fhfl15fileserve.flhd.fhwa.dot.gov\data\PROJECTS\neri\107(3)\Techserv\Hydra\Reports\Storm Drain System Memo\
WV NP NERI 107(3) Storm Drain System Memo - NEW.docx cc: PM, Hydraulics, Geotech, Env, HD Eng, TS Engineer

WV NP NERI 107(3) HYD Memo
Attachment 1
Storm Drain System Plan View

Pipe-01
STA 113+03
24" x 38' Circular HDPE
Inlet 4D (Detail E604-02)
Free End Section
Riprap Apron at Outfall
(Detail E251-01)

Pipe-02
STA 116+55
24" x 44' Circular HDPE
Modified Inlet 4D
(Detail E604-02A)
Free End Section
Riprap Apron at Outfall
(Detail E251-01)

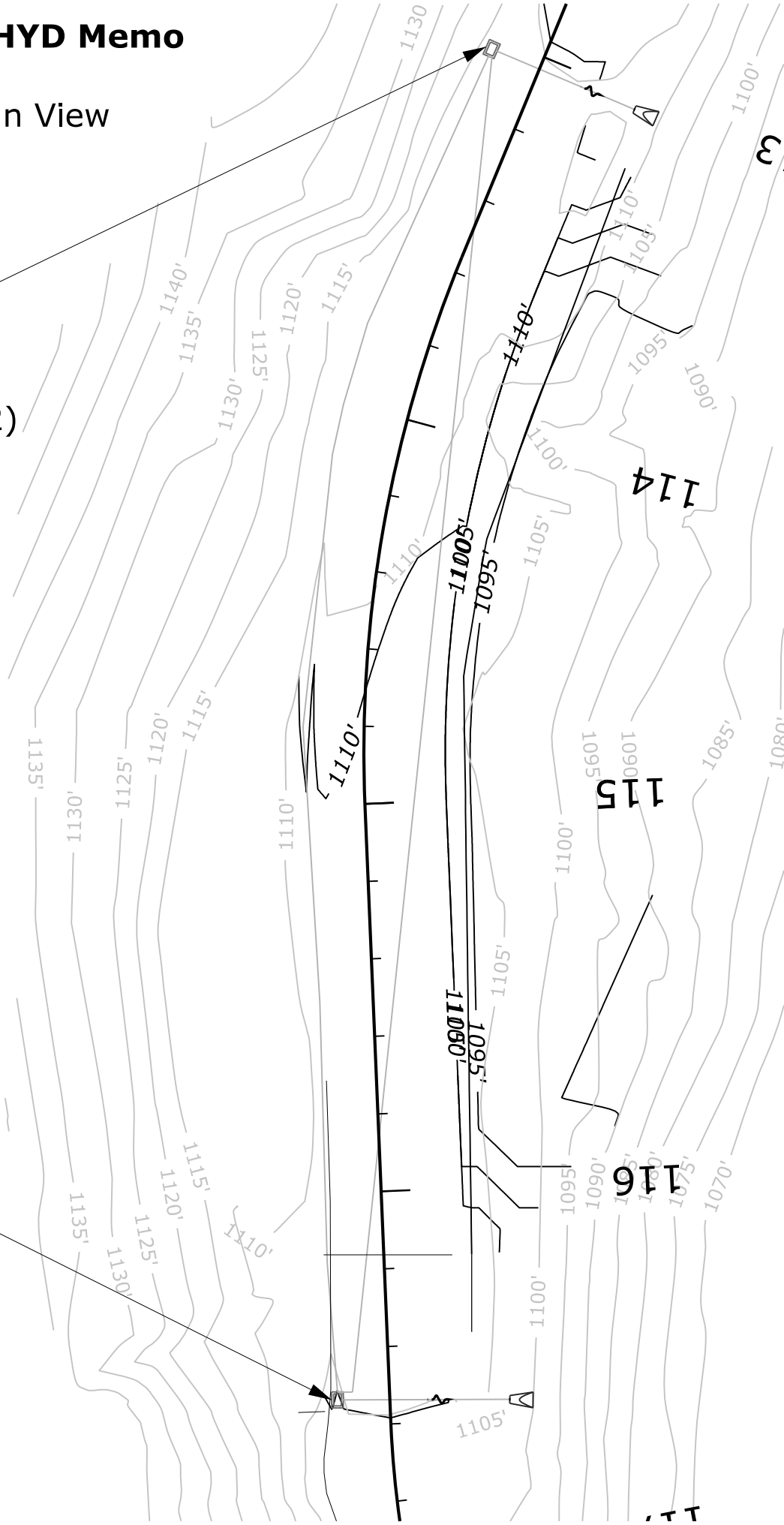

Attachment 2: Pipe-01
Profile View
STA 113+03

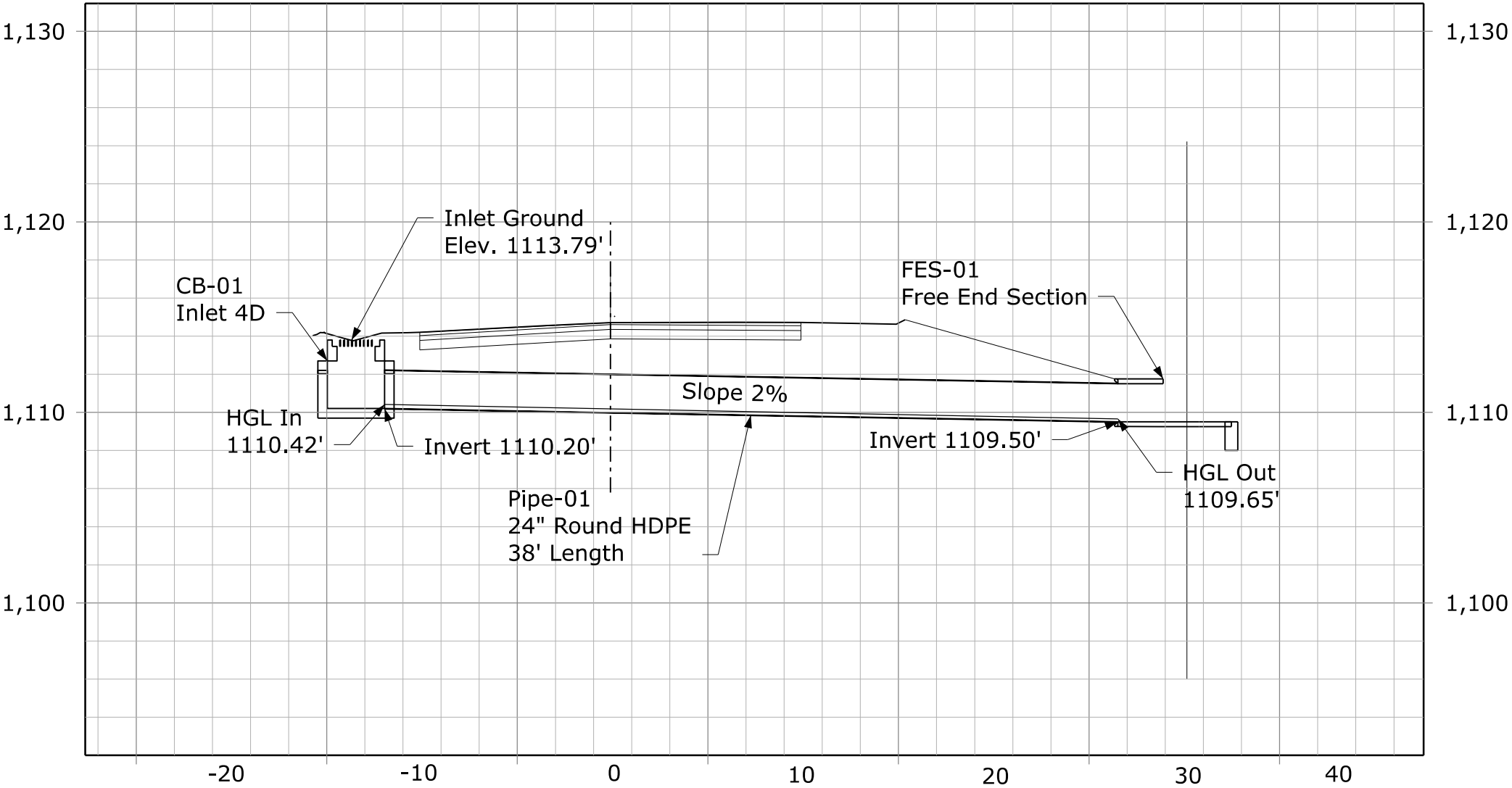

Attachment 3: Pipe-02
Profile View
STA 116+55

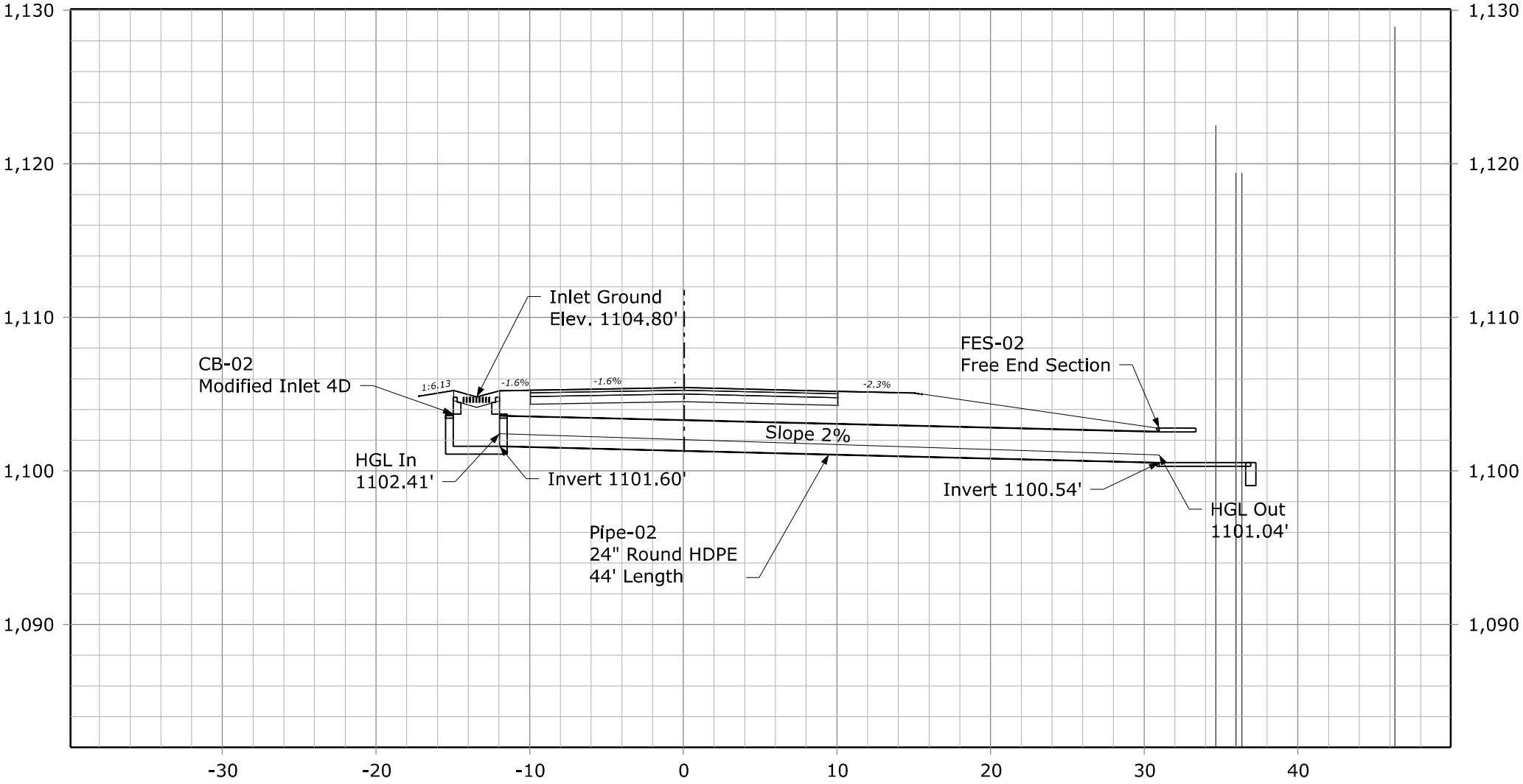

PROJECT	SHEET NUMBER
WV NP NERI 107(2)	S11

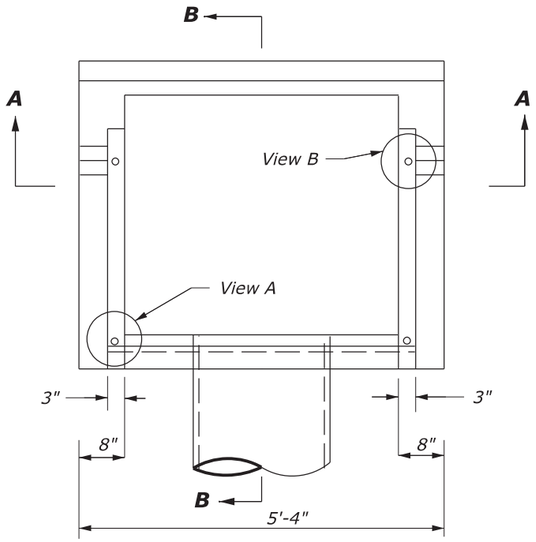

PLAN VIEW

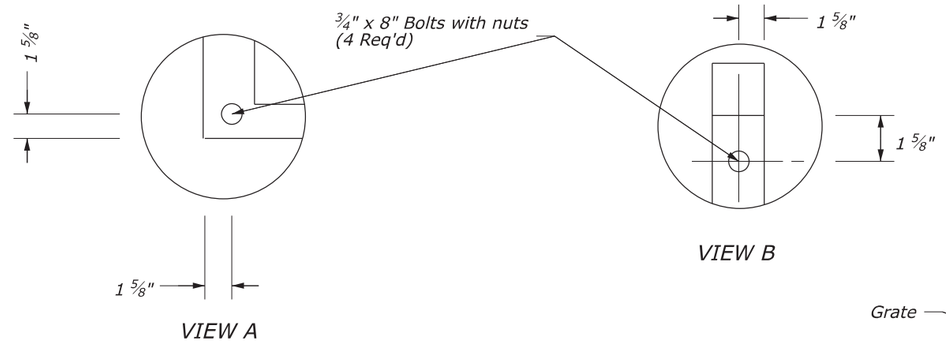

VIEW A

VIEW B

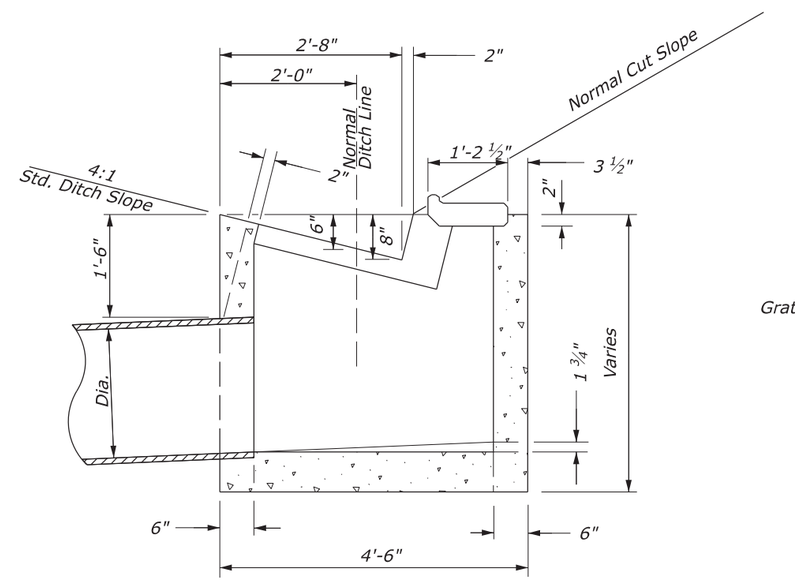

SECTION A-A

SECTION B-B

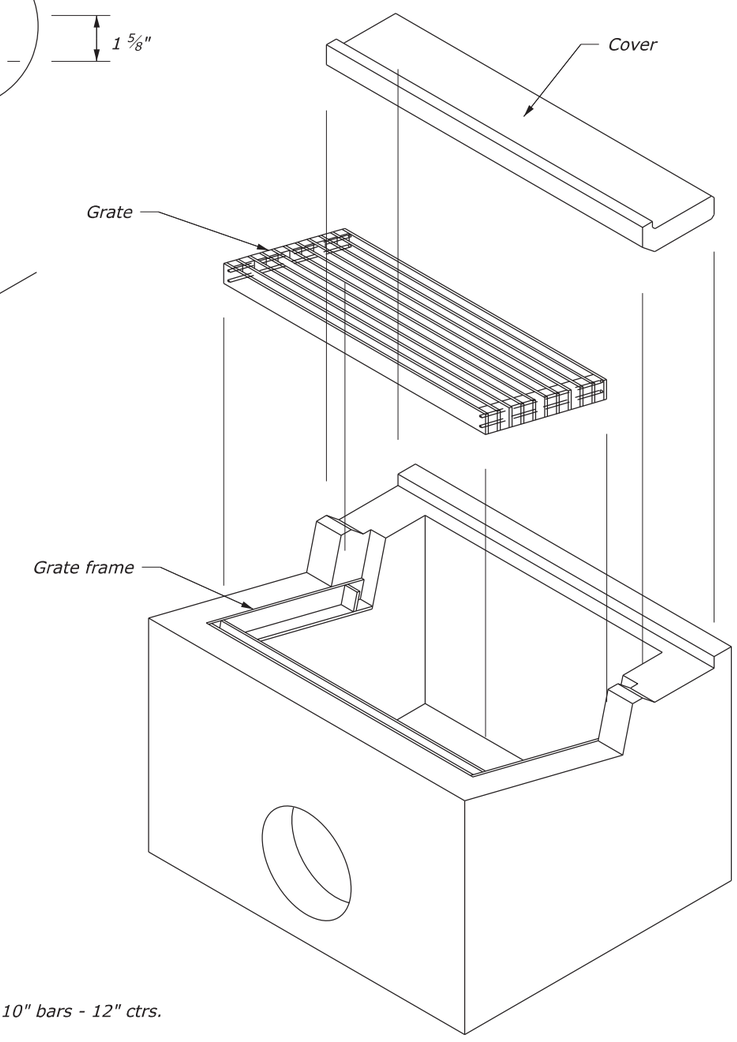

ISOMETRIC VIEW

NOTES:

1. Furnish #5 reinforcing bars, placed 1½ inches minimum from face of concrete.
2. In floors, place bars on 6-inch centers each way. In walls, place horizontal bars on 6-inch centers and vertical bars on 12-inch centers.
3. Ensure all square corners on precast cover have 1½-inch by 45° chamfer.
4. Bolt grate frame to inlet; alternate fastening methods will be allowed with the approval of the CO.
5. See Sheet 2 of 2 (Detail E604-02) for metal frame and grate.
6. Inlet shown in cut location. In fill locations, use similar inlet except pipe outlet is on opposite side.

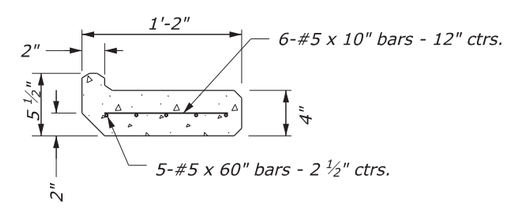

PRECAST COVER

Length = 5'-4"

NO SCALE

U.S. DEPARTMENT OF TRANSPORTATION
FEDERAL HIGHWAY ADMINISTRATION
OFFICE OF FEDERAL LANDS HIGHWAY

EFLHD DETAIL

INLET, TYPE 4D
Sheet 1 of 2

DETAIL APPROVED FOR USE
APPROVED: MAY 2011
REVISED: SEPTEMBER 2020

DETAIL
E604-02

C:\PROJECTS\nerf\107(2)\HWY_DES\CADD\Std-Det\S11-S12_st60402_detail.dgn [Sheet-1]
17 October 2023 10:09 AM

PROJECT	SHEET NUMBER
WV NP NERI 107(2)	S12

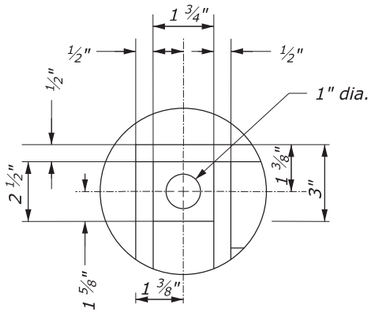

VIEW B

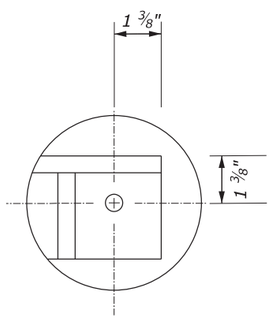

VIEW D

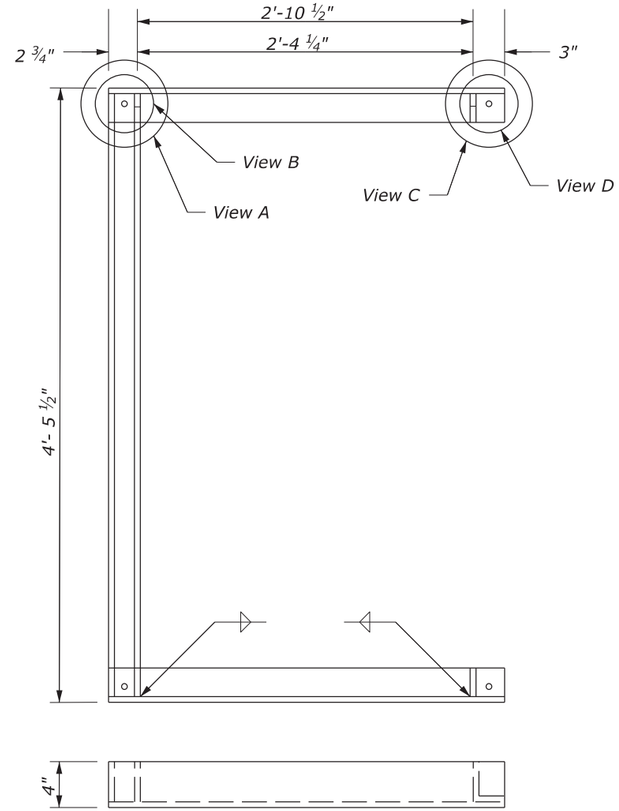

GRATE FRAME

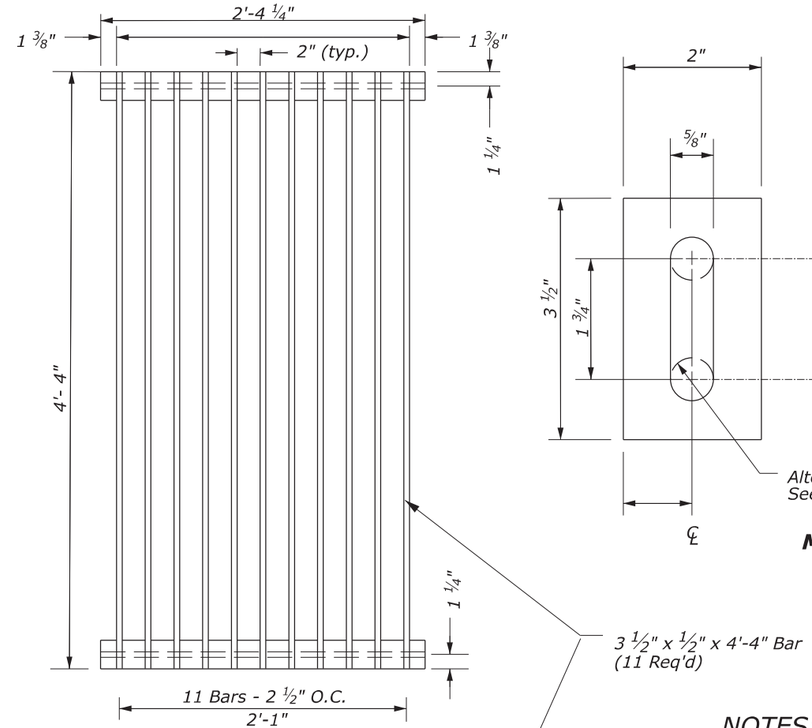

GRATE

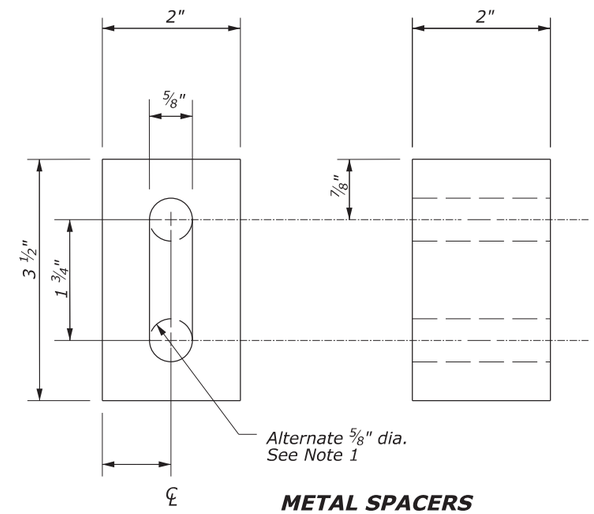

METAL SPACERS

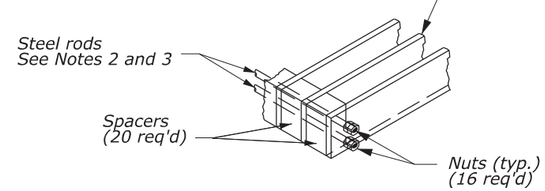

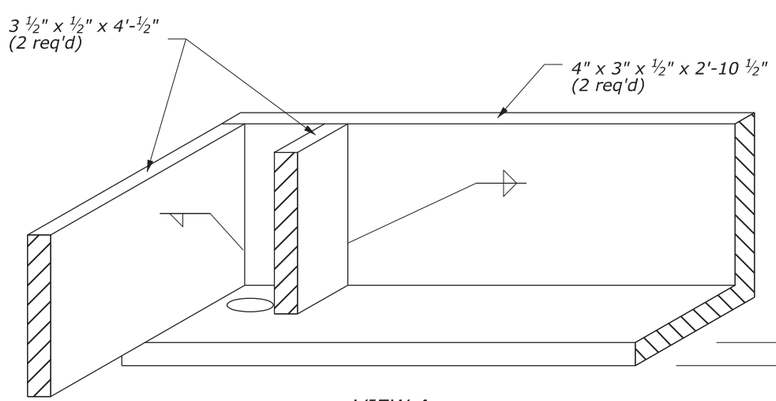

VIEW A
(OBLIQUE)

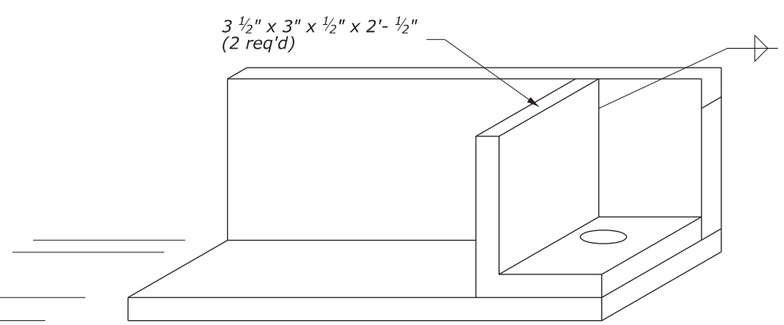

VIEW C
(OBLIQUE)

NOTES:

1. Alternatively furnish spacers with ⅝-inch diameter holes or two pieces of ½-inch galvanized iron pipe instead of slot shown.
2. Use four ½-inch diameter by 28¼-inch length steel rods with two nuts on each end. Thread rods 2 inches ± on each end.
3. Instead of rods and nuts, use bars welded together using spacers with two extra 1¾-inch outside spacers added to each end.
4. Provide metal parts for the frame and grate that are hot dipped galvanized after fabrication. Furnish steel frame and grate.

LEGEND

Weld both sides

Fillet lap weld

NO SCALE

U.S. DEPARTMENT OF TRANSPORTATION
FEDERAL HIGHWAY ADMINISTRATION
OFFICE OF FEDERAL LANDS HIGHWAY

EFLHD DETAIL

INLET, TYPE 4D
Sheet 2 of 2

DETAIL APPROVED FOR USE
APPROVED: MAY 2011
REVISED: SEPTEMBER 2020

DETAIL
E604-02

17 October 2023 10:09 AM C:\PROJECTS\neri\107(2)\HWY_DES\CADD\Std-Det\S11-S12_st60402_detail.dgn [Sheet-2]

NPS NO.	REG	STATE	PROJECT	SHEET NO.
637 / 41,082	NE	WV	PLH-NERI 6(2)	L20

NOTES:

1. The approximate shape of the paved waterway is an arc with a radius of 2.9 feet.
2. At inlets and other special locations, widen and shape paved waterway to drain.

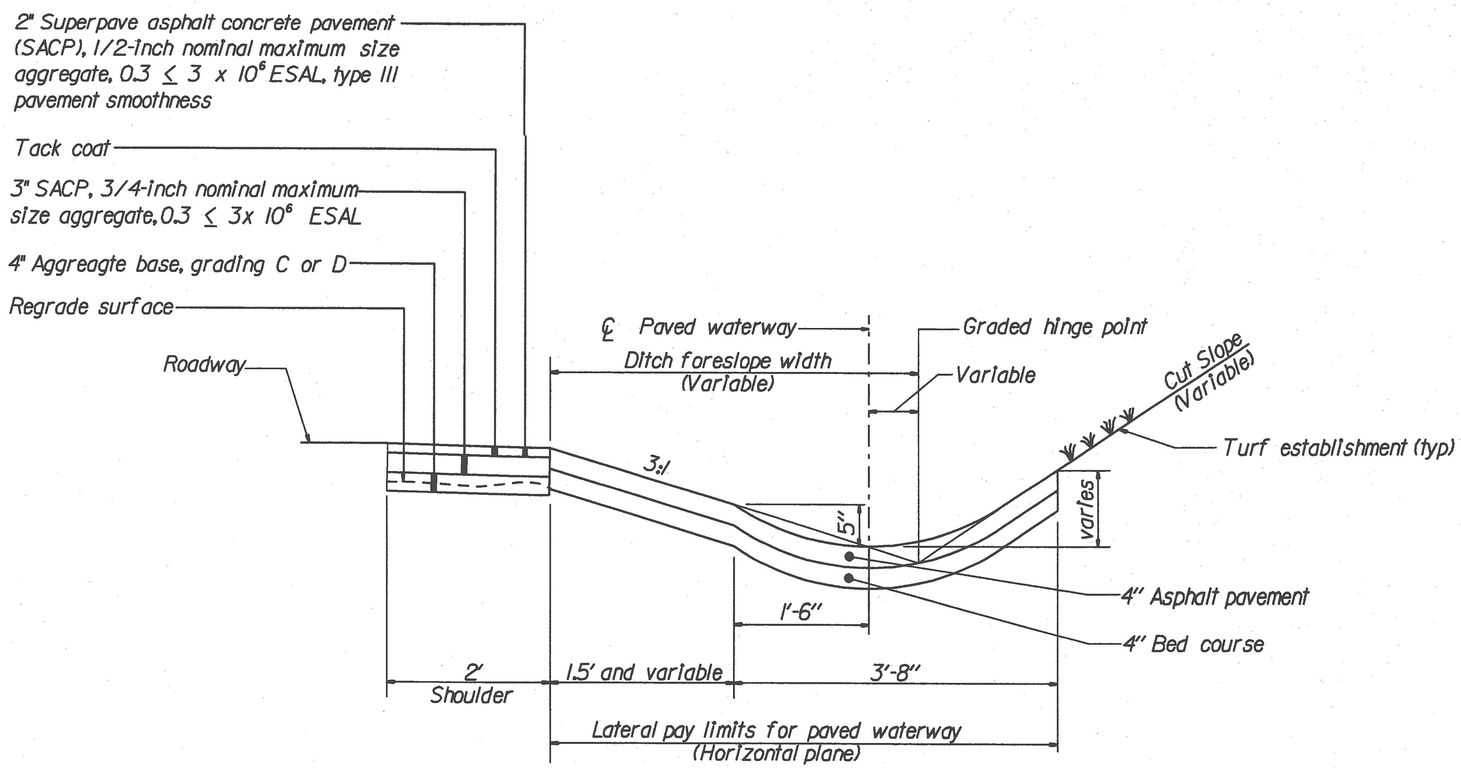

PAVED WATERWAY

NOT TO SCALE

U.S. DEPARTMENT OF TRANSPORTATION
FEDERAL HIGHWAY ADMINISTRATION
EASTERN FEDERAL LANDS HIGHWAY DIVISION

DETAIL

ASPHALT PAVED WATERWAY

DETAIL APPROVED FOR USE --/----

REVISED:

DETAIL E608-A

Calculation Detailed Summary

Element Details			
ID	110	Notes	
Label	Base Analysis		

Hydraulic Summary			
Flow Profile Method	Backwater Analysis	Average Velocity Method	Actual Uniform Flow Velocity
Number of Flow Profile Steps	5	Minimum Structure Headloss	0.00 ft
Hydraulic Grade Convergence Test	0.00 ft	Minimum Time of Concentration	0.083 hours

Inlets			
Neglect Side Flow?	False	Active Components for Combination Inlets In Sag	Grate and Curb
Neglect Gutter Cross Slope For Side Flow?	False	Active Components for Combination Inlets on Grade	Grate and Curb

HEC-22 Energy Losses (Second Edition)			
Elevations Considered Equal Within	0.50 ft	Depressed Unsubmerged Factor	1.000
Consider Non-Piped Plunging Flow?	True	Half Bench Submerged Factor	0.950
Flat Submerged Factor	1.000	Half Bench Unsubmerged Factor	0.150
Flat Unsubmerged Factor	1.000	Full Bench Submerged Factor	0.750
Depressed Submerged Factor	1.000	Full Bench Unsubmerged Factor	0.070

Headloss (AASHTO)			
Expansion, Ke	0.350	Shaping Adjustment, Cs	0.500
Contraction, Kc	0.250	Non-Piped Flow Adjustment, Cn	1.300

Bend Angle vs. Bend Loss Curve

Bend Angle (degrees)	Bend Loss Coefficient, Kb
0.00	0.000
15.00	0.190
30.00	0.350
45.00	0.470
60.00	0.560
75.00	0.640
90.00	0.700

Gravity Hydraulics	
Governing Upstream Pipe Selection Method	Pipe with Maximum QV

Calculation Detailed Summary

Catchment Summary

Label	Area (User Defined) (acres)	Time of Concentration (hours)	Runoff Coefficient (Rational)	Catchment CA (acres)
DR-01	0.766	0.260	0.207	0.158
DR-02	9.623	0.283	0.213	2.047

Catchment Intensity (in/h)	Catchment Rational Flow (cfs)
3.874	0.62
3.770	7.78

Conduit Summary

Label	Section Type	Branch ID	Subnetwork Outfall	Flow (cfs)
Pipe-01	Circle	2	FES-01	0.43
Pipe-02	Circle	1	FES-02	5.22

Velocity (ft/s)	Hydraulic Grade Line (In) (ft)	Hydraulic Grade Line (Out) (ft)	Depth (In) (ft)	Depth (Out) (ft)
4.09	1,110.42	1,109.65	0.22	0.15
9.61	1,102.41	1,101.04	0.81	0.50

Node Summary

Label	Element Type	Subnetwork Outfall	Flow (Total In) (cfs)	Flow (Total Out) (cfs)
CB-01	Catch Basin	FES-01	0.43	0.43
CB-02	Catch Basin	FES-02	5.22	5.22
FES-02	Headwall	(N/A)	(N/A)	5.21
FES-01	Headwall	(N/A)	(N/A)	0.43

Elevation (Ground) (ft)	Elevation (Invert) (ft)	Energy Grade Line (In) (ft)	Energy Grade Line (Out) (ft)
1,113.79	1,110.20	1,110.54	1,110.52
1,104.80	1,101.60	1,102.83	1,102.77
1,102.80	(N/A)	1,101.04	1,101.04
1,111.76	(N/A)	1,109.65	1,109.65

Inlet Summary

Label	Inlet Type	Catalog Inlet Type	Catalog Inlet	Flow (Captured) (cfs)
CB-01	Ditch	Ditch	Inlet Generic Ditch	0.43
CB-02	Ditch	Ditch	Inlet Generic Ditch	5.22

Flow (Total Bypassed) (cfs)	Bypass Target	Capture Efficiency (Calculated) (%)	Depth (Gutter) (in)	Spread / Top Width (ft)
0.19	CB-02	69.5	0.407	3.078
2.74	(N/A)	65.6	2.014	3.882

Pond Summary

Calculation Detailed Summary

Pond Summary

Label	Element Type	Subnetwork Outfall	Flow (Total In) (cfs)	Flow (Total Out) (cfs)	Hydraulic Grade (ft)	Volume (gal)

Hydraulic Analysis Report

Project Data

Project Title:

Designer:

Project Date: Wednesday, November 13, 2024

Project Units: U.S. Customary Units

Notes:

Channel Analysis: Channel Analysis

Notes:

Input Parameters

Channel Type: Triangular

Side Slope 1 (Z1): 3.6000 ft/ft

Side Slope 2 (Z2): 3.6000 ft/ft

Longitudinal Slope: 6.6000 ft/ft

Manning's n: 0.0081

Flow 13.8000 cfs

Result Parameters

Depth 0.1976 ft

Area of Flow 0.1406 ft^2

Wetted Perimeter 1.4768 ft

Hydraulic Radius 0.0952 ft

Average Velocity 98.1491 ft/s

Top Width 1.4229 ft

Froude Number: 55.0239

Critical Depth 0.9819 ft

Critical Velocity 3.9760 ft/s

Critical Slope: 0.0013 ft/ft

Critical Top Width 7.07 ft

Calculated Max Shear Stress 81.3905 lb/ft^2

Calculated Avg Shear Stress 39.2106 lb/ft^2

Channel Lining Analysis: Channel Lining Design Analysis

Notes:

Lining Input Parameters

Channel Lining Type: Riprap, Cobble, or Gravel

D50: 0.00 mm

Riprap Specific Weight: 165 lb/ft^3

Water Specific Weight: 62.4 lb/ft^3

Riprap Shape is Angular

Safety Factor: 1

Calculated Safety Factor: 1

Lining Results

Angle of Repose: 0 degrees

Relative Flow Depth: 9.7375e-312 ft

Manning's n method: Bathurst

Manning's n: 0

Channel Bottom Shear Results

V*: 0

Reynold's Number: 0

Shield's Parameter: 0

Shear stress on channel bottom: 0 lb/ft^2

Permissible shear stress for channel bottom: 0 lb/ft^2

Channel bottom is NOT stable

Stable D50: 0 mm

Channel Side Shear Results

K1: 0

K2: 0

Kb: 0

Shear stress on side of channel: 0 lb/ft^2

Permissible shear stress for side of channel: 0 lb/ft^2

Stable Side D50: 0 lb/ft^2

Side of channel is NOT stable

Channel Lining Stability Results 2

The channel is NOT stable

Channel Summary

Name of Selected Channel: Channel Analysis

Selected Profile: FHWA Profile (read-only)

Culvert Assessment Profiles

Culvert Assessment Profile Name: Standard (read-only)

Maximum Excavation Depth: 20.00 ft

Maximum Shallow Cover: 4.00 ft

Maximum Small Pipe Size: 36.00 ft

Minimum Manned Entry Size: 48.00 in

Riprap Classes

Riprap Class Name:CLASS I

Riprap Class Order:1

The following values are an 'average' of the size fraction range for the selected riprap class.

D100: 304.80 mm

D85: 228.60 mm

D50: 165.10 mm

D15: 114.30 mm

Riprap Class Name:CLASS II

Riprap Class Order:2

The following values are an 'average' of the size fraction range for the selected riprap class.

D100: 457.20 mm

D85: 330.20 mm

D50: 241.30 mm

D15: 177.80 mm

Riprap Class Name:CLASS III

Riprap Class Order:3

The following values are an 'average' of the size fraction range for the selected riprap class.

D100: 609.60 mm

D85: 431.80 mm

D50: 317.50 mm

D15: 228.60 mm

Riprap Class Name:CLASS IV

Riprap Class Order:4

The following values are an 'average' of the size fraction range for the selected riprap class.

D100: 762.00 mm

D85: 533.40 mm

D50: 393.70 mm

D15: 266.70 mm

Riprap Class Name:CLASS V

Riprap Class Order:5

The following values are an 'average' of the size fraction range for the selected riprap class.

D100: 914.40 mm

D85: 647.70 mm

D50: 469.90 mm

D15: 330.20 mm

Riprap Class Name:CLASS VI

Riprap Class Order:6

The following values are an 'average' of the size fraction range for the selected riprap class.

D100: 1066.80 mm

D85: 762.00 mm

D50: 546.10 mm

D15: 381.00 mm

Riprap Class Name:CLASS VII

Riprap Class Order:7

The following values are an 'average' of the size fraction range for the selected riprap class.

D100: 1257.30 mm

D85: 889.00 mm

D50: 647.70 mm

D15: 444.50 mm

Riprap Class Name:CLASS VIII

Riprap Class Order:8

The following values are an 'average' of the size fraction range for the selected riprap class.

D100: 1524.00 mm

D85: 1079.50 mm

D50: 800.10 mm

D15: 558.80 mm

Riprap Class Name:CLASS IX

Riprap Class Order:9

The following values are an 'average' of the size fraction range for the selected riprap class.

D100: 1828.80 mm

D85: 1295.40 mm

D50: 965.20 mm

D15: 660.40 mm

Riprap Class Name:CLASS X

Riprap Class Order:10

The following values are an 'average' of the size fraction range for the selected riprap class.

D100: 2133.60 mm

D85: 1511.30 mm

D50: 1130.30 mm

D15: 787.40 mm