USCGC MIDGETT (WMSL 757)

SPECIFICATION FOR DOCKSIDE REPAIRS

FQ2 FY2027

Developed By: John Webber

(Rev-0, 22 June 2026)

TABLE OF CONTENTS

Consolidated List of References iv
Consolidated List of Government-furnished Property xi
Consolidated List of Critical Inspection Items xiii
Principal Characteristics xiv
General Requirements 1
WORK ITEM 1: Fire Prevention, Provide 14
WORK ITEM 2: Tanks (Ballast), Clean and Inspect 17
WORK ITEM 3: Tanks (Aviation Fuel Service), Clean and Inspect 22
WORK ITEM 4: Tanks (Aviation Fuel Stowage and Overflow), Clean and Inspect 27
WORK ITEM 5: Tanks (Potable Water), Clean and Inspect 32
WORK ITEM 6: Tanks (MP Fuel Service), Clean and Inspect 38
WORK ITEM 7: Tanks (MP Fuel Storage and Overflow), Clean and Inspect 44
WORK ITEM 8: Refrigeration Plant, System Groom 50
WORK ITEM 9: Side Boat Davit, Renew 57
WORK ITEM 10: Oily Water Separator (OWS) System, Inspect and Groom 70
WORK ITEM 11: Tanks (Potable Water), Preserve (100%) 75
WORK ITEM 12: Tanks (Potable Water), Preserve (Partial) 79
WORK ITEM 13: Deck Covering (Ceramic Tile), Renew 83
WORK ITEM 14: Piping and Ducting Insulation, Renew 90
WORK ITEM 15: Dewatering Overboard Discharge Connections, Install 94
WORK ITEM 16: Flight Deck Floodlight Transformer, Motor Driven-Auto, Relocate 97
WORK ITEM 17: Hydraulic System Quick Disconnect, Install 105
WORK ITEM 18: MPAC Demister, Install 110
WORK ITEM 19: Weather Deck Scuppers, Install 114
WORK ITEM 20: Fuel Valves, Replace 121
WORK ITEM 21: Dry Provision Storeroom, Modify 125
WORK ITEM 22: Cargo Handling Elevator, Annual Inspection and Test, Perform 135
WORK ITEM 23: Wave Guide Dryer Flexible Hoses, Renew 139
WORK ITEM 24: Refrigeration Plant Flexible Hoses, Renew 143
WORK ITEM 25: Fire Detection System, Inspect and Test 160

REVISIONS RECORD

This page is used to record specification revisions, which may have occurred subsequent to a Revision 0 (Rev-0) package. Information listed is intended to provide contractors and field unit personnel a means to ensure all the current specification revision pages are present when reviewing or utilizing this specification package.

DATE	REV#	WORK ITEM#	CHANGES MADE

NOTE : All work item and paragraph numbers listed above for a given revision correspond to same numbers in the previous revision. This revised specification is self-contained with all of the above listed changes incorporated.

CONSOLIDATED LIST OF REFERENCES

The below-listed documents form a part of this specification to the extent specified herein. Approval/publication dates or revision dates/numbers are also identified, to ensure that same document versions are used at the time of specification writing and during contract execution.

All Coast guard drawings, technical publications, and standard specifications will be provided to contractors by the Coast Guard at an appropriate time, or upon request, free of charge. Other Government documents may be accessed – free of charge – from links located on the SFLC website. Commercial sites provide access to their respective documents.

COAST GUARD DRAWINGS

(AS7100001) (UNSIGNED) Coast Guard Drawing 750-WMSL-300-048, Rev C, Unit 4420 - 01 Level FR52 to FR67 Arr of Elect Eqpt (ASC300442)

Coast Guard Drawing 418A-WMSL-100-001, Rev B, General Arrangements

Coast Guard Drawing 418A-WMSL-100-006, Rev A, Inboard and Outboard Profiles

Coast Guard Drawing 418A-WMSL-100-1 Rev B, General Arrangements

Coast Guard Drawing 418A-WMSL-100-6 Rev B, Inboard and Outboard Profiles

Coast Guard Drawing 418A-WMSL-180-003, Rev C, SS-1-69-2 Fan Fdn Modifications

Coast Guard Drawing 418A-WMSL-512-003, Rev C, HVAC Modifications for Dry Provisions Stowage Mods

Coast Guard Drawing 418A-WMSL-530-001, Rev C, Potable Water System Diagram

Coast Guard Drawing 418A-WMSL-540-001, Rev C, Fuel Oil Diagram

Coast Guard Drawing 418A-WMSL-551-004, Rev B, Compressor Demister Rip-out and Install

Coast Guard Drawing 418A-WMSL-556-003, Rev -, Anchor Windlass HPU Filter Cart Quick Connections

Coast Guard Drawing 418A-WMSL-556-003, Rev A, Bow Thruster HPU Filter Cart Quick Connections

Coast Guard Drawing 418A-WMSL-556-005, Rev -, GT Hydraulic Start HPU Filter Cart Quick Connections

Coast Guard Drawing 418A-WMSL-556-006, Rev-, Stern Gate HPU Filter Cart Quick Connections

Coast Guard Drawing 418A-WMSL-583-001, Rev -, Folding Boom Crane HPU Filter Cart Quick Connections

Coast Guard Drawing 418A-WMSL-593-001, Rev A, Bilge & Oil Pollution Control System Diagram

Coast Guard Drawing 418A-WMSL-593-006, Rev -, Reroute Sewage Piping iwo Dry Provisions Rm

Coast Guard Drawing 418A-WMSL-672-002, Rev D, Dry Provisions Storeroom Modifications

Coast Guard Drawing 418A-WMSL-801-001 Rev A, Booklet of General Plan

Coast Guard Drawing 418A-WMSL-801-001 Rev B, Booklet of General Plan

Coast Guard Drawing 750 WMSL-100-530, Rev G, Modifications incidental to the installation of Allied Dual Pont Davit

Coast Guard Drawing 750-WMSL_520_1, Rev H, Seawater Cooling System

Coast Guard Drawing 750-WMSL-085-025, Rev -, Compartment Areas & Volumes NSC 3 & Follow (AS3085012)

Coast Guard Drawing 750-WMSL-100-011, Rev J, Unit 1110 Structure - Inner Bottom, 1st Platf, & 2nd Dk - Bow to Fr 10 (ASC100111)

Coast Guard Drawing 750-WMSL-100-017, Rev L, Unit 1310 Structure – Inner Bottom to 1st Platform – Fr 22 to Fr 35 (ASC100131)

Coast Guard Drawing 750-WMSL-100-021, Rev F, Unit 2100 Structure – Inner Bottom – Fr 35 to Fr 44 (ASC100210)

Coast Guard Drawing 750-WMSL-100-028, Rev J, Unit 2220 Structure – 1st Platf to 2nd Deck – Fr 44 to Fr 52 (ASC100222)

Coast Guard Drawing 750-WMSL-100-036, Rev N, Unit 3110 Structure 1st Platform and Below Frs 65-77 (ASC100311)

Coast Guard Drawing 750-WMSL-100-036, Rev P, Unit 3110 Structure 1st Platform and Below Frs 65-77 (ASC100311)

Coast Guard Drawing 750-WMSL-100-037, Rev H, Unit 3120 Structure- 1st Platf to 2nd Dk – Fr 64 To Fr 76 (ASC100312)

Coast Guard Drawing 750-WMSL-100-037, Rev J, Unit 3120 Structure - 1st Platf to 2nd Dk - Fr 64 to Fr 76 (ASC100312)

Coast Guard Drawing 750-WMSL-100-040, Rev N, Unit 3210 Structure – Inner Bot To 1st Platform – Fr 76 To Fr 88 (ASC100321)

Coast Guard Drawing 750-WMSL-100-051, Rev J, Unit 4310 Structure – 01 Level to 02 Level – Frame 44 to Frame 52

Coast Guard Drawing 750-WMSL-100-052, Rev J, Unit 4320 Structure – 02 Level and Above – Frame 48 to Frame 53

Coast Guard Drawing 750-WMSL-100-053, Rev J, Unit 4420 Structure - 01 Level and ABV- FR 52 to FR 67 (ASC100442)

Coast Guard Drawing 750-WMSL-100-37, Rev J, Unit 3120 Structure - 1st Platf to 2nd Dk - Fr 64 to Fr 76 (ASC100312)

Coast Guard Drawing 750-WMSL-100-552, Rev -, Unit 1120 Structure-Main Deck to 01 Level-Bow to Fr 10

Coast Guard Drawing 750-WMSL-100-553, Rev -, Unit 1240 Structure-Main Deck to 01 Level-Fr 9 to Fr 22

Coast Guard Drawing 750-WMSL-100-90, Rev A, General Arrangements NSC 7 and follow (ASC1700001)

Coast Guard Drawing 750-WMSL-167-001, Rev J, Manhole List Installation and Fabrication Details Ship Wide (ASC167001)

Coast Guard Drawing 750-WMSL-167-001, Rev K, Manhole List Installation and Fabrication Details Ship Wide (ASC167001)

Coast Guard Drawing 750-WMSL-202-501, Rev E, MCMS Remote Terminal Units Fire Zone No. 2 Deck Plan

Coast Guard Drawing 750-WMSL-300-002, Rev C, Electrical Standard Details (ASC300003)

Coast Guard Drawing 750-WMSL-300-062, Rev F, Electrical Standard Methods Handbook (SP001075)

Coast Guard Drawing 750-WMSL-320-004, Rev D, Power Sys Dk Plan - 1st Platf & Below, Fwd of Fr 36 & Aft of Fr 70 Cable Routing (ASC320003)

Coast Guard Drawing 750-WMSL-320-016, Rev F, Power Sys Deck Plan - 01 Level (ASC320009)

Coast Guard Drawing 750-WMSL-320-022, Rev F, Power Operated Valve Deck Plan Wiring Diagram

Coast Guard Drawing 750-WMSL-320-042, Rev C, Electrical One Line Diagram (NSC 6 SRD)

Coast Guard Drawing 750-WMSL-436-011, Rev E, Fire Detection Sys Deck Plan (ASC436009)

Coast Guard Drawing 750-WMSL-436-013, Rev C, Fire Detection Sys Cable Running Sheets (ASC436010)

Coast Guard Drawing 750-WMSL-436-014, Rev -, Fire Detection and Control System Schematic (ASC436028)

Coast Guard Drawing 750-WMSL-505-006, Rev D, List of Hoses

Coast Guard Drawing 750-WMSL-508-1, Rev C, Piping and Machinery Insulation Schedule and L/M (ASC508001)

Coast Guard Drawing 750-WMSL-512-040, Rev G, Vent & Air Cond Arr 2nd deck UNIT 3230 (ASC512323)

Coast Guard Drawing 750-WMSL-512-050, Rev D, Vent & Air Cond Arr 01 Lvl Unit 4420 (ASC512442)

Coast Guard Drawing 750-WMSL-512-059, Rev D, HVAC Equipment List (ASC512004)

Coast Guard Drawing 750-WMSL-512-534, Rev D, HVAC Equipment List

Coast Guard Drawing 750-WMSL-514-1, Rev C, Chilled Water System Schematic (ASC514014)

Coast Guard Drawing 750-WMSL-516-001, Rev E, A/C & Refrigeration Piping Diagram (ASC516001)

Coast Guard Drawing 750-WMSL-516-002, Rev K, Chilled Water System Diagram (ASC516002)

Coast Guard Drawing 750-WMSL-516-06, Rev F, Chilled Water Unit 1320 (ASC516132-CW)

Coast Guard Drawing 750-WMSL-516-07, Rev C, Chilled Water Unit 1330 (ASC516133-CW)

Coast Guard Drawing 750-WMSL-516-17, Rev C, Chilled Water Unit 3220 (ASC516323-CW)

Coast Guard Drawing 750-WMSL-520-001, Rev H, Seawater Cooling System Diagram

Coast Guard Drawing 750-WMSL-520-004, Rev E, Salt Water Cooling Unit 1320

Coast Guard Drawing 750-WMSL-520-005, Rev E, Salt Water Cooling System Unit 2110

Coast Guard Drawing 750-WMSL-520-008, Rev F, Salt Water Cooling Unit 2210

Coast Guard Drawing 750-WMSL-520-504, Rev D, Seawater Cooling Piping Mods IWO Dual Point Davit Installation

Coast Guard Drawing 750-WMSL-529-501, Rev B, Dewatering Ovbd Discharge Connections

Coast Guard Drawing 750-WMSL-530-019, Rev E, Potable Water Unit 3120 (ASC530312-PW)

Coast Guard Drawing 750-WMSL-540-054, Rev B, Fuel Transfer Unit 4310

Coast Guard Drawing 750-WMSL-551-014, Rev G, Compressed Air Piping & Joint Ident Unit 2120

Coast Guard Drawing 750-WMSL-551-022, Rev F, Compressed Air Piping & Joint Ident Unit 2320

Coast Guard Drawing 750-WMSL-556-505, Rev -, Steering Gear Hydraulic Filter Cart Quick Connections

Coast Guard Drawing 750-WMSL-572-002, Rev D, Elevator Arr & Instl (ASC572002)

Coast Guard Drawing 750-WMSL-583-002, Rev D, Small Boat Starboard Handling System Arrangement & Details

Coast Guard Drawing 750-WMSL-583-518, Rev D, Hydraulic Piping Mods IWO Dual Point Davit Installation

Coast Guard Drawing 750-WMSL-588-002, Rev C, Helo Visual Landing Aids Deck Plan Wiring Diagram (ASC588002)

Coast Guard Drawing 750-WMSL-588-004, Rev C, Helo Visual Landing Aids Elementary Wiring Diagram (ASC588003)

Coast Guard Drawing 750-WMSL-588-510, Rev , Helo Visual Landing Aids Elementary Wiring Diagram Mods

Coast Guard Drawing 750-WMSL-600-030, Rev K, Fab & Instl of Hull Outfit Design, Unit 3140 (ASC600314)

Coast Guard Drawing 750-WMSL-602-001, Rev C, Fab & Instl of Ships Name & Draft Markings (ASC602001)

Coast Guard Drawing 750-WMSL-621-009, Rev D, Joiner Bulkhead Arr Mn Dk Fr 64 Aft (ASC621009)

Coast Guard Drawing 750-WMSL-631-002, Rev M, Paint Schedule (ASC631002)

Coast Guard Drawing 750-WMSL-633-500, Rev H, Installation of Cathodic Protection

Coast Guard Drawing 750-WMSL-634-001, Rev H, Deck Covering Schedule (ASC634001)

Coast Guard Drawing 750-WMSL-635-001, Rev (-), Thermal & Acoustic Insulation (ASC635001)

Coast Guard Drawing 750-WMSL-635-001, Rev -, Thermal & Acoustic Insulation (ASC635001)

Coast Guard Drawing 750-WMSL-635-002, Rev K, Insulation Arr & Details Thermal, Acoustic, & Fire (ASC635002)

Coast Guard Drawing 750-WMSL-635-502, Rev -, Insulation Arr & Details Thermal, Acoustic, & Fire (WMSL 754 & Follow)

Coast Guard Drawing 750-WMSL-640-502, Rev -, Furniture Schedule (WMSL 754 & Follow)

Coast Guard Drawing 750-WMSL-651-002, Rev C, Scullery Arrangement (ASC651002)

Coast Guard Drawing 750-WMSL-802-503, Rev-, VLA Lighting Transformer Relocation

Coast Guard Drawing 418A-WMSL-551-001, Rev A, Compressed Air Diagram

NAVSEA Drawing 803-5184182, Rev B, Insulation, Passive Fire Protection- Installation Details

NAVSEA Drawing 804-5773931, Rev A, Acoustic & Thermal Insulation for Compartments Installation Details

NAVSEA Drawing 804-5959308, Rev -, Lifeline Systems

COAST GUARD PUBLICATIONS

BOAT DAVIT - MODELS DDP11000CTS & SP2200 (S/N: 2328-753, 2329-751, 2332-750) - TECHNICAL MANUAL

CGTTP 4-11.10B, March 2025, Water Supply and Wastewater Disposal (WSWD) Tactics, Techniques and Procedures (TTP)

Coast Guard Commandant Instruction (COMDTINST) M10360.3, Jun 2006, Coatings and Colors Manual

Coast Guard Technical Publication (TP) 7108A, SWBS 573, Jan 2022, Stores Elevator - Model 20833

Coast Guard Technical Publication (TP) 7168, January 2022, 3.2-ton Refrigeration Ships Store Plant

Coast Guard Technical Publication (TP) 7346A, SWBS 593, Mar 2022, Bilge Water Separator Ultra-Sep

Coast Guard Technical Publication (TP) 7902, “Preliminary’ Dual Point Davit – Models DDP11000CTS & SP2200 (S/N – 2313 & 2315) We need the serial number of the new Davit

Coast Guard Technical Publication (TP) 9919, SWBS 436, Feb 2022, Fire and Smoke Detection System (For Hull 757)

Commandant Instruction Manual COMDTINST M10360.3D, January 2014, Coatings and Colors Manual

Commandant Instruction Manual M5100.47 (COMDTINST M5100.47), February 2022, Safety and Environmental Health Manual

Fire Prevention and Response

Surface Forces Logistics Center Standard Specification 0000 (SFLC Standard Spec 0000), 2022, General Requirements

Surface Forces Logistics Center Standard Specification 0000 (SFLC Std Spec 0000), Latest Version, General Requirements

Surface Forces Logistics Center Standard Specification 0740 (SFLC Std Spec 0740), Latest Version, Welding and Allied Processes

Surface Forces Logistics Center Standard Specification 0740, (SFLC Standard Spec 0740), 2022, Welding and Allied Processes

Surface Forces Logistics Center Standard Specification 0850 (SFLC Std Spec 0850), 2022, General Requirements for Drawing Preparation

Surface Forces Logistics Center Standard Specification 3041 (SFLC Std Spec 3041), 2022, Shipboard Electrical Cable Test

Surface Forces Logistics Center Standard Specification 3041 (SFLC Std Spec 3401), 2022, Shipboard Electrical Cable Test

Surface Forces Logistics Center Standard Specification 3042 (SFLC Std Spec 3042), 2022, Shipboard Electrical Cable Removal, Relocation, Splice, Repair, And Installation

Surface Forces Logistics Center Standard Specification 3100 (SFLC Std Spec 3100), 2022, Inspect, Test and Recondition AC Synchronous Machines In-Place

Surface Forces Logistics Center Standard Specification 5000 (SFLC Std Spec 5000), 2022, Auxiliary Machine Systems

Surface Forces Logistics Center Standard Specification 5550 (SFLC Std Spec 5550), 2022, Fire Prevention and Response

Surface Forces Logistics Center Standard Specification 5550 (SFLC Std Spec 5550), Latest Version,

Surface Forces Logistics Center Standard Specification 6310 (SFLC Standard Spec 6310), 2022, Requirements for Preservation of Ship Structures

Surface Forces Logistics Center Standard Specification 6341 (SFLC Std Spec 6341), 2022, Install Interior Deck Covering Systems

Surface Forces Logistics Center Standard Specification 8636 (SFLC Std Spec 8636), 2022, Temporary Hull Accesses

OTHER REFERENCES

Allied Systems Drawing Number 68992, 2013, General Arrangement

Allied Systems Drawing Number 70082, 2013, Installation Drawing

American National Standards Institute (ANSI) A137.1, 2022, Standard Specification for Ceramic Tile

American Society for Nondestructive Testing (ASNT), Recommended Practice No. SNT-TC-1A, 2024, Personnel Qualification and Certification in Nondestructive Testing

American Society for Nondestructive Testing (ASNT), Standard No. ANSI/ASNT CP-189-2024, 2024, ASNT Standard for Qualification and Certification of Nondestructive Testing Personnel

American Society of Mechanical Engineers (ASME) A17.2, Guide for the Inspection of Elevators, Escalators and Moving Walks.

American Welding Society (AWS) B1.10M/ B1.10, 2016, Guide for Nondestructive Examination of Welds

American Welding Society (AWS) B1.11M/B1.11, 2015, Guide for the Visual Examination of Welds

American Welding Society (AWS) D1.1/D1.1M, 2025, Structural Welding Code – Steel

ASTM International (ASTM) F683, 2003, Standard Practice for Selection and Application of Thermal Insulation for Piping and Machinery

ASTM International (ASTM) F708, 2022, Standard Practice for Design and Installation of Rigid Pipe Hangers

ASTM Internationals (ASTM) G46-21, 2021, Standard Guide for Examination and Evaluation of Pitting Corrosion

Code of Federal Regulations (CFR) Title 29, Part 1910, 2017, Occupational Safety and Health Standards

Code of Federal Regulations (CFR) Title 29, Part 1915, Occupational Safety and Health Standards for Shipyard Employment

Code of Federal Regulations (CFR) Title 29, Part 1915, Subpart E, Sep 2015, Scaffolds, Ladders and Other Working Surfaces

IEEE Standard 45.6-2016, IEEE Recommended Practice for Electrical Installations on Shipboard – Electrical Testing

International Standards Organization (ISO) 4406, 1996, Hydraulic Fluid Power – Fluids – Method for Coding the Level of Contamination by Solid Particles

Manufacturers Standardization Society of the Valve and Fittings Industry (MSS), SP-58, 2018, Pipe Hangers and Supports – Materials, Design, Manufacture, Selection, Application and Installation

MIL-C-24757, Nov 1990, Cloth, Fiberglass, Coated

MIL-DTL-15024, Nov 1997, Plates, Tags and Bands for Identification of Equipment

MIL-DTL-24643, Nov 2023, Cables and Cords, Electric, Low Smoke, For Shipboard Use, General Specification for

MIL-DTL-32585A w/ Amendment 1, 2023, Insulation, Thermal and Acoustic, Fibrous Glass

Military Specification MIL-DTL-15024, November 1997, General Specification for Plates, Tags, and Bands for Identification of Equipment

MIL-PRF-24176C, 2020, Cement, Epoxy, Metal Repair and Hull Smoothing

MIL-PRF-24667D, 2021, Coating System, Non-Skid, for Roll, Spray, or Self-Adhering Application

MIL-STD-1689A, 1990, Fabrication, Welding, and Inspection of Ships Structure

MIL-STD-2003-1, Oct 2020, Electric Plant Installation, Standard Methods for Surface Ships & Submarines (Cable)

MIL-STD-2003-2, Oct 2020, Electric Plant Installation, Standard Methods for Surface Ships & Submarines (Equipment)

MIL-STD-2003-3, Oct 2020, Electric Plant Installation, Standard Methods for Surface Ships & Submarines (Penetrations)

National Fire Protection Association (NFPA) 72, 2022 Edition, National Fire Alarm and Signaling Code

NAVSEA Drawing 804-5773932, Rev A, Acoustic & Thermal Insulation for Ducts Installation Details

NAVSEA Drawing 804-5959214, Rev-, Piping Insulation - Installation Details

NAVSEA Technical Publication T9074-AD-GIB-010/1688, (TP 1688), July 2012, Requirements for Fabrication, Welding, and Inspection of Submarine Structure

Navy Medicine Manual P-5010-6 (NAVMED P-5010-6), January 2022, Manual of Naval Preventive Medicine Water Quality Afloat

Society of Automotive Engineers (SAE) J1273, 2009, Recommended Practices for Hydraulic Hose Assemblies

Society of Automotive Engineers (SAE) J1475, 2009, Hydraulic Hose Fittings for Marine Applications

Society of Automotive Engineers (SAE) J1942/1, 2010, Qualified Hoses for Marine Applications

The Society for Protective Coatings (SSPC) Surface Preparation Specification No.1 (SSPC-SP 1), 2016, Solvent Cleaning

The Society for Protective Coatings (SSPC) Surface Preparation Specification No.11 (SSPC-SP 11), 2020, Power Tool Cleaning to Bare Metal

The Society for Protective Coatings (SSPC) Surface Preparation Specification No.3 (SSPC-SP 3), 2024, Power Tool Cleaning

US Environmental Protection Agency Method 1664, Feb 1999, N-Hexane Extractable Material and Silica Gel Treated N-Hexane Extractable Material by Extraction and Gravimetry.

CONSOLIDATED LIST OF GOVERNMENT-FURNISHED PROPERTY

The following is a list of property, which the Government will furnish. This list supersedes any other material obligations indicated or implied by referenced drawings.

WORK ITEM	MTI	ITEM DESCRIPTION	NSN/PN	QTY	ESTIMATED COST ($/UNIT)
8	N	-3/8” Henry Seal Cap Valve (Main Valve P/N: 2031) Bonnet, Stem & Seat Disc Assembly	PN: 8-059-008	2	$184.16
8	N	1-5/8” Henry Seal Cap Valve (Main Valve PN: 2032), Bonnet, Stem & Seat Disc Assembly	PN: 8-059-010	3	$233.44
8	N	2-1/8” Henry Seal Cap Valve (Main Valve PN: 2033), Bonnet, Stem & Seat Disc Assembly	PN: 8-059-012	2	$440.57
8	N	Henry ”Y” Strainer Assembly (Main Assembly P/N: 896A-5/8S)	PN: 5-010-003 (Screen) PN: 5-023-100 (Gasket) PN: 2-023-080 (O-Ring)	6	
8	N	Sea Water Regulating Valve (Condenser). Metrex Valve Corp lead time is usually 6-8 weeks.	PN: M900P-125-LRFL2-3W	2	$2,552.00
8	N	Sea Water Regulating Valve (Oil Cooler). Metrex Valve Corp lead time is usually 3-4 weeks	PN: DA-868T-75-SE-M	2	$1,740.00
8	N	Disk, Rupturable	NSN: 4820-01-366-7330 PN: 026-31284-000	6	$2,274.06
8	N	Connector, Flexible, Liquid	NSN: 4730-01-561-7408 PN: 026-41967-000	2	$3,196.17
8	N	Connector, Flexible, Vapor	NSN: 5935-01-561-7463 PN: 026-41968-000	2	$5,303.11
8	N	Valve, Pressure Relief	NSN:4820-01-561-6471 PN:022-11355-000	6	$352.12
9	N	Allied Systems Dual Point Davit with Control Console	DDP11000CTS & SP2200 NSN:2030- 016306123	1 ea.	$480,000
9	Y	CB-OTH Mark IV (Coast Guard Drawing		1 ea	

		26B-CB-IV-801-001)			
10	YÂ	Monitor, Smart Bilge	NSN: 2040-01-600-0112	1 ea.	4,700.00
20	N	Flowserve Durco 8-BX2-L1111A1v1nz Performance Butterfly Valve with Gear Wheel Operator	NSN: 4820-01-F24-6975	2 ea.	5,302.00
21	N	Switch, Thermostatic	NSN: 5930-01-342-3911 (PN: 444-10)	2 ea.	100.00

***Government-loaned property, which shall be returned to the vessel upon completion of the availability.**
****New or refurbished equipment that the Government may provide for installation in place of existing equipment.**
*****Government-furnished property, which is to be supplied by either the vessel or the C4IT ServiceCenter**

CONSOLIDATED LIST OF CRITICAL INSPECTION ITEMS

The following is a list of work items, which contain Critical Inspection reports, which the Contractor must complete within the first 25% of the availability contract period (see SFLC Std Spec 0000, paragraph 3.2.6.5 (Inspection report particulars)):

Work Item	Title
2	Tanks (Ballast), Clean and Inspect
3	Tanks (Aviation Fuel Service), Clean and Inspect
4	Tanks (Aviation Fuel Stowage and Overflow), Clean and Inspect
5	Tanks (Potable Water), Clean and Inspect
9	Side Boat Davit, Renew
7	Tanks (MP Fuel Storage and Overflow), Clean and Inspect
8	Refrigeration Plant, System Groom
10	Oily Water Separator (OWS) System, Inspect and Groom
23	Wave Guide Dryer Flexible Hoses, Renew
24	Refrigeration Plant Flexible Hoses, Renew
25	Fire Detection System, Inspect and Test

PRINCIPAL CHARACTERISTICS

418' WMSL	
PHYSICAL	
Length overall	418' 0"
Length between perpendiculars	390' 0"
Maximum beam	54' 0"
Beam @ 01 level	47' 9-1/8"
Depth (01 level @ side to baseline)	39' 2-3/4"
01 deck camber foredeck	1/4" in 1'-0"
Minimum berth depth	20' 0"
Height of highest projection	Approximately 119'
Draft, design	14.40'
Design displacement	3925 long tons
MACHINERY	
Two diesel engines	MTU 20V, 20-cylinder 9,730 SHP each
One gas turbine	General Electric LM2500; 29,500 SHP
Type of propulsion	CODAG
Electrical system	24 Volt DC
Two controllable pitch propellers	Rolls-Royce 5 blade, 14' 0" diameter; 229 RPM max
Two reduction gears	RENK
One cross connect gear	RENK
HULL	
Hull material	5086 Aluminum
	HSLA-80 Steel
	ABS EH 36 Steel
	ABS AH 36
Frame spacing	
FWD of FR 9	2' 3"
FR 9 to FR 10	6' 9"
FR 10 to FR 98	4' 1"
FR 98 to FR 99	3'-8"
ELECTRICAL	
Power	Three 1360 kW, 450 V, 60 Hz, 3 Phase, 1800 RPM Caterpillar 3512B diesel engines with Baylor ship service generators
Shore tie cable	Seven MIL-C-24368/2 (NATO) shore power receptacles, 400 A each
TANK CAPACITIES	
Diesel oil	220,359 gal
Fresh water	12,454 gal
JP-5 Fuel	35,182 gal

General Requirements

1. SCOPE

1.1 Intent. This standard specification invokes general requirements for conducting vessel repairs performed by commercial contractors at a Coast Guard facility for Coast Guard vessels.

1.2 Term interchangeability. The terms 'Contractor', 'CG Yard', 'NAVSTA EVERETT', 'shipyard', 'Base', and 'Coast Guard Industrial' are used interchangeably in this specification. Where the primary service provider is Coast Guard personnel, references to contractor and other noted descriptors within this specification or within drawings, publications, SFLC Standard Specifications or other commercial and military references are deemed the same as prime service provider.

2. REFERENCES

COAST GUARD DRAWINGS

None

COAST GUARD PUBLICATIONS

Coast Guard Commandant Instruction (COMDTINST) M10360.3 (series), Coatings and Color Manual

Surface Forces Logistics Center Standard Specification 0000 (SFLC Std Spec 0000), Latest Version, General Requirements

Surface Forces Logistics Center Standard Specification 0740 (SFLC Std Spec 0740), Latest Version, Welding and Allied Processes

Surface Forces Logistics Center Standard Specification 5550 (SFLC Std Spec 5550), Latest Version,

Fire Prevention and Response

Surface Forces Logistics Center Standard Specification 6310 (SFLC Std Spec 6310), Latest Version, Requirements for Preservation of Ship Structures

OTHER REFERENCES

Code of Federal Regulations (CFR) Title 29, Part 1915, Occupational Safety and Health Standards for Shipyard Employment

NAVSEA Technical Publication T9074-AD-GIB-010/1688, (TP 1688), July 2012, Requirements for Fabrication, Welding, and Inspection of Submarine Structure

3. REQUIREMENTS

3.1 General. The Contractor must conform to all requirements specified in SFLC Std Spec 0000 and in this item, as applicable, during the performance of this availability. The requirements in this WI applies to all work under the scope of this contract, whether explicitly stated in all following work items or not, and to all other work subsequently authorized by changes, modifications, or extensions to the contract.

3.1.1 The Contractor must conform to all requirements specified in SFLC Std Spec 5550 and in the Fire Protection and Response work item, as applicable, during the performance of this availability.

3.1.1.1 Fire Safety Plan submission. The Contractor must submit a copy of the CFR 1915, Subpart P, Fire Safety Plan with the Contractor's bid when work will be conducted in a Contractor–owned facility. Include any MOA(s) with local firefighting facilities.

3.1.1.2 Fire Plan submission. The Contractor must submit a copy of the developed availability specific fire plan, as requested in the Fire Protection and Response work item, seven (7) days before the Arrival Conference.

NOTE

NAVSEA drawings listed will be available FOR INSPECTION ONLY from the Coast Guard Port Engineer post-award. SFLC will not redistribute NAVSEA documents. Contractors can apply to NAVSEA headquarters directly for copies.

3.2 Contractor-provided fire watch personnel. The Contractor must provide fire watch personnel and equipment.

3.3 Preservation requirements. The Contractor must accomplish all preservation tasks, including touch-ups, in accordance with SFLC Std Spec 6310.

3.3.1 Brand name approval. Ensure that all contractor-furnished coatings are in accordance with SFLC Std Spec 6310, Appendix C (Authorized Coatings for Use on Cutters and Boats).

3.3.2 Coating colors and system color schemes. The Contractor must obtain a written KO authorization to deviate from any coatings required in SFLC Std Spec 6310 Appendix C before work.

3.3.3 In-process quality control measures. The Contractor must abide by all the safety, preservation, and quality control requirements specified in SFLC Std Spec 0000, paragraph 3.2.4.2 (In-process QC measures for "critical-coated surfaces").

3.3.3.1 Quality control requirements. The Contractor must abide by the following when performing preservation related inspections. The following measurements must be randomly spaced throughout for the purposes of providing a representation of the entire prepared or coated surface.

3.3.3.1.1 Surface profile measurements. One surface profile measurement must be taken for every 200 square feet for the first 1000 square feet; for each additional 500 square feet or less, one profile measurement must be taken. Profile measurements must be taken in accordance with SFLC Std Spec 6310, paragraph 3.1.8.3 (Surface profile measurements). A "measurement" for surface profile is defined as follows:

- ASTM D4417, Method B: One profile measurement is the average (mean) of 10 individual readings.
- ASTM D4417, Method C: One profile measurement is the average (mean) of 2 individual readings.

3.3.3.1.2 Soluble salt conductivity measurements. 5 conductivity measurements must be taken every 1000 square feet. For submerged (immersed) applications conductivity measurements must not exceed 30 microsiemens/cm. For non-submerged (non-immersed) applications conductivity measurements must not exceed 70 microsiemens/cm. If a conductivity check fails, clean the surface in accordance with SFLC Std Spec 6310, paragraph 3.1.8.5 (Soluble salt removal).

3.3.3.1.3 Coating thickness measurements. Three area measurements must be taken for the first 1000 square feet; for each additional 1000 square feet, perform an additional area measurement. A "measurement" for coating thickness is defined as follows:

- SSPC-PA 2 defines an area measurement as 5 separate spot measurements randomly spaced throughout a 100 square foot area.
- SSPC-PA 2 defines a spot measurement as 3 gage readings and each new gage reading the probe must be moved to a new location within a 1.5-inch diameter circle defining the spot.

3.4 Welding and brazing requirements. The Contractor must perform all welding and allied processes, and NDE in accordance with SFLC Std Spec 0740.

NOTE

NAVSEA approval is NOT required for welding procedures submitted but the procedures must be reviewed and shown to satisfy the requirements set forth in NAVSEA TP 1688, by a welding regulatory agency. The requirements for welding Strenx 900 are considered the same as those for welding HY-130.

3.5 Environmental protection requirements. The Contractor must adhere to the following environmental protection requirements in accordance with the SFLC Stand Spec 0000:

3.5.1 USCG facilities. The Contractor must provide and maintain environmental protection as defined in SFLC Std Spec 0000 Appendix B, Requirements for Environmental Protection at USCG Facilities, during the performance of this availability. Contractor must plan for and provide environmental protective measures to control pollution that develops during normal practice, as well as plan for and provide environmental protective measures required to correct conditions that develop during the project. Contractor must comply with applicable Federal, state, and local laws, codes, ordinances, and regulations in their entirety. Any reference to a specific portion of a Federal, state, or local law, code, ordinance, or regulation in this or any other item must not be construed to mean that relief is provided from any other sections of the law, code, ordinance, or regulation.

3.5.1.1 USCG Generator status. The activity Generator Status for the Coast Guard Facility is H1869030036.

3.5.1.2 Plans and permits. The CG Facility has unit specific permits including the following:

- Spill Prevention Control and Countermeasures (SPCC) Plan: Unit has a SPCC Plan which requires certain unit-specific procedures be followed for the storage, inspection, and transfer of petroleum products in containers 55 gallons or greater.
- National Pollutant Discharge Elimination System (NPDES) Storm Water (SW) Permit: Unit has an NPDES SW permit which requires unit-specific procedures be followed for the storage and inspection of equipment and materials which may contribute contaminants to storm water discharges.
- Air Emission Permit: Unit has an Air Emission Permit which requires unit-specific procedures be followed for the emissions of VOCs and hazardous air pollutants.

3.5.2 Test and procedures. The Contractor is required to promptly conduct tests and procedures for the purpose of assessing whether operations are in compliance with applicable Environmental Laws. Analytical work must be done by qualified laboratories; and where required by law, the laboratories must be certified.

3.5.3 Regulatory notifications. The Contractor is responsible for all regulatory notification requirements in accordance with Federal, State and local regulations. In cases where the Coast Guard must also provide public notification, such as storm water permitting, the Contractor must coordinate with the Contracting Officer or COR, and if work is being performed at a USCG Facility, the local Facility Engineer or Engineering Officer. The Contractor must submit copies of all regulatory notifications to the Contracting Officer and the local Facility Engineer or Engineering Officer prior to commencement of work activities. Regulatory notifications must be provided for including but not limited to demolition, renovation, National Pollutant Discharge Elimination System (NPDES) defined site work, and remediation of controlled substances such as asbestos, hazardous waste, and lead paint.

3.5.4 Environmental manager. The Contractor must appoint in writing an Environmental Manager for the project, who is responsible for coordinating Contractor compliance with Federal, State, local, and station environmental requirements. The Environmental Manager must ensure compliance with Hazardous Waste Program requirements, including hazardous waste handling, storage, manifesting, and disposal; implement the Contractors' Environmental Management Plan; ensure that all environmental permits are obtained, maintained, and closed out; ensure compliance with Storm Water Program Management requirements; ensure compliance with Hazardous Materials including storage, handling, and reporting requirements; as well as coordinate any remediation of regulated substances such as lead, asbestos, and polychlorinated biphenyl (PCB). This may be a collateral position; however the individual must be trained to accomplish the following duties; ensure waste segregation and storage compatibility requirements are met; inspect and manage Satellite Accumulation areas; ensure only authorized personnel add wastes to containers; ensure all Contractor personnel are trained in 40 CFR requirements and individual position requirements; coordinate removal of waste containers; and maintain the Environmental Records binder and required documentation, including environmental permits compliance and close-out.

3.5.5 HW disposal. Contractor must comply with SFLC Std Spec 0000 Appendix B, Requirements For Environmental Protection At USCG Facilities for HW disposal, and ensure that waste removals are conducted during normal business hours (0800-1600) on Monday through Friday (excluding holidays).

3.5.6 Additional Requirements. The Contractor must be aware of the following:

3.5.6.1 No Contractor or Subcontractor must have the authority to sign a Hazardous Waste Manifest using the Coast Guard facility's EPA Generator ID Number or remove contract generated hazardous waste from the Coast Guard facility without COR or KO-approval.

3.5.6.2 Local environmental regulations at the Government facilities may be more stringent. As with all environmental regulations, the Contractor must prepare for and comply with local and state regulations.

3.5.6.3 Coast Guard facilities do not maintain Facilities Response Plans (FRPs) per 33 CFR 154. Contractor must furnish the FRP when required for over-the-water liquids transfers to and from vessels, and is required for oil/fuel transfers to/from vessels for 250 barrels (10,500 gallons) or more.

3.6 Local Policy. The Contractor must refer to site (e.g., Base) Regulations and Instructions for details regarding local policies (e.g., crane services, parking, or facility usage).

3.7 SFLC Standard Specification approved changes. Approved updates to the 2022 SFLC Standard Specifications will appear here.

3.7.1 SFLC Standard Specification 5550: Replace paragraph 3.11.3 to state, "Material supporting imminent work shall be brought on the cutter and stored where the work is being performed. Material that appreciably contributes to fire load shall be removed at the end of each work shift when personnel are not present. Trash, debris, and packaging materials shall be promptly removed from the vessel at the end of each work shift and not allowed to accumulate." Advance the paragraph numbering of the Fire Prevention and Safety Inspection form to 3.11.4.

4. NOTES

4.1 QA inspection forms. QA inspection forms (QA-1 thru QA-5), required in SFLC Std Spec 6310 to be completed and submitted during preservation of "critical-coated surfaces", are provided at the end of this document.

QA-1 - QUALITY ASSURANCE INSPECTION FORM
(PRESERVATION CHECKLIST)

VESSEL NAME	HULL #	WORK ITEM #	WORK ITEM TITLE
LOCATION OF WORK (INCL. FRAME #'S)			**AREA (SQFT)**

CHECKPOINT 1 – COATING SYSTEM COMPLIANCE	
	Ensure all coatings are in compliance with SFLC Std Spec 6310, Appendix C.
CHECKPOINT 2 - PAINT STORAGE	
	Ensure all coatings are kept at a temperature of 65 to 85°F at all times, unless otherwise specified by the coating mfg.
CHECKPOINT 3 - AMBIENT CONDITIONS	
	Ensure surface and surrounding temperatures are each between 50 and 90°F for water-containing coatings, and 35 and 95°F for other coatings, unless otherwise specified by the coating manufacturer(s).
	Ensure maximum relative humidity (RH) is as follows, from surface preparations through final curing of topcoat: 50% for tanks, voids, and vent plenum; and 85% for all other areas, unless otherwise specified by manufacturer(s).
	Ensure surface temperature is at least 5°F above the dew point, unless otherwise specified by the coating mfg.
CHECKPOINT 4 - PRE-SURFACE PREPARATION	
	Remove surface contaminants (soluble salts, loose rust, mud, and marine growth) with low pressure fresh water wash down (maximum 5,000 psi). If oil and grease are present, perform solvent cleaning, as per SSPC SP-1.
	Verify equipment setup, blast media, and surface preparation methods match designated test coupon.
CHECKPOINT 5 - SURFACE PREPARATION	
	Verify environmental conditions (see CHECKPOINT 3).
	Ensure cleanliness of prepared surface is as per specification (i.e.: SSPC SP-11, SP-10, SP WJ-2…).
	Verify surface anchor profile using ASTM D4417-Methods B or C against SFLC Std Spec 6310. Conduct profile readings at a minimum of 5 locations for the first 1000-sqft area, and 2 locations for each succeeding 1000-sqft area.
	Measure soluble salt conductivity in accordance with SSPC-Guide 15. Conduct 5 measurements per each 1000-sqft area (max. threshold: 70 microsiemens/cm for non-submerged surfaces, 30 microsiemens/cm for submerged surfaces).
CHECKPOINT 6 - PRIMER COAT APPLICATION	
	Verify environmental conditions (see CHECKPOINT 3).
	Verify proper mixing and stand-in (induction) times.
	Ensure no paint is applied when the temperature is expected to drop to freezing before the paint has dried.
	Ensure surfaces are completely dry, unless otherwise allowed by the coating manufacturer(s).
	Verify wet film thickness (WFT) at random, to prevent under or over application. Verify final DFT.
	Brush out all runs, sags, drips, and puddles.
	Perform visual inspection for holidays and other defects.
CHECKPOINT 7 – STRIPE COAT APPLICATION	
	Verify environmental conditions (see CHECKPOINT 3).
	Ensure overcoating window is as per manufacturer's instructions.
	After primer coat (mist coat after inorganic zinc), brush-apply un-thinned coat of same primer paint over edges, weld seams, cut-outs, and areas of complex geometries @ 3-4 mils wet film thickness (WFT).
CHECKPOINT 8 – TOP COAT APPLICATION	
	Verify environmental conditions (see CHECKPOINT 3).
	Ensure overcoating window is as per manufacturer's instructions.
	Verify proper mixing and stand-in (induction) times, as applicable.
	Verify wet film thickness at random, to prevent under or over application.
	Brush out all runs, sags, drips, and puddles.
CHECKPOINT 9 – FINAL INSPECTION	
	Verify final system dry film thickness. Conduct 5 sets of 3 readings for each of the first 3 100-sqft areas, followed by 5 sets of 3 readings for each succeeding 1000-sqft area.
	Ensure that system cure is in accordance with manufacturer's recommendation for intended service.
	Ensure potable water tank exhaust ventilation is maintained continuously from and during coating application through final system cure, to exhaust all solvent to the atmosphere and to prevent solvent entrapment.
	For immersion coatings (including tank U/W body), record date and time of the following events: Final coat application: / ; Return to service or removal from environment controls: /
CHECKPOINT 10 – RECORD KEEPING	
	Complete, sign, and submit all provided QA Inspection Forms.

NAME OF QP-1/AMPP INSPECTOR	SIGNATURE	CERT. #	DATE / TIME
NAME OF CG REPRESENTATIVE	**SIGNATURE**	**UNIT**	**DATE/TIME**

QA-2 - QUALITY ASSURANCE INSPECTION FORM
(ENVIRONMENTAL READINGS)

VESSEL NAME	HULL #	WORK ITEM #	WORK ITEM TITLE

Use one sheet for each activity. Record conditions every four hours from before surface preparation to application of final coating system coat.

DATE & TIME	ACTIVITY (SURFACE PREPARATION, PRIMER COAT, BARRIER COAT, TOP COAT, ETC…)	LOCATION (FRAME & DECK, RELATION TO EQUIPMENT, ETC.)	TEMPERATURE				% REL. HUMID-ITY
			DEW PT.	SURFACE	AMBIENT	ΔT | DP - SURFACE |	

NAME OF QP-1/AMPP INSPECTOR	SIGNATURE	CERT. #	DATE / TIME
NAME OF CG REPRESENTATIVE	**SIGNATURE**	**UNIT**	**DATE/TIME**

QA-3a - QUALITY ASSURANCE INSPECTION FORM
(SURFACE PROFILE LOG FOR PROFILE MEASUREMENTS IAW ASTM D4417-METHOD-C)

VESSEL NAME	HULL #	WORK ITEM #	WORK ITEM TITLE
LOCATION OF WORK (FRAME REFERENCES)			**AREA (SQFT)**

SURFACE PREPARATION METHOD		PROFILE ACHIEVED (MILS)		
		MIN	MAX	MEAN
SSPC-SP-10/AMPP No. 2	☐			
SSPC-SP WJ-2/AMPP WJ-2	☐			
SSPC-SP-3	☐			
SSPC-SP-11	☐			
SSPC-SP-11 (inaccessible area)	☐			
Brush-blasting (non-metallic substrate)	☐			
ABRASIVE MANUFACTURER:		**ABRASIVE SIEVE SIZE:**		

PLACE SURFACE PROFILE REPLICA TAPES IN THE SPACES PROVIDED BELOW, TO SERVE AS PERMANENT QA RECORD. MAINTAIN A SEPARATE LOG FOR EACH LOCATION. WHEN AN AREA IS DIVIDED INTO SEPARATE SECTIONS, MAINTAIN A SEPARATE LOG FOR EACH SECTION.

Place Surface Profile Replica Tape Here	Place Surface Profile Replica Tape Here	Place Surface Profile Replica Tape Here
Reading (mils):	Reading (mils):	Reading (mils):
Place Surface Profile Replica Tape Here	Place Surface Profile Replica Tape Here	Place Surface Profile Replica Tape Here
Reading (mils):	Reading (mils):	Reading (mils):
Place Surface Profile Replica Tape Here	Place Surface Profile Replica Tape Here	Place Surface Profile Replica Tape Here
Reading (mils):	Reading (mils):	Reading (mils):
Place Surface Profile Replica Tape Here	Place Surface Profile Replica Tape Here	Place Surface Profile Replica Tape Here
Reading (mils):	Reading (mils):	Reading (mils):
Place Surface Profile Replica Tape Here	Place Surface Profile Replica Tape Here	Place Surface Profile Replica Tape Here
Reading (mils):	Reading (mils):	Reading (mils):
MEAN MIL READING (IAW ASTM D4417-METHOD C) FOR ABOVE 15 READINGS:		

NAME OF QP-1/AMPP INSPECTOR	SIGNATURE	CERT. #	DATE / TIME
NAME OF CG REPRESENTATIVE	**SIGNATURE**	**UNIT**	**DATE/TIME**

QA-3b - QUALITY ASSURANCE INSPECTION FORM

(SURFACE PROFILE LOG FOR PROFILE MEASUREMENTS IAW ASTM D4417-METHOD-B)

VESSEL NAME	HULL #	WORK ITEM #	WORK ITEM TITLE
LOCATION OF WORK (INCL. FRAME #'S)			**AREA (SQFT)**

SURFACE PREPARATION METHOD		PROFILE ACHIEVED (MILS)		
		MIN	MAX	MEAN
SSPC-SP-10/AMPP No. 2	☐			
SSPC-SP WJ-2/AMPP WJ-2	☐			
SSPC-SP-3	☐			
SSPC-SP-11	☐			
SSPC-SP-11 (inaccessible area)	☐			
Brush-blasting (non-metallic substrate)	☐			
ABRASIVE MANUFACTURER:		**ABRASIVE SIEVE SIZE:**		

RECORD MEASUREMENTS TAKEN IN THE SPACES PROVIDED BELOW, TO SERVE AS PERMANENT QA RECORD. MAINTAIN SEPARATE LOG FOR EACH LOCATION. WHEN AN AREA IS DIVIDED INTO SEPARATE SECTIONS, MAINTAIN A SEPARATE LOG FOR EACH SECTION.					
Reading (mils):					
Reading (mils):					
Reading (mils):					
Reading (mils):					
Reading (mils):					
Reading (mils):					
Reading (mils):					
Reading (mils):					
Reading (mils):					
Reading (mils):					
Mean Mils Reading (IAW ASTM D4417-Method B for above 10 readings (by column):					
Mean Reading (mils)					

NAME OF QP-1/AMPP INSPECTOR	SIGNATURE	CERT. #	DATE / TIME
NAME OF CG REPRESENTATIVE	**SIGNATURE**	**UNIT**	**DATE/TIME**

QA-4 - QUALITY ASSURANCE INSPECTION FORM
(SURFACE SOLUBLE SALT CONDUCTIVITY LOG)

VESSEL NAME	HULL #	WORK ITEM #	WORK ITEM TITLE
LOCATION OF WORK (INCL. FRAME #'S)			AREA (SQFT)

SOLUBLE SALT CONDUCTIVITY MEASUREMENTS IAW SSPC-GUIDE 15.		
DATE	TEST LOCATIONS	CONDUCTIVITY (MICROSIEMENS/CM)

NAME OF QP-1/AMPP INSPECTOR	SIGNATURE	CERT. #	DATE / TIME
NAME OF CG REPRESENTATIVE	SIGNATURE	UNIT	DATE/TIME

QA-5 - QUALITY ASSURANCE DATA FORM
(COATING THICKNESS)

(Use one sheet for each sequence)

VESSEL NAME	HULL #	WORK ITEM #	WORK ITEM TITLE

COATING MFG	PRODUCT NAME	BATCH #	INDUCTION TIME	COATING SYSTEM SEQUENCE (PRIMER/TOUCHUP/3RD COAT, ETC.)

DRY FILM THICKNESS (DFT) MEASUREMENTS IAW SSPC-PA 2.						
SPOT	1	2	3	4	5	AVERAGE VALUE
*BASE METAL READING (BMR)						
*Required, If Magnetic Pull-Off (Type I/Banana) Gauge Is Used.						

LOCATION (FRAME REFERENCE):								
SPOT	1	2	3	4	5	OVERALL AVG. DFT	ADJUSTMENTS	
1							AVG. BMR	DEVIATION
2								
3						BEFORE ADJUSTMENTS	AFTER ADJUSTMENTS	
AVG.								
LOCATION (FRAME REFERENCE):								
SPOT	1	2	3	4	5	OVERALL AVG. DFT	ADJUSTMENTS	
1							AVG. BMR	DEVIATION
2								
3						BEFORE ADJUSTMENTS	AFTER ADJUSTMENTS	
AVG.								
LOCATION (FRAME REFERENCE):								
SPOT	1	2	3	4	5	OVERALL AVG. DFT	ADJUSTMENTS	
1							AVG. BMR	DEVIATION
2								
3						BEFORE ADJUSTMENTS	AFTER ADJUSTMENTS	
AVG.								

APPLICATION METHOD (AIRLESS, CONVENTIONAL SPRAY, ROLLED)	AVERAGE DFT

NAME OF QP-1/AMPP INSPECTOR	SIGNATURE	CERT. #	DATE / TIME
NAME OF CG REPRESENTATIVE	SIGNATURE	UNIT	DATE/TIME

4.2 Tank and Void Assessment form.

SFLC-ESD-25	TANK AND VOID ASSESSMENT FORM
PRINT RESET	

GENERAL DATA	Note: Use SFLC-ESD-29 for Compartments other than Tanks & Voids.		
Inspector's Name:	Organization:	Contact Info:	
Cutter Name:	Cutter Class:	Hull:	
Tank:	Service:	Tank Area:	Gallons:
Solid Balast:	Access Compt:	Date:	Assessment Reason:

ACCESS DATA	
Manhole and cover condition:	Tank Penetration Condition:

VENT OVERFLOW DATA		
Present: ◯Yes ◯ No	Check Valve Installed: ◯Yes ◯No	Check Valve Operates Properly: ◯Yes ◯No

LADDER DATA		
NR of Ladder(s) Present: ◯Yes ◯No	Ladder Damaged: ◯Yes ◯No	Ladder Material:

TANK LEVEL INDICATOR (TLI) DATA		
TLI Present in Tank: ◯Yes ◯No	TLI Damaged: ◯Yes ◯No	TLI Type:

SOUNDING TUBE DATA	
Sounding Tube Present in Tank: ◯Yes ◯No	Sounding Tube Damaged: ◯Yes ◯No
Striker Plate Damaged (>50%): ◯Yes ◯No	

CATHODIC PROTECTION DATA		
Cathodic Protection in Tank: ◯Yes ◯No	Total Zincs:	Number of Zincs > 50% Depleted:

	1-6		Cleanliness & Housekeeping
Clean to light layer or residue		1-2 (G)	Comments:
Loose accumulation scale		3-4 (Y)	
Impending residue and sediments		5-6 (R)	

	%	1-6		Coating Systems
All Painted Surfaces			1-2 (G)	Comments:
			3-4 (Y)	
			5-6 (R)	

	%	1-6		Structural
Corrosion			1-2 (G)	Comments:
			3-4 (Y)	
			5-6 (R)	
Pitting & Grooving			1-2 (G)	Comments:
			3-4 (Y)	
			5-6 (R)	

Page 1 of 2 18MAR2015

SFLC-ESD-25	TANK AND VOID ASSESSMENT SHEET
PRINT	

Structural Integrity Data						
Estimated Total Linear Feet of Structure Requiring Repair:			Estimated Total Square Feet of Plating Requiring Repair:			
Cracks/ Fractures Present:	◯ Yes	◯ No	Buckling/Deflections/ Distortions Present:	◯ Yes	◯ No	
Holes Present:	◯ Yes	◯ No	Material Wastage Present:	◯ Yes	◯ No	
All Welds Intact:	◯ Yes	◯ No	Structural Evaluation Recommended:	◯ Yes	◯ No	

PHOTOGRAPHS

Pictures Taken (enter quantity):

Note: To add pictures to this form, Work Station must have Adobe Acrobat (not Reader) installed.
Add all photos and photo comments to a word document and save file. Open this form and click "Combine Files". Add the document with photos you've just saved and save as a new combined .pdf files.

Additional Comments:

Page 2 of 2 18MAR2015

WORK ITEM 1: Fire Prevention, Provide

1. SCOPE

1.1 Intent. This work item describes the requirements for the Contractor to provide a fire plan, discuss fire safety procedures, maintain fire boundaries and fittings, conduct inspections and keep firefighting systems in a ready condition to address fires.

1.2 Government-furnished property.

None.

2. REFERENCES

COAST GUARD DRAWINGS

None

COAST GUARD PUBLICATIONS

Surface Forces Logistics Center Standard Specification 5550 (SFLC Std Spec 5550), 2022, Fire Prevention and Response

OTHER REFERENCES

MIL-C-24757, Nov 1990, Cloth, Fiberglass, Coated

3. REQUIREMENTS

3.1 Fire Plan. The Contractor must develop and implement a written fire plan in accordance with Paragraph 3.1 of SFLC Std Spec 5550, including Paragraph 3.1.3.

3. 1.1 Fire Prevention Responsible Party. The Contractor must appoint a Fire Prevention Responsible Party (FPRP) in accordance with Paragraph 3.1.4 of SFLC Std Spec 5550.

3.1.1.1. Any item in SFLC Std Spec 5550 that requires FPRP approval, also requires COR approval.

3.1.1.2. The Contractor must designate the FPRP in the Fire Plan and submit a CFR if the designated FPRP changes.

3.1.1.3. In addition to responsibilities listed in SFLC Std Spec 5550, the FPRP is responsible for the

following tasks:

- Conduct all inspections per paragraph 3.7 of this work item. The FPRP may designate a representative to conduct these inspections on their behalf.
- Ensuring that contractor employees and sub-contractors understand the Fire Plan and all other requirements of this work item. This includes (but is not limited to) informing contractor/subcontractor employees of danger signals and egress procedures aboard the ship.

3.2 Fire Prevention and Response Conference. The Contractor must participate in the Fire Prevention and Response Conference as detailed in Paragraph 3.12 of SFLC Std Spec 5550.

3.2.1 At a minimum, the following personnel from the Contractor must attend the Fire Prevention and Response conference, the Fire Familiarization Tour and the Initial Inspection:

- Ship availability superintendent
- FPRP

3.2.2 The Fire Prevention and Response Conference, the Fire Responsibility Familiarization tour and the Initial Inspection must occur before the start of work on board the ship. Coordinate schedule with the COR.

3.2.3. If the work is being performed at the Contractor's facility, then the Contractor must invite their fire response personnel for the familiarization tour in accordance with Paragraph 3.12.2.1 of SFLC Standard Spec 5550.

NOTE

Requirements for the Initial Inspection are covered in Paragraph 3.7 of this work item

3.3 Fire Zones. The Contractor must comply with the fire zone requirements from Paragraph 3.2 of SFLC Std Spec 5550.

3.3.1 Paragraph 3.2.3 of SFLC Std Spec 5550 is only applicable if the requirements of Paragraph 3.2.2 of SFLC Std Spec 5550 cannot be accomplished.

3.3.2 All material boundaries must be treated as fire boundaries.

3.3.3 All fire curtains must meet the requirements of MIL-C-24757. Disregard the NFPA 105 requirement in Paragraph 3.2.2 of SFLC Std Spec 5550.

3.4 Inoperable Fittings Log. The Contractor must inform the COR via CFR of fittings that are blocked or made inoperable per Paragraph 3.3 of SFLC Std Spec 5550. The Contractor does not need to maintain a separate Inoperable Fittings Log.

3.5. Firefighting systems. The Contractor must maintain fire protection systems per Paragraph 3.4 of SFLC Std Spec 5550.

3.5.1 Contractor personnel are NOT authorized to operate fixed firefighting systems per Paragraph 3.4.6.6.1 of SFLC Std Spec 5550

3.5.2 The existing arrangement of AFFF equipment meets the requirements of Paragraph 3.4.11 of SFLC Std. Spec 5550. This paragraph is only applicable if the Contractor blocks or moves AFFF material or equipment.

3.5.3 The existing arrangement of portable fire extinguishers meets the 50-foot requirement of Paragraph 3.4.12.1 of SFLC Std Spec 5550. This paragraph is only applicable if the Contractor blocks or moves fire extinguishers.

3.6. Fire Alarm. The Contractor must comply with the requirements of Paragraph 3.7 of SFLC Std Spec 5550 if the fire alarm system will be manipulated. The "additional personnel" mentioned in Paragraph 3.7.1 of SFLC Std Spec 5550 must be provided by the Contractor.

3.7 Fire Prevention Inspections. The Contractor must conduct inspections in accordance with SFLC Std Spec 5550 Paragraph 3.11.

3.7.1 All inspections in paragraph 3.11 of SFLC Standard Spec 5550 must be conducted in the presence of a Coast Guard Inspector.

3.7.2 Disregard paragraph 3.11.1 of SFLC Std Spec 5550 and replace with the following:

Initial Inspection. The FPRP, along with the COR (or a designated representative), must conduct an initial inspection to evaluate potential fire hazards in all areas with scheduled work. This inspection must note the existing status of all items in Paragraph 3.11.2 of SFLC Standard Spec 5550. Submit the results of the initial inspection to the COR via a CFR. This inspection must occur before commencing contract work.

4. NOTES

None

WORK ITEM 2: Tanks (Ballast), Clean and Inspect

1. SCOPE

1.1 Intent. This work item describes the requirements for the Contractor to clean and inspect the following tank(s):

TABLE 1 – LIST OF TANKS

TYPE OF STRUCTURE	LOCATION	CAPACITY - 95% (GALLONS)	TANK CONTENT DISPOSAL (GALLONS)	*REQUIRED MEASUREMENT OF PITS/UT FAIRING COMPOUND KITS
Ballast Tank	5-F-0-W	26,505	1395	Pits - 100 UT - 400 Fairing Compound – 2

*** For Bidding Purposes**

1.2 Government-furnished property.

None.

2. REFERENCES

COAST GUARD DRAWINGS

Coast Guard Drawing 418A-WMSL-100-001, Rev B, General Arrangements

Coast Guard Drawing 750-WMSL-100-011, Rev J, Unit 1110 Structure - Inner Bottom, 1st Platf, & 2nd Dk - Bow to Fr 10 (ASC100111)

Coast Guard Drawing 750-WMSL-167-001, Rev J, Manhole List Installation and Fabrication Details Ship Wide (ASC167001)

Coast Guard Drawing 750-WMSL-633-500, Rev H, Installation of Cathodic Protection

COAST GUARD PUBLICATIONS

Surface Forces Logistics Center Standard Specification 0000 (SFLC Std Spec 0000), 2022, General Requirements

Surface Forces Logistics Center Standard Specification 0740 (SFLC Std Spec 0740), 2022, Welding and Allied Processes

Surface Forces Logistics Center Standard Specification 6310 (SFLC Std Spec 6310), 2022, Requirements for Preservation of Ship Structures

OTHER REFERENCES

None.

3. REQUIREMENTS

3.1 General.

3.1.1 CIR. The Contractor must submit a CIR for the inspections listed in the following paragraph(s):

- 3.7 Inspection

3.1.2 Tech Rep. The contractor must provide the services of a certified Technical Representative, holding an ASNT Central Certification Program (ACCP) Level II certification or better, or SNT-TC-TA NDT Level II or better to accomplish the following on site:

- Accomplish the applicable requirements in SFLC Std Spec 0740 Appendix C, Nondestructive Examination (Ultrasonic Inspection).

3.1.3 Protective measures. The Contractor must furnish and install all protective measures in accordance with SFLC Std Spec 0000, paragraph 3.3.3 (Vessel component, space, and equipment protection).

3.1.4 Interferences. The Contractor must handle all interferences in accordance with SFLC Std Spec 0000, paragraph 3.3.5 (Interferences). Known interferences include, but are not limited to the following:

- TLIs
- Piping
- Residual tank contents/fluids

NOTE

Coast Guard personnel will operate all shipboard machinery and equipment.

3.2 Operational test, initial. Prior to commencement of work, the Contractor must witness Coast Guard personnel perform an initial operational test of all items or shipboard devices to be disturbed, used, repaired, or altered, to demonstrate existing operational condition. Submit a CFR.

3.2.1 Perform an initial operational test of each tank TLIs to demonstrate that each radar head/sensor is functional (i.e., Digital readout is displayed).

3.2.2 Ensure that there is interface/communication between the TLI sensor and the Machinery Control and Monitoring System (i.e. Digital readout at the TLI is identical to that displayed).

3.3 Tank opening. The Contractor must remove the tank manhole cover(s) and ventilate the confined spaces in accordance with SFLC Std Spec 0000, Paragraphs 3.3.1.1 and 3.3.1.2. The Contractor must provide fall protection to tank manhole cover when opened for ventilation/work. The Contractor must matchmark the manhole cover lid(s) to the flange prior to removal for proper reinstallation.

3.4 Tank content and waste disposal. The Contractor must dispose of residual tank contents listed in Table 1 and any cleaning fluids in compliance with all applicable Federal, state, and local laws, ordinances and regulations. Notify the COR (in writing) at least 48 hours prior to removal of waste and

fluids. Document a complete chain of custody record of the removed tank contents and generated wastes, from the vessel to the point of final destination or delivery. Submit chain of custody record to the COR upon completion of work.

3.5 Temporary plugs. The Contractor must plug all inlet and outlet piping in the tank to prevent contaminants from entering the tank or piping system for the entire duration of the tank cleaning and inspection. Use plugs with an attached lanyard, ring or other system that will ensure plugs are not lost in the pipe openings.

3.5.1 Plug log. The Contractor must keep a written record of all installed plugs. Keep a separate list for each tank. Maintain a plug accountability log posted immediately outside the tank to prevent any of the installed temporary plugs from being lost inside the tank or left behind inside at tank closure. The log must include the type and size of each plug, installation date, and removal date. Submit this log to the COR after completion of work item via a CFR.

3.5.2 The Contractor must ensure that all plugs are removed from each tank upon completion of work in the tank.

3.6 Tank cleaning. The Contractor must clean all designated tank interior surfaces free of all foreign materials, such as residual water, sediment, sludge, rust, or biological growth, taking care not to damage the coating system (if applicable).

3.6.1 The Contractor must accomplish all requirements of SFLC Std Spec 6310, 3.1.6.4 (Surface contaminant removal) to achieve the cleanliness requirements of SSPC-SP 1, including a low-pressure (maximum 5,000 psi) freshwater wash down of the surfaces.

3.6.2 Remove cleaning media and residues continuously from the tank during the washing process. Remove any residual wash media and wipe up residual moisture with clean lint-free cloths. Wipe the interior tank structure dry and free of all cleaning agents.

3.7 Inspection. The Contractor, in the presence of the CG Inspector, must inspect all tank interior surfaces, including, but not limited to bulkheads, floor and overhead plating, structural members, manhole cover surfaces, fasteners and gasket seating surfaces. Using the Tank and Void Assessment form in General Requirements section 4.2, submit a CIR including the following, as applicable:

- Tank structural condition
- Condition of tank coating, including dimensions, percentage, location, and type of coating failure
- Tank level indicator (TLI) and/or float switch condition
- Sounding tube and striker plate condition
- Vent pipe and check valve condition
- Manhole cover, flange distortion check, and flange stud welds
- Suction and discharge piping condition
- Ladder condition
- Fastener material and condition
- Zinc anode remaining percentage and anode stud condition
- Pit measurements

- Ultrasonic thickness (UT) measurements

NOTE

Depending on the tank conditions, it may not be necessary to perform all the pit measurements and ultrasonic measurements indicated on Table 1.

3.7.1 Pit measurement. The Contractor must measure all pits within each tank/location listed in Table 1, in accordance with SFLC Std Spec 0740, Paragraph 3.13 (Evaluation of pitting corrosion). The results of these measurements must be included in the inspection report, showing where pit measurements were taken and the depth of the pit. For bidding purposes, use Table 1 for number of pit measurements per tank.

3.7.2 Ultrasonic thickness (UT) measurement. Ultrasonic thickness (UT) measurement. The Contractor must take UT measurements in the surrounding area of any pit measuring greater than 25% of plate thickness. UT measurements must be taken in the four quadrants at an equal-distant radius from the pit center until full plate thickness is measured. UT measurements must be conducted in accordance with SFLC Std Spec 0740, Appendix C, using Coast Guard Drawings listed in Section 2. The results of these measurements (original thickness, measured thickness, and any observed cracks) and the locations where they were taken must be included in the inspection report. For bidding purposes, use Table 1 for number of UT measurements per tank.

3.8 Substrate fairing and repair by filling Epoxy for shallow pits and small corrosions (i.e. pits < 25% or corrosions < 25%). The Contractor must repair small pin holes, shallow pitted substrates (with remaining plate thicknesses over 75% of required plate thicknesses), and fair corroded substrates (with remaining cross sections over 75% of required cross section areas), after removing coating, in accordance with SFLC Std Spec 6310 and manufacturers' instructions.

- For bidding purposes, procure the number of epoxy fairing kit(s) (0.5 Gallon/5 Kg Kit) as shown in Table 1.
- Epoxy fairing compound must meet the requirements of SFLC Std Spec 6310 Appendix C (MIL-PRF-24176 Cement, Epoxy, Metal Repair & Hull Smoothing) and be compatible with fluid in the tank.
- Turn over all unused kits to the COR.

NOTE

"Substrate fairing and repair by filling Epoxy for shallow pits and corrosions (i.e. pits < 25% or corrosions < 25%)" is a supplement barrier intending to help delay penetration.

3.9 Tank closing. The Contractor must ensure that the tank(s) remain open for approximately 24 hours after completion of any authorized repair and preservation procedures. Notify the COR at least 48 hours prior to closing the tank(s). After satisfactory inspection by the Coast Guard Inspector and completion of all authorized repairs, remove all installed temporary plugs and document removal via signature on the plug log by the Coast Guard Inspector and Contractor prior to tank closing. Close tank manhole cover(s) using new gasket material, nuts, washers and grommets in accordance with Coast Guard Drawing 750-WMSL-167-001, in the presence of the Coast Guard Inspector. Chase threads on studs to ensure even installation of the access covers. Covers must be reinstalled in their proper orientation with the marks made during tank opening. Do not use power tools to secure the manhole covers. Submit a CFR with the completed plug log.

NOTE

Coast Guard personnel will operate all shipboard machinery and equipment.

3.10 Operational test, post repairs. After completion of work, the Contractor must witness Coast Guard personnel demonstrate operational test of all items or shipboard devices that have been disturbed, used, repaired, altered, or installed to be in satisfactory operating condition. Submit a CFR.

3.10.1 Perform a post-work operational test of each tank TLIs to demonstrate that each radar head/sensor is functional (i.e., Digital readout is displayed).

3.10.2 Ensure that there is interface/communication between the TLI sensor and the Machinery Control and Monitoring System (i.e. Digital readout at the TLI is identical to that displayed).

3.11 Touch-up preservation. The Contractor must prepare and coat all new and disturbed surfaces, and all disturbed manhole cover external surfaces to match existing adjacent surfaces in accordance with SFLC Std Spec 6310, paragraph 3.1.13 (Touch-ups and minor coating repairs). Do not paint any manhole cover fasteners.

4. NOTES

This section is not applicable to this work item.

WORK ITEM 3: Tanks (Aviation Fuel Service), Clean and Inspect

1. SCOPE

1.1 Intent. This work item describes the requirements for the Contractor to clean and inspect the following tank(s):

TABLE 1 – LIST OF TANKS

TYPE OF TANK	LOCATION	CAPACITY - 95% (GALLONS)	TANK CONTENT DISPOSAL (GALLONS)	*REQUIRED MEASUREMENT OF PITS/UT FAIRING COMPOUND KITS
JP-5 Service	3-68-6-J	1692	100	Pits - 25 UT - 100 Fairing Compound – 1/2
JP-5 Service	3-68-8-J	1552	100	Pits - 25 UT - 100 Fairing Compound – 1/2

*** For Bidding Purposes**

1.2 Government-furnished property.

None.

2. REFERENCES

COAST GUARD DRAWINGS

Coast Guard Drawing 418A-WMSL-801-001, Rev A, Booklet of General Plans

Coast Guard Drawing 750-WMSL-100-037, Rev H, Unit 3120 Structure- 1st Platf to 2nd Dk – Fr 64 To Fr 76 (ASC100312)

Coast Guard Drawing 750-WMSL-167-001, Rev J, Manhole List Installation and Fabrication Details Ship Wide (ASC167001)

COAST GUARD PUBLICATIONS

Surface Forces Logistics Center Standard Specification 0000 (SFLC Std Spec 0000), 2022, General Requirements

Surface Forces Logistics Center Standard Specification 0740 (SFLC Std Spec 0740), 2022, Welding and Allied Processes

Surface Forces Logistics Center Standard Specification 6310 (SFLC Std Spec 6310), 2022, Requirements for Preservation of Ship Structures

OTHER REFERENCES

None.

3. REQUIREMENTS

3.1 General.

3.1.1 CIR. The Contractor must submit a CIR for the inspections listed in the following paragraph(s):

- 3.7 Inspection

3.1.2 Tech Rep. The contractor must provide the services of a certified Technical Representative, holding an ASNT Central Certification Program (ACCP) Level II certification or better, or SNT-TC-TA NDT Level II or better to accomplish the following on site:

- Accomplish the applicable requirements in SFLC Std Spec 0740 Appendix C, Nondestructive Examination (Ultrasonic Inspection).

3.1.3 Protective measures. The Contractor must furnish and install all protective measures in accordance with SFLC Std Spec 0000, paragraph 3.3.3 (Vessel component, space, and equipment protection).

3.1.4 Interferences. The Contractor must handle all interferences in accordance with SFLC Std Spec 0000, paragraph 3.3.5 (Interferences). Known interferences include, but are not limited to the following:

- TLIs
- Piping
- Residual tank contents/fluids

NOTE

Coast Guard personnel will operate all shipboard machinery and equipment.

3.2 Operational test, initial. Prior to commencement of work, the Contractor must witness Coast Guard personnel perform an initial operational test of all items or shipboard devices to be disturbed, used, repaired, or altered, to demonstrate existing operational condition. Submit a CFR.

3.2.1 Perform an initial operational test of each tank TLIs to demonstrate that each radar head/sensor is functional (i.e., Digital readout is displayed).

3.2.2 Ensure that there is interface/communication between the TLI sensor and the Machinery Control and Monitoring System (i.e. Digital readout at the TLI is identical to that displayed).

3.3 Tank opening. The Contractor must remove the tank manhole cover(s) and ventilate the confined spaces in accordance with SFLC Std Spec 0000, Paragraphs 3.3.1.1 and 3.3.1.2. The Contractor must provide fall protection to tank manhole cover when opened for ventilation/work. The Contractor must matchmark the manhole cover lid(s) to the flange prior to removal for proper reinstallation.

WARNING

Do not use the Fuel Service or Transfer systems to drain the water from the tank. Excessive fuel contamination will result.

3.4 Tank content and waste disposal. The Contractor must dispose of residual tank contents listed in Table 1 and any cleaning fluids in compliance with all applicable Federal, state, and local laws, ordinances and regulations. Notify the COR (in writing) at least 48 hours prior to removal of wastes and fluids. Document a complete chain of custody record of the removed tank contents and generated wastes, from the vessel to the point of final destination or delivery. Submit document to the COR upon completion of work.

3.5 Temporary plugs. The Contractor must plug all inlet and outlet piping in the tank to prevent contaminants from entering the tank or piping system for the entire duration of the tank cleaning and inspection. Use plugs with an attached lanyard, ring or other system that will ensure plugs are not lost in the pipe openings.

3.5.1 Plug log. The Contractor must keep a written record of all installed plugs. Keep a separate list for each tank. Maintain a plug accountability log posted immediately outside the tank to prevent any of the installed temporary plugs from being lost inside the tank or left behind inside at tank closure. The log must include the type and size of each plug, installation date, and removal date. Submit this log to the COR after completion of work item via a CFR.

3.5.2 The Contractor must ensure that all plugs are removed from each tank upon completion of work in the tank.

3.6 Tank cleaning. The Contractor must clean all designated tank interior surfaces free of all foreign materials, such as residual water, sediment, sludge, rust, or biological growth, taking care not to damage the coating system (if applicable).

3.6.1 The Contractor must accomplish all requirements of SFLC Std Spec 6310, 3.1.6.4 (Surface contaminant removal) to achieve the cleanliness requirements of SSPC-SP 1, including a low-pressure (maximum 5,000 psi) fresh water wash down of the surfaces.

3.6.2 Remove cleaning media and residues continuously from the tank during the washing process. Remove any residual wash media and wipe up residual moisture with clean lint-free cloths. Wipe the interior tank structure dry and free of all cleaning agents.

3.7 Inspection. The Contractor, in the presence of the CG Inspector, must inspect all tank interior surfaces, including, but not limited to bulkheads, floor and overhead plating, structural members, manhole cover surfaces, fasteners and gasket seating surfaces. Using the Tank and Void Assessment form in General Requirements section 4.2, submit a CIR including the following, as applicable:

- Tank structural condition
- Condition of tank coating, including dimensions, percentage, location, and type of coating failure
- Tank level indicator (TLI) and/or float switch condition
- Sounding tube and striker plate condition
- Vent pipe and check valve condition
- Manhole cover, flange distortion check, and flange stud welds

- Suction and discharge piping condition
- Ladder condition
- Fastener material and condition
- Zinc anode condition, if applicable (remaining percentage,)
- Pit measurements
- Ultrasonic thickness (UT) measurements

NOTE

Depending on the tank conditions, it may not be necessary to perform all the pit measurements and ultrasonic measurements indicated on Table 1.

3.7.1 Pit measurement. The Contractor must measure all pits within each tank/location listed in Table 1, in accordance with SFLC Std Spec 0740, Paragraph 3.13 (Evaluation of pitting corrosion). The results of these measurements must be included in the inspection report, showing where pit measurements were taken and the depth of the pit. For bidding purposes, use Table 1 for number of pit measurements per tank.

3.7.2 Ultrasonic thickness (UT) measurement. Ultrasonic thickness (UT) measurement. The Contractor must take UT measurements in the surrounding area of any pit measuring greater than 25% of plate thickness. UT measurements must be taken in the four quadrants at an equal-distant radius from the pit center until full plate thickness is measured. UT measurements must be conducted in accordance with SFLC Std Spec 0740, Appendix C, using Coast Guard Drawings listed in Section 2. The results of these measurements (original thickness, measured thickness, and any observed cracks) and the locations where they were taken must be included in the inspection report. For bidding purposes, use Table 1 for number of UT measurements per tank.

3.8 Substrate fairing and repair by filling Epoxy for shallow pits and small corrosions (i.e. pits < 25% or corrosions < 25%). The Contractor must repair small pin holes, shallow pitted substrates (with remaining plate thicknesses over 75% of required plate thicknesses), and fair corroded substrates (with remaining cross sections over 75% of required cross section areas), after removing coating, in accordance with SFLC Std Spec 6310 and manufacturers' instructions.

- For bidding purposes, procure the number of epoxy fairing kit(s) (0.5 Gallon/5 Kg Kit) as shown in Table 1.
- Epoxy fairing compound must meet the requirements of SFLC Std Spec 6310 Appendix C (MIL-PRF-24176 Cement, Epoxy, Metal Repair & Hull Smoothing) and be compatible with fluid in the tank.
- Turn over all unused kits to the COR.

NOTE

"Substrate fairing and repair by filling Epoxy for shallow pits and corrosions (i.e. pits < 25% or corrosions < 25%)" is a supplement barrier intending to help delay penetration.

3.9 Tank closing. The Contractor must ensure that the tank(s) remain open for approximately 24 hours after completion of any authorized repair and preservation procedures. Notify the COR at least 48 hours prior to closing the tank(s). After satisfactory inspection by the Coast Guard Inspector and completion of

all authorized repairs, remove all installed temporary plugs and document removal via signature on the plug log by the Coast Guard Inspector and Contractor prior to tank closing. Close tank manhole cover(s) using new gasket material, nuts and grommets in accordance with Coast Guard Drawing 750-WMSL-167-001, in the presence of the Coast Guard Inspector. Chase threads on studs to ensure even installation of the access covers. Covers must be reinstalled in their proper orientation with the marks made during tank opening. Do not use power tools to secure the manhole covers. Submit a CFR with the completed plug log.

NOTE

Coast Guard personnel will operate all shipboard machinery and equipment.

3.10 Operational test, post repairs. After completion of work, the Contractor must witness Coast Guard personnel demonstrate operational test of all items or shipboard devices that have been disturbed, used, repaired, altered, or installed to be in satisfactory operating condition. Submit a CFR.

3.10.1 Perform a post-work operational test of each tank TLIs to demonstrate that each radar head/sensor is functional (i.e., Digital readout is displayed).

3.10.2 Ensure that there is interface/communication between the TLI sensor and the Machinery Control and Monitoring System (i.e. Digital readout at the TLI is identical to that displayed).

3.11 Touch-up preservation. The Contractor must prepare and coat all new and disturbed surfaces, and all disturbed manhole cover external surfaces to match existing adjacent surfaces in accordance with SFLC Std Spec 6310, paragraph 3.1.13 (Touch-ups and minor coating repairs). Do not paint any manhole cover fasteners.

4. NOTES

This section is not applicable to this work item.

WORK ITEM 4: Tanks (Aviation Fuel Stowage and Overflow), Clean and Inspect

1. SCOPE

1.1 Intent. This work item describes the requirements for the Contractor to clean and inspect the following tank(s):

TABLE 1 – LIST OF TANKS

TYPE OF TANK	LOCATION	CAPACITY - 95% (GALLONS)	TANK CONTENT DISPOSAL (GALLONS)	*REQUIRED MEASUREMENT OF PITS/UT FAIRING COMPOUND KITS
JP-5 Storage	5-70-0-J	13,124	1,000	Pits - 75 UT - 300 Fairing Compound – 1
JP-5 Overflow	4-70-2-J	827	100	Pits - 10 UT - 40 Fairing Compound – 1/2

*** For Bidding Purposes**

1.2 Government-furnished property.

None.

2. REFERENCES

COAST GUARD DRAWINGS

Coast Guard Drawing 418A-WMSL-801-001, Rev B, Booklet of General Plans

Coast Guard Drawing 750-WMSL-100-036, Rev N, Unit 3110 Structure 1st Platform and Below Frs 65-77 (ASC100311)

Coast Guard Drawing 750-WMSL-167-001, Rev K, Manhole List Installation and Fabrication Details Ship Wide (ASC167001)

COAST GUARD PUBLICATIONS

Surface Forces Logistics Center Standard Specification 0000 (SFLC Std Spec 0000), 2022, General Requirements

Surface Forces Logistics Center Standard Specification 0740 (SFLC Std Spec 0740), 2022, Welding and Allied Processes

Surface Forces Logistics Center Standard Specification 6310 (SFLC Std Spec 6310), 2022, Requirements for Preservation of Ship Structures

OTHER REFERENCES

None.

3. REQUIREMENTS

3.1 General.

3.1.1 CIR. The Contractor must submit a CIR for the inspections listed in the following paragraph(s):

- 3.7 Inspection

3.1.2 Tech Rep. The contractor must provide the services of a certified Technical Representative, holding an ASNT Central Certification Program (ACCP) Level II certification or better, or SNT-TC-TA NDT Level II or better to accomplish the following on site:

- Accomplish the applicable requirements in SFLC Std Spec 0740 Appendix C, Nondestructive Examination (Ultrasonic Inspection).

3.1.3 Protective measures. The Contractor must furnish and install all protective measures in accordance with SFLC Std Spec 0000, paragraph 3.3.3 (Vessel component, space, and equipment protection).

3.1.4 Interferences. The Contractor must handle all interferences in accordance with SFLC Std Spec 0000, paragraph 3.3.5 (Interferences). Known interferences include, but are not limited to the following:

- TLIs
- Piping
- Residual tank contents/fluids

NOTE

Coast Guard personnel will operate all shipboard machinery and equipment.

3.2 Operational test, initial. Prior to commencement of work, the Contractor must witness Coast Guard personnel perform an initial operational test of all items or shipboard devices to be disturbed, used, repaired, or altered, to demonstrate existing operational condition. Submit a CFR.

3.2.1 Perform an initial operational test of each tank TLIs to demonstrate that each radar head/sensor is functional (i.e., Digital readout is displayed).

3.2.2 Ensure that there is interface/communication between the TLI sensor and the Machinery Control and Monitoring System (i.e. Digital readout at the TLI is identical to that displayed).

3.3 Tank opening. The Contractor must remove the tank manhole cover(s) and ventilate the confined spaces in accordance with SFLC Std Spec 0000, Paragraphs 3.3.1.1 and 3.3.1.2. The Contractor must

provide fall protection to cover tank manhole cover when opened for ventilation/work. The Contractor must matchmark the manhole cover lid(s) to the flange prior to removal for proper reinstallation.

WARNING

Do not use the Fuel Service or Transfer systems to drain the water from the tank. Excessive fuel contamination will result.

3.4 Tank content and waste disposal. The Contractor must dispose of residual tank contents listed in Table 1 and any cleaning fluids in compliance with all applicable Federal, state, and local laws, ordinances and regulations. Notify the COR (in writing) at least 48 hours prior to removal of wastes and fluids. Document a complete chain of custody record of the removed tank contents and generated wastes, from the vessel to the point of final destination or delivery. Submit document to the COR upon completion of work.

3.5 Temporary plugs. The Contractor must plug all inlet and outlet piping in the tank to prevent contaminants from entering the tank or piping system for the entire duration of the tank cleaning and inspection. Use plugs with an attached lanyard, ring or other system that will ensure plugs are not lost in the pipe openings.

3.5.1 Plug log. The Contractor must keep a written record of all installed plugs. Keep a separate list for each tank. Maintain a plug accountability log posted immediately outside the tank to prevent any of the installed temporary plugs from being lost inside the tank or left behind inside at tank closure. The log must include the type and size of each plug, installation date, and removal date. Submit this log to the COR after completion of work item via a CFR.

3.5.2 The Contractor must ensure that all plugs are removed from each tank upon completion of work in the tank.

3.6 Tank cleaning. The Contractor must clean all designated tank interior surfaces free of all foreign materials, such as residual water, sediment, sludge, rust, or biological growth, taking care not to damage the coating system (if applicable).

3.6.1 The Contractor must accomplish all requirements of SFLC Std Spec 6310, 3.1.6.4 (Surface contaminant removal) to achieve the cleanliness requirements of SSPC-SP 1, including a low-pressure (maximum 5,000 psi) freshwater wash down of the surfaces.

3.6.2 Remove cleaning media and residues continuously from the tank during the washing process. Remove any residual wash media and wipe up residual moisture with clean lint-free cloths. Wipe the interior tank structure dry and free of all cleaning agents.

3.7 Inspection. The Contractor, in the presence of the CG Inspector, must inspect all tank interior surfaces, including, but not limited to bulkheads, floor and overhead plating, structural members, manhole cover surfaces, fasteners and gasket seating surfaces. Using the Tank and Void Assessment form in General Requirements section 4.2, submit a CIR including the following, as applicable:

- Tank structural condition
- Condition of tank coating, including dimensions, percentage, location, and type of coating failure
- Tank level indicator (TLI) and/or float switch condition
- Sounding tube and striker plate condition

- Vent pipe and check valve condition
- Manhole cover, flange distortion check, and flange stud welds
- Suction and discharge piping condition
- Ladder condition
- Fastener material and condition
- Zinc anode condition, if applicable (remaining percentage,)
- Pit measurements
- Ultrasonic thickness (UT) measurements

NOTE

Depending on the tank conditions, it may not be necessary to perform all the pit measurements and ultrasonic measurements indicated on Table 1.

3.7.1 Pit measurement. The Contractor must measure all pits within each tank/location listed in Table 1, in accordance with SFLC Std Spec 0740, Paragraph 3.13 (Evaluation of pitting corrosion). The results of these measurements must be included in the inspection report, showing where pit measurements were taken and the depth of the pit. For bidding purposes, use Table 1 for number of pit measurements per tank.

3.7.2 Ultrasonic thickness (UT) measurement. The Contractor must take UT measurements in the surrounding area of any pit measuring greater than 25% of plate thickness. UT measurements must be taken in the four quadrants at an equal-distant radius from the pit center until full plate thickness is measured. UT measurements must be conducted in accordance with SFLC Std Spec 0740, Appendix C, using Coast Guard Drawings listed in Section 2. The results of these measurements (original thickness, measured thickness, and any observed cracks) and the locations where they were taken must be included in the inspection report. For bidding purposes, use Table 1 for number of UT measurements per tank.

3.8 Substrate fairing and repair by filling Epoxy for shallow pits and small corrosions (i.e. pits < 25% or corrosions < 25%). The Contractor must repair small pin holes, shallow pitted substrates (with remaining plate thicknesses over 75% of required plate thicknesses), and fair corroded substrates (with remaining cross sections over 75% of required cross section areas), after removing coating, in accordance with SFLC Std Spec 6310 and manufacturers' instructions.

- For bidding purposes, procure the number of epoxy fairing kit(s) (0.5 Gallon/5 Kg Kit) as shown in Table 1.
- Epoxy fairing compound must meet the requirements of SFLC Std Spec 6310 Appendix C (MIL-PRF-24176 Cement, Epoxy, Metal Repair & Hull Smoothing) and be compatible with fluid in the tank.
- Turn over all unused kits to the COR.

NOTE

"Substrate fairing and repair by filling Epoxy for shallow pits and corrosions (i.e. pits < 25% or corrosions < 25%)" is a supplement barrier intending to help delay penetration.

3.9 Tank closing. The Contractor must ensure that the tank(s) remain open for approximately 24 hours after completion of any authorized repair and preservation procedures. Notify the COR at least 48 hours prior to closing the tank(s). After satisfactory inspection by the Coast Guard Inspector and completion of all authorized repairs, remove all installed temporary plugs and document removal via signature on the plug log by the Coast Guard Inspector and Contractor prior to tank closing. Close tank manhole cover(s) using new gasket material in accordance with Coast Guard Drawing 750-WMSL-167-001, in the presence of the Coast Guard Inspector. Chase threads on studs to ensure even installation of the access covers. Renew all nuts, washers, and grommets (including those that are missing) in accordance with Coast Guard Drawing 750-WMSL-167-001. Covers must be reinstalled in their proper orientation with the marks made during tank opening. Do not use power tools to secure the manhole covers. Submit a CFR with the completed plug log.

NOTE

Coast Guard personnel will operate all shipboard machinery and equipment.

3.10 Operational test, post repairs. After completion of work, the Contractor must witness Coast Guard personnel demonstrate operational test of all items or shipboard devices that have been disturbed, used, repaired, altered, or installed to be in satisfactory operating condition. Submit a CFR.

3.10.1 Perform a post-work operational test of each tank TLIs to demonstrate that each radar head/sensor is functional (i.e., Digital readout is displayed).

3.10.2 Ensure that there is interface/communication between the TLI sensor and the Machinery Control and Monitoring System (i.e. Digital readout at the TLI is identical to that displayed).

3.11 Touch-up preservation. The Contractor must prepare and coat all new and disturbed surfaces, and all disturbed manhole cover external surfaces to match existing adjacent surfaces in accordance with SFLC Std Spec 6310, paragraph 3.1.13 (Touch-ups and minor coating repairs). Do not paint any manhole cover fasteners.

4. NOTES

This section is not applicable to this work item.

WORK ITEM 5: Tanks (Potable Water), Clean and Inspect

1. SCOPE

1.1 Intent. This work item describes the requirements for the Contractor to clean and inspect the following tank(s):

TABLE 1 - LIST OF TANKS

TYPE OF TANK	LOCATION	CAPACITY - 95% (GALLONS)	TANK CONTENT DISPOSAL (GALLONS)	*REQUIRED MEASUREMENT OF PITS/UT FAIRING COMPOUND KITS
Potable Water	3-68-3-W	5,916	887	Pits - 50 UT - 200 Fairing Compound – 1/2
Potable Water	3-68-4-W	5,916	887	Pits - 50 UT - 200 Fairing Compound – 1/2

*** For Bidding Purposes**

1.2 Government-furnished property.

None.

2. REFERENCES

COAST GUARD DRAWINGS

Coast Guard Drawing 418A-WMSL-530-001, Rev C, Potable Water System Diagram

Coast Guard Drawing 418A-WMSL-801-001, Rev B, Booklet of General Plans

Coast Guard Drawing 750-WMSL-100-037, Rev J, Unit 3120 Structure - 1st Platf to 2nd Dk - Fr 64 to Fr 76 (ASC100312)

Coast Guard Drawing 750-WMSL-167-001, Rev K, Manhole List Installation and Fabrication Details Ship Wide (ASC167001)

Coast Guard Drawing 750-WMSL-530-019, Rev E, Potable Water Unit 3120 (ASC530312-PW)

COAST GUARD PUBLICATIONS

CGTTP 4-11.10B, March 2025, Water Supply and Wastewater Disposal (WSWD) Tactics, Techniques and Procedures (TTP)

Commandant Instruction Manual M5100.47 (COMDTINST M5100.47), February 2022, Safety and Environmental Health Manual

Surface Forces Logistics Center Standard Specification 0000 (SFLC Std Spec 0000), 2022, General Requirements

Surface Forces Logistics Center Standard Specification 0740 (SFLC Std Spec 0740), 2022, Welding and Allied Processes

Surface Forces Logistics Center Standard Specification 6310 (SFLC Std Spec 6310), 2022, Requirement for Preservation of Ship Structures

OTHER REFERENCES

Navy Medicine Manual P-5010-6 (NAVMED P-5010-6), January 2022, Manual of Naval Preventive Medicine Water Quality Afloat

The Society for Protective Coatings (SSPC) Surface Preparation Specification No.1 (SSPC-SP 1), 2016, Solvent Cleaning

3. REQUIREMENTS

3.1 General.

3.1.1 CIR. The Contractor must submit a CIR for the inspections listed in the following paragraph(s):

- 3.7 Inspection

3.1.2 Tech Rep. The contractor must provide the services of a certified Technical Representative, holding an ASNT Central Certification Program (ACCP) Level II certification or better, or SNT-TC-TA NDT Level II or better to accomplish the following on site:

- Accomplish the applicable requirements in SFLC Std Spec 0740 Appendix C, Nondestructive Examination (Ultrasonic Inspection).

3.1.3 Protective measures. The Contractor must furnish and install all protective measures in accordance with SFLC Std Spec 0000, paragraph 3.3.3 (Vessel component, space, and equipment protection).

3.1.4 Interferences. The Contractor must handle all interferences in accordance with SFLC Std Spec 0000, paragraph 3.3.5 (Interferences). Known interferences include, but are not limited to the following:

- Fluid contents
- Piping
- RO system components
- Deck grating
- High purity water tank

NOTE

Coast Guard personnel will operate all shipboard machinery and equipment.

3.2 Operational test, initial. Prior to commencement of work, the Contractor must witness Coast Guard personnel perform an initial operational test of the equipment listed below to demonstrate existing operational condition. Submit a CFR.

- Test each tank TLIs to demonstrate that each radar head/sensor is functional (i.e., Digital

readout is displayed).

- Ensure that there is interface/communication between the TLI sensor and the Machinery Control and Monitoring System (i.e. Digital readout at the TLI is identical to that displayed).
- Potable Water Pumps

3.3 Tank Opening. The Contractor must open and ventilate the confined spaces in accordance with SFLC Std Spec 0000, paragraph 3.3.1.1 (Temporary ventilation) and 3.3.1.2 (Confined or enclosed space entry and hot work). The Contractor must provide fall protection to cover tank manhole cover when opened for ventilation/work. The Contractor must matchmark the manhole cover lid(s) to the flange prior to removal for proper reinstallation.

3.4 Tank content and waste disposal. The Contractor must dispose of residual tank contents listed in Table 1 and any cleaning fluids in compliance with all applicable Federal, state, and local laws, ordinances and regulations. Notify the COR (in writing) at least 48 hours prior to removal of wastes and fluids. Document a complete chain of custody record of the removed tank contents and generated wastes, from the vessel to the point of final destination or delivery. Submit chain of custody record to the COR upon completion of work.

3.5 Temporary plugs. The Contractor must plug all inlet and outlet piping in the tank to prevent contaminants from entering the tank or piping system for the entire duration of the tank cleaning and inspection. Use plugs with an attached lanyard, ring or other system that will ensure plugs are not lost in the pipe openings.

3.5.1 Plug log. The Contractor must keep a written record of all installed plugs. Keep a separate list for each tank. Maintain a plug accountability log posted immediately outside the tank to prevent any of the installed temporary plugs from being lost inside the tank or left behind inside at tank closure. The log must include the type and size of each plug, installation date, and removal date. Submit this log to the COR after completion of work item via a CFR.

3.5.2 The Contractor must ensure that all plugs are removed from each tank upon completion of work in the tank.

3.6 Tank cleaning. The Contractor must clean all designated tank interior surfaces free of all foreign materials, such as residual water, sediment, sludge, rust, or biological growth, taking care not to damage the coating system (if applicable).

3.6.1 The Contractor must accomplish all requirements of SFLC Std Spec 6310, 3.1.6.4 (Surface contaminant removal) to achieve the cleanliness requirements of SSPC-SP 1, including a low-pressure (maximum 5,000 psi) freshwater wash down of the surfaces when possible.

3.6.2 Remove cleaning media and residues continuously from the tank during the washing process. Remove any residual wash media and wipe up residual moisture with clean lint-free cloths. Wipe the interior tank structure dry and free of all cleaning agents.

3.7 Inspection. The Contractor, in the presence of the CG Inspector, must inspect all tank interior surfaces, including, but not limited to bulkheads, floor and overhead plating, structural members, manhole cover surfaces, fasteners and gasket seating surfaces. Using the Tank and Void Assessment form in General Requirements section 4.2, submit a CIR including the following, as applicable:

- Tank structural condition

- Condition of tank coating, including dimensions, percentage, location, and type of coating failure
- Tank level indicator (TLI) and/or float switch condition
- Sounding tube and striker plate condition
- Vent pipe and check valve condition
- Manhole cover, flange distortion check, and flange stud welds
- Suction and discharge piping condition
- Ladder condition
- Fastener material and condition
- Pit measurements
- Ultrasonic thickness (UT) measurements

NOTE

Depending on the tank conditions, it may not be necessary to perform all the pit measurements and ultrasonic measurements indicated on Table 1.

3.7.1 Pit measurement. The Contractor must measure all pits within each tank/location listed in Table 1, in accordance with SFLC Std Spec 0740, Paragraph 3.13 (Evaluation of pitting corrosion). The results of these measurements must be included in the inspection report, showing where pit measurements were taken and the depth of the pit. For bidding purposes, use Table 1 for number of pit measurements per tank.

3.7.2 Ultrasonic thickness (UT) measurement. Ultrasonic thickness (UT) measurement. The Contractor must take UT measurements in the surrounding area of any pit measuring greater than 25% of plate thickness. UT measurements must be taken in the four quadrants at an equal-distant radius from the pit center until full plate thickness is measured. UT measurements must be conducted in accordance with SFLC Std Spec 0740, Appendix C, using Coast Guard Drawings listed in Section 2. The results of these measurements (original thickness, measured thickness, and any observed cracks) and the locations where they were taken must be included in the inspection report. For bidding purposes, use Table 1 for number of UT measurements per tank.

3.8 Substrate fairing and repair by filling Epoxy for shallow pits and small corrosions (i.e. pits < 25% or corrosions < 25%). The Contractor must repair small pin holes, shallow pitted substrates (with remaining plate thicknesses over 75% of required plate thicknesses), and fair corroded substrates (with remaining cross sections over 75% of required cross section areas), after removing coating, in accordance with SFLC Std Spec 6310 and manufacturers' instructions.

- For bidding purposes, procure the number of epoxy fairing kit(s) (0.5 Gallon/5 Kg Kit) as shown in Table 1.
- Epoxy fairing compound must meet the requirements of SFLC Std Spec 6310 Appendix C (MIL-PRF-24176 Cement, Epoxy, Metal Repair & Hull Smoothing) and be compatible with fluid in the tank.
- Turn over all unused kits to the COR.

NOTE

"Substrate fairing and repair by filling Epoxy for shallow pits and corrosions (i.e. pits < 25% or corrosions < 25%)" is a supplement barrier intending to help delay penetration.

3.9 Disinfection Preparations. In preparation for disinfecting the potable water tank, the Contractor must accomplish the following tasks:

3.9.1 The Contractor must notify the COR of their intention to disinfect the tank 5 days ahead of time.

3.9.2 Upon completion of all inspections, repairs, coatings and cure times, the Contractor must leave the tank open for 24 hours.

3.9.3 Once 24 hours have elapsed, the Contractor must remove all installed temporary plugs and document removal via signature on the plug log by the Coast Guard Inspector and Contractor prior to tank closing. Submit a CFR with the completed plug log.

3.9.4 Conduct a final inspection in the presence of a Coast Guard Inspector to ensure that no foreign objects or plugs have been left in the tank. Submit a CFR documenting this final inspection.

3.9.5 Ensure that no foreign objects enter the tank between the final inspection and the tank disinfection.

3.10 Tank disinfecting. The Contractor must disinfect the affected potable water tank(s) and associated disturbed piping and components, as necessary, in accordance with NAVMED P-5010-6.

- Any of the three methods of chlorination are acceptable.
- Refill the tanks with potable water upon completion of disinfection and flushing process.
- Remove and dispose of disinfection fluids and flushing water in accordance with all applicable federal, state, and local environmental regulations.
- Ensure that no one enters the tanks once disinfection is completed.

3.10.1 Tank closing. Immediately after adding the disinfectant, the Contractor must close the tank manhole cover(s) using new gasket material in accordance with Coast Guard Drawing 750-WMSL-167-001. Chase threads on studs to ensure an even installation of the access covers. Renew all nuts, washers, and cotton grommets (including those that are missing) in accordance with Coast Guard Drawing 750-WMSL-167-001. Covers must be reinstalled in their proper orientation with the marks made during tank opening. Do not use power tools to tighten the manhole cover hardware.

NOTE

Coast Guard personnel will operate all shipboard machinery and equipment.

3.11 Operational test, post repairs. After completion of work, the Contractor must witness Coast Guard personnel demonstrate operational test of all items or shipboard devices that have been disturbed, used, repaired, altered, or installed to be in satisfactory operating condition. Submit a CFR.

- Test each tank TLIs to demonstrate that each radar head/sensor is functional (i.e., Digital readout is displayed)
- Ensure that there is interface/communication between the TLI sensor and the Machinery Control and Monitoring System (i.e. Digital readout at the TLI is identical to that displayed)

- Potable Water Pumps
- Leak check of manhole covers

3.12 Water quality verification. The Contractor must conduct halogen residual, pH, and bacteriological testing of the water system for consumption at the point-of-use (sinks, water fountains, etc) and have the ship's Health Services Technician, Medical Liaison, or Marine Chemist verify that the potable water meets all USCG requirements per CGTTP 4-11.10B and COMDTINST M5100.47 Chapter 25. The Contractor must clean the tanks until the water passes these tests. Submit CFR.

3.13 Touch-up preservation. The Contractor must prepare and coat each tank in Table 1 in accordance with SFLC Std Spec 6310, Paragraph 1.3 (Touch-up) and 3.1.13 (Touch-ups and minor coating repairs). This includes all disturbed manhole cover external surfaces. Do not paint manhole cover fasteners.

4. NOTES

This section is not applicable to this work item.

WORK ITEM 6: Tanks (MP Fuel Service), Clean and Inspect

1. SCOPE

1.1 Intent. This work item describes the requirements for the Contractor to clean and inspect the following tank(s):

TABLE 1 – LIST OF TANKS

TYPE OF TANK	LOCATION	CAPACITY - 95% (GALLONS)	TANK CONTENT DISPOSAL (GALLONS)	PAINTED	*REQUIRED MEASUREMENT OF PITS/UT FAIRING COMPOUND KITS
Fuel Oil Service	4-64-1-F	9,698	500	N	Pits - 50 UT - 200 Fairing Compound – 1
Fuel Oil Service	4-64-2-F	9,698	500	N	Pits - 50 UT - 200 Fairing Compound – 1

*** For Bidding Purposes**

1.2 Government-furnished property.

None.

2. REFERENCES

COAST GUARD DRAWINGS

Coast Guard Drawing 418A-WMSL-801-001, Rev B, Booklet of General Plans

Coast Guard Drawing 750-WMSL-100-036, Rev P, Unit 3110 Structure 1st Platform and Below Frs 65-77 (ASC100311)

Coast Guard Drawing 750-WMSL-167-001, Rev K, Manhole List Installation and Fabrication Details Ship Wide (ASC167001)

COAST GUARD PUBLICATIONS

Surface Forces Logistics Center Standard Specification 0000 (SFLC Std Spec 0000), 2022, General Requirements

Surface Forces Logistics Center Standard Specification 0740 (SFLC Std Spec 0740), 2022, Welding and Allied Processes

Surface Forces Logistics Center Standard Specification 6310 (SFLC Std Spec 6310), 2022, Requirements for Preservation of Ship Structures

OTHER REFERENCES

None.

3. REQUIREMENTS

3.1 General.

3.1.1 CIR.

None.

3.1.2 Tech Rep. The contractor must provide the services of a certified Technical Representative, holding an ASNT Central Certification Program (ACCP) Level II certification or better, or SNT-TC-TA NDT Level II or better to accomplish the following on site:

- Accomplish the applicable requirements in SFLC Std Spec 0740 Appendix C, Nondestructive Examination (Ultrasonic Inspection).

3.1.3 Protective measures. The Contractor must furnish and install all protective measures in accordance with SFLC Std Spec 0000, paragraph 3.3.3 (Vessel component, space, and equipment protection).

3.1.4 Interferences. The Contractor must handle all interferences in accordance with SFLC Std Spec 0000, paragraph 3.3.5 (Interferences). Known interferences include, but are not limited to the following:

- TLIs
- Piping
- Residual tank contents/fluids

NOTE

Coast Guard personnel will operate all shipboard machinery and equipment.

3.2 Operational test, initial. Prior to commencement of work, the Contractor must witness Coast Guard personnel perform an initial operational test of all items or shipboard devices to be disturbed, used, repaired, or altered, to demonstrate existing operational condition. Submit a CFR.

3.2.1 Perform an initial operational test of each tank TLIs to demonstrate that each radar head/sensor is functional (i.e., Digital readout is displayed).

3.2.2 Ensure that there is interface/communication between the TLI sensor and the Machinery Control and Monitoring System (i.e. Digital readout at the TLI is identical to that displayed).

3.3 Tank opening. The Contractor must remove the tank manhole cover(s) and ventilate the confined spaces in accordance with SFLC Std Spec 0000, Paragraphs 3.3.1.1 and 3.3.1.2. The Contractor must provide fall protection to cover tank manhole cover when opened for ventilation/work. The Contractor must matchmark the manhole cover lid(s) to the flange prior to removal for proper reinstallation.

WARNING

Do not use the Fuel Service or Transfer systems to drain the water from the tank. Excessive fuel contamination will result.

3.4 Tank content and waste disposal. The Contractor must dispose of residual tank contents listed in Table 1 and any cleaning fluids in compliance with all applicable Federal, state, and local laws, ordinances and regulations. Notify the COR (in writing) at least 48 hours prior to removal of wastes and fluids. Document a complete chain of custody record of the removed tank contents and generated wastes, from the vessel to the point of final destination or delivery. Submit chain of custody record to the COR upon completion of work.

3.5 Temporary plugs. The Contractor must plug all inlet and outlet piping in the tank to prevent contaminants from entering the tank or piping system for the entire duration of the tank cleaning and inspection. Use plugs with an attached lanyard, ring or other system that will ensure plugs are not lost in the pipe openings.

3.5.1 Plug log. The Contractor must keep a written record of all installed plugs. Keep a separate list for each tank. Maintain a plug accountability log posted immediately outside the tank to prevent any of the installed temporary plugs from being lost inside the tank or left behind inside at tank closure. The log must include the type and size of each plug, installation date, and removal date. Submit this log to the COR after completion of work item via a CFR.

3.5.2 The Contractor must ensure that all plugs are removed from each tank upon completion of work in the tank.

3.6 Tank cleaning. The Contractor must clean all designated tank interior surfaces free of all foreign materials, such as residual fuel or water, sediment, sludge, rust, or biological growth, taking care not to damage the coating system (if applicable).

3.6.1 The Contractor must accomplish all requirements of SFLC Std Spec 6310, 3.1.6.4 (Surface contaminant removal) to achieve the cleanliness requirements of SSPC-SP 1, including a low-pressure (maximum 5,000 psi) fresh water wash down of the surfaces.

3.6.2 Remove cleaning media and residues continuously from the tank during the washing process. Remove any residual wash media and wipe up residual moisture with clean lint-free cloths. Wipe the interior tank structure dry and free of all cleaning agents.

3.7 Inspection. The Contractor, in the presence of the CG Inspector, must inspect all tank interior surfaces, including, but not limited to bulkheads, floor and overhead plating, structural members, manhole cover surfaces, fasteners and gasket seating surfaces. Using the Tank and Void Assessment form in General Requirements section 4.2, submit a CIR including the following, as applicable:

- Tank structural condition
- Condition of tank coating, including dimensions, percentage, location, and type of coating failure
- Tank level indicator (TLI) and/or float switch condition
- Sounding tube and striker plate condition
- Vent pipe and check valve condition
- Manhole cover, flange distortion check, and flange stud welds

- Suction and discharge piping condition
- Ladder condition
- Fastener material and condition
- Pit measurements
- Ultrasonic thickness (UT) measurements

NOTE

Depending on the tank conditions, it may not be necessary to perform all the pit measurements and ultrasonic measurements indicated on Table 1.

3.7.1 Pit measurement. The Contractor must measure all pits within each tank/location listed in Table 1, in accordance with SFLC Std Spec 0740, Paragraph 3.13 (Evaluation of pitting corrosion). The results of these measurements must be included in the inspection report, showing where pit measurements were taken and the depth of the pit. For bidding purposes, use Table 1 for number of pit measurements per tank.

3.7.2 Ultrasonic thickness (UT) measurement. Ultrasonic thickness (UT) measurement. The Contractor must take UT measurements in the surrounding area of any pit measuring greater than 25% of plate thickness. UT measurements must be taken in the four quadrants at an equal-distant radius from the pit center until full plate thickness is measured. UT measurements must be conducted in accordance with SFLC Std Spec 0740, Appendix C, using Coast Guard Drawings listed in Section 2. The results of these measurements (original thickness, measured thickness, and any observed cracks) and the locations where they were taken must be included in the inspection report. For bidding purposes, use Table 1 for number of UT measurements per tank.

3.8 Substrate fairing and repair by filling Epoxy for shallow pits and small corrosions (i.e. pits < 25% or corrosions < 25%). The Contractor must repair small pin holes, shallow pitted substrates (with remaining plate thicknesses over 75% of required plate thicknesses), and fair corroded substrates (with remaining cross sections over 75% of required cross section areas), after removing coating, in accordance with SFLC Std Spec 6310 and manufacturers' instructions.

- For bidding purposes, procure the number of epoxy fairing kit(s) (0.5 Gallon/5 Kg Kit) as shown in Table 1.
- Epoxy fairing compound must meet the requirements of SFLC Std Spec 6310 Appendix C (MIL-PRF-24176 Cement, Epoxy, Metal Repair & Hull Smoothing) and be compatible with fluid in the tank.
- Turn over all unused kits to the COR.

NOTE

"Substrate fairing and repair by filling Epoxy for shallow pits and corrosions (i.e. pits < 25% or corrosions < 25%)" is a supplement barrier intending to help delay penetration.

3.9 Manhole Preservation. The contractor must preserve these items for tanks 4-64-1-F and 4-64-2-F only. These manholes are recessed approximately 4" below the deck.

- Manhole Cover
- Manhole Flange
- Manhole Coaming from flange to the deck edge (approximately 4" high)

3.9.1 The manhole cover must be preserved in accordance with SFLC Std Spec 6310 Appendix B for Bilges, Cofferdams, and Forepeaks. This requires surface preparation to SP-10. Color to match adjacent deck surface.

3.9.1.1 All surfaces of the manhole cover must be preserved except where the cover is exposed to the inside of the fuel tank. Follow paragraph 3.10 for preservation of non-coated surfaces.

3.9.2 The manhole flange and coaming must be preserved in accordance with SFLC Std Spec 6310 Appendix B for Bilges, Cofferdams, and Forepeaks. SP-11 surface preparation is authorized in lieu of SP-10 for the manhole coaming and flange.

3.10 Surface coating. For all non-painted tanks, the Contractor must apply a coat of system fluid to all tank interior surfaces, following final tank inspection and just prior to tank closing. If surface rust developed on the interior tank surfaces while the tank was open, the Contractor must wipe the surfaces clean to a condition free of surface rust prior to coating with system fluid.

NOTE

Minimizing the amount of time the tanks are left open will reduce the surface rust that accumulates on tank interior surfaces.

3.11 Tank closing. The Contractor must ensure that the tank(s) remain open for approximately 24 hours after completion of any authorized repair and preservation procedures. Notify the COR at least 48 hours prior to closing the tank(s). After satisfactory inspection by the Coast Guard Inspector and completion of all authorized repairs, remove all installed temporary plugs and document removal via signature on the plug log by the Coast Guard Inspector and Contractor prior to tank closing. Close tank manhole cover(s) using new gasket material in accordance with Coast Guard Drawing 750-WMSL-167-001, in the presence of the Coast Guard Inspector. Chase threads on studs to ensure even installation of the access covers. Renew all nuts, washers, and grommets (including those that are missing) in accordance with Coast Guard Drawing 750-WMSL-167-001. Covers must be reinstalled in their proper orientation with the marks made during tank opening. Do not use power tools to secure the manhole covers. Submit a CFR with the completed plug log.

NOTE

Coast Guard personnel will operate all shipboard machinery and equipment.

3.12 Operational test, post repairs. After completion of work, the Contractor must witness Coast Guard personnel demonstrate operational test of all items or shipboard devices that have been disturbed, used, repaired, altered, or installed to be in satisfactory operating condition. Submit a CFR.

3.12.1 Perform a post-work operational test of each tank TLIs to demonstrate that each radar head/sensor is functional (i.e., Digital readout is displayed).

3.12.2 Ensure that there is interface/communication between the TLI sensor and the Machinery Control and Monitoring System (i.e. Digital readout at the TLI is identical to that displayed).

3.13 Touch-up preservation. The Contractor must prepare and coat each tank in Table 1 in accordance with SFLC Std Spec 6310, Paragraph 1.3 (Touch-up) and 3.1.13 (Touch-ups and minor coating repairs). This includes all disturbed manhole cover external surfaces. Do not paint manhole cover fasteners.

4. NOTES

This section is not applicable to this work item.

WORK ITEM 7: Tanks (MP Fuel Storage and Overflow), Clean and Inspect

1. SCOPE

1.1 Intent. This work item describes the requirements for the Contractor to clean and inspect the following tank(s):

TABLE 1 – LIST OF TANKS

TYPE OF TANK	LOCATION	CAPACITY - 95% (GALLONS)	TANK CONTENT DISPOSAL (GALLONS)	PAINTED	*REQUIRED MEASUREMENT OF PITS/UT FAIRING COMPOUND KITS
Fuel Oil Storage	5-36-0-F	8,698	500	N	Pits - 50 UT - 200 Fairing Compound – 1
Fuel Oil Storage	5-52-0-F	13,869	700	N	Pits - 75 UT - 300 Fairing Compound – 1
Contaminated Fuel Oil Settling	3-50-2-F	3,151	200	Y	Pits - 50 UT - 200 Fairing Compound – 1/2
Fuel Oil Storage	5-28-0-F	62,777	3,300	N	Pits - 150 UT - 600 Fairing Compound – 2
Fuel Oil Storage	5-80-0-F	9,202	500	N	Pits – 75 UT - 300 Fairing Compound – 1

*** For Bidding Purposes**

1.2 Government-furnished property.

None.

2. REFERENCES

COAST GUARD DRAWINGS

Coast Guard Drawing 418A-WMSL-801-001, Rev B, Booklet of General Plans

Coast Guard Drawing 750-WMSL-100-017, Rev L, Unit 1310 Structure – Inner Bottom to 1st Platform – Fr 22 to Fr 35 (ASC100131)

Coast Guard Drawing 750-WMSL-100-021, Rev F, Unit 2100 Structure – Inner Bottom – Fr 35 to Fr 44 (ASC100210)

Coast Guard Drawing 750-WMSL-100-028, Rev J, Unit 2220 Structure – 1st Platf to 2nd Deck – Fr 44 to Fr 52 (ASC100222)

Coast Guard Drawing 750-WMSL-100-040, Rev N, Unit 3210 Structure – Inner Bot To 1st Platform – Fr 76 To Fr 88 (ASC100321)

Coast Guard Drawing 750-WMSL-167-001, Rev K, Manhole List Installation and Fabrication Details Ship Wide (ASC167001)

COAST GUARD PUBLICATIONS

Surface Forces Logistics Center Standard Specification 0000 (SFLC Std Spec 0000), 2022, General Requirements

Surface Forces Logistics Center Standard Specification 0740 (SFLC Std Spec 0740), 2022, Welding and Allied Processes

Surface Forces Logistics Center Standard Specification 6310 (SFLC Std Spec 6310), 2022, Requirements for Preservation of Ship Structures

OTHER REFERENCES

None.

3. REQUIREMENTS

3.1 General.

3.1.1 CIR. The Contractor must submit a CIR for the inspections listed in the following paragraph(s):

- 3.7 Inspection

3.1.2 Tech Rep. The contractor must provide the services of a certified Technical Representative, holding an ASNT Central Certification Program (ACCP) Level II certification or better, or SNT-TC-TA NDT Level II or better to accomplish the following on site:

- Accomplish the applicable requirements in SFLC Std Spec 0740 Appendix C, Nondestructive Examination (Ultrasonic Inspection).

3.1.3 Protective measures. The Contractor must furnish and install all protective measures in accordance with SFLC Std Spec 0000, paragraph 3.3.3 (Vessel component, space, and equipment protection).

3.1.4 Interferences. The Contractor must handle all interferences in accordance with SFLC Std Spec 0000, paragraph 3.3.5 (Interferences). Known interferences include, but are not limited to the following:

- TLIs
- Piping
- Residual tank contents/fluids

NOTE
Coast Guard personnel will operate all shipboard machinery and equipment.

3.2 Operational test, initial. Prior to commencement of work, the Contractor must witness Coast Guard personnel perform an initial operational test of all items or shipboard devices to be disturbed, used, repaired, or altered, to demonstrate existing operational condition. Submit a CFR.

3.2.1 Perform an initial operational test of each tank TLIs to demonstrate that each radar head/sensor is functional (i.e., Digital readout is displayed).

3.2.2 Ensure that there is interface/communication between the TLI sensor and the Machinery Control and Monitoring System (i.e. Digital readout at the TLI is identical to that displayed).

3.3 Tank opening. The Contractor must remove the tank manhole cover(s) and ventilate the confined spaces in accordance with SFLC Std Spec 0000, Paragraphs 3.3.1.1 and 3.3.1.2. The Contractor must provide fall protection to tank manhole cover when opened for ventilation/work. The Contractor must matchmark the manhole cover lid(s) to the flange prior to removal for proper reinstallation.

WARNING

Do not use the Fuel Service or Transfer systems to drain any water from the tank. Excessive fuel contamination will result.

3.4 Tank content and waste disposal. The Contractor must dispose of residual tank contents listed in Table 1 and any cleaning fluids in compliance with all applicable Federal, state, and local laws, ordinances and regulations. Notify the COR (in writing) at least 48 hours prior to removal of wastes and fluids. Document a complete chain of custody record of the removed tank contents and generated wastes, from the vessel to the point of final destination or delivery. Submit chain of custody record to the COR upon completion of work.

3.5 Temporary plugs. The Contractor must plug all inlet and outlet piping in the tank to prevent contaminants from entering the tank or piping system for the entire duration of the tank cleaning and inspection. Use plugs with an attached lanyard, ring or other system that will ensure plugs are not lost in the pipe openings.

3.5.1 Plug log. The Contractor must keep a written record of all installed plugs. Keep a separate list for each tank. Maintain a plug accountability log posted immediately outside the tank to prevent any of the installed temporary plugs from being lost inside the tank or left behind inside at tank closure. The log must include the type and size of each plug, installation date, and removal date. Submit this log to the COR after completion of work item via a CFR.

3.5.2 The Contractor must ensure that all plugs are removed from each tank upon completion of work in the tank.

3.6 Tank cleaning. The Contractor must clean all designated tank interior surfaces free of all foreign materials, such as residual fuel or water, sediment, sludge, rust, or biological growth, taking care not to damage the coating system (if applicable).

3.6.1 The Contractor must accomplish all requirements of SFLC Std Spec 6310, 3.1.6.4 (Surface contaminant removal) to achieve the cleanliness requirements of SSPC-SP 1, including a low-pressure (maximum 5,000 psi) fresh water wash down of the surfaces.

3.6.2 Remove cleaning media and residues continuously from the tank during the washing process. Remove any residual wash media and wipe up residual moisture with clean lint-free cloths. Wipe the interior tank structure dry and free of all cleaning agents.

3.7 Inspection. The Contractor, in the presence of the CG Inspector, must inspect all tank interior surfaces, including, but not limited to bulkheads, floor and overhead plating, structural members, manhole cover surfaces, fasteners and gasket seating surfaces. Using the Tank and Void Assessment form in General Requirements section 4.2, submit a CIR including the following, as applicable:

- Tank structural condition
- Condition of tank coating, including dimensions, percentage, location, and type of coating failure
- Tank level indicator (TLI) and/or float switch condition
- Sounding tube and striker plate condition
- Vent pipe and check valve condition
- Manhole cover, flange distortion check, and flange stud welds
- Suction and discharge piping condition
- Ladder condition
- Fastener material and condition
- Zinc anode condition, if applicable (remaining percentage,)
- Pit measurements
- Ultrasonic thickness (UT) measurements

NOTE

Depending on the tank conditions, it may not be necessary to perform all the pit measurements and ultrasonic measurements indicated on Table 1.

3.7.1 Pit measurement. The Contractor must measure all pits within each tank/location listed in Table 1, in accordance with SFLC Std Spec 0740, Paragraph 3.13 (Evaluation of pitting corrosion). The results of these measurements must be included in the inspection report, showing where pit measurements were taken and the depth of the pit. For bidding purposes, use Table 1 for number of pit measurements per tank.

3.7.2 Ultrasonic thickness (UT) measurement. Ultrasonic thickness (UT) measurement. The Contractor must take UT measurements in the surrounding area of any pit measuring greater than 25% of plate thickness. UT measurements must be taken in the four quadrants at an equal-distant radius from the pit center until full plate thickness is measured. UT measurements must be conducted in accordance with SFLC Std Spec 0740, Appendix C, using Coast Guard Drawings listed in Section 2. The results of these measurements (original thickness, measured thickness, and any observed cracks) and the locations where they were taken must be included in the inspection report. For bidding purposes, use Table 1 for number of UT measurements per tank.

3.8 Substrate fairing and repair by filling Epoxy for shallow pits and small corrosions (i.e. pits < 25% or corrosions < 25%). The Contractor must repair small pin holes, shallow pitted substrates (with remaining plate thicknesses over 75% of required plate thicknesses), and fair corroded substrates (with remaining cross sections over 75% of required cross section areas), after removing coating, in accordance with SFLC Std Spec 6310 and manufacturers' instructions.

- For bidding purposes, procure the number of epoxy fairing kit(s) (0.5 Gallon/5 Kg Kit) as shown in Table 1.
- Epoxy fairing compound must meet the requirements of SFLC Std Spec 6310 Appendix C (MIL-PRF-24176 Cement, Epoxy, Metal Repair & Hull Smoothing) and be compatible with fluid in the tank.
- Turn over all unused kits to the COR.

NOTE

"Substrate fairing and repair by filling Epoxy for shallow pits and corrosions (i.e. pits < 25% or corrosions < 25%)" is a supplement barrier intending to help delay penetration.

3.9 Surface coating. For all non-painted tanks, the Contractor must apply a coat of system fluid to all tank interior surfaces, following final tank inspection and just prior to tank closing. If surface rust developed on the interior tank surfaces while the tank was open, the Contractor must wipe the surfaces clean to a condition free of surface rust prior to coating with system fluid.

NOTE

Minimizing the amount of time the tanks are left open will reduce the surface rust that accumulates on tank interior surfaces.

3.10 Tank closing. The Contractor must ensure that the tank(s) remain open for approximately 24 hours after completion of any authorized repair and preservation procedures. Notify the COR at least 48 hours prior to closing the tank(s). After satisfactory inspection by the Coast Guard Inspector and completion of all authorized repairs, remove all installed temporary plugs and document removal via signature on the plug log by the Coast Guard Inspector and Contractor prior to tank closing. Close tank manhole cover(s) using new gasket material, nuts, washers and grommets in accordance with Coast Guard Drawing 750-WMSL-167-001, in the presence of the Coast Guard Inspector. Chase threads on studs to ensure even installation of the access covers. Covers must be reinstalled in their proper orientation with the marks made during tank opening. Do not use power tools to secure the manhole covers. Submit a CFR with the completed plug log.

NOTE

Coast Guard personnel will operate all shipboard machinery and equipment.

3.11 Operational test, post repairs. After completion of work, the Contractor must witness Coast Guard personnel demonstrate operational test of all items or shipboard devices that have been disturbed, used, repaired, altered, or installed to be in satisfactory operating condition. Submit a CFR.

3.11.1 Perform a post-work operational test of each tank TLIs to demonstrate that each radar head/sensor is functional (i.e., Digital readout is displayed).

3.11.2 Ensure that there is interface/communication between the TLI sensor and the Machinery Control and Monitoring System (i.e. Digital readout at the TLI is identical to that displayed).

3.12 Touch-up preservation. The Contractor must prepare and coat each tank in Table 1 in accordance with SFLC Std Spec 6310, Paragraph 1.3 (Touch-up) and 3.1.13 (Touch-ups and minor coating repairs). This includes all disturbed manhole cover external surfaces. Do not paint manhole cover fasteners.

4. NOTES

This section is not applicable to this work item.

WORK ITEM 8: Refrigeration Plant, System Groom

1. SCOPE

1.1 Intent. This work item describes the requirements for the Contractor to inspect and groom each of the ship's two (2) refrigeration plants.

TABLE 1 – REFRIGERATION PLANT NAME PLATE DATA

COMPRESSOR	COMPRESSOR MOTOR	CONDENSER
Manufacturer: Bitzer for York International	Manufacturer: A.O.Smith	Manufacturer: Ketema
Type: Semi-Hermetic Screw	Part No.: 625272-005	Part No: MHX-605D-2P Type: Shell and Tube
Model: HSN5353-25-40P	Voltage: 440 VAC	Shell Dia: 6 inch
Displacement: 71 cfm	60Hz	Shell Length: 72 inch
Oil Charge: BSE 170 Oil "L" (Polyol-Ester) Oil Quantity: 30 liters/separator DO NOT USE MINERAL OIL. Oil Separator: two (2), Bitzer PN OA1854; YORK PN 026-41965-000	Full Load Amps: 98	Water Pass: 2 pass

1.2 Government-furnished property.

MTI	ITEM DESCRIPTION	NSN/PN	QTY	ESTIMATED COST ($/UNIT)
N	-3/8" Henry Seal Cap Valve (Main Valve P/N: 2031) Bonnet, Stem & Seat Disc Assembly	PN: 8-059-008	2	$184.16
N	1-5/8" Henry Seal Cap Valve (Main Valve PN: 2032), Bonnet, Stem & Seat Disc Assembly	PN: 8-059-010	3	$233.44
N	2-1/8" Henry Seal Cap Valve (Main Valve PN: 2033), Bonnet, Stem & Seat Disc Assembly	PN: 8-059-012	2	$440.57

N	Henry "Y" Strainer Assembly (Main Assembly P/N: 896A-5/8S)	PN: 5-010-003 (Screen) PN: 5-023-100 (Gasket) PN: 2-023-080 (O-Ring)	6	
N	Sea Water Regulating Valve (Condenser). Metrex Valve Corp lead time is usually 6-8 weeks.	PN: M900P-125-LRFL2-3W	2	$2,552.00
N	Sea Water Regulating Valve (Oil Cooler). Metrex Valve Corp lead time is usually 3-4 weeks	PN: DA-868T-75-SE-M	2	$1,740.00
N	Disk, Rupturable	NSN: 4820-01-366-7330 PN: 026-31284-000	6	$2,274.06
N	Connector, Flexible, Liquid	NSN: 4730-01-561-7408 PN: 026-41967-000	2	$3,196.17
N	Connector, Flexible, Vapor	NSN: 5935-01-561-7463 PN: 026-41968-000	2	$5,303.11
N	Valve, Pressure Relief	NSN:4820-01-561-6471 PN:022-11355-000	6	$352.12

2. REFERENCES

COAST GUARD DRAWINGS

Coast Guard Drawing 418A-WMSL-100-001, Rev B, General Arrangements

Coast Guard Drawing 418A-WMSL-801-001 Rev A, Booklet of General Plan

Coast Guard Drawing 750-WMSL-508-001, Rev C, Piping and Machinery Insulation Schedule and L/M

Coast Guard Drawing 750-WMSL-516-001, Rev E, A/C & Refrigeration Piping Diagram

Coast Guard Drawing 750-WMSL-520-001, Rev H, Seawater Cooling System Diagram

Coast Guard Drawing 750-WMSL-520-004, Rev E, Salt Water Cooling Unit 1320

Coast Guard Drawing 750-WMSL-520-005, Rev E, Salt Water Cooling System Unit 2110

Coast Guard Drawing 750-WMSL-520-008, Rev F, Salt Water Cooling Unit 2210

COAST GUARD PUBLICATIONS

Coast Guard Technical Publication (TP) 7168, January 2022, 3.2-ton Refrigeration Ships Store Plant

Surface Forces Logistics Center Standard Specification 0000 (SFLC Std Spec 0000), 2022, General Requirements

Surface Forces Logistics Center Standard Specification 6310 (SFLC Std Spec 6310), 2022, Requirements for Preservation of Ship Structures

OTHER REFERENCES

None

3. REQUIREMENTS

3.1 General.

3.1.1 CIR The Contractor must submit a CIR for the inspections listed in the following paragraph(s):

- 3.3.5.1 Compressor Oil Inspection

3.1.2 Tech Rep. The Contractor must provide the services of a Qualified Technical Representative who is familiar with the York Marinepak Refrigeration system to accomplish the following on site:

- Advise on manufacturer's proprietary system information.
- Ensure compliance with manufacturer's procedures and standards during system disassembly, inspection, and reassembly as applicable.

3.1.2.1 Ensure the Tech Rep has experience with the system/equipment stated above and demonstrated on their résumé with the York Marinepak Refrigeration Systems on the WMSL Class cutters.

3.1.2.2 Submit the name and résumé of the Tech Rep to the COR at the Arrival Conference.

3.1.3 Protective measures - general. The Contractor must furnish and install all protective measures in accordance with SFLC Std Spec 0000, paragraph 3.3.3 (Vessel component, space, and equipment protection).

3.1.4 Interferences. The Contractor must handle all interferences in accordance with SFLC Std Spec 0000, paragraph 3.3.5 (Interferences). Known interferences include, but are not limited to the below-listed:

- Piping
- Insulation
- Electrical Cables

3.1.5 Refrigerated and Frozen Storage. If the refrigeration system is taken out of service for more than two hours, then the Contractor must provide refrigerated and frozen storage in accordance with paragraph 3.3.14 of SFLC Standard Spec 8635 to the pier adjacent to the cutter for the duration of this work.

3.1.5.1 Disregard the size of the storage facility for refrigerated stores shown in Table 7 of SFLC Std Spec 8635. The Contractor must provide 800 cubic feet of frozen food storage and 800 cubic feet of refrigerated storage.

3.1.5.2 The Coast Guard will NOT provide any power to the contractor to run the temporary refrigerated/frozen stores equipment.

3.1.6. Work plan. The Contractor must complete any other work on the refrigeration system after the initial operating test and before the final operating test herein.

3.1.7 Work coordination. The Contractor must coordinate the accomplishment of this work item with the following work items :

- Refrigeration Plant Flexible Hoses, Renew

NOTE

Coast Guard personnel will operate all shipboard machinery and equipment.

3.2 General work guidance. The Contractor must follow the general guidance given in the paragraphs below.

3.2.1 Refrigeration handling. The Contractor must provide the COR documentation that ensures all prime and sub contractors servicing HFC refrigerant-based Air Conditioning and Refrigeration (AC&R) equipment hold a current Environmental Protection Agency (EPA) Technician Certification, Type IV (Universal Certification), and meet all state and local regulations and licensing requirements.

3.2.2 Refrigerant draining and recovery. The Contractor must ensure AC unit refrigerant is recovered and disposed of into a container in accordance with all federal, state and local environmental regulations.

3.2.3. Equipment locations are shown on CG Drawing 750-WMSL-801-1 in the Reefer Machinery Room (2-64-0-E)

3.3 Refrigeration plant inspect and groom. The Contractor must perform the following work on each of the two (2) refrigeration plants:

3.3.1 Initial Operational Test and Data Collection. The Contractor must witness Coast Guard personnel perform an initial operational test of all items or shipboard devices to be disturbed, used, repaired, or altered, to demonstrate existing operational condition. Submit a CFR.

3.3.1.1 When testing the refrigeration plant, record operating data per Paragraph 5.7, “Checking operating data,” Section 7 of TP 7168. Document issues with the system under the direction of a Coast Guard Inspector and submit a CFR.

3.3.1.2. The Contractor must record the ASW pressure upstream and downstream of the condenser to ensure flow.

3.3.2 Leak Test. The contractor must conduct a refrigerant leak test in the presence of Coast Guard Inspector in accordance with procedures shown in "Leak Test following Installation or Major Repairs” in the “Corrective Maintenance” portion of Section 19, TP 7168 .

3.3.3 Visual Survey. Accompanied by the Coast Guard Inspector, the Contractor must conduct a visual survey of each of the two (2) refrigeration plants. Inspect the foundation fasteners for the unit in accordance with Section 19, Inspecting Foundation Bolts of TP 7168. Submit a CFR noting any unusual conditions and recommending any repairs.

3.3.4 Refrigerant Recovery. The Contractor must pump down each plant to the receiver.

3.3.4.1 Prior to disposal, the Contractor must test the oil for acid and check for Air/Non-Condensable in the recovery bottle. CG Inspector must be present to verify Pressure/Temperature Relationship on recovery cylinders after recovery cylinders have settled for a minimum of 24 hours. Submit a CFR.

3.3.4.2. Weigh the total amount of refrigerant in each system and submit a CFR.

3.3.4.3 The Contractor must dispose of recovered refrigerant in their own containers in accordance with Federal, state, and local regulations and SFLC Std Spec 0000.

3.3.5 Compressor Oil. The Contractor must conduct the following maintenance on the compressor oil system.

3.3.5.1 The Contractor must check compressor oil in accordance with Tech Pub 7168, Section 19, CHECKING COMPRESSOR OPERATION, Step 5. Provide a sample to Coast Guard Inspector for further analysis. Submit a CIR with results.

3.3.5.2 Change the compressor oil in the refrigeration plants as shown in PC 34, Drawing 077-18147-001 in Section 21 of TP 7168. The Contractor must provide new oil.

3.3.5.3 The Contractor must provide and install new oil filters when replacing the compressor oil. Oil filters are Bitzer, Part No. 362204-01, qty. one (1) per plant.

3.3.5.4 The Contractor must test the oil separator heater discussed in Paragraph 5.2, Section 8 of TP 7168. Submit a CFR.

3.3.5.5 The Contractor must clean the Oil Cooler in accordance with Paragraph 6.2 “Maintenance” in Section 10 of TP 7168.

3.3.5.6 The Contractor must inspect and test the oil heater (PC 41, Drawing 077-18147-002 in Section 21 of TP 7168) and its associated thermostat for proper operation.

3.3.6 Valve Maintenance. The Contractor must conduct the following valve maintenance on the system:

3.3.6.1 Overhaul valves that can be overhauled in place, including but not limited to the Liquid Line Solenoid Valves, Suction Isolation Valves, Liquid Line Isolation Valves, Unit Cooler Isolation Valves, Dehydrator Isolation Valves. Certain valves (listed below) will require special attention. Submit a CFR documenting the parts that were replaced in each overhauled valve.

3.3.6.2 If a valve cannot be overhauled in place, the Contractor must conduct a leak check on that valve, and document the results via a CFR.

3.3.6.3 The Contractor must renew relief valves on the condenser, receiver and oil separator. See Note 15, Drawing 077-16954-000 in Section 21 and York Marine Systems Drawing 035-20947-000 REV D in Section 18 of TP 7168.

3.3.6.4 The Contractor must overhaul solenoid valves Sporlan Model MBI4S2 qty eight (8) in accordance with Drawing Number 077-18147-001, which can be found in Section 21 of TP 7168.

3.3.6.5 The Contractor must restore the thermal expansion (PC 21) valve to factory settings, clean and replace gaskets for the associated refrigerant strainer (PC 24) of York Drawing 077-18147-001 in Section 21 of TP 7168.

3.3.6.6 The Contractor must inspect the rupture disks per Section 3 of TP 7168, and replace if necessary Submit a CFR.

3.3.6.7 Inspect, and if defective rebuild, overhaul and/or replace Condenser and Oil Cooler Sea Water Regulating Valves. See Drawing 077-18147-003 in Section 21 of TP 7168. Submit a CFR documenting their performance.

3.3.6.8 The contractor must replace all Schrader valve cores and covers.

3.3.7 Control Devices and Indicators. The Contractor must set and verify all control devices, indicators, gauges and thermometers in accordance on the refrigeration skid and the rest of the system.

3.3.7.1 The contractor must conduct all the checks shown in Tech Pub 7168, Section 19, CHECKING CONTROL DEVICES AND INDICATORS. Note that calibration (step 8) and/or "Calibration Connections" is required. Calibrate to a standard of +/- 5%, not the 2 psi standard that is listed in the Section 19 instructions. Submit a CFR summarizing which pieces of equipment have been calibrated and which will have to be replaced.

3.3.7.2. Other components for calibration, including RTDs, thermometers and temperature switches, are shown in CG Dwg 750-WMSL-516-001 in the equipment table and the List of Thermometers. The thermometers and RTDs must be calibrated, and the temperature switches must be function checked and adjusted.

3.3.8 Condenser. The Contractor must clean and inspect condenser tubes in accordance with Tech Pub 7168, Section 19, SCHEDULED MAINTENANCE, CHECKING CONDENSER HEAD GASKETS, TUBE SHEETS AND TUBES. Assume that the condenser will need to be cleaned per Step (4). Submit a CFR.

3.3.9 Filter/Drier. The Contractor must change out the filter/drier elements in accordance with Tech Pub 7168, Section 19, SCHEDULED MAINTENANCE, FILTER/DRIER CARTRIDGE RENEWAL OR REACTIVATION. Note that cartridges must be replaced, and temporary drying per step (7) is not acceptable. Dryer element is Sporlan, Model C-R425, and the cartridge core (which will be replaced) is Sporlan Part Number RCW-42 qty. five (5) per ship.

3.3.10 Replace moisture indicator inserts. Moisture indicators are Sporlan,Model SA-15S and the replaceable portion is Sporlan Part Number KSA4, qty. 16 per ship. Submit a CFR stating the status of the moisture indicators before they were replaced.

3.3.11 Motor Controller. The Contractor must open and visually inspect each of the motor controllers and the main cut-out switch on each refrigeration plant. Vacuum and remove any dust from inside of the controller. Tighten all internal connections. Submit a CFR documenting the as-found condition of these electrical components.

3.3.12 Time Meter. The Contractor must replace the Elapsed Time Meter, PC 16, Drawing 05040 in Section 16 of TP 7168.

3.3.13 Coil Heaters The Contractor must ensure all coil heaters and drain heaters operate properly. See Drawing 077-18147-003 in Section 21 of TP 7168. Submit a CFR documenting their performance.

3.3.14 Flexible Piping. The Contractor must renew liquid flexible piping element and vapor flexible piping element, PC 28 and PC 29 respectively, Drawing 077-18147-002 in Section 21 of TP 7168. These hoses are also shown in Drawings 026-41967-000 and 026-41968-000 in Section 21 of TP 7168.

3.3.14.1 This flex hose is brazed in place. The old one will need to be cut out and the new one will need to be brazed in according to SFLC Std Spec 0740.

3.3.14.2 The contractor must conduct a hydrostatic test of the welds in accordance with Coast Guard Drawing 750-WMSL-516-001 “Piping Design Table.” Utilize SFLC Std Spec 0740 paragraph C2.2.5 for overpressure protection.

3.4. Post-work Leak Test and Recharge. Once all parts are rebuilt or replaced, the contractor must conduct a refrigerant leak test of the system and recharge with R134a.

3.4.1 Leak Test. The contractor must conduct a refrigerant leak test in the presence of the Coast Guard Inspector in accordance with procedures shown in "Leak Test following Installation or Major Repairs” in the “Corrective Maintenance” portion of Section 19, TP 7168 .

3.4.2 Upon completion of the leak test, pull each unit into vacuum of at least 500 microns and hold for at least five minutes. Submit a CFR if this is not possible.

3.4.3 Break the vacuum only to charge with R134 in accordance with the CAUTION note in the SAFETY SUMMARY of TP 7168.

3.5 Operate Plant. The Contractor must, with the aid of ship’s force, test operate each refrigeration plant and make the necessary adjustments to ensure proper operation.

3.5.1 Adjust to proper Super Heat Value in accordance with Checking Operation Following Startup, Section 18 of TP 7168. Submit a CFR documenting settings.

3.5.2 The Contractor must adjust the defrost timer in accordance with Section 18, Refrigerated Room Automatic Defrosting in the presence of a Coast Guard Inspector. Submit a CFR documenting the relevant settings for proper operation of the defrost system.

3.6 Final Operational Test and Data Collection. The Contractor must witness Coast Guard personnel perform a final operational test of all items or shipboard devices to be disturbed, used, repaired, or altered, to demonstrate existing operational condition. Submit a CFR.

3.6.1 When testing the refrigeration plant, record operating data per Paragraph 5.7, “Checking operating data,” Section 7 of TP 7168. Any out-of-spec results must be corrected by the Contractor. Submit a CFR.

3.7 Touch-up preservation. The Contractor must prepare and coat all new and disturbed exterior and interior surfaces to match existing adjacent surfaces, in accordance with SFLC Std Spec 6310, Appendix A (Cutter and Boat Exterior Painting Systems) and Appendix B (Cutter and Boat Interior Painting Systems), respectively, and as applicable. Abide by all touch-up requirements outlined in SFLC Std Spec 0000, Appendix A (Requirements for Preservation of Ship Structures).

4. NOTES

This section is not applicable to this work item.

WORK ITEM 9: Side Boat Davit, Renew

1. SCOPE

1.1 Intent. This work item describes the requirements for the Contractor to renew the side boat davit and to start-up and test the side boat davit (i.e. Allied Systems Dual Point Davit Model No. DDP 11000 CTS & SP 2200).

1.2 Government-furnished property.

MTI	ITEM DESCRIPTION	NSN/PN	QTY	ESTIMATED COST ($/UNIT)
N	Allied Systems Dual Point Davit with Control Console	DDP11000CTS & SP2200 NSN:2030-016306123	1 ea.	$480,000
Y	CB-OTH Mark IV (Coast Guard Drawing 26B-CB-IV-801-001)		1 ea	

2. REFERENCES

COAST GUARD DRAWINGS

Coast Guard Drawing 418A-WMSL-100-1 Rev B, General Arrangements

Coast Guard Drawing 418A-WMSL-100-6 Rev B, Inboard and Outboard Profiles

Coast Guard Drawing 750-WMSL-100-051, Rev J, Unit 4310 Structure – 01 Level to 02 Level – Frame 44 to Frame 52

Coast Guard Drawing 750-WMSL-100-052, Rev J, Unit 4320 Structure – 02 Level and Above – Frame 48 to Frame 53

Coast Guard Drawing 750-WMSL-100-053, Rev J, Unit 4420 Structure – 01 Level and above – Frame 52 to Frame 67

Coast Guard Drawing 750 WMSL-100-530, Rev G, Modifications incidental to the installation of Allied Dual Pont Davit

Coast Guard Drawing 750-WMSL-300-002, Rev C, Electrical Standard Details (ASC300003)

Coast Guard Drawing 750-WMSL-320-042, Rev C, Electrical One Line Diagram (NSC 6 SRD)

Coast Guard Drawing 750-WMSL-520-504, Rev D, Seawater Cooling Piping Mods IWO Dual Point Davit Installation

Coast Guard Drawing 750-WMSL-583-002, Rev D, Small Boat Starboard Handling System Arrangement & Details

Coast Guard Drawing 750-WMSL-583-518, Rev D, Hydraulic Piping Mods IWO Dual Point Davit Installation

Coast Guard Drawing 750-WMSL-631-002, Rev M, Paint Schedule (ASC631002)

Coast Guard Drawing 750-WMSL-634-001, Rev H, Deck Covering Schedule (ASC634001)

Coast Guard Drawing 750-WMSL-635-002, Rev K, Insulation Arr & Details Thermal, Acoustic, & Fire (ASC635002)

NAVSEA Drawing 804-5773931, Rev A, Acoustic & Thermal Insulation for Compartments Installation Details

NAVSEA Drawing 804-5959308, Rev -, Lifeline Systems

COAST GUARD PUBLICATIONS

Surface Forces Logistics Center Standard Specification 0000 (SFLC Std Spec 0000), 2022, General Requirements

BOAT DAVIT - MODELS DDP11000CTS & SP2200 (S/N: 2328-753, 2329-751, 2332-750) - TECHNICAL MANUAL

Surface Forces Logistics Center Standard Specification 0740 (SFLC Std Spec 0740), 2022, Welding and Allied Processes

Surface Forces Logistics Center Standard Specification 3041 (SFLC Std Spec 3401), 2022, Shipboard Electrical Cable Test

Surface Forces Logistics Center Standard Specification 3042 (SFLC Std Spec 3042), 2022, Shipboard Electrical Cable Removal, Relocation, Splice, Repair, and Installation

Surface Forces Logistics Center Standard Specification 5000 (SFLC Std Spec 5000), 2022, Auxiliary Machinery Systems

Surface Forces Logistics Center Standard Specification 6310 (SFLC Std Spec 6310), 2022, Requirements for Preservation of Ship Structures

Coast Guard Technical Publication (TP) 7902, "Preliminary' Dual Point Davit – Models DDP11000CTS & SP2200 (S/N – 2313 & 2315) **We need the serial number of the new Davit**

OTHER REFERENCES

MIL-DTL-15024, Nov 1997, Plates, Tags and Bands for Identification of Equipment

Allied Systems Drawing Number 68992, 2013, General Arrangement

Allied Systems Drawing Number 70082, 2013, Installation Drawing

International Standards Organization (ISO) 4406, 1996, Hydraulic Fluid Power – Fluids – Method for Coding the Level of Contamination by Solid Particles

Society of Automotive Engineers (SAE) J1273, 2009, Recommended Practices for Hydraulic Hose Assemblies

Society of Automotive Engineers (SAE) J1475, 2009, Hydraulic Hose Fittings for Marine Applications

Society of Automotive Engineers (SAE) J1942/1, 2010, Qualified Hoses for Marine Applications

3. REQUIREMENTS

3.1 General.

3.1.1 CIR. The Contractor must submit a CIR for the inspections listed in the following paragraph(s):

- 3.4.1 Deck Inspection

3.1.2 Tech Rep.

3.1.2.1 The Contractor must provide the services of an Original Equipment Manufacturer (OEM) Tech Rep who is familiar with the Allied Dual Point Davit to do the following, on site:

- Provide Technical Support during installation.
- Advise on OEM manufacturer's proprietary information pertinent to the system.
- Ensure compliance with OEM manufacturer's procedures and standards during installation.
- Provide Technical Support for safety circuit and control circuit verification.
- Provide Technical Support during load test and sea trail acceptance test.
- Install latest Operating Software.

3.1.2.2 Ensure the Tech Rep has a résumé of demonstrated experience with the system/equipment stated above.

3.1.2.3 Submit a copy of the Tech Rep's résumé and a list of references to the to the COR at the Arrival Conference.

3.1.3 Protective measures - general. The Contractor must furnish and install all protective coverings to seal off and protect all non-affected vessel's components, equipment, and spaces in the vicinity of the work area against contamination during the performance of work. Upon completion of work, the Contractor must remove all installed protective measures, inspect for the presence of contamination, and return all contaminated equipment, components, and spaces to original condition of cleanliness.

3.1.3.1 Protective measures - hydraulic system(s). The Contractor must maintain existing hydraulic system cleanliness and take all necessary precautions to prevent the introduction of contaminants into the hydraulic system. Immediately after disconnecting or removing components from the hydraulic system, the Contractor must completely seal all openings to the rest of the system using caps for externally threaded connection points, bolt-on blanks, or taped-on discs/covers made of durable plastic or sheet-metal that is no less than 1/16-inch thick.

NOTE

Plastic bags may be used only when arrangement or configuration prevents the use of the other sealing methods specified above.

3.1.4 Interferences. The Contractor must handle all interferences in accordance with SFLC Std Spec 0000, paragraph 3.3.5 (Interferences). Known interferences include, but are not limited to the below-listed:

- Piping
- Electrical Cables
- Vent

- Ladders
- 02 Level Catwalk Support foundation
- Speaker
- CCTV Camera
- Overhead Lights
- Heat exchanger
- Hydraulic oil

3.1.6 Welding requirements. In case welding is necessary, the Contractor must accomplish all welding in accordance with SFLC Std Spec 0740.

3.1.7 NDI. The Contractor must perform NDI of all Contractor welding in accordance with SFLC Std Spec 0740, Appendix C. Submit a CFR.

3.1.8 Electrical requirements. The Contractor must accomplish all electrical work in accordance with SFLC Std Spec 3042, and test cables in accordance with SFLC Std Spec 3041. Existing wireways must be utilized for new cable runs as much as possible.

3.1.9 Crane, rigging and GFP transport services. The contractor must provide crane, rigging, and transport services needed to renew the Allied Dual Point Davit.

3.1.10 Hose tags. The Contractor must verify/provide hose tags in accordance with MIL-DTL-15024. Ensure tag color coding of black on natural or black on white. Ensure that tags must be attached using materials that will not damage hose assembly in any way, or interfere with the normal flexing motion of the hose. Ensure hose tags are visible (not covered by chaffing gear).

3.1.10.1 Hose tag information. Ensure the following is placed on each hose tag:

- Hose Log Item Number (Serial Number)
- Hydro Test Pressure and Test Date [DD/MM/YY]

NOTE

Hydro Test Pressure and Test Date may be provided by the assembly manufacturer on an independent tag. Where a hydro test is not required, insert the annotation "NA".

- Service Life (Replacement Date) Date [QTR "Q"/FY]
- The Contractor must stamp information on each tag. Hand written information on Tags is NOT acceptable.

3.1.11 Work location. See the Coast Guard Drawings referenced in the Section 2 for locations, details, material requirements, and guidance.

3.1.12 Work Coordination. This work item must be coordinated with work item for tenting to ensure that tenting does not interfere with crane operations for remove/install/testing of the davit.

3.1.13 The GFP will be provided to Contrator inside a conex box. The Contractor is responsible for removing GFP materials from Conex box and for returning removed davit components back into the Conex box.

3.1.13.1 The GFP includes but is not limited to the following: one (1) self-contained "palletized" Allied Systems Dual Point Davit complete with control console.

3.2 Operational test - initial. Prior to commencement of work, the Contractor must witness Coast Guard personnel perform an initial operational test of all items or shipboard equipment to be disturbed, used, repaired, or altered, to demonstrate existing operational condition. Submit a CFR.

3.3 Renew Dual Point Davit (DPD). The Contractor must follow guidance from Tech rep, Coast Guard Tech Pub and referenced drawings to renew the Dual Point Davit.

NOTE

Davit hydraulic fluid heat exchanger is located in the Rescue Station (Compartment 2-48-1-Q).

3.3.1 Fluid disposal. The Contractor must drain the hydraulic fluid from the Davit HPU system (approximately 200 gallons) in accordance with Tech Rep guidance. Dispose of the fluid in accordance with all Federal, state and local regulations. Do not drain fluid into any space, bilge or exterior location.

3.3.2 All isolation valves must be closed and tagged out and blanking plates must be in place prior to removal of davit.

3.3.3 All disconnect and isolation switches must be placed in the "off" position and tagged out and all wiring to motor controllers, electrical and control panels, local control stations and from various sensors must be tagged out and disconnected prior to ripout of any electrical devices and piping.

3.3.4 The Contractor must partially disassemble the old davit to same configuration as the new davit was received. Wrap and crate the removed and disassembled Dual Point Davit and associated components in the same configuration as the new davit was received. Contractor may reuse crating materials from the new boat davit. Place and secure all of removed davit components in the conex box.

3.4 Partial preservation. While the davit is removed, the Contractor must prepare and preserve up to 33% of the davit foundation/structure, in accordance with SFLC Std Spec 6310, Appendix A, using the system specified for "Freeboard/Superstructure/Mast (Freeboard/Superstructure, Steel)" Option II.
Power tool clean all affected surfaces to "bare metal" in accordance with SSPC-SP 11, in lieu of using abrasive blasting; and feather edges of existing intact coating to the prepared areas, in order to provide a smooth transition with the new coating. Conduct inspections and SSPC SP-1 (solvent cleaning) on the structure prior to conducting surface preservation.

3.4.1 Davit foundation and support structure inspection. In presence of the Coast Guard Inspector, the Contractor must inspect all support structures normally covered by the deck surface DPD.

3.4.1.1 Visual inspection (VT). The Contractor must visually inspect all exposed substrates for any pitting, corrosion, and erosion. Submit CFR with all inspection NDT results. Include pit measurements and UT.

NOTE

Depending on level of corrosion and condition of deck the quantity of pit measurements and UT shots required may be less than those indicated. If more are necessary (severely corroded decks), the Contractor must submit CFR.

3.4.1.2 Pit measurement. The Contractor must measure all observed pits on exposed substrates (after removing/cleaning surface covering/coatings and prior to priming substrates) in accordance with SFLC Std Spec 0740, Paragraph 3.13 (Evaluation of pitting corrosion). For bidding purposes, the Contractor must estimate 20 pit measurements are required.

- Mark up a copy of Coast Guard Drawings to show all locations selected for measurement.
- Report the measurements including results (the depth of the pits), locations, and illustrations/marked up drawings.

3.4.1.3 Ultrasonic measurement (UT. The Contractor must take UT measurements in the surrounding area of any pit measuring greater than 25% of plate thickness. UT measurements must be taken in the four quadrants at an equal-distant radius from the pit center until full plate thickness is measured. For bidding purposes, the Contractor must estimate 80 UT measurements. All UT measurements must be taken on cleaned surfaces in accordance with SFLC Std Spec 0740 Appendix C.

- Mark up a copy of Coast Guard Drawings. Show all locations selected for measurement.
- Report the measurements including results (thicknesses, and cracks), locations, and illustrations/marked up drawings.

3.4.2 Substrate fairing and repair by filling Epoxy for shallow pits and small corrosions (i.e. pits < 25% or corrosions < 25%). As designated by the COR, the Contractor must repair small pin holes, shallow pitted substrates (with remaining plate thicknesses over 75% of required plate thicknesses), and fair corroded substrates (with remaining cross sections over 75% of required cross section areas), after removing insulation, coating, or deck covering using Epoxy Fairing Material in accordance with SFLC Std Spec 6310, Appendix A (Cutter and Boat Exterior Painting Systems), "Metal Repair and Hull Smoothing", MIL-PRF-24176, and manufacturers' instructions. For estimating purposes the Contractor must estimate 1 kit epoxy fairing compound will be required.

NOTE
"Substrate fairing and repair by filling Epoxy for shallow pits and small corrosions (i.e. pits < 25% or corrosions < 25%)" is a supplement barrier intending to help delay penetration.

3.5 Installation of new DPD. Davit structure must be assembled off-ship and in accordance with davit manufacturer's drawings and assembly instructions. Rigging of the davit for lifting aboard the cutter must be in accordance with manufacturer's instructions. Electrical and hydraulic interconnection of davit major assembles must be in accordance with manufacturer's instructions. Allied System Tech Rep must be present to provide guidance in the installation of davit arms and davit skid on the Cutter.

3.5.1 All bolted connections must be torqued in accordance with the davit manufacturer's drawings and assembly instructions. Fastening hardware must be free of corrosion, burrs, or other defects that will inhibit clamping forces and fastener performance. Fasteners must be evenly and lightly lubricated prior to assembly.

3.5.2 The foundation platform for the davit must be installed such that the davit base is parallel to the centerline of the ship.

3.5.3 Winch and sheaves must be lubricated in accordance with the davit manufacturer's recommendations prior to operation of the davit.

3.5.4 The davit must be reeved in accordance with the davit manufacturer's drawings and reeving instructions. Contractor must pressure lubricate wire ropes in accordance with Tech pub.

3.6 Electrical work. The Contractor must inspect installed floodlights, terminal boxes, circuit breaker, nameplates and associated cables as shown on Coast Guard Drawing 750-WMSL-320-580. The Contractor must verify that all electrical installation is performed in accordance with " INSTALLATION NOTES" of the Coast Guard Drawing 750-WMSL-320-580, See sheets 5,6 and 7.

3.6.1 Mount motor controller enclosures and emergency stop stations, install power feeders, and install interconnect wiring between davit subassemblies as shown Coast Guard Drawing 750-WMSL-320-580.

3.7 Notifications and inspections. The Contractor must notify the COR at least seven (7) working days prior to said Contractor being ready for any inspections or testing. This notice must be in writing.

3.8 Acceptance testing. The contractor must conduct the acceptance testing, as indicated on 3.8 subparagraphs of this work item. All acceptance tests must be performed in the presence of the Coast Guard Inspector and OEM Tech Rep. Submit a CFR.

3.8.1 Test performance. The Contractor must provide OEM Tech Representative during all acceptance tests for the government furnished equipment.

3.8.2 Direction of rotation test. Perform a direction of rotation test on each new and disturbed three-phase or direct current motor circuit.

- Check multi-speed motors in each speed by directly starting from OFF. Do not switch from one speed to another until proper direction of rotation has been confirmed in all speeds.
- Correct any improperly phased or polarized wiring and repeat the test.

3.8.3 Operational test. Verify proper operation of the components or systems affected by this work. During this testing, run the equipment through its full range of capabilities in all configurations and operating modes. Verify that check, globe, flow control, and relief valves are installed in the proper flow orientation.

3.8.3.1 The Contractor and the Tech Rep must coordinate with COR to provide crew training on operation of the boat Davit for normal and emergency operations including the constant tensioning winch. Contractor must submit CFR listing names of crew members that attended the training for boat davit operation.

3.8.4 No Load test. This test must be to verify proper operation and full range of motion for all machinery and controls for the davit. Operation of the Anti-2-Blocking system must be included in this test. Back-up emergency manual operation (non-hydraulic) of the winch must be included in this test. The Contractor must provide Tech Support during all check out of safety systems and control circuits. Submit a CFR.

3.8.5 Load testing. The Contractor must provide OEM Tech Rep to conduct following load testing.

3.8.6 Static Load test. Davit frame must be static load tested to 200% of the Working Load Limit to prove the structural installation on the cutter. Davit arms must be static load tested together, at full

extension, with a test load added vertically. The test weights or test force for all Static Load Tests must be externally applied.

NOTE

Static Load Tests are for structure only, and do not include the rigging or crane winches.

3.8.7 Brake test / modified static load test. The davit brake must be tested to 150% of the Working Load Limit to demonstrate the brake holds and releases correctly.

NOTE

The Brake Test / Modified Static Load Test is conducted by externally applying the test load to the davit rigging.

3.8.8 Marine rated load operational test. An operational load test of 125% of the Working Load Limit must be performed. Hydraulic relief valves and pressure compensation valves must not be adjusted to conduct this test, and must not be readjusted after this test.

3.8.9 Rated load test. An operational load test must be conducted at 100% of Working Load Limit to confirm the operating speeds in both the raise and lower directions.

3.9 Sea trial demonstration. The Contractor must, in conjunction with the Coast Guard, conduct Sea Trial Demonstration of the installed system using the Test Plan prepared by the boat davit manufacturer. This test must comprise a series of launches and retrievals with the cutter underway under varying conditions. During sea trials of the side boat testing, the Contractor must provide Tech Support from Allied System.

3.9.1 Small boat listed in the Table 1 will be provided by the Government for testing.

NOTE

Contractor must anticipate getting underway with cutter for a period up to two (2) days; coordinated during Arrival Conference. These dates are based on cutter availability schedule, which will be monitored/tracked during weekly progress meetings

TABLE 1 – SMALL BOAT INFORMATION

BOAT TYPE	VOLUME OF FUEL TANK (GAL)	TYPE OF FUEL	TOTAL WEIGHT OF THE OUTFIT & CARGO	APPROXIMATE HOIST WEIGHT W/O CREW
CB-OTH Mark IV	100 (Twin 50 gal tanks)	Diesel Oil	183 lb	7,400 lbs (includes boat with complete outfit, full fuel, & 150 lbs of cargo)

3.9.2 In conjunction with the Coast Guard Inspector, the Contractor must conduct Sea Trial Acceptance Test (SAT) of the installed system (i.e. Dual Point Davit) demonstrating full system operations in a sea way, to include boat launch, recovery, tow (sea painter), constant tension function, and operation in both

automatic and manual modes. This test must comprise a series of launches and retrievals with the cutter underway.

NOTE

Sea trial acceptance test will take time at sea up to two (2) days. Trial dates are based on cutter availability schedule, which can be obtained during weekly progress meetings

3.10 Surface preservation. The Contractor must prepare and coat the disturbed surfaces including all adjacent structural members, using the system specified for in SFLC Std Spec 6310. Abide by all touch-up requirement outlined in paragraph 3.11.9 (Touch ups and minor coating repair) of SFLC Std Spec 0000.

3.10.1 Deck covering. The Contractor must repair damaged deck coverings on new and disturbed deck areas in accordance with SFLC Std Spec 6341 and Coast Guard Drawing 750-WMSL-634-001.

3.10.2 Slip-resistant deck covering damage repair. The Contractor must prepare and coat damaged deck surfaces, using the system specified in SFLC Std Spec 6310, Appendix A (Cutter and Boat Exterior Painting Systems).

3.11 Label plate. The Contractor must provide and install a label plate on each component tested to document satisfactory test completion in accordance with SFLC Std Spec 5000, Appendix B, Paragraph B2.9 (Label Plates). Engrave or stamped each label plate with the following information specific to each component tested:

- Working load
- Test load
- Test date
- Test facility

3.12 Operational test – post repairs. After completion of work, the Contractor must thoroughly test, in the presence of the Coast Guard Inspector and demonstrate all items or shipboard devices that have been disturbed, used, repaired, altered, or installed to be in satisfactory operating condition. Submit a CFR.

4. NOTES

4.1 Figure 1.

Plan View

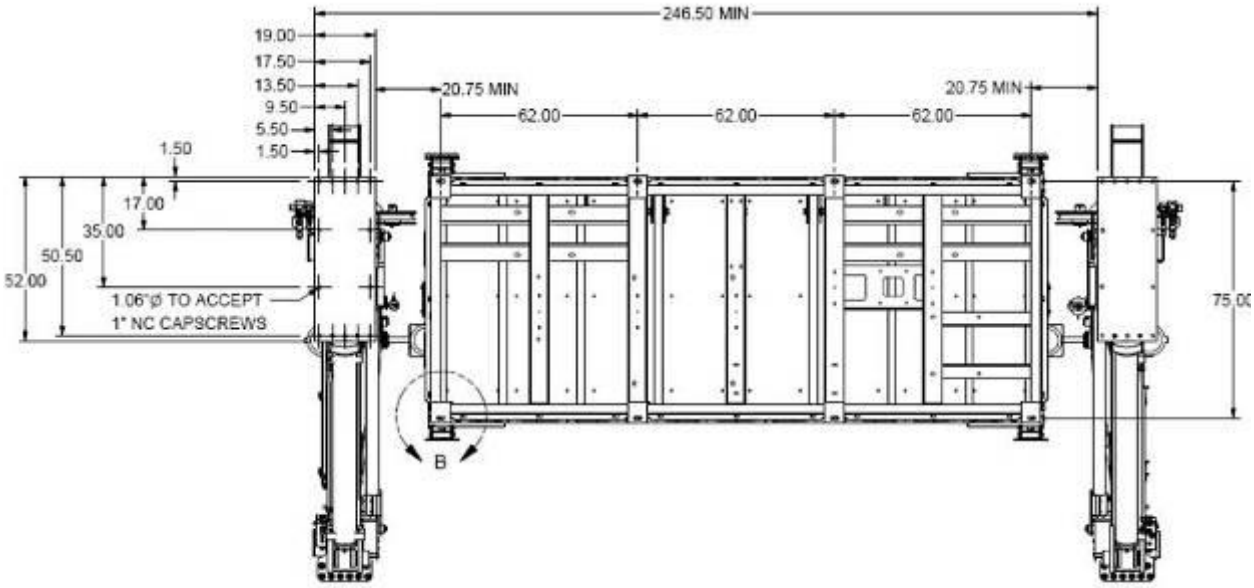

FIGURE 1A: ALLIED SYSTEMS DUAL POINT DAVIT

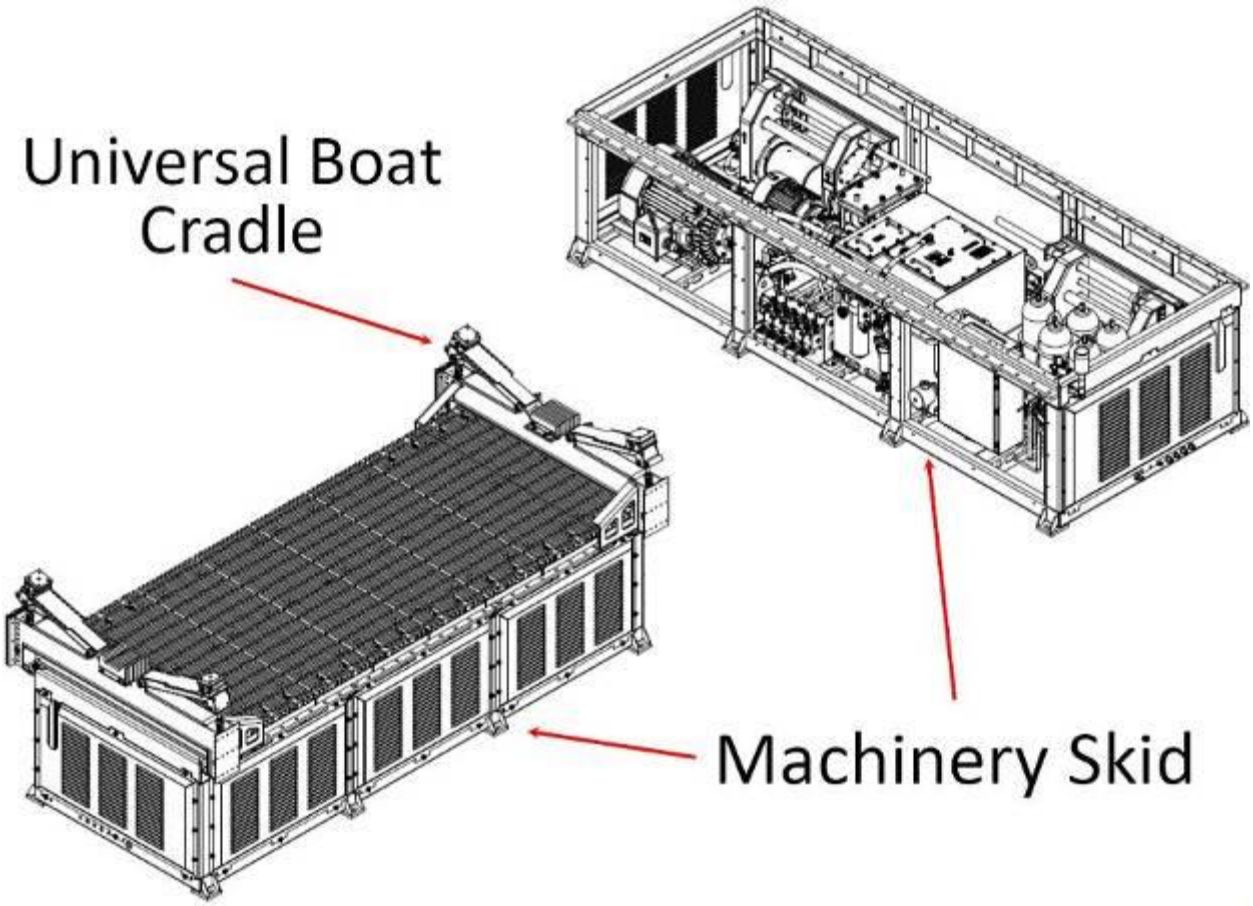

FIGURE 1B: ALLIED SYSTEMS DUAL POINT DAVIT

FIGURE 1B: ALLIED SYSTEMS DUAL POINT DAVIT AT OEM FACILITY

FIGURE 3: CGC STRATTON DUAL POINT DAVITPHOTOGRAPHS FOR REFERENCE ONLY

WORK ITEM 10: Oily Water Separator (OWS) System, Inspect and Groom

1. SCOPE

1.1 Intent. This work item describes the requirements for the Contractor to inspect and groom the Oily Water Separator (OWS) located in the Auxiliary Machinery Room (5-36-01-E).

NOTE

Some oily water must be available in the tank to test the Oily Water Separator

1.2 Government-furnished property.

MTI	ITEM DESCRIPTION	NSN/PN	QTY	ESTIMATED COST ($/UNIT)
Y	Monitor, Smart Bilge	NSN: 2040-01-600-0112	1 ea.	4,700.00

2. REFERENCES

COAST GUARD DRAWINGS

Coast Guard Drawing 418A-WMSL-593-001, Rev A, Bilge & Oil Pollution Control System Diagram

COAST GUARD PUBLICATIONS

Coast Guard Technical Publication (TP) 7346A, SWBS 593, Mar 2022, Bilge Water Separator Ultra-Sep

Surface Forces Logistics Center Standard Specification 0000 (SFLC Std Spec 0000), 2022, General Requirements

Surface Forces Logistics Center Standard Specification 3041 (SFLC Std Spec 3041), 2022, Shipboard Electrical Cable Test

Surface Forces Logistics Center Standard Specification 3042 (SFLC Std Spec 3042), 2022, Shipboard Electrical Cable Removal, Relocation, Splice, Repair, and Installation

Surface Forces Logistics Center Standard Specification 6310 (SFLC Std Spec 6310), 2022, Requirements for Preservation of Ship Structures

OTHER REFERENCES

US Environmental Protection Agency Method 1664, Feb 1999, N-Hexane Extractable Material and Silica Gel Treated N-Hexane Extractable Material by Extraction and Gravimetry.

3. REQUIREMENTS

3.1 General.

3.1.1 CIR. The Contractor must submit a CIR for the inspections listed in the following paragraph(s):

- 3.3.1. Inspection

3.1.2 Tech Rep. The Contractor must provide the services of an OEM authorized/ licensed Tech Rep for the OWS (Model Number: US5000) to accomplish the following on site:

- Provide manufacturer's proprietary system/ equipment information, software, and tools.
- Assist with and ensure compliance with manufacturer's procedures and standards during disassembly, inspection, repair, modification, calibration, and reassembly of the equipment/system.
- The Tech Rep must be present in all aspects of this work item.
- Perform on-site calibration of the oil content monitor assembly.
- Conduct operations familiarization of the equipment to ship's crew after completion of repair work.

3.1.2.1 Ensure the Tech Rep is an OEM Certified Representative for the system/equipment stated above and demonstrated on their résumé.

3.1.2.2 Submit the name and résumé of the Tech Rep to the COR at the Arrival Conference.

3.1.3 Protective measures. The Contractor must furnish and install all protective measures in accordance with SFLC Std Spec 0000, paragraph 3.3.3 (Vessel component, space, and equipment protection).

3.1.4 Interferences. The Contractor must handle all interferences in accordance with SFLC Std Spec 0000, paragraph 3.3.5 (Interferences). Known interferences include, but not limited to the following:

- Piping
- Ventilation ducting
- Overhead lighting
- Electrical wiring

3.1.5 The Contractor must dispose of residual OWS fluids in compliance with all applicable Federal, state, and local laws, ordinances, regulations and SFLC Standard Specification 0000. Notify the COR (in writing) at least 5 days prior to removal of wastes and fluids. Document a complete chain of custody record of the removed contents and generated wastes, from the vessel to the point of final destination or delivery. Submit document to the COR upon completion of work.

3.1.6 Electrical requirements. The Contractor must accomplish all electrical work in accordance with SFLC Std Spec 3042, and test cables in accordance with SFLC Std Spec 3041.

NOTE

Coast Guard personnel will operate all shipboard equipment and machinery at all times.

3.2 Operational test, initial. Prior to commencement of work, the Contractor must witness Coast Guard personnel perform an initial operational test of all items or shipboard devices to be disturbed, used, repaired, or altered, to demonstrate existing operational condition. Submit a CFR.

3.2.1 The Contractor must take a 1-liter sample of the effluent and complete a USEPA Test Method 1664 oily water test result after one hour of operation. This will require removing and re-installing a check valve adjacent to the overboard.

CAUTION

The overboard discharge valve must be closed to ensure no liquid from the OWS is pumped overboard during OWS operation.

3.3 Inspection and maintenance. The Contractor must accomplish the following tasks for the OWS in accordance with Section 5 of Coast Guard TP 7346A. The Contractor must also renew parts listed in Table 1 in accordance with CG TP 7346A.

TABLE 1 – LIST OF PARTS

QUANTITY	PART NUMBER	DESCRIPTION
4	MUFO0852	Membrane, UFO WS 8 Inch
8	MUSK1836	Single Element Membrane Housing Seal Kit
1	HCON0098	Heli-Sep OWS 5000 Cover Seal O-Ring
1	ORGN8000	Process Filter (FIL1) Cover Seal O-Ring
8	FBGB0582	Process Filter S12 5 Micron Bag
2 lbs	ASMS0000	SPIR-O-Lator Preservative
5 Gallons	MCLN6732	SPIR-O-LATOR Cleaner Alkaline
5 Gallons	MCLN7147	SPIR-O-LATOR, Cleaner Acid

3.3.1 Inspect OWS unit components for damage, tightness, and compliance with TP 7346A arrangement/configuration requirements. This inspection must cover following components. Submit a CIR identifying conditions and deficiencies including recommendations for any repairs.

- Membrane Housings (SPIR-O-LATOR Rack)
- Feed Pump Assembly (PU1)
- Process Filter Assembly (FIL1)
- Process Pump Assembly (PU2)
- Heli-Sep Separator (Coalescing Unit)
- Oil Content Detector/Monitor (OCM)
- Product Loop Assembly (piping assembly)
- Recirculation Assembly (piping assembly)
- Motor Controller Assembly

- Control Panel
- Gauge Panel
- System Relief Valves

3.3.2 Flush the Oily Water Separator System in accordance with paragraph 5.1 of CG TP 7346A. Appendix "C" drawings and schematics provide valve and component designations.

3.3.3 Verify that flushing of the SPIR-O-LATOR system can be triggered by three different methods (i.e., manual, system shut down, and automatic) identified in paragraph 5.1.1 of CG TP 7346A.

3.3.4 Flush the HELI-SEP separator vessel in accordance with paragraph 5.1.2 of CG TP 7346A.

3.3.5 Flush the SMART-CELL/OCM in accordance with paragraph 5.1.3 of CG TP 7346A after renewal per paragraph 3.5.

3.3.6 Clean the process filter canister and renew the filter bag (i.e. Filter bags Part Number: FBGB0582, and Cover Assembly O-rings Part number: ORGN8000) and seal in accordance with paragraph 5.3 of CG TP 7346A. Appendix "C" drawings and schematics provide valve & component designations.

3.3.7 Clean the SPIR-O-LATOR assembly in accordance with paragraph 5.4 of CG TP 7346A. Cleaning will require use of detergent selected to suit the "as found" condition. The Contractor must assess "as found" condition and provide appropriate cleaning detergent option after considering options provided in CG TP 7346A, paragraph 5.4.4.

3.3.8 Clean the oil sensing probe in accordance with paragraph 5.6 of CG TP 7346A.

3.3.9 Remove solids and sludge from separator vessel in accordance with paragraph 5.8 of CG TP 7346A.

3.3.10 Drain, open the top cover on the HELI-SEP separator unit, and wipe clean the accessible interior surfaces. Visually inspect the interior.

3.3.11 Note any unusual conditions found while performing cleaning and inspections listed above. Submit a CFR including repair recommendations to the CG Representative.

3.4 <u>Oil content detector renewal</u>. The Contractor must renew the Oil Content Monitor with the government furnished property in accordance with TP 7346A.

3.4.1 Provide the Data Sheet of the calibrated Oil Content Meter. Indicate the accuracy of the calibration equipment and OCM. Affix a label to the meter showing Certification Date, Due Date for Next Calibration, and Name of Calibration Laboratory.

3.4.2 The calibration label must be affixed on OCM so that it is easily visible without interference with meter reading. Transparent tape must be placed on all paper calibration labels.

3.4.3 The Contractor must clean the OCM panel and remove loose paint/foreign object.

3.4.4 Complete water connections in the presence of a Coast Guard Inspector.

3.5 <u>Oily Waste Offload</u>. The Contractor must offload 2,500 gallons of oily waste from the oily waste

holding tanks. The discharge connections are 2" international flanged shore connections, and the contractor will need to provide hose to offload the tanks. The Contractor must dispose of residual fluids in compliance with all applicable Federal, state, and local laws, ordinances, regulations and SFLC Standard Specification 0000. Notify the COR (in writing) at least 5 days prior to removal of wastes and fluids. Document a complete chain of custody record of the removed contents and generated wastes, from the vessel to the point of final destination or delivery. Submit document to the COR upon completion of work.

3.6 Commissioning. The Contractor must complete Section 4.4 of TP 7346A and ensure that the system is operating properly.

3.6.1 While completing these processes, the Contractor must explain these steps to Coast Guard personnel and answer questions to enhance the crew's knowledge of the system. For bidding purposes, assume that these explanations will make the processes of completing Section 4.4 two hours longer than usual.

3.6.2. The Contractor must provide at least 2 business days of notice to the COR prior to starting this task.

NOTE

Coast Guard personnel will operate all shipboard machinery and equipment.

3.7 Operational test, post repairs. After completion of work, the Contractor must witness Coast Guard personnel perform an operational test of all items or shipboard devices that were disturbed, used, repaired, or altered, or installed be in satisfactory operating condition. Submit a CFR

3.7.1 The Contractor must take a 1-liter sample of the effluent and complete a USEPA Test Method 1664 oily water test result after one hour of operation. This will require removing and re-installing a check valve adjacent to the overboard.

3.8 Touch-up preservation. The Contractor must prepare and coat all new and disturbed surfaces to match existing adjacent surfaces in accordance with SFLC Std Spec 6310, paragraph 3.1.13 (Touch-ups and minor coating repairs).

4. NOTES

This section is not applicable to this work item.

WORK ITEM 11: Tanks (Potable Water), Preserve (100%) Optional

1. SCOPE

1.1 Intent. This work item describes the requirements for the Contractor to prepare and preserve 100% of the interior surfaces of the following tank(s):

TABLE 1 - POTABLE WATER TANKS

LOCATION	COMPONENTS	SYSTEM/APPENDIX (SFLC STD 6310)	TOPCOAT COLOR	PRESERVE LEVEL
Potable Water Tank 3-68-4-W	Inner Bottom, Ovhd&Bhd Structures	Tanks and Voids (Potable Water Tanks)	White	Full
Potable Water Tank 3-68-3-W	Inner Bottom, Ovhd&Bhd Structures	Tanks and Voids (Potable Water Tanks)	White	Full

1.2 Government-furnished property.

None.

2. REFERENCES

COAST GUARD DRAWINGS

Coast Guard Drawing 418A-WMSL-801-001, Rev B, Booklet of General Plans

Coast Guard Drawing 750-WMSL-100-37, Rev J, Unit 3120 Structure - 1st Platf to 2nd Dk - Fr 64 to Fr 76 (ASC100312)

Coast Guard Drawing 750-WMSL-167-001, Rev K, Manhole List Installation and Fabrication Details Ship Wide (ASC167001)

COAST GUARD PUBLICATIONS

Surface Forces Logistics Center Standard Specification 0000 (SFLC Std Spec 0000), 2022, General Requirements

Surface Forces Logistics Center Standard Specification 6310 (SFLC Std Spec 6310), 2022, Requirements for Preservation of Ship Structures

Surface Forces Logistics Center Standard Specification 8636 (SFLC Std Spec 8636), 2022, Temporary Hull Accesses

OTHER REFERENCES

None.

3. REQUIREMENTS

3.1 General.

3.1.1 CIR.

None.

3.1.2 Tech Rep. The Contractor must provide the services of a Certified Coating Inspector having successfully completed relevant AMPP (NACE/SSPC) Programs and Trainings to:

- Serve as an Independent Coating Tech Rep.
- Accomplish applicable requirements in SFLC Std Spec 0000, Paragraph 3.2.4.2.2 (Coating Tech Rep).
- Oversee the Preservation Plan requirements in SFLC Std Spec 6310, Paragraph 3.2 (Preservation plan).
- Review and sign daily reports summarizing work. See forms QA-1 thru QA-5 provided in the General Requirements.
- Submit reports to the COR within 24 hours of each inspection.

3.1.2.1 Qualifications/certifications. Submit the Coating Tech Rep's qualifications/certifications in accordance with SFLC Std Spec 0000, 3.2.4.2.2.3 and 3.2.4.2.4, include name, certificate number and documented completion of relevant AMPP (NACE/SSPC) Courses and Exams.

3.1.2.1.1 Submit the name and the certification of the Tech Rep to the COR at the Arrival Conference. Include the dates of services the Qualified Tech Reps will be on site as per their subcontract documentation.

NOTE

This work item requires the use of an AMPP-Certified Tech Rep. The use of a QP-1 certified company/contractor alone is not sufficient.

3.1.3 Protective measures. The Contractor must furnish and install all protective measures in accordance with SFLC Std Spec 0000, paragraph 3.3.3 (Vessel component, space, and equipment protection).

3.1.4 Interferences. The Contractor must handle all interferences in accordance with SFLC Std Spec 0000, paragraph 3.3.5 (Interferences).

3.1.5 Temporary access openings. Due to limited access to work areas, the Contractor may, with express permission of the KO (via submission of a CFR), cut access holes to facilitate accomplishment of the work specified herein. Perform all work required to open and close the access openings in accordance with SFLC Std Spec 8636.

3.1.6 Work plan. The Contractor must provide a work plan (preservation plan including protection plan) for the Tank Preservation listed in Table 1 in accordance with SFLC Std 6310, paragraph 3.2 (Preservation Plan) to COR before or on Arrival Conference.

3.1.6.1 Pre-work preservation conference. Prior to the start of any preservation work, the Contractor must facilitate a conference meeting with the KO, COR, Coast Guard Inspector(s), Contractor and Contractor's representative able to speak to technical preservation details and requirements.

- QC/QA Program. The requirements of SFLC Std Spec 0000 3.2.4.2.2.3, Contractor's QC/QA Program (as outlined in SFLC Std Spec 0000, 3.2.4 QC/QA Program),
- Material Receipt Conformance (as outlined in SFLC Std Spec 6310, 3.1.1.2 Material Receipt Conformance),
- Preservation plan (as outlined in SFLC Std Spec 6310, 3.2 Preservation plan), SFLC Std Spec 6310 3.1.1.3.1 and 3.1.9 must be formally reviewed and approved by the KO,
- PDS and SDS. Only submit Manufacturer's Product Data Sheets (PDS) and Safety Data Sheets (SDS) if NAVSEA approved ASTM F718 sheets are not available.

3.1.7 Work coordination. The Contractor must coordinate the accomplishment of this work item with the following work items(s):

- Tanks (Potable Water), Clean and Inspect

3.2 In-process quality control measures. The Contractor must abide by all the safety, preservation, and quality control requirements specified in SFLC Std Spec 0000, paragraph 3.2.4.2 (In-process QC measures for “critical-coated surfaces”). Surfaces being preserved are considered “critical-coated surfaces”. QA Forms and NACE III Reports must be submitted to the COR for review no later than 24 hours after completion of work.

3.2.1 Daily Reports. At the conclusion of each work day coating has been applied, the Contractor must provide Daily Reports generated and signed by the Coating Tech Rep. Daily reports must summarize work accomplished that current day, work to be accomplished the following day, any and all materials used during work that day, any and all readings taken and/or data collected (i.e. environmental readings, DFT, WFT, etc.) identifications of work locations, time and type of any inspections conducted with the results of such inspection(s) and must also include descriptions of any events of non-conformance in relation to the specification, applicable references, standards, and technical data sheets (i.e ASTM F718s).

3.2.2 Environmental readings. Environmental readings must be accomplished within the agreed upon hours according to the interval outlined in SFLC Std Spec 6310, Appendix D3.1.

3.3 Ventilation requirements. The Contractor must accomplish all requirements of SFLC Standard Spec 6310, 3.1.16 (Ventilation requirements for confined spaces) and SFLC Standard Specification 0000, 3.3.1.1 (Temporary ventilation) throughout the entirety of this work item.

3.3.1 The Contractor must ensure heated air is used if necessary to maintain the proper temperature during application and cure. Ventilation must be a continuous airflow with a minimum of one complete air change every four (4) hours.

3.4 Surface preservation. The Contractor must prepare and coat all (100%) tank interior surfaces (including internal surfaces of manhole cover(s), manhole cover hull ring(s) extending outward to the weld line that ties the hull ring into the tank plating on the tank exterior), using the system specified in

SFLC Std Spec 6310, Appendix B (Cutters and Boat Interior Paint Systems). Select finish/top coat color in accordance with Table 1. Select options as follows:

- Tanks and Voids (Potable Water Tanks)
- Near-White Metal Wet Abrasive Blast Cleaning NACE WAB-2/SSPC-SP 10 (WAB), or Near-White Metal Blast Cleaning NACE No. 2/SSPC-SP 10
- Power Tool Cleaning to Bare Metal (SSPC-SP 11) for limited access areas (including deck edges, coamings, foundations, outfits, and fittings)

3.4.1 Inspection. In presence of and as designated by the Coast Guard Inspector, the Contractor must inspect all cleaned surfaces and exposed substrates of areas in Table 1 (after removing/cleaning surface covering/coatings and prior to priming substrates) in accordance with SFLC Std Spec 6310, paragraph 3.1.8.1 Surface cleanliness evaluation – visual standards. Submit a CFR.

3.4.2 The Contractor must ensure tanks are cured in accordance with the manufacturer's instructions for NSF/NEHC certification under the same conditions before being filled.

3.5 Waste and debris removal. The Contractor must remove all waste and debris generated by the tank preservation process (surface preparation, substrate cleaning, priming, and coating). Waste and debris must be disposed of in accordance with SFLC Std Spec 6310, paragraph 3.1.8.2 (Debris removal and disposal), SFLC Std Spec 0000, and all applicable Federal, state, and local laws, ordinances and regulations.

3.6 Touch-up preservation. The Contractor must prepare and coat all new and disturbed surfaces to match existing adjacent surfaces in accordance with SFLC Std Spec 6310, paragraph 3.1.13 (Touch-ups and minor coating repairs).

4. NOTES

This section is not applicable to this work item.

WORK ITEM 12: Tanks (Potable Water), Preserve (Partial) Optional

1. SCOPE

1.1 Intent. This work item describes the requirements for the Contractor to prepare and coat 33% of the surfaces of the following tank(s):

TABLE 1 – LIST OF TANKS

LOCATION	COMPO	SYSTEM/APPENDIX (SFLC STD 6310)	TOPCOAT COLOR	PRESERVE LEVEL
Potable Water Tank 3-68-4-W	Inner Bottom, Ovhd&Bhd Structures	Tanks and Voids (Potable Water Tanks)	Match Existing	Partial
Potable Water Tank 3-68-3-W	Inner Bottom, Ovhd&Bhd Structures	Tanks and Voids (Potable Water Tanks)	Match Existing	Partial

1.2 Government-furnished property.

None.

2. REFERENCES

COAST GUARD DRAWINGS

Coast Guard Drawing 418A-WMSL-801-001, Rev B, Booklet of General Plans

Coast Guard Drawing 750-WMSL-100-37, Rev J, Unit 3120 Structure - 1st Platf to 2nd Dk - Fr 64 to Fr 76 (ASC100312)

Coast Guard Drawing 750-WMSL-167-001, Rev K, Manhole List Installation and Fabrication Details Ship Wide (ASC167001)

COAST GUARD PUBLICATIONS

Surface Forces Logistics Center Standard Specification 0000 (SFLC Std Spec 0000), 2022, General Requirements

Surface Forces Logistics Center Standard Specification 6310 (SFLC Std Spec 6310), 2022, Requirements for Preservation of Ship Structures

Surface Forces Logistics Center Standard Specification 8636 (SFLC Std Spec 8636), 2022, Temporary Hull Accesses

OTHER REFERENCES

None.

3. REQUIREMENTS

3.1 General.

3.1.1 CIR.

None.

3.1.2 Tech Rep. The Contractor must provide the services of a Certified Coating Inspector having successfully completed relevant AMPP (NACE/SSPC) Programs and Trainings to:

- Serve as an Independent Coating Tech Rep.
- Accomplish applicable requirements in SFLC Std Spec 0000, Paragraph 3.2.4.2.2 (Coating Tech Rep).
- Oversee the Preservation Plan requirements in SFLC Std Spec 6310, Paragraph 3.2 (Preservation plan).
- Review and sign daily reports summarizing work. See forms QA-1 thru QA-5 provided in the General Requirements.
- Submit reports to the COR within 24 hours of each inspection.

3.1.2.1 Qualifications/certifications. Submit the Coating Tech Rep's qualifications/certifications in accordance with SFLC Std Spec 0000, 3.2.4.2.2.3 and 3.2.4.2.4, include name, certificate number and documented completion of relevant AMPP (NACE/SSPC) Courses and Exams.

3.1.2.1.1 Submit the name and the certification of the Tech Rep to the COR at the Arrival Conference. Include the dates of services the Qualified Tech Reps will be on site as per their subcontract documentation.

NOTE

This work item requires the use of an AMPP-Certified Tech Rep. The use of a QP-1 certified company/contractor alone is not sufficient.

3.1.3 Protective measures. The Contractor must furnish and install all protective measures in accordance with SFLC Std Spec 0000, paragraph 3.3.3 (Vessel component, space, and equipment protection).

3.1.4 Interferences. The Contractor must handle all interferences in accordance with SFLC Std Spec 0000, paragraph 3.3.5 (Interferences). Known interferences include, but are not limited to the following:

- TLIs
- Piping, supports, brackets

3.1.5 Temporary access openings. Due to limited access to work areas, the Contractor may, with express permission of the KO (via submission of a CFR), cut access holes to facilitate accomplishment of the work specified herein. Perform all work required to open and close the access openings in accordance with SFLC Std Spec 8636.

3.1.6 Work plan. The Contractor must provide a work plan (preservation plan including protection plan) for the Tank Preservation listed in Table 1 in accordance with SFLC Std 6310, paragraph 3.2 (Preservation Plan) to COR before or on Arrival Conference.

3.1.6.1 Pre-work preservation conference. Prior to the start of any preservation work, the Contractor must facilitate a conference meeting with the KO, COR, Coast Guard Inspector(s), Contractor and Contractor's representative able to speak to technical preservation details and requirements.

- QC/QA Program. The requirements of SFLC Std Spec 0000 3.2.4.2.2.3, Contractor's QC/QA Program (as outlined in SFLC Std Spec 0000, 3.2.4 QC/QA Program),
- Material Receipt Conformance (as outlined in SFLC Std Spec 6310, 3.1.1.2 Material Receipt Conformance),
- Preservation plan (as outlined in SFLC Std Spec 6310, 3.2 Preservation plan), SFLC Std Spec 6310 3.1.1.3.1 and 3.1.9 must be formally reviewed and approved by the KO,
- PDS and SDS. Only submit Manufacturer's Product Data Sheets (PDS) and Safety Data Sheets (SDS) if NAVSEA approved ASTM F718 sheets are not available.

3.1.7 Work coordination. The Contractor must coordinate the accomplishment of this work item with the following work items(s):

- Tanks (Potable Water), Clean and Inspect

3.2 In-process quality control measures. The Contractor must abide by all the safety, preservation, and quality control requirements specified in SFLC Std Spec 0000, paragraph 3.2.4.2 (In-process QC measures for “critical-coated surfaces”). Surfaces being preserved are considered “critical-coated surfaces”. QA Forms and NACE III Reports must be submitted to the COR for review no later than 24 hours after completion of work.

3.2.1 Daily reports. At the conclusion of each work day coating has been applied, the Contractor must provide Daily Reports generated and signed by the Coating Tech Rep. Daily reports must summarize work accomplished that current day, work to be accomplished the following day, any and all materials used during work that day, any and all readings taken and/or data collected (i.e. environmental readings, DFT, WFT, etc…) identifications of work locations, time and type of any inspections conducted with the results of such inspection(s) and must also include descriptions any events of non-conformance in relation to the specification, applicable references, standards, and technical data sheets (i.e ASTM F718s).

3.2.2 Environmental readings. Environmental readings must be accomplished within the agreed upon hours according to the interval outlined in SFLC Std Spec 6310, Appendix D3.1.

3.3 Ventilation requirements. The Contractor must accomplish all requirements of SFLC Standard Spec 6310, 3.1.16 (Ventilation requirements for confined spaces) and SFLC Standard Specification 0000, 3.3.1.1 (Temporary ventilation) throughout the entirety of this work item.

3.4 Surface preservation. The Contractor must prepare and coat 33% of all tank interior surfaces (including internal surfaces of manhole cover(s), manhole cover hull ring(s) extending outward to the weld line that ties the hull ring into the tank plating on the tank exterior).

3.4.1 Power tool clean all affected surfaces to “bare metal” in accordance with SSPC-SP 11, in lieu of using abrasive blasting; and feather edges of existing intact coating to the prepared areas, in order to provide a smooth transition with the new paint.

3.4.2 Inspection. The Contractor must inspect all cleaned surfaces and exposed substrates of areas in tanks listed in Table 1 (after removing/cleaning surface covering/coatings and prior to priming substrates) in accordance with SFLC Std Spec 6310 3.1.8.1 Surface cleanliness evaluation – visual standards. Submit a CFR.

3.4.3 The Contractor must coat the prepared surfaces using the system specified for "Tanks and Voids (Potable Water Tanks)" in SFLC Std Spec 6310, Appendix B (Cutter and Boat Interior Painting Systems). Select finish/top coat color to match existing adjacent surfaces.

3.5 Waste and debris removal. The Contractor must remove all waste and debris generated by the tank preservation process (surface preparation, substrate cleaning, priming, and coating). Waste and debris must be disposed of in accordance with SFLC Std Spec 6310, paragraph 3.1.8.2 (Debris removal and disposal), SFLC Std Spec 0000, and all applicable Federal, state, and local laws, ordinances and regulations.

3.6 Touch-up preservation. The Contractor must prepare and coat all new and disturbed surfaces to match existing adjacent surfaces in accordance with SFLC Std Spec 6310, paragraph 3.1.13 (Touch-ups and minor coating repairs).

4. NOTES

This section is not applicable to this work item

WORK ITEM 13: Deck Covering (Ceramic Tile), Renew

1. SCOPE

1.1 Intent. This work item describes the requirements for the Contractor to remove damaged decking system and renew with ceramic tile deck covering system (and fully preserve decks inside coamings) in compartments/areas as listed in Table 1.

TABLE 1 DECKING SYSTEM PARTICULARS

LOCATION	DECK MTL	AREA (SQFT)*	SYSTEM/APPENDIX (SFLC STD 6341)	SYSTEM COLOR	TRIM UNITS**	NOTE
Scullery 1-52-1-Q	Steel	127	Ceramic Tile/Appendix B Wear Resistant Deck Tile (MIL-PRF-32170, Type I, Class 1)	Quarry Tiles 6x6 x1/2" Standard Grade, Abrasive-Grooved, Red Oxide	Yes	Renew with Underlayment (MIL-PRF-3135H, Type I/II Class 2)

****See SFLC Std Spec 6341 for cove base requirements**

1.2 Government-furnished property.

None.

2. REFERENCES

COAST GUARD DRAWINGS

Coast Guard Drawing 418A-WMSL-100-001, Rev B, General Arrangements

Coast Guard Drawing 418A-WMSL-801-001, Rev A, Booklet of General Plans

Coast Guard Drawing 750-WMSL-651-002, Rev C, Scullery Arrangement (ASC651002)

COAST GUARD PUBLICATIONS

Surface Forces Logistics Center Standard Specification 0000 (SFLC Std Spec 0000), 2022, General Requirements

Surface Forces Logistics Center Standard Specification 0740 (SFLC Std Spec 0740), 2022, Welding and Allied Processes

Surface Forces Logistics Center Standard Specification 6310 (SFLC Std Spec 6310), 2022, Requirements for Preservation of Ship Structures

Surface Forces Logistics Center Standard Specification 6341 (SFLC Std Spec 6341), 2022, Install Interior Deck Covering Systems

OTHER REFERENCES

American National Standards Institute (ANSI) A137.1, 2022, Standard Specification for Ceramic Tile

American Society for Nondestructive Testing (ASNT), Recommended Practice No. SNT-TC-1A, 2024, Personnel Qualification and Certification in Nondestructive Testing

American Society for Nondestructive Testing (ASNT), Standard No. ANSI/ASNT CP-189-2024, 2024, ASNT Standard for Qualification and Certification of Nondestructive Testing Personnel

American Welding Society (AWS) B1.10M/ B1.10, 2016, Guide for Nondestructive Examination of Welds

American Welding Society (AWS) B1.11M/B1.11, 2015, Guide for the Visual Examination of Welds

American Welding Society (AWS) D1.1/D1.1M, 2025, Structural Welding Code – Steel

ASTM Internationals (ASTM) G46-21, 2021, Standard Guide for Examination and Evaluation of Pitting Corrosion

MIL-PRF-24176C, 2020, Cement, Epoxy, Metal Repair and Hull Smoothing

MIL-PRF-24667D, 2021, Coating System, Non-Skid, for Roll, Spray, or Self-Adhering Application

MIL-STD-1689A, 1990, Fabrication, Welding, and Inspection of Ships Structure

Tile Council of North America, Inc. (TCNA), TCNA 2024, 2024, Handbook for Ceramic, Glass, and Stone Tile Installation

The Society for Protective Coatings (SSPC) Surface Preparation Specification No.3 (SSPC-SP 3), 2024, Power Tool Cleaning

The Society for Protective Coatings (SSPC) Surface Preparation Specification No.11 (SSPC-SP 11), 2020, Power Tool Cleaning to Bare Metal

The Society for Protective Coatings (SSPC)/NACE International (NACE) Joint Surface Preparation Standard SSPC-SP 10 (WAB)/NACE WAB-2, 2015, Near-White Metal Wet Abrasive Blast Cleaning

3. REQUIREMENTS

3.1 General.

3.1.1 CIR. The Contractor must submit a CIR for the inspections listed in the following paragraph(s) :

None.

3.1.2 Tech Rep. The Contractor must provide the services of Tech Reps and personnels as follows :

None.

3.1.3 Protective measures. The Contractor must furnish and install all protective measures in accordance with SFLC Std Spec 0000, paragraph 3.3.3 (Vessel component, space, and equipment protection).

3.1.3.1 Specific protections. Specific areas/equipment/ components to be protected include, but are not limited to:

- Machinery and equipment (e.g. scullery & galley machinery and equipment, and shelves)
- Vent systems (e.g. trunks, ducts, and pipes)
- Drains, covers, and plugs

3.1.3.2 Deck drains. Plug or cover all deck drains, weather deck supply and discharge ducting to prevent entry of blast grit or debris.

3.1.4 Interferences. The Contractor must handle all interferences as listed below in accordance with SFLC Std Spec 0000, paragraph 3.3.5 (Interferences). Known interferences include, but are not limited to the below listed :

- Machinery and equipment(e.g. scullery & galley machinery and equipment, and shelves)
- Drains and plugs
- Outfits and foundations
- Piping and supports
- Cables and supports

3.1.5 Work locations. The concerned work areas are listed in Table 1. See the Coast Guard Drawings in section 2 above for guidance, locations, and details.

3.1.6 Materials, tools, and services. The Contractor must provide materials, tools, and services to accomplish the requirements in this work item. New components, parts, materials, and paints with the same color, comparable and matching material properties as the existing components/parts. Use references in Sections 1, 2 and SFLC Std Specs for guidance, required materials, and details.

- Follow and refer to TCNA Handbook for Ceramic Tile Installation for any technical information.

3.1.7 Work plan. The Contractor must provide a work plan for renewing the Deck Covering System listed in Table 1 to the COR before or at the arrival conference.

3.1.8 Notification. The Contractor must give written notification to the COR 48 hours before starting work on this work item.

3.2 Inspection In the presence of the Coast Guard Inspector and as designated by the COR, the Contractor must inspect all cleaned surfaces and exposed substrates of areas in Table 1 (after removing/cleaning surface covering/coatings and prior to priming substrates) in accordance with SFLC Std Spec 0740. Submit a CFR.

3.2.1 Visual inspection (VT). The Contractor must visually inspect all exposed deck areas for any pitting, corrosion, erosion, defects, and damages.

3.2.2 Pit measurement. The Contractor must take 100 pit measurements using a Contractor supplied 'Pit Gauge' in accordance with SFLC Std Spec 0740, Paragraph 3.13 (Evaluation of pitting corrosion). The results of these measurements must be included in the inspection report, showing where pit measurements were taken and the depth of the pit.

NOTE

Pit measurements must be taken on cleaned/exposed substrates in accordance with SFLC Std Spec 0740 (in accordance with ASTM G46 via SFLC Std Spec 0740)

3.2.3 Ultrasonic test (UT). The Contractor must take 100 UT measurements for determining suspected cracks and remaining substrate thicknesses in accordance with SFLC Std Spec 0740, Appendix C. The results of these measurements and the locations where they were taken must be included in the inspection report.

- UT for cracks. Take UT measurements along suspected cracked substrates/discontinuities to determine their boundaries.
- UT for thickness measurement. Take UT shots in the surrounding area of any pit measuring greater than 25% of plate thickness. UT shots must be taken in the four quadrants at an equal-distant radius from the pit center until full plate thickness is measured.

3.3 Substrate filling and fairing by epoxy for shallow pits and small corrosions (i.e. pits < 25% or corrosions < 25%). The Contractor must fill small pin holes, shallow pitted substrates (with remaining plate thicknesses over 75% of required plate thicknesses), and fair corroded substrates (with remaining cross sections over 75% of required cross section areas), with epoxy to delay further corrosions, after removing insulation, surface covering, and/or coating in accordance with SFLC Std Spec 6310, Appendix A (Cutter and Boat Exterior Painting Systems), "Metal Repair and Hull Smoothing", MIL-PRF-24176, and manufacturers' instructions.

- Procure 1 kit of epoxy (e.g. 0.5 Gallon/5 Kg Kit) to conduct repairs.
- Apply remaining epoxy over high corrosion and erosion areas. (e.g. substrates repaired by clad welding, corners, edges, sills, welding seams, and high contact surfaces)

3.4 Deck covering installation. The Contractor must accomplish all tasks required in SFLC Std Spec 6341, and follow TCNA Handbook for Ceramic Tile Installation or manufacturer's installation instruction, to install a new covering system in the location listed in Table 1, by using Epoxy Underlayment (MIL-PRF-3135 Type I/II Class 2).

3.4.1 Removal. The Contractor must remove and scrap all existing deck covering systems and underlayment materials from the specified work area(s) to expose the deck surfaces. Disposal must be in accordance with all local, state, and federal laws and regulations.

3.4.2 Cleaning. The Contractor must clean the surfaces of all decks including decks inside coamings and all adjacent structural members (e.g. foundations, supports, outfits, and coamings) in accordance with SSPC-SP 10 (WAB)/NACE WAB-2, SSPC-SP 10/NACE No. 2 with dust control, or SSPC-SP 11. Surfaces must be completely free of corrosion products, mill scale, dirt, oil, grease, moisture, deteriorated paint, and other surface contaminants.

3.4.3 Priming. The Contractor must prime the prepared surfaces with recommended or equivalent primer in manufacturers' installation instruction/guideline in section 2.

3.4.4 Underlayment. The Contractor must install Epoxy Underlayment (MIL-PRF-3135, Type I/II Class 2) on the primed surface in accordance with SFLC Std Spec 6341 and manufacturers' installation instruction/guideline in section 2 above.

- Insulation. Install the same but thicker underlayment of 1/2 to 3/4 inch on the primed surface

over tanks and hot machinery spaces instead of insulating underlayment where specified or required.

- Draining. Make sloping surface areas near each deck drainage for proper draining.
- Slope test. Op test the slope to validate proper and satisfactory sloping to drainage.

3.4.5 Waterproof membrane. The Contractor must apply a waterproof membrane meeting the requirements of commercial standard ANSI A118.10 to wet or semi-wet areas supplementally.

- Ensure that the waterproof membrane must be certified by the manufacturer to be compatible with both the underlayment and the installed deck covering.
- The membrane must be one continuous barrier covering the entire deck, including the cove base 4 inches up each vertical surface and be installed in accordance with the manufacturer's instruction.

3.4.6 Ceramic tile. The Contractor must install the designated ceramic tiles (ANSI A137.1), over deck underlayment or coated deck surfaces in accordance with SFLC Std Spec 6341 and TCNA Handbook for Ceramic Tile Installation in Section 2.

3.4.7 Trim units. The Contractor must install 4-inch high base ceramic tile trim units (bullnosed at the top edge and coved at the bottom edge) at all vertical projections through the deck. Install bullnosed trim units around depressions in the deck, and rounded internal and external matching corner units.

3.4.8 Grouting. The Contractor must prepare and apply a suitable epoxy grout material to fill all joints even with the surface of the tiles, after the tiles have been firmly set in place.

3.4.9 Surface cleanliness. Upon completion of tile installation and grouting, the Contractor must ensure that all tile surfaces are clean and free of grout and other debris.

3.5 Surface preservation. The Contractor must prepare, prime and paint all surfaces as follows :

3.5.1 Deck areas. The Contractor must prepare and coat the surfaces of decks inside coamings including all adjacent structural members (e.g. foundations, supports, outfits, and coamings), using the system specified in SFLC Std Spec 6310, Appendix B (Cutter and Boat Interior Painting Systems). Apply finish/top coat color to match existing adjacent surfaces. Select options as follows :

- Decks, Metal Interior and Non-Skid Areas (Metal Decks – No application of deck coverings)
- Near-White Metal Wet Abrasive Blast Cleaning SSPC-SP 10 (WAB)/NACE WAB-2, or
- Power Tool Cleaning to Bare Metal (SSPC-SP 11) for limited access areas

3.5.1.1 Preserve all closures, coamings, foundations, supports, and outfits including all adjacent structural members up all coaming heights and up to 6 inches above deck.

3.5.1.2 Install space heaters and ventilators in each location to aid in curing paint.

3.5.2 Touch-up preservation. The Contractor must prepare and coat all new and disturbed surfaces to match existing adjacent surfaces in accordance with SFLC Std Spec 6310, Paragraph 3.1.13 (Touch-ups and minor coating repairs).

3.6 CFR. The Contractor must submit a CFR to the COR if additional repairs are required.

4. NOTES

FIGURE 1 SAMPLE SCULLERY 1-52-1-Q

WORK ITEM 14: Piping and Ducting Insulation, Renew

1. SCOPE

1.1 Intent. This work item describes the requirements for the Contractor to renew piping and ducting insulation listed in Table 1, below:

TABLE 1- INSULATION RENEWAL LIST

LOCATION	SYSTEM	APPROX. QUANTITY	NOTES	COAST GUARD DRAWING
2-76-5-Q SSDG #3 Ships Service Diesel Generator Room	Chill water piping	100 linear feet, 5" Pipe	Supply and Return Piping	750-WMSL-516-17
3-22-0-Q AC Equipment Room	Chill water piping	110 linear feet, 5" Pipe	Supply and Return Piping	750-WMSL-516-06
2-28-1-1-Q Water mist pump Station #1	Chill water piping	60 linear feet, 4" Pipe	Supply and Return Piping	750-WMSL-516-07
2-76-5-Q SSDG #3 Ships Service Diesel Generator Room	HVAC Ducting	20 Square Feet		750-WMSL-512-040

1.2 Government-furnished property.

None.

2. REFERENCES

COAST GUARD DRAWINGS

Coast Guard Drawing 750-WMSL-100-90, Rev A, General Arrangements NSC 7 and follow (ASC1700001)

Coast Guard Drawing 750-WMSL-508-1, Rev C, Piping and Machinery Insulation Schedule and L/M (ASC508001)

Coast Guard Drawing 750-WMSL-509-001, Rev A, HVAC Insulation Schedule and L/M

Coast Guard Drawing 750-WMSL-512-040, Rev G, Vent & Air Cond Arr 2nd deck UNIT 3230 (ASC512323)

Coast Guard Drawing 750-WMSL-514-1, Rev C, Chilled Water System Schematic (ASC514014)
Coast Guard Drawing 750-WMSL-516-06, Rev F, Chilled Water Unit 1320 (ASC516132-CW)
Coast Guard Drawing 750-WMSL-516-07, Rev C, Chilled Water Unit 1330 (ASC516133-CW)
Coast Guard Drawing 750-WMSL-516-17, Rev C, Chilled Water Unit 3220 (ASC516323-CW)

COAST GUARD PUBLICATIONS

Surface Forces Logistics Center Standard Specification 0000 (SFLC Std Spec 0000), 2022, General Requirements

Surface Forces Logistics Center Standard Specification 6310 (SFLC Std Spec 6310), 2022, Requirements for Preservation of Ship Structures

OTHER REFERENCES

ASTM International (ASTM) F683, 2003, Standard Practice for Selection and Application of Thermal Insulation for Piping and Machinery

3. REQUIREMENTS

3.1 General.

None.

3.1.2 Tech Rep.

Not applicable.

3.1.3 Protective measures. The Contractor must furnish and install all protective measures in accordance with SFLC Std Spec 0000, paragraph 3.3.3 (Vessel component, space, and equipment protection).

3.1.4 Interferences. The Contractor must handle all interferences in accordance with SFLC Std Spec 0000, paragraph 3.3.5 (Interferences). Known interferences include, but are not limited to the following:

- Pipe brackets and supports
- Equipment and Machinery in Spaces
- Miscellaneous piping components, i.e. valves, gages, etc.
- Electrical cables

3.1.5 The Coast Guard Inspector will identify insulation for renewal listed on Table 1 to the Contractor.

NOTE
Although pipe lengths, routes, and sizes are detailed in the specified drawings, the as-built configuration may vary slightly in routes, lengths, and sizes.

3.1.6 Work coordination

NOTE

Coast Guard personnel will operate all shipboard machinery and equipment.

3.2 Operational test, initial. Prior to commencement of work, the Contractor must witness Coast Guard personnel perform an initial operational test of all items or shipboard devices to be disturbed, used, repaired, or altered, to demonstrate existing operational condition. Submit a CFR.

NOTE

Coast Guard personnel will operate all shipboard machinery and equipment.

3.3 Renew insulation. The Contractor must renew the insulation for items listed on Table 1. Use Coast Guard Drawings provided on section 2 of this work item for guidance.

3.3.1 With the aid of ship's force, secure chilled water flow in the piping sections where lagging is to be applied for the duration of the lagging renewal. Allow piping to warm to at least 60 deg. F (or ambient air temperature, whichever is cooler) before applying any paint or lagging.

3.3.2 Removal. Remove all existing insulation material over the designated surfaces, including associated pipe hangers, valves, fittings, and flanges. Dispose of all removed materials in accordance with all applicable Federal, state, and local regulations.

NOTE

Other surfaces/fittings affected may include: brackets, bulkhead penetrations, flat work, and all other protrusions or fixtures that will condense due to relative humidity from surrounding atmosphere.

3.3.3 The Contractor must install new insulation materials over the exposed pipe surfaces at thicknesses appropriate to the application and temperature ranges specified in Dwg 750-WMSL-508-001. Provide insulation for:

- Valves
- Fittings
- Flanges
- Pipes

3.5 Ducting insulation installation. The Contractor must install new insulation material over the exposed duct surfaces as shown on Coast Guard DWG 750-WMSL- 509-1.

3.6 Paint the newly installed insulation system, in accordance with the SFLC Std Spec 6310, using the system specified for "Insulation Surfaces, Fiberglass Sheet/Closed Cell PVC Foam" in Appendix B (Cutter and Boat Interior Paint Systems).

3.7 Stencil system and flow directions. The Contractor must apply system marking to stencil system designator and flow direction on renewed sections of pipe insulation. Match existing text size and paint color.

3.8 Operational test, post repairs. After completion of work, the Contractor must thoroughly test, in the presence of the Coast Guard Inspector and demonstrate all items or shipboard devices that have been disturbed, used, repaired, altered, or installed to be in satisfactory operating condition. Submit a CFR.

4. NOTES

This section is not applicable to this work item.

WORK ITEM 15: Dewatering Overboard Discharge Connections, Install

1. SCOPE

1.1 Intent. This work item describes the requirements for the Contractor to install four dewatering overboard discharge connections listed in Table 1 to serve Electric Submersible Pumps and Peri Jet Eductors.

TABLE 1 – DEWATERING OVERBOARD DISCHARGE CONNECTION LOCATION

SYSTEM	LOCATION	COAST GUARD DRAWING
Portable Pump Overboard Discharge (2-50-1)	Rescue Station (2-48-1-Q)	750-WMSL-529-501 (Plan View 22-C and Section 11-A)
Portable Pump Overboard Discharge (2-20-2)	Passage Way (2-16-1-L)	750-WMSL-529-501 (Plan View 19-C and Section 11-A)
Portable Pump Overboard Discharge (2-65-2)	Water Mist Pump Station (2-64-4-Q)	750-WMSL-529-501 (Plan View 22-A and Section 11-A)
Portable Pump Overboard Discharge (2-29-1)	Water Mist Pump Station (2-28-1-Q)	750-WMSL-529-501 (Plan View 19-A and Section 11-A)

1.2 Government-furnished property.

None.

2. REFERENCES

COAST GUARD DRAWINGS

Coast Guard Drawing 418A-WMSL-100-001, Rev B, General Arrangements

Coast Guard Drawing 418A-WMSL-100-006, Rev A, Inboard and Outboard Profiles

Coast Guard Drawing 750-WMSL-529-501, Rev B, Dewatering Ovbd Discharge Connections

Coast Guard Drawing 750-WMSL-635-001, Rev (-), Thermal & Acoustic Insulation (ASC635001)

Coast Guard Drawing 750-WMSL-635-002, Rev K, Insulation ARR & Details Thermal, Acoustic, & Fire (ASC635002)

COAST GUARD PUBLICATIONS

Surface Forces Logistics Center Standard Specification 0000 (SFLC Std Spec 0000), 2022, General Requirements

Surface Forces Logistics Center Standard Specification 0740 (SFLC Std Spec 0740), 2022, Welding and Allied Processes

Surface Forces Logistics Center Standard Specification 6310 (SFLC Std Spec 6310), 2022, Requirements for Preservation of Ship Structures

OTHER REFERENCES

Military Specification MIL-DTL-15024, November 1997, General Specification for Plates, Tags, and Bands for Identification of Equipment

3. REQUIREMENTS

3.1 General.

3.1.1 CIR.

None.

3.1.2 Tech Rep.

None.

3.1.3 Protective measures. The Contractor must furnish and install all protective measures in accordance with SFLC Std Spec 0000, paragraph 3.3.3 (Vessel component, space, and equipment protection).

3.1.4 Interferences. The Contractor must handle all interferences in accordance with SFLC Std Spec 0000, paragraph 3.3.5 (Interferences). Known interferences include, but are not limited to the following:

- Piping
- Insulation

3.2 Welding and Brazing. The Contractor must perform all welding, brazing, and non-destructive testing (NDT) in accordance with SFLC Std Spec 0740.

3.3 Material and Equipment. The Contractor must provide all material listed on Coast Guard Drawing 750-WMSL-529-501 for installation of four dewatering overboard discharge connections. The Contractor must also provide all equipment and tooling necessary for the installation. This includes floats, man-lift, and/or scaffolding for work over the side of the vessel.

3.3.1 Piece #12 (Adapter) will not be installed; it will be stored in the cutters damage control locker for use with the Peri-jet Eductor. Turn all these adapters over to the CG Inspector.

3.4 Locations. The Contractor must identify and mark the affected areas of work, with the CG Inspector, using Coast Guard Drawings 418A-WMSL-100-001 and 750-WMSL-529-501 as guidance.

3.4.1 New installation must not interfere with the use of existing equipment/fittings and allow for unobstructed installation of dewatering equipment. Minor deviations in location may be authorized to ensure a clear path for the installation of dewatering equipment and/or to avoid creating an interference. Submit CFR for deviation authorization.

3.5 Dewatering Overboard Discharge Connection Installation. The Contractor must install dewatering overboard discharge connections, as shown on Table 1, in accordance with Coast Guard Drawing 750-WMSL-529-501.

3.6 NDE & Boundary Test. Upon completion of each installation, the Contractor must perform the following on all new welds. All tests to be performed in the presence of a CG Inspector. Submit CFR with test results.

3.6.1 NDE. Perform an NDE in accordance with SFLC Std Spec 0740 Appendix C2.4.4.

3.6.2 Boundary Test. Perform a boundary test in accordance with SFLC Std Spec 0740 Appendix C C2.2.2 or C2.2.3.

3.7 Pipe Preservation. Upon successful boundary test, the Contractor must prepare and coat the steel pipe.

3.7.1 External. Preserve the external surfaces of the new piping using the system specified for "Piping, Interior (Piping, Insulated and Uninsulated, Under 200ºF)" Appendix B in SFLC Std Spec 6310. Do not paint bronze, brass, or stainless-steel fittings or hardware.

3.7.2 Internal. Preserve the internal surfaces of the new piping using the system specified for "Freeboard/Superstructure/Mast" Option 1, Appendix B in SFLC Std Spec 6310.

3.8 Insulation. The Contractor must install new insulation in the areas of work in accordance with Coast Guard Drawing 750-WMSL-635-001 and 750-WMSL-635-002.

3.8.1 Preserve the newly installed insulation in accordance with SFLC Std Spec 6310, Appendix B for "Insulation Surfaces". Color is to match adjacent insulation.

3.9 Label plate. The Contractor must install new label plates in accordance with Coast Guard Drawing 750-WMSL-529-501 and MIL-DTL-15024.

3.10 Hull Coating Repair. The contractor must repair the damaged coating around each installation in accordance with SFLC Std Spec 6310 3.1.13 using the coating system in Appendix A for 'Freeboard/Superstructure/Mast" Option 1. Topcoat color to match adjacent coating (White 17925).

3.11 Touch-up preservation. The Contractor must prepare and coat all new and disturbed surfaces to match existing adjacent surfaces in accordance with SFLC Std Spec 6310, paragraph 3.1.13 (Touch-ups and minor coating repairs).

4. NOTES

This section is not applicable to this work item.

WORK ITEM 16: Flight Deck Floodlight Transformer, Motor Driven-Auto, Relocate

APM: Do not edit any part of the Work Item Title.

1. SCOPE

1.1 Intent. This work item describes the requirements for the Contractor to relocate Flight Deck Floodlight Motor Driven Auto Transformers and Connection Boxes listed in Table 1 from Port Hanger (01-52-0-Q) to Passage Way (01-60-1-L).

TABLE 1 – LIST OF FLIGHT DECK FLOODLIGHT TRANSFORMER AND CONNECTION BOX

PART NUMBER	EQUIPMENT	PIECE NO. OF COAST DRAWING: 750 WMSL-802-503	LOCATION
SYM 2586.1	Transformer, Motor Driven: VT 5	1	Port Side Hanger (01-52-0-Q)
SYM 2586	Transformer, Motor Driven: VT 4	2	Port Side Hanger (01-52-0-Q)
581TBT20	Connection Box-20 Term: Brass (62-2-29): Connection Box No.1 (Pauluhn Co)	3	Port Side Hanger (01-52-0-Q)
568TBT10	Connection Box-10 Term: Brass (62-2-28): Connection Box No.2 (Pauluhn Co)	4	Port Side Hanger (01-52-0-Q)
SYM 2586.3	Transformer, Motor Driven: VT 6	5	Port Side Hanger (01-52-0-Q)
SYM 2586	Transformer, Motor Driven: VT 1	6	Port Side Hanger (01-52-0-Q)
SYM 2586	Transformer, Motor Driven: VT 2	7	Port Side Hanger (01-52-0-Q)
SYM 2586	Transformer, Motor Driven: VT 3	8	Port Side Hanger (01-52-0-Q)

1.2 Government-furnished property.

None.

2. REFERENCES

COAST GUARD DRAWINGS

Coast Guard Drawing 418A-WMSL-801-001 Rev B, Booklet of General Plan

Coast Guard Drawing 750-WMSL-100-053, Rev J, Unit 4420 Structure - 01 Level and ABV- FR 52 to FR 67 (ASC100442)

(AS7100001) (UNSIGNED) Coast Guard Drawing 750-WMSL-300-048, Rev C, Unit 4420 - 01 Level FR52 to FR67 Arr of Elect Eqpt (ASC300442)

Coast Guard Drawing 750-WMSL-300-062, Rev F, Electrical Standard Methods Handbook (SP001075)

Coast Guard Drawing 750-WMSL-320-016, Rev F, Power Sys Deck Plan - 01 Level (ASC320009)

Coast Guard Drawing 750-WMSL-512-050, Rev D, Vent & Air Cond Arr 01 Lvl Unit 4420 (ASC512442)

Coast Guard Drawing 750-WMSL-588-002, Rev C, Helo Visual Landing Aids Deck Plan Wiring Diagram (ASC588002)

Coast Guard Drawing 750-WMSL-588-004, Rev C, Helo Visual Landing Aids Elementary Wiring Diagram (ASC588003)

Coast Guard Drawing 750-WMSL-588-510, Rev , Helo Visual Landing Aids Elementary Wiring Diagram Mods

Coast Guard Drawing 750-WMSL-635-001, Rev -, Thermal & Acoustic Insulation (ASC635001)

Coast Guard Drawing 750-WMSL-802-503, Rev-, VLA Lighting Transformer Relocation

COAST GUARD PUBLICATIONS

Surface Forces Logistics Center Standard Specification 0000 (SFLC Std Spec 0000), 2022, General Requirements

Surface Forces Logistics Center Standard Specification 0740 (SFLC Std Spec 0740), 2022, Welding and Allied Processes

Surface Forces Logistics Center Standard Specification 3042 (SFLC Std Spec 3042), 2022, Shipboard Electrical Cable Removal, Relocation, Splice, Repair, and Installation

Surface Forces Logistics Center Standard Specification 6310 (SFLC Std Spec 6310), 2022, Requirements for Preservation of Ship Structures

OTHER REFERENCES

MIL-STD-2003-1, Oct 2020, Electric Plant Installation, Standard Methods for Surface Ships & Submarines (Cable)

MIL-STD-2003-2, Oct 2020, Electric Plant Installation, Standard Methods for Surface Ships & Submarines (Equipment)

MIL-STD-2003-3, Oct 2020, Electric Plant Installation, Standard Methods for Surface Ships & Submarines (Penetrations)

MIL-DTL-24643, Nov 2023, Cables and Cords, Electric, Low Smoke, For Shipboard Use, General Specification for

Code of Federal Regulations (CFR) Title 29, Part 1915, Subpart E, Sep 2015, Scaffolds, Ladders and Other Working Surfaces

IEEE Standard 45.6-2016, IEEE Recommended Practice for Electrical Installations on Shipboard – Electrical Testing

3. REQUIREMENTS

3.1 General.

3.1.1 CIR. The Contractor must submit a CIR for the inspections listed in the following paragraph(s).

None.

3.1.2 Tech Rep.

Not Applicable.

3.1.3 Protective measures. The Contractor must furnish and install all protective measures in accordance with SFLC Std Spec 0000, paragraph 3.3.3 (Vessel component, space, and equipment protection).

3.1.4 Interferences. The Contractor must handle all interferences in accordance with SFLC Std Spec 0000, paragraph 3.3.5 (Interferences). Known interferences include, but are not limited to the following:

- Bulkhead insulation
- Piping
- Electrical wiring
- Overhead Lights
- Ladders

3.2 Scaffolding. The Contractor must, in accordance with CFR Title 29, Part 1915, Subpart E, erect suitable staging or scaffolding as required to facilitate work.

3.3 Welding. The Contractor must conform to all welding requirements specified in SFLC Std Spec 0740.

3.4 NDI. The Contractor must perform NDI on new welds in accordance with SFLC Std Spec 0740, Appendix C.

3.5 Operational test - initial. Prior to commencement of work, the Contractor must witness Coast Guard personnel perform an initial operational test of the visual landing aid systems, including dimmer control, to demonstrate existing operational condition. Submit a CFR.

3.6 Electrical requirements. The Contractor must accomplish all electrical work in accordance with SFLC Std Spec 3042. Existing wire ways must be utilized for new cable runs unless otherwise approved by the COR.

3.6.1 Cable inspection. Disconnect existing cable from variable transformer connection and lighting terminal boards and test cable insulation resistance in accordance with IEEE Std 45.6. Inspect and document the condition of cable, terminals, and penetrations from end to end. Determine proposed routing for cable for transformer connection in new location. Submit a CFR.

3.6.2 Run new cables in existing cableways, hangers, and bulkhead penetrations. Install electrical cable stuffing tubes, kick pipes, multi cable penetrations, and fire sealant in accordance with MIL-STD-2003-3B for surface ships.

3.6.3 Install cable tags on all new and rerouted cables in accordance with SFLC Std Spec 3042. Tags must be located at equipment cable entrances and on each side of a deck or bulkhead penetration.

3.6.4 If required or directed to replace cable by the COR, new cables must be of unarmored construction with low smoke insulation conforming to MIL-DTL-24643, specifications in accordance with CG drawing 750-WMSL-588-002. Each cable must be continuous from terminal end to terminal end with no splicing permitted.

3.6.5 New wires grouped in harnesses and single wires more than 12 inches in length must be marked for identification. Marking may be accomplished by stamping the identification symbol on the wire insulation, by sliding a sleeve type wire marker over the wire insulation. Marking must be applied in a permanent manner, resistant to water, heat, oil, and abrasion.

3.6.6 Penetrations into electrical enclosures may be through a watertight connector in accordance with MIL-STD-2003-1.

3.6.7 Labeling. Label and information plates must be of laminated phenolic with inner and outer layers of contrasting colors to match similar existing markings. Outer layers must normally be colored black, white, or gray. Inner layers (exposed through engraving) must be a contrasting white or black. Install labels plates on all new equipment and devices.

3.6.8 Cable entrances to splash proof, spray tight, and watertight enclosures must be through plastic stuffing tubes in accordance with MIL-STD-2003-3B.

3.7 Transformer and terminal box removal. Disconnect and remove variable transformers and terminal boxes from existing location in portside of the Hangar (01-52-1-Q) in accordance with CG drawing 750-WMSL-802-503. Remove and grind down the surface of stand-offs. Conduct hot work in accordance with work control requirements of SFLC Std Spec 0000.

3.7.1 After disconnection of the transformer, test insulation resistance for each transformer between an input lead and the enclosure. Submit a CFR.

3.7.2 Inspect all connections inside terminal boxes, including terminations, terminal boards, and penetrations. Make note of any which will require repair on re-installation. Retain stuffing tubes and hardware unless damaged during the removal process. Submit a CFR.

3.8 Transformer installation. Connect and install variable transformers in the passageway (01-60-1-L) in accordance with drawing 750-WMSL-802-503. Electrical connections must be made in accordance with drawing 750-WMSL-588-004, and terminations in accordance with SFLC Std Spec 3042.

3.8.1 Pattern bolted connections for each transformer and terminal box in new installation locations, and install standoffs for bolted connections on the bulkhead.

3.9 Stuffing tube installation. The Contractor must supply and install any new bulkhead penetrations for cable as required in accordance with the MIL-STD-2003-3B and SFLC Std Spec 0740.

3.9.1 The Contractor must identify location for any new bulkhead penetrations needed prior to cutting or installation. Submit a CFR.

3.10 Work location. The work locations are listed in Table 2. See the drawings in section 2 for guidance, locations, and details.

TABLE 2: - WORK LOCATION

COMPARTMENT	LOCATION
Port Hanger	01-52-0-Q
STBD Hanger	01-52-1-Q
Aviation Workshop	01-59-1-Q
Helo Control Station	02-66-0-C

COMPARTMENT	LOCATION
Passageway	01-60-1-L

3.11 Materials. The Contractor must ensure all material listed on Coast Guard Drawing 750-WMSL-802-503 is available for modification or to renew as needed.

3.11.1 The Contractor must provide miscellaneous hardware required for electrical installation (i.e. Nylon Stuffing Tubes, Box Connectors, Lugs, Fasteners, Wire Nuts, Tapes, Cable ties & Cable Mounting Brackets, etc) of the electrical equipment.

3.12 Cable removal. The Contractor must disconnect and coil up cables listed in Table 3 as shown in Coast Guard Drawing 750-WMSL-588-004 in accordance with SFLC Std Spec 3042. Record wiring information of each cable and submit a CFR. Re-install the removed cables at new location. Record any cables which are not suitable for re-installation and need to be replaced. Submit a CFR.

3.12.1 Before removing the cables listed in Table 3, the Contractor must tag and identify each cable for Coast Guard Inspector approval, and document connection points on all components removed.

TABLE 3 – LIST OF CABLES

LENGTH (APPROX.)	CABLE NO/TYPE	FROM	TO	DRAWING: 750-WMSL-588-004	REMARKS
125 Feet	K-FL13/ SMSCU-19	VLA Light Control Panel (02-66-0-C)	Connection Box No.1 (01-52-0-Q)	Sheet 1	Remove Existing Cable & re-install Cable
125 Feet	K-FL25/LSTSGU-9	VLA Light Control Panel (02-66-0-C)	Variable Transformer: VT-5 (01-52-0-Q)	Sheet 1	Remove Existing Cable & re-install Cable
125 Feet	K-FL15/LSTSGU-23	VLA Light Control Panel (02-66-0-C)	Connection Box No.2 (01-52-0-Q)	Sheet 1	Remove Existing Cable & re-install Cable
125 Feet	K-FL14/LSTSGU-22	VLA Light Control Panel (02-66-0-C)	Connection Box No.2 (01-52-0-Q)	Sheet 1	Remove Existing Cable & re-install Cable
125 Feet	K-FL23/LSTSGU-4	VLA Light Control Panel (02-66-0-C)	Variable Transformer: VT-3 (01-52-0-Q)	Sheet 1	Remove Existing Cable & re-install Cable
125 Feet	K-FL22/LSTSGU-4	VLA Light Control Panel (02-66-0-C)	Variable Transformer: VT-2 (01-52-0-Q)	Sheet 1	Remove Existing Cable & re-install Cable
125 Feet	K-FL24/LSTSGU-4	VLA Light Control Panel (02-66-0-C)	Variable Transformer: VT-4 (01-52-0-Q)	Sheet 1	Remove Existing Cable & re-install Cable
10 Feet	K-FL21/LSTSGU-4	Connection Box No.2 (01-52-0-Q)	Variable Transformer: VT-1 (01-52-0-Q)	Sheet 1	Remove Existing Cable & re-install Cable
10 Feet	K-FL26/LSTSGU-23	Connection Box No.2 (01-52-0-Q)	Variable Transformer: VT-6 (01-52-0-Q)	Sheet 1	Remove Existing Cable & re-install Cable

LENGTH (APPROX.)	CABLE NO/TYPE	FROM	TO	DRAWING: 750-WMSL-588-004	REMARKS
10 Feet	K-FL31/LSTSGU-4	Connection Box No.1 (01-52-0-Q)	Variable Transformer: VT-1 Position Detractor (01-52-0-Q)	Sheet 1	Remove Existing Cable & re-install Cable
10 Feet	K-FL32/LSTSGU-4	Connection Box No.1 (01-52-0-Q)	Variable Transformer: VT-2 Position Detractor (01-52-0-Q)	Sheet 1	Remove Existing Cable & re-install Cable
10 Feet	K-FL33/LSTSGU-4	Connection Box No.1 (01-52-0-Q)	Variable Transformer: VT-3 Position Detractor (01-52-0-Q)	Sheet 1	Remove Existing Cable & re-install Cable
10 Feet	K-FL34/LSTSGU-4	Connection Box No.1 (01-52-0-Q)	Variable Transformer: VT-4 Position Detractor (01-52-0-Q)	Sheet 1	Remove Existing Cable & re-install New Cable
10 Feet	K-FL35/LSTSGU-4	Connection Box No.1 (01-52-0-Q)	Variable Transformer: VT-5 Position Detractor (01-52-0-Q)	Sheet 1	Remove Existing Cable & re-install Cable
10 Feet	K-FL36/LSTSGU-4	Connection Box No.1 (01-52-0-Q)	Variable Transformer: VT-6 Position Detractor (01-52-0-Q)	Sheet 1	Remove Existing Cable & re-install Cable
125 Feet	K-FL03/LSTSGU-4	Connection Box No.2 (01-52-0-Q)	J.B. Box No.1 (Helo VLA Hanger Wash FLDTS (02-66-0-C)	Sheet 1 &2	Remove Existing Cable & re-install Cable
125 Feet	K-FL04/LSTSGU-4	Connection Box No.2 (01-52-0-Q)	Tern Box No.1 (VLA DK SURF FLDLTS (Mounted in Passage Way1-64-0-L)	Sheet 1 & 2	Remove Existing Cable & re-install Cable

3.13 Cable installation. After re-locating transformers and connection boxes at Passageway (01-60-1-L), the Contractor must re-install previously removed cables in accordance with Coast Guard Drawing 750-WMSL-588-004, 750-WMSL-588-510, SFLC Std Spec 3041 and 3042. Terminate each cable to devices in presence of the Coast Guard Inspector.

3.14 Insulation renewal. The Contractor must renew damaged lagging material as shown on Coast Guard Drawing 750-WMSL-635-001. Coat the newly installed insulation using the system specified for "Insulation Surfaces, Fiberglass Sheet/Closed Cell PVC Foam" in SFLC Std Spec 6310.

NOTE

Coast Guard personnel will operate all shipboard machinery and equipment.

3.15 Touch-up preservation. The Contractor must prepare and coat all new and disturbed surfaces to match existing adjacent surfaces in accordance with SFLC Std Spec 6310, paragraph 3.4.13 (Touch-ups and minor coating repairs.).

4. NOTES

4.1 Images. Photographs of existing and new locations are provided in Figures 1 and 2 for reference during the installation.

FIGURE 1: EXISTING TRANSFORMER & CONNECTION BOX AT PORT HANGER (01-52-0-Q)

FIGURE 2: TRANSFORMER & CONNECTION BOX RELOCATED AT PASSAGEWAY (01-60-1-L) ON CGC STRATTON

WORK ITEM 17: Hydraulic System Quick Disconnect, Install

1. SCOPE

1.1 Intent. This work item describes the requirements for the Contractor to install quick disconnects on the Hydraulic Power Units (HPU) servicing the bow thruster, anchor windlass, gas turbine hydraulic starter, stern gate, folding boom crane and steering gear.

1.2 Government-furnished property.

None

2. REFERENCES

COAST GUARD DRAWINGS

Coast Guard Drawing 418A-WMSL-556-003, Rev A, Bow Thruster HPU Filter Cart Quick Connections

Coast Guard Drawing 418A-WMSL-556-003, Rev -, Anchor Windlass HPU Filter Cart Quick Connections

Coast Guard Drawing 418A-WMSL-556-005, Rev -, GT Hydraulic Start HPU Filter Cart Quick Connections

Coast Guard Drawing 418A-WMSL-556-006, Rev-, Stern Gate HPU Filter Cart Quick Connections

Coast Guard Drawing 418A-WMSL-583-001, Rev -, Folding Boom Crane HPU Filter Cart Quick Connections

Coast Guard Drawing 750-WMSL-556-505, Rev -, Steering Gear Hydraulic Filter Cart Quick Connections

Coast Guard Drawing 750-WMSL-556-072, Rev -, Gas Turbine Hydraulic Starting Module Hydraulic Diagram.

Coast Guard Drawing 750-WMSL-556-080, Rev-, Three Folding Boom Crane Hydraulic Diagram

COAST GUARD PUBLICATIONS

Coast Guard Technical Publication (TP) 7182, 2025, Steering Machinery Subsystem – Operation & Maintenance Manual

Coast Guard Technical Publication (TP) 7183, 2025, Anchor Windlass – Model 2344A000 – Operational & Maintenance Manual

Coast Guard Technical Publication (TP) 7208, 2021, Stern Gate Model No. 234A00

Coast Guard Technical Publication (TP) 7431, 2026, Bow Thruster – Model TT1100 DPN CP – Mechanical & Hydraulic System – Installation Manual

Surface Forces Logistics Center Standard Specification 0000 (SFLC Std Spec 0000), 2022, General Requirements

Surface Forces Logistics Center Standard Specification 0740 (SFLC Std Spec 0740), 2022, Welding and Allied Processes

Surface Forces Logistics Center Standard Specification 6310 (SFLC Std Spec 6310), 2022, Requirements for Preservation of Ship Structures

OTHER REFERENCES

None

3. REQUIREMENTS

3.1 General.

3.1.1 CIR.

None.

3.1.2 Tech Rep.

Note Applicable

3.1.3 Protective measures. The Contractor must furnish and install all protective measures in accordance with SFLC Std Spec 0000, paragraph 3.3.3 (Vessel component, space, and equipment protection).

3.1.4 Interferences. The Contractor must handle all interferences in accordance with SFLC Std Spec 0000, paragraph 3.3.5 (Interferences).

3.1.6 Fluid handling. The Contractor must remove and dispose of removed fluids from the affected piping system, in accordance with all applicable Federal, state, and local regulations

NOTE

Coast Guard personnel will operate all shipboard machinery and equipment.

3.2 Operational test, initial. Prior to commencement of work, the Contractor must witness Coast Guard personnel perform an initial operational test of all items or shipboard devices to be disturbed, used, repaired, or altered, to demonstrate existing operational condition. Submit a CFR.

3.3. General Guidelines. The following requirements apply to all modifications in this work item.

3.3.1. All welds and NDE must be in accordance with SFLC Std Spec 0740

3.3.2. The Contractor must drain all HPUs prior to conducting the modification. Retain the hydraulic fluid for re-install

NOTE
These are the capacities for the HPU sumps:
Bow Thruster: 60 Gallons
Anchor Windlass: 30 Gallons x 2 Tanks
Gas Turbine Hydraulic Start: 40 Gallons
Stern Gate: 10 Gallons
Folding Boom Crane: 280 Gallons
Steering Gear HPU: 120 Gallons x 2 Tanks

3.3.3. If hot work is required for the modification, then the Contractor is responsible for certifying that the space is safe for hot work and for cleaning the hydraulic tank as required to achieve that certification.

3.3.4. Prior to re-installing the hydraulic fluid, the Contractor must clean the debris they create out of the tank. A Coast Guard Inspector must verify that the debris has been removed prior to re-installation of the hydraulic fluid. Submit a CFR documenting this inspection.

3.3.5. When re-installing the hydraulic fluid, the Contractor must pass the fluid through a three-micron absolute, non-bypass type filter designed specifically for filtering oils and other lubricants.

3.3.6. The Contractor does not need to install the connections onto the hose. They need to assemble those pieces and provide the assembled unit to the Coast Guard. See Figure 1.

3.3.7. Hydrostatic test. After all authorized modifications, the Contractor must hydrostatically test all new piping to 47 psi in accordance with SFLC Std Spec 0740, Appendix C, Hydrostatic Test. The portion that will be attached to the hose can be tested separately, but the portion of the piping that penetrates the tank cover must be tested after the piping has been welded to the cover. Ensure zero leakage from or permanent deformation of pressure-containing parts by repairing all leaks, deformations, and discrepancies. Submit a CFR.

3.3.8. Renew all disturbed gaskets.

3.3.9. Consult the references in Section 2 for more information about these systems.

3.4 Bow Thruster HPU. The Contractor must modify the bow thruster HPU in accordance with Coast Guard Drawing 418A-WMSL-556-003.

3.5 Anchor Windlass HPU. The Contractor must modify the anchor windlass HPU in accordance with Coast Guard Drawing 418A-WMSL-556-004.

3.6 Gas Turbine (GT) Hydraulic Start HPU. The Contractor must modify the GT Hydraulic Start HPU in accordance with Coast Guard Drawing 418A-WMSL-556-005.

3.6 Stern Gate HPU. The Contractor must modify the Stern Gate HPU in accordance with Coast Guard Drawing 418A-WMSL-556-006.

3.7 Folding Boom Crane HPU. The Contractor must modify the Folding Boom Crane HPU in accordance with Coast Guard Drawing 418A-WMSL-583-001.

3.8. Steering Gear HPU. The Contractor must modify the Steering Gear HPU in accordance with Coast Guard Drawing 750-WMSL-556-505.

NOTE

Coast Guard personnel will operate all shipboard machinery and equipment.

3.7 Operational test, post repairs. After completion of work, the Contractor must thoroughly test, in the presence of the Coast Guard Inspector and demonstrate all items or shipboard devices that have been disturbed, used, repaired, altered, or installed to be in satisfactory operating condition. Submit a CFR.

3.10 Touch-up preservation, general. The Contractor must prepare and coat all new and disturbed exterior and interior surfaces, as applicable, to match existing adjacent surfaces in accordance with SFLC Std Spec 6310, paragraph 3.1.13 (Touch-ups and minor coating repairs)

4. NOTES

OBJ

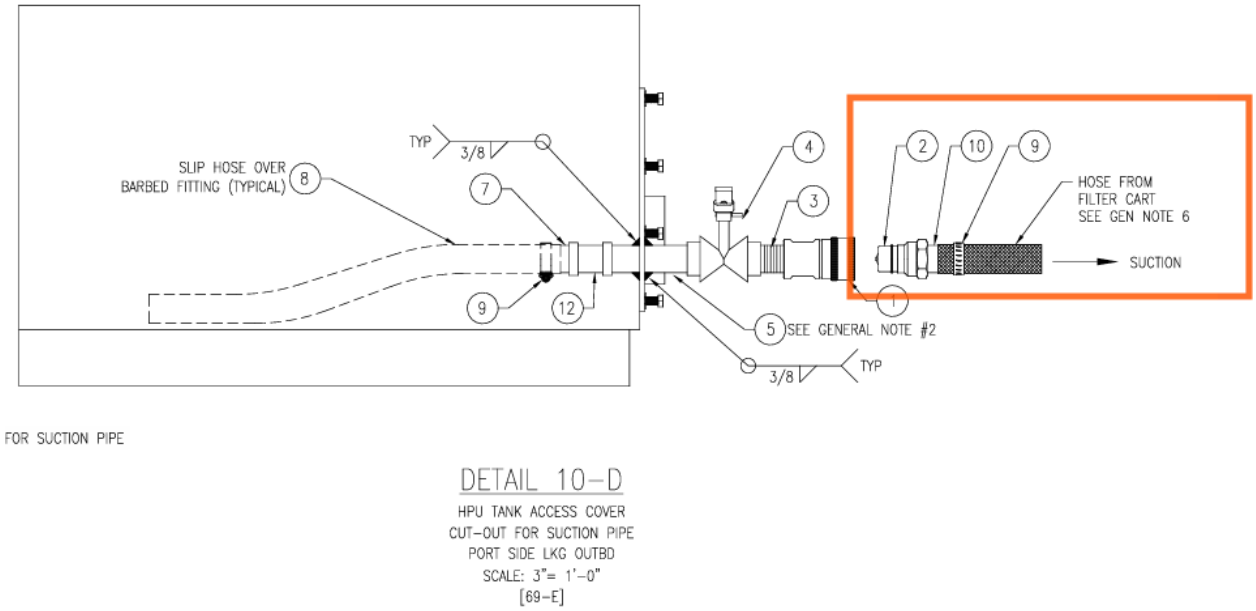

FIGURE 1. PIECES 2, 10 AND 9 ABOVE NEED TO BE PROVIDED TO THE COAST GUARD, BUT THEY DO NOT NEED TO BE ATTACHED TO A HOSE.

WORK ITEM 18: MPAC Demister, Install

1. SCOPE

1.1 Intent. This work item describes the requirements for the Contractor to remove the existing baffle boxes and install new OEM demisters and piping components to the existing #1 and #2 Medium Pressure Air Compressors (MPAC) in the FMMR Upper Level (5-36-01-E) and AMMR Upper Level (5-52-01-E).

1.2 Government-furnished property.

None.

2. REFERENCES

COAST GUARD DRAWINGS

Coast Guard Drawing 418A-WMSL-551-001, Rev A, Compressed Air Diagram
Coast Guard Drawing 418A-WMSL-551-004, Rev B, Compressor Demister Rip-out and Install
Coast Guard Drawing 750-WMSL-551-014, Rev G, Compressed Air Piping & Joint Ident Unit 2120
Coast Guard Drawing 750-WMSL-551-022, Rev F, Compressed Air Piping & Joint Ident Unit 2320
Coast Guard Drawing 750-WMSL-635-001, Rev (-), Thermal & Acoustic Insulation
Coast Guard Drawing 750-WMSL-635-002, Rev K, Insulation Arr & Details Thermal, Acoustic, & Fire

COAST GUARD PUBLICATIONS

Commandant Instruction Manual COMDTINST M10360.3D, January 2014, Coatings and Colors Manual
Surface Forces Logistics Center Standard Specification 0000 (SFLC Standard Spec 0000), 2022, General Requirements
Surface Forces Logistics Center Standard Specification 0740, (SFLC Standard Spec 0740), 2022, Welding and Allied Processes
Surface Forces Logistics Center Standard Specification 6310 (SFLC Standard Spec 6310), 2022, Requirements for Preservation of Ship Structures

OTHER REFERENCES

ASTM International (ASTM) F708, 2022, Standard Practice for Design and Installation of Rigid Pipe Hangers

3. REQUIREMENTS

3.1 General.

3.1.1 CIR.

None.

3.1.2 Tech Rep.

Not applicable.

3.1.3 Protective measures. The Contractor must furnish and install all protective measures in accordance with SFLC Std Spec 0000, paragraph 3.3.3 (Vessel component, space, and equipment protection).

3.1.4 Interferences. The Contractor must handle all interferences in accordance with SFLC Std Spec 0000, paragraph 3.3.5 (Interferences). Known interferences are, but not limited to:

- Insulation
- Piping
- Ventilation ducting
- Equipment
- Tank 5-59-1-F (Aft Oily Water)
- Tank 5-41-1-F (Oily Water Collecting)

3.1.5 Welding requirements. The Contractor must accomplish all welding and NDE in accordance with SFLC Standard Spec 0740, Welding and Allied Processes.

3.1.6 Disposal. Dispose of all removed piping and components not specified for reuse in accordance with all applicable Federal, state, and local regulations.

NOTE

Coast Guard personnel will operate all shipboard machinery and equipment.

3.2 Operational test, initial. Prior to commencement of work, the Contractor must witness Coast Guard personnel perform an initial operational test of all items or shipboard devices to be disturbed, used, repaired, or altered, to demonstrate existing operational condition. Submit a CFR.

NOTE

Some oily water must be available in the tank to test the Oily Water Separator

3.3 Tank cleaning. The Contractor must empty and clean the following tanks to prepare for hot work; the tank contents quantity is listed for bidding purposes:

- Oily Water Collecting Tank (5-41-1-F) – 500 gallons
- AFT Oily Water Tank (5-59-1-F) – 200 gallons

3.4 Rip-out. The Contractor must remove the existing baffle boxes and associated tubing in accordance with Coast Guard Drawing 418A-WMSL-551-004. See Figure 1 and Figure 2.

3.5 Installation. The Contractor must provide and install the OEM demisters, demister foundations, and associated piping and components in accordance with Coast Guard Drawing 418A-WMSL-551-004.

3.5.1 Pipe hangers. The Contractor must provide and install new pipe hangers or clamps in accordance with ASTM F708. Hanger spacing must not be greater than 6 feet.

3.5.2 Pipe flushing. The Contractor must flush all new and disturbed piping with clean freshwater until all debris is removed but no less than five minutes. Ensure flushing fluid is directed to move scale and foreign debris away from installed machinery to prevent possible damage upon operational testing.

3.5.2.2 Dispose of flushing fluid in accordance with all applicable Federal, state, and local regulations.

3.6 Hydrostatic testing. The Contractor, in the presence of the CG Inspector, must hydrostatically test all new and disturbed piping of each affected piping system, in accordance with SFLC Standard Specification 0740 Appendix C "Hydrostatic Test". Test pressure will be 68psig. No leakage or permanent deformation of pressure-containing parts is permissible. Repair all leaks and discrepancies found. Submit a CFR.

3.7 Insulation. The Contractor must install new insulation in the disturbed areas of work in accordance with Coast Guard Drawing 750-WMSL-635-001 and 750-WMSL-635-002

3.8 Preservation. The Contractor must preserve the following in accordance with SFLC Std Spec 6310 and CG Colors and Coatings Manual M10360.3D.

- New drain piping
- Demister foundations
- Pipe hangers
- Deck around new foundations – extend 6" past the foundation footprint

NOTE

Coast Guard personnel will operate all shipboard machinery and equipment.

3.9 Operational test, post repairs. After completion of work, the Contractor must witness Coast Guard personnel demonstrate operational test of all items or shipboard devices that have been disturbed, used, repaired, altered, or installed to be in satisfactory operating condition. Submit a CFR.

3.10 Touch-up preservation. The Contractor must prepare and coat all new and disturbed surfaces to match existing adjacent surfaces in accordance with SFLC Std Spec 6310, paragraph 3.1.13 (Touch-ups and minor coating repairs).

4. NOTES

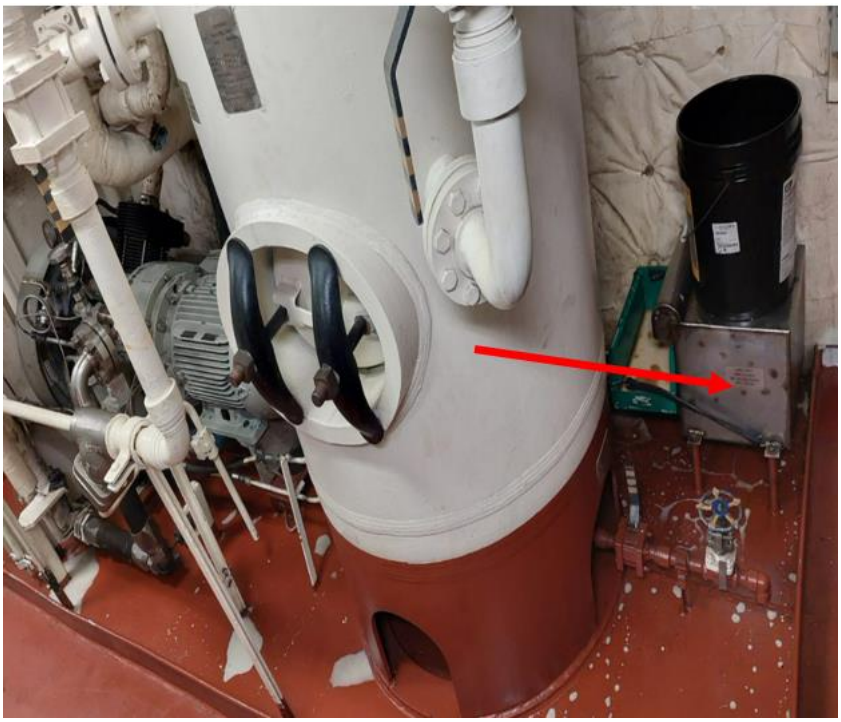

Figure 1 – Existing MPAC #1 showing the drain baffle box in AMR Upper Level (5-36-01-E)

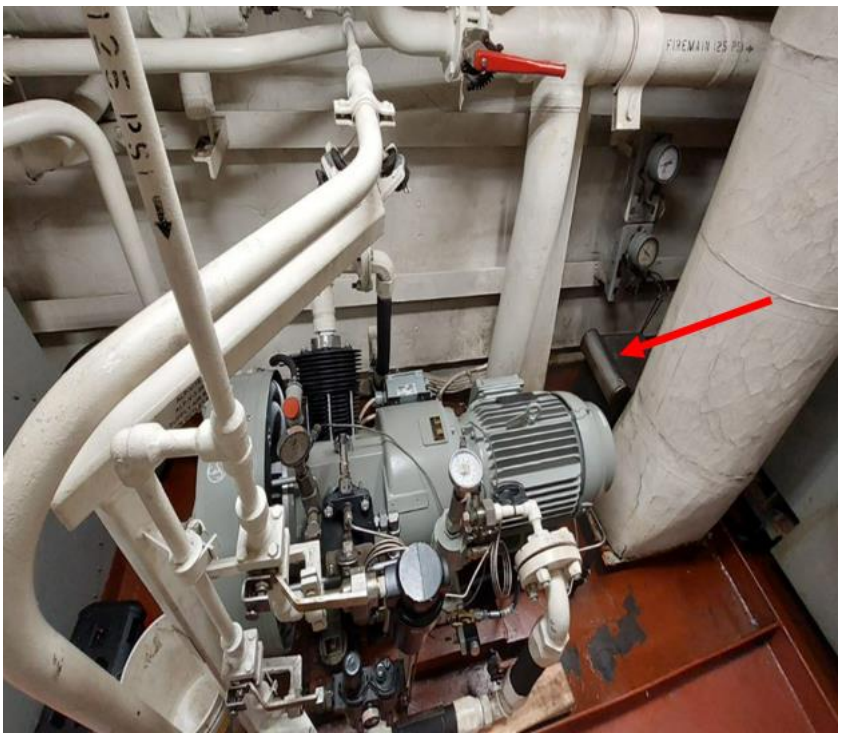

Figure 2 - Existing MPAC #2 showing the drain baffle box in AMMR Upper Level (5-52-01-E)

WORK ITEM 19: Weather Deck Scuppers, Install

1. SCOPE

1.1 Intent. This work item describes the requirements for the Contractor to install Weather Deck Scuppers by cutting Six (6) Openings and welding Two (2) Stiffeners on Bulwark, Starboard and Port (Three (3) per Each Side) as listed in Table 1.

NOTICE

Cutter cannot be flipped around due to on-going works.

TABLE 1 WEATHER DECK SCUPPER INSTALLATION

ITEM	DESCRIPTION	LOCATION	INSTALLATION	NOTE
WSD J-K, Stbd	Opening Cut, and Stiffening	Fr J-K, 01 Level Deck, Stbd	Opening 18 x 9, 1/2 aBD Flat Bar 6.5 x 3/8, 2.25 ft	CGD 750-WMSL-100-552, Sheet 4, Detail 4-1D
WSD J-K, Port	Opening Cut, and Stiffening	Fr J-K, 01 Level Deck, Port	Opening 18 x 9, 1/2 aBD Flat Bar 6.5 x 3/8, 2.25 ft	CGD 750-WMSL-100-552, Sheet 4, Detail 4-1D
WSD A-1, Stbd	Opening Cut	Fr A-1, 01 Level Deck, Stbd	Opening 48 x 9, 1/2 aBD	CGD 750-WMSL-100-552, Sheet 4, Detail 4-3E
WSD A-1, Port	Opening Cut	Fr A-1, 01 Level Deck, Port	Opening 48 x 9, 1/2 aBD	CGD 750-WMSL-100-552, Sheet 4, Detail 4-3E
WSD 9A-10, Stbd	Opening Cut	Fr 9A-10, 01 Level Deck, Stbd	Opening 48 x 9, 1/2 aBD	CGD 750-WMSL-100-553, Sheet 4, Detail 4-1C
WSD 9A-10, Port	Opening Cut	Fr 9A-10, 01 Level Deck, Port	Opening 48 x 9, 1/2 aBD	CGD 750-WMSL-100-553, Sheet 4, Detail 4-1C

Note: All information and quantities are approximate for bidding purposes only.

1.2 Government-furnished property.

None.

2. REFERENCES

COAST GUARD DRAWINGS

Coast Guard Drawing 750-WMSL-100-552, Rev -, Unit 1120 Structure-Main Deck to 01 Level-Bow to Fr 10

Coast Guard Drawing 750-WMSL-100-553, Rev -, Unit 1240 Structure-Main Deck to 01 Level-Fr 9 to Fr 22

Coast Guard Drawing 750-WMSL-602-001, Rev C, Fab & Instl of Ships Name & Draft Markings (ASC602001)

COAST GUARD PUBLICATIONS

Surface Forces Logistics Center Standard Specification 0000 (SFLC Std Spec 0000), 2022, General Requirements

Surface Forces Logistics Center Standard Specification 0740 (SFLC Std Spec 0740), 2022, Welding and Allied Processes

Surface Forces Logistics Center Standard Specification 6310 (SFLC Std Spec 6310), 2022, Requirements for Preservation of Ship Structures

OTHER REFERENCES

American Society for Nondestructive Testing (ASNT), Recommended Practice No. SNT-TC-1A, 2024, Personnel Qualification and Certification in Nondestructive Testing

American Society for Nondestructive Testing (ASNT), Standard No. ANSI/ASNT CP-189-2024, 2024, ASNT Standard for Qualification and Certification of Nondestructive Testing Personnel

American Welding Society (AWS) B1.10M/ B1.10, 2016, Guide for Nondestructive Examination of Welds

American Welding Society (AWS) B1.11M/B1.11, 2015, Guide for the Visual Examination of Welds

American Welding Society (AWS) D1.1/D1.1M, 2025, Structural Welding Code – Steel

Code of Federal Regulations (CFR) Title 29, Part 1910, 2017, Occupational Safety and Health Standards

Code of Federal Regulations (CFR) Title 29, Part 1915, 2013, Occupational Safety and Health Standards for Shipyard Employment

MIL-STD-1689A, 1990, Fabrication, Welding, and Inspection of Ships Structure

The Society for Protective Coatings (SSPC) Surface Preparation Specification No.3 (SSPC-SP 3), 2024, Power Tool Cleaning

The Society for Protective Coatings (SSPC) Surface Preparation Specification No.11 (SSPC-SP 11), 2020, Power Tool Cleaning to Bare Metal

3. REQUIREMENTS

3.1 General.

3.1.1 CIR. The Contractor must submit a CIR for the inspections listed in the following paragraph(s) :

None.

3.1.2 Tech Rep. The Contractor must provide the services of Tech Reps and personnels as follows :

- NDE Tech Rep : NDE Inspector/Level 2

3.1.2.1 NDE Tech Rep. The Contractor must provide the services of a qualified and certified NDE Inspector/Level 2 as follows:

- Perform NDE Inspections.

3.1.2.1.1 Qualifications/certifications. NDE Inspector/Level 2 certified and qualified in accordance with ASNT No. SNT-TC-1A (or ACCP). Submit the Tech Rep's qualifications/certifications to the COR at the Arrival Conference.

3.1.2.1.2 Dates of services. Include the dates of services in which Tech Reps must be on site as per their subcontract documentation.

3.1.3 Protective measures. The Contractor must furnish and install all protective measures in accordance with SFLC Std Spec 0000, paragraph 3.3.3 (Vessel component, space, and equipment protection).

3.1.3.1 Specific protections. Specific areas/equipment/ components to be protected include, but are not limited to:

- Adjacent bulwark and deck surfaces and deck fittings

3.1.3.2 Environment. Provide rigid protective covers (e.g. plates, or plywoods) on deck openings to prevent welding, sparks, and contaminants spreading out of working areas into environments.

3.1.3.3 Covering. Furnish and install suitable covering to seal off and protect all non-affected surfaces/equipment and spaces in the vicinity of the work area against welding, sparks, and contamination during the performance of work.

3.1.4 Interferences. The Contractor must handle all interferences in accordance with SFLC Std Spec 0000, paragraph 3.3.5 (Interferences).

3.1.5 Work locations. The concerned work areas are listed in Table 1. See the applicable drawings in section 2 for guidance, locations, and details.

3.1.6 Materials, tools, and services. The Contractor must provide materials, tools, and services to accomplish the requirements in this work item. New components, parts, materials, and paints with the same color, comparable and matching material properties as the existing components/parts. Use references in Sections 1, 2 and SFLC Std Specs for guidance, required materials, and details.

3.1.7 Paint float and man lift. The Contractor must provide service of paint float and man lift to facilitate work requirements, and comply with all required and applicable safety and protection specified in SFLC Std Spec 0000, Paragraph 3.3.1 (Personnel safety and property protection - general), and all OSHA safety and health regulations, and any other applicable federal, state, and local laws, and regulations, for the protection of both personnel and property.

3.1.8 Work plan. The Contractor must provide a work plan for the Weather Deck Scupper Installation to the COR at the Arrival Conference.

3.2 Weather deck scupper installation. The Contractor must install Weather Deck Scupper in accordance with SFLC Std Spec 0740, and Coast Guard Drawings 750-WMSL-100-552 and 750-WMSL-100-553. Submit a CFR.

3.2.1 Marking. In presence of the Coast Guard Inspector, the Contractor must mark Locations and Shapes for Opening Cuts and Stiffeners.

3.2.2 Stiffening. The Contractor must provide materials and weld stiffeners above Weather Deck Scuppers Fr. J-K on marking lines in accordance with SFLC Std Spec 0740.

- Pre-cut a Drain Hole, Radius 1 1/2" for positioning at Aft Corner for drainage,
- Ensure that welding does not warp or cause any distortion to adjacent structures, and
- Grind down smooth edges with adjacent surfaces upon completion of all welding.

3.2.3 Cutting. The Contractor must cut and remove Bulwark for Weather Deck Scupper as marked by applying and using Precise Cutting Methods and Tools as follows :

- Precisely cut perpendicular to plate surface along marking lines. (must not cut into intact substrates), and
- Grind down smooth edges with adjacent surfaces upon completion of all cutting.

3.3 Alignment and fairness tests. In presence of the Coast Guard Inspector, the Contractor must measure alignment and fairness of the newly welded structures (e.g. bulkheads/decks, frames, girders, and stiffeners) in accordance with SFLC Std Spec 0740, Paragraph 3.5 Fairness, and MIL-STD-1689A, Section 12.3 Alignment and Fairness. Submit a CFR.

- Ensure that all misalignments and deviations meet requirements and do not exceed tolerance limits as specified in MIL-STD-1689A, Section 12.3 Alignment and Fairness.
- Realign structures and fair plates until pass the test.

3.4 Touch-up preservation. The Contractor must prepare and coat all new and disturbed surfaces to match existing adjacent surfaces in accordance with SFLC Std Spec 6310, Paragraph 3.1.13 (Touch-ups and minor coating repairs).

3.5 CFR. The Contractor must summarize and submit a CFR to the COR if additional repair is necessary or required.

4. NOTES

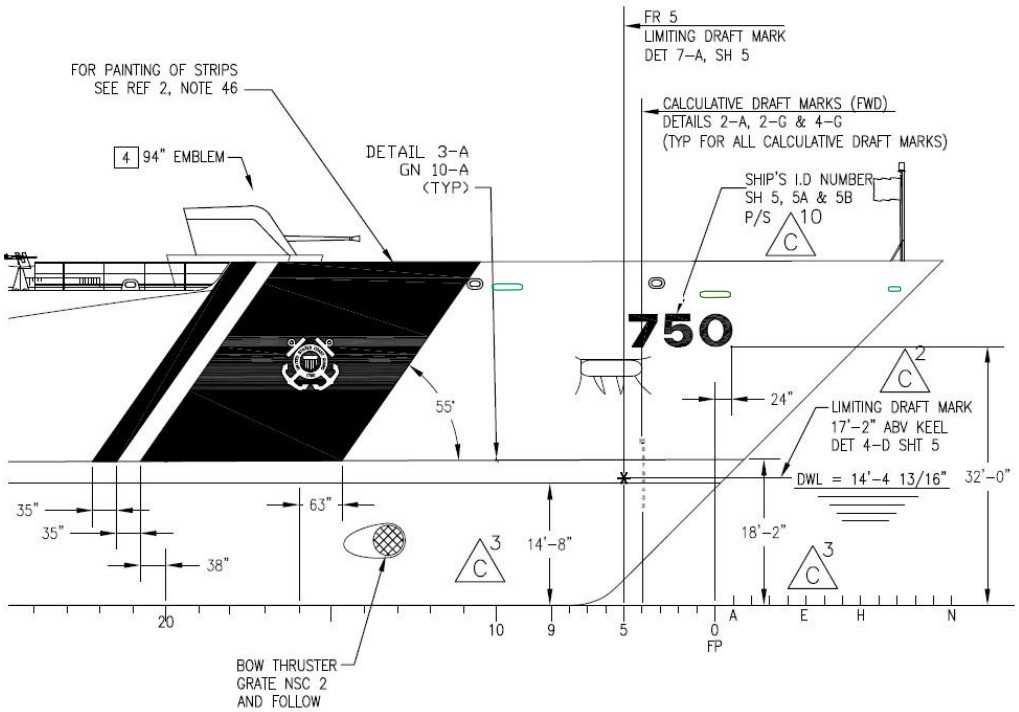

FIGURE 1 WEATHER DECK SCUPPER LOCATIONS
(STBD SHOWN, PORT SIMILAR)

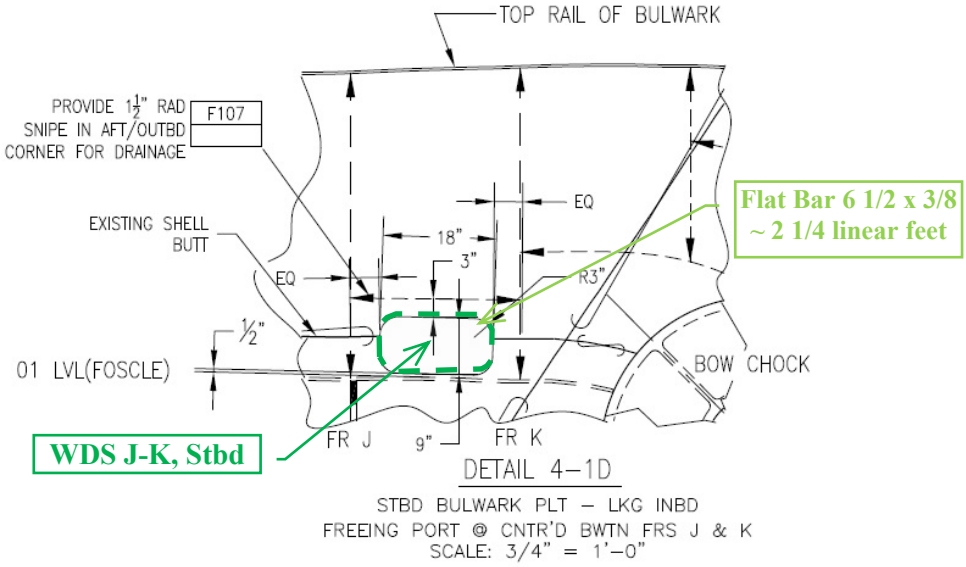

FIGURE 2 WEATHER DECK SCUPPER FR J-K, STBD
(CG DWG 750-WMSL-100-552, SHEET 4, DETAIL 4-1D)

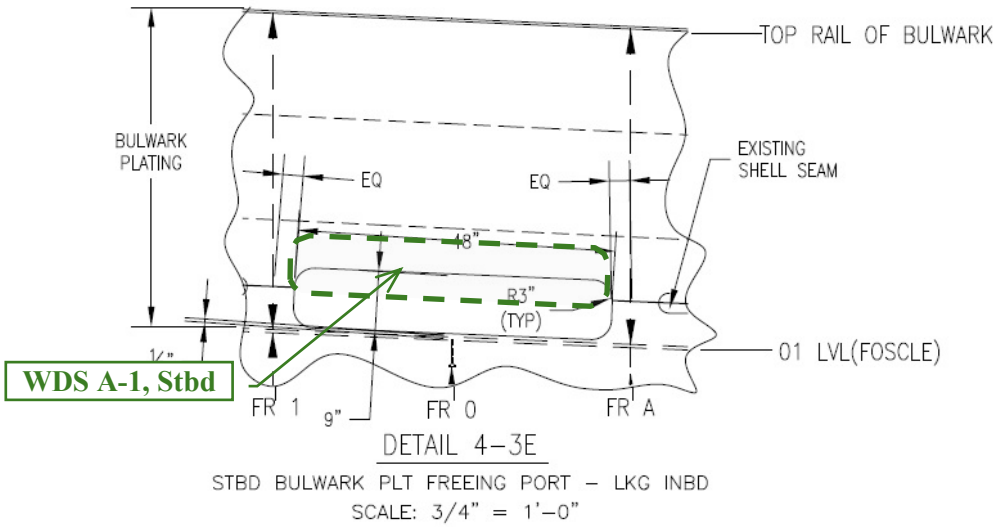

FIGURE 3 WEATHER DECK SCUPPER FR A-1, STBD
(CG DWG 750-WMSL-100-552, SHEET 4, DETAIL 4-3E)

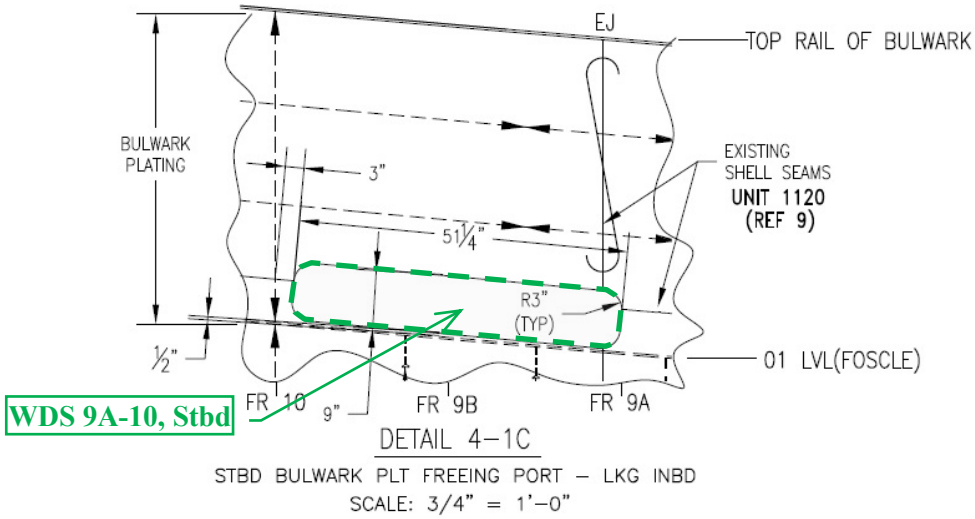

FIGURE 4 WEATHER DECK SCUPPER FR 9A-10, STBD
(CG DWG 750-WMSL-100-553, SHEET 4, DETAIL 4-1C)

WORK ITEM 20: Fuel Valves, Replace

1. SCOPE

1.1 Intent. This work item describes the requirements for the Contractor to install 8-inch Flowserve manually operated butterfly valves in place of the existing 8-inch Motor Operated Valves (MOVs) FT-V-022 and FT-V-029 as installed near Frame 47, 01 deck STBD and PORT aboard 418' WMSL class cutter..

1.2 Government-furnished property.

MTI	ITEM DESCRIPTION	NSN/PN	QTY	ESTIMATED COST ($/UNIT)
N	Flowserve Durco 8-BX2-L1111A1v1nz Performance Butterfly Valve with Gear Wheel Operator	NSN: 4820-01-F24-6975	2 ea.	5,302.00

2. REFERENCES

COAST GUARD DRAWINGS

Coast Guard Drawing 418A-WMSL-540-001, Rev C, Fuel Oil Diagram

Coast Guard Drawing 750-WMSL-540-054, Rev B, Fuel Transfer Unit 4310

Coast Guard Drawing 750-WMSL-202-501, Rev E, MCMS Remote Terminal Units Fire Zone No. 2 Deck Plan

Coast Guard Drawing 750-WMSL-320-022, Rev F, Power Operated Valve Deck Plan Wiring Diagram

COAST GUARD PUBLICATIONS

Surface Forces Logistics Center Standard Specification 0000 (SFLC Std Spec 0000), 2022, General Requirements

Surface Forces Logistics Center Standard Specification 0740 (SFLC Std Spec 0740), 2022, Welding and Allied Processes

Surface Forces Logistics Center Standard Specification 3042 (SFLC Std Spec 3042), 2022, Shipboard Electrical Cable Removal, Relocation, Splice, Repair, and Installation

Surface Forces Logistics Center Standard Specification 6310 (SFLC Std Spec 6310), 2022, Requirements for Preservation of Ship Structures

OTHER REFERENCES

Manufacturers Standardization Society of the Valve and Fittings Industry (MSS), SP-58, 2018, Pipe Hangers and Supports – Materials, Design, Manufacture, Selection, Application and Installation

3. REQUIREMENTS

3.1 General.

3.1.1 CIR.

None.

3.1.2 Tech Rep.

Note Applicable

3.1.3 Protective measures. The Contractor must furnish and install all protective measures in accordance with SFLC Std Spec 0000, paragraph 3.3.3 (Vessel component, space, and equipment protection).

3.1.4 Interferences. The Contractor must handle all interferences in accordance with SFLC Std Spec 0000, paragraph 3.3.5 (Interferences). Known interferences include, but are not limited to the following:

- Piping

3.1.5 Fluid handling. The Contractor must remove and dispose of removed fluids from the affected piping system, in accordance with all applicable Federal, state, and local regulations

3.1.6 Electrical Work. The Contractor must accomplish all electrical work in accordance with SFLC Std Spec 3042, and test cables in accordance with SFLC Std Spec 3041. Utilize the existing wire ways for new cable runs as much as possible.

3.1.7. Gas Free. The Contractor must conduct all cleaning and/or isolation necessary to complete hot work for this modification.

NOTE

Coast Guard personnel will operate all shipboard machinery and equipment.

3.2 Operational test, initial. Prior to commencement of work, the Contractor must witness Coast Guard personnel perform an initial operational test of all items or shipboard devices to be disturbed, used, repaired, or altered, to demonstrate existing operational condition. Submit a CFR.

3.3 8-inch MOV Removal. The Contractor must remove the existing 8-inch MOV (FT-V-022) and all associated components installed near Frame 47, 01 deck STBD side and remove the existing 8-inch MOV (FT-V-029) and all associated components installed near Frame 47, 01 deck PORT side as specified in the Coast Guard Drawing 750-WMSL-540-054, see Figure 1 and Figure 2. Retain hardware for reuse.

3.5 Electrical cable removal. The Contractor must remove the below actuator electrical cables as

specified in the Coast Guard Drawings 750-WMSL-202-501 and 750-WMSL-320-022.

3.5.1 CGMCS Cable Removal for each Valve.

3.5.1.1.. FT-V-022: Circuit K-RTU13-20 between Vent Fan SS-55 to FT-V-022 and Circuit KRTU13-21 between FT-V-022 to Vent Fan RS-2 in accordance with Coast Guard Drawing 750-WMSL-202-501.

3.5.1.2. FT-V-029: Circuit K-RTU14-2 between POV MD-V-054 to FT-V-029 and Circuit KRTU14-3 between FT-V-029 to Vent Fan RS-16 in accordance with Coast Guard Drawing 750-WMSL-202-501.

3.5.1.2 Power Cable and Component Removal.

3.5.1.3 Circuit: (3-25-2)-4P-H3 and Junction Box, (3-25-2)-4P-H4, (3-25-2)-4P-H5 and Disconnect switches in accordance with Coast Guard Drawing 750-WMSL-320-022.

3.5.2 Stuffing tube and cable bracket removal.

3.5.3 The Contractor must cap and seal existing deck stuffing tubes. Remove unused cable hanger in accordance with SFLC Std Spec 3042.

3.5.4 Dispose of all removed components not specified for reuse in accordance with all applicable Federal, state, and local regulations.

3.6 8-inch Manual Butterfly Valve Installation. The Contractor must install a new 8-inch manual butterfly valve near Frame 47, 01 deck STBD side and a new 8-inch manual butterfly valve near Frame 47, 01 deck PORT side in accordance with Coast Guard Drawing 418A-WMSL-540-001. The Contractor will provide and fabricate new gaskets and utilize retained hardware for installation.

3.6.1 Electrical Cable Installation. The Contractor must install the below new electrical cables in accordance with Coast Guard Drawing 750-WMSL-202-501.

3.6.1.1 FT-V-022: Circuit K-RTU13-20 between Vent Fan SS-55 to Vent Fan RS-2.

3.6.1.2 FT-V-029: Circuit K-RTU14-2 between POV MD-V-054 to VENT Fan RS-16.
3.6.2 Pipe hanger Installation. The Contractor must furnish, fit or re-install pipe hanger in accordance with MSS SP-58.

3.6.3 Clean and inspect all re-used components prior to re-installation.

3.8 Hydrostatic Test. After all authorized repairs, the Contractor must hydrostatically test all new piping in accordance with SFLC Std Spec 0740, Appendix C, Hydrostatic Test. Ensure zero leakage from or permanent deformation of pressure-containing parts by repairing all leaks, deformations, and discrepancies. Submit a CFR.

3.9 Leak test. After completing all authorized mechanical (i.e. threaded, bolted, etc.) joint repairs, the Contractor must test the piping's operation using the system fluid at normal operating pressure. Ensure zero visible leakage from or deformation of mechanical parts by repairing all leaks and discrepancies. Submit a CFR

NOTE

Coast Guard personnel will operate all shipboard machinery and equipment.

3.7 Operational test, post repairs. After completion of work, the Contractor must thoroughly test, in the presence of the Coast Guard Inspector and demonstrate all items or shipboard devices that have been disturbed, used, repaired, altered, or installed to be in satisfactory operating condition. Submit a CFR.

3.10 Touch-up preservation, general. The Contractor must prepare and coat all new and disturbed exterior and interior surfaces, as applicable, to match existing adjacent surfaces in accordance with SFLC Std Spec 6310, paragraph 3.1.13 (Touch-ups and minor coating repairs)

4. NOTES

This section is not applicable to this work item.

WORK ITEM 21: Dry Provision Storeroom, Modify

1. SCOPE

1.1 Intent. This work item describes the requirements for the Contractor to modify Dry Provisions Storeroom 1-67-2-A and adjacent compartments as listed in Table 1. This work includes the addition of storage shelving, a can rack, and expansion of the bulk stowage grid and associated restraints. These modifications will also include hot works on decks and bulkhead scantlings, which will require gas free certification of affected spaces and may affect deck covering and preservation.

A-Team/APM: Modify and fill information in table as required.

- ESD just redesigned Dry Provision Storeroom and issued Newer CG Dwg Rev D (CG Dwg 418A-WMSL-672-002, Rev D, Dry Provisions Storeroom Modifications).

- CG Dwgs : Added and/or provided as referred to. (e.g. CG Dwg 750-WMSL-621-009)

- A-Team add GFP : Switch, Thermostatic. What is it for ? >> 3.4.5.1 Heater thermostats.

- NDE Tch Rep : Generally, NDE Tech Rep and NDE are required for Primary Hull Structures (e.g. Hull, Strength Decks, WT Boundaries), and Weight Handling Components (e.g. Bitts, Checks, Padeyes). >> As A-Teams' requests, temporarily incorporated 3.1.2.1 NDE Tech Rep and 3.N NDE.

- CG Drawings : Please recheck CG Drawings for this discrepancies.
- Coast Guard Drawing 418A-WMSL-320-005, Rev -, Sea Commander Power System Mods (WMSL-750) >> Not Applicable.
- Coast Guard Drawing 750-WMSL-320-004, Rev D, Power Sys Dk Plan - 1st Platf & Below, Fwd of Fr 36 & Aft of Fr 70 Cable Routing (ASC320003) >> Required and listed.

- 3.1.N Work coordination : Require "Temporary Service, Provide (incl. Temporary Storage)." Otherwise, incorporate in General Specification WI to include 3.N Temporary storage. Provide temporary storage if Work Item, "Temporary Service, Provide" is not included in this Spec Package.

- 3.N Deck covering : Not affected. Repair and reseal are not necessary. >> Delete ?

- 3.N Insulation. : ESD has implemented and updated Insulations in NSCs. And, MIL-DTL-32585A superseded MIL-I-742F and Other Military Standards for Insulations. So, there have been Some Changes on Many Requirements, Types, and Properties of Insulations.
- Older/Existing Insulations and Repairs : Follow CG Dwg 750-WMSL-635-

002, Rev K, and Old Military Standards. (Allowable until depleted)
- Newer/Updated Insulations and Renewals : Follow CG Dwg 750-WMSL-635-502, Rev -, and MIL-DTL-32585A. (Required and recommended)

TABLE 1 WORK REQUIREMENTS

COMPARTMENTS	ITEMS	REQUIREMENTS
Passage 1-64-0-L	Sewage Piping (VCHT 111-031) Joiner Bhd, Door, and Coaming	- Relocate Sewage Piping (VCHT 111-031) via Passage 1-64-0-L/outside of Dry Provisions Storeroom 1-67-2-A (from Fan Room 1-70-2-Q to Deck Toilet 1-66-2-L) - Install Joiner Bulkhead, Door, and Coaming.
General Stores 1-66-4-A	Vent Plenum HVAC	- Remove Vent Plenum. - Relocate HVAC.
Dry Provisions Storeroom 1-67-2-A	HVAC Shelves, Can Rack, Stowage Grid	- Relocate HVAC - Install Shelving, Can Rack, Stowage Grid.
Dry Provisions Storeroom Annex 1-71-2-A	New Space / Compartment and Number	- New Space created within Passage 1-64-0-L.

Table 1: All information is for bidding purposes only.

1.2 Government-furnished property.

TABLE 2 GOVERNMENT FURNISHED PROPERTY

MTI	ITEM DESCRIPTION	NSN/PN	QTY	PRICE ($/UNIT)
N	Switch, Thermostatic	NSN: 5930-01-342-3911 (PN: 444-10)	2 ea.	100.00

Note : *New or refurbished equipment that the Government may provide for installation in place of existing equipment.

2. REFERENCES

COAST GUARD DRAWINGS

Coast Guard Drawing 418A-WMSL-100-001, Rev B, General Arrangements

Coast Guard Drawing 418A-WMSL-180-003, Rev C, SS-1-69-2 Fan Fdn Modifications

Coast Guard Drawing 418A-WMSL-512-003, Rev C, HVAC Modifications for Dry Provisions Stowage Mods

Coast Guard Drawing 418A-WMSL-593-006, Rev -, Reroute Sewage Piping iwo Dry Provisions Rm

Coast Guard Drawing 418A-WMSL-672-002, Rev D, Dry Provisions Storeroom Modifications

Coast Guard Drawing 750-WMSL-320-004, Rev D, Power Sys Dk Plan - 1st Platf & Below, Fwd of Fr 36 & Aft of Fr 70 Cable Routing (ASC320003)

Coast Guard Drawing 750-WMSL-512-059, Rev D, HVAC Equipment List (ASC512004)

Coast Guard Drawing 750-WMSL-512-534, Rev D, HVAC Equipment List

Coast Guard Drawing 750-WMSL-600-030, Rev K, Fab & Instl of Hull Outfit Design, Unit 3140 (ASC600314)

Coast Guard Drawing 750-WMSL-621-009, Rev D, Joiner Bulkhead Arr Mn Dk Fr 64 Aft (ASC621009)

Coast Guard Drawing 750-WMSL-635-002, Rev K, Insulation Arr & Details Thermal, Acoustic, & Fire (ASC635002)

Coast Guard Drawing 750-WMSL-635-502, Rev -, Insulation Arr & Details Thermal, Acoustic, & Fire (WMSL 754 & Follow)

Coast Guard Drawing 750-WMSL-640-502, Rev -, Furniture Schedule (WMSL 754 & Follow)

NAVSEA Drawing 803-5184182, Rev B, Insulation, Passive Fire Protection- Installation Details

NAVSEA Drawing 804-5773931, Rev A, Acoustic & Thermal Insulation for Compartments Installation Details

COAST GUARD PUBLICATIONS

Surface Forces Logistics Center Standard Specification 0000 (SFLC Std Spec 0000), 2022, General Requirements

Surface Forces Logistics Center Standard Specification 0740 (SFLC Std Spec 0740), 2022, Welding and Allied Processes

Surface Forces Logistics Center Standard Specification 0850 (SFLC Std Spec 0850), 2022, General Requirements for Drawing Preparation

Surface Forces Logistics Center Standard Specification 3041 (SFLC Std Spec 3041), 2022, Shipboard Electrical Cable Test

Surface Forces Logistics Center Standard Specification 3042 (SFLC Std Spec 3042), 2022, Shipboard Electrical Cable Removal, Relocation, Splice, Repair, and Installation

Surface Forces Logistics Center Standard Specification 6310 (SFLC Std Spec 6310), 2022, Requirements for Preservation of Ship Structures

Surface Forces Logistics Center Standard Specification 6341 (SFLC Std Spec 6341), 2022, Install Interior Deck Covering Systems

OTHER REFERENCES

American Society for Nondestructive Testing (ASNT), Recommended Practice No. SNT-TC-1A, 2024, Personnel Qualification and Certification in Nondestructive Testing

American Society for Nondestructive Testing (ASNT), Standard No. ANSI/ASNT CP-189-2024, 2024, ASNT Standard for Qualification and Certification of Nondestructive Testing Personnel

American Welding Society (AWS) B1.10M/ B1.10, 2016, Guide for Nondestructive Examination of Welds

American Welding Society (AWS) B1.11M/B1.11, 2015, Guide for the Visual Examination of Welds

American Welding Society (AWS) D1.1/D1.1M, 2025, Structural Welding Code – Steel

MIL-DTL-32585A w/ Amendment 1, 2023, Insulation, Thermal and Acoustic, Fibrous Glass

MIL-STD-1689A, 1990, Fabrication, Welding, and Inspection of Ships Structure

The Society for Protective Coatings (SSPC) Surface Preparation Specification No.3 (SSPC-SP 3), 2024, Power Tool Cleaning

The Society for Protective Coatings (SSPC) Surface Preparation Specification No.11 (SSPC-SP 11), 2020, Power Tool Cleaning to Bare Metal

3. REQUIREMENTS

3.1 General.

3.1.1 CIR. The Contractor must submit a CIR for the inspections listed in the following paragraph(s) :

None.

3.1.2 Tech Rep. The Contractor must provide the services of Tech Reps and personnel as follows :

- Marine Chemist
- NDE Tech Rep : NDE Inspector/Level 2

3.1.2.1 Marine Chemist. The Contractor must provide the services of Marine Chemist/Gas Free in accordance with Work Item General Requirements and SFLC Std Spec 0000.

3.1.2.2 NDE Tech Rep. The Contractor must provide the services of a qualified and certified NDE Inspector/Level 2 as follows:

- Perform NDE Operations and Inspections.

3.1.2.2.1 Qualifications/certifications. NDE Inspector/Level 2 certified and qualified in accordance with ASNT No. SNT-TC-1A (or ACCP). Submit the Tech Rep's qualifications/certifications to the COR at the Arrival Conference.

3.1.2.2.2 Dates of services. Include the dates of services in which Tech Reps must be on site as per their subcontract documentation.

3.1.3 Protective measures. The Contractor must furnish and install all protective measures in accordance with SFLC Std Spec 0000, paragraph 3.3.3 (Vessel component, space, and equipment protection).

3.1.3.1 Specific protections. Specific areas/equipment/ components to be protected include, but are not limited to:

- Machinery spaces
- Machinery, equipment, and components

3.1.4 Interferences. The Contractor must handle all interferences as listed below in accordance with SFLC Std Spec 0000, Paragraph 3.3.5 (Interferences). Known interferences include, but are not limited to the below listed :

- Machinery, equipment, and components (e.g. removable components/parts)
- Ventilation systems, and components (e.g. removable components/parts)
- Storages (e.g. shelves, racks)
- Water mist tank # 2
- Sheathing

- Insulation
- Deck covering
- Drains, covers, and plugs
- Closures
- Outfits, foundations, and fittings
- Controls and terminals
- Lights, alarms, cameras, speakers, sensors, switches, and supports
- Piping, hoses, and supports
- Cables, wires, and supports

3.1.4.1 Water mist tank # 2. Water will be transferred, stripped out, and pressed down by ship's force to at least 12 inches away from welding areas.

3.1.5 Work locations. The concerned work areas are listed in Table 1. See the applicable drawings in Section 2 for guidance, locations, and details.

3.1.6 Materials, tools, and services. The Contractor must provide materials, tools, and services to accomplish the requirements in this work item. New components, parts, materials, and paints with the same color, comparable and matching material properties as the existing components/parts. Use references in Sections 1, 2 and SFLC Std Specs for guidance, required materials, and details.

- Provide and apply wing nuts instead of nuts for easier shelf disassembly and re-assembly.

3.1.7 Contamination prevention. The Contractor must take all precautions to prevent contamination of personnel and spaces in accordance with all applicable Federal, state, and local regulations.

3.1.8 Work plan. The Contractor must provide a work plan for the modifications of Dry Provisions Storeroom and adjacent compartments including items listed in Table 1 and related Coast Guard Drawings provided in Section 2 to the COR at the Arrival Conference.

~~3.1.10 Work coordination. The Contractor must coordinate the accomplishment of this work item with the following work items :~~

- ~~Temporary Services, Provide (incl. Temporary Storage)~~

3.1.11 Notification. The Contractor must notify the COR 48 hours prior to starting work on this item.

3.2 Shipcheck. In coordination with the Coast Guard Inspector, the Contractor must shipcheck for the modifications of Dry Provisions Storeroom and adjacent compartments including items listed in Table 1 and related Coast Guard Drawings provided in Section 2. Submit a CFR.

3.3 Operational test, initial. Prior to commencement of work, the Contractor must witness Coast Guard personnel perform an initial operational test of all items or shipboard devices to be disturbed, used, repaired, or altered, to demonstrate existing operational condition. Submit a CFR.

NOTE
Coast Guard personnel will operate all shipboard machinery and equipment.

3.4 Removals. The Contractor must remove the following items. Refer to Drawings and References in Section 2 as guidance.

3.4.1 Stowage. The Contractor must remove portion of existing stowage grid in way of new can rack installation. Remove stowage shelf over transformer. Refer to Coast Guard Drawing 418A-WMSL-672-002 for locations and details.

3.4.2 HVAC system. The Contractor must remove Supply Fan, SS-1-69-2 and ductwork from Dry Provisions Storeroom. Retain the fan and portions of the duct for reinstallation. Refer to Coast Guard Drawing 418A-WMSL-512-003 for locations and details.

3.4.3 Sewage piping. The Contracor must remove the sewage piping that runs through dry provisions storeroom for rerouting outside of the stores space. Refer to Coast Guard Drawing 418A-WMSL-593-006 for locations and details.

3.4.4 Bulkhead. The Contractor must remove intake plenum bulkhead between Frame 69 and Frame 70, remove portion of bulkhead 70 for new duct spool penetration, and remove the fan foundation from Dry Provisions Storeroom. Refer to Coast Guard Drawing 418A-WMSL-180-003 for locations and details.

3.5 Installations. The Contractor must install the following systems, outfits, fittings, bulkheads, and associated systems and components. Use the Drawings and References in Section 2 as guidance.

3.5.1 Bulk stowage grid. Within the Dry Provisions Storeroom, the Contractor must install bulk stowage grid on the deck and in the overhead. This installation includes removable vertical battens located at the edge of the grid and adjustable/moveable battens, known as “Pogo Sticks”, located within the grid. This installation expands the deck area covered by the existing stowage grid. Refer to Coast Guard Drawing 418A-WMSL-672-002 for location and details.

3.5.2 Foundations and supports. The Contractor must install a fan foundation, associated supporting structure, and patch previous penetration through Bulkhead 70. Refer to Coast Guard Drawing 418A-WMSL-180-003 for locations and details.

3.5.3 Bulkhead, door, and coaming. The Contractor must install joiner bulkhead, joiner door, and associated coamings, curtain plate, and fittings in Passage 1-64-0-L to create new storage area in this space, named as “Dry Provisions Storeroom Annex 1-72-2-A”. Refer to Coast Guard Drawing 418A-WMSL-672-002 for locations and details.

3.5.4 Sewage piping. The Contractor must install and reroute new Sewage Piping VCHT 111-031 via Passage 1-64-0-L (from Fan Room 1-70-2-Q to Deck Toilet 1-66-2-L). Refer to Coast Guard Drawing 418A-WMSL-593-006 for locations and details.

3.5.5 HVAC. The contractor must install the previously removed Supply Fan SS-1-69-2 and associated duct work. Refer to Coast Guard Drawing 418A-WMSL-512-003 for locations and details.

3.5.5.1 Heater thermostats. Install and connect heater thermostats in accordance with Coast Guard Drawings 418A-WMSL-512-003 and 750-WMSL-512-059/-534.

- Thermostat for Preheater PHR 1-67-2. Refer to Coast Guard Drawing 418A-WMSL-512-003, Elevation 21-A and Section 21-E, and Coast Guard Drawing 750-WMSL-512-059/-534, Arrangement A Electric Preheater Control. It is located after Heater Downstream Flow.
- Thermostat for Reheater RHR 1-70-2. Refer to Coast Guard Drawing 418A-WMSL-512-003,

Plan View 27-D, and Coast Guard Drawing 750-WMSL-512-059/-534, Arrangement E Electric Reheater Control. Proper location is recommended to be around Switch and Plug area near Joiner Door inside Dry Provisions Storeroom Annex 1-72-2-A.

3.5.6 Electrical modification. Relocate fan in accordance with Coast Guard Drawing 750-WMSL-320-004.

3.5.7 Equipment guard. The Contractor must install a removable equipment guard made of expanded metal around the existing electrical transformer. Refer to Coast Guard Drawing 418A-WMSL-672-002 for locations and details.

3.5.8 Shelves. The Contractor must fabricate assemble and removable shelves, and install them along the cutter shell in the Dry Provisions Storeroom and along the aft bulkhead of the new Dry Provisions Storeroom Annex. Refer to Coast Guard Drawing 418A-WMSL-672-002 for location and details.

3.5.9 Can rack. The Contractor must fabricate assemble and removable can rack in the Dry Provisions Storeroom. Refer to Coast Guard Drawing 418A-WMSL-672-002 for location and details.

3.6 Welding requirements. The Contractor must perform all welding and allied processes, and nondestructive examination (NDE), in accordance with SFLC Std Spec 0740.

3.7 NDE. In presence of the Coast Guard Inspector, the Contractor must perform NDE in accordance with SFLC Std Spec 0740, Appendix C. Submit a CFR.

3.8 Boundary test (on watertight boundaries). In presence of the Coast Guard Inspector, the Contractor must verify the integrity of all boundaries affected by this work item using one of the methods described in SFLC Std Spec 0740, Appendix C. Submit a CFR.

3.9 Electrical works. The Contractor must accomplish all electrical work in accordance with SFLC Std Spec 3042, and test cables in accordance with SFLC Std Spec 3041. Utilize the existing wire ways for new cable runs as much as possible.

3.10 Deck covering. The Contractor must repair damaged or disturbed deck covering in accordance with SFLC Std Spec 6341.

- Seal all deck covering.

3.11 Insulation. The Contractor must renew all removed or damaged insulation in accordance with Coast Guard Drawings 750-WMSL-635-002 and 750-WMSL-635-503, NAVSEA Drawings 803-5184182 and 804-5773931, and MIL-DTL-32585A, if existing.

- Older/Existing Insulations and Repairs : Follow CG Dwg 750-WMSL-635-002, Rev K, and Old Military Standards. (Allowable until depleted)
- Newer/Updated Insulations and Renewals : Follow CG Dwg 750-WMSL-635-502, Rev -, and MIL-DTL-32585A. (Required and recommended)

3.12 Sheathing. The Contractor must renew the removed and damaged sheathing on insulation, if existing.

- Flash the expanded metal edges created by cutting, if existing.

3.13 Operational test, post repairs. After completion of work, the Contractor must thoroughly test, in the presence of the Coast Guard Inspector and demonstrate all items or shipboard devices that have been disturbed, used, repaired, altered, or installed to be in satisfactory operating condition. Submit a CFR.

NOTE

Coast Guard personnel will operate all shipboard machinery and equipment.

3.14 Touch-up preservation. The Contractor must prepare and coat all new and disturbed surfaces to match existing adjacent surfaces in accordance with SFLC Std Spec 6310, paragraph 3.1.13 (Touch-ups and minor coating repairs).

- Paint on all new bulkheads, doors and panels, foundations, brackets, and connecting points including disturbed areas.
- Need not paint aluminum structures and components (i.e. shelf structures, components, fittings, or any other components made from aluminum).

3.15 Redlined drawing deliverable(s). The Contractor must “red-line” Coast Guard Drawing 418A-WMSL-512-003, 418A-WMSL-593-006, 418A-WMSL-672-002, and any other Coast Guard Drawings affected by discrepancies, relocations or modifications to reflect the work or deviations specified in this work item in accordance SFLC Std Spec 0850. Submit a CFR.

3.15.1 Preliminary/draft submission. No later than 24 hours after completion of this work item, submit a draft copy of the "red-lined" drawing(s) to the COR for review and approval.

3.15.2 Final submission. No later than 10 calendar days after receiving Coast Guard comments or completion of the availability, whichever occurs first, incorporate all comments and deliver one set of the final red-lined drawing(s) to the COR.

3.16 CFR. The Contractor must summarize and submit a CFR to the COR if additional repair is necessary or required.

4. NOTES

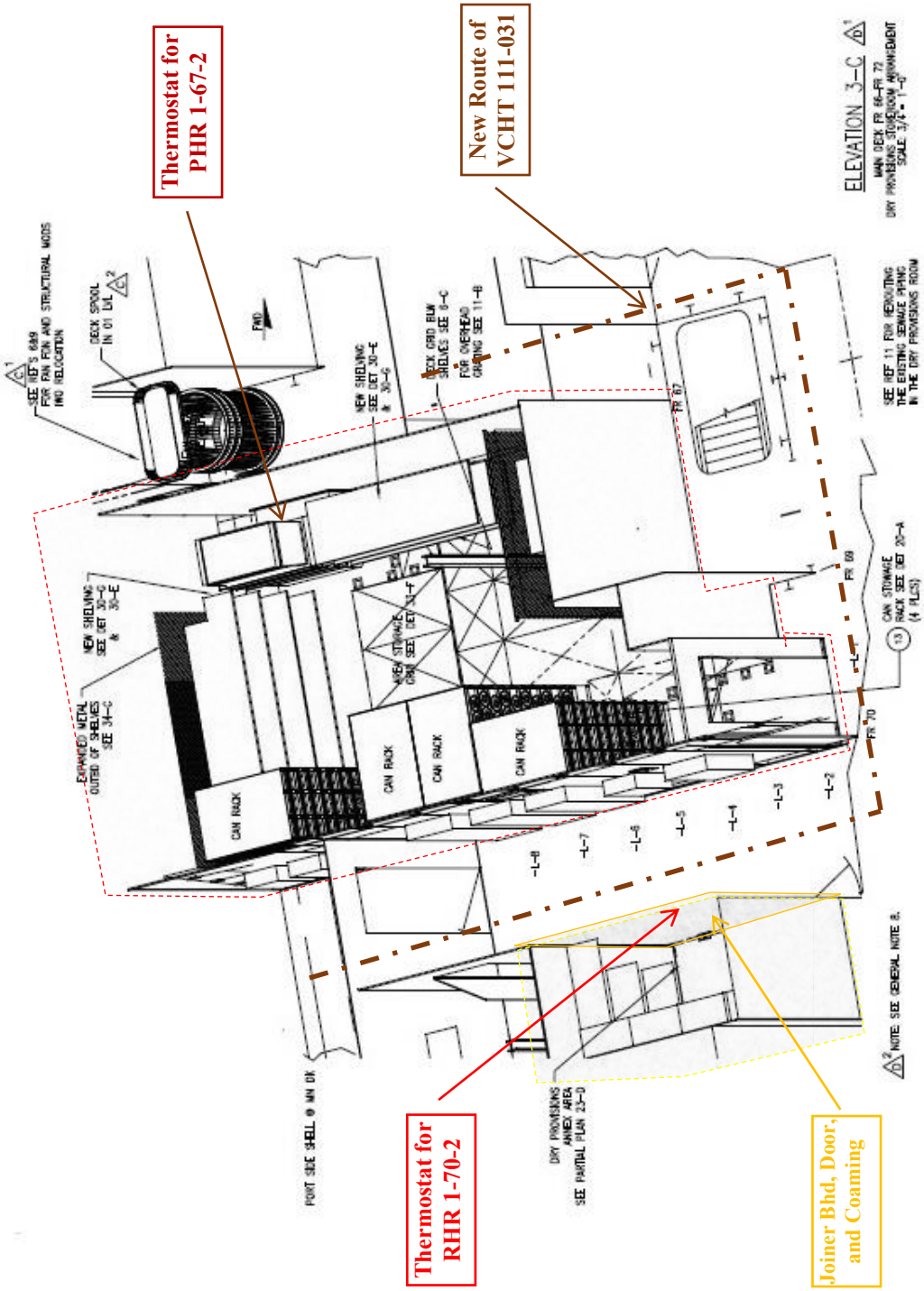
Thermostat for PHR 1-67-2
New Route of VCHT 111-031
Thermostat for RHR 1-70-2
Joiner Bhd, Door, and Coaming
ELEVATION 3-C
CAN RACK
CAN RACK
CAN RACK
FWD
FR 67
FR 69
FR 70
PORT SIDE SHELL @ MAN DK

FIGURE 1 DRY PROVISIONS STOREROOM MODIFICATION
(CG DWG 418A-WMSL-672-002, REV D, DRY PROVISIONS STOREROOM MODIFICATIONS)

WORK ITEM 22: Cargo Handling Elevator, Annual Inspection and Test, Perform

1. SCOPE

1.1 Intent. This work item describes the requirements for the Contractor to inspect and perform annual preventive maintenance on the cargo handling elevator.

1.2 Government-furnished property.

None.

2. REFERENCES

COAST GUARD DRAWINGS

Coast Guard Drawing 750-WMSL-572-002, Rev D, Elevator Arr & Instl (ASC572002)

COAST GUARD PUBLICATIONS

Coast Guard Technical Publication (TP) 7108A, SWBS 573, Jan 2022, Stores Elevator - Model 20833

Surface Forces Logistics Center Standard Specification 0000 (SFLC Std Spec 0000), 2022, General Requirements

Surface Forces Logistics Center Standard Specification 3042 (SFLC Std Spec 3042), 2022, Shipboard Electrical Cable Removal, Relocation, Splice, Repair, And Installation

Surface Forces Logistics Center Standard Specification 3100 (SFLC Std Spec 3100), 2022, Inspect, Test and Recondition AC Synchronous Machines In-Place

Surface Forces Logistics Center Standard Specification 5000 (SFLC Std Spec 5000), 2022, Auxiliary Machine Systems

Surface Forces Logistics Center Standard Specification 6310 (SFLC Std Spec 6310), 2022, Requirements for Preservation of Ship Structures

OTHER REFERENCES

American Society of Mechanical Engineers (ASME) A17.2, Guide for the Inspection of Elevators, Escalators and Moving Walks.

3. REQUIREMENTS

3.1 General.

3.1.1 CIR.

None.

3.1.2 Tech Rep. The Contractor must provide the services of a qualified Tech Rep, who is familiar with the Jered Industries Cargo Elevator (i.e. Model 20833) to accomplish the following, on site:

- Advise on manufacturer's proprietary information pertinent to the system.
- Assist with repair and renewing the Cargo Elevator parts.
- Ensure compliance with manufacturer's procedures and standards during disassembly, inspection, and reassembly of the system.

3.1.2.1 Ensure the Tech Rep has experience with the system/equipment stated above and demonstrated on their résumé.

3.1.2.2 Submit the name and résumé of the Tech Rep to the COR at the Arrival Conference.

3.1.3 Protective measures. The Contractor must furnish and install all protective measures in accordance with SFLC Std Spec 0000, paragraph 3.3.3 (Vessel component, space, and equipment protection).

3.1.4 Interferences. The Contractor must handle all interferences in accordance with SFLC Std Spec 0000, paragraph 3.3.5 (Interferences). Known interferences include, but are not limited to the following:

- Electrical wiring

CAUTION

See Coast Guard Technical Publication 7108A Safety summary for specific warnings and caution notes to ensure safety of personnel and equipment.

WARNING

The work and inspections specified require that the elevator doors be opened and that the inspector examine items located within the trunk. Failure to observe/implement safety precautions could result in personnel injury/death.

NOTE

Coast Guard personnel will operate all shipboard machinery and equipment.

3.2 Operational test, initial. Prior to commencement of work, the Contractor must witness Coast Guard personnel perform an initial operational test of the Jered Industries (i.e. Model 20833) cargo handling elevator to demonstrate existing operational condition. Submit a CFR.

3.3 Cargo handling elevator inspection. The Contractor must inspect the elevator mechanical and electrical components for proper condition. See Coast Guard Drawing 750-WMSL-572-002 and Coast Guard TP 7108A for elevator details, and follow the guidance in the applicable sections of ASME A17.2, Guide for the Inspection of Elevators, Escalators and Moving Walks. If components are damaged or exhibit abnormal wear, document condition and submit a CFR.

- Hoist machinery assemblies
- Doors and interlocks
- Platform assembly, rails, guides, and rollers
- Sheave Assembly

- Limit switches
- Level and Master control stations
- Overspeed governor and wire rope assembly
- Slack Rope assemblies
- Brake
- 90-Degree gear Reducer

3.4 Elevator wire rope inspection. The Contractor must inspect and measure the elevator wire ropes, in accordance with Coast Guard TP 7108A, paragraph 4.4.1. Ensure there is equal tension between each of the elevator wire ropes. Submit a CFR.

3.5 Overspeed governor wire rope inspection. The Contractor must inspect and measure the overspeed governor wire rope, in accordance with Coast Guard TP 7108A, paragraph 4.4.1. Adjust the tension arm as close to horizontal as possible in accordance with Coast Guard TP 7108A, Appendix C and ensure there is equal tension throughout the rope. Submit a CFR.

3.6 Gear box oil and component lubrication. The Contractor must perform the Semi-Annual Maintenance Requirements for the tension sheaves, hoist wire ropes, motor couplings, guide rails, slack rope assembly, and door fittings in accordance with Coast Guard TP 7108A, paragraph 4.2.2.

3.7 Electric motor inspection. The Contractor must take insulation resistance readings on the motor in accordance with SFLC Std Spec 3100. Disconnect and reinstall cables in accordance with SFLC Std Spec 3042. Readings must be taken with power removed from the motors. Readings must be above 2 Megaohms for continued operation. Submit a CFR.

3.8 Brake inspection. The Contractor must inspect the friction brake discs and verify proper settings of the electric brake in accordance with Appendix B of Coast Guard Tech Pub 7108A. Submit a CFR with inspection results and any recommendations for required repairs.

3.9 Hoist controller inspection. The Contractor must open the motor controller and inspect for loose wires, loose components, charred or burned components, dirt or other abnormal conditions. Submit a CFR if abnormal conditions requiring repair are observed, otherwise return motor controller to original condition.

NOTE

Coast Guard personnel will operate all shipboard machinery and equipment.

3.10 Operational test, post repairs. After completion of work, the Contractor must thoroughly test, in the presence of the Coast Guard Inspector and demonstrate all items or shipboard devices that have been disturbed, used, repaired, altered, or installed to be in satisfactory operating condition. Thoroughly test and prove all functions and safety features of the cargo handling elevator to be in a satisfactory operating condition. Submit a CFR.

3.10.1 No-load test. The Contractor must witness Coast Guard personnel operate the elevator in normal mode, and verify safety devices, emergency stop, and interlocks are properly installed and operational. As the car travels, observe the equipment to detect any unusual noise or vibration. The motor should start immediately when the power is applied, and the drum should stop within 0.5 seconds after power is removed. Carefully observe the hoist motor, bearing, and brake for any signs of overheating.

3.11 Touch-up preservation. The Contractor must prepare and coat all new and disturbed surfaces to match existing adjacent surfaces in accordance with SFLC Std Spec 6310, paragraph 3.1.13 (Touch-ups and minor coating repairs).

4. NOTES

This section is not applicable to this work item.

WORK ITEM 23: Wave Guide Dryer Flexible Hoses, Renew

1. SCOPE

1.1 Intent. This work item describes the requirements for the Contractor to renew the designated hose assemblies and expansion joints for the Wave Guide Dryer.

1.2 Government-furnished property.

None.

2. REFERENCES

COAST GUARD DRAWINGS

Coast Guard Drawing 418A-WMSL-100-001, Rev B, General Arrangements

Coast Guard Drawing 418A-WMSL-801-001, Rev B, Booklet of General Plans

Coast Guard Drawing 750-WMSL-516-002, Rev K, Chilled Water System Diagram (ASC516002)

COAST GUARD PUBLICATIONS

Surface Forces Logistics Center Standard Specification 0000 (SFLC Std Spec 0000), 2022, General Requirements

Surface Forces Logistics Center Standard Specification 5000 (SFLC Std Spec 5000), 2022, Auxiliary Machinery Systems

OTHER REFERENCES

None.

3. REQUIREMENTS

3.1 General.

3.1.1 CIR. The Contractor must submit a CIR for the inspections listed in the following paragraph(s):

- 3.3.1 Hose inspection and verification

3.1.2 Tech Rep.

Not applicable.

3.1.3 Protective measures. The Contractor must furnish and install all protective measures in accordance with SFLC Std Spec 0000, paragraph 3.3.3 (Vessel component, space, and equipment protection).

3.1.4 Interferences. The Contractor must handle all interferences in accordance with SFLC Std Spec 0000, paragraph 3.3.5 (Interferences). Known interferences include, but are not limited to the following:

- Deck plates
- Piping
- Electrical wiring & cables
- Machinery

NOTE

Coast Guard personnel will operate all shipboard machinery and equipment.

3.2 Operational test, initial. Prior to commencement of work, the Contractor must witness Coast Guard personnel perform an initial operational test of all items or shipboard devices to be disturbed, used, repaired, or altered, to demonstrate existing operational condition. Submit a CFR.

3.3 Hose renewal. The Contractor must renew the hose assemblies for the Wave Guide Dryer in accordance with SFLC Std Spec 5000, Appendix C, Paragraph C2.2 (Hose assemblies). Notify the CG Inspector at least 5 business days prior to removing hoses to allow the CG to conduct a proper lay-up of components prior to work commencing.

3.3.1 Hose inspection and verification. The attached tables show an approximation of hose lengths, sizes, part numbers, and fittings to be renewed that are listed for bidding purposes only. The Contractor must validate the hoses and fittings requiring renewal, noting any deviations from the tables. To prevent potential delays, submit a CIR providing proof of procurement of materials for the new hoses.

3.3.2 Prior to each hose disconnection, the Contractor must record equipment, supply, and return line information for use in later reconnection. Temporarily tag/label the hoses and transfer tags/labels to the new hoses to aid in reinstallation.

3.3.3 System fluid disposal. The Contractor must drain all existing fluids from the designated hoses; dispose of removed fluids in accordance with all applicable Federal, state, and local regulations. In the process of removal of hoses, the Contractor must not dispose any fluid in tanks or bilges. Submit a CFR documenting the amount of fluids removed.

NOTE

Some systems may require complete draining to remove hoses. Additional fluid required to be removed (outside of the designated hoses) will be subject to a change request.

3.3.4 Immediately after disconnecting or removing hoses, the Contractor must completely seal all openings to the rest of the system using threaded caps, threaded plugs, or bolt-on blanks made of durable plastic or sheet-metal that is no less than 1/16-inch thick.

NOTE

Plastic bags, rubber gloves, and rags of any kind are prohibited from being used to prevent leaking from hoses and for system protection.

3.3.5 The Contractor must template new hose length from each removed hose. New hose type and size must be determined from hose removed. Select hoses may require in-place measurement and remain in place until replacement hose is ready for installation to minimize system down time. If hose has excess length, verify with CG inspector if excess length is required. Renew hose end fittings. Renew all o-rings, seals, two part clamps, and mounting bolts. The Contractor must retain the removed hoses and turn over to the Coast Guard upon installation of the new hoses. Submit a CFR for any additional hose connections that require replacement not on the renewed hose.

3.3.6 Hydrostatic test. The Contractor must hydrostatically test all new hose assemblies with their attached fittings. Test pressure must be 150% of the rated working pressure of the hose. Ensure no leakage from or permanent deformation of pressure-containing parts by repairing all leaks and discrepancies. Submit a CFR documenting all certifications of pressure test results.

3.3.7 Flush the hoses following hydrostatic testing and cap the ends to prevent contamination. Flush to remove all contaminates to achieve cleanliness Grade A prior to installation.

3.3.8 Fluid renewal. The Contractor must renew all removed system fluids. Verify the replacement fluid type and quantity with the Coast Guard Inspector prior to reintroduction into the system.

3.3.9 Hose tags. The Contractor must provide new stamped or engraved metal hose tags with the following bulleted information, in accordance with SFLC Std Spec 5000, Figure C-1. Tag installation must be done in a manner that does not interfere with the normal hose flexing motion. Attach hose tags to their respective hose using metal strapping. Verify the tag can be slightly moved by hand, allowing the hose to expand and contract as designed while minimizing chaffing.

- Hose Log Item Number (Serial Number)
- Hydrostatic Test Pressure (psi)
- Hydrostatic Test Date (DD/MM/YY)
- Service Life (Replacement Date, 12 years following installation date) Date (QTR "Q"/FY)

3.4 Hose Documentation. For each renewed hose assembly, the Contractor must submit, at a minimum, the information listed below in Microsoft Excel format. Submit information via CFR.

- Hose Number
- System
- Associated Assembly (i.e. A/C Inlet, Oil Cooler Return, etc.)
- Item (Hose, Expansion Joint, etc.)
- Location (Compartment Number)
- Hose Length (in.)
- Hose Diameter (in.)
- Hose Brand
- Hose Part Number
- Hose Construction/Type (Synth Rubber, Teflon, Metal, Plastic, etc.)
- Fitting #1 Description/Material
- Fitting #1 Brand
- Fitting #1 Part Number
- Fitting #2 Description/Material
- Fitting #2 Brand
- Fitting #2 Part Number

- Hose Rated Pressure (psi)
- Hydrostatic Test Pressure (psi)
- Hydrostatic Test Date
- Hose Replacement Date

NOTE

Coast Guard personnel will operate all shipboard machinery and equipment.

3.5 Operational test, post repairs. After completion of work, the Contractor must thoroughly test, in the presence of the Coast Guard Inspector and demonstrate all items or shipboard devices that have been disturbed, used, repaired, altered, or installed to be in satisfactory operating condition without leaks. Submit a CFR.

4. NOTES

TABLE 1 – WAVE GUIDE DRYER HOSES

HOSE SERIAL #	LENGTH (IN.)	SIZE	PART NUMBER	HOSE MATERIAL	FITTING #1	FITTING #2	DESIGN PRESS (PSI)
TRS-C/W-001 or CWS-F-081	15x21 (dogleg)	-20	2580-20	Synthetic Rubber	3/4" 150# Flange	2-5/16" CPV Fitting	150
TRS-C/W-002 or CWR-F-081	15x21 (dogleg)	-20	2580-20	Synthetic Rubber	3/4" 150# Flange	2-5/16" CPV Fitting	150

WORK ITEM 24: Refrigeration Plant Flexible Hoses, Renew

1. SCOPE

1.1 Intent. This work item describes the requirements for the Contractor to renew the designated hose assemblies and expansion joints for equipment listed in the Table 1.

TABLE 1– LIST OF EQUIPMENT FOR HOSE RENEWAL

EQUIPMENT	LOCATION	MATERIAL	HOSE LISTING
Refrigeration Unit No. 1	2-64-0-E	Various	Table 2
Refrigeration Unit No. 2	2-64-0-E	Various	Table 3

1.2 Government-furnished property.

None.

2. REFERENCES

COAST GUARD DRAWINGS

Coast Guard Drawing 750-WMSL-505-006, Rev D, List of Hoses

Coast Guard Drawing 750-WMSL-516-001, Rev E, A/C & Refrigeration Piping Diagram (ASC516001)

Coast Guard Drawing 750-WMSL_520_1, Rev H, Seawater Cooling System

COAST GUARD PUBLICATIONS

Surface Forces Logistics Center Standard Specification 0000 (SFLC Std Spec 0000), 2022, General Requirements

Surface Forces Logistics Center Standard Specification 5000 (SFLC Std Spec 5000), 2022, Auxiliary Machine Systems

OTHER REFERENCES

None.

3. REQUIREMENTS

3.1 General.

3.1.1 CIR. The Contractor must submit a CIR for the inspections listed in the following paragraph(s):

- 3.3.1 Hose inspection and verification

3.1.2 Tech Rep.

Not applicable.

3.1.3 Protective measures. The Contractor must furnish and install all protective measures in accordance with SFLC Std Spec 0000, paragraph 3.3.3 (Vessel component, space, and equipment protection).

3.1.4 Interferences. The Contractor must handle all interferences in accordance with SFLC Std Spec 0000, paragraph 3.3.5 (Interferences). Known interferences include, but are not limited to the following:

- Deck plates
- Piping
- Electrical wiring & cables
- Machinery
- Residual refrigerant

3.1.5 Refrigeration handling. The Contractor must provide the COR documentation that ensures all prime and subcontractors servicing CFC or HDFC refrigerant-based Air Conditioning and Refrigeration (AC&R) equipment hold a current Environmental Protection Agency (EPA) Technician Certification, Type IV (Universal Certification), and meet all state and local regulations and licensing requirements.

3.1.6 Refrigerant draining and recovery. The Contractor must ensure all vessels' AC unit refrigerant is drained, recovered and disposed of into a container in accordance with all federal, state and local environmental regulations.

NOTE
Coast Guard personnel will operate all shipboard machinery and equipment.

3.1.7 Work coordination. The Contractor must coordinate the accomplishment of this work item with the following work items :

- Refrigeration Plant, System Groom

3.2 Operational test, initial. Prior to commencement of work, the Contractor must witness Coast Guard personnel perform an initial operational test of all items or shipboard devices to be disturbed, used, repaired, or altered, to demonstrate existing operational condition. Submit a CFR.

3.3 Hose renewal. *The Contractor must renew the* hose assemblies *for the equipment listed in Table 1* in accordance with SFLC Std Spec 5000, Appendix C, Paragraph C2.2 (Hose assemblies). Notify the CG Inspector at least 24 hours prior to removing hoses.

3.3.1 Hose inspection and verification. The attached tables show an approximation of hose lengths, sizes, part numbers, and fittings to be renewed that are listed for bidding purposes only. The Contractor must validate the hoses and fittings requiring renewal, noting any deviations from the tables. To prevent potential delays, submit a CIR providing proof of procurement of materials for the new hoses.

3.3.2 Prior to each hose disconnection, the Contractor must record equipment, supply, and return line information for use in later reconnection. Temporarily tag/label the hoses and transfer tags/labels to the new hoses to aid in reinstallation.

3.3.3 System fluid disposal. The Contractor must drain all existing fluids from the designated hoses; dispose of removed fluids in accordance with all applicable Federal, state, and local regulations. In the process of removal of hoses, the Contractor must not dispose any fluid in tanks or bilges. Submit a CFR documenting the amount of fluids removed.

NOTE

Some systems may require complete draining to remove hoses. Additional fluid required to be removed (outside of the designated hoses) will be subject to a change request.

3.3.4 Immediately after disconnecting or removing hoses, the Contractor must completely seal all openings to the rest of the system using threaded caps, threaded plugs, or bolt-on blanks made of durable plastic or sheet-metal that is no less than 1/16-inch thick.

NOTE

Plastic bags, rubber gloves, and rags of any kind are prohibited from being used to prevent leaking from hoses and for system protection.

3.3.5 The Contractor must template new hose length from each removed hose. New hose type and size must be determined from hose removed. Select hoses may require in-place measurement and remain in place until replacement hose is ready for installation to minimize system down time. If hose has excess length, verify with CG inspector if excess length is required. Renew hose end fittings. Renew all o-rings, seals, two-part clamps, and mounting bolts. Dispose of removed hoses in accordance with all applicable Federal, state, and local regulations. Submit a CFR for any additional hose connections that require replacement not on the renewed hose.

3.3.6 Hydrostatic test. The Contractor must hydrostatically test all new hose assemblies with their attached fittings. Test pressure must be 150% of the rated working pressure of the hose. Ensure no leakage from or permanent deformation of pressure-containing parts by repairing all leaks and discrepancies. Submit a CFR documenting all certifications of pressure test results.

3.3.7 Flush the hoses following hydrostatic testing and cap the ends to prevent contamination.

3.3.8 Fluid renewal. The Contractor must renew all removed system fluids. Verify the replacement fluid type and quantity with the Coast Guard Inspector prior to reintroduction into the system.

3.3.9 Hose tags. The Contractor must provide new stamped or engraved metal hose tags with the following bulleted information, in accordance with SFLC Std Spec 5000, Figure C-1. Tag installation must be done in a manner that does not interfere with the normal hose flexing motion. Attach hose tags to their respective hose using metal strapping. Verify the tag can be slightly moved by hand, allowing the hose to expand and contract as designed while minimizing chaffing.

- Hose Log Item Number (Serial Number)
- Hydrostatic Test Pressure (psi)
- Hydrostatic Test Date (DD/MM/YY)

- Service Life (Replacement Date, 12 years from installation date) Date (QTR "Q"/FY)

3.4 Hose Fitting Documentation. For each renewed hose assembly, the Contractor must submit the information listed below in Microsoft Excel format. A template for the information will be provided by the COR. Submit a CFR.

- Hose Number
- System
- Description (i.e. #1 A/C Inlet)
- Location (Compartment Number)
- Length (in.)
- Part No.
- Material
- Size (in.)
- Fitting #1
- Fitting #2
- Design Pressure (psi)
- Hydrostatic Pressure (psi)

NOTE

Coast Guard personnel will operate all shipboard machinery and equipment.

3.5 Operational test, post repairs. After completion of work, the Contractor must thoroughly test, in the presence of the Coast Guard Inspector and demonstrate all items or shipboard devices that have been disturbed, used, repaired, altered, or installed to be in satisfactory operating condition. Submit a CFR.

4. NOTES

TABLE 2 - REFRIGERATION UNIT NO. 1 (COMPARTMENT: 2-64-0-E)

HOSE SERIAL #	LENGTH (IN.)	SIZE (IN.)	PART NUMBER	HOSE MATERIAL	FITTING #1	FITTING #2	DESIGN PRESS (PSI)
1REF-R-001	7	5/8	52332	BRZ	Solder	Solder	595
1REF-R-002	15	2-1/8	52338	BRZ	Solder	Solder	505
1-RSS-F-007	16x16 (dogleg)	1-1/2		SST	1.5" Flange 150#	1.5" Flange 150#	240
1REF-S/W-001	14x14 (dogleg)	2	AE2580	Rubber	1.25" Flange 150#	1.25" Flange 150#	60
1REF-S/W-002	13x14 (dogleg)	2	AE2580	Rubber	1.25" Flange 150#	1.25" Flange 150#	60

HOSE SERIAL #	LENGTH (IN.)	SIZE (IN.)	PART NUMBER	HOSE MATERIAL	FITTING #1	FITTING #2	DESIGN PRESS (PSI)
1REF-S/W-003	14x14 (dogleg)	1-1/4	AE2580	Rubber	.75" Flange 150#	.75" Flange 150#	60
1REF-S/W-004	14x14 (dogleg)	1-1/4	AE2580	Rubber	.75" Flange 150#	.75" Flange 150#	60

TABLE 3 - REFRIGERATION UNIT NO. 2 (COMPARTMENT: 2-64-0-E)

HOSE SERIAL #	LENGTH (IN.)	SIZE (IN.)	PART NUMBER	HOSE MATERIAL	FITTING #1	FITTING #2	DESIGN PRESS (PSI)
2REF-R-001	7	5/8	52332	BRZ	Solder	Solder	595
2REF-R-002	15	2-1/8	52338	BRZ	Solder	Solder	505
2-RSS-F-007	16x16 (dogleg)	1-1/2		SST	1.5" Flange 150#	1.5" Flange 150#	240
2REF-S/W-001	14x14 (dogleg)	2	AE2580	Rubber	1.25" Flange 150#	1.25" Flange 150#	60
2REF-S/W-002	13x14 (dogleg)	2	AE2580	Rubber	1.25" Flange 150#	1.25" Flange 150#	60
2REF-S/W-003	14x14 (dogleg)	1-1/4	AE2580	Rubber	.75" Flange 150#	.75" Flange 150#	60
2REF-S/W-004	14x14 (dogleg)	1-1/4	AE2580	Rubber	.75" Flange 150#	.75" Flange 150#	60

WORK ITEM 25: Fire Detection System, Inspect and Test

APM: Do not edit any part of the Work Item Title.

1. SCOPE

1.1 Intent. This work item describes the requirements for the Contractor to inspect and test Fire Detection System.

1.2 Government-furnished property.

None.

2. REFERENCES

COAST GUARD DRAWINGS

Coast Guard Drawing 418A-WMSL-100-001, Rev B, General Arrangements

Coast Guard Drawing 418A-WMSL-801-001, Rev A, Booklet of General Plans

Coast Guard Drawing 750-WMSL-436-011, Rev E, Fire Detection Sys Deck Plan (ASC436009)

Coast Guard Drawing 750-WMSL-436-013, Rev C, Fire Detection Sys Cable Running Sheets (ASC436010)

Coast Guard Drawing 750-WMSL-436-014, Rev -, Fire Detection and Control System Schematic (ASC436028)

COAST GUARD PUBLICATIONS

Surface Forces Logistics Center Standard Specification 0000 (SFLC Std Spec 0000), 2020, General Requirements

Surface Forces Logistics Center Standard Specification 3042 (SFLC Std Spec 3042), 2020, Shipboard Electrical Cable Removal, Relocation, Splice, Repair, and Installation

Surface Forces Logistics Center Standard Specification 5550 (SFLC Std Spec 5550), 2022, Fire Prevention and Response

Coast Guard Technical Publication (TP) 9919, SWBS 436, Feb 2022, Fire and Smoke Detection System (For Hull 757)

OTHER REFERENCES

National Fire Protection Association (NFPA) 72, 2022 Edition, National Fire Alarm and Signaling Code

3. REQUIREMENTS

3.1 General.

3.1.1 CIR. The Contractor must submit a CIR for the inspections listed in the following paragraph(s):

- 3.3 System inspect and test.

3.1.2 Tech Rep. The Contractor must provide the services of a Qualified Technical Representative, who must demonstrate familiarity with marine fire and smoke detection and alarm systems, and fulfill the requirements of this section.

3.1.2.1 The Tech Rep must advise on repair methods when needed to restore the system to its operational capability according to the design documents included in Section 2, and the requirements of NFPA 72.

3.1.2.2 The Tech Rep must ensure the system is compliant with the standards governing the condition of the fire detection system design and product approval. Specifically, its respective maritime classification society type approval or NRTL listing.

3.1.2.3 The Tech Rep must be qualified and experienced in accordance with the requirements of NFPA 72, paragraph 10.5.3, and provide evidence of qualification according to the means of qualification in NFPA 72 paragraph 10.5.3.4. Licensure by the state licensing board (from the state in which the work is performed) as a contractor specialized in fire protection systems is an acceptable form of evidence for the purposes of this WI. Requirements fundamental to establishing this qualification are listed in Section 4.

3.1.2.4 The Tech Rep must review and understand the contents of the references of Section 2, and be responsible for complying with the standards of testing according to NFPA 72 and the manufacturer's instructions.

3.1.2.5 Submit the Tech Rep's name and résumé to the COR within 5 business days of contract award. The resume must include evidence of the Tech Rep's qualifications for all requirements of this section (Section 3.1.2).

3.1.3 Protective measures. The Contractor must furnish and install all protective measures in accordance with SFLC Std Spec 0000, paragraph 3.3.3 (Vessel component, space, and equipment protection).

3.1.5 Electrical testing. The Contractor must conduct electrical testing required by this specification in accordance with NFPA 72 and manufacturer's instructions.

3.1.6. Fire Readiness. While the Fire Alarm system is down for testing, the Contractor must provide personnel in that space who can communicate with Ship's Force in the event of a fire. The Contractor must submit a Fire Plan addressing the duration of the fire alarm system losses and their methods of communication with the crew to communicate in an emergency, and any other applicable issues from paragraphs 3.1.2 and 3.1.3 of SFLC Std Spec 5550.

3.2 Testing Preparation. The Contractor must make all preparations for fire alarm testing specifically dictated by this paragraph, as well as those required by NFPA 72 and the manufacturer's instructions.

3.2.1 Required Testing Tools. The Contractor must provide and be capable of operating recommended test equipment in accordance with the OEM Service and Maintenance Manual, as referenced in Section 2. Recommended tools include:

- Testfire: multi-stimulus detector tester.
- Salwico Solo 330: smoke detector tester.
- Salwico Solo 461: heat detector tester.
- Salwico VD T-1: heat detector tester.

3.2.1.1 Smoke detector testers for sensitivity testing must not administer an unmeasured concentration of smoke, according to the requirements of NFPA 72, section 14.4.4.3.6.

3.2.2 Password protection. Fire alarm panel configuration software is password protected. Prior to start work on this item, the Tech Rep must receive maintenance-level configuration access password from the system manufacturer.

3.2.3 Test Plan. The Contractor must, in consultation with the Tech Rep, develop a test plan to clearly define the scope of the fire detection system testing, and submit to the COR for approval. The test plan must include the annually required tests of NFPA 72 table 14.4.3.2, as applicable to the system defined by OEM tech manuals and the system drawings. Submit a CFR.

3.2.3.1 Annually required tests according to NFPA 72 table 14.4.3.2 must be planned for all (100%) field devices. Sensitivity testing according to NFPA 72 paragraph 14.4.4.3 must be planned for minimum of 50% of all field devices.

3.2.3.2 The test plan must record test data according to the specific detector's identifier, which can be referenced for purposes of maintenance history.

3.2.3.3 The Contractor must submit the test plan within 5 business days of contract award.

3.2.4 The Contractor must request clarification, if needed, on any technical data required for test planning prior to submission of the test plan.

3.3 Fire detection system inspect and test. The Contractor must perform inspection and test of the fire detection and alarm system in accordance with the test plan, NFPA-72, and OEM tech manuals. The Contractor must perform 100 % test on all field devices listed in the system drawing. Submit CIR.

3.3.1 The Contractor must check Fire Alarm Control Panel batteries as required by NFPA 72. If testing is unsatisfactory, supply and install sealed lead acid batteries mounted inside Fire Alarm Control Panel in accordance with the OEM tech manual. Submit a CFR.

NOTE

The Contractor must perform only applicable test on the Fire Alarm System. Some of the test identified on the attached Data Sheet may not be required on installed Fire Alarm System on the Cutter.

3.3.2 Testing must include fault detection tests, control unit and repeater panel tests, cable tests, and firmware verification for all control hardware included in the fire alarm control panel and supervisory panel. Submit a CFR.

3.3.2.1 Perform applicable test as identified in NFPA Standard 72 Table 14.4.3.2, record on a suitable checklist created for the purpose of this test. Example checklist which may be used as a guide is included in Section 4. The Contractor must include the proposed checklist as part of the test plan. Submit a CFR.

3.3.2.2 With assistance from ship's crew, verify signals from fire alarm control panel to CGMCS display console.

3.3.2.3 The Contractor must verify operation of the supervisory (repeater) panel on the bridge (pilothouse).

3.4 Repairs According to CIR. When directed by the COR, the Contractor must make repairs and conduct calibration as needed to restore compliance with the fire detection and alarm system design standards.

3.5 Technical Certification. The Contractor must certify that the fire alarm system is operating properly by signing the end of the test document with identification, company, and licensing/credentialing information, including specific discrepancies which could not be corrected during the testing and inspection process.

3.5.1 If repairs were directed, this step must only be completed once repairs are certified completed by the COR.

3.6 System Restoration – Post Repairs. After completion of work, the Contractor must with ship's force verify that the fire alarm system is operating in its monitoring mode without faults, disablements, or nuisance alarms. Service-level permissions must be disabled.

4. NOTES

4.1 NFPA 72 Service Personnel (Tech Rep) Qualifications.

- Personnel who are factory trained and certified for the specific type and brand of system being serviced.
- Personnel who are certified by a nationally recognized certification organization acceptable to the authority having jurisdiction.
- Personnel who are registered, licensed, or certified by a state or local authority to perform service on systems addressed within the scope of NFPA 72, either individually or through their affiliation with an organization.
- Personnel who are employed and qualified by an organization listed by a nationally recognized testing laboratory for the servicing of systems within the scope of NFPA 72.

4.2 NFPA 72 Table 14.4.3.2 Abridged Checklist Relevant to USCG WMSL Fire Alarm System.

Table 14.4.3.2 Testing

	Component	**Initial Acceptance**	**Periodic Frequency**	**Method**
1	All equipment	X		See Table 14.3.1.
2	Control unit			
	(1) Functions	X	Annually	Verify correct receipt of alarm, supervisory, and trouble signals (inputs); operation of evacuation signals and auxiliary functions (outputs); circuit supervision, including detection of open circuits and ground faults; and power supply supervision for detection of loss of ac power and disconnection of secondary batteries.
	(2) Fuses	X	Annually	Verify rating and supervision.

	(3) Interfaced equipment	X	Annually	Verify integrity of single or multiple circuits providing interface between two or more control units. Test interfaced equipment connections by operating or simulating operation of the equipment being supervised. Verify signals required to be transmitted at the control unit.
	(4) Lamps and LEDs	X	Annually	Illuminate lamps and LEDs.
	(5) Primary (main) power supply	X	Annually	Disconnect all secondary (standby) power and test under maximum load, including all alarm appliances requiring simultaneous operation. Reconnect all secondary (standby) power at end of test. Test redundant power supplies separately.
3	Alarm control unit trouble signals			
	(1) Audible and visual	X	Annually	Verify operation of control unit trouble signals. Verify ring-back feature for systems using a trouble-silencing switch that requires resetting.
	(2) Disconnect switches	X	Annually	If control unit has disconnect or isolating switches, verify performance of intended function of each switch. Verify receipt of trouble signal when a supervised function is disconnected.
	(3) Ground-fault monitoring circuit	X	Annually	If the system has a ground detection feature, verify the occurrence of ground-fault indication whenever any installation conductor is grounded.

	(4) Transmission of signals to off-premises location	X	Annually	Actuate an initiating device and verify receipt of alarm signal at the off-premises location.
				Create a trouble condition and verify receipt of a trouble signal at the off-premises location.
				Actuate a supervisory device and verify receipt of a supervisory signal at the off-premises location. If a transmission carrier is capable of operation under a single- or multiple-fault condition, actuate an initiating device during such fault condition and verify receipt of an alarm signal and a trouble signal at the off-premises location.
8	Secondary (standby) power supply	X	Annually	Disconnect all primary (main) power supplies and verify the occurrence of required trouble indication for loss of primary power. Measure or verify the system's standby and alarm current demand using the equipment manufacturer's data and verify the battery's rated capacity exceeds the system's power demand, including the safety margin. Operate general alarm systems for a minimum of 5 minutes and emergency voice communications systems for a minimum of 15 minutes. Reconnect primary (main) power supply at end of test.
9	VRLA battery and charger			Prior to conducting any battery testing, verify by the person conducting the test that all system software stored in volatile memory is protected from loss.

	(1) Temperature test	X	Semiannually	Upon initially opening the cabinet door, measure the internal ambient temperature of the enclosure. Measure the temperature of each battery cell/unit at the negative terminal with an infrared thermometer. Replace any battery cell/unit if its temperature is greater than 18°F (10°C) above the measured internal ambient temperature of the enclosure.
	(2) Charger test	X	Semiannually	With the battery fully charged and connected to the charger, measure the voltage across the battery with a voltmeter. Verify the voltage is within the battery/alarm equipment manufacturer's recommendations. If the voltage is outside of the specified limits, either adjust the charger to within limits or replace the charger. If the charger is adjustable, adjust the output voltage to 2.265 volts, ±0.015 volts, per cell at 77°F (25°C) or as specified by the alarm equipment manufacturer.
	(3) Cell/Unit voltage test	X	Semiannually	With the battery fully charged and connected to the charger, measure the voltage of each cell/unit with a voltmeter. Replace the battery when any cell/unit measures a voltage less than 13.26 volts.
	(4) Ohmic test	X	N/A	When the battery is installed, establish a baseline ohmic value for each battery cell/unit or, where available, use baseline ohmic values provided by the battery or test equipment manufacturer. In either case, record the base line ohmic value on each battery cell/unit.

			Semiannually	With the battery fully charged, measure the internal ohmic value of each battery cell/unit. Record the test date and ohmic value on each cell/unit. Replace the battery when the ohmic measurement of any cell/unit deviates from the established baseline by 30 percent or more for conductance, or 40 percent or more for resistance or impedance. Where the battery or test equipment manufacturer's baseline ohmic values are used, replace the battery when any cell/unit has an internal ohmic value outside of the acceptable range. A load test performed in accordance with item 9(5) is an acceptable alternative for an ohmic test.
	(5) Replacement/Load test		Every 3 years	Replace the battery or conduct a load test of the battery capacity. Load test the battery, based on the manufacturer's specifications for a discharge rate of 3 hours or more, by applying the current indicated for the selected hourly discharge rate continuously until the terminal voltage decreases to the end voltage specified by the manufacturer. Record the test duration and calculate the battery capacity including adjustment for ambient temperature. Replace the battery if capacity is less than or equal to 80 percent or at the next scheduled test interval if battery capacity is less than 85 percent.
11	Remote annunciators	X	Annually	Verify the correct operation and identification of annunciators. If provided, verify the correct operation of annunciators under a fault condition.

15	Conductors — metallic			
	(5) Circuit integrity	X	N/A	For initial and reacceptance testing, confirm the introduction of a fault in any circuit monitored for integrity results in a trouble indication at the FACU. Open one connection at not less than 10 percent of the initiating devices, notification appliances, and controlled devices on every initiating device circuit, notification appliance circuit, and signaling line circuit. Confirm all circuits perform as indicated in Sections 23.5, 23.6, and 23.7.
		N/A	Annually	For periodic testing, test each initiating device circuit, notification appliance circuit, and signaling line circuit for correct indication at the control unit. Confirm all circuits perform as indicated in Sections 23.5, 23.6, and 23.7.
17	Initiating devicesh			
	(4) Heat detectors			

	(a) Fixed-temperature, rate-of-rise, rate of compensation, restorable line, spot type (excluding pneumatic tube type)	X	Annually (see 14.4.4.5)	Perform heat test with a listed and labeled heat source or in accordance with the manufacturer's published instructions. Assure that the test method for the installed equipment does not damage the nonrestorable fixed-temperature element of a combination rate-of-rise/fixed-temperature element detector.
	(b) Fixed-temperature, nonrestorable line type	X	Annually	Do not perform heat test. Test functionality mechanically and electrically. Measure and record loop resistance. Investigate changes from acceptance test.
	(c) Fixed-temperature, nonrestorable spot type	X	See Method column	After 15 years from initial installation, replace all devices or have 2 per every 100 detectors laboratory tested. Replace the 2 detectors with new devices. If a failure occurs on any of the detectors removed, remove and test additional detectors to determine either a general problem involving faulty detectors or a localized problem involving 1 or 2 defective detectors.
				If detectors are tested instead of replaced, repeat tests at intervals of 5 years.
				Do not perform heat tests. If verifying electrical continuity or supervision, test mechanically or electrically in accordance with the manufacturer's instructions.
	(5) Manual fire alarm boxes	X	Annually	Operate manual fire alarm boxes in accordance with the manufacturer's published instructions. Test both key-

				operated presignal and general alarm manual fire alarm boxes.
	(7) Smoke detectors — functional test			
	(a) In other than one- and two-family dwellings, system detectors	X	Annually	Test smoke detectors in place to ensure smoke entry into the sensing chamber and an alarm response.j Use smoke or a listed and labeled product acceptable to the manufacturer or in accordance with their published instructions. Other methods listed in the manufacturer's published instructions that ensure smoke entry from the protected area, through the vents, or into the sensing chamber can be used. Magnets are not acceptable for smoke entry tests.
	(b) Single- and multiple-station smoke alarms connected to protected premises systems	X	Annually	Perform a functional test on all single- and multiple-station smoke alarms connected to a protected premises fire alarm system by putting the smoke alarm into an alarm condition.
	(f) Projected beam type	X	Annually	Test the detector by introducing smoke, other aerosol, or an optical filter into the beam path.
	(g) Smoke detector with built-in thermal element	X	Annually	Operate both portions of the detector independently as described for the respective devices.

	(h) Smoke detectors with control output functions	X	Annually	Verify that the control capability remains operable even if all of the initiating devices connected to the same initiating device circuit or signaling line circuit are in an alarm state.
	(8) Smoke detectors in other than one- and two-family dwellings, system detectors — sensitivity testing	N/A	See 14.4.4.3	Perform any of the following tests to ensure that each smoke detector is within its listed and marked sensitivity range:k
				(1) Calibrated test method
				(2) Manufacturer's calibrated sensitivity test instrument
				(3) Listed control equipment arranged for the purpose
				(4) Smoke detector/control unit arrangement whereby the detector causes a signal at the control unit when its sensitivity is outside its listed sensitivity range
				(5) Other calibrated sensitivity test method approved by the authority having jurisdiction
20	Interface equipmentn	X	See 14.4.4.4	Test interface equipment connections by operating or simulating the equipment being supervised. Verify signals required to be transmitted are received at the control unit. Test frequency for interface equipment is the same as the frequency required by the applicable NFPA standard(s) for the equipment being supervised.

22	Alarm notification appliances			
	(1) Audibleo	X	N/A	For initial and reacceptance testing, measure sound pressure levels for alert tone signals and evacuation signal tones with a sound level meter meeting ANSI/ASA S1.4, *Electroacoustics — Sound Level Meters — Part 1: Specifications,* Type 2 requirements. Measure sound pressure levels to determine if they comply with Chapter 18 and the required performance, as documented in accordance with 7.3.4. Set the sound level meter in accordance with ANSI/ASA S3.41, *Audible Emergency Evacuation (E2) and Evacuation Signals with Relocation Instructions (ESRI),* using the time-weighted characteristic F (FAST).
		N/A	Annually	For periodic testing, verify the operation of the notification appliances.p
26	Special procedures			
	(1) Alarm verification	X	Annually	Verify time delay and alarm response for smoke detector circuits identified as having alarm verification.
27	Supervising station alarm systems — receiving equipment			

	(1) All equipment	X	Monthly	Perform tests on all system functions and features in accordance with the equipment manufacturer's published instructions for correct operation in conformance with the applicable sections of Chapter 26.
				Actuate initiating device and verify receipt of the correct initiating device signal at the supervising station within 90 seconds. Upon completion of the test, restore the system to its functional operating condition.
				If test jacks are used, perform the first and last tests without the use of the test jack.
	(2) Digital alarm communicator receiver (DACR)	X	Monthly	Disconnect each transmission means in turn from the DACR, and verify audible and visual annunciation of a trouble signal in the supervising station.
				Cause a signal to be transmitted on each individual incoming DACR line (path) at least once every 6 hours (24 hours for DACTs installed prior to adoption of the 2013 edition of *NFPA 72*). Verify receipt of these signals.