NAVAIR 17-1-114.4.1
1 March 2022
Change 1 - 1 August 2023

TECHNICAL MANUAL

VOLUME 4

INTERMEDIATE, AND DEPOT MAINTENANCE WITH ILLUSTRATED PARTS BREAKDOWN

INSPECTION AND PROOFLOAD TESTING OF LIFTING SLINGS FOR C-130 AIRCRAFT AND RELATED COMPONENTS

This manual supersedes NAVAIR 17-1-114.4.1 dated 1 April 2017 with Change 1 dated 1 November 2019.

This manual is incomplete without NAVAIR 17-1-114.1.

DISTRIBUTION STATEMENT C. Distribution authorized to U.S. Government agencies and their contractors to protect publications required for official use or for administrative or operational purposes, determined on 1 March 2022. Other requests for this document shall be referred to Commanding Officer, Naval Air Systems Command (PMA 207), 46990 Hinkle Road, Unit 8, Bldg. 419, Patuxent River, MD 20670-1627.

DESTRUCTION NOTICE - For unclassified, limited documents, destroy by any method that will prevent disclosure of contents or reconstruction of the document.

PUBLISHED BY DIRECTION OF THE COMMANDER, NAVAL AIR SYSTEMS COMMAND

0817LP0028305

INTERMEDIATE AND DEPOT MAINTENANCE
SLING ASSEMBLY - REFRIGERATION UNIT INSTALLATION WITH ILLUSTRATED PARTS BREAKDOWN
PART NUMBER 3402242-1

Reference Material

Title	Number
Depot Level Rework Program for Support Equipment End Items	NAVAIRINST 13680.1
Inspection and Proofload Testing of Lifting Slings for Aircraft and Related Components	NAVAIR 17-1-114.1

Alphabetical Index

Subject	Page No.
Assembly, Refinishing and Lubrication	2
Cleaning and Inspection	1
Disassembly	1
Illustrated Parts Breakdown (IPB)	2
Introduction	1
Notes	2
Proofload Test	2
Repair	2
Usable On Codes	2

Record of Applicable Technical Directives

None

1. INTRODUCTION.

a. The refrigeration unit installation sling assembly is used to lift the refrigeration unit during installation. Refer to figure 1 for application information.

PART NUMBER (CAGE):	3402242-1 (98897)	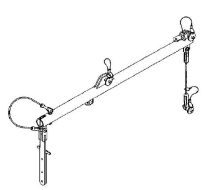
NOMEN-CLATURE:	SLING ASSEMBLY - REFIRGERATION UNIT INSTALLATION	
NSN:	1730-01-006-0933	
SAFE WORKING LOAD:	190 LB	
APPLICATION:	C/KC-130T/J	

Figure 1. Application Information

2. DISASSEMBLY.

a. The refrigeration unit installation sling assembly, P/N 3402242-1 (98897), shall be disassembled in accordance with figure 2. General disassembly of sling components shall be accomplished in accordance with good shop practices.

3. CLEANING AND INSPECTION.

a. Clean sling as necessary in accordance with NAVAIR 17-1-114.1, Work Package (WP) 005 00 to remove dirt, oil, grease and other foreign matter.

b. Perform a detailed inspection of the entire sling assembly in accordance with NAVAIR 17-1-114.1, WP 005 00. Cracks are not acceptable. Leave paint intact and mark any suspect damaged areas. Remove paint from suspect areas and stress areas for Non-Destructive Inspection (NDI).

4. REPAIR.

a. Removal and replacement of hardware and readily available parts is permitted in accordance with applicable SM&R codes in figure 2. There is no repair for pins, screws and other common hardware. Damaged hardware shall be rejected and replaced with new hardware. All hardware shall be inspected prior to assembly. Refer to NAVAIR 17-1-114.1, WP 005 00.

b. In general, surface defects on the sling's structural members, attachments, and fittings such as cracks, nicks and gouges, may be repaired by hand filing and blending with the surrounding area to remove the defect as long as 90 percent or more of the component cross sectional dimension/area is intact. Refer to NAVAIR 17-1-114.1, WP 005 00.

5. ASSEMBLY, REFINISHING AND LUBRICATION.

MATERIALS REQUIRED

Nomenclature	Specification/ Part Number	HMWS Index No.
Epoxy Primer	MIL-PRF-23377	1
Polyurethane Coating	MIL-PRF-85285	2

a. The refrigeration unit installation sling assembly shall be assembled in accordance with figure 2. General assembly of sling components shall be accomplished in accordance with good shop practices.

Epoxy Primer, MIL-PRF-23377 1

b. Prime the refrigeration unit installation sling assembly where primer was removed for inspection or corrosion control purposes using epoxy primer, MIL-PRF-23377, corrosion inhibiting, lead and chromate free, Type II. There is no allowance for primer in holes or threaded areas.

Polyurethane Coating, MIL-PRF-85285 2

c. Paint the refrigeration unit installation sling assembly where paint was removed for inspection or corrosion control purposes using polyurethane coating, MIL-PRF-85285, untinted white (SAE-AMS-STD-595, 7925) or for USMC applications use green (SAE-AMS-STD-595, 24052, 34052 or 34084). There is no allowance for paint in holes or threaded areas.

6. PROOFLOAD TEST.

MATERIALS REQUIRED

Nomenclature	Specification/ Part Number	HMWS Index No.
Eye Nut	3019T16	—
Proofload Tag	—	—
Swaging Sleeve	MS51844-82	—
Wire Rope	M83420/2-002	—

SUPPORT EQUIPMENT REQUIRED

Nomenclature	Part Number
Proofload Adapter	26E0257-1
Proofload Adapter	26E0257-2
Proofload Adapter	26E0257-3

a. Due to non-availability of proofload adapters, the proofload task for this sling is to be performed at a sling depot via NAVAIRINST 13680.1 procedures.

b. Perform proofload test of the refrigeration unit installation sling assembly at assigned depot by restraining at point A and hang weights as shown in figure 3, view A and B.

c. Locally manufacture proofload tag in accordance with NAVAIR 17-1-114.1, WP 005 00. Attach proofload tag to the beam (2, figure 2) using six inches of wire rope (M83420/2-002) and one swaging sleeve (MS51844-82).

7. ILLUSTRATED PARTS BREAKDOWN (IPB).

a. Refer to figure 2. Refer to NAVAIR 17-1-114.1, WP 002 00 for instructions on how to use this IPB.

8. NOTES.

a. See figure 4, view A, for manufacturing details for Cable Assembly (3402242-25).

b. See figure 4, view B, for manufacturing details for Cable Assembly (3402242-35).

9. USABLE ON CODES.

a. The usable on codes for the refrigeration unit installation sling assembly are as follows:

Usable On Code	Units
A	1 thru 36
B	37 and up

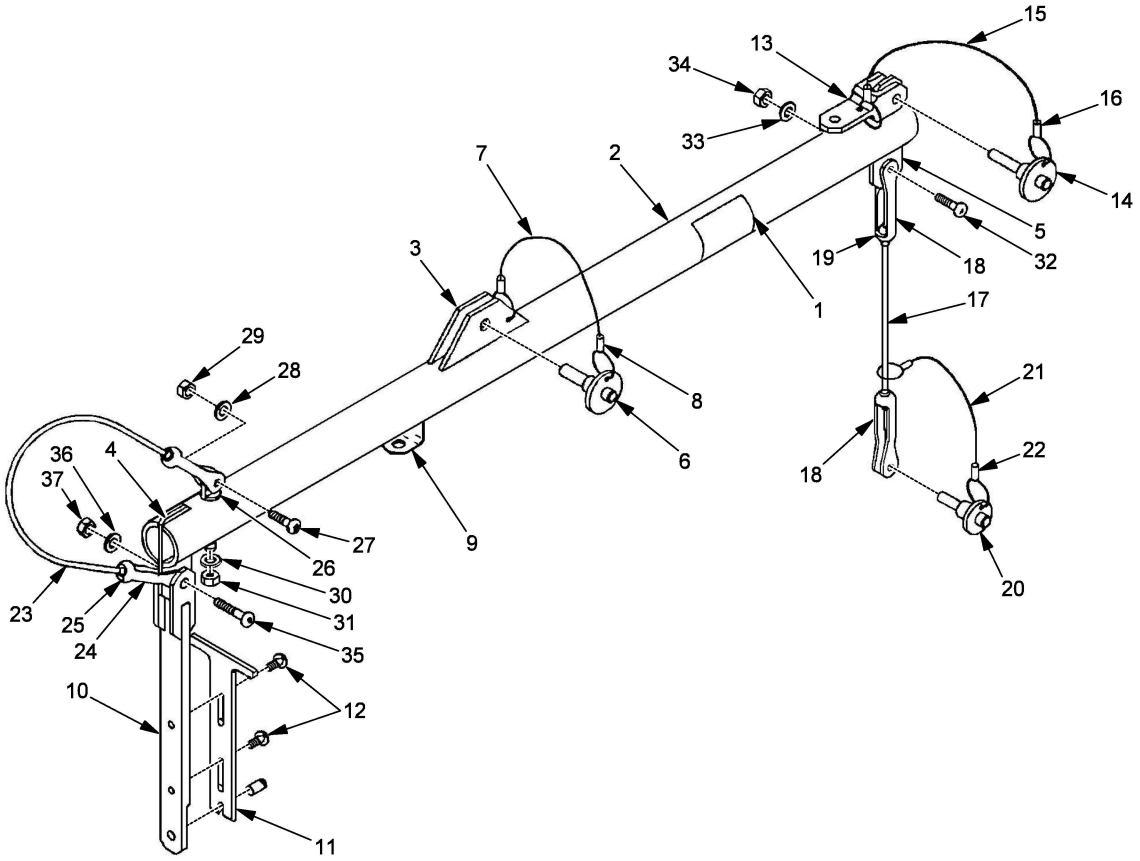

Figure 2. Refrigeration Unit Installation Sling Assembly (3402242-1) (Sheet 1 of 3)

INDEX NO.	PART NUMBER	DESCRIPTION 1 2 3 4 5 6 7	UNITS PER ASSY	USABLE ON CODE	SM&R CODE
	3402242-1	SLING ASSEMBLY, REFRIGERATION UNIT INSTALLATION (98897)	REF		PEOHH
1	LS35265B1C2	. IDENT PLATE (98897)	1		MDGZZ
	3402242-3	. FRAME ASSY (98897)	1		MDGZZ
2	3402242-5	. . BEAM (98897)	1		MDGZZ
3	3402242-7	. . LUG (98897)	2		MDGZZ
4	3402242-9	. . LUG (98897)	1		MDGZZ
5	3402242-11	. . LUG (98897)	1		MDGZZ
6	NAS1335S3S05	. . PIN, QUICK RELEASE	1		XBHZZ
	MS17984C505	. . PIN, QUICK RELEASE (ALT FOR NAS1335S3S05) (ATTACHING PARTS)		*	PAHZZ
7	3402242-33	. . CABLE (98897)	1		MDGZZ
	M83420/2-004	. . WIRE ROPE 0.09 DIA X 12.00 (ALT FOR 3402242-33)		*	PAHZZ
8	28-2G	. . SLEEVE, SWAGING (76691)	2		PAHZZ
		---*---			
9	3402242-39	. . CLIP (98897)	1		MDGZZ
	3402242-31	. HOIST BAR ASSY (98897)	1	A	AGGZZ
	3402242-47	. HOIST BAR ASSY (98897)	1	B	AGGZZ
10	3402242-13	. . BAR ASSY (98897)	1	A	MDGZZ
	3402718-1	. . BAR (98897)	1	B	MDGZZ
11	3402242-41	. . SLIDE ASSY (98897)	1		MDGZZ
12	NAS623-3-2	. . SCREW, MACHINE	2		PAHZZ
	3402242-23	. CLEVIS ASSY (98897)	1		AGGZZ
13	3402242-29	. . CLEVIS (98897)	1	A	MDGZZ
	3402720-1	. . CLEVIS (98897)	1	B	MDGZZ
14	NAS1334S3S08	. . PIN, QUICK RELEASE	1		XBHZZ
	MS17984C408	. . PIN, QUICK RELEASE (ALT FOR NAS1334S3S08) (ATTACHING PARTS)		*	PAHZZ
15	3402242-33	. . CABLE (98897)	1		MDGZZ
	M83420/2-004	. . WIRE ROPE 0.09 DIA X 12.00 (ALT FOR 3402242-33)		*	PAHZZ
16	28-2G	. . SLEEVE, SWAGING (76691)	2		PAHZZ
		---*---			
	3402242-25	. CABLE ASSY (98897)	1		MGGZZ
17	3402242-27	. . CABLE (98897)	1		MGGZZ
	M83420/2-006	. . WIRE ROPE 0.16 DIA X 5.00 (ALT FOR 3402242-27)		*	PAHZZ
18	NAS1435K5	. . TERMINAL-STRAP, CABLE	2		PAHZZ
19	MS20664C5	. . BALL END, WIRE ROPE, SWAGING	2		PAHZZ
20	NAS1334S3S04	. . PIN, QUICK RELEASE	1		XBHZZ
	MS17984C404	. . PIN, QUICK RELEASE (ALT FOR NAS1334S3S04) (ATTACHING PARTS)		*	PAHZZ
21	3402242-33	. . CABLE (98897)	1		MGGZZ
	M83420/2-004	. . WIRE ROPE 0.09 DIA X 12.00 (ALT FOR 3402242-33)		*	PAHZZ
22	28-2G	. . SLEEVE, SWAGING (76691)	2		PAHZZ
		---*---			
	3402242-35	. CABLE ASSY (98897)	1		MGGZZ
23	3402242-37	. . CABLE (98897)	1		MGGZZ
	M83420/2-006	. . WIRE ROPE 0.16 DIA X 6.00 (ALT FOR 3402242-37)		*	PAHZZ
24	NAS1435K5	. . TERMINAL-STRAP, CABLE	2		PAHZZ
25	MS20664C5	. . BALL END, WIRE ROPE, SWAGING	2		PAHZZ
26	AN43B-15A	. . EYE BOLT	1		XBHZZ
	AN43B-15	. . EYE BOLT (ALT FOR AN43B-15A) (ATTACHING PARTS)		*	PAHZZ
27	NAS623-3-7	. . SCREW, MACHINE	1		PAHZZ

Figure 2. Refrigeration Unit Installation Sling Assembly (3402242-1) (Sheet 2)

INDEX NO.	PART NUMBER	DESCRIPTION 1 2 3 4 5 6 7	UNITS PER ASSY	USABLE ON CODE	SM&R CODE
28	AN960-10	. . WASHER, FLAT	1		PAHZZ
	NAS1149F0363P	. . WASHER, FLAT (ALT FOR AN960-10)		*	PAHZZ
29	MS21042-3	. . NUT, SELF-LOCKING	1		PAHZZ
30	AN960-416	. WASHER, FLAT	1		PAHZZ
	NAS1149F0463P	. WASHER, FLAT (ALT FOR AN960-416)		*	PAHZZ
31	AN315-4	. NUT, PLAIN	1		XBHZZ
	AN315-4R	. NUT, PLAIN (ALT FOR AN315-4)		*	PAHZZ
		---*---			
32	NAS623-4-6	. SCREW, MACHINE	1		PAHZZ
33	AN960-416	. WASHER, FLAT	1		PAHZZ
	NAS1149F0463P	. WASHER, FLAT (ALT FOR AN960-416)		*	PAHZZ
34	MS21042-4	. NUT, SELF-LOCKING	1		PAHZZ
35	NAS623-4-12	. SCREW, MACHINE	1		PAHZZ
36	AN960-416	. WASHER, FLAT	1		PAHZZ
	NAS1149F0463P	. WASHER, FLAT (ALT FOR AN960-416)		*	PAHZZ
37	MS21042-4	. NUT, SELF-LOCKING	1		PAHZZ

Figure 2. Refrigeration Unit Installation Sling Assembly (3402242-1) (Sheet 3)

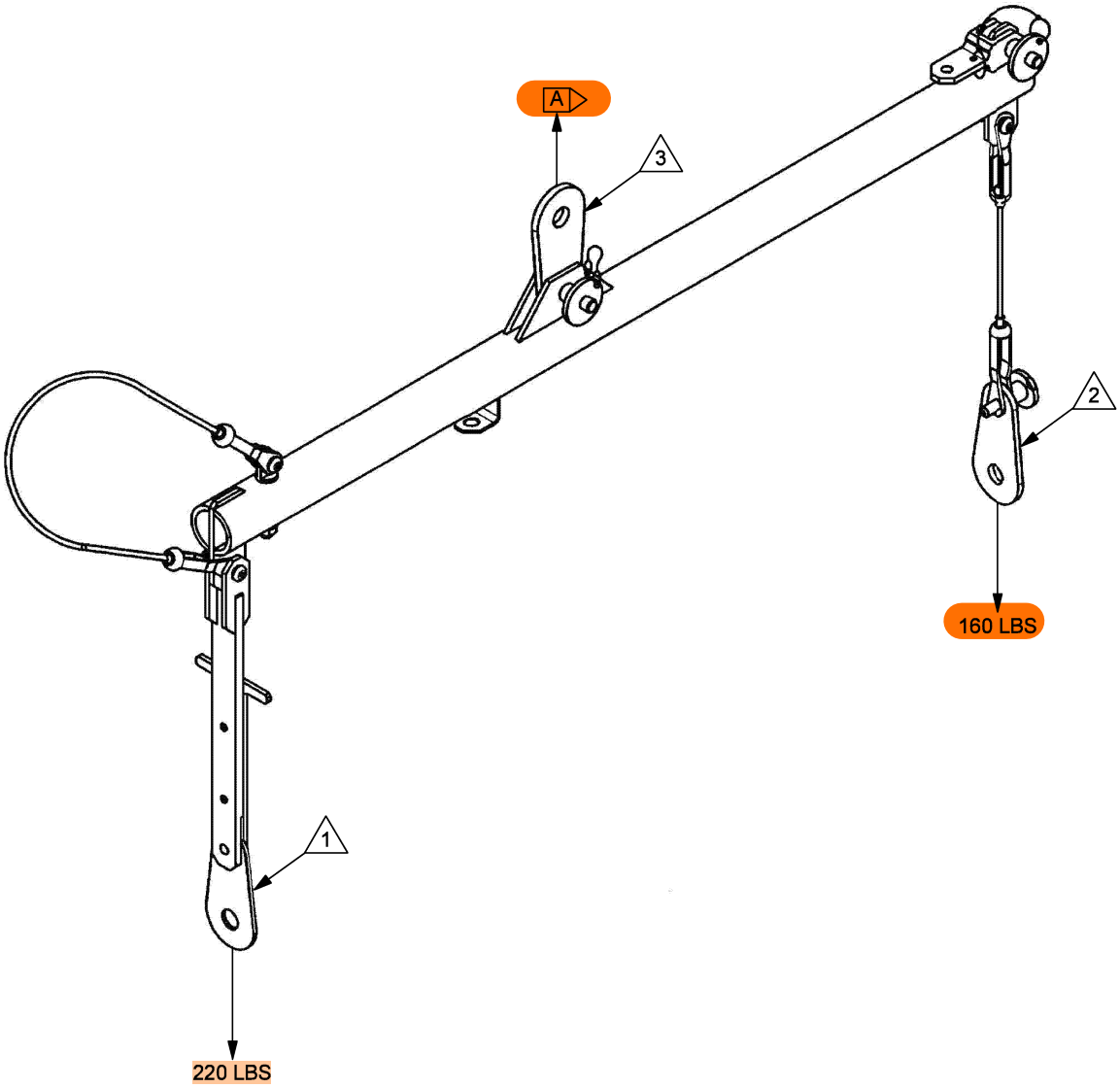

VIEW A

MATERIALS AND EQUIPMENT REQUIRED FOR PROOFLOAD TESTING

ITEM	QTY	DESCRIPTION	PART NUMBER	CAGE	SM&R
1	1	PROOFLOAD ADAPTER	26E0257-1	96916	MDDZZ
2	1	PROOFLOAD ADAPTER	26E0257-2	96916	MDDZZ
3	1	PROOFLOAD ADAPTER	26E0257-3	96916	MDDZZ
4	2	NUT, EYE	3019T16	39428	PAHZZ

Figure 3. Proofload Test of Refrigeration Unit Installation Sling Assembly (3402242-1) (Sheet 1 of 2)

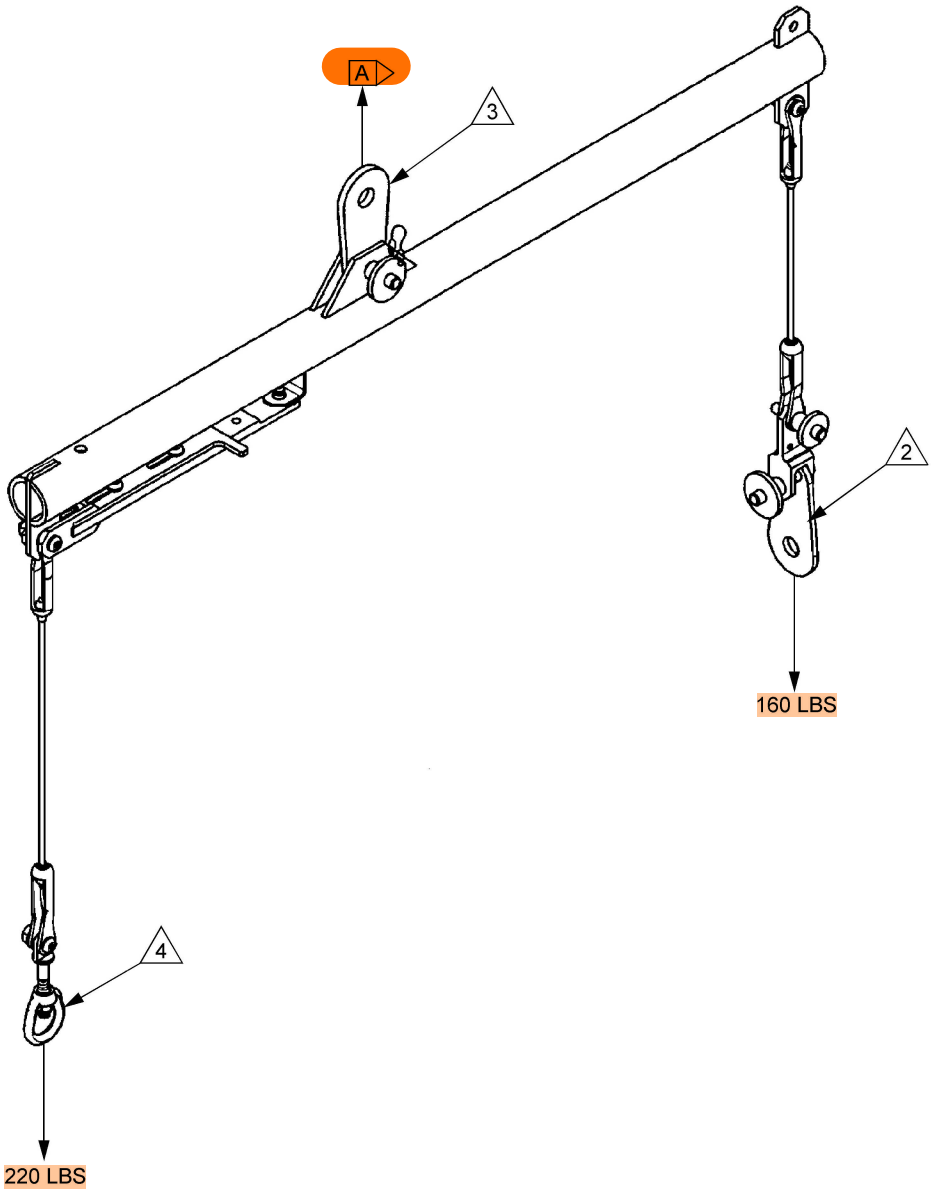

VIEW B

Figure 3. Proofload Test of Refrigeration Unit Installation Sling Assembly (3402242-1) (Sheet 2)

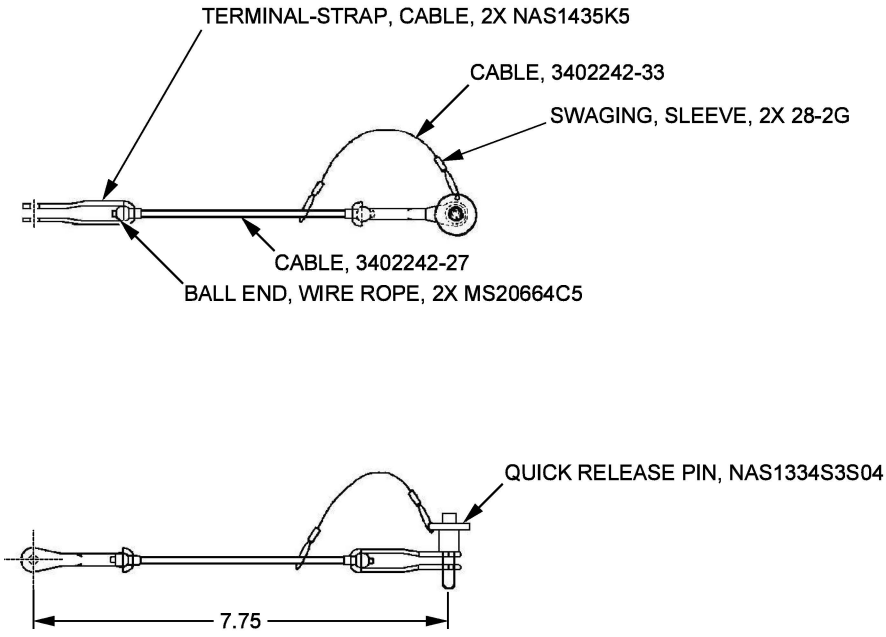

MANUFACTURE OF CABLE ASSEMBLY, P/N 3402242-25 (98897)

VIEW A

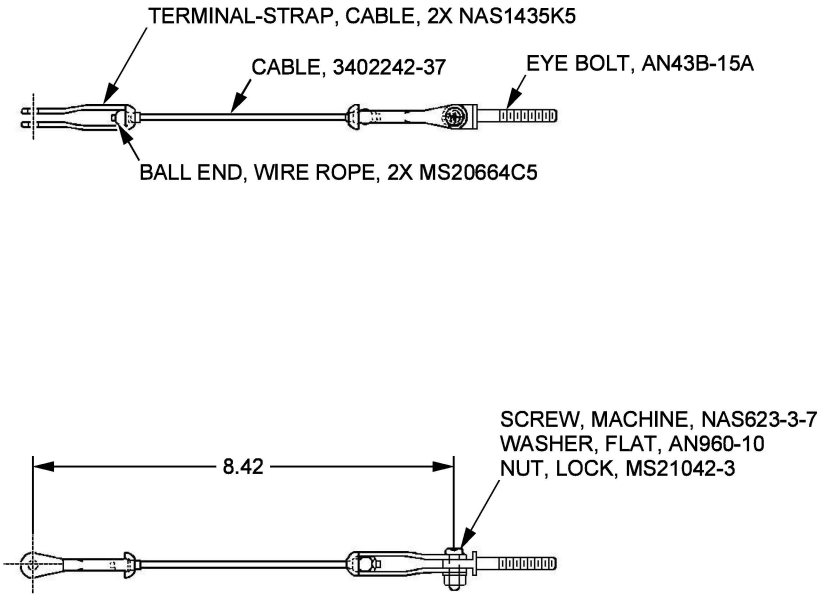

MANUFACTURE OF CABLE ASSEMBLY, P/N 3402242-35 (98897)

VIEW B

Figure 4. Manufacture of Cable Assemblies (3402242-25 and 3402242-35)

INTERMEDIATE AND DEPOT MAINTENANCE
FIXTURE ASSEMBLY - FLIGHT STATION AIR CONDITIONING UNIT INSTALLATION AND REMOVAL WITH ILLUSTRATED PARTS BREAKDOWN
PART NUMBER 3402244-1

Reference Material

Title	Number
Depot Level Rework Program for Support Equipment End Items	NAVAIRINST 13680.1
Inspection and Proofload Testing of Lifting Slings for Aircraft and Related Components	NAVAIR 17-1-114.1

Alphabetical Index

Subject	Page No.
Assembly, Refinishing and Lubrication	2
Cleaning and Inspection	1
Disassembly	1
Illustrated Parts Breakdown (IPB)	3
Introduction	1
Notes	3
Proofload Test	2
Repair	2
Usable On Codes	3

Record of Applicable Technical Directives

None

1. INTRODUCTION.

a. Refer to figure 1 for application information.

PART NUMBER (CAGE):	3402244-1 (98897)	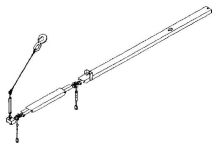
NOMEN-CLATURE:	FIXTURE ASSEMBLY - FLIGHT STATION AIR CONDITIONING UNIT INSTALLATION AND REMOVAL	
NSN:	1730-01-006-0833	
SAFE WORKING LOAD:	185 LB	
APPLICATION:	C/KC-130T/J	

Figure 1. Application Information

2. DISASSEMBLY.

a. The flight station air conditioning unit installation and removal fixture assembly, P/N 3402244-1 (98897), shall be disassembled in accordance with figure 2. General disassembly of fixture components shall be accomplished in accordance with good shop practices.

3. CLEANING AND INSPECTION.

a. Clean fixture as necessary in accordance with NAVAIR 17-1-114.1, Work Package (WP) 005 00 to remove dirt, oil, grease and other foreign matter.

b. Perform a detailed inspection of the entire fixture assembly in accordance with NAVAIR 17-1-114.1, WP 005 00. Cracks are not acceptable. Leave paint intact and mark any suspect damaged areas. Remove paint from suspect areas and stress areas for Non-Destructive Inspection (NDI).

4. REPAIR.

a. Removal and replacement of hardware and readily available parts is permitted in accordance with applicable SM&R codes in figure 2. There is no repair for pins and other common hardware. Damaged hardware shall be rejected and replaced with new hardware. All hardware shall be inspected prior to assembly. Refer to NAVAIR 17-1-114.1, WP 005 00.

b. In general, surface defects on the fixture's structural members, attachments, and fittings such as cracks, nicks and gouges, may be repaired by hand filing and blending with the surrounding area to remove the defect as long as 90 percent or more of the component cross sectional dimension/area is intact. Refer to NAVAIR 17-1-114.1, WP 005 00.

5. ASSEMBLY, REFINISHING AND LUBRICATION.

MATERIALS REQUIRED

Nomenclature	Specification/ Part Number	HMWS Index No.
Epoxy Primer	MIL-PRF-23377	1
Loctite Sealant	ASTM D5363	10
Polyurethane Coating	MIL-PRF-85285	2

a. The flight station air conditioning unit installation and removal fixture assembly shall be assembled in accordance with figure 2. General assembly of fixture components shall be accomplished in accordance with good shop practices.

Epoxy Primer, MIL-PRF-23377 1

b. Prime the flight station air conditioning unit installation and removal fixture assembly where primer was removed for inspection or corrosion control purposes using epoxy primer, MIL-PRF-23377, corrosion inhibiting, lead and chromate free, Type II. There is no allowance for primer in holes or threaded areas.

Polyurethane Coating, MIL-PRF-85285 2

c. Paint the flight station air conditioning unit installation and removal fixture assembly where paint was removed for inspection or corrosion control purposes using polyurethane coating, MIL-PRF-85285, untinted white (SAE-AMS-STD-595, 17925) or for USMC application use green (SAE-AMS-STD-595, 24052, 34052 or 34084). There is no allowance for paint in holes or threaded areas.

Loctite Sealant, ASTM D5363 10

d. Apply sealing, locking, and retaining compound, ASTM D5363, (single-component), Grade A, to the mating threads of the shear bolt (14), self-locking nut (15), and turnbuckle (27) as required

6. PROOFLOAD TEST.

MATERIALS REQUIRED

Nomenclature	Specification/ Part Number	HMWS Index No.
Proofload Tag	—	—
Swaging Sleeve	MS51844-82	—
Wire Rope	M83420/2-002	—

SUPPORT EQUIPMENT REQUIRED

Nomenclature	Part Number
Proofload Adapter	26C0252-1
Proofload Stand	18E8178-1

a. Due to non-availability of proofload adapters, the proofload task for this sling is to be performed at a sling depot via NAVAIRINST 13680.1 procedures.

b. Perform proofload test of the flight station air conditioning unit installation and removal fixture assembly at assigned depot by attaching to proofload stand and hang weights as shown in figure 3. Fixture is to be proofload tested over the full length of the beam.

c. Locally manufacture proofload tag in accordance with NAVAIR 17-1-114.1, WP 005 00. Attach proofload tag to the snap hook (12, figure 2) using six inches of wire rope (M83420/2-002) and one swaging sleeve (MS51844-82).

7. ILLUSTRATED PARTS BREAKDOWN (IPB).

a. Refer to figure 2. Refer to NAVAIR 17-1-114.1, WP 002 00 for instructions on how to use this IPB.

8. NOTES.

a. The flight station air conditioning unit installation and removal fixture assembly is used to install or remove air conditioning unit.

9. USABLE ON CODES.

a. The usable on codes for the flight station air conditioning unit installation and removal fixture assembly are as follows:

Usable On Code	Units
A	1 thru 5
B	6 and up
C	1 thru 14
D	15 and up
E	1 thru 36
F	37 and up

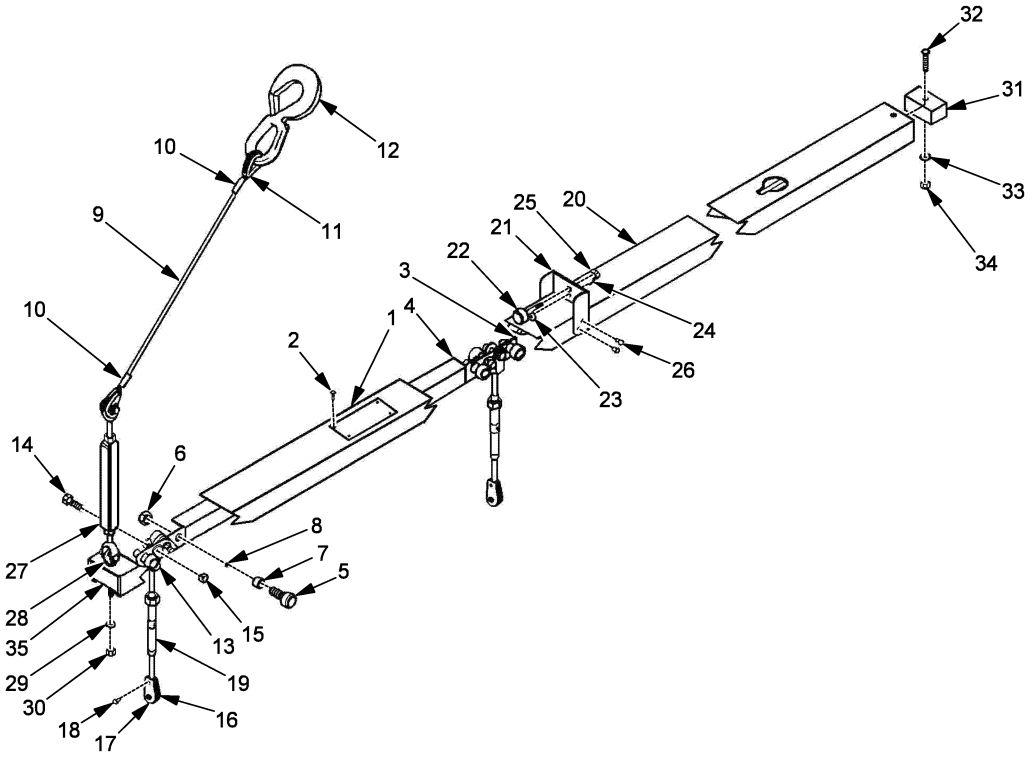

Figure 2. Flight Station Air Conditioning Unit Installation/Removal Fixture Assembly (3402244-1) (Sheet 1 of 2)

INDEX NO.	PART NUMBER	DESCRIPTION 1 2 3 4 5 6 7	UNITS PER ASSY	USABLE ON CODE	SM&R CODE
	3402244-1	FIXTURE ASSEMBLY, FLIGHT STATION AIR CONDITIONING UNIT INSTALLATION AND REMOVAL (98897)	REF		PEOHH
1	LS35130E3B1	. NAMEPLATE (98897)	1	C	XBHZZ
	LS35265E1B1	. NAMEPLATE (98897)	1	D	XBHZZ
		(ATTACHING PARTS)			
2	MS21318-15	. SCREW, DRIVE	4		PAHZZ
		---*---			
	3402244-3	. CARRIAGE ASSY (98897)	1	A	MDGZZ
	3402244-49	. CARRIAGE ASSY (98897)	1	B	MDGZZ
3	3402244-27	. . CARRIAGE PLATE (98897)	2	A	MDGZZ
4	3402244-47	. . ANGLE (98897)	1	A	MDGZZ
	3402244-51	. . ANGLE (98897)	1	B	MDGZZ
5	CF-3/4-SB	. . CAM, FOLLOWER (92563)	6		PAHZZ
		(ATTACHING PARTS)			
6	MS21042-6	. . NUT, SELF-LOCKING, HEXAGON	1		PAHZZ
7	NAS43HT6-23	. . SPACER	1		PAHZZ
		---*---			
8	1728B	. . LUBRICATION FITTING (95879)	6		PAHZZ
	3402244-5	. CABLE ASSY (98897)	1		MDGZZ
9	3402244-25	. . CABLE (98897)	1		XBHZZ
	M84320/2-005	. . WIRE ROPE 0.12 DIA X 35.0 (ALT FOR 3402244-25)		*	PAHZZ
10	28-3-M	. . SWAGING, SLEEVE (76691)	2		PAHZZ
11	G411-1/8	. . THIMBLE, ROPE (75535)	2		PAHZZ
12	G3315-7/16	. . HOOK, SNAP (75535)	1		PAHZZ
13	3402244-7	. JAW END FITTING (98897)	2	E	MDGZZ
	3402722-1	. CLEVIS (98897)	2	F	MDGZZ
		(ATTACHING PARTS)			
14	NAS1104-12	. BOLT, SHEAR	1		XBHZZ
	NAS6204-11	. BOLT, SHEAR (ALT FOR NAS1104-12)		*	PAHZZ
15	MS21042-4	. NUT, SELF-LOCKING, HEXAGON	1		PAHZZ
		---*---			
16	3402244-11	. JAW END FITTING (98897)	2	E	MDGZZ
	3402723-1	. LOCK ASSY (98897)	2	F	MDGZZ
17	3402244-41	. . LOCK (98897)	1		MDGZZ
		(ATTACHING PARTS)			
18	MS20615-4MP9	. . RIVET, SOLID	1		PAHZZ
		---*---			
19	3402244-55	. TURNBUCKLE ASSY (98897)	2		MDGZZ
	3402244-13	. BEAM ASSY (98897)	1		MDGZZ
20	3402244-39	. . BEAM (98897)	1		MDGZZ
	3402244-9	. . BRACKET ASSY (98897)	1		MDGZZ
21	3402244-15	. . . BRACKET (98897)	1		MDGZZ
22	3402244-21	. . . PIN (98897)	1		MDGZZ
23	3402244-29	. . . RETAINER (98897)	1		MDGZZ
		(ATTACHING PARTS)			
24	NAS1102-04-5	. . . SCREW, MACHINE	1		PAHZZ
		---*---			
25	AN310-4	. NUT, PLAIN, CASTELLATED	1		PAHZZ
26	MS20426AD5-5	. RIVET, SOLID	4		PAHZZ
27	HG228-1/4-4	. TURNBUCKLE (75535)	1		XBHZZ
28	3402244-23	. EYEBOLT (98897)	1		MDGZZ
		(ATTACHING PARTS)			
29	AN960-416L	. WASHER, FLAT	1		PAHZZ
	NAS1149F0432P	. WASHER, FLAT (ALT FOR AN960-416L)		*	PAHZZ
30	MS21042-4	. NUT, SELF-LOCKING, HEXAGON	1		PAHZZ
		---*---			
31	3402244-17	. BLOCK (98897)	1		MDGZZ
		(ATTACHING PARTS)			
32	NAS1102-4-24	. SCREW, MACHINE	1		PAHZZ
33	AN960-416L	. WASHER, FLAT	1		PAHZZ
	NAS1149F0432P	. WASHER, FLAT (ALT FOR AN960-416L)		*	PAHZZ
34	MS21042-4	. NUT, SELF-LOCKING, HEXAGON	1		PAHZZ
		---*---			
35	3402244-17	. BLOCK (98897)	1		MDGZZ

Figure 2. Flight Station Air Conditioning Unit Installation/Removal Fixture Assembly (3402244-1) (Sheet 2)

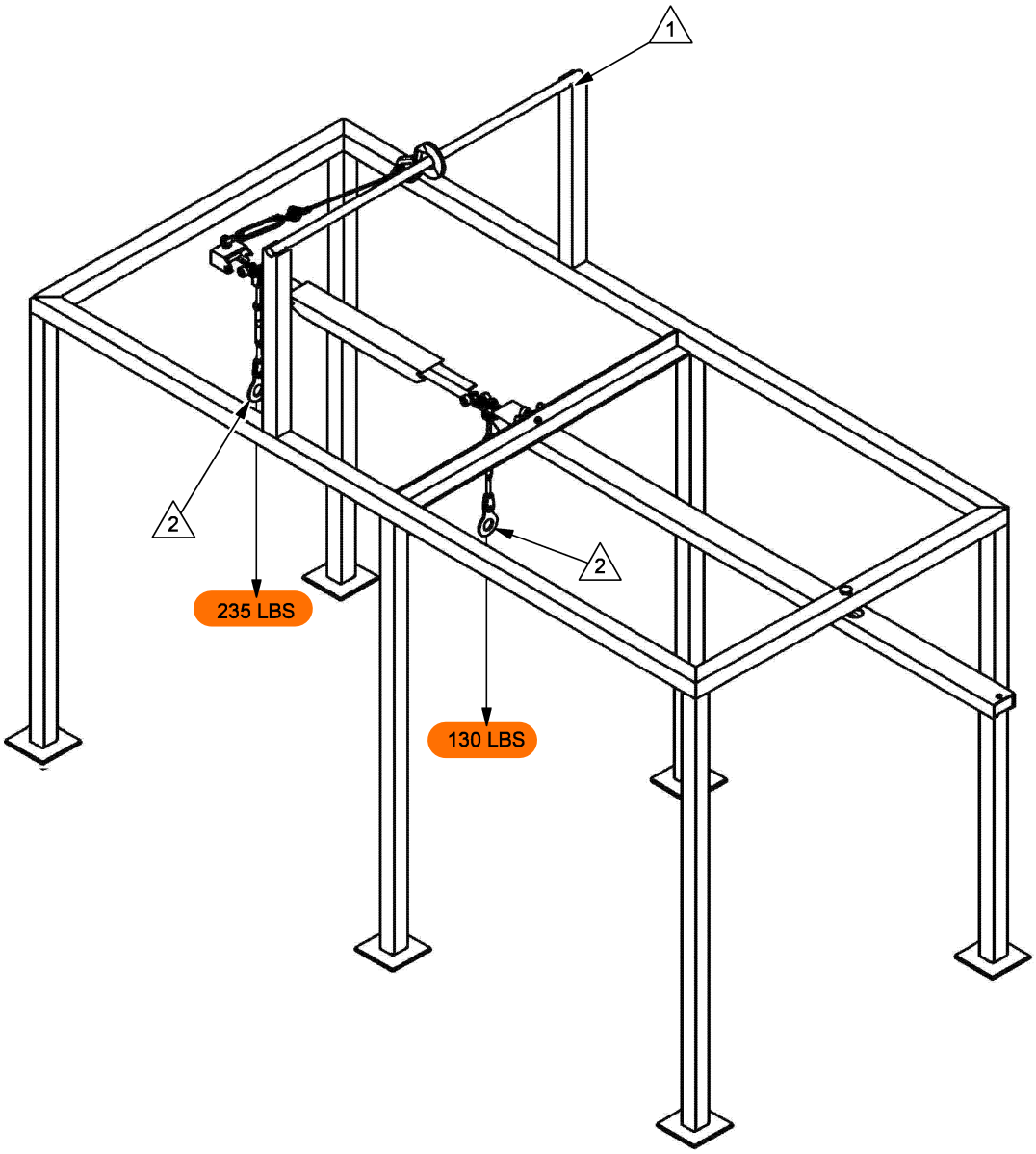

MATERIALS AND EQUIPMENT REQUIRED FOR PROOFLOAD TESTING

ITEM	QTY	DESCRIPTION	PART NUMBER	CAGE	SM&R
1	1	PROOFLOAD STAND	18D8178-1	96916	MDDZZ
2	1	PROOFLOAD ADAPTER	26C0252-1	96916	MDDZZ

Figure 3. Proofload Test of Flight Station Air Conditioning Unit Installation/Removal Fixture Assembly (3402244-1)

INTERMEDIATE AND DEPOT MAINTENANCE
HOIST ASSEMBLY - UNIVERSAL CARGO COMPARTMENT REFRIGERATION UNIT AND AUXILIARY POWER UNIT GENERATOR WITH ILLUSTRATED PARTS BREAKDOWN PART NUMBER 3402245-1

Reference Material

Title	Number
Depot Level Rework Program for Support Equipment End Items	NAVAIRINST 13680.1
Inspection and Proofload Testing of Lifting Slings for Aircraft and Related Components	NAVAIR 17-1-114.1

Alphabetical Index

Subject	Page No.
Assembly, Refinishing and Lubrication	2
Cleaning and Inspection	1
Disassembly	1
Illustrated Parts Breakdown (IPB)	2
Introduction	1
Notes	3
Proofload Test	2
Repair	2
Usable On Codes	3

Record of Applicable Technical Directives

None

1. INTRODUCTION.

a. Refer to figure 1 for application information.

PART NUMBER (CAGE):	3402245-1 (98897)	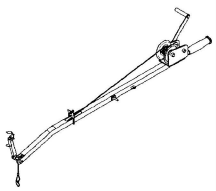
NOMEN-CLATURE:	HOIST ASSEMBLY - UNIVERSAL CARGO COMPARTMENT REFRIGERATION UNIT AND AUXILIARY POWER UNIT GENERATOR	
NSN:	1730-01-006-0931	
SAFE WORKING LOAD:	200 LB	
APPLIC-ATION:	C/KC-130T/J	

Figure 1. Application Information

2. DISASSEMBLY.

a. The universal cargo compartment refrigeration unit and auxiliary power unit generator hoist assembly, P/N 3402245-1 (98897), shall be disassembled in accordance with figure 2. General disassembly of hoist components shall be accomplished in accordance with good shop practices.

3. CLEANING AND INSPECTION.

a. Clean hoist as necessary in accordance with NAVAIR 17-1-114.1, Work Package (WP) 005 00 to remove dirt, oil, grease and other foreign matter.

b. Perform a detailed inspection of the entire hoist assembly in accordance with NAVAIR 17-1-114.1, WP 005 00. Cracks are not acceptable. Leave paint intact and mark any suspect damaged areas. Remove paint from suspect areas and stress areas for Non-Destructive Inspection (NDI).

4. REPAIR.

a. Removal and replacement of hardware and readily available parts is permitted in accordance with applicable SM&R codes in figure 2. There is no repair for pins, washers and other common hardware. Damaged hardware shall be rejected and replaced with new hardware. All hardware shall be inspected prior to assembly. Refer to NAVAIR 17-1-114.1, WP 005 00.

b. In general, surface defects on the hoist's structural members, attachments, and fittings such as cracks, nicks and gouges, may be repaired by hand filing and blending with the surrounding area to remove the defect as long as 90 percent or more of the component cross sectional dimension/area is intact. Refer to NAVAIR 17-1-114.1, WP 005 00.

5. ASSEMBLY, REFINISHING AND LUBRICATION.

MATERIALS REQUIRED

Nomenclature	Specification/ Part Number	HMWS Index No.
Epoxy Primer	MIL-PRF-23377	1
Polyurethane Coating	MIL-PRF-85285	2

a. The universal cargo compartment refrigeration unit and auxiliary power unit generator hoist assembly shall be assembled in accordance with figure 2. General assembly of hoist components shall be accomplished in accordance with good shop practices.

Epoxy Primer, MIL-PRF-23377 1

b. Prime the universal cargo compartment refrigeration unit and auxiliary power unit generator hoist assembly where primer was removed for inspection or corrosion control purposes using epoxy primer, MIL-PRF-23377, corrosion inhibiting, lead and chromate free, Type II. There is no allowance for primer in holes or threaded areas.

Polyurethane Coating, MIL-PRF-85285 2

c. Paint the universal cargo compartment refrigeration unit and auxiliary power unit generator hoist assembly where paint was removed for inspection or corrosion control purposes using polyurethane coating, MIL-PRF-85285, untinted white (SAE-AMS-STD-595, 17925) or for USMC applications use green (SAE-AMS-STD-595, 24052, 34052 or 34084). There is no allowance for paint in holes or threaded areas.

6. PROOFLOAD TEST.

MATERIALS REQUIRED

Nomenclature	Specification/ Part Number	HMWS Index No.
Proofload Tag	—	—
Swaging Sleeve	MS51844-82	—
Wire Rope	M83420/2-002	—

SUPPORT EQUIPMENT REQUIRED

Nomenclature	Part Number
Proofload Stand	18E8159-1

a. Due to non-availability of proofload adapters, the proofload task for this sling is to be performed at a sling depot via NAVAIRINST 13680.1 procedures.

b. Perform proofload test of the universal cargo compartment refrigeration unit and auxiliary power unit generator hoist assembly at assigned depot by mounting it to the proofload stand and hang weight as shown in figure 3.

c. Locally manufacture proofload tag in accordance with NAVAIR 17-1-114.1, WP 005 00. Attach proofload tag to the hoist beam assembly (1, figure 2) using six inches of wire rope (M83420/2-002) and one swaging sleeve (MS51844-82).

7. ILLUSTRATED PARTS BREAKDOWN (IPB).

a. Refer to figure 2. Refer to NAVAIR 17-1-114.1, WP 002 00 for instructions on how to use this IPB.

8. NOTES.

a. The universal cargo compartment refrigeration unit and auxiliary power unit generator hoist assembly is used to lift the cargo compartment refrigeration unit and auxiliary power unit generator.

9. USABLE ON CODES.

a. The usable on codes for the universal cargo compartment refrigeration unit and auxiliary power unit generator hoist assembly are as follows:

Usable On Code	Units
A	1 thru 20
B	21 thru 28
C	29 and up
D	1 thru 30
E	31 and up

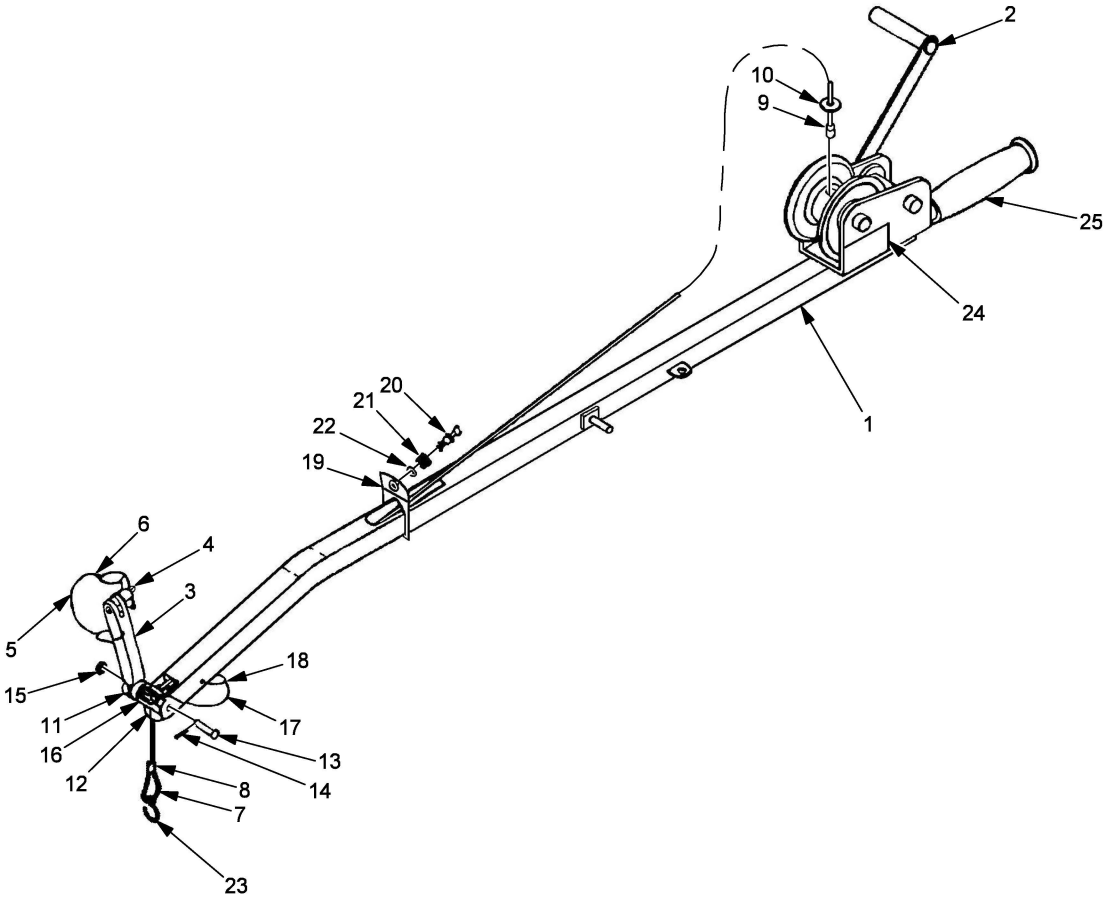

Figure 2. Universal Cargo Compartment Refrigeration Unit and
Auxiliary Power Unit Generator Hoist Assembly (3402245-1) (Sheet 1 of 2)

INDEX NO.	PART NUMBER	DESCRIPTION 1 2 3 4 5 6 7	UNITS PER ASSY	USABLE ON CODE	SM&R CODE
	3402245-1	HOIST ASSEMBLY, UNIVERSAL CARGO COMPARTMENT REFRIGERATION UNIT AND AUXILIARY POWER UNIT GENERATOR (98897)	REF		PEOHH
1	3402245-3	. HOIST BEAM ASSY (98897)	1		MDGZZ
2	NO. 1000	. . TRAILER WINCH (16853)	1	A	XBHZZ
	NO. 5404	. . TRAILER WINCH	1	B	XBHZZ
	NO. 5414	. . TRAILER WINCH	1	C	XBHZZ
	3402245-5	. EXTENSION BAR ASSY (98897)	1		AGGZZ
3	3402245-11	. . EXTENSION BAR (98897)	1		MDGZZ
4	CL-6-BLP-T-.8S	. . BALL LOCK PIN (99862)	1		PFHZZ
	MS17985C608	. . PIN, QUICK RELEASE (80205) (ALT FOR CL-6-BLP-T-.8S)		*	PBHZZ
	MS17984C608	. . PIN, QUICK RELEASE (ALT FOR MS17985C608) (ATTACHING PARTS)		*	PAHZZ
5	3402245-13	. . CABLE (98897)	1		MDGZZ
	M83420/2-004	. . WIRE ROPE 0.09 DIA x 12.00 (ALT FOR 3402245-13)		*	PAHZZ
6	28-2G	. . SLEEVE, SWAGING (76691) ---*---	2		PAHZZ
	3402245-7	. CABLE ASSY (98897)	1		MDGZZ
7	3402245-15	. . CABLE (98897)	1		MDGZZ
	M83420/2-008	. . WIRE ROPE 0.18 X 150.0 (ALT FOR 3402245-15)		*	PAHZZ
8	28-6X	. . SLEEVE, SWAGING (76691)	1		PAHZZ
9	MS20664C6	. WIRE ROPE, BALL END	1		PAHZZ
10	3402245-33	. WASHER (98897)	1		MGGZZ
11	3402245-9	. STRUT (98897)	1		MDGZZ
12	MS20220A1	. PULLEY, GROOVE (ATTACHING PARTS)	1		PAHZZ
13	MS20392-4C-43	. PIN, STRAIGHT, HEADED	1		PAHZZ
14	MS24665-153	. PIN, COTTER	1		PAHZZ
15	AN960C516	. WASHER, FLAT	1		PAHZZ
	NAS1149C0563R	. WASHER, FLAT (ALT FOR AN960C516) ---*---		*	PAHZZ
16	CL-6-BLP-T-1.0-S	. BALL LOK PIN (99862) (ATTACHING PARTS)	1		PAHZZ
17	3402245-13	. CABLE (98897)	1		MDGZZ
	M83420/2-004	. WIRE ROPE 0.09 DIA x 12.00 (ALT FOR 3402245-13)		*	PAHZZ
18	28-2G	. SLEEVE, SWAGING (76691) ---*---	2		PAHZZ
	3402245-35	. SUPPORT ASSY (98897)	1		AGGZZ
19	3402245-37	. PLATE (98897)	1		MDGZZ
20	4002-8W	. . STUD (71286)	1		PAHZZ
21	4002-0	. . EYELET (71286)	1		PAHZZ
22	R4G	. . RING, RETAINING (71286)	1		PAHZZ
23	V8470-2	. S-HOOK (14557)	1	D	XBHZZ
	3402245-39	. S-HOOK (98897)	1	E	MDGZZ
24	LS35265E1C2	. IDENT PLATE (98897)	1		MDGZZ
25	NO. 6122	. GRIP, HANDLE (77969)	1		XBHZZ
	6122, 1INIDX5.25L	. GRIP, HANDLE (77969) (ALT FOR NO. 6122)		*	PAHZZ

Figure 2. Universal Cargo Compartment Refrigeration Unit and Auxiliary Power Unit Generator Hoist Assembly (3402245-1) (Sheet 2)

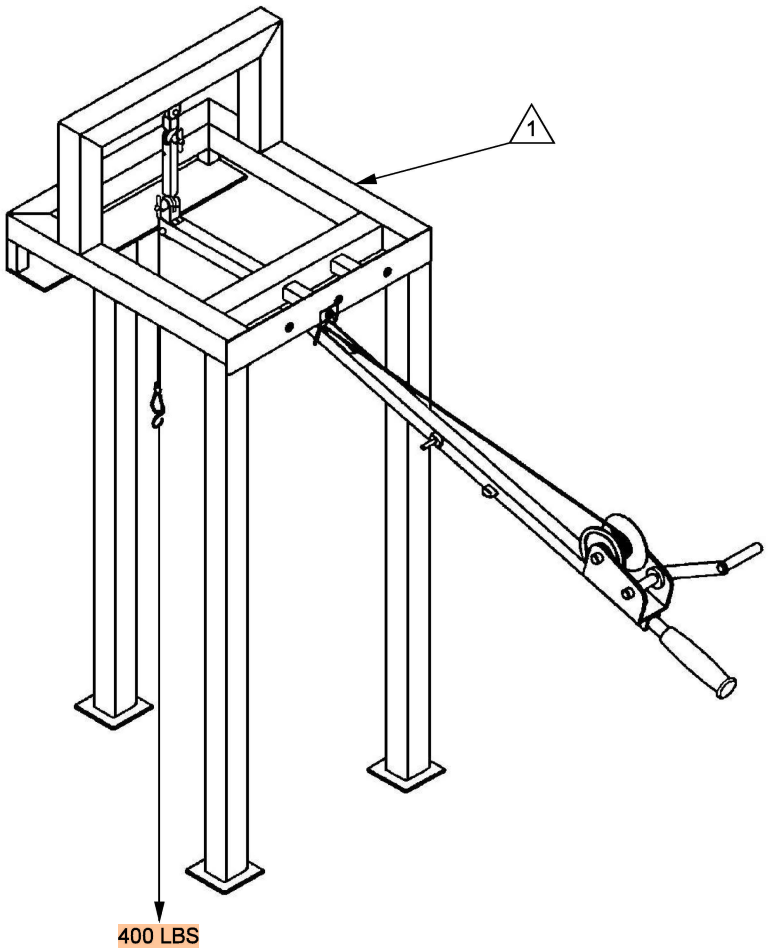

MATERIALS AND EQUIPMENT REQUIRED FOR PROOFLOAD TESTING

ITEM	QTY	DESCRIPTION	PART NUMBER	CAGE	SM&R
1	1	PROOFLOAD STAND	18E8159-1	96916	MDDZZ

Figure 3. Proofload Test of Universal Cargo Compartment Refrigeration Unit and Auxiliary Power Unit Generator Hoist Assembly (3402245-1)

INTERMEDIATE AND DEPOT MAINTENANCE
HOIST ASSEMBLY - AUXILIARY POWER UNIT INSTALLATION
WITH ILLUSTRATED PARTS BREAKDOWN
PART NUMBER 3402246-1

Reference Material

Title	Number
Depot Level Rework Program for Support Equipment End Items	NAVAIRINST 13680.1
Inspection and Proofload Testing of Lifting Slings for Aircraft and Related Components	NAVAIR 17-1-114.1

Alphabetical Index

Subject	Page No.
Assembly, Refinishing and Lubrication	2
Cleaning and Inspection	1
Disassembly	1
Illustrated Parts Breakdown (IPB)	2
Introduction	1
Notes	3
Proofload Test	2
Repair	2
Usable On Codes	3

Record of Applicable Technical Directives

None

1. INTRODUCTION.

a. The auxiliary power unit installation hoist assembly is used to lift the auxiliary power unit. Refer to figure 1 for application information.

PART NUMBER (CAGE):	3402246-1 (98897)	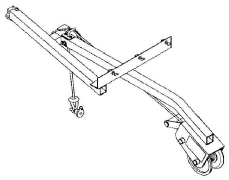
NOMEN-CLATURE:	HOIST ASSEMBLY, AUXILIARY POWER UNIT INSTALLATION	
NSN:	1730-01-006-0932	
SAFE WORKING LOAD:	400 LB	
APPLICATION:	C/KC-130T/J	

Figure 1. Application Information

2. DISASSEMBLY.

a. The auxiliary power unit installation hoist assembly, P/N 3402246-1 (98897), shall be disassembled in accordance with figure 2. General disassembly of hoist components shall be accomplished in accordance with good shop practices.

3. CLEANING AND INSPECTION.

a. Clean hoist as necessary in accordance with NAVAIR 17-1-114.1, Work Package (WP) 005 00 to remove dirt, oil, grease and other foreign matter.

b. Perform a detailed inspection of the entire hoist assembly in accordance with NAVAIR 17-1-114.1, WP 005 00. Cracks are not acceptable. Leave paint intact and mark any suspect damaged areas. Remove paint from suspect areas and stress areas for Non-Destructive Inspection (NDI).

4. REPAIR.

a. Removal and replacement of hardware and readily available parts is permitted in accordance with applicable SM&R codes in figure 2. There is no repair for pins, washers and other common hardware. Damaged hardware shall be rejected and replaced with new hardware. All hardware shall be inspected prior to assembly. Refer to NAVAIR 17-1-114.1, WP 005 00.

b. In general, surface defects on the hoist's structural members, attachments, and fittings such as cracks, nicks, and gouges, may be repaired by hand filing and blending with the surrounding area to remove the defect as long as 90 percent or more of the component cross sectional dimension/area is intact. Refer to NAVAIR 17-1-114.1, WP 005 00.

5. ASSEMBLY, REFINISHING AND LUBRICATION.

MATERIALS REQUIRED

Nomenclature	Specification/ Part Number	HMWS Index No.
Primer, Epoxy	MIL-PRF-23377	1
Coating, Polyurethane	MIL-PRF-85285	2

a. The auxiliary power unit installation hoist assembly shall be assembled in accordance with figure 2. General assembly of hoist components shall be accomplished in accordance with good shop practices.

Epoxy Primer, MIL-PRF-23377 1

b. Prime the auxiliary power unit installation hoist assembly where primer was removed for inspection or corrosion control purposes using epoxy primer, MIL-PRF-23377, corrosion inhibiting, lead and chromate free, Type II. There is no allowance for primer in holes or threaded areas.

Polyurethane Coating, MIL-PRF-85285 2

c. Paint the auxiliary power unit installation hoist assembly where paint was removed for inspection or corrosion control purposes using polyurethane coating, MIL-PRF-85285, untinted white (SAE-AMS-STD-595, 17925) or for USMC applications use green (SAE-AMS-STD-595, 24052, 34052 or 34084). There is no allowance for paint in holes or threaded areas.

6. PROOFLOAD TEST.

MATERIALS REQUIRED

Nomenclature	Specification/ Part Number	HMWS Index No.
Proofload Tag	—	—
Swaging Sleeve	MS51844-82	—
Wire Rope	M83420/2-002	—

SUPPORT EQUIPMENT REQUIRED

Nomenclature	Part Number
Proofload Stand	18E8159-1

a. Due to non-availability of proofload adapters, the proofload task for this sling is to be performed at a sling depot via NAVAIRINST 13680.1 procedures.

b. Perform proofload test of the auxiliary power unit hoist assembly at assigned depot, by mounting it to the proofload stand and hang weight as shown in figure 3. The winch must be operated through a minimum of 1 foot of travel.

c. Locally manufacture proofload tag in accordance with 17-1-114.1, WP 005 00. Attach proofload tag to the frame assembly (1, figure 2) using six inches of wire rope (M83420/2-002) and one swaging sleeve (MS51844-82).

7. ILLUSTRATED PARTS BREAKDOWN (IPB).

a. Refer to figure 2. Refer to NAVAIR 17-1-114.1, WP 002 00 for instructions on how to use this IPB.

8. NOTES.

MATERIALS REQUIRED

Nomenclature	Specification/ Part Number	HMWS Index No.
Rubber	M6855/2	—

a. See figure 4 for manufacturing details for Pad (3402246-15).

9. USABLE ON CODES.

a. The usable on codes for the auxiliary power unit installation hoist assembly are as follows:

Usable On Code	Units
A	1 thru 5
B	6 thru 52
C	29 thru 52
D	1 thru 23
E	24 thru 28
F	6 thru 28
G	53 and up
H	1 thru 67
I	68 and up
J	1 thru 28
K	29 and up

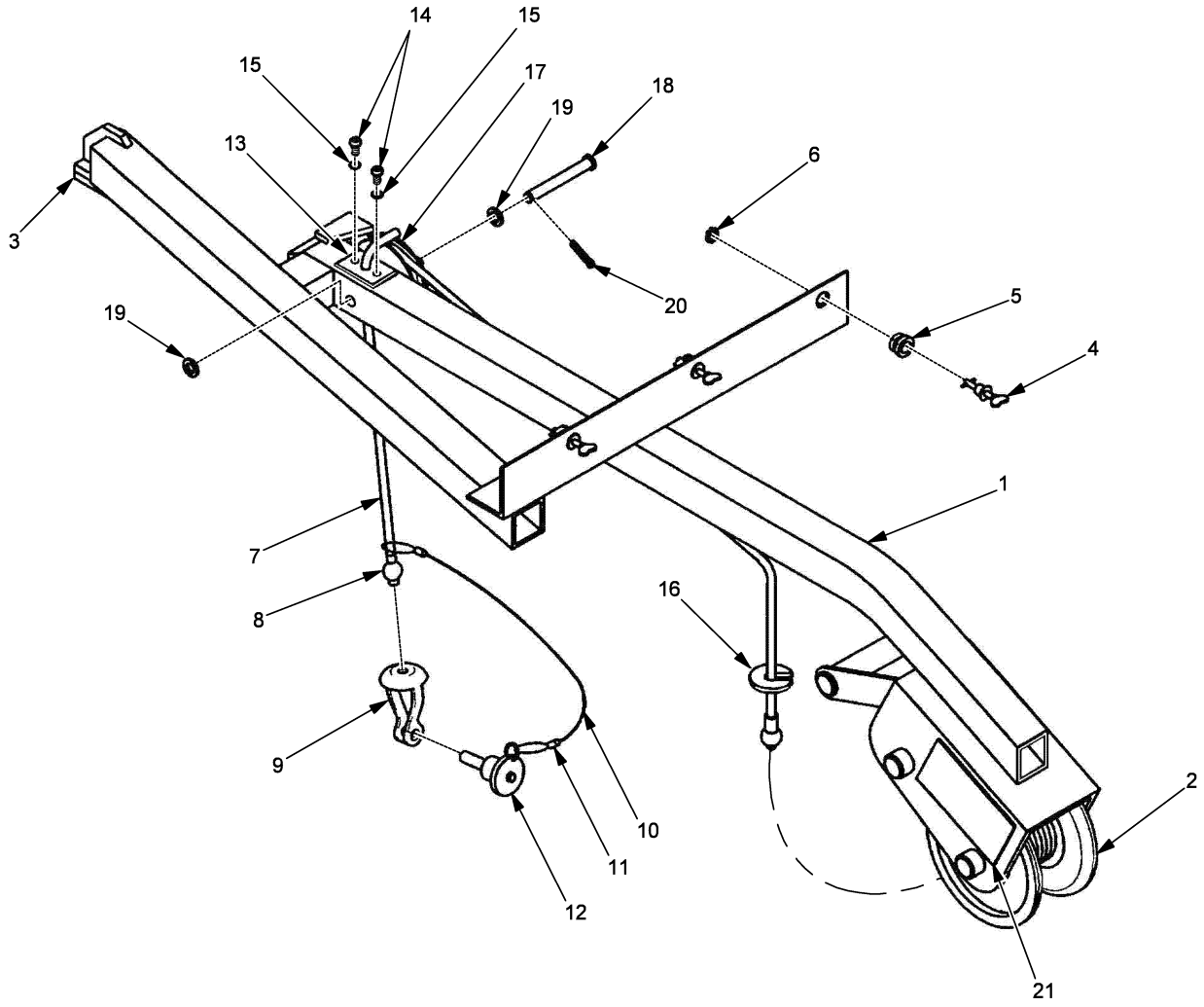

Figure 2. Auxiliary Power Unit Installation Hoist Assembly (3402246-1) (Sheet 1 of 2)

INDEX NO.	PART NUMBER	DESCRIPTION 1 2 3 4 5 6 7	UNITS PER ASSY	USABLE ON CODE	SM&R CODE
	3402246-1	HOIST ASSEMBLY, AUXILIARY POWER UNIT ..... INSTALLATION (98897)	REF		PEOHH
1	3402246-3	. FRAME ASSY (98897)	1		MDGZZ
2	NO. 1400	. . TRAILER WINCH (16853)	1	D	XBHZZ
	MODEL 5407	. . WINCH	1	E	XBHZZ
	MODEL 5417	. . WINCH	1	C	XBHZZ
	DL1400	. . WINCH, DRUM, HAND OPERATED (72031)	1	G	XBHZZ
3	3402246-15	. . PAD (98897)	1	H	MGGZZ
4	4002-8W	. STUD ASSY, TURNLOCK ..... FASTENER (71286)	3		PAHZZ
5	4002-0	. EYELET, TURNLOCK FASTENER (71286) ..... (ATTACHING PARTS)	3		PAHZZ
6	R4G	. RING, RETAINING (71286) ..... ---*---	1		PAHZZ
	3402246-23	. CABLE ASSY (98897)	1	A	MDGZZ
	3402246-39	. CABLE ASSY (98897)	1	F	MDGZZ
	3402246-41	. CABLE ASSY (98897)	1	C	MDGZZ
	3402246-45	. CABLE ASSY (98897)	1	G	MDGZZ
7	3402246-25	. . CABLE 0.18 X 360.00 (98897)	1	J	MDGZZ
	3402246-43	. . CABLE 0.18 X 150.00 (98897)	1	K	MDGZZ
	M83420/2-008	. . WIRE ROPE (ALT FOR 3402246-43)		*	PAHZZ
8	MS20664C6	. . BALL END, WIRE ROPE	2		PAHZZ
9	NAS1435-K6	. . TERMINAL, WIRE ROPE, SWAGING	1		PAHZZ
	3402246-17	. . CABLE ASSY (98897)	1		XBHZZ
10	3402246-19	. . . CABLE (98897)	1		XBHZZ
	M83420/2-004	. . . WIRE ROPE 0.09 X 12.0 (ALT FOR ..... 3402246-19)		*	PAHZZ
11	28-2G	. . . SLEEVE, SWAGING (76691)	2		PAHZZ
12	NAS1335S3S05	. . . PIN, QUICK RELEASE	1		XBHZZ
	MS17984C505	. . . PIN, QUICK RELEASE (ALT FOR ..... NAS1335S3S05)		*	PAHZZ
13	3402246-27	. GUARD ASSY (98897) ..... (ATTACHING PARTS)	1		MDGZZ
14	NAS602-6P	. SCREW, MACHINE	2		PAHZZ
15	MS35335-38	. WASHER, LOCK ..... ---*---	2		PAHZZ
16	3402246-35	. WASHER (98897)	1	A	MDGZZ
	3402246-37	. WASHER (98897)	1	B	MDGZZ
17	MS20221A-1	. PULLEY, GROOVE ..... (ATTACHING PARTS)	1		PAHZZ
18	MS20392-4C65	. PIN, STRAIGHT, HEADED	1	H	PAHZZ
	MS20392-4C74	. PIN, STRAIGHT, HEADED	1	I	XBHZZ
	MS20392-4C75	. PIN, STRAIGHT, HEADED (ALT FOR ..... MS20392-4C74)		*	PAHZZ
19	AN960-516	. WASHER, FLAT	2		PAHZZ
	NAS1149F0532P	. WASHER, FLAT (ALT FOR AN960-516)		*	PAHZZ
20	MS24665-283	. PIN, COTTER ..... ---*---	1		PAHZZ
21	LS35130D3C2	. IDENT PLATE (98897)	1		MDGZZ

Figure 2. Auxiliary Power Unit Installation Hoist Assembly (3402246-1) (Sheet 2)

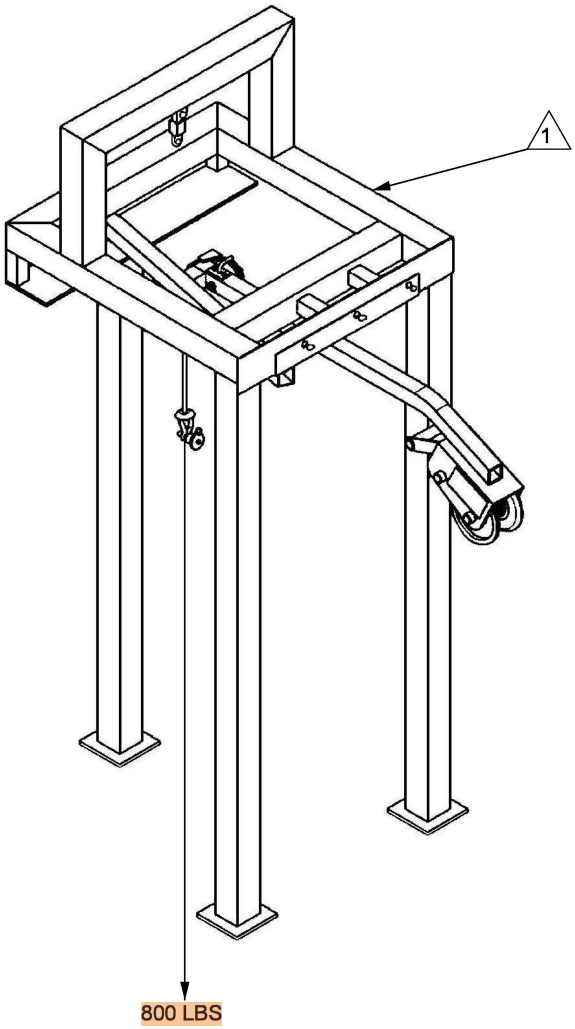

MATERIALS AND EQUIPMENT REQUIRED FOR PROOFLOAD TESTING

ITEM	QTY	DESCRIPTION	PART NUMBER	CAGE	SM&R
1	1	PROOFLOAD STAND	18E8159-1	96916	MDDZZ

Figure 3. Proofload Test of Auxiliary Power Unit Installation Hoist Assembly (3402246-1)

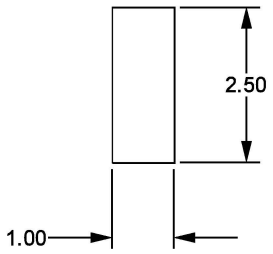

NOTES

1. MATERIAL - RUBBER SHEET, P/N M6855/2, CLASS II, GRADE 60, 0.18 IN. THICK.
2. ALL DIMENSIONS ARE IN INCHES AND TOLERANCES ARE ± 0.02 FOR 0.XX, UNLESS OTHERWISE SPECIFIED.

Figure 4. Manufacture of Pad (3402246-15)

INTERMEDIATE AND DEPOT MAINTENANCE
SLING FITTING ASSEMBLY - REAR MOUNT
WITH ILLUSTRATED PARTS BREAKDOWN
PART NUMBER 3404003-1

Reference Material

Title	Number
Depot Level Rework Program for Support Equipment End Items	NAVAIRINST 13680.1
Inspection and Proofload Testing of Lifting Slings for Aircraft and Related Components	NAVAIR 17-1-114.1

Alphabetical Index

Subject	Page No.
Assembly, Refinishing and Lubrication	2
Cleaning and Inspection	1
Disassembly	1
Illustrated Parts Breakdown (IPB)	2
Introduction	1
Notes	2
Proofload Test	2
Repair	2

Record of Applicable Technical Directives

None

1. INTRODUCTION.

a. Refer to figure 1 for application information.

PART NUMBER (CAGE):	3404003-1 (98897)	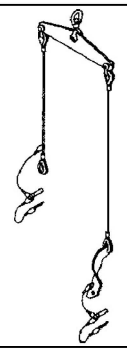
NOMENCLATURE:	SLING FITTING ASSEMBLY, REAR MOUNT	
NSN:	1730-01-454-4216	
SAFE WORKING LOAD:	1750 LB	
APPLICATION:	C/KC-130J	

Figure 1. Application Information

2. DISASSEMBLY.

a. The rear mount sling fitting assembly, P/N 3404003-1 (98897), shall be disassembled in accordance with figure 2. General disassembly of sling components shall be accomplished in accordance with good shop practices.

3. CLEANING AND INSPECTION.

a. Clean sling as necessary in accordance with NAVAIR 17-1-114.1, Work Package (WP) 005 00 to remove dirt, oil, grease and other foreign matter.

b. Perform a detailed inspection of the entire sling in accordance with NAVAIR 17-1-114.1, WP 005 00. Cracks are not acceptable. Leave paint intact and mark any suspect damaged areas. Remove paint from suspect and high stress areas for Non-Destructive Inspection (NDI).

4. REPAIR.

a. Removal and replacement of hardware and readily available parts is permitted in accordance with applicable SM&R codes in figure 2. There is no repair for screws and other common hardware. Damaged hardware shall be rejected and replaced with new hardware. All hardware shall be inspected prior to assembly. Refer to NAVAIR 17-1-114.1, WP 005 00.

b. In general, surface defects on the sling's structural members, attachments, and fittings such as cracks, nicks and gouges, may be repaired by hand filing and blending with the surrounding area to remove the defect as long as 90 percent or more of the component cross sectional dimension/area is intact. Refer to NAVAIR 17-1-114.1, WP 005 00.

5. ASSEMBLY, REFINISHING AND LUBRICATION.

MATERIALS REQUIRED

Nomenclature	Specification/ Part Number	HMWS Index No.
Epoxy Primer	MIL-PRF-23377	1
Polyurethane Coating	MIL-PRF-85285	2

a. The rear mount sling fitting assembly shall be assembled in accordance with figure 2. General assembly of sling components shall be accomplished in accordance with good shop practices.

Epoxy Primer, MIL-PRF-23377 1

b. Prime spreader bar (1) and fitting (12) where primer was removed for inspection or corrosion control purposes using epoxy primer, MIL-PRF-23377, corrosion inhibiting, lead and chromate free, Type II. There is no allowance for primer in holes or threaded areas.

Polyurethane Coating, MIL-PRF-85285 2

c. Paint the spreader bar (1) and fitting (12) where paint was removed for inspection or corrosion control purposes using polyurethane coating, MIL-PRF-85285, untinted white (SAE-AMS-STD-595, 17925) or for USMC applications use green (SAE-AMS-STD-595, 24052, 34052, or 34084). There is no allowance for paint in holes or threaded areas.

6. PROOFLOAD TEST.

MATERIALS REQUIRED

Nomenclature	Specification/ Part Number	HMWS Index No.
Proofload Tag	—	—
Swaging Sleeve	MS51844-82	—
Wire Rope	M83420/2-002	—

SUPPORT EQUIPMENT REQUIRED

Nomenclature	Part Number
Proofload Adapter	26D0358-1
Proofload Adapter	26D0358-2

a. Due to non-availability of proofload adapters, the proofload task for this sling is to be performed at a sling depot via NAVAIRINST 13680.1 procedures.

b. Perform proofload test of sling at assigned depot by restraining at point A and apply load as shown in figure 3.

c. Locally manufacture proofload tag in accordance with NAVAIR 17-1-114.1, WP 005 00. Attach proofload tag to the link and jaw swivel (2, figure 2) using six inches of wire rope (M83420/2-002) and one swaging sleeve (MS51844-82).

7. ILLUSTRATED PARTS BREAKDOWN (IPB).

a. Refer to figure 2. Refer to NAVAIR 17-1-114.1, WP 002 00 for instructions on how to use this IPB.

8. NOTES.

a. The rear mount sling fitting assembly is used to support the engine turbine assembly during installation and/or removal of the rear engine mount without having to remove the engine from the aircraft.

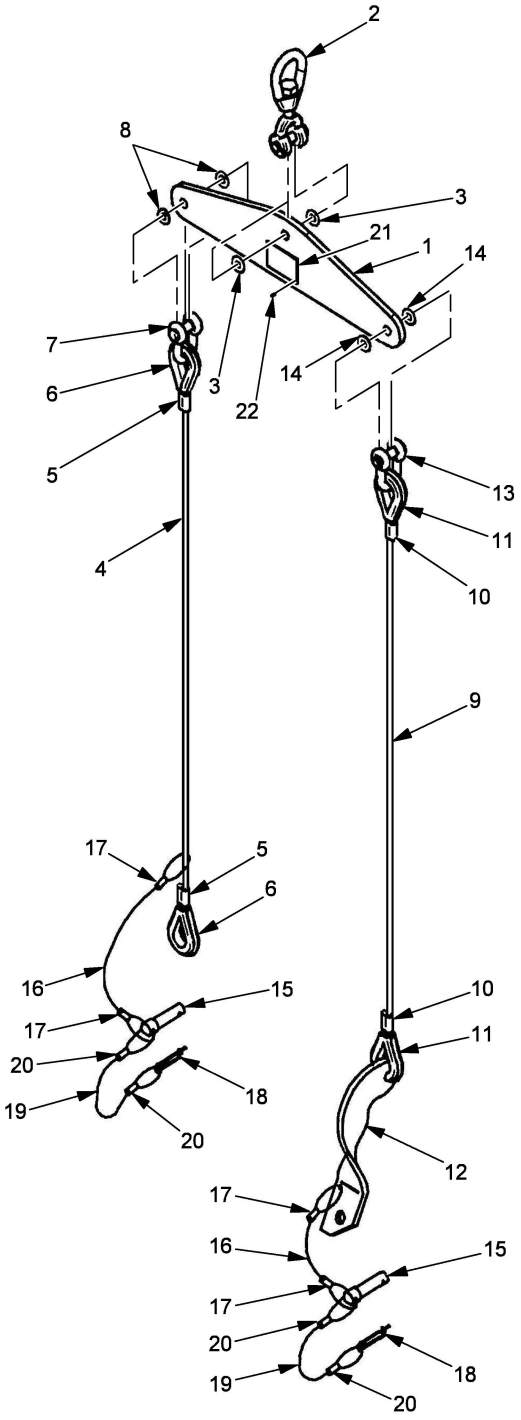

Figure 2. Rear Mount Sling Fitting Assembly (3404003-1) (Sheet 1 of 2)

INDEX NO.	PART NUMBER	DESCRIPTION 1 2 3 4 5 6 7	UNITS PER ASSY	USABLE ON CODE	SM&R CODE
	3404003-1	SLING FITTING ASSEMBLY, REAR	REF		PEOHH
		MOUNT (98897)			
1	3404003-3	. SPREADER BAR, FITTING ASSY (98897)	1		XDHZZ
2	G403-1-2	. SWIVEL, LINK AND JAW (75535)	1		PAHZZ
3	NAS43HT8-8	. SPACER	2		PAHZZ
	3404003-9	. CABLE ASSY, SLING (98897)	1		AGGZZ
4	M83420/2-010	. . WIRE ROPE 0.25 DIA X 36.0	1		PAHZZ
5	MS51844-88	. . SWAGING, SLEEVE	2		PAHZZ
6	AN100-8	. . THIMBLE, ROPE	2		PAHZZ
		(ATTACHING PARTS)			
7	G-215-3/8 IN	. SHACKLE (75535)	1		PAHZZ
8	NAS43HT7-7	. SPACER	2		XBHZZ
	NAS43HT7-6	. SPACER (ALT FOR NAS43HT7-7)		*	PAHZZ
		---*---			
	3404003-7	. CABLE ASSY, SLING (98897)	1		AGGZZ
9	M83420/2-010	. . WIRE ROPE 0.25 DIA X 36.0	1		PAHZZ
10	MS51844-88	. . SWAGING, SLEEVE	2		PAHZZ
11	AN100-8	. . THIMBLE, ROPE	2		PAHZZ
12	3404003-5	. . FITTING (98897)	1		XDHZZ
		(ATTACHING PARTS)			
13	G-215-3/8 IN	. SHACKLE (75535)	1		PAHZZ
14	NAS43HT7-7	. SPACER	2		XBHZZ
	NAS43HT7-6	. SPACER (ALT FOR NAS43HT7-7)		*	PAHZZ
		---*---			
15	3404003-11	. PIN, CLEVIS (98897)	2		XDHZZ
		(ATTACHING PARTS)			
16	CL-3-C-12.0	. CABLE (99862)	1		PAHZZ
17	CL-5-F	. FERRULE, WIRE ROPE (99862)	2		PAHZZ
		---*---			
18	3404003-13	. PIN, SAFETY (98897)	2		XDHZZ
	90174A115	. PIN, RETAINING (39428) (ALT FOR 3404003-13)		*	PAHZZ
		(ATTACHING PARTS)			
19	CL-3-C-12.0	. CABLE (99862)	1		PAHZZ
20	CL-5-F	. FERRULE, WIRE ROPE (99862)	2		PAHZZ
		---*---			
21	LS3534-3G1B1	. LABEL (98897)	1		XDHZZ
		(ATTACHING PARTS)			
22	MS21318-15	. SCREW, DRIVE	4		PAHZZ
		---*---			

Figure 2. Rear Mount Sling Fitting Assembly (3404003-1) (Sheet 2)

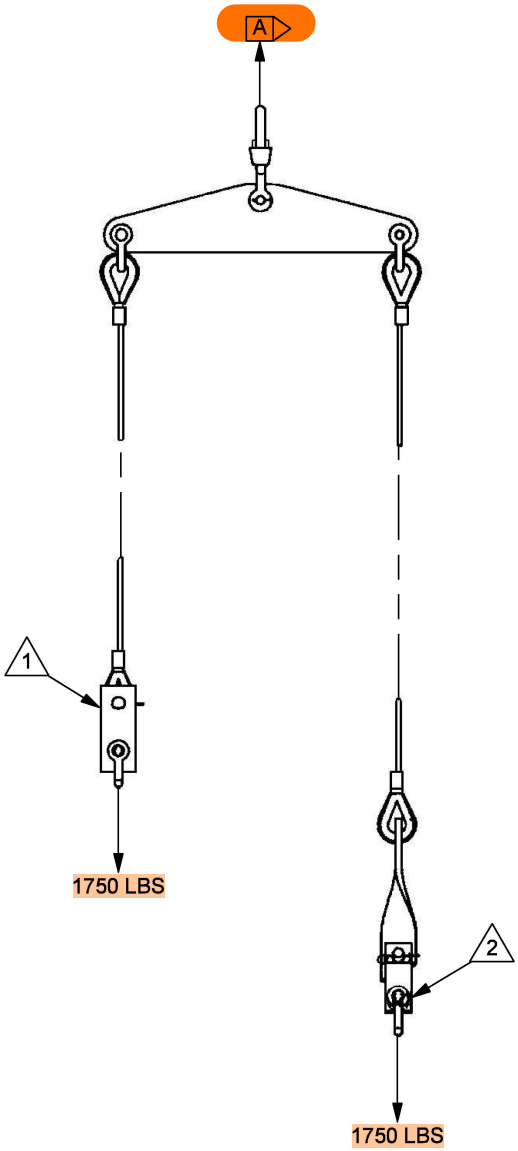

MATERIALS AND EQUIPMENT REQUIRED FOR PROOFLOAD TESTING

ITEM	QTY	DESCRIPTION	PART NUMBER	CAGE	SM&R
1	1	PROOFLOAD ADAPTER	26D0358-1	96916	MDDZZ
2	1	PROOFLOAD ADAPTER	26D0358-2	96916	MDDZZ

Figure 3. Proofload Test of Rear Mount Sling Fitting Assembly (3404003-1)