ATKINS
BLACK & VEATCH
FSB JOINT VENTURE

ADDENDUM NO. 3

Date: November 5, 2025

To: ALL BIDDERS OF RECORD

From: Frankfurt-Short-Bruza Associates, P.C. (FSB)
5801 N. Broadway Ext., Suite 500
Oklahoma City, OK 73118

Subject: **PN AQRC 189015 - NJ ANG F-16 MTC (FLIGHT SIMULATOR FACILITY), Atlantic City ANGB, New Jersey**

FSB Project No.: FSB2022-130-00

NOTE: This Addendum forms a part of the Contract Documents and modifies the Original Documents dated May 15, 2025. Acknowledge receipt of this Addendum in the space provided on the Bid Form. Failure to do so may subject the Bidder to disqualification.

****

ATTACHMENTS

Items in this addendum take precedence over the original bid documents. Items not specifically revised remain in effect. This addendum consists of (4) pages and the following attachments:

Specifications:

00 22 13.00 20 – SUPPLEMENTARY INSTRUCTIONS TO OFFERORS	November 5, 2025
32 92 19 – SEEDING	November 5, 2025

Drawings:

G-001 – COVER SHEET	November 5, 2025
CS101 – CIVIL – SITE LAYOUT PLAN (BASE BID)	November 5, 2025
CS102 – CIVIL – SITE LAYOUT PLAN (OPTIONAL LINE ITEMS – OLIS)	November 5, 2025
CU101 – CIVIL – UTILITY LAYOUT PLAN (BASE BID)	November 5, 2025
CU102 – CIVIL – UTILITY LAYOUT PLAN (OPTIONAL LINE ITEMS – OLIS)	November 5, 2025
C-504 – CIVIL – SITE DETAILS – SHEET 1	November 5, 2025
SB502 – FOUNDATION DETAILS	November 5, 2025
AE101 – FLOOR PLANS	November 5, 2025
AE102 – MECHANICAL YARD SCREEN WALL PLAN AND DETAILS	November 5, 2025
AE501 – SECTION DETAILS	November 5, 2025
IF101 – FURNITURE AND EQUIPMENT PLAN	November 5, 2025
FX401 – FIRE PROTECTION ENLARGED PLANS AND SECTIONS	November 5, 2025
EL101 – ELECTRICAL INTERIOR LIGHTING	November 5, 2025

5801 Broadway Extension, Suite 500
Oklahoma City, OK 73118-7436
405.840.2931 | fsb-ae.com

EP101 – GROUND FLOOR ELECTRICAL POWER PLAN	November 5, 2025
EP102 – GROUND FLOOR MECHANICAL POWER PLAN	November 5, 2025
EP600 – ONE-LINE DIAGRAMS	November 5, 2025
EP700 – PANEL SCHEDULES	November 5, 2025
EP703 – PANEL SCHEDULES	November 5, 2025
EY101 – TELECOMMUNICATIONS SPECIAL SYSTEMS GROUND FLOOR PLAN	November 5, 2025

MODIFICATIONS TO THE CONDITIONS OF THE CONTRACT

N/A.

MODIFICATIONS TO THE SPECIFICATIONS

ITEM 003.1-1 Refer to attached Specification Section **00 22 13.00 20 – SUPPLEMENTARY INSTRUCTIONS TO OFFERORS**, Dated November 5, 2025:

1. Specification Section 00 22 13.00 20 is hereby **revised and re-issued** in its entirety. Replace Specification Section 00 22 13.00 20 dated May 15, 2025 with attached revised Specification Section 00 22 13.00 20 (Revision) dated November 5, 2025.

ITEM 003.1-2 Refer to attached Specification Section **32 92 19 – SEEDING**, Dated November 5, 2025:

1. Specification Section 32 92 19 is hereby **revised and re-issued** in its entirety. Replace Specification Section 32 92 19 dated May 15, 2025 with attached revised Specification Section 32 92 19 (Revision) dated November 5, 2025.

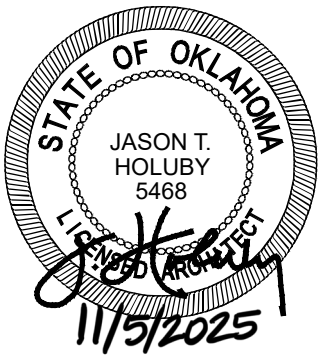

MODIFICATIONS TO THE DRAWINGS

ITEM 003.2-1 Refer to attached Drawing **G-001 – COVER SHEET**, (Revision) dated November 5, 2025:

1. Drawing G-001 is hereby **revised and re-issued** in its entirety. Replace Drawing G-001 dated May 15, 2025 with attached revised Drawing G-001 (Revision) dated November 5, 2025.

ITEM 003.2-2 Refer to attached Drawing **CS101 – CIVIL – SITE LAYOUT PLAN (BASE BID)**, (Revision) dated November 5, 2025:

1. Drawing CS101 is hereby **revised and re-issued** in its entirety. Replace Drawing CS101 dated May 15, 2025 with attached revised Drawing CS101 (Revision) dated November 5, 2025.

ITEM 003.2-3 Refer to attached Drawing **CS102 – CIVIL – SITE LAYOUT PLAN (OPTIONAL LINE ITEMS - OLIS)**, (Revision) dated November 5, 2025:

1. Drawing CS102 is hereby **revised and re-issued** in its entirety. Replace Drawing CS102 dated May 15, 2025 with attached revised Drawing CS102 (Revision) dated November 5, 2025.

ITEM 003.2-4 Refer to attached Drawing **CU101 – CIVIL – UTILITY LAYOUT PLAN (BASE BID)**, (Revision) dated November 5, 2025:

1. Drawing CU101 is hereby **revised and re-issued** in its entirety. Replace Drawing CU101 dated July 22, 2025 with attached revised Drawing CU101 (Revision) dated November 5, 2025.

ITEM 003.2-5 Refer to attached Drawing **CU102 – CIVIL – UTILITY LAYOUT PLAN (OPTIONAL LINE ITEMS – OLIS)**, (Revision) dated November 5, 2025:

1. Drawing CU102 is hereby **revised and re-issued** in its entirety. Replace Drawing CU102 dated July 22, 2025 with attached revised Drawing CU102 (Revision) dated November 5, 2025.

ITEM 003.2-6 Refer to attached Drawing **C-504 – CIVIL – SITE DETAILS – SHEET 1**, (Revision) dated November 5, 2025:

1. Drawing C-504 is hereby **revised and re-issued** in its entirety. Replace Drawing C-504 dated May 15, 2025 with attached revised Drawing C-504 (Revision) dated November 5, 2025.

ITEM 003.2-7 Refer to attached Drawing **SB502 – FOUNDATION DETAILS**, (Revision) dated November 5, 2025:

1. Drawing SB502 is hereby **revised and re-issued** in its entirety. Replace Drawing SB502 dated May 15, 2025 with attached revised Drawing SB502 (Revision) dated November 5, 2025.

ITEM 003.2-8 Refer to attached Drawing **AE101 – FLOOR PLANS**, (Revision) dated November 5, 2025:

1. Drawing AE101 is hereby **revised and re-issued** in its entirety. Replace Drawing AE101 dated July 22, 2025 (Addm 2) with attached revised Drawing AE101 (Revision) dated November 5, 2025.

ITEM 003.2-9 Refer to attached Drawing **AE102 – MECHANICAL YARD SCREEN WALL PLAN AND DETAILS**, (Revision) dated November 5, 2025:

1. Drawing AE102 is hereby **revised and re-issued** in its entirety. Replace Drawing AE102 dated May 15, 2025 with attached revised Drawing AE102 (Revision) dated November 5, 2025.

ITEM 003.2-10 Refer to attached Drawing **AE501 – SECTION DETAILS**, (Revision) dated November 5, 2025:

1. Drawing AE501 is hereby **revised and re-issued** in its entirety. Replace Drawing AE501 dated May 15, 2025 with attached revised Drawing AE501 (Revision) dated November 5, 2025.

ITEM 003.2-11 Refer to attached Drawing **IF101 – FURNITURE AND EQUIPMENT PLAN**, (Revision) dated November 5, 2025:

1. Drawing IF101 is hereby **revised and re-issued** in its entirety. Replace Drawing IF101 dated May 15, 2025 with attached revised Drawing IF101 (Revision) dated November 5, 2025.

ITEM 003.2-12 Refer to attached Drawing **FX401 – FIRE PROTECTION ENLARGED PLANS AND SECTIONS**, (Revision) Dated November 5, 2025:

1. Drawing FX401 is hereby **revised and re-issued** in its entirety. Replace Drawing FX401 dated May 15, 2025 with attached revised Drawing FX401 (Revision) dated November 5, 2025.

ITEM 003.2-13 Refer to attached Drawing **EL101 – ELECTRICAL INTERIOR LIGHTING**, (Revision) dated November 5, 2025:

1. Drawing EL101 is hereby **revised and re-issued** in its entirety. Replace Drawing EL101 dated May 15, 2025 with attached revised Drawing EL101 (Revision) dated November 5, 2025.

ITEM 003.2-14 Refer to attached Drawing **EP101 – GROUND FLOOR ELECTRICAL POWER PLAN**, (Revision) dated November 5, 2025:

1. Drawing EP101 is hereby **revised and re-issued** in its entirety. Replace Drawing EP101 dated May 15, 2025 with attached revised Drawing EP101 (Revision) dated November 5, 2025.

ITEM 003.2-15 Refer to attached Drawing **EP102 – GROUND FLOOR MECHANICAL POWER PLAN**, (Revision) dated November 5, 2025:

1. Drawing EP102 is hereby **revised and re-issued** in its entirety. Replace Drawing EP102 dated May 15, 2025 with attached revised Drawing EP102 (Revision) dated November 5, 2025.

ITEM 003.2-16 Refer to attached Drawing **EP600 – ONE-LINE DIAGRAMS**, (Revision) dated November 5, 2025:

1. Drawing EP600 is hereby **revised and re-issued** in its entirety. Replace Drawing EP600 dated May 15, 2025 with attached revised Drawing EP600 (Revision) dated November 5, 2025.

ITEM 003.2-17 Refer to attached Drawing **EP700 – PANEL SCHEDULES**, (Revision) dated November 5, 2025:

1. Drawing EP700 is hereby **revised and re-issued** in its entirety. Replace Drawing EP700 dated May 15, 2025 with attached revised Drawing EP700 (Revision) dated November 5, 2025.

ITEM 003.2-18 Refer to attached Drawing **EP703 – PANEL SCHEDULES**, (Revision) dated November 5, 2025:

1. Drawing EP703 is hereby **revised and re-issued** in its entirety. Replace Drawing EP703 dated May 15, 2025 with attached revised Drawing EP703 (Revision) dated November 5, 2025.

ITEM 003.2-19 Refer to attached Drawing **EY101 – TELECOMMUNICATIONS SPECIAL SYSTEMS GROUND FLOOR PLAN**, (Revision) dated November 5, 2025:

1. Drawing EY101 is hereby **revised and re-issued** in its entirety. Replace Drawing EY101 dated July 22, 2025 (Addm 2) with attached revised Drawing EY101 (Revision) dated November 5, 2025.

BIDDER RFI RESPONSES

N/A.

SUSTITUTION REQUESTS

N/A.

NEW JERSEY AIR NATIONAL GUARD - 177TH FIGHTER WING

F-16 Mission Training Center (MTC)

Atlantic City Air National Guard Base - Egg Harbor Township, NJ

Project Number: AQRC189015

OPTION LINE ITEMS:

OLI #1: SITE DEMO, PROVIDE NEW BITUMINOUS & CONCRETE PAVEMENTS AND STRIPING – WEST PARKING AREA (42 SPACES). 1

OLI #2: RESURFACE AND RE-STRIPE BITUMINOUS PARKING PAVEMENT AND PARKING LOT ISLANDS CLEANUP - SOUTH PARKING AREA (66 SPACES). 1

OLI #3: PROVIDE ADDITIONAL MASONRY VENEER ON BUILDING EXTERIOR - I.L.O. INSULATED METAL WALL PANEL SYSTEM.

OLI #4: PROVIDE VERTICAL BUILDING ENTRY MONOLITH (BASE BID: NO MONOLITH) (ENTRY CANOPY TO REMAIN IN BASE BID)

OLI #5: MECHANICAL EQUIPMENT YARD: PROVIDE MASONRY WALL (2 SEGMENTS ONLY) - I.L.O. CHAIN-LINK FENCE WITH VISUAL SLATS. 1

OLI #6: PROVIDE CONCRETE SURFACE AT MECHANICAL YARD - I.L.O 1 1/2" MAX COMPACTED ANGULAR STONE GROUND COVER.

OLI #7: PROVIDE ILLUMINATED UNIT INSIGNIA SIGN AT BUILDING EXTERIOR (BASE BID: NO INSIGNIA SIGN).

OLI #8: PROVIDE ADDITIONAL CONCRETE PAVEMENTS TO SUPPORT SIMULATOR INSTALL (BASE BID: TURF GRASS).

Addendum No.3 Submission

November 5, 2025

STATE OF OKLAHOMA — JASON T. HOLUBY 5468 — LICENSED PROFESSIONAL ENGINEER — 11/5/2025

COMMONWEALTH OF PENNSYLVANIA — REGISTERED PROFESSIONAL ENGINEER — JOSEPH J. PURPURA — ENGINEER PE084822 — 11/05/2025

PROFESSIONAL STRUCTURAL ENGINEER — TIENG AI LING — 21544 — OKLAHOMA — 11/05/2025

LICENSED PROFESSIONAL ENGINEER — LIANE R. FRANK OZMUN — 15515 — OKLAHOMA — 11/05/2025

ADAM SCHULTZ — LICENSED — 17272 — 11/5/2025 — KANSAS PROFESSIONAL ENGINEER

LICENSED PROFESSIONAL ENGINEER — Marcus A. Prater — 30821 — OKLAHOMA — 11/05/2025

STATE OF MISSOURI — WILLIAM A. HOWEN — NUMBER PE-2019000176 — 11/5/2025 — PROFESSIONAL ENGINEER

ATKINS
BLACK & VEATCH
FSB JOINT VENTURE

5801 Broadway Extension, Suite 500
Oklahoma City, OK 73118-7436
405.840.2931 | fsb-ae.com

213000 ANG JV/NJ - Flight Simulator

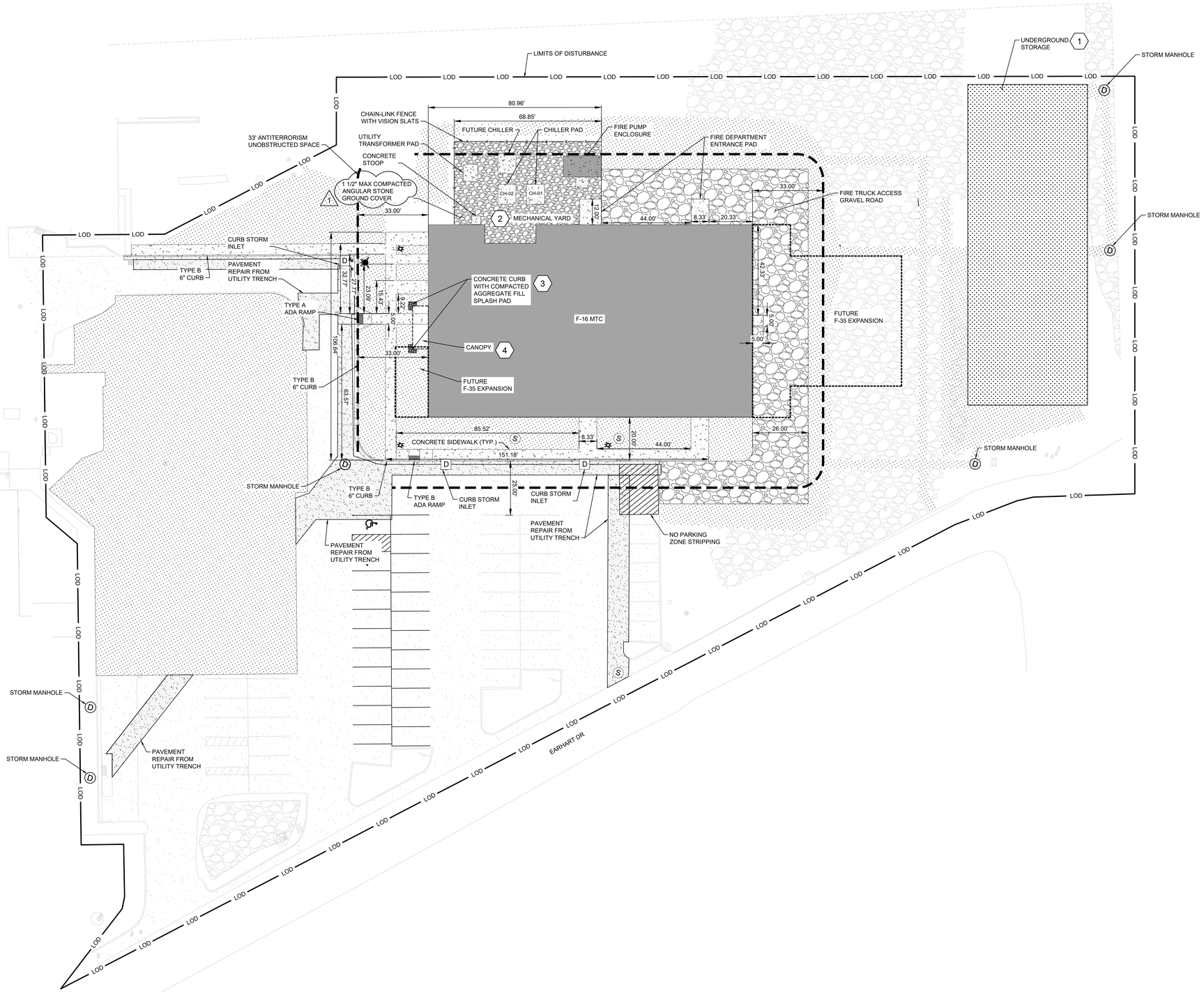

A1 CIVIL - SITE LAYOUT PLAN (BASE BID)
SCALE: 1"=20'

GENERAL NOTES

A. SEE SHEET GC100 FOR PROJECT LOCATION AND VICINITY MAP.
B. SEE SHEET GC101 FOR ACCESS AND HAUL ROUTE PLAN.
C. SEE SHEET C-001 CIVIL LEGEND, GENERAL NOTES, AND ABBREVIATIONS.
D. SEE SHEET V-101 FOR EXISTING CONDITIONS PLAN.
E. SEE SHEET CD101 AND CD102 FOR DEMOLITION PLANS.
F. SEE SHEET CU101 AND CU102 FOR UTILITY LAYOUT PLANS.
G. SEE SHEET CS101 AND CS102 FOR SITE LAYOUT PLANS.
H. SEE SHEET CG101 AND CG102 FOR SITE GRADING AND DRAINAGE PLANS.
I. MILL AND OVERLAY OF EXISTING PARKING LOT IS TO OCCUR AFTER UTILITY TRENCHING.

SHEET KEYNOTES

1. UNDERGROUND STORAGE. SEE C-511 FOR DETAILS.
2. MECHANICAL YARD. SEE MECHANICAL SHEETS FOR REFERENCE.
3. CONCRETE CURB WITH COMPACTED AGGREGATE FILL SPLASH PAD. SEE SHEET C-504 FOR DETAIL.
4. CANOPY. SEE STRUCTURAL SHEETS FOR REFERENCE.

LEGEND

- SIDEWALK
- SEEDING / NATIVE GRASS
- MECHANICAL YARD
- GRAVEL DRIVE FOR FIRE TRUCK ACCESS
- LOD — LIMITS OF DISTURBANCE
- X — X — CHAIN-LINK FENCE WITH VISION SLATS
- D — STORM DRAIN INLET
- S — SANITARY SEWER MANHOLE
- POLE MOUNTED PARKING LIGHTS
- D — STORM MANHOLE

ATKINS BLACK & VEATCH FSB JOINT VENTURE
5801 Broadway Extension, Suite 500
Oklahoma City, OK 73118-7436
405.840.2931 | fsb-ae.com

COMMONWEALTH OF PENNSYLVANIA REGISTERED PROFESSIONAL JOSEPH J. PURPURA ENGINEER PE069822 11/05/2025

177th FIGHTER WING

NEW JERSEY ANG- 177th FW
F-16 Mission Training Center (MTC)
Atlantic City ANG Base
Egg Harbor Township, New Jersey

REVISION HISTORY:

	DESCRIPTION	DATE
1	ADDENDUM NO. 3	11-05-2025

PROJECT INFORMATION:

DESIGNED BY:	J. PURPURA
DRAWN BY:	A. BESCHNETT
REVIEWED BY:	J. BIRK
PROJECT MANAGER:	D. ADAMS

PROJECT NUMBER: 2022-130-00

SHEET TITLE: CIVIL - SITE LAYOUT PLAN (BASE BID)

ISSUE DATE: NOVEMBER 5, 2025

SHEET NUMBER: CS101

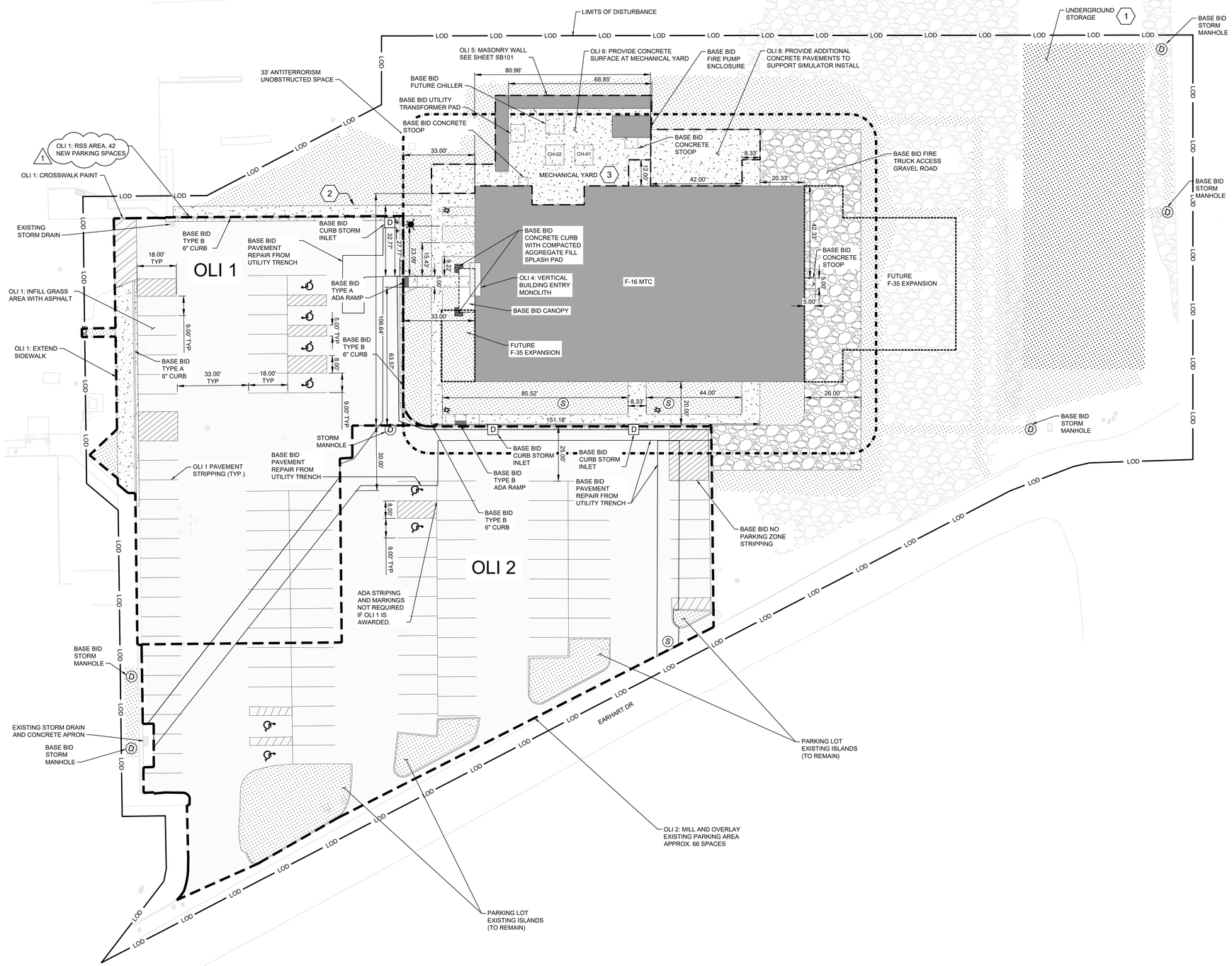

A1 CIVIL - SITE LAYOUT PLAN (OPTIONAL LINE ITEMS - OLIS)
SCALE: 1"=20'

GENERAL NOTES

A. SEE SHEET GC100 FOR PROJECT LOCATION AND VICINITY MAP.
B. SEE SHEET GC101 FOR ACCESS AND HAUL ROUTE PLAN.
C. SEE SHEET C-001 CIVIL LEGEND, GENERAL NOTES, AND ABBREVIATIONS.
D. SEE SHEET V-101 FOR EXISTING CONDITIONS PLAN.
E. SEE SHEET CD101 AND CD102 FOR DEMOLITION PLANS.
F. SEE SHEET CU101 AND CU102 FOR UTILITY LAYOUT PLANS.
G. SEE SHEET CS101 AND CS102 FOR SITE LAYOUT PLANS.
H. SEE SHEET CG101 AND CG102 FOR SITE GRADING AND DRAINAGE PLANS.
I. MILL AND OVERLAY OF EXISTING PARKING LOT IS TO OCCUR AFTER UTILITY TRENCHING.

SHEET KEYNOTES

1. UNDERGROUND STORAGE. SEE C-511 FOR DETAILS.
2. SIDEWALK. SEE C-504 FOR DETAILS.
3. MECHANICAL YARD. SEE MECHANICAL SHEETS FOR REFERENCE.

LEGEND

- CONCRETE
- SEEDING / NATIVE GRASS
- GRAVEL DRIVE FOR FIRE TRUCK ACCESS
- LOD — LIMITS OF DISTURBANCE
- CONSTRUCTION STAGING AREA
- OPTIONAL LINE ITEMS (OLIS) OUTLINE
- D — STORM DRAIN INLET
- S — SANITARY SEWER MANHOLE
- POLE MOUNTED PARKING LIGHTS
- D — STORM MANHOLE

ATKINS BLACK & VEATCH FSB JOINT VENTURE
5801 Broadway Extension, Suite 500
Oklahoma City, OK 73118-7436
405.840.2931 | fsb-ae.com

COMMONWEALTH OF PENNSYLVANIA REGISTERED PROFESSIONAL JOSEPH J. PURPURA ENGINEER PE069822 11/05/2025

177th FIGHTER WING

NEW JERSEY ANG- 177th FW
F-16 Mission Training Center (MTC)
Atlantic City ANG Base
Egg Harbor Township,New Jersey

REVISION HISTORY:

1	ADDENDUM NO. 3	11-05-2025
△	DESCRIPTION	DATE

PROJECT INFORMATION:

DESIGNED BY: J. PURPURA
DRAWN BY: A. BESCHNETT
REVIEWED BY: J. BIRK
PROJECT MANAGER: D. ADAMS
PROJECT NUMBER: 2022-130-00
SHEET TITLE: CIVIL - SITE LAYOUT PLAN (OPTIONAL LINE ITEMS - OLIS)
ISSUE DATE: NOVEMBER 5, 2025
SHEET NUMBER: CS102

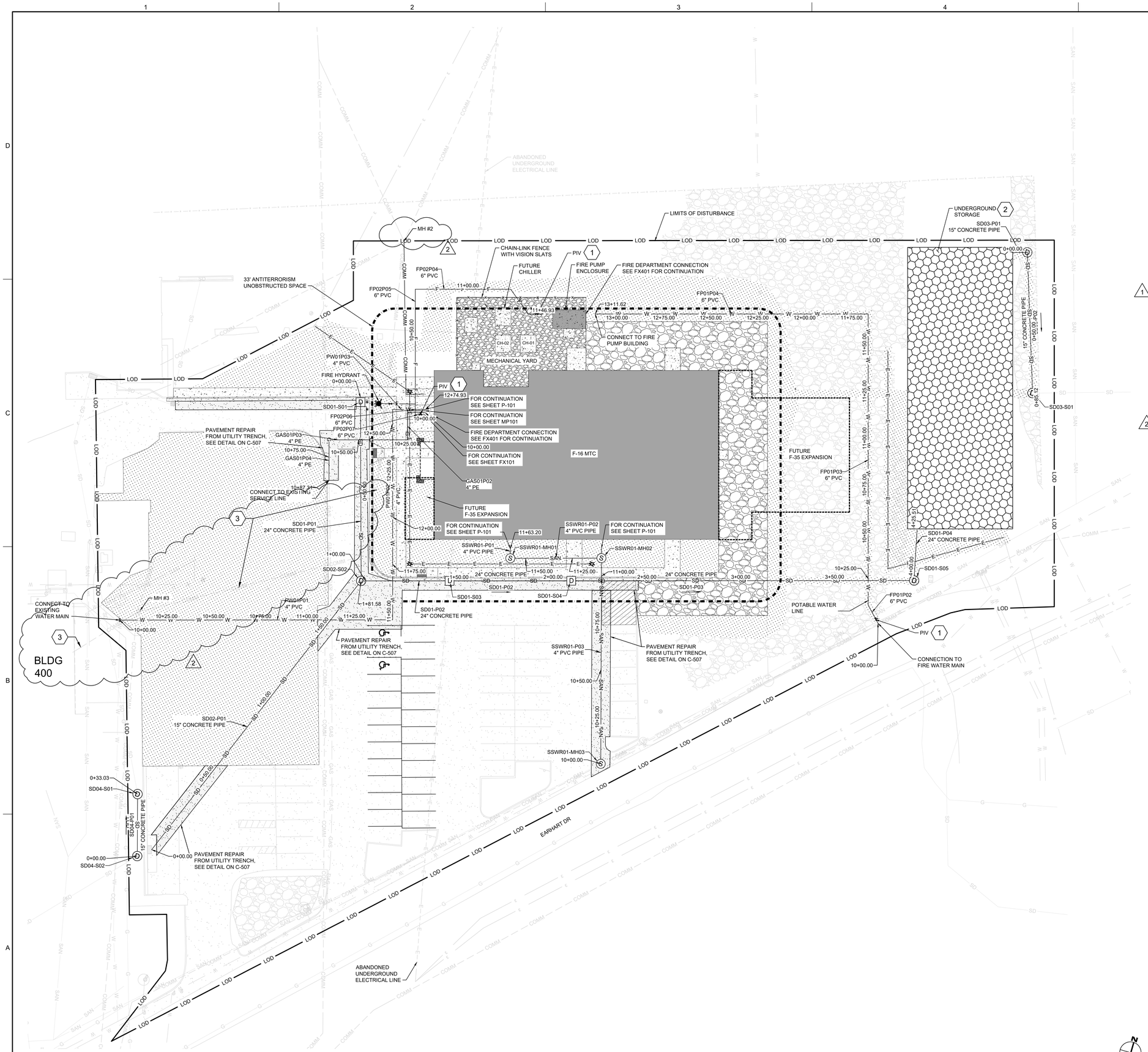

A1 CIVIL - UTILITY LAYOUT PLAN (BASE BID)
SCALE: 1"=20'

GENERAL NOTES

A. SEE SHEET GC100 FOR PROJECT LOCATION AND VICINITY MAP.
B. SEE SHEET GC101 FOR ACCESS AND HAUL ROUTE PLAN.
C. SEE SHEET C-001 CIVIL LEGEND, GENERAL NOTES, AND ABBREVIATIONS.
D. SEE SHEET V-101 FOR EXISTING CONDITIONS PLAN.
E. SEE SHEET CD101 FOR DEMOLITION PLAN.
F. SEE SHEET CU101 AND CU102 FOR UTILITY LAYOUT PLANS.
G. SEE SHEET CS101 AND CS102 FOR SITE LAYOUT PLANS.
H. SEE SHEET CG101 AND CG102 FOR SITE GRADING AND DRAINAGE PLANS.
I. FIRE PROTECTION PIPING AND WATER LINES SERVING HYDRANTS MUST BE INSTALLED, FLUSHED AND TESTED PER NFPA 24. SUBMIT FLUSHING PLAN WITH DIVISION 21 PRELIMINARY TEST PLAN. SUBMIT NFPA 24 CONTRACTOR'S MATERIAL AND TEST CERTIFICATES FOR UNDERGROUND PIPING FOR ALL FIRE PROTECTION PIPING.
J. PIPING SERVING THE FIRE PUMP ENCLOSURE MUST BE FLUSHED AT MINIMUM 1500 GPM OR 150% OF FIRE PUMP RATED CAPACITY WITHOUT THE USE OF THE FIRE PUMP.
K. DECHLOR DEMON OR EQUIVALENT DEVICE TO DECHLORINATE THE WATER BEFORE DISCHARGED TO THE ENVIRONMENT. INCLUDE DECHLORINATION DEVICE WITH FLUSHING PLAN PER NFPA 24.
L. MILL AND OVERLAY OF EXISTING PARKING LOT IS TO OCCUR AFTER UTILITY TRENCHING.
M. SOUTH JERSEY GAS IS THE OWNER OF THE SITE NATURAL GAS SYSTEM. COORDINATION WITH SOUTH JERSEY GAS IS REQUIRED TO CONFIRM THE FINALIZED CONNECTION POINTS TO EXISTING INFRASTRUCTURE.

SHEET KEYNOTES

1. PIV. CONNECT TO 6" STAINLESS STEEL LEAD IN. SEE FA601 FOR TAMPER SWITCH CONTINUATION.
2. UNDERGROUND STORAGE. SEE C-511 FOR DETAILS.
3. PROVIDE 50 PAIR COPPER AND 48 SMF O2 CABLING FROM THE F-16 MTC BLDG TO B400, ITN ROOM 122. THE OUTSIDE PLANT (OSP) PATH IS FROM THE F-16 MTC THROUGH MAN-HOLE (MH) NO. 2 (IN NEW CONDUIT), THEN THROUGH MAN-HOLE (MH) NO. 3, AND INTO BUILDING B400 (IN EXISTING CONDUIT), THEN TO ITN ROOM 122. COORDINATE INSIDE PLANT (ISP) PATH WITHIN B400 WITH THE BDOC AND BASE COMM PERSONNEL.

LEGEND

- SIDEWALK
- SEEDING / NATIVE GRASS
- MECHANICAL YARD
- GRAVEL DRIVE FOR FIRE TRUCK ACCESS
- UNDERGROUND STORAGE WITH SEEDING ON TOP
- LOD — LIMITS OF DISTURBANCE
- X — X — CHAIN-LINK FENCE WITH VISION SLATS
- F — F — FIRE PROTECTION LINE
- SD — STORM DRAIN LINE
- G — GAS LINE
- SAN — SANITARY SEWER LINE
- W — WATER LINE
- COMM — COMMUNICATIONS DUCTBANK LINE
- E — E — ELECTRICAL DUCTBANK LINE
- FIRE HYDRANT
- D — STORM DRAIN INLET
- S — SANITARY SEWER MANHOLE
- POLE MOUNTED PARKING LIGHTS
- D — STORM MANHOLE

ATKINS BLACK & VEATCH FSB JOINT VENTURE
5801 Broadway Extension, Suite 500
Oklahoma City, OK 73118-7436
405.840.2931 | fsb-ae.com

COMMONWEALTH OF PENNSYLVANIA REGISTERED PROFESSIONAL JOSEPH J. PURPURA 11/05/2025 ENGINEER PE079 4822

177th FIGHTER WING

NEW JERSEY ANG- 177th FW
F-16 Mission Training Center (MTC)
Atlantic City ANG Base
Egg Harbor Township, New Jersey

REVISION HISTORY:

	DESCRIPTION	DATE
2	ADDENDUM NO. 3	11-05-2025
1	ADDENDUM NO. 2	7-22-2025

PROJECT INFORMATION:

DESIGNED BY:	J. PURPURA
DRAWN BY:	A. BESCHNETT
REVIEWED BY:	J. BIRK
PROJECT MANAGER:	D. ADAMS

PROJECT NUMBER: 2022-130-00

SHEET TITLE: CIVIL - UTILITY LAYOUT PLAN (BASE BID)

ISSUE DATE: NOVEMBER 5, 2025

SHEET NUMBER: CU101

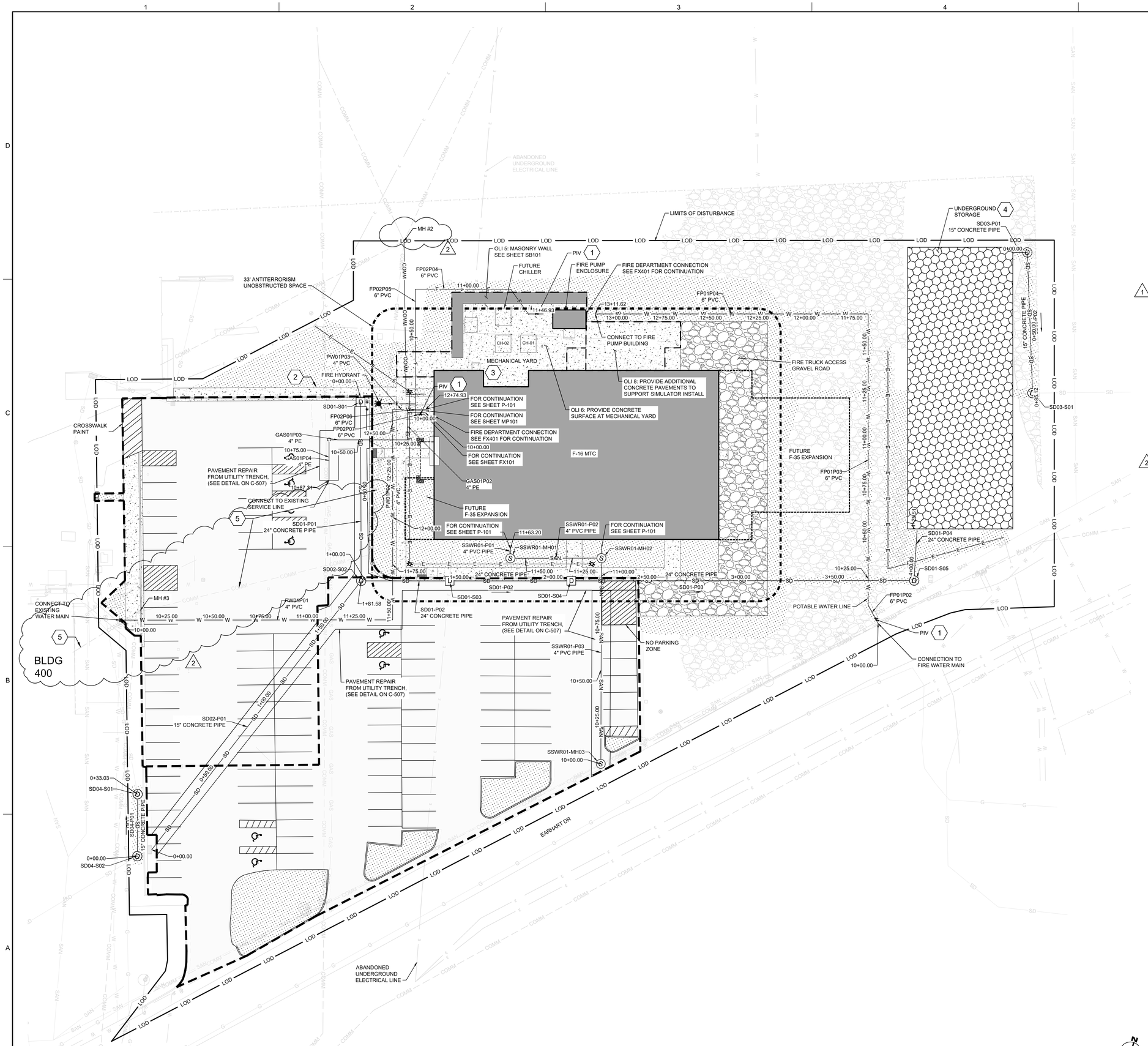

A1 CIVIL - UTILITY LAYOUT PLAN (OPTIONAL LINE ITEMS - OLIS)
SCALE: 1"=20'

GENERAL NOTES

A. SEE SHEET GC100 FOR PROJECT LOCATION AND VICINITY MAP.
B. SEE SHEET GC101 FOR ACCESS AND HAUL ROUTE PLAN.
C. SEE SHEET C-001 CIVIL LEGEND, GENERAL NOTES, AND ABBREVIATIONS.
D. SEE SHEET V-101 FOR EXISTING CONDITIONS PLAN.
E. SEE SHEET CD101 FOR DEMOLITION PLAN.
F. SEE SHEET CU101 AND CU102 FOR UTILITY LAYOUT PLANS.
G. SEE SHEET CS101 AND CS102 FOR SITE LAYOUT PLANS.
H. SEE SHEET CG101 AND CG102 FOR SITE GRADING AND DRAINAGE PLANS.
I. FIRE PROTECTION PIPING AND WATER LINES SERVING HYDRANTS MUST BE INSTALLED, FLUSHED AND TESTED PER NFPA 24. SUBMIT FLUSHING PLAN WITH DIVISION 21 PRELIMINARY TEST PLAN. SUBMIT NFPA 24 CONTRACTOR'S MATERIAL AND TEST CERTIFICATES FOR UNDERGROUND PIPING FOR ALL FIRE PROTECTION PIPING.
J. PIPING SERVING THE FIRE PUMP ENCLOSURE MUST BE FLUSHED AT MINIMUM 1500 GPM OR 150% OF FIRE PUMP RATED CAPACITY WITHOUT THE USE OF THE FIRE PUMP.
K. DECHLOR DEMON OR EQUIVALENT DEVICE TO DECHLORINATE THE WATER BEFORE DISCHARGED TO THE ENVIRONMENT. INCLUDE DECHLORINATION DEVICE WITH FLUSHING PLAN PER NFPA 24.
L. MILL AND OVERLAY OF EXISTING PARKING LOT IS TO OCCUR AFTER UTILITY TRENCHING.
M. SOUTH JERSEY GAS IS THE OWNER OF THE SITE NATURAL GAS SYSTEM. COORDINATION WITH SOUTH JERSEY GAS IS REQUIRED TO CONFIRM THE FINALIZED CONNECTION POINTS TO EXISTING INFRASTRUCTURE.

SHEET KEYNOTES

1. PIV. CONNECT TO 6" STAINLESS STEEL LEAD IN. SEE FA601 FOR TAMPER SWITCH CONTINUATION.
2. SIDEWALK. SEE C-504 FOR DETAILS.
3. MECHANICAL YARD. SEE MECHANICAL SHEETS FOR REFERENCE.
4. UNDERGROUND STORAGE. SEE C-511 FOR DETAILS.
5. PROVIDE 50 PAIR COPPER AND 48 SMF O2 CABLING FROM THE F-16 MTC BLDG TO B400, ITN ROOM 122. THE OUTSIDE PLANT (OSP) PATH IS FROM THE F-16 MTC THROUGH MAN-HOLE (MH) NO. 2 (IN NEW CONDUIT), THEN THROUGH MAN-HOLE (MH) NO. 3, AND INTO BUILDING B400 (IN EXISTING CONDUIT), THEN TO ITN ROOM 122. COORDINATE INSIDE PLANT (ISP) PATH WITHIN B400 WITH THE BDOC AND BASE COMM PERSONNEL.

LEGEND

- CONCRETE
- SEEDING / NATIVE GRASS
- GRAVEL DRIVE FOR FIRE TRUCK ACCESS
- UNDERGROUND STORAGE WITH SEEDING ON TOP
- LOD — LIMITS OF DISTURBANCE
- X — CHAIN-LINK FENCE WITH VISION SLATS
- F — FIRE PROTECTION LINE
- SD — STORM DRAIN LINE
- G — GAS LINE
- SAN — SANITARY SEWER LINE
- W — WATER LINE
- COMM — COMMUNICATIONS DUCTBANK LINE
- E — ELECTRICAL DUCTBANK LINE
- FIRE HYDRANT
- D — STORM DRAIN INLET
- S — SANITARY SEWER MANHOLE
- POLE MOUNTED PARKING LIGHTS
- D — STORM MANHOLE

ATKINS BLACK & VEATCH FSB JOINT VENTURE
5801 Broadway Extension, Suite 500
Oklahoma City, OK 73118-7436
405.840.2931 | fsb-ae.com

COMMONWEALTH OF PENNSYLVANIA
REGISTERED PROFESSIONAL ENGINEER
JOSEPH J. PURPURA
PE059482E
11/05/2025

177th FIGHTER WING

NEW JERSEY ANG- 177th FW
F-16 Mission Training Center (MTC)
Atlantic City ANG Base
Egga Harbor Township,New Jersey

REVISION HISTORY:

2	ADDENDUM NO. 3	11-05-2025
1	ADDENDUM NO. 2	7-22-2025
△	DESCRIPTION	DATE

PROJECT INFORMATION:

DESIGNED BY: J. PURPURA
DRAWN BY: A. BESCHNETT
REVIEWED BY: J. BIRK
PROJECT MANAGER: D. ADAMS
PROJECT NUMBER: 2022-130-00
SHEET TITLE: CIVIL - UTILITY LAYOUT PLAN (OPTIONAL LINE ITEMS - OLIS)
ISSUE DATE: NOVEMBER 5, 2025
SHEET NUMBER: CU102

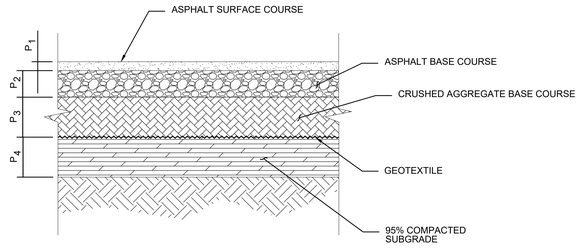

D1 TYPICAL FULL DEPTH ASPHALT PAVING SECTION
SCALE: NTS

PAVEMENT SECTION DIMENSION		
TYPE	PAVEMENT THICKNESS	ROADS (IN.)
ASPHALT	P_1	2
	P_2	4
	P_3	13
	P_4	12

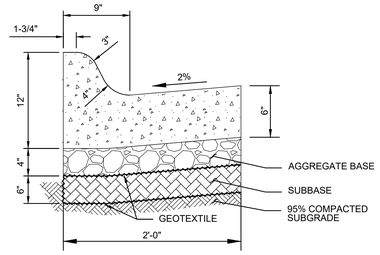

D2 TYPE A CONCRETE CURB AND GUTTER
SCALE: NTS

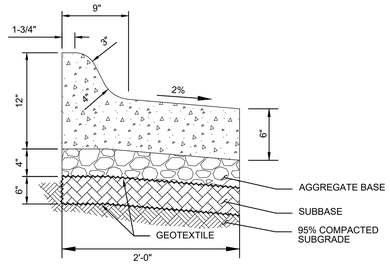

D4 TYPE B CONCRETE CURB AND GUTTER
SCALE: NTS

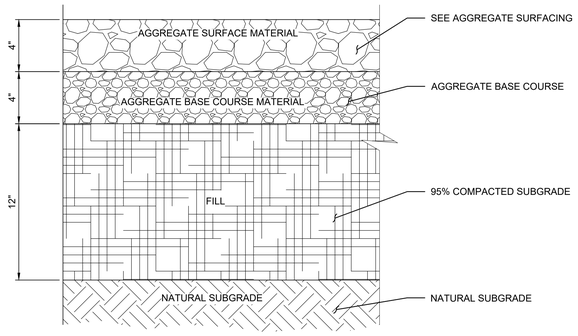

B1 AGGREGATE SURFACE TYPICAL SECTION
SCALE: NTS

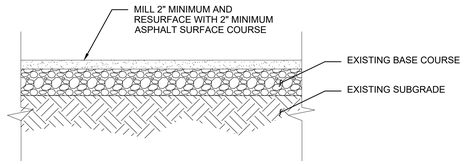

C2 MILL AND OVERLAY PAVING SECTION
SCALE: NTS

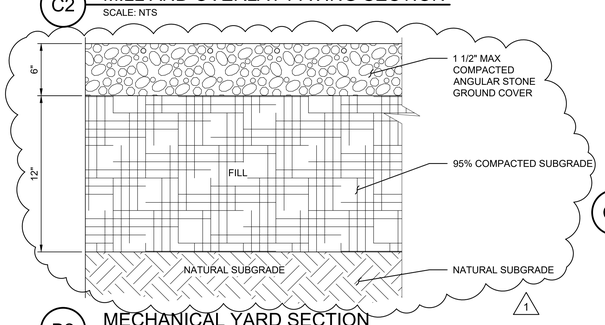

B2 MECHANICAL YARD SECTION
SCALE: NTS

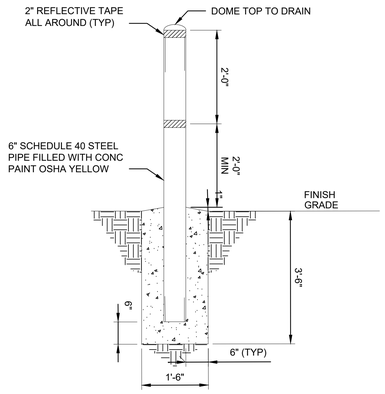

C4 TYPICAL BOLLARD DETAIL
SCALE: NTS

SIDEWALK WIDTH	CONTRACTION JOINT SPACING	EXPANSION JOINT SPACING
5 FT	5 FT	50 FT
8 FT	4 FT	48 FT

NOTES:

1. CONTRACTION JOINTS MUST BE FORMED (OR SAWCUT) TO A DEPTH EQUAL TO 1/4 OF THE THICKNESS OF THE SIDEWALK AND EDGED WITH 1/8" RADIUS.
2. 1/2" EXPANSION JOINT MATERIAL MUST BE PROVIDED AT INTERVALS NOT TO EXCEED 50' AND WHERE WALKS ABUT OTHER CONCRETE STRUCTURES, EXCLUDING WALKS LAID PARALLEL AND ABUTTING CURB AND GUTTER.
3. CONCRETE MUST HAVE A MINIMUM COMPRESSIVE STRENGTH OF 4500 PSI.

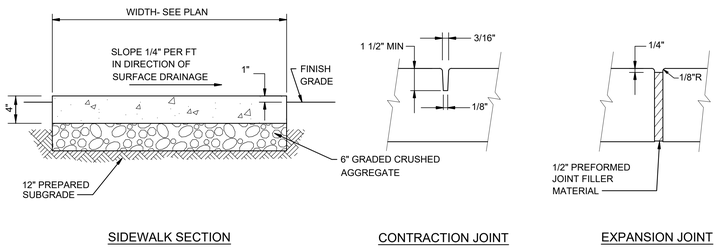

SIDEWALK SECTION

CONTRACTION JOINT

EXPANSION JOINT

NOTE:
1. SEE TABLE ON THIS SHEET FOR JOINT SPACING.

A1 JOINT CONCRETE SIDEWALK SECTION
SCALE: NTS

GENERAL NOTES

A. SEE SHEET GC100 FOR PROJECT LOCATION AND VICINITY MAP.
B. SEE SHEET GC101 FOR ACCESS AND HAUL ROUTE PLAN.
C. SEE SHEET C-001 CIVIL LEGEND, GENERAL NOTES, AND ABBREVIATIONS.
D. SEE SHEET V-101 FOR EXISTING CONDITIONS PLAN.
E. SEE SHEET CD101 FOR DEMOLITION PLAN.
F. SEE SHEET CU101 AND CU102 FOR UTILITY LAYOUT PLANS.
G. SEE SHEET CS101 AND CS102 FOR SITE LAYOUT PLANS.
H. SEE SHEET CG101 AND CG102 FOR SITE GRADING AND DRAINAGE PLANS.
I. MILL AND OVERLAY OF EXISTING PARKING LOT IS TO OCCUR AFTER UTILITY TRENCHING.

ATKINS
BLACK & VEATCH
FSB JOINT VENTURE

5801 Broadway Extension, Suite 500
Oklahoma City, OK 73118-7436
405.840.2931 | fsb-ae.com

COMMONWEALTH OF PENNSYLVANIA
REGISTERED PROFESSIONAL
JOSEPH J. PURPURA
11/05/2025
ENGINEER
PE069822

177th FIGHTER WING

NEW JERSEY ANG- 177th FW
F-16 Mission Training Center (MTC)
Atlantic City ANG Base
Egg Harbor Township,New Jersey

REVISION HISTORY:

1	ADDENDUM NO. 3	11-05-2025
△	DESCRIPTION	DATE

PROJECT INFORMATION:

DESIGNED BY: J. PURPURA
DRAWN BY: A. BESCHNETT
REVIEWED BY: J. BIRK
PROJECT MANAGER: D. ADAMS

PROJECT NUMBER: 2022-130-00

SHEET TITLE: CIVIL - SITE DETAILS - SHEET 1

ISSUE DATE: NOVEMBER 5, 2025

SHEET NUMBER: C-504

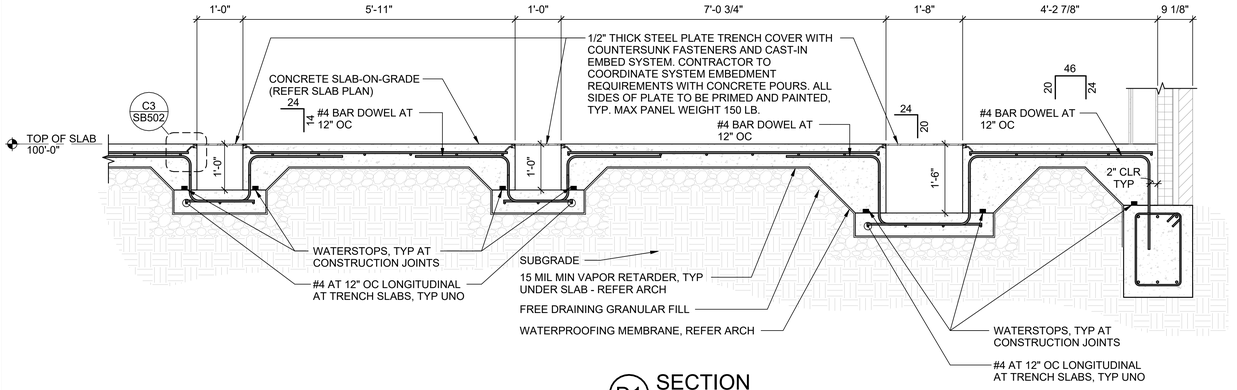

D1 SECTION
SCALE: 3/4" = 1'-0"

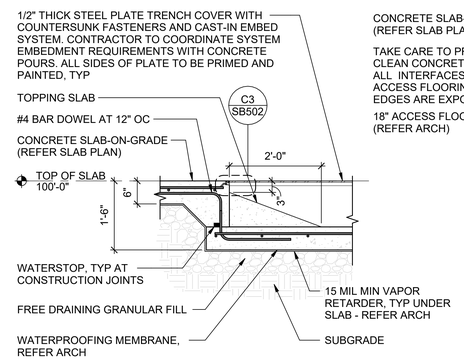

D4 SECTION
SCALE: 3/4" = 1'-0"

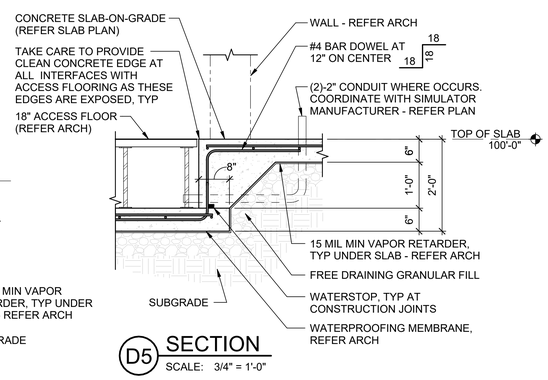

D5 SECTION
SCALE: 3/4" = 1'-0"

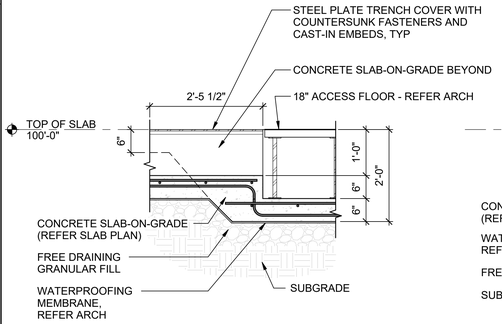

C1 SECTION
SCALE: 3/4" = 1'-0"

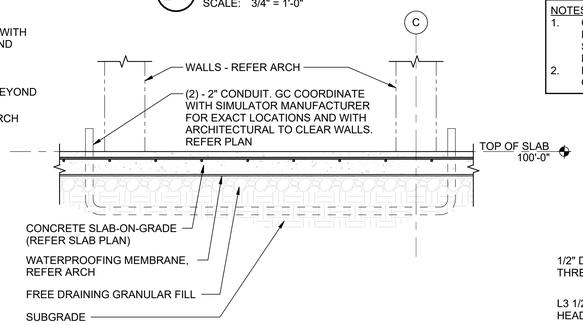

C2 SECTION
SCALE: 3/4" = 1'-0"

NOTES:
1. GC COORDINATE CABLE PENETRATIONS AND PANEL SEGMENTING WITH SIMULATOR MANUFACTURER.
2. DETAIL ALSO APPLIES AT ENDS OF TRENCHES, SIMILAR.

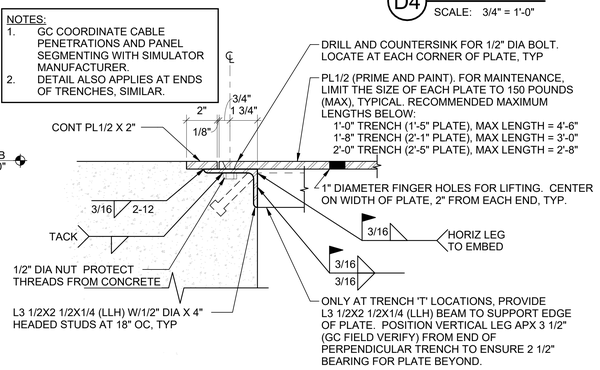

C3 TRENCH DETAIL
SCALE: 3" = 1'-0"

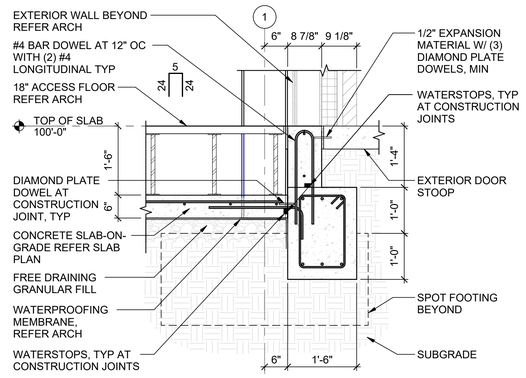

C5 SECTION
SCALE: 3/4" = 1'-0"

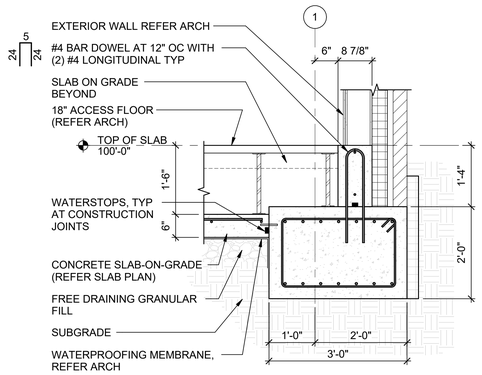

B1 SECTION
SCALE: 3/4" = 1'-0"

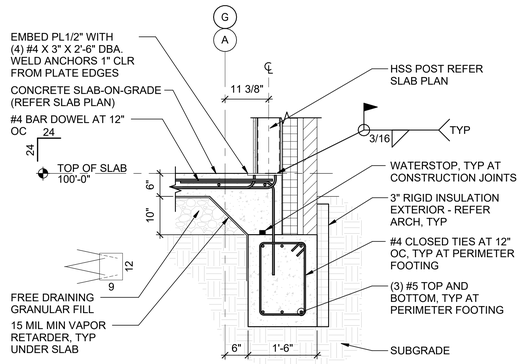

B2 SECTION
SCALE: 3/4" = 1'-0"

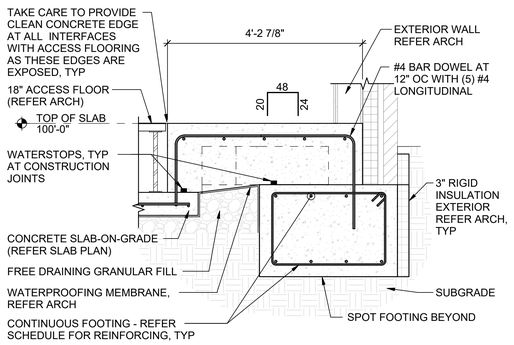

B3 SECTION
SCALE: 3/4" = 1'-0"

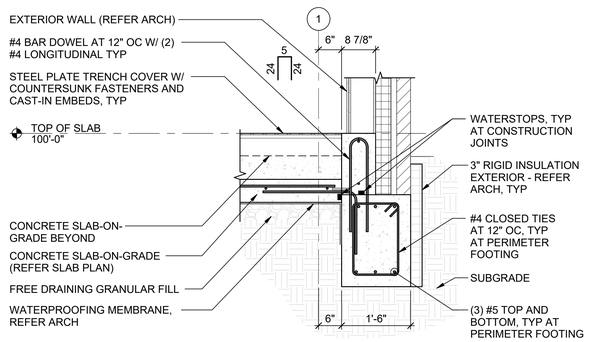

B5 SECTION
SCALE: 3/4" = 1'-0"

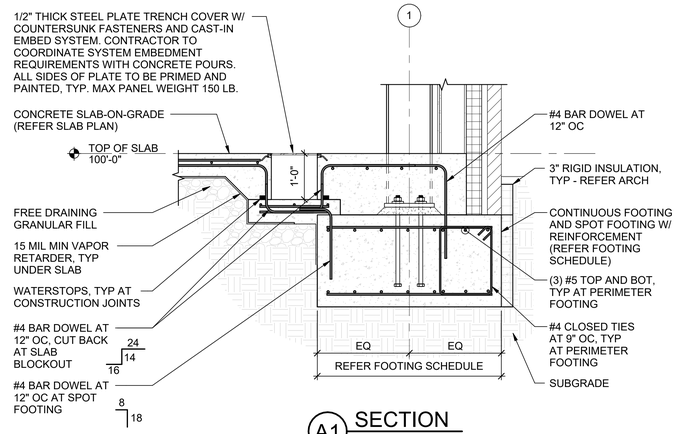

A1 SECTION
SCALE: 3/4" = 1'-0"

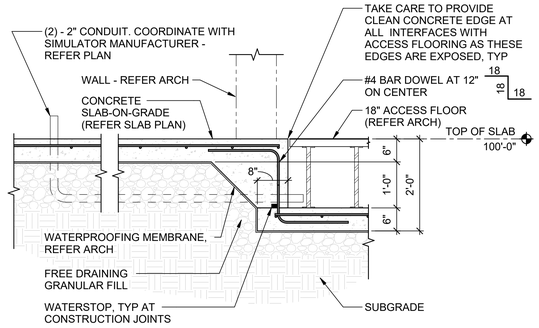

A2 SECTION
SCALE: 3/4" = 1'-0"

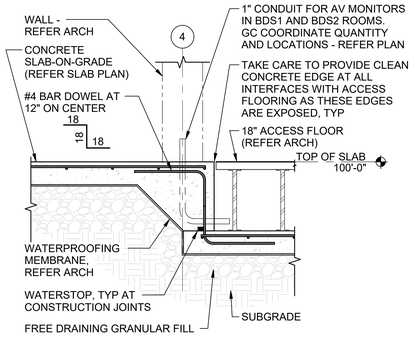

A4 SECTION
SCALE: 3/4" = 1'-0"

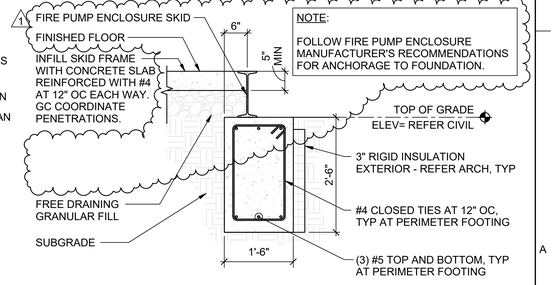

A5 SECTION
SCALE: 3/4" = 1'-0"

0 3" 6" 9"
3" = 1'-0"

0 1' 2' 3'
3/4" = 1'-0"

ATKINS BLACK & VEATCH FSB JOINT VENTURE
5801 Broadway Extension, Suite 500
Oklahoma City, OK 73118-7436
405.840.2931 | fsb-ae.com

PROFESSIONAL STRUCTURAL ENGINEER TIENG AI LING 21584 OKLAHOMA 11/05/2025

177th FIGHTER WING

NEW JERSEY ANG - 177th FW
F-16 Mission Training Center (MTC)
Atlantic City ANG Base
Egg Harbor Township, New Jersey

REVISION HISTORY:

1	ADDENDUM NO. 3	11-05-2025
△	DESCRIPTION	DATE

PROJECT INFORMATION:

DESIGNED BY:	MNO
DRAWN BY:	JTO
REVIEWED BY:	BJW
PROJECT MANAGER:	FDN

PROJECT NUMBER: 2022-130-00

SHEET TITLE: FOUNDATION DETAILS

ISSUE DATE: MAY 15, 2025

SHEET NUMBER: SB502

11/3/2025 9:21:41 AM
C:\Users\kasaur\Documents\130900_Shu_kylecasaur.rvt

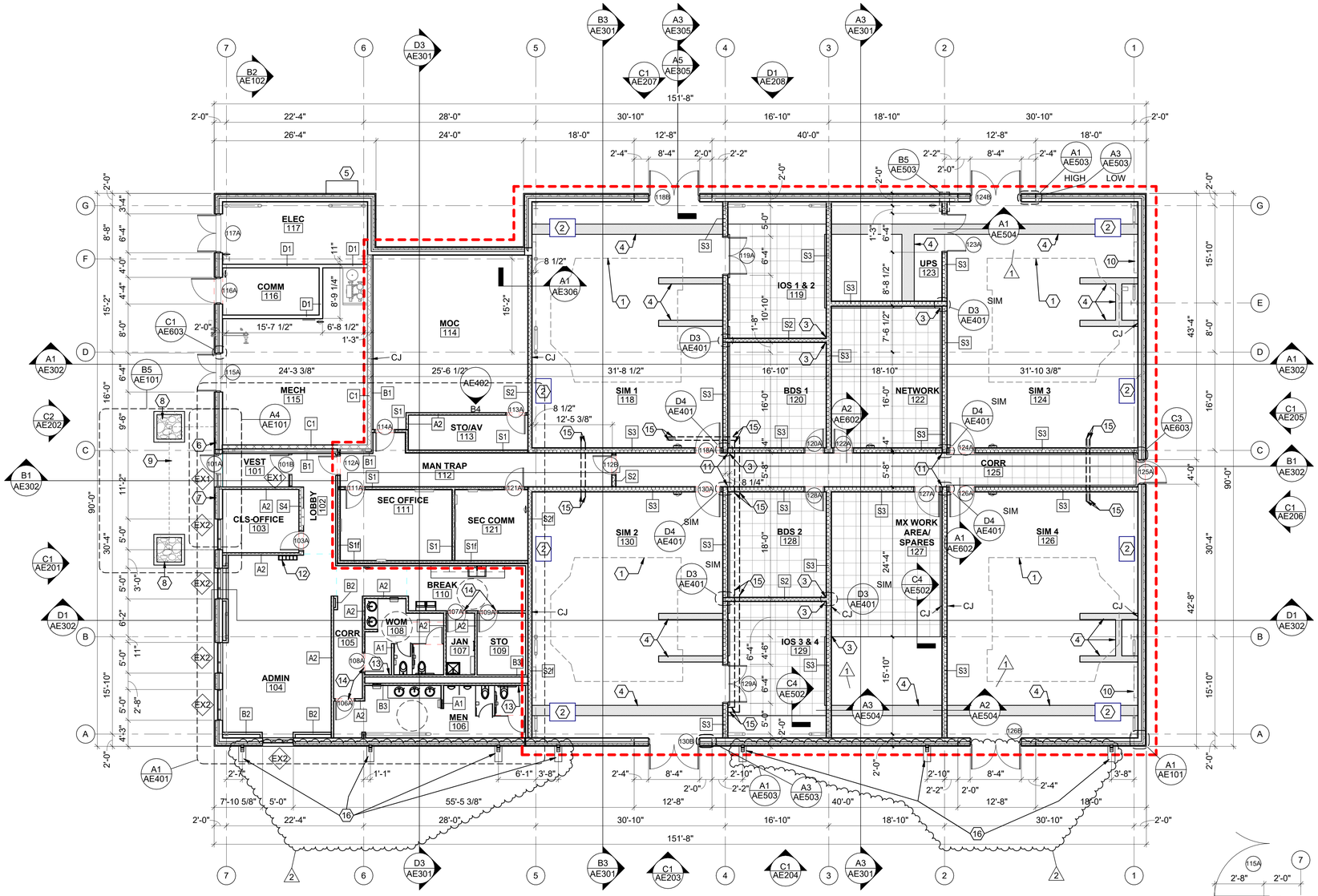

B1 GROUND FLOOR PLAN

SCALE: 1/8" = 1'-0"

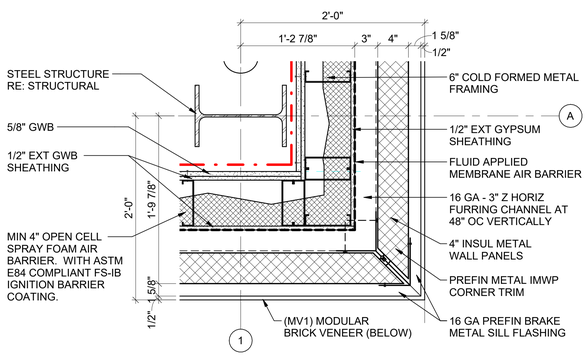

A1 IMWP OUTSIDE CORNER DETAIL

SCALE: 1 1/2" = 1'-0"

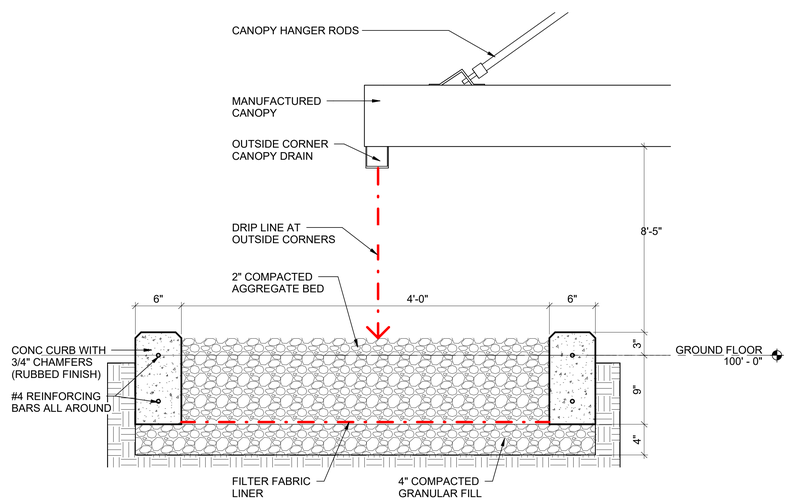

A2 SECTION DETAIL

SCALE: 1 1/2" = 1'-0"

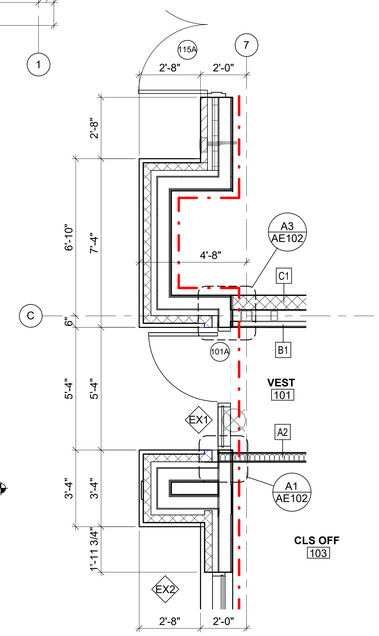

A4 ENTRY PLAN (OLI #4)

SCALE: 3/8" = 1'-0"

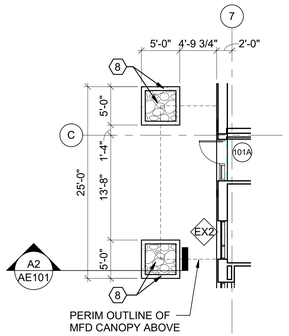

B5 SPLASH PAD PLAN

SCALE: 1/8" = 1'-0"

N PLAN — N TRUE

1/8" = 1'-0"

1 1/2" = 1'-0"

3/8" = 1'-0"

GENERAL NOTES

A. ALL EXTERIOR PERIMETER MASONRY WAINSCOT BASE COURSE DIMENSIONS ARE NOMINAL AND THE CONTRACTOR SHALL BE RESPONSIBLE FOR COORDINATING ADJUSTMENTS AT ALL OPENINGS.
B. ALL INTERIOR DIMENSIONS ARE FROM FACE OF STUD TO FACE OF STUD OR FACE OF CMU OR CONCRETE AS INDICATED - UNLESS NOTED OTHERWISE.
C. ALL STC RATED WALLS INDICATED WITHIN THE 18" RECESSED SLAB AREA SHALL BE CONSTRUCTED TO EXTEND AND SEAL COMPLETELY TO THE CONCRETE SLAB BENEATH THE RAISED ACCESS FLOORING - NOTE: ALL 24"X24" ACCESS TILES SHALL TERMINATE AT THE PERIMETER OF EACH ROOM AS INDICATED.
D. FULL 24" X 24" ACCESS FLOOR TILES SHALL START AT THE LOCATION INDICATED WITH TILES CUT TO FIT AROUND THE REMAINING PERIMETER.
E. THE CONTRACTOR SHALL COORDINATE WITH THE SIMULATOR MFR REGARDING ALL FIXED AND REMOVABLE SECTIONS OF THE 3/8" CHECKER PLATE INCLUDING SIGNAL AND POWER ACCESS POINTS.
F. THE DETAILS OF SIM BAY EXT DOORS 118B, 124B,126B, 130B REFER TO SHEET AE503
G. DRYWALL CONTROL JOINTS LOCATIONS MARKED WITH CJ ARE TO BE PLACED A MINIMUM OF 30'-0" ON CENTERS AT ALL UNINTERRUPTED LENGTHS OF DRYWALL AND CENTERED ON BOTH SIDES OF DOOR FRAMES AT ALL INT DOORS TO TRUE TOP OF WALL. SEE DETAILS A1/AE001 AND A2/AE001.

SHEET KEYNOTES

1. OUTLINE OF FLIGHT SIMULATOR EQUIPMENT.
2. MECHANICAL EQUIPMENT.
3. FULL 24" X 24" ACCESS FLOOR TILE START POINT.
4. PAINTED 1/2" STEEL CHECKER PLATE COVERING CONCRETE TRENCH FOR FUTURE F35 SIMULATOR POWER AND SIGNAL CABLING INSTALLATION. REFER: SPEC SECTION 09 06 00
5. ELECTRICAL EQUIPMENT.
6. BUILDING ENTRANCE SIGN, RE: C1/AE201.
7. FIRE DEPT EMERGENCY POWER OFF KNOX BOX.
8. CONCRETE CURB WITH COMPACTED AGGREGATE FILL SPLASH PAD.
9. MANUFACTURED CANOPY ABOVE.
10. WALL MOUNTED CABLE TRAY. REFER: ET101.
11. FULL HEIGHT GYPSUM WALL BOARD CONTROL JOINT IN STC 50 PARTITION.
12. CELL PHONE LOCKER, 37"W X 66.5"H, FREESTANDING UNIT IS MOUNTED TO WALL. COORDINATE BLOCKING.
13. PLUMBING WALL ACCESS, REFER: PLUMBING.
14. UNDERCUT DOOR 1/2" FOR AIR TRANSFER.
15. (2) 2" PVC CONDUITS CUT TO 6" AFF. ROUTE UNDER CONCRETE OR THROUGH SUB-FLOOR IN ADJACENT SPACES. PROVIDE 1HR U.L. RATED PENETRATIONS. REFER TO STRUCTURAL DETAILS A2/SB502, C2/SB502, AND D5/SB502.
16. REFER A5/AE102 FOR SPLASH BLOCK DETAIL.

LEGEND

AREA 1

24" X 24" CONCRETE FILLED METAL PAN ACCESS FLOOR TILE SYSTEM AT RECESSED CONCRETE FLOOR AND TIERED FLOORING SYSTEM INCLUDING STEPS IN MOC #114

ATKINS BLACK & VEATCH FSB JOINT VENTURE
5801 Broadway Extension, Suite 500
Oklahoma City, OK 73118-7436
405.840.2931 | fsb-ae.com

STATE OF OKLAHOMA — JASON T. HOLUBY 5468 — LICENSED PROFESSIONAL ENGINEER — 11/5/2025

177th FIGHTER WING

NEW JERSEY ANG - 177th FW
F-16 Mission Training Center (MTC)
Atlantic City ANG Base
Egg Harbor Township, New Jersey

REVISION HISTORY:

2	ADDENDUM NO.3	11-05-2025
1	ADDENDUM NO.2	07-22-2025
△	DESCRIPTION	DATE

PROJECT INFORMATION:

DESIGNED BY:	NXL
DRAWN BY:	NXL
REVIEWED BY:	BKG
PROJECT MANAGER:	FDN

PROJECT NUMBER: 2022-130-00

SHEET TITLE: FLOOR PLANS

ISSUE DATE: NOVEMBER 5, 2025

SHEET NUMBER: AE101

11/3/2025 9:34:40 AM
C:\Users\nfd\Documents\22130\00_Arch_nfd@bb-ae.com.rvt

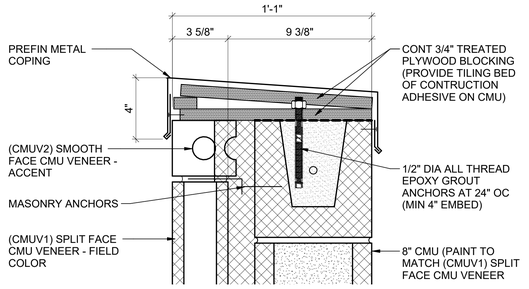

D1 SECTION DETAIL (OLI #5)
SCALE: 3" = 1'-0"

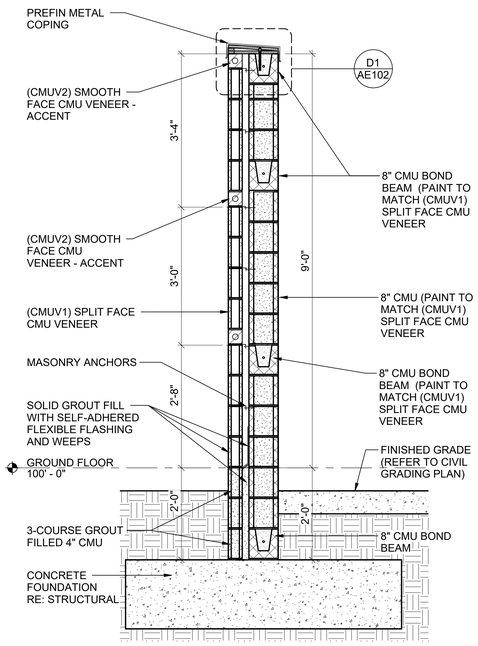

C2 SCREEN WALL SECTION (OLI #5)
SCALE: 3/4" = 1'-0"

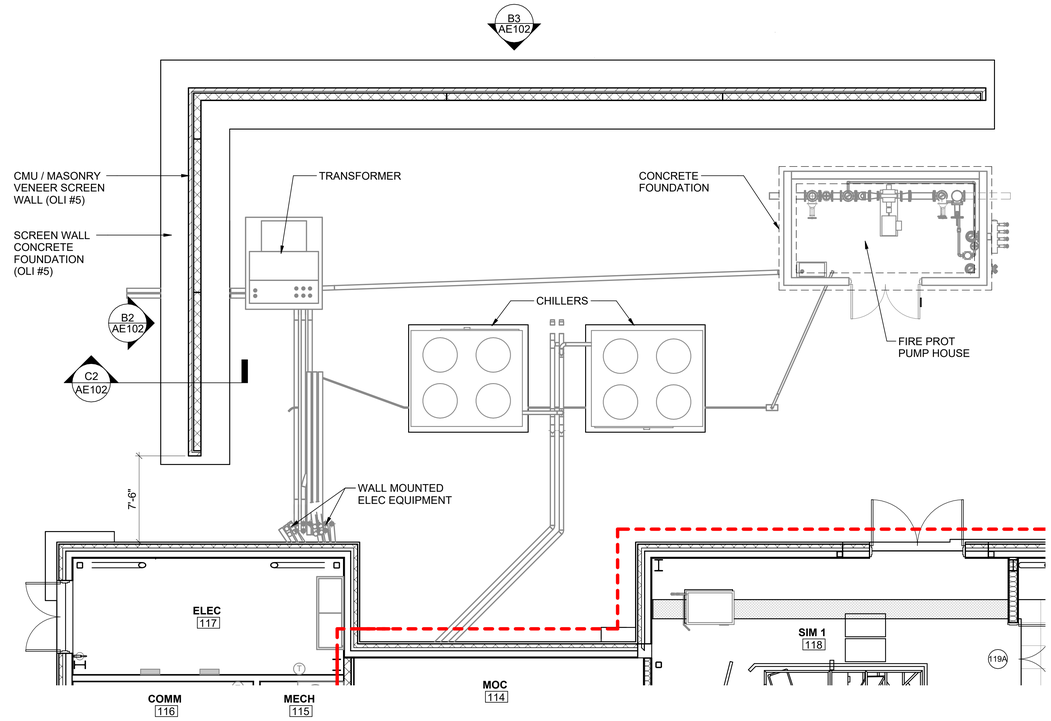

C3 MECHANICAL YARD SCREEN WALL (OLI #5)
SCALE: 3/16" = 1'-0"

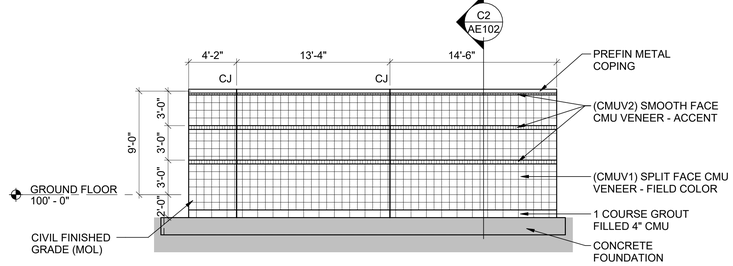

B2 SOUTH MECH SCREEN WALL ELEVATION (OLI #5)
SCALE: 3/16" = 1'-0"

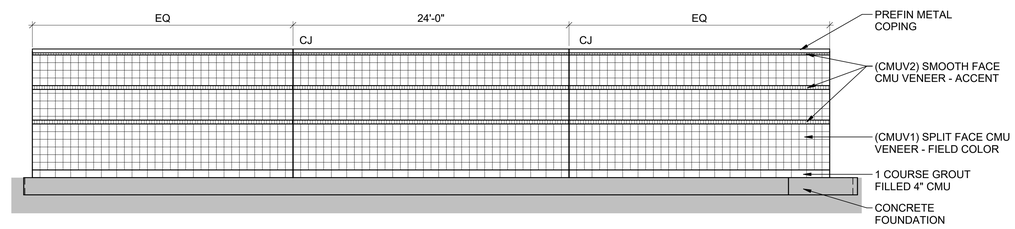

B3 WEST MECH SCREEN WALL ELEVATION (OLI #5)
SCALE: 3/16" = 1'-0"

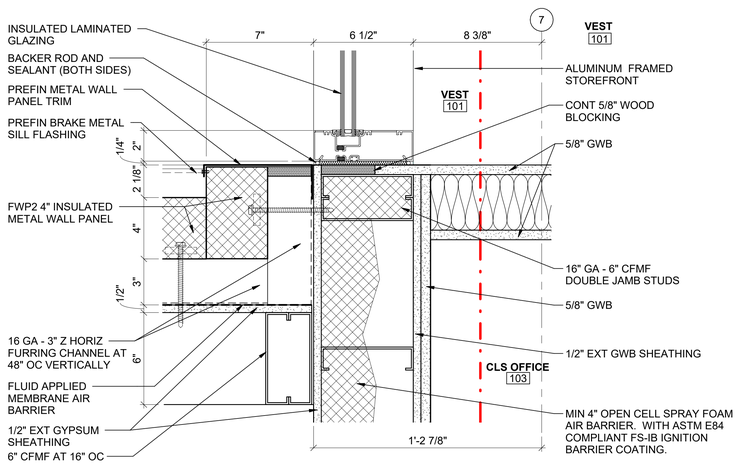

A1 JAMB DETAIL
SCALE: 3" = 1'-0"

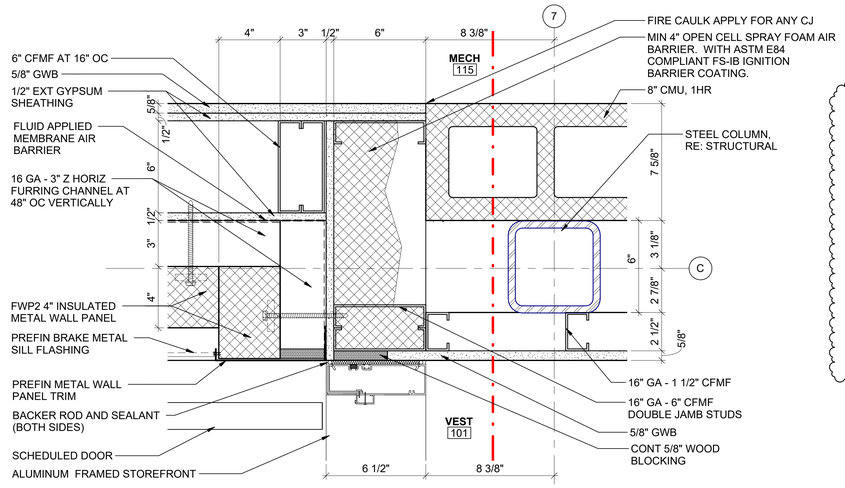

A3 JAMB DETAIL
SCALE: 3" = 1'-0"

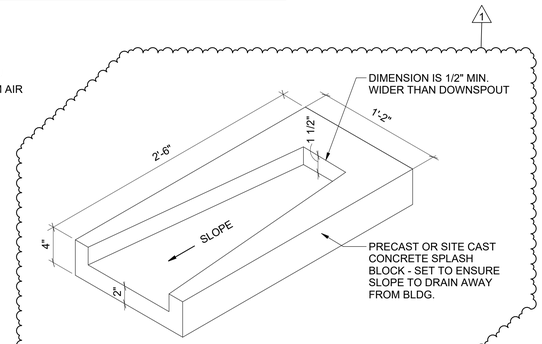

A5 SPLASH BLOCK DETAIL
SCALE: 1 1/2" = 1'-0"

N PLAN
N TRUE

0 3" 6" 9"
3" = 1'-0"
0 1' 2' 3'
3/4" = 1'-0"
0 4' 8' 12'
3/16" = 1'-0"

ATKINS BLACK & VEATCH FSB JOINT VENTURE
5801 Broadway Extension, Suite 500
Oklahoma City, OK 73118-7436
405.840.2931 | fsb-ae.com

STATE OF OKLAHOMA
JASON T. HOLUBY
5468
LICENSED PROFESSIONAL ENGINEER
11/5/2025

177th FIGHTER WING

NEW JERSEY ANG - 177th FW
F-16 Mission Training Center (MTC)
Atlantic City ANG Base
Egg Harbor Township, New Jersey

REVISION HISTORY:

1	ADDENDUM NO.3	11-05-2025
△	DESCRIPTION	DATE

PROJECT INFORMATION:

DESIGNED BY:	NXL
DRAWN BY:	NXL
REVIEWED BY:	BKG
PROJECT MANAGER:	FDN
PROJECT NUMBER:	2022-130-00

SHEET TITLE:
MECHANICAL YARD SCREEN WALL PLAN AND DETAILS

ISSUE DATE:
NOVEMBER 5, 2025

SHEET NUMBER:
AE102

11/4/2025 11:07:00 AM
C:\Users\hlu\Documents\21000_Arch_Hlu@fsb-ae.com.rvt

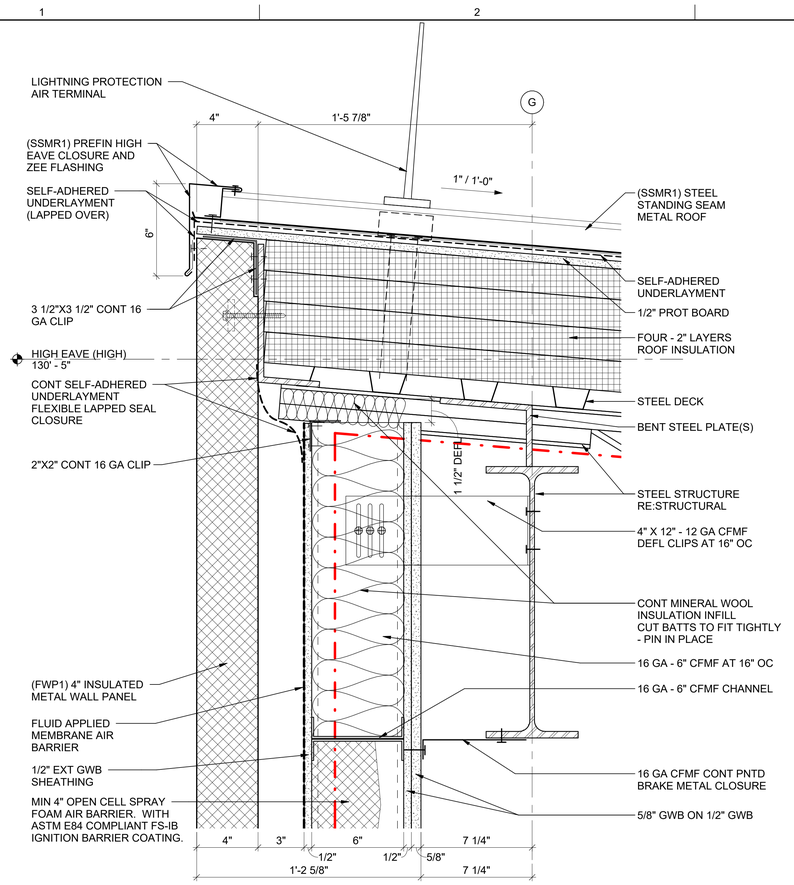

C1 HIGH EAVE (HIGH) DETAIL
SCALE: 3" = 1'-0"

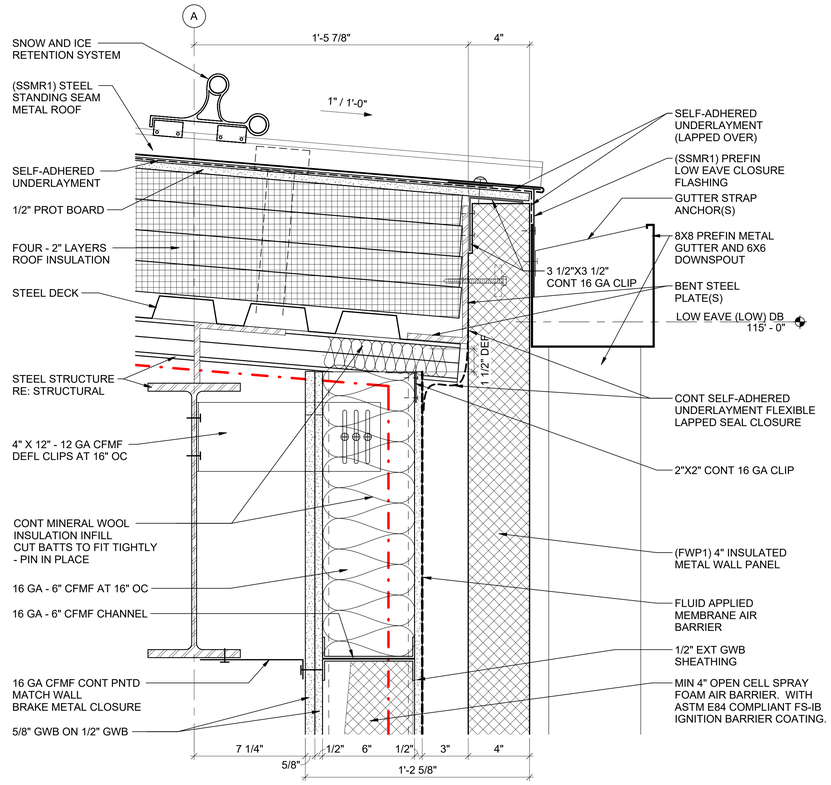

C3 LOW EAVE (LOW) DETAIL
SCALE: 3" = 1'-0"

LEGEND

GRAPHIC VISUAL PLANE OF CONT AIR BARRIER WHERE SHOWN ALL SHEETS

AREA 1 - WALL GENERAL NOTES

1. INSTALL SECOND LAYER GYPSUM WALL BOARD (JOINTS STAGGERED FROM THE FIRST LAYERS JOINTS) WITH THE PAPER FACE EXPOSED FOR TRADITIONAL BED, TAPING AND SCHEDULED PAINT FINISH.

2. ALL PENETRATIONS THROUGH EXTERIOR STUD WALL CONSTRUCTION MUST BE PROPERLY FIRE-SEALED TO MAINTAIN ENCAPSULATION OF SPRAY-FOAM INSULATION.

3.COMPLY WITH ALL REQUIREMENTS FOR PENETRATIONS AT INSULATED METAL PANEL WITH INSULATED METAL PANEL MFR.

REFER TO SHEET G-003 FOR "AREA 1" PERIMETER WALL.

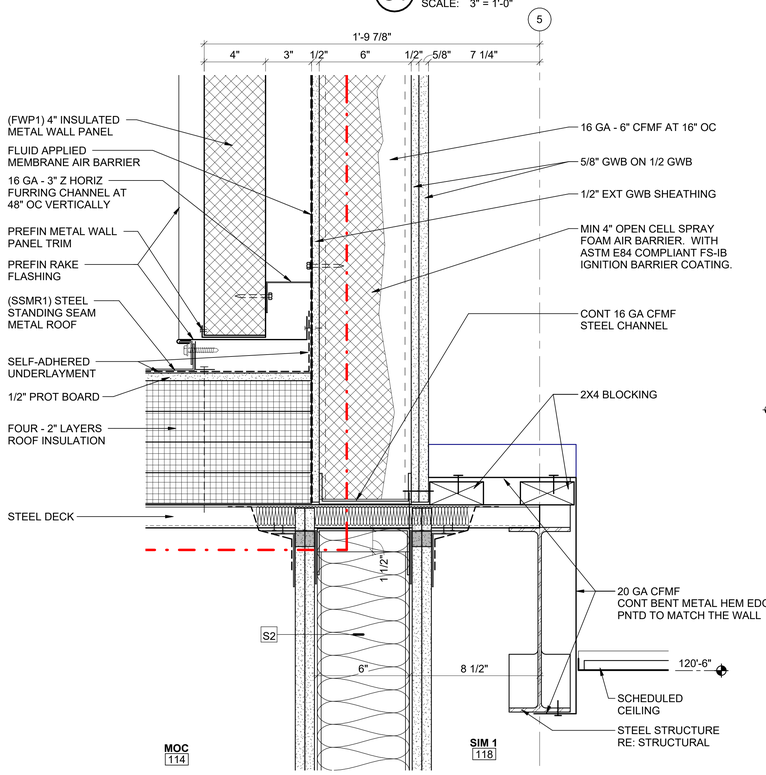

A1 HIGH/LOW ROOF DETAIL
SCALE: 3" = 1'-0"

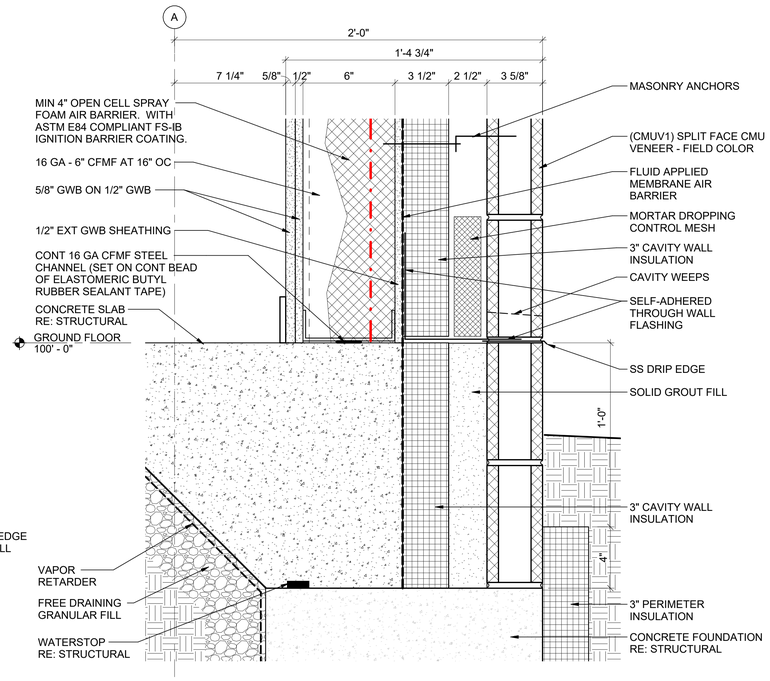

A3 BASE OF WALL/FOUNDATION DETAIL
SCALE: 3" = 1'-0"

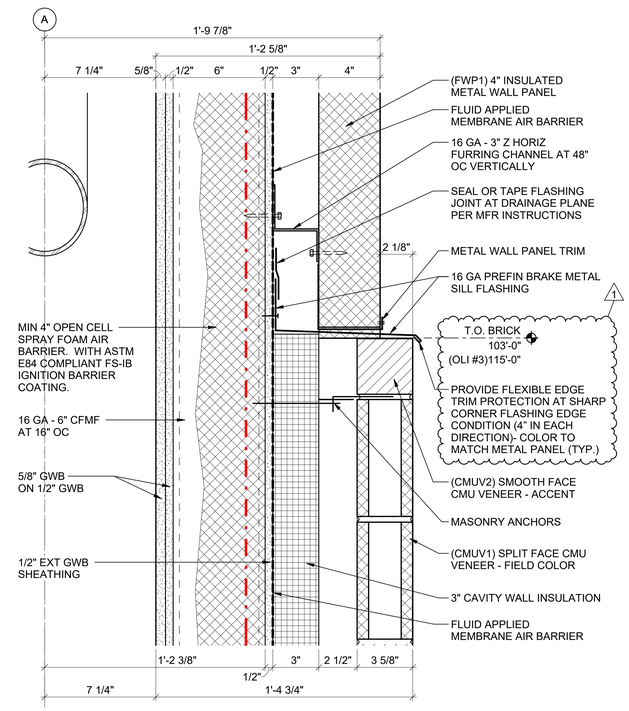

A4 EXTERIOR WALL TRANSITION DETAIL
SCALE: 3" = 1'-0"

0 3" 6" 9"
3" = 1'-0"

ATKINS BLACK & VEATCH FSB JOINT VENTURE
5801 Broadway Extension, Suite 500
Oklahoma City, OK 73118-7436
405.840.2931 | fsb-ae.com

STATE OF OKLAHOMA
JASON T. HOLUBY
5468
LICENSED PROFESSIONAL ENGINEER
11/5/2025

177th FIGHTER WING

NEW JERSEY ANG - 177th FW
F-16 Mission Training Center (MTC)
Atlantic City ANG Base
Egg Harbor Township, New Jersey

REVISION HISTORY:

1	ADDENDUM NO.3	11-05-2025
△	DESCRIPTION	DATE

PROJECT INFORMATION:

DESIGNED BY:	NXL
DRAWN BY:	NXL
REVIEWED BY:	BKG
PROJECT MANAGER:	FDN

PROJECT NUMBER: 2022-130-00

SHEET TITLE: **SECTION DETAILS**

ISSUE DATE: NOVEMBER 5, 2025

SHEET NUMBER: AE501

10/30/2025 3:15:44 PM
C:\Users\hd\Documents\21000_Arch_rtlis@fsb-ae.com.rvt

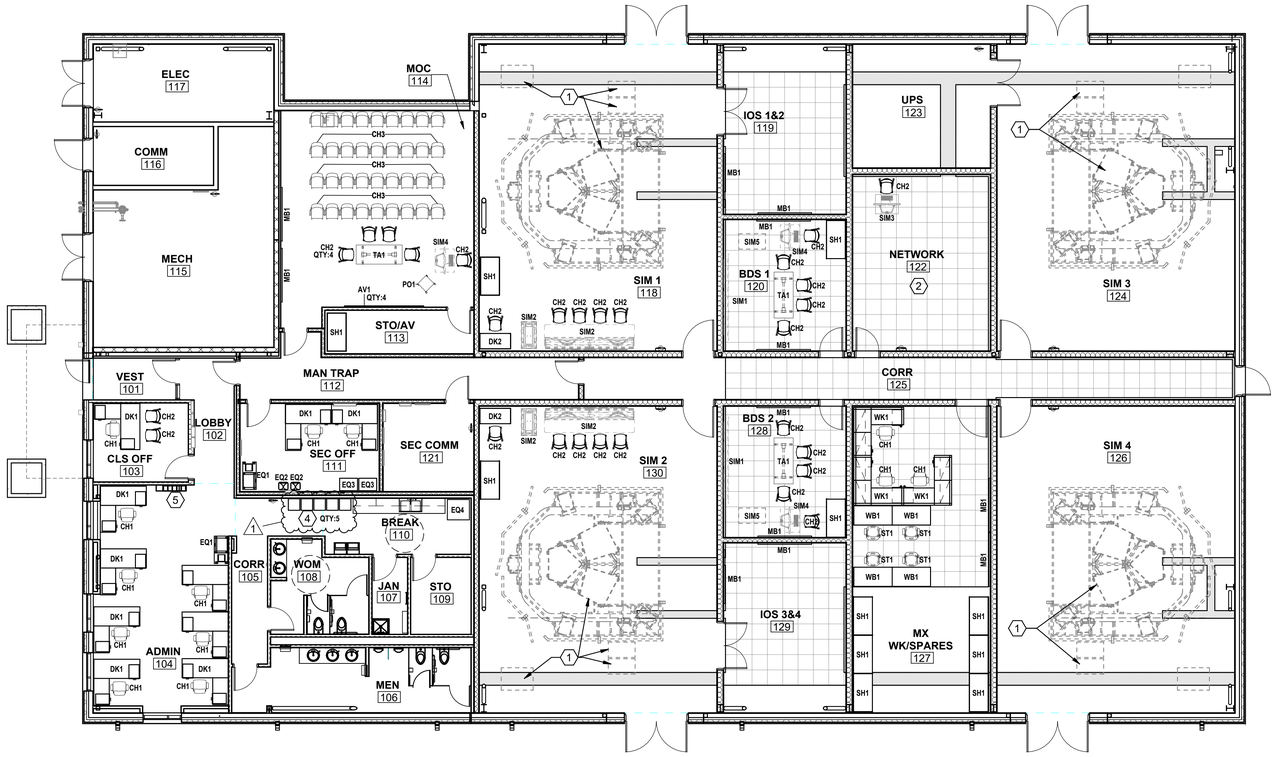

B2 FURNITURE & EQUIPMENT PLAN

SCALE: 1/8" = 1'-0"

GENERAL NOTES

A. FURNITURE IS NOT IN CONTRACT AND IS SHOWN FOR COORDINATION PURPOSES ONLY.
B. CONTRACTOR TO COORDINATE THE LOCATION OF POWER AND DATA FOR FURNITURE, EQUIPMENT, & FURNITURE SYSTEMS WITH PROVIDER. REFER TO ELECTRICAL DRAWINGS FOR POWER AND DATA LOCATIONS AND INFORMATION.
C. CONTRACTOR SHALL CONNECT WORKSTATION WHIPS FOR THE FINAL SYSTEMS FURNITURE CONNECTION. WHIP PROVIDED BY OTHERS.
D. FLIGHT SIMULATOR EQUIPMENT & SIMULATOR CONTROL STATIONS, NIC. COORDINATE WITH VENDOR FOR FINAL LOCATIONS AND ELECTRICAL, MECHANICAL, AND/OR PLUMBING REQUIREMENTS.
E. PROVIDE BLOCKING IN THE WALL FOR WALL MOUNTED FIXTURES, MARKER BOARDS, ETC. CONTRACTOR TO COORDINATE MOUNTING HEIGHTS FOR FIXTURES WITH GOVERNMENT.

SHEET KEYNOTES

1. FLIGHT SIMULATOR AND ASSOCIATED EQUIPMENT, PROVIDED BY OTHER.
2. REFER TO ELECTRICAL DRAWINGS FOR NETWORK EQUIPMENT & DETAILS.
3. MECHANICAL EQUIPMENT.
4. RECYCLE BINS, CFCI. PROVIDE (5) 40 GALLON RECYCLE BINS. UNIT TO BE CONSTRUCTED OF STEEL WITH POWDERCOAT FINISH OR STAINLESS STEEL WITH AN INTERNAL RIGID LINER. EACH CONTAINER SHALL HAVE RECYCLING SIGNAGE FOR PAPER, PLASTIC, CANS, GLASS, AND LANDFILL. FINISH TO BE GRAY.
5. CELL PHONE LOCKER, CFCI.

FURNITURE SCHEDULE (N.I.C.)

CODE	DESCRIPTION	QTY
CH1	TASK CHAIR	13
CH2	MULTI-USE CHAIR	28
CH3	MULTI-USE CHAIR	36
DK1	DESK, 6' X 6'	10
DK2	DESK, 2' X 4'	2
EQ1	COPY, FAX, PRINTER	2
EQ2	SHREDDER	2
EQ3	SAFE	2
EQ4	REFRIGERATOR W/ ICE MAKER	1
MB1	MARKER BOARD, 48" X 84"	12
PO1	PODIUM	1
SH1	SHELVING STORAGE	11
ST1	TASK STOOL	4
TA1	TABLE, TRAINING, 30" X 72"	3
WB1	WORKBENCH, 30" X 60"	4
WK1	WORKSTATION, 6' x 6'	3

SIMULATOR & TRAINING EQUIPMENT SCHEDULE (N.I.C.)

CODE	DESCRIPTION	QTY
AV1	70" AV MONITOR	4
SIM1	WALL-MOUNTED DISPLAY STRUCTURE W/ 5 DISPLAYS	2
SIM2	SIM CONSOLE	2
SIM3	NETWORK CONSOLE STATION	1
SIM4	MOC CONSOLE STATION	3
SIM5	MTC BDS COMPUTER/PERIPHERAL EQUIPMENT CABINET	2

N PLAN
N TRUE
0 4' 8' 16'
1/8" = 1'-0"

ATKINS BLACK & VEATCH FSB JOINT VENTURE
5801 Broadway Extension, Suite 500
Oklahoma City, OK 73118-7436
405.840.2931 | fsb-ae.com

STATE OF OKLAHOMA
JASON T. HOLUBY
5468
LICENSED PROFESSIONAL ENGINEER
11/5/2025

177th FIGHTER WING

NEW JERSEY ANG - 177th FW
F-16 Mission Training Center (MTC)
Atlantic City ANG Base
Egg Harbor Township, New Jersey

REVISION HISTORY:

1	ADDENDUM NO.3	11-05-2025
△	DESCRIPTION	DATE

PROJECT INFORMATION:

DESIGNED BY:	TDB
DRAWN BY:	SNG
REVIEWED BY:	JMI
PROJECT MANAGER:	FDN

PROJECT NUMBER: 2022-130-00

SHEET TITLE: FURNITURE & EQUIPMENT PLAN

ISSUE DATE: NOVEMBER 5, 2025

SHEET NUMBER: IF101

10/30/2025 3:15:47 PM
C:\Users\hlu\Documents\210000_Arch_nlu@fsb-ae.com.rvt

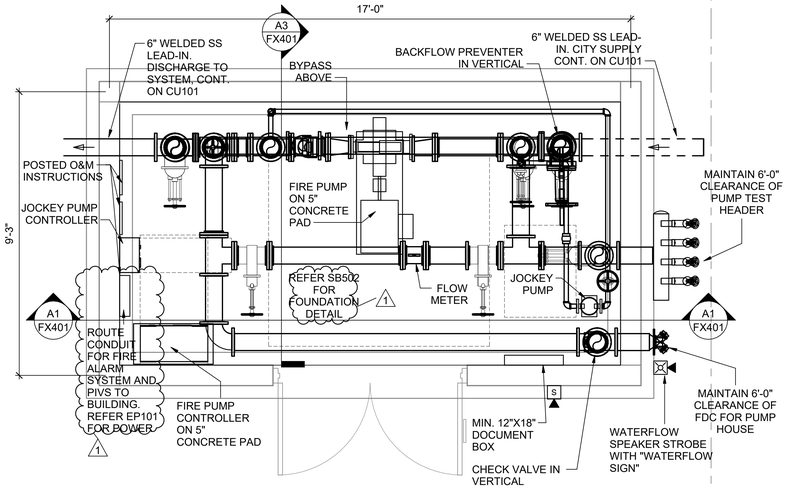

C1 FIRE PUMP ENCLOSURE ENLARGED PLAN
SCALE: 1/2" = 1'-0"

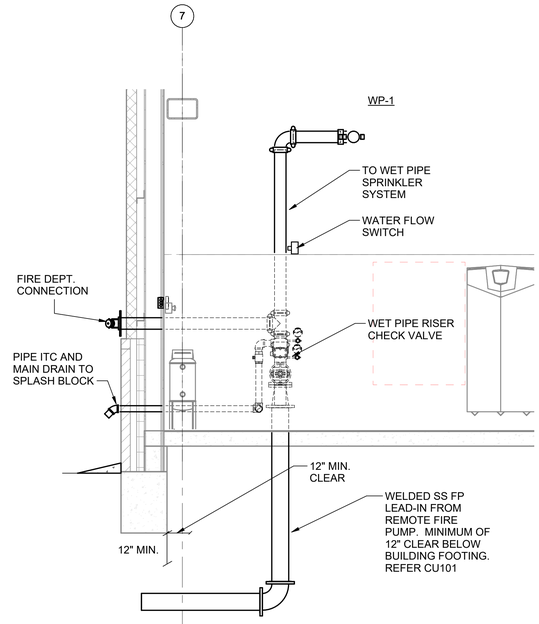

C3 FIRE PROTECTION RISER SECTION
SCALE: 1/2" = 1'-0"

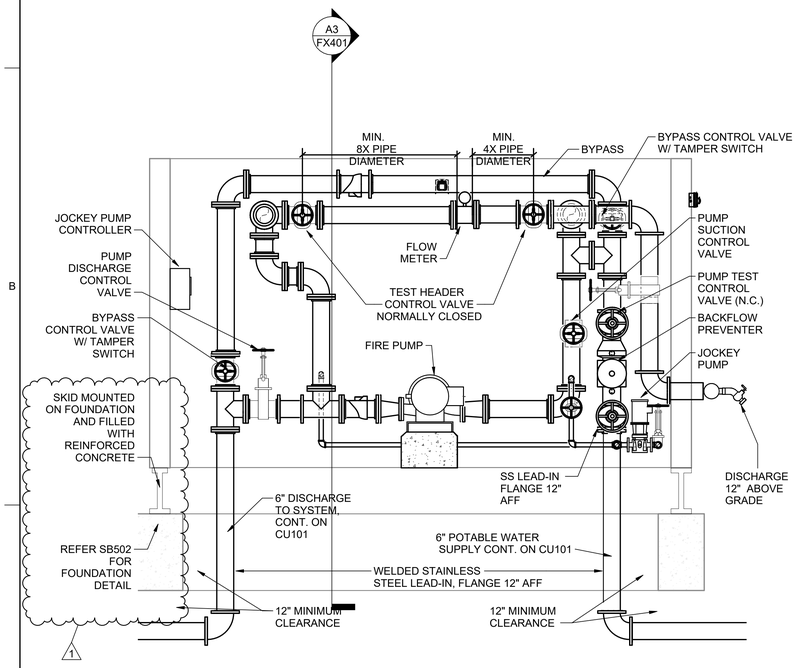

A1 FIRE PUMP SECTION
SCALE: 1/2" = 1'-0"

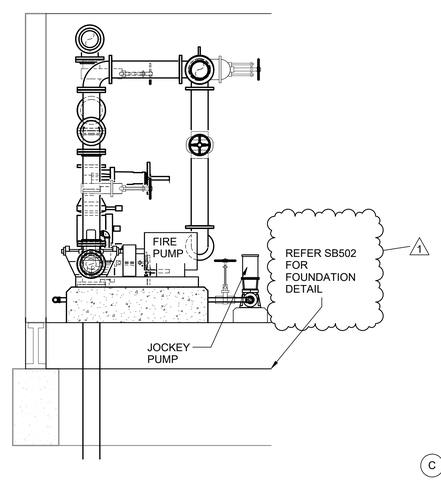

A3 SECTION LOOKING NORTH
SCALE: 1/2" = 1'-0"

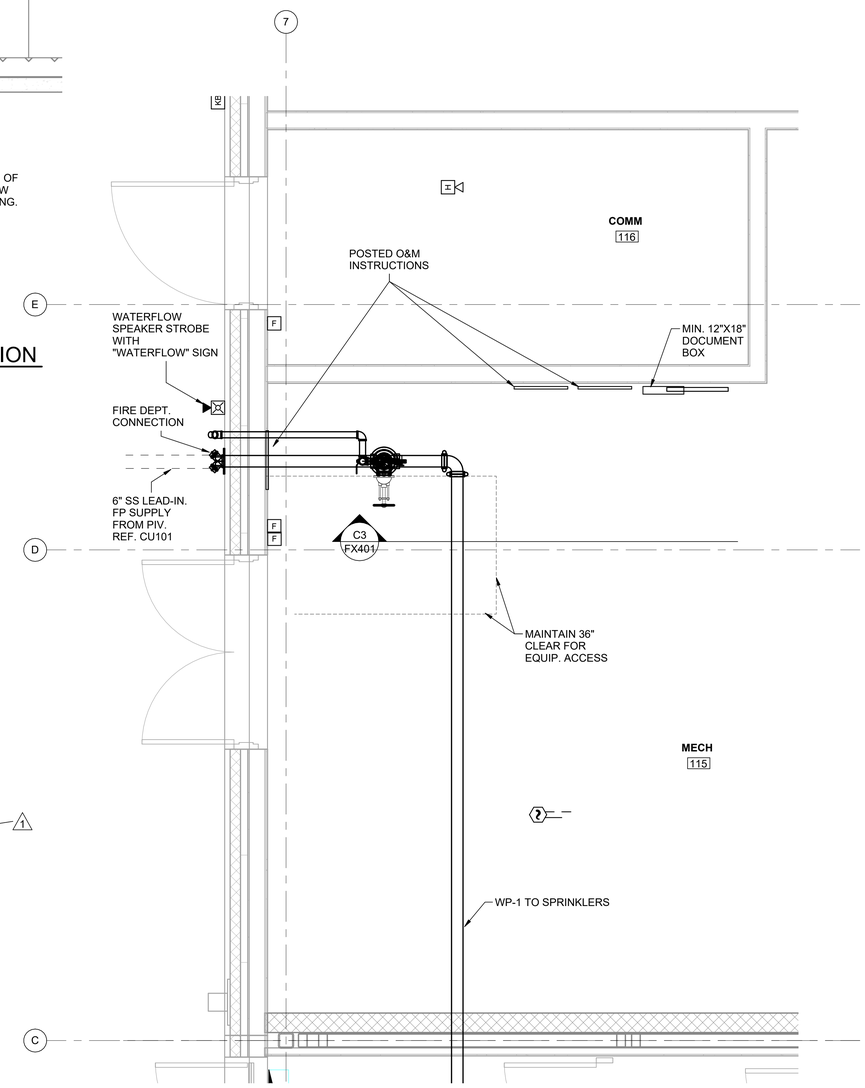

A4 ENLARGED MECH ROOM PLAN
SCALE: 1/2" = 1'-0"

0 1' 2' 4'
1/2" = 1'-0"

ATKINS BLACK & VEATCH FSB JOINT VENTURE
5801 Broadway Extension, Suite 500
Oklahoma City, OK 73118-7436
405.840.2931 | fsb-ae.com

LICENSED PROFESSIONAL ENGINEER LIANE R. FRANK OZMUN 15515 OKLAHOMA 11/05/2025

177th FIGHTER WING

NEW JERSEY ANG - 177th FW
F-16 Mission Training Center (MTC)
Atlantic City ANG Base
Egg Harbor Township, New Jersey

REVISION HISTORY:

1	ADDENDUM NO.3	11-05-2025
△	DESCRIPTION	DATE

PROJECT INFORMATION:

DESIGNED BY:	MLG
DRAWN BY:	MLG
REVIEWED BY:	LFO
PROJECT MANAGER:	FDN

PROJECT NUMBER: 2022-130-00

SHEET TITLE: FIRE PROTECTION ENLARGED PLANS AND SECTIONS

ISSUE DATE: NOVEMBER 5, 2025

SHEET NUMBER: FX401

10/30/2025 4:57:38 PM
C:\Users\MCGRIDLEY\OneDrive - FSB\Attachments + Engineers\Documents\2130000_FP_mgridley.rvt

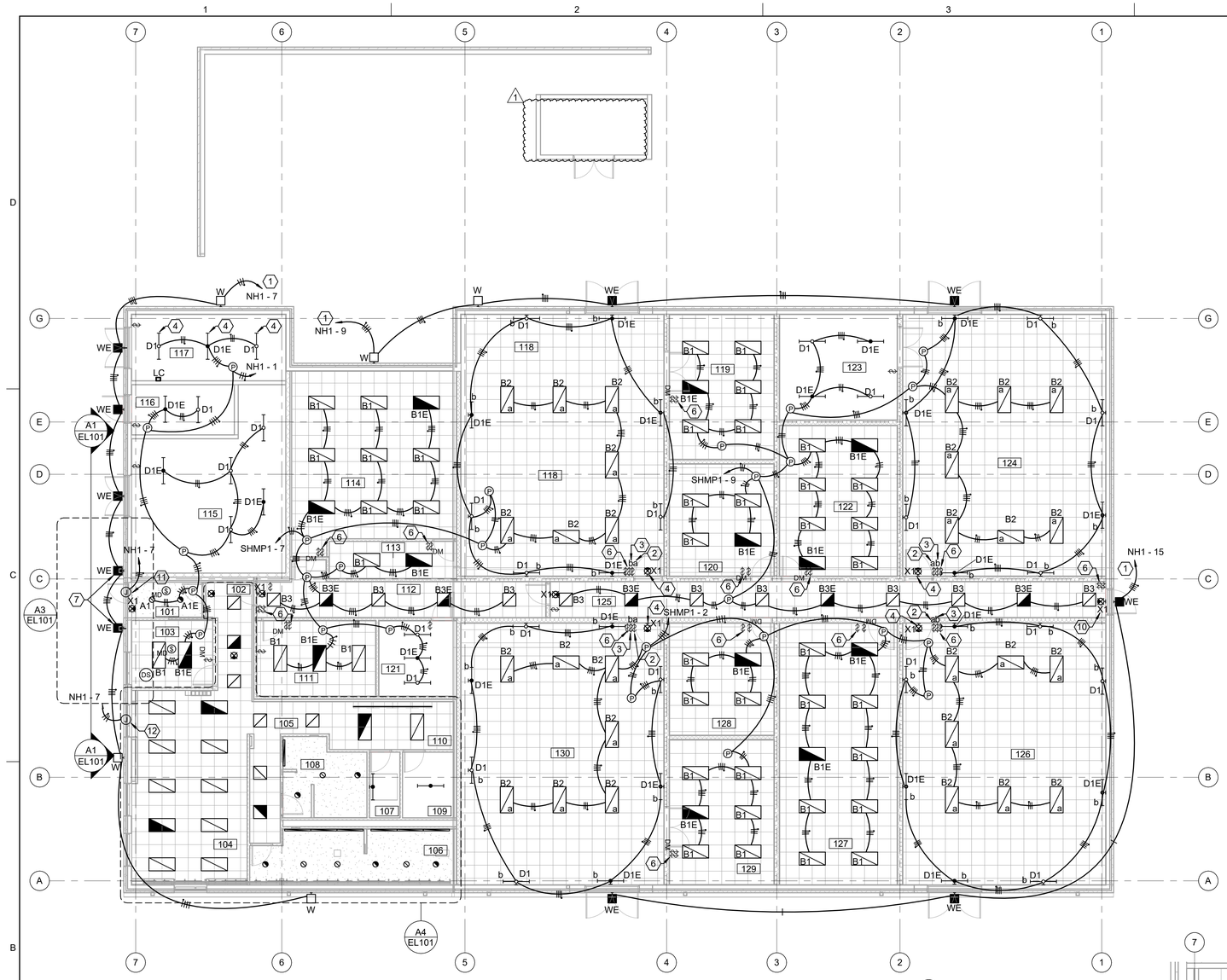

B1 ELECTRICAL INTERIOR LIGHTING
SCALE: 1/8" = 1'-0"

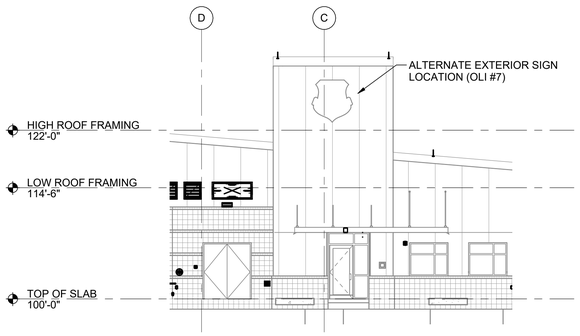

A1 ENTRY LIGHTING PLAN (OLI#7) - SIGN LOCATION
SCALE: 1/8" = 1'-0"

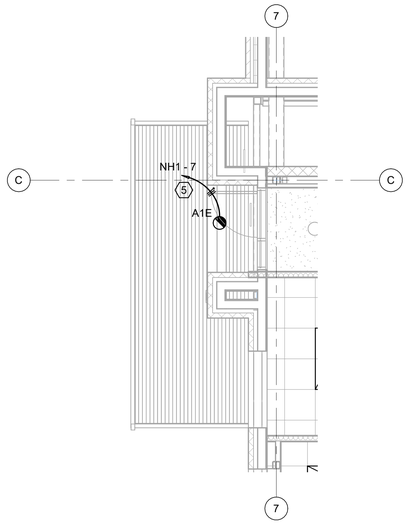

A3 ENTRY LIGHTING PLAN (OLI#4)
SCALE: 1/4" = 1'-0"

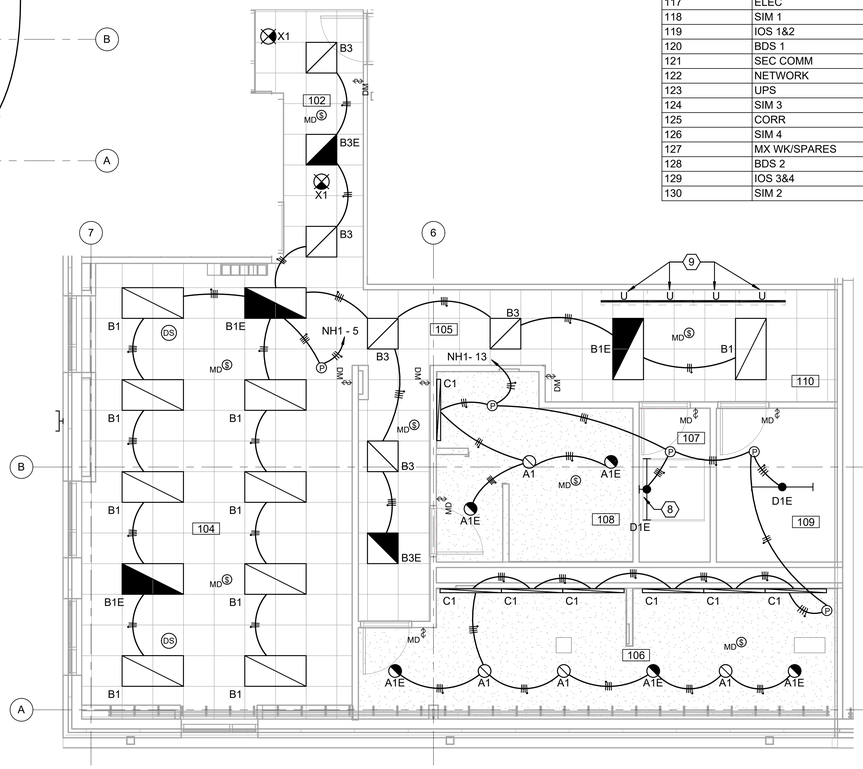

A4 ENLARGED LIGHTING PLAN - 102, 104, 105, 106, 107, 108, 109, 110
SCALE: 1/4" = 1'-0"

GENERAL NOTES

A. POWER TYPE X1 LIGHT FIXTURES LOCATED IN SECURE AREAS TO SECURE LIGHTING AND MECHANICAL PANEL, SHMP1.
B. POWER TYPE X1 LIGHT FIXTURES LOCATED IN NON-SECURE AREAS TO NORMAL LIGHTING AND MECHANICAL PANEL, NHMP1.
C. CONDUIT FOR EXTERIOR LIGHT FIXTURES SHALL BE ROUTED IN EXTERIOR WALL INTERSTITIAL SPACE. REFER TO SHEETS EP104, EP105, AND EP106.
D. ALL LIGHT FIXTURE TRIM PIECES LOCATED IN SIM BAYS SHALL BE BLACK IN COLOR.
E. ALL LIGHTING CONTROL DEVICES AND FACEPLATES LOCATED IN SIM BAYS SHALL BE BLACK IN COLOR.
F. FOR LIGHT FIXTURE TYPES D1 AND D1E IN SIM BAYS, MOUNT FIXTURES TO WALL 10'-0" AFF.

SHEET KEYNOTES

1. CIRCUIT EXTERIOR LIGHTING THROUGH LIGHTING CONTACTOR, LC. REFER TO SHEET EL600/DETAIL C3 FOR CONTROL DIAGRAM.
2. LIGHT FIXTURES IN THIS ROOM WITH LABEL "a" SHALL BE CONTROLLED BY DIMMABLE SWITCH WITH LABEL 'a'.
3. LIGHT FIXTURES IN THIS ROOM WITH LABEL "b" SHALL BE CONTROLLED BY TOGGLE SWITCH WITH ABEL ".
4. LED TYPE EXIT LIGHTS IN SIM ROOMS WILL ONLY OPERATE UPON LOSS OF POWER, ACTIVATION OF FIRE ALARM, OR ACTIVATION OF EMERGENCY POWER SWITCH FOR THE BAY. CONTRACTOR TO PROVIDE NECESSARY RELAYS, CONNECTIONS, AND MANUFACTURER RECOMMENDED CONTROL AND POWER CABLING/CONDUIT TO ENSURE LED TYPE EXIT LIGHTS OPERATE AS NOTED ABOVE. COORDINATE THESE CONNECTIONS WITH THE FIRE ALARM SYSTEM CONTRACTOR.
5. CIRCUIT THIS LIGHT FIXTURE TO INDICATED CIRCUIT THROUGH LIGHTING CONTACTOR LC IF OLI#4 IS ACCEPTED.
6. PROVIDE LIGHT SWITCH WITH INTEGRATED TIMER TO CONTROL ABOVE CEILING LIGHT FIXTURES. REFER TO SHEET EL103 FOR LIGHT FIXTURE LOCATIONS.
7. LIGHT FIXTURE IS FOR BASE BID ONLY. MOUNT LIGHT FIXTURE 7' 0" AFG.
8. MOUNT LIGHT FIXTURE TO WALL 8' 0" AFF.
9. UNDERCABINET LED LIGHTS, FIXTURE TYPE U. COORDINATE WITH MILLWORK PROVIDER FOR EXACT INSTALLATION DETAILS. FIXTURE SHALL BE POWERED FROM SWITCHED RECEPTACLE LOCATED IN MILLWORK.
10. MOUNT LIGHT FIXTURE AT 8' 0" AFF.
11. PROVIDE 120V POWER FOR ILLUMINATED EXTERIOR SIGNAGE. CIRCUIT THROUGH LIGHTING CONTACTOR LC IF OLI #7 IS ACCEPTED.
12. PROVIDE 120V POWER FOR ILLUMINATED EXTERIOR SIGNAGE. CIRCUIT THROUGH LIGHTING CONTACTOR LC IF BASE BID OR OLI#4 IS ACCEPTED.

ROOM SCHEDULE

ROOM NUMBER	ROOM NAME
101	VEST
102	LOBBY
103	CLS OFF
104	ADMIN
105	CORR
106	MEN
107	JAN
108	WOM
109	STO
110	BREAK
111	SEC OFF
112	MAN TRAP
113	STO/AV
114	MOC
115	MECH
116	COMM
117	ELEC
118	SIM 1
119	IOS 1&2
120	BDS 1
121	SEC COMM
122	NETWORK
123	UPS
124	SIM 3
125	CORR
126	SIM 4
127	MX WK/SPARES
128	BDS 2
129	IOS 3&4
130	SIM 2

ATKINS BLACK & VEATCH FSB JOINT VENTURE
5801 Broadway Extension, Suite 500
Oklahoma City, OK 73118-7436
405.840.2931 | fsb-ae.com

LICENSED PROFESSIONAL ENGINEER Marcus A. Prater 30821 OKLAHOMA

177th FIGHTER WING

NEW JERSEY ANG - 177th FW
F-16 Mission Training Center (MTC)
Atlantic City ANG Base
Egg Harbor Township, New Jersey

REVISION HISTORY:

1	ADDENDUM NO. 3	11-05-2025
	DESCRIPTION	DATE

PROJECT INFORMATION:

DESIGNED BY:	RGD
DRAWN BY:	RGD
REVIEWED BY:	JTL
PROJECT MANAGER:	FDN
PROJECT NUMBER:	2022-130-00
SHEET TITLE:	ELECTRICAL INTERIOR LIGHTING
ISSUE DATE:	MAY 15, 2025
SHEET NUMBER:	EL101

10/28/2025 8:55:58 AM
C:\Users\mapr0\OneDrive - FSB Architects + Engineers\Documents\2-13000_Elec_mprater.1.rvt

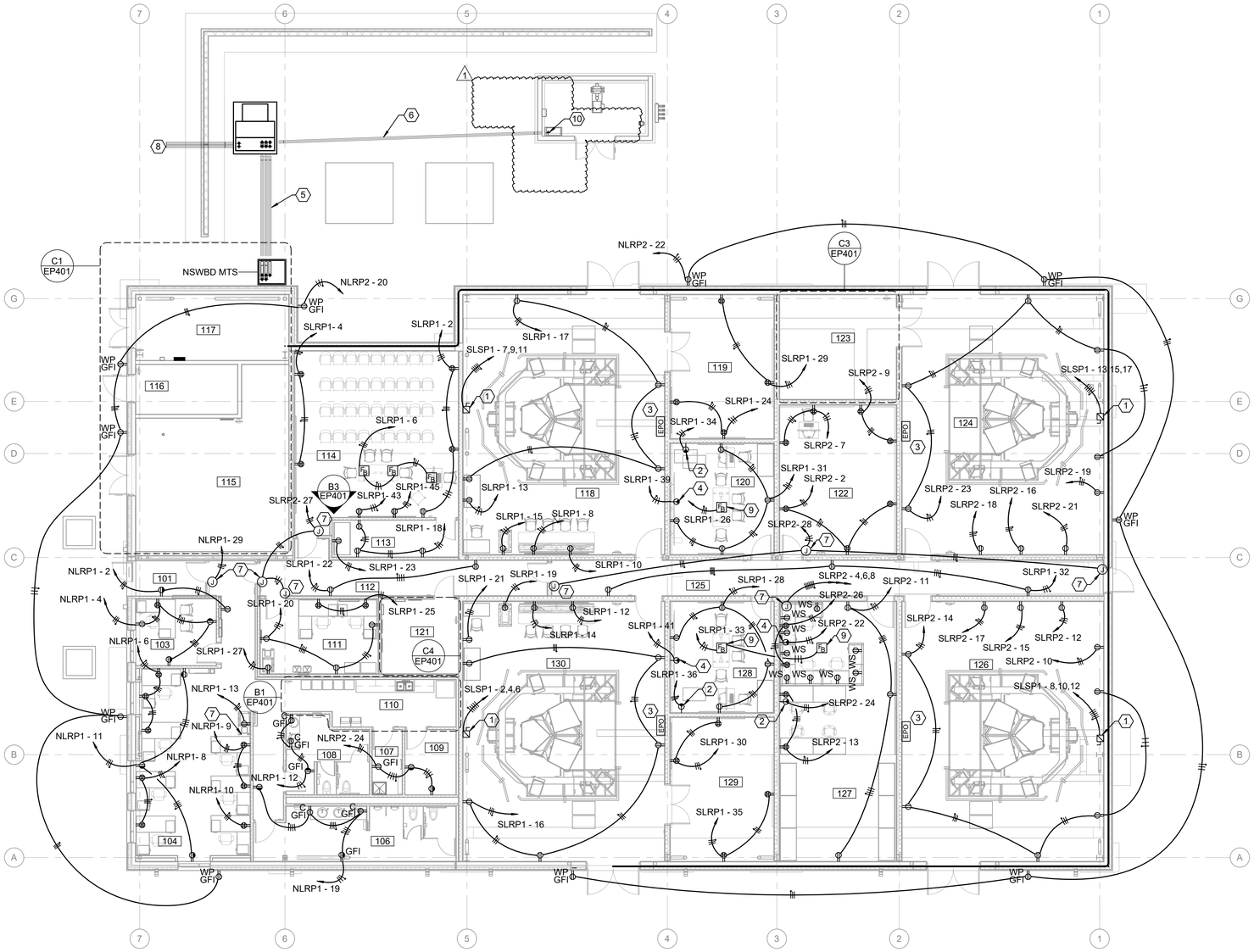

B2 GROUND FLOOR ELECTRICAL POWER PLAN

SCALE: 1/8" = 1'-0"

GENERAL NOTES

A. ALL FLOOR BOXES SHALL HAVE SIX GANGS. FLOOR BOXES SHALL BE EQUIPPED WITH (2) GFI DUPLEX RECEPTACLES, (2) GANGS DEDICATED FOR TELECOMM CONNECTIONS. (2) GANGS SHALL BE BLANK.

B. ALL UNDERGROUND HORIZONTAL CONDUITS SHALL BE SCH 40 PVC. UNDERGROUND CONDUIT ELBOWS SHALL BE FIBERGLASS. UNDERGROUND VERTICAL STUBUPS SHALL BE PVC-COATED ERMC.

C. ALL RECEPTACLES AND COVER PLATES IN SIM BAYS SHALL BE BLACK IN COLOR.

D. RECEPTACLES WITH "WS" DESIGNATION ARE INTEGRAL TO THE SYSTEMS FURNITURE. COORDINATE LOCATION OF RECEPTACLES WITH SYSTEMS FURNITURE PROVIDER.

SHEET KEYNOTES

1. 240V, 200A/3P/F, NEMA 1 HEAVY DUTY DISCONNECT SWITCH. PROVIDE CLASS R 150A FUSES IN DISCONNECT. ROUTE (4) - #1/0, (1) - #6 EG, 1-1/2" C.
2. NEMA L5-20 RECEPTACLE. MOUNT RECEPTACLE AT 18" AFF.
3. PROVIDE ROUGH IN FOR EPO SWITCH. EPO SWITCH SHALL BE PROVIDED BY SIMULATOR INSTALLER. COORDINATE WITH SIMULATOR INSTALLER FOR FINAL LOCATION OF EPO SWITCH AND CONDUIT HOMERUNS.
4. NEMA L5-20 RECEPTACLE FOR DISPLAY WALL. COORDINATE WITH SIMULATOR PROVIDER FOR FINAL LOCATION AND HEIGHT.
5. 2X3 CONCRETE ENCASED DUCTBANK. (5) TOTAL 4" CONDUITS. (4) CONDUITS WITH (4) - #600KCMIL. (1) SPARE CONDUIT WITH PULL STRING. CAP AND SEAL SPARE CONDUIT AT EACH STUB UP.
6. CONCRETE ENCASED FEEDER FOR FIRE PUMP HOUSE. REFER TO EP600 FOR CONDUIT AND CONDUCTOR SIZES.
7. 120V CIRCUIT FOR ACCESS CONTROL POWER SUPPLY. LOCATE ON SECURE SIDE OF DOOR. LOCATE ABOVE ACCESSIBLE CEILING WHERE APPLICABLE.
8. REFER TO SHEET ES101 FOR CONTINUATION.
9. FLOORBOX COMPATIBLE WITH RAISED ACCESS FLOORING SYSTEM.
10. COORDINATE FIRE PUMP HOUSE POWER FEED CONDUIT STUB UP LOCATION WITH SUBMITTED EQUIPMENT PRIOR TO INSTALLATION.

ROOM SCHEDULE

ROOM NUMBER	ROOM NAME
101	VEST
102	LOBBY
103	CLS OFF
104	ADMIN
105	CORR
106	MEN
107	JAN
108	WOM
109	STO
110	BREAK
111	SEC OFF
112	MAN TRAP
113	STO/AV
114	MOC
115	MECH
116	COMM
117	ELEC
118	SIM 1
119	IOS 1&2
120	BDS 1
121	SEC COMM
122	NETWORK
123	UPS
124	SIM 3
125	CORR
126	SIM 4
127	MX WK/SPARES
128	BDS 2
129	IOS 3&4
130	SIM 2

N

0 4' 8' 16'
1/8" = 1'-0"

ATKINS BLACK & VEATCH FSB JOINT VENTURE
5801 Broadway Extension, Suite 500
Oklahoma City, OK 73118-7436
405.840.2931 | fsb-ae.com

LICENSED PROFESSIONAL ENGINEER
Marcus A. Prater
30821
OKLAHOMA

177th FIGHTER WING

NEW JERSEY ANG - 177th FW
F-16 Mission Training Center (MTC)
Atlantic City ANG Base
Egg Harbor Township, New Jersey

REVISION HISTORY:

1	ADDENDUM NO. 3	11-05-2025
△	DESCRIPTION	DATE

PROJECT INFORMATION:

DESIGNED BY: MAP
DRAWN BY: MAP
REVIEWED BY: JTL
PROJECT MANAGER: FDN

PROJECT NUMBER: 2022-130-00

SHEET TITLE: GROUND FLOOR ELECTRICAL POWER PLAN

ISSUE DATE: MAY 15, 2025

SHEET NUMBER: EP101

10/30/2025 8:07:28 AM
C:\Users\mapr\OneDrive - FSB Architects + Engineers\Documents\21300_Elec_mpraler1.rvt

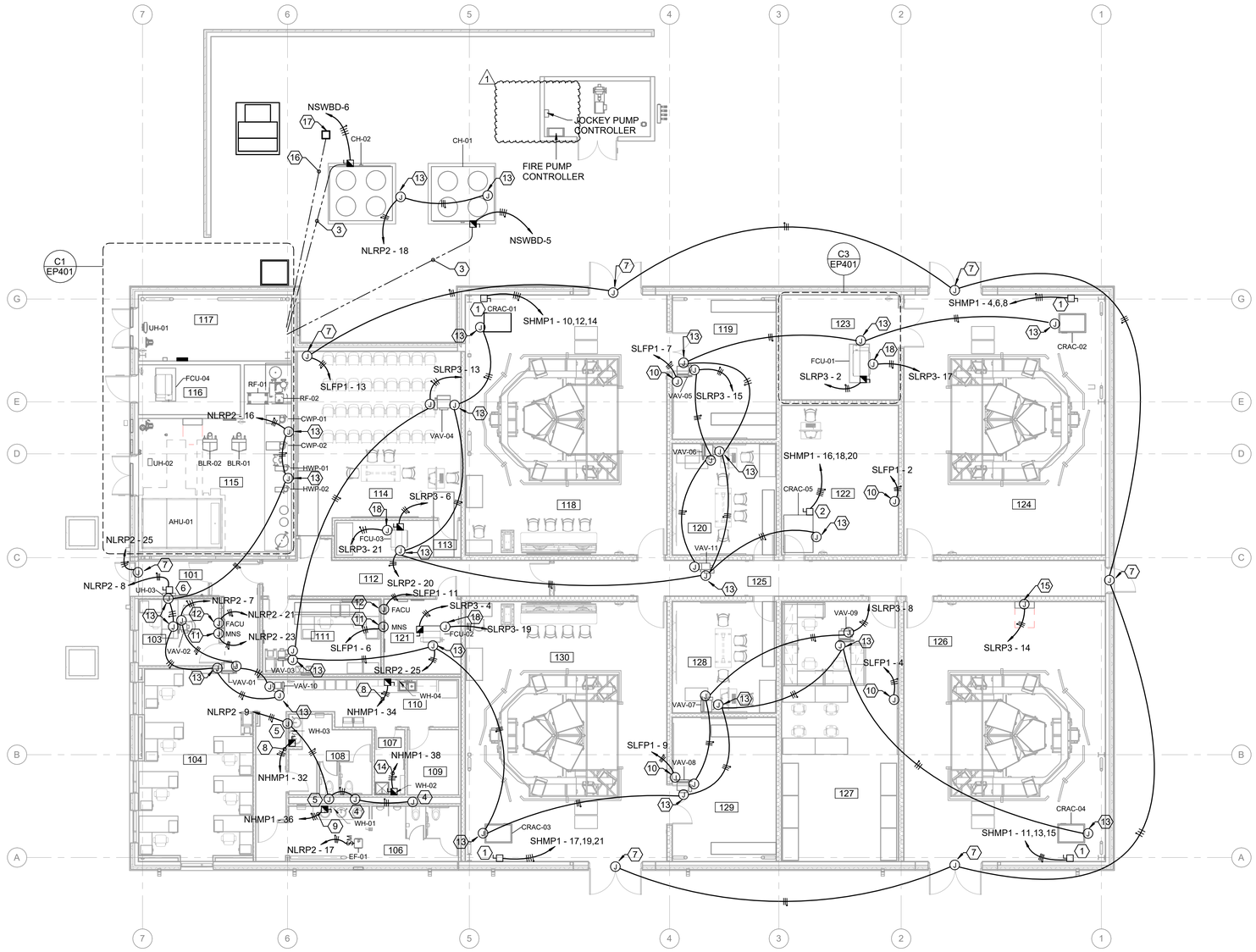

B2 GROUND FLOOR MECHANICAL POWER PLAN

SCALE: 1/8" = 1'-0"

SHEET KEYNOTES

1. 600V, 60A/3P/NF, NEMA 1 ENCLOSURE HEAVY DUTY DISCONNECT SWITCH. ROUTE (3) - #8, (1) - # 10 EG, 1"C.
2. 600V, 30A/3P/NF, NEMA 1 ENCLOSURE HEAVY DUTY DISCONNECT SWITCH. ROUTE (3) - #12, (1) - #12 EG, 3/4"C.
3. (3) - #2/0, (1) # - 4 EG, 2"C. CONDUIT SHALL BE SCH 40 PVC UNDERGROUND. PROVIDE PVC COATED ERMC FOR BOTH INTERIOR AND EXTERIOR STUBUPS. ELBOWS SHALL BE FIBERGLASS. COORDINATE ROUTING OF UNDERGROUND CONDUITS WITH CHILLED WATER LINES. MAINTAIN MINIMUM 18" SEPARATION BETWEEN ELECTRIC AND CHILLED WATER LINES.
4. HARDWIRED CONNECTION FOR TOILET SENSORS. CONNECT TO AC POWER KIT PROVIDED BY MANUFACTURER.
5. HARDWIRED CONNECTION FOR SINK FAUCET SENSORS. CONNECT TO AC POWER KIT PROVIDED BY MANUFACTURER.
6. 240V, 30A/3P/NF, NEMA 1 ENCLOSURE HEAVY DUTY DISCONNECT SWITCH. ROUTE (3) - #12, (1) - #12 EG, 3/4"C.
7. PROVIDE 120V POWER FOR EMERGENCY TEXT SIGN. COORDINATE LOCATION WITH SIGNAGE INSTALLER.
8. ROUTE (2) - #8, (1) - #10 EG, 3/4"C FOR INSTANTANEOUS WATER HEATER. COORDINATE ALL REQUIREMENTS WITH EQUIPMENT PROVIDER.
9. ROUTE (2) - #4, (1) - #8 EG, 1 1/4"C FOR INSTANTANEOUS WATER HEATER. COORDINATE ALL REQUIREMENTS WITH EQUIPMENT PROVIDER.
10. PROVIDE 120V POWER FOR AIR SAMPLING SMOKE DETECTOR.
11. PROVIDE 120V POWER FOR MASS NOTIFICATION SYSTEM CONTROL UNIT.
12. PROVIDE 120V POWER FOR FIRE ALARM CONTROL UNIT.
13. PROVIDE 120V POWER FOR FLOW CONTROL VALVE. COORDINATE WITH INSTALLER FOR EXACT LOCATION.
14. ROUTE (2) - #3, (1) - #8 EG, 1 1/4"C FOR INSTANTANEOUS WATER HEATER. COORDINATE ALL REQUIREMENTS WITH EQUIPMENT PROVIDER.
15. PROVIDE 120V POWER FOR BAS PANEL.
16. 2" PVC SCH 40 CONDUIT WITH PULL STRING FOR FUTURE CHILLER. PROVIDE PVC COATED ERMC AT INTERIOR STUBUP. LOCATE STUBUP UNDERNEATH SWITCHBOARD NSWBD BRANCH SECTION. CAP AND SEAL BOTH ENDS OF CONDUIT. ELBOWS SHALL BE FIBERGLASS.
17. CONCRETE OPEN BOTTOM HANDHOLE FOR FUTURE CHILLER CONNECTION. 11"X18", 12" DEPTH. TIER 15 RATED. PROVIDE GASKETED COVER WITH "ELECTRICAL" LETTERING AND LOCKING BOLTS. COVER SHALL BE TIER 15 RATED. CONDUIT SHALL ENTER FROM BOTTOM OF HANDHOLE. REFER TO DETAIL A1/ES502.
18. PROVIDE 120V FOR CONDENSATE PUMP.

ROOM SCHEDULE

ROOM NUMBER	ROOM NAME
101	VEST
102	LOBBY
103	CLS OFF
104	ADMIN
105	CORR
106	MEN
107	JAN
108	WOM
109	STO
110	BREAK
111	SEC OFF
112	MAN TRAP
113	STO/AV
114	MOC
115	MECH
116	COMM
117	ELEC
118	SIM 1
119	IOS 1&2
120	BDS 1
121	SEC COMM
122	NETWORK
123	UPS
124	SIM 3
125	CORR
126	SIM 4
127	MX WK/SPARES
128	BDS 2
129	IOS 3&4
130	SIM 2

N

0 4' 8' 16'
1/8" = 1'-0"

ATKINS BLACK & VEATCH FSB JOINT VENTURE
5801 Broadway Extension, Suite 500
Oklahoma City, OK 73118-7436
405.840.2931 | fsb-ae.com

PROFESSIONAL ENGINEER LICENSED Marcus A. Prater 30821 OKLAHOMA

177th FIGHTER WING

NEW JERSEY ANG - 177th FW
F-16 Mission Training Center (MTC)
Atlantic City ANG Base
Egg Harbor Township, New Jersey

REVISION HISTORY:

1	ADDENDUM NO. 3	11-05-2025
△	DESCRIPTION	DATE

PROJECT INFORMATION:

DESIGNED BY: MAP
DRAWN BY: MAP
REVIEWED BY: JTL
PROJECT MANAGER: FDN

PROJECT NUMBER: 2022-130-00

SHEET TITLE: GROUND FLOOR MECHANICAL POWER PLAN

ISSUE DATE: MAY 15, 2025

SHEET NUMBER: EP102

10/28/2025 8:56:20 AM
C:\Users\mapr\OneDrive - FSB Architects + Engineers\Documents\2-13000_Elec_mpratet.1.rvt

FEEDER SCHEDULE

NO	WIRE AND CONDUIT	AMPS	NO	WIRE AND CONDUIT	AMPS
1	3-#12 & 1-#12 EG, 3/4"C	20	2	4-#12 & 1-#12 EG, 3/4"C	20
3	3-#10 & 1-#10 EG, 3/4"C	30	4	4-#10 & 1-#10 EG, 3/4"C	30
5	3-#8 & 1-#10 EG, 1"C	40	6	4-#8 & 1-#10 EG, 1"C	40
7	3-#6 & 1-#10 EG, 1"C	55	8	4-#6 & 1-#10 EG, 1"C	55
9	3-#4 & 1-#8 EG, 1 1/4"C	70	10	4-#4 & 1-#8 EG, 1 1/4"C	70
11	3-#3 & 1-#8 EG, 1 1/4"C	85	12	4-#3 & 1-#8 EG, 1 1/4"C	85
13	3-#2 & 1-#8 EG, 1 1/4"C	95	14	4-#2 & 1-#8 EG, 1 1/4"C	95
15	3-#1 & 1-#6 EG, 1 1/2"C	110	16	4-#1 & 1-#6 EG, 1 1/2"C	110
17	3-#1/0 & 1-#6 EG, 1 1/2"C	150	18	4-#1/0 & 1-#6 EG, 1 1/2"C	150
19	3-#2/0 & 1-#6 EG, 2"C	175	20	4-#2/0 & 1-#6 EG, 2"C	175
21	3-#3/0 & 1-#6 EG, 2"C	200	22	4-#3/0 & 1-#6 EG, 2"C	200
23	3-#4/0 & 1-#4 EG, 2"C	230	24	4-#4/0 & 1-#4 EG, 2 1/2"C	230
25	3-#250kcmil & 1-#4 EG, 2 1/2"C	255	26	4-#250kcmil & 1-#4 EG, 2 1/2"C	255
27	3-#300kcmil & 1-#4 EG, 2 1/2"C	285	28	4-#300kcmil & 1-#4 EG, 3"C	285
29	3-#350kcmil & 1-#3 EG, 2 1/2"C	310	30	4-#350kcmil & 1-#3 EG, 3"C	310
31	3-#400kcmil & 1-#3 EG, 2 1/2"C	335	32	4-#400kcmil & 1-#3 EG, 3"C	335
33	3-#500kcmil & 1-#3 EG, 3"C	380	34	4-#500kcmil & 1-#3 EG, 3 1/2"C	380
35	3-#600kcmil & 1-#3 EG, 3 1/2"C	420	36	4-#600kcmil & 1-#3 EG, 4"C	420

SCHEDULE NOTES :
1. RESIZE GROUND CONDUCTOR FOR PARALLEL FEEDERS AS REQUIRED PER SECTION #250-122 OF THE NEC. INCREASE SIZE OF CONDUIT AS REQUIRED FOR ADDITIONAL GROUNDING.
2. ALL AMPACITIES INDICATED ARE COPPER BASED ON TEMPERATURE RATING OF 60°C INSULATION ON CONDUCTORS #1 AND SMALLER AND 75°C INSULATION ON CONDUCTORS #1/0 AND LARGER.

SEPARATELY DERIVED SERVICE FEEDER SCHEDULE

NO	WIRE AND CONDUIT	AMPS	NO	WIRE AND CONDUIT	AMPS
37	3-#12 & 1-#8 EG, 3/4"C	20	38	4-#12 & 1-#8 EG, 3/4"C	20
39	3-#10 & 1-#8 EG, 3/4"C	30	40	4-#10 & 1-#8 EG, 3/4"C	30
41	3-#8 & 1-#8 EG, 1"C	40	42	4-#8 & 1-#8 EG, 1"C	40
43	3-#6 & 1-#8 EG, 1"C	55	44	4-#6 & 1-#8 EG, 1"C	55
45	3-#4 & 1-#8 EG, 1 1/4"C	70	46	4-#4 & 1-#8 EG, 1 1/4"C	70
47	3-#3 & 1-#8 EG, 1 1/4"C	85	48	4-#3 & 1-#8 EG, 1 1/4"C	85
49	3-#2 & 1-#8 EG, 1 1/4"C	95	50	4-#2 & 1-#8 EG, 1 1/4"C	95
51	3-#1 & 1-#6 EG, 1 1/2"C	110	52	4-#1 & 1-#6 EG, 1 1/2"C	110
53	3-#1/0 & 1-#6 EG, 1 1/2"C	150	54	4-#1/0 & 1-#6 EG, 1 1/2"C	150
55	3-#2/0 & 1-#4 EG, 2"C	175	56	4-#2/0 & 1-#4 EG, 2"C	175
57	3-#3/0 & 1-#2 EG, 2"C	200	58	4-#3/0 & 1-#4 EG, 2"C	200
59	3-#4/0 & 1-#2 EG, 2"C	230	60	4-#4/0 & 1-#2 EG, 2 1/2"C	230
61	3-#250kcmil & 1-#2 EG, 2 1/2"C	255	62	4-#250kcmil & 1-#2 EG, 2 1/2"C	255
63	3-#300kcmil & 1-#2 EG, 2 1/2"C	285	64	4-#300kcmil & 1-#2 EG, 3"C	285
65	3-#350kcmil & 1-#2 EG, 2 1/2"C	310	66	4-#350kcmil & 1-#2 EG, 3"C	310
67	3-#400kcmil & 1-#1/0 EG, 2 1/2"C	335	68	4-#400kcmil & 1-#1/0 EG, 3"C	335
69	3-#500kcmil & 1-#1/0 EG, 3"C	380	70	4-#500kcmil & 1-#1/0 EG, 3 1/2"C	380
71	3-#600kcmil & 1-#1/0 EG, 3 1/2"C	420	72	4-#600kcmil & 1-#1/0 EG, 4"C	420

SCHEDULE NOTES :
1. RESIZE GROUND CONDUCTOR FOR PARALLEL SERVICE FEEDERS AS REQUIRED PER TABLE 250.66 OF THE NEC. INCREASE SIZE OF CONDUIT AS REQUIRED FOR ADDITIONAL GROUNDING.
2. ALL AMPACITIES INDICATED ARE COPPER BASED ON TEMPERATURE RATING OF 60°C INSULATION ON CONDUCTORS #1 AND SMALLER AND 75°C INSULATION ON CONDUCTORS #1/0 AND LARGER.
3. THIS TABLE APPLIES TO THE DERIVED CONDUCTORS OF SEPARATELY DERIVED SYSTEMS.

ELECTRICAL METERING

AGGREGATE LOADS

PANEL NAME	LOCATION	METERING REQUIRED	LIGHTING	HVAC	PLUG LOADS LESS THAN 25KVA	NON-HVAC LOADS GREATER THAN 25KVA	SUBMETER REQUIRED	SUBMETERING REQUIREMENTS
NSWBD	ELEC 117	YES					YES	ALL LOADS AGGREGATE
NHMP1	ELEC 117	YES		X				
NH1	ELEC 117	YES	X					
NLRP1	ELEC 117	YES			X			
NLRP2	ELEC 117	YES		X	X		YES	
NLTP1	COMM 116	YES		X	X		YES	
SHMDP	UPS 123	YES						ALL LOADS AGGREGATE
SHMP1	UPS 123	YES	X	X			YES	
SLRP3	UPS 123	YES		X	X		YES	
SLFP1	UPS 123	YES			X			
SLSP1	UPS 123	YES				X		
SLRP1	UPS 123	YES			X			
SLRP2	UPS 123	YES			X			
SLTP1	SEC COMM 121	YES			X			
SLTP2	SEC COMM 121	YES			X			

TYPICAL PANEL NAMING

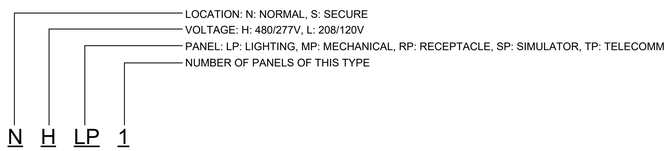

D3 TYPICAL PANEL NAMING DIAGRAM
SCALE: NTS

SHEET KEYNOTES

1. FOUR 4" CONDUITS, EACH CONTAINING FOUR #600 KCMIL. ONE 4" CONDUIT SPARE.
2. TWO 4" CONDUITS, EACH CONTAINING FOUR # 600KCMIL AND ONE #1/0 GND.
3. PROVIDE 15KV LOADBREAK REDUCING TAP PLUG AND CONNECT NEW LOADBREAK ELBOW TO EXISTING DEAD BREAK ELBOWS IN MANHOLE. PROVIDE THREADED STUD AS NECESSARY TO MAKE CONNECTION IN DEAD BREAK ELBOW.
4. INSTALL (2) 5" PVC CONDUITS IN CONCRETE-ENCASED DUCTBANK. ONE CONDUIT SHALL HAVE (3) - #1/0, 15KV COPPER, MV-105, 133% INSULATION, COPPER TAPE SHIELD CABLES AND (1) - #4/0 THHN/THWN-2 EGC. THE SECOND CONDUIT SHALL BE SPARE.
5. CONNECT TO FIRE PUMP HOUSE SERVICE ENTRANCE TERMINAL BLOCK.
6. (3) - #3, (1) - #8 GROUND IN 2" CONDUIT INSTALLED IN CONCRETE-ENCASED DUCTBANK. CONDUCTOR SIZE IS BASED ON BASIS OF DESIGN FIRE PUMP HOUSE LOAD. CONTRACTOR SHALL COORDINATE FINAL CONDUCTOR SIZES WITH SUBMITTED EQUIPMENT.
7. ~~TWO 2" CONDUITS, EACH CONTAINING (3) - #4/0~~ AND (1) - #2 EG.
8. FOUR 4" CONDUITS, EACH CONTAINING (4) - #600 KCMIL AND (1) #4/0 EG. ONE 4" CONDUIT SPARE.
9. ROUTE CAT6 CABLE FROM MAIN SWITCHBOARD NSWBD MAIN POWER METER TO MAIN COMM ROOM 116 FOR CONNECTION TO BASE COMMUNICATIONS SYSTEM.
10. SECURE POWER FILTER. 480V, 3 PHASE, 800A, 5A INPUT (3H, 1N, 1G). 480V, 3 PHASE, 800V 5W OUTPUT (3H, 1N, 1G).
11. TWO 4" CONDUITS, EACH CONTAINING FOUR # 600KCMIL AND ONE #3/0 SSBJ.
12. EPO LOCATED IN KNOX BOX ON BUILDING EXTERIOR. REFER TO FIRE ALARM SERIES. PROVIDE CABLING AND RACEWAYS FOR A FULLY FUNCTIONAL SYSTEM.

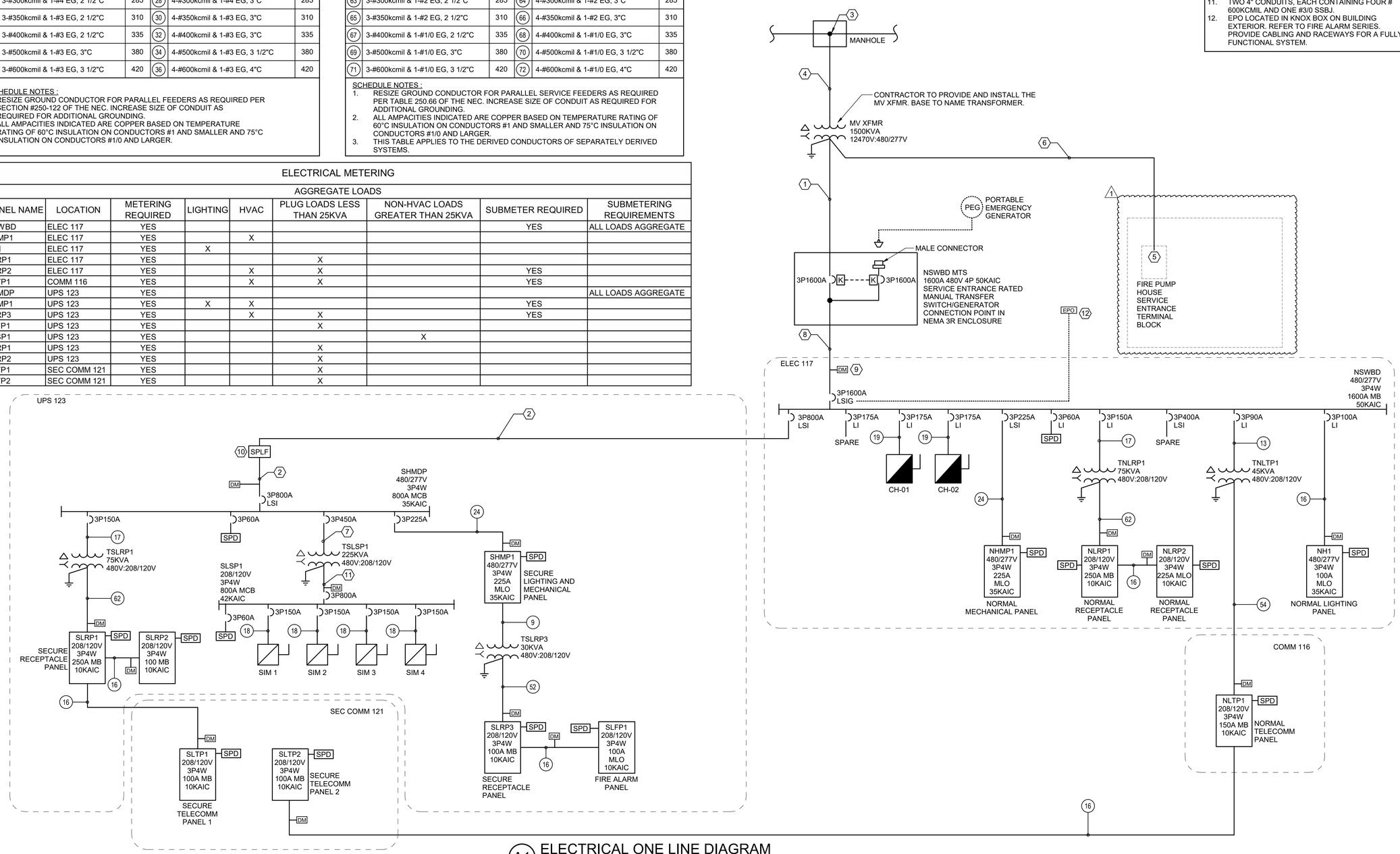

A1 ELECTRICAL ONE LINE DIAGRAM
SCALE: NTS

ATKINS BLACK & VEATCH FSB JOINT VENTURE
5801 Broadway Extension, Suite 500
Oklahoma City, OK 73118-7436
405.840.2931 | fsb-ae.com

PROFESSIONAL ENGINEER Marcus A. Prater 30821 OKLAHOMA

177th FIGHTER WING

NEW JERSEY ANG - 177th FW F-16 Mission Training Center (MTC) Atlantic City ANG Base

Egg Harbor Township, New Jersey

REVISION HISTORY:

1	ADDENDUM NO. 3	11-05-2025
△	DESCRIPTION	DATE

PROJECT INFORMATION:

DESIGNED BY: MAP
DRAWN BY: MAP
REVIEWED BY: JTL
PROJECT MANAGER: FDN

PROJECT NUMBER: 2022-130-00

SHEET TITLE: ONE-LINE DIAGRAMS

ISSUE DATE: MAY 15, 2025

SHEET NUMBER: EP600

10/29/2025 8:56:26 AM
C:\Users\mwp2\OneDrive - FSB\Autodesk Engineering\Documents\21300_Elec_mpratter1.rvt

Switchboard: NSWBD

Location: ELEC 117
Supply From: MV TRANSFORMER
Mounting: PAD
Enclosure: NEMA 1

Volts: 480/277 Wye
Phases: 3
Wires: 4

A.I.C. Rating: 50000
Mains Type: MAIN BREAKER
Mains Rating: 1600 A
MCB Rating: 1600 A

Notes:
LSIG MAIN WITH SHUNT TRIP, DIGITAL POWER METER, INTEGRAL SURGE PROTECTIVE DEVICE, ERMS FOR MAIN BREAKER.

CKT	Circuit Description	# of Poles	Frame Size	Trip Rating	Load	Remarks
NSWBD-1	NHMP1	3	400 A	225 A	99404 VA	LSI
NSWBD-2	TNLTP1	3	250 A	90 A	18228 VA	LI
NSWBD-3	TNLRP1	3	250 A	150 A	25557 VA	LI
NSWBD-4	SHMDP	3	800 A	800 A	381167 VA	LSI
NSWBD-5	CH-01	3	250 A	175 A	102305 VA	LI
NSWBD-6	CH-02	3	250 A	175 A	102305 VA	LI
NSWBD-7	NH1	3	400 A	20 A	2646 VA	
NSWBD-8	SPD	3	100 A	60 A	0 VA	LI
NSWBD-9	SPARE	3	400 A	400 A	0 VA	LSI
NSWBD-10	SPARE	3	400 A	175 A	0 VA	LI
				Total Conn. Load:	729724 VA	
				Total Amps:	878 A	

Legend:

Load Classification	Connected Load	Demand Factor	Estimated Demand	Panel Totals	
HVAC	106977 VA	100.00%	106977 VA		
LIGHTING	10569 VA	100.00%	10569 VA	**Total Conn. Load:**	729724 VA
POWER	480009 VA	100.00%	480009 VA	**Total Est. Demand:**	693585 VA
RECEPTACLE	82320 VA	56.07%	46160 VA	**Total Conn.:**	878 A
FIRE PROTECTION	2180 VA	100.00%	2180 VA	**Total Est. Demand:**	834 A
MECHANICAL	2825 VA	100.00%	2825 VA		
DEFAULT	1100 VA	100.00%	1100 VA		
UNIT HEATER	95 VA	100.00%	95 VA		
WATER HEATER	48400 VA	100.00%	48400 VA		

Notes:

Branch Panel: NLRP1

Location: ELEC 117
Supply From: TNLRP1
Mounting: SURFACE
Enclosure: NEMA 1

Volts: 208/120 Wye
Phases: 3
Wires: 4

A.I.C. Rating: 10000
Mains Type: MAIN BREAKER
Mains Rating: 250 A
MCB Rating: 250 A

Notes:
INTEGRAL SURGE PROTECTIVE DEVICE.

CKT	Circuit Description	Trip	Poles	A		B		C		Poles	Trip	Circuit Description	CKT
1	SPD	30 A	3	0 VA	360 VA					1	20 A	RECEPTACLE VEST 101	2
3	--	--	--			0 VA	900 VA			1	20 A	RECEPTACLE CLS OFF 103	4
5	--	--	--					0 VA	1080 VA	1	20 A	RECEPTACLE ADMIN 104	6
7	SPARE	20 A	1	0 VA	720 VA					1	20 A	RECEPTACLE ADMIN 104	8
9	RECEPTACLE ADMIN 104	20 A	1			720 VA	360 VA			1	20 A	RECEPTACLE ADMIN 104	10
11	RECEPTACLE ADMIN 104	20 A	1					540 VA	540 VA	1	20 A	RECEPTACLE WOM 108	12
13	RECEPTACLE PRINTER ADMIN 104	20 A	1	1000 VA	1500 VA					1	20 A	RECEPTACLE COUNTER BREAK 110	14
15	RECEPTACLE ELECTRICAL ROOM	20 A	1			360 VA	960 VA			1	20 A	RECEPTACLE REFRIGERATOR BREAK 110 *1	16
17	RECEPTACLE MECH 115	20 A	1					540 VA	1500 VA	1	20 A	UNDERCABINET LIGHTING BREAK 110	18
19	RECEPTACLE MEN 106	20 A	1	720 VA	360 VA					1	20 A	RECEPTACLE ADMIN 104	20
21	RECEPTACLE COUNTER BREAK 110	20 A	1			1500 VA	0 VA			1	20 A	SPARE	22
23	RECEPTACLE COUNTER BREAK 110	20 A	1					1500 VA	0 VA	1	20 A	SPARE	24
25	RECEPTACLE BREAK 110	20 A	1	360 VA	0 VA					1	20 A	SPARE	26
27	RECEP. WATER FOUNTAIN BREAK 110 *1	20 A	1			1000 VA	0 VA			1	20 A	SPARE	28
29	AC PS - 101B	20 A	1					120 VA	0 VA	1	20 A	SPARE	30
31	SPARE	20 A	1	0 VA	0 VA					1	20 A	SPARE	32
33	SPARE	20 A	1			0 VA	0 VA			1	20 A	SPARE	34
35	SPARE	20 A	1					0 VA	0 VA	1	20 A	SPARE	36
37	SPARE	20 A	1	0 VA	0 VA					1	20 A	SPARE	38
39	SPARE	20 A	1			0 VA	0 VA			1	20 A	SPARE	40
41	SPARE	20 A	1					0 VA	0 VA	1	20 A	SPARE	42
43	SPARE	20 A	1	0 VA	0 VA					1	20 A	SPARE	44
45	SPARE	20 A	1			0 VA	0 VA			1	20 A	SPARE	46
47	SPARE	20 A	1					0 VA	0 VA	1	20 A	SPARE	48
49	SPARE	20 A	1	0 VA	2613 VA					3	100 A	NLRP2	50
51	SPARE	20 A	1			0 VA	2782 VA			--	--	--	52
53	SPARE	20 A	1					0 VA	3533 VA	--	--	--	54
		Total Load:		7633 VA		8582 VA		9345 VA					
		Total...		64 A		73 A		79 A					

Legend:

Load Classification	Connected Load	Demand Factor	Estimated Demand	Panel Totals	
POWER	4440 VA	100.00%	4440 VA		
HVAC	50 VA	100.00%	50 VA	**Total Conn. Load:**	25557 VA
RECEPTACLE	18860 VA	76.51%	14430 VA	**Total Est. Demand:**	21127 VA
FIRE PROTECTION	1020 VA	100.00%	1020 VA	**Total Conn.:**	71 A
DEFAULT	1100 VA	100.00%	1100 VA	**Total Est. Demand:**	59 A
UNIT HEATER	95 VA	100.00%	95 VA		

Notes:
*1 PROVIDE CLASS A GFCI BREAKER.

Branch Panel: NHMP1

Location: ELEC 117
Supply From: NSWBD
Mounting: SURFACE
Enclosure: NEMA 1

Volts: 480/277 Wye
Phases: 3
Wires: 4

A.I.C. Rating: 35000
Mains Type: MLO
Mains Rating: 225 A

Notes:
INTEGRAL SURGE PROTECTIVE DEVICE.

CKT	Circuit Description	Trip	Poles	A		B		C		Poles	Trip	Circuit Description	CKT
1	SPD	30 A	3	0 VA	2104 VA					3	15 A	CWP-01	2
3	--	--	--			0 VA	2104 VA			--	--	--	4
5	--	--	--					0 VA	2104 VA	--	--	--	6
7	SPARE	20 A	3	0 VA	581 VA					3	15 A	HWP-01	8
9	--	--	--			0 VA	581 VA			--	--	--	10
11	--	--	--					0 VA	581 VA	--	--	--	12
13	CH-02	15 A	3	1722 VA	7169 VA					3	30 A	AHU-01	14
15	--	--	--			1722 VA	7169 VA			--	--	--	16
17	--	--	--					1722 VA	7169 VA	--	--	--	18
19	CWP-02	15 A	3	2104 VA	942 VA					3	15 A	BP-1	20
21	--	--	--			2104 VA	942 VA			--	--	--	22
23	--	--	--					2104 VA	942 VA	--	--	--	24
25	HWP-02	15 A	3	581 VA	2657 VA					3	15 A	RF-01	26
27	--	--	--			581 VA	2657 VA			--	--	--	28
29	--	--	--					581 VA	2657 VA	--	--	--	30
31	SPARE	50 A	3	0 VA	8800 VA					1	40 A	WH-03 WOM 108	32
33	--	--	--			0 VA	8800 VA			1	40 A	WH-04 BREAK 110	34
35	--	--	--					0 VA	13200 VA	1	60 A	WH-01 MEN 106	36
37	SPARE	30 A	3	0 VA	17600 VA					1	80 A	WH-02 JAN 107	38
39	--	--	--			0 VA	0 VA			3	30 A	SPARE	40
41	--	--	--					0 VA	0 VA	--	--	--	42
43	SPARE	20 A	3	0 VA	0 VA					--	--	--	44
45	--	--	--			0 VA	0 VA			1	50 A	SPARE	46
47	--	--	--					0 VA	0 VA	1	30 A	SPARE	48
49	SPARE	20 A	3	0 VA	0 VA					1	30 A	SPARE	50
51	--	--	--			0 VA	0 VA			1	20 A	SPARE	52
53	--	--	--					0 VA	0 VA	1	20 A	SPARE	54
		Total Load:		43181 VA		26063 VA		30291 VA					
		Total...		158 A		94 A		112 A					

Legend:

Load Classification	Connected Load	Demand Factor	Estimated Demand	Panel Totals	
POWER	50754 VA	100.00%	50754 VA		
MECHANICAL	2825 VA	100.00%	2825 VA	**Total Conn. Load:**	99404 VA
WATER HEATER	48400 VA	100.00%	48400 VA	**Total Est. Demand:**	99404 VA
				Total Conn.:	120 A
				Total Est. Demand:	120 A

Notes:

Branch Panel: NLRP2

Location: ELEC 117
Supply From: NLRP1
Mounting: SURFACE
Enclosure: NEMA 1

Volts: 208/120 Wye
Phases: 3
Wires: 4

A.I.C. Rating: 10000
Mains Type: MLO
Mains Rating: 250 A

Notes:
INTEGRAL SURGE PROTECTIVE DEVICE.

CKT	Circuit Description	Trip	Poles	A		B		C		Poles	Trip	Circuit Description	CKT
1	SPD	30 A	3	0 VA	120 VA					1	20 A	BAS PANEL - 115	2
3	--	--	--			0 VA	240 VA			1	15 A	FCU-04 CONDENSATE PUMP	4
5	--	--	--					0 VA	18 VA	1	15 A	UH-01	6
7	VAV-01, 02, 10	20 A	1	150 VA	77 VA					1	15 A	UH-03	8
9	TOILET SENSORS AND SINK FAUCETS	20 A	1			200 VA	922 VA			1	15 A	FCU-04	10
11	BLR-01	15 A	1					500 VA	1176 VA	1	20 A	RF-02	12
13	BLR-02	15 A	1	500 VA	696 VA					1	15 A	EF-02	14
15	LC LIGHTING CONTACTOR CONTROL CIRCUIT	20 A	1			0 VA	160 VA			1	20 A	FLOW CONTROL VALVE	16
17	EF-01	15 A	1					696 VA	60 VA	1	20 A	FLOW CONTROL VALVE	18
19	FLOW CONTROL VALVE	20 A	1	150 VA	900 VA					1	20 A	RECEPTACLE EXTERIOR SOUTH	20
21	FACU CLS OFF 103	20 A	1			360 VA	900 VA			1	20 A	RECEPTACLE EXTERIOR NORTH	22
23	MNS CLS OFF 103	20 A	1					600 VA	540 VA	1	20 A	RECEPTACLE JAN 107 & STO 109	24
25	EMERGENCY TEXT SIGN	20 A	1	20 VA	0 VA					1	20 A	SPARE	26
27	SPARE	20 A	1			0 VA	0 VA			1	20 A	SPARE	28
29	SPARE	20 A	1					0 VA	0 VA	1	20 A	SPARE	30
31	SPARE	20 A	1	0 VA	0 VA					1	20 A	SPARE	32
33	SPARE	20 A	1			0 VA	0 VA			1	20 A	SPARE	34
35	SPARE	20 A	1					0 VA	0 VA	1	20 A	SPARE	36
37	SPARE	20 A	1	0 VA	0 VA					1	20 A	SPARE	38
39	SPARE	20 A	1			0 VA	0 VA			1	20 A	SPARE	40
41	SPARE	20 A	1					0 VA	0 VA	1	20 A	SPARE	42
		Total Load:		2613 VA		2782 VA		3533 VA					
		Total...		22 A		23 A		30 A					

Legend:

Load Classification	Connected Load	Demand Factor	Estimated Demand	Panel Totals	
POWER	4321 VA	100.00%	4321 VA		
HVAC	50 VA	100.00%	50 VA	**Total Conn. Load:**	8920 VA
RECEPTACLE	2340 VA	100.00%	2340 VA	**Total Est. Demand:**	8920 VA
FIRE PROTECTION	1020 VA	100.00%	1020 VA	**Total Conn.:**	25 A
DEFAULT	1100 VA	100.00%	1100 VA	**Total Est. Demand:**	25 A
UNIT HEATER	95 VA	100.00%	95 VA		

Notes:
*1 PROVIDE CLASS A GFCI BREAKER.

NSWBD NLRP1 NHMP1 NLRP2

ATKINS BLACK & VEATCH FSB JOINT VENTURE
5801 Broadway Extension, Suite 500
Oklahoma City, OK 73118-7436
405.840.2931 | fsb-ae.com

PROFESSIONAL ENGINEER LICENSED Marcus A. Prater 30821 OKLAHOMA

177th FIGHTER WING

NEW JERSEY ANG - 177th FW
F-16 Mission Training Center (MTC)
Atlantic City ANG Base
Egg Harbor Township, New Jersey

REVISION HISTORY:

1	ADDENDUM NO. 3	11-05-2025
△	DESCRIPTION	DATE

PROJECT INFORMATION:

DESIGNED BY: MAP
DRAWN BY: MAP
REVIEWED BY: JTL
PROJECT MANAGER: FDN
PROJECT NUMBER: 2022-130-00
SHEET TITLE: **PANEL SCHEDULES**
ISSUE DATE: MAY 15, 2025
SHEET NUMBER: EP700

10/28/2025 8:56:28 AM
C:\Users\mapr\OneDrive - FSB\Atkins\Engineers\Documents\2-130000_Elec_mpratel.rvt

Branch Panel: SLRP2

Location: UPS 123
Supply From: SLRP1
Mounting: SURFACE
Enclosure: NEMA 1

Volts: 208/120 Wye
Phases: 3
Wires: 4

A.I.C. Rating: 10000
Mains Type: MAIN BREAKER
Mains Rating: 100 A
MCB Rating: 100 A

Notes:
INTEGRAL SURGE PROTECTIVE DEVICE.

CKT	Circuit Description	Trip	Poles	A		B		C		Poles	Trip	Circuit Description	CKT
1	SPD	30 A	3	0 VA	1080 VA					1	20 A	RECEPTACLE NETWORK 122	2
3	--	--	--			0 VA	540 VA			1	20 A	JBOX SYS FURNITURE MX WK/SPARES 127	4
5	--	--	--					0 VA	540 VA	1	20 A	JBOX SYS FURNITURE MX WK/SPARES 127	6
7	RECEPTACLE NETWORK 122	20 A	1	720 VA	540 VA					1	20 A	JBOX SYS FURNITURE MX WK/SPARES 127	8
9	RECEPTACLE NETWORK 122	20 A	1			720 VA	180 VA			1	20 A	RECEPTACLE SIM 4 126	10
11	RECEPTACLE MX WK/SPARES 127	20 A	1					540 VA	180 VA	1	20 A	RECEPTACLE SIM 4 126	12
13	RECEPTACLE MX WK/SPARES 127	20 A	1	720 VA	900 VA					1	20 A	RECEPTACLE SIM 4 126	14
15	RECEPTACLE SIM 4 126	20 A	1			180 VA	180 VA			1	20 A	RECEPTACLE SIM 3 124	16
17	RECEPTACLE SIM 4 126	20 A	1					180 VA	180 VA	1	20 A	RECEPTACLE SIM 3 124	18
19	RECEPTACLE SIM 3 124	20 A	1	180 VA	270 VA					1	20 A	FLOW CONTROL VALVE	20
21	RECEPTACLE SIM 3 124	20 A	1			180 VA	1500 VA			1	20 A	RECEPTACLE L5-20 MX WK/SPARES 127	22
23	RECEPTACLE SIM 3 124	20 A	1					900 VA	1500 VA	1	20 A	RECEPTACLE L5-20 MX WK/SPARES 127	24
25	FLOW CONTROL VALVE	20 A	1	210 VA	720 VA					1	20 A	RECEPTACLES MX WK/SPARES 127	26
27	AC PS - 112A, 113A, 114A	20 A	1			360 VA	360 VA			1	20 A	AC PS - 112B, 122A, 125A	28
29	SPARE	20 A	1					0 VA	0 VA	1	20 A	SPARE	30
31	SPARE	20 A	1	0 VA	0 VA					1	20 A	SPARE	32
33	SPARE	20 A	1			0 VA	0 VA			1	20 A	SPARE	34
35	SPARE	20 A	1					0 VA	0 VA	1	20 A	SPARE	36
37	SPARE	20 A	1	0 VA	0 VA					1	20 A	SPARE	38
39	SPARE	20 A	1			0 VA	0 VA			1	20 A	SPARE	40
41	SPARE	20 A	1					0 VA	0 VA	1	20 A	SPARE	42
43	SPARE	20 A	1	0 VA	0 VA					1	20 A	SPARE	44
45	SPARE	20 A	1			0 VA	0 VA			1	20 A	SPARE	46
47	SPARE	20 A	1					0 VA	0 VA	1	20 A	SPARE	48
49	SPACE WITH PROVISIONS	--	1	--	--					1	--	SPACE WITH PROVISIONS	50
51	SPACE WITH PROVISIONS	--	1			--	--			1	--	SPACE WITH PROVISIONS	52
53	SPACE WITH PROVISIONS	--	1					--	--	1	--	SPACE WITH PROVISIONS	54
		Total Load:		5291 VA		4200 VA		3973 VA					
		Total...		44 A		35 A		33 A					

Legend:

Load Classification	Connected Load	Demand Factor	Estimated Demand	Panel Totals	
POWER	2753 VA	100.00%	2753 VA		
RECEPTACLE	10740 VA	96.55%	10370 VA	**Total Conn. Load:**	13460 VA
				Total Est. Demand:	13090 VA
				Total Conn.:	37 A
				Total Est. Demand:	36 A

Notes:

Branch Panel: SLRP3

Location: UPS 123
Supply From: TSLRP3
Mounting: SURFACE
Enclosure: NEMA 1

Volts: 208/120 Wye
Phases: 3
Wires: 4

A.I.C. Rating: 10000
Mains Type: MAIN BREAKER
Mains Rating: 100 A
MCB Rating: 100 A

Notes:
INTEGRAL SURGE PROTECTIVE DEVICE.

CKT	Circuit Description	Trip	Poles	A		B		C		Poles	Trip	Circuit Description	CKT
1	SPD	30 A	3	0 VA	1085 VA					1	15 A	FCU-01	2
3	--	--	--			0 VA	240 VA			1	15 A	FCU-02	4
5	--	--	--					0 VA	240 VA	1	15 A	FCU-03	6
7	SLFP1	100 A	3	160 VA	150 VA					1	20 A	VAV-07, 08, 09	8
9	--	--	--			40 VA	502 VA			1	20 A	BLUE LIGHTS - SEC AREA	10
11	--	--	--					960 VA	31 VA	1	20 A	BLUE LIGHTS - 111	12
13	VAV-03, 04	20 A	1	100 VA	120 VA					1	20 A	BAS PANEL - 126	14
15	VAV-05, 06, 11	20 A	1			150 VA	0 VA			1	20 A	SPARE	16
17	FCU-01 CONDENSATE PUMP	15 A	1					240 VA	0 VA	1	20 A	SPARE	18
19	FCU-02 CONDENSATE PUMP	15 A	1	240 VA	0 VA					1	20 A	SPARE	20
21	FCU-03 CONDENSTATE PUMP	15 A	1			240 VA	0 VA			1	20 A	SPARE	22
23	SPARE	20 A	1					0 VA	0 VA	1	20 A	SPARE	24
25	SPARE	20 A	1	0 VA	0 VA					1	20 A	SPARE	26
27	SPARE	20 A	1			0 VA	0 VA			1	20 A	SPARE	28
29	SPARE	20 A	1					0 VA	0 VA	1	20 A	SPARE	30
31	SPARE	20 A	1	0 VA	0 VA					1	20 A	SPARE	32
33	SPARE	20 A	1			0 VA	0 VA			1	20 A	SPARE	34
35	SPARE	20 A	1					0 VA	0 VA	1	20 A	SPARE	36
37	SPARE	20 A	1	0 VA	0 VA					1	20 A	SPARE	38
39	SPARE	20 A	1			0 VA	0 VA			1	20 A	SPARE	40
41	SPARE	20 A	1					0 VA	0 VA	1	20 A	SPARE	42
43	SPARE	20 A	1	0 VA	0 VA					1	20 A	SPARE	44
45	SPARE	20 A	1			0 VA	0 VA			1	20 A	SPARE	46
47	SPARE	20 A	1					0 VA	0 VA	1	20 A	SPARE	48
49	SPACE WITH PROVISIONS	--	1	--	--					1	--	SPACE WITH PROVISIONS	50
51	SPACE WITH PROVISIONS	--	1			--	--			1	--	SPACE WITH PROVISIONS	52
53	SPACE WITH PROVISIONS	--	1					--	--	1	--	SPACE WITH PROVISIONS	54
		Total Load:		1855 VA		1172 VA		1471 VA					
		Total...		16 A		10 A		13 A					

Legend:

Load Classification	Connected Load	Demand Factor	Estimated Demand	Panel Totals	
POWER	840 VA	100.00%	840 VA		
HVAC	1965 VA	100.00%	1965 VA	**Total Conn. Load:**	4498 VA
LIGHTING	533 VA	100.00%	533 VA	**Total Est. Demand:**	4498 VA
FIRE PROTECTION	1160 VA	100.00%	1160 VA	**Total Conn.:**	12 A
				Total Est. Demand:	12 A

Notes:

Branch Panel: NH1

Location: ELEC 117
Supply From: NSWBD
Mounting: SURFACE
Enclosure: NEMA 1

Volts: 480/277 Wye
Phases: 3
Wires: 4

A.I.C. Rating: 35000
Mains Type: MLO
Mains Rating: 100 A

Notes:

CKT	Circuit Description	Trip	Poles	A		B		C		Poles	Trip	Circuit Description	CKT
1	LIGHTING - 101, 103, 115, 116, 117	20 A	1	600 VA	0 VA					1	20 A	SPARE	2
3	SPARE	20 A	1			0 VA	0 VA			1	20 A	SPARE	4
5	LIGHTING - 104, 105, 110	20 A	1					576 VA	0 VA	1	20 A	SPARE	6
7	LIGHTING - EXTERIOR	20 A	1	449 VA	0 VA					1	20 A	SPARE	8
9	LIGHTING - EXTERIOR	20 A	1			80 VA	0 VA			1	20 A	SPARE	10
11	AREA LIGHTING	20 A	1					398 VA	0 VA	1	20 A	SPARE	12
13	LIGHTING - 106, 107, 108, 109	20 A	1	550 VA	0 VA					1	20 A	SPARE	14
15	LIGHTING - EXTERIOR	20 A	1			20 VA	0 VA			1	20 A	SPARE	16
17	SPARE	20 A	1					0 VA	0 VA	1	20 A	SPARE	18
19	SPARE	20 A	1	0 VA	0 VA					1	20 A	SPARE	20
21	SPARE	20 A	1			0 VA	0 VA			1	20 A	SPARE	22
23	SPARE	20 A	1					0 VA	0 VA	1	20 A	SPARE	24
25	SPARE	20 A	1	0 VA	0 VA					1	20 A	SPARE	26
27	SPARE	20 A	1			0 VA	0 VA			1	20 A	SPARE	28
29	SPARE	20 A	1					0 VA	0 VA	1	20 A	SPARE	30
31	SPARE	20 A	1	0 VA	0 VA					1	20 A	SPARE	32
33	SPARE	20 A	1			0 VA	0 VA			1	20 A	SPARE	34
35	SPARE	20 A	1					0 VA	0 VA	1	20 A	SPARE	36
37	SPARE	20 A	1	0 VA	0 VA					1	20 A	SPARE	38
39	SPARE	20 A	1			0 VA	0 VA			1	20 A	SPARE	40
41	SPARE	20 A	1					0 VA	0 VA	1	20 A	SPARE	42
		Total Load:		1599 VA		100 VA		966 VA					
		Total...		6 A		0 A		4 A					

Legend:

Load Classification	Connected Load	Demand Factor	Estimated Demand	Panel Totals	
POWER	13 VA	100.00%	13 VA		
LIGHTING	2633 VA	100.00%	2633 VA	**Total Conn. Load:**	2646 VA
				Total Est. Demand:	2646 VA
				Total Conn.:	3 A
				Total Est. Demand:	3 A

Notes:

SLRP2 SLRP3
NH1

ATKINS BLACK & VEATCH FSB JOINT VENTURE
5801 Broadway Extension, Suite 500
Oklahoma City, OK 73118-7436
405.840.2931 | fsb-ae.com

PROFESSIONAL ENGINEER LICENSED Marcus A. Prater 30821 OKLAHOMA 11/05/2025

177th FIGHTER WING

NEW JERSEY ANG - 177th FW
F-16 Mission Training Center (MTC)
Atlantic City ANG Base
Egg Harbor Township, New Jersey

REVISION HISTORY:

1	ADDENDUM NO. 3	11-05-2025
△	DESCRIPTION	DATE

PROJECT INFORMATION:

DESIGNED BY:	MAP
DRAWN BY:	MAP
REVIEWED BY:	JTL
PROJECT MANAGER:	FDN

PROJECT NUMBER: 2022-130-00

SHEET TITLE: **PANEL SCHEDULES**

ISSUE DATE: MAY 15, 2025

SHEET NUMBER: EP703

10/29/2025 8:56:34 AM
C:\Users\mpr\OneDrive - FSB Architects + Engineers\Documents\21300_Elec_mpraterr1.rvt

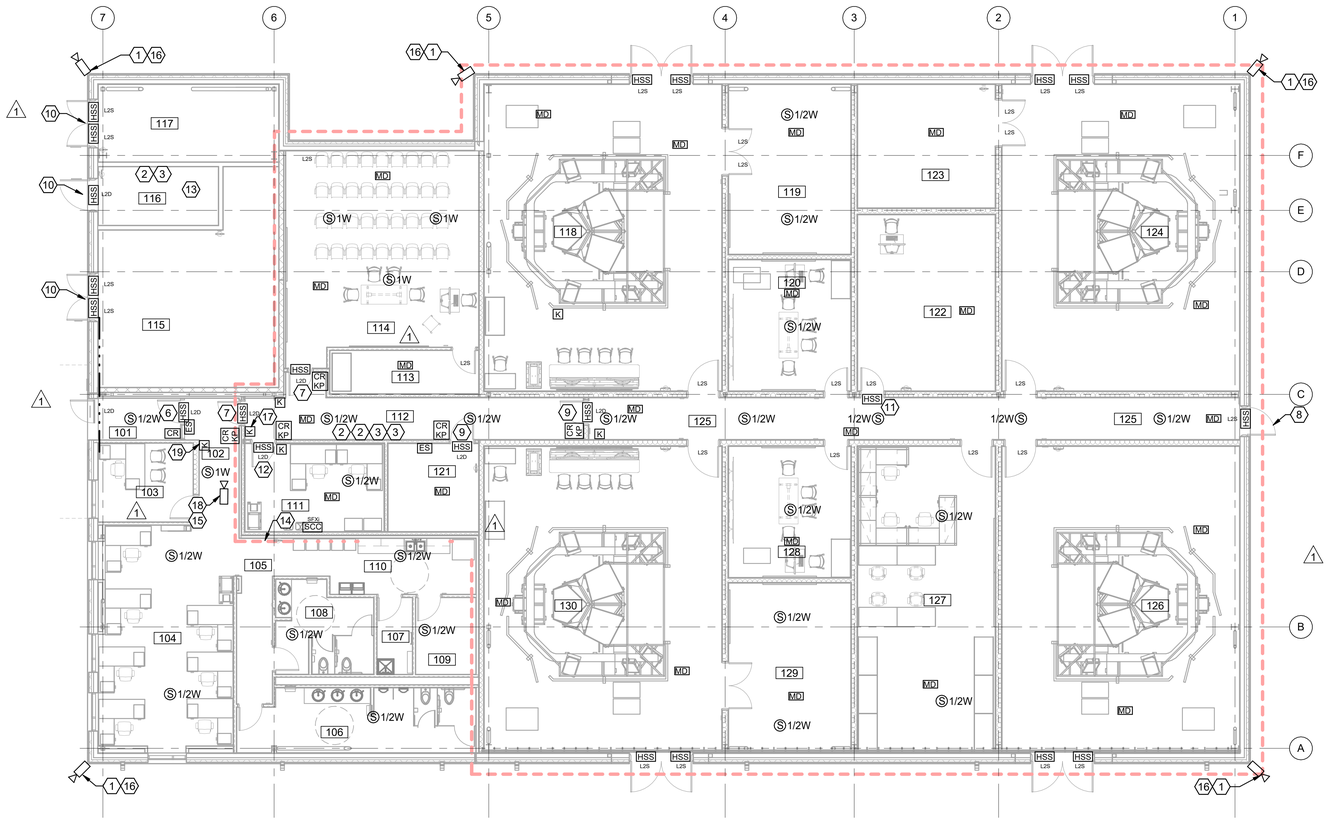

B2 TELECOMMUNICATIONS SPECIAL SYSTEMS GROUND FLOOR PLAN

SCALE: 1/8" = 1'-0"

ROOM SCHEDULE

NUMBER	NAME
101	VEST
102	LOBBY
103	CLS OFF
104	ADMIN
105	CORR
106	MEN
107	JAN
108	WOM
109	STO
110	BREAK
111	SEC OFF
112	MAN TRAP
113	STO/AV
114	MOC
115	MECH
116	COMM
117	ELEC
118	SIM 1
119	IOS 1&2
120	BDS 1
121	SEC COMM
122	NETWORK
123	UPS
124	SIM 3
125	CORR
126	SIM 4
127	MX WK/SPARES
128	BDS 2
129	IOS 3&4
130	SIM 2

SHEET KEYNOTES

1. SECURITY DEVICE LOCATION. PTZ CAMERA BY OTHERS. CONDUIT AND BOX ROUGH ONLY.
2. INFRAGUARD IDS LAN (BY OTHERS).
3. INFRAGUARD ACS LAN (BY OTHERS).
4. PAGING SYSTEM SPEAKER. RE: EY601 FOR PA RISER DIAGRAM.
5. REQUEST TO EXIT BUILT INTO DOOR HANDLE HARDWARE (TYP).
6. ADA DOOR OPERATOR SHALL TIE INTO ACCESS CONTROL SYSTEM VIA DOOR CONTROL I/O.
7. FF-L-2890C TYPE IV PEDESTRIAN DOOR WITH PANIC BAR AND DEADBOLT DEVICE.
8. FF-L-2890C TYPE X PEDESTRIAN DOOR DEADBOLT DEVICE.
9. FF-L-2890C TYPE VIII PEDESTRIAN DOOR DEADBOLT DEVICE.
10. DOOR WITH MECHANICAL CYPHER LOCKS AND KEY BACKUP. FF-L-2890C TYPE VII PEDESTRIAN DOOR DEADBOLT DEVICE.
12. FF-L-2890C TYPE II PEDESTRIAN DOOR DEADBOLT DEVICE.
13. ALL ELECTRONIC SECURITY SYSTEM (ESS) DEVICE OUTSIDE OF AREA A ARE CONNECTED TO THE SECURITY PANEL IN ROOM 116.
14. ALL ELECTRONIC SECURITY SYSTEM (ESS) DEVICE INSIDE OF AREA A ARE CONNECTED TO THE SECURITY OFFICE IN ROOM 111.
15. THIS CAMERA WILL BE MONITORED AT THE SECURITY OFFICE 111 AND CONNECTED VIA FIBER OPTIC CABLE INTO AREA A.
16. THESE CAMERAS WILL BE TERMINATED AT THE COMM ROOM 116 AND MONITORED BY THE BDOC. NO NVR REQUIRED FOR THIS CAMERA.
17. KEYPAD IN SECURE AREA MAN TRAP - 112 DISARMS IDS IN ROOMS 112, 118, 119, 120, 121, 122, 123, 124, 125, 126, 127, 128, 129, 130.
18. SECURITY DEVICE LOCATION. FIXED CAMERA BY OTHERS. CONDUIT AND BOX ROUGH ONLY.
19. KEYPAD IN LOBBY - 102 DISARMS IDS IN ROOMS 115, 116, 117.

GENERAL NOTES

A. ANY DIMENSIONS SHOWN ON THESE DRAWINGS ARE INTENDED TO PROVIDE A GENERAL LOCATION AS REQUESTED BY THE OWNER. THE CONTRACTOR SHALL BE RESPONSIBLE FOR CONFIRMING ALL DIMENSIONS PRIOR TO ROUGH-IN AND IMMEDIATELY REPORT ANY CONFLICTS WITH THE OUTLET PLACEMENT TO THE CONTRACTING OFFICER'S REPRESENTATIVE.

B. ALL CABLE BUNDLES WILL BE SUPPORTED EVERY 48"-60" OC WITH A J-HOOK OR OTHER APPROVED PATHWAY DEVICE. REFERENCE SPECIFICATIONS AND DETAILS FOR ADDITIONAL CABLING PATHWAY INSTALLATION REQUIREMENTS. CONTRACTOR WHO VIOLATES THESE REQUIREMENTS WILL BE REQUIRED TO REPLACE THE AFFECTED CABLE PLANT AT THEIR EXPENSE.

C. PLASTIC TIE WRAPS ARE NOT PERMITTED AT ANY TIME ON THIS INSTALLATION. ALL CABLE ROUGH-IN AND DRESS-OUT WILL BE WITH VELCRO ONLY. ALL CABLES BUNDLED WITH PLASTIC TIE WRAPS SHALL BE IMMEDIATELY REPLACED AT THE CONTRACTOR'S EXPENSE.

D. DO NOT INSTALL ANY CABLES IN ANY CONDUIT SLEEVE, STUB UP, OR WALL CAP WITHOUT A PROTECTIVE BUSHING. CABLES PULLED INTO UNPROTECTED CONDUITS WILL BE REPLACED AT THE CONTRACTOR'S EXPENSE. DO NOT INSTALL ANY CABLING INTO ANY CONDUIT THAT HAS NOT BEEN CONFIRMED TO BE BLOWN CLEAR. COORDINATE PRIOR TO ROUGH IN OF ANY CABLING.

E. ANY CABLING FOUND PAINTED DURING THE CONSTRUCTION PROCESS WILL BE REPLACED AT CONTRACTOR'S EXPENSE. CONTRACTOR SHALL COORDINATE TO AVOID CONFLICTS.

F. IT IS THE RESPONSIBILITY OF THE CONTRACTOR TO REFERENCE BOTH THE PROJECT DRAWINGS AND THE PROJECT SPECIFICATIONS. TOGETHER THEY FORM THE COMPLETE CONTRACT DOCUMENTS. PLEASE REFERENCE THE PROJECT SPECIFICATIONS FOR ALL MATERIALS, EQUIPMENT AND COMPONENTS NOT INDICATED ON THE DRAWING SET.

G. CONTRACTOR SHALL COORDINATE ALL FINAL CAMERA LOCATIONS, HEIGHTS AND CAMERA VIEWING ANGLES WITH CONTRACTING OFFICER'S REPRESENTATIVE. FAILURE TO COORDINATE ALL FINAL CAMERA LOCATIONS, HEIGHTS AND VIEW ANGLES MAY REQUIRE RELOCATION OF CONDUITS, CABLE AND CAMERA LOCATIONS AT CONTRACTOR'S EXPENSE.

H. CONTRACTOR SHALL COORDINATE TECHNOLOGY, TELECOM, SECURITY AND AUDIO VISUAL LOCATIONS SO THAT DATA AND POWER ARE AT THE SAME HEIGHT AND SPACED 18"-24" APART UNLESS SPECIFIED OTHERWISE. REFERENCE TECHNOLOGY AND MEP SHEETS FOR COORDINATION.

I. ALL CABLING INSTALLED IN AREAS WITH EXPOSED CEILINGS SHALL BE INSTALLED IN A PROPERLY SIZED CONDUIT PATHWAY. CONDUIT PATHWAYS SHALL BE PROVIDED AND INSTALLED BY THE CONTRACTOR. THE CONDUIT MAY BE PAINTED TO MATCH CEILING COLOR AS DIRECTED BY THE CONTRACT DOCUMENTS.

J. CONTRACTOR SHALL BE RESPONSIBLE FOR STOPPING ALL TECHNOLOGY, TELECOM, SECURITY AND AUDIO VISUAL CONDUIT PENETRATIONS FROM WATER OR RODENT INGRESS IN ALL BUILDINGS UPON COMPLETION OF THE PROJECT.

K. ALL 90S IN CONDUIT SHOULD BE SWEEPING 90S. IF MORE THAN TWO (2) 90'S ARE REQUIRED, A JUNCTION BOX MUST BE INSTALLED.

L. ISP FIBER AND COPPER SHALL BE SEPARATED BY 6" IN ALL SECURE AREAS.

M. ALL HORIZONTAL RUNS SHALL BE IN CONDUIT UNTIL ENTERING CABLE TRAY.

N. ALL SECURE AREA DROPS SHALL TERMINATE IN SECURE COMM ROOM 121.

O. REFER TO SB 102 AND AE101 FOR TRENCHES AND RAISED FLOOR AREAS.

P. ALL IDS WIRING CONDUIT REFER TO ESE-SIT-0001 SECTIONS 3.3.3, 3.3.4, AND 3.3.5.

Q. PROVIDE SURGE PROTECTIONS DEVICES (SPDS) FOR COMMUNICATION EQUIPMENT AND SPECIALIZED ELECTRICAL EQUIPMENT SUCH FIRE ALARM AND DETECTION SYSTEMS (ANTENNAS), EXTERIOR SECURITY SYSTEMS (EXTERIOR CAMERAS) AND MASS NOTIFICATIONS SYSTEMS (MNS) ARE AREAS OF REQUIREMENT OF AFI 32-1065 AND NFA 780. SPDS SHALL BE UL1283 AND UL1449 RATED SPDS WOULD BE FOR THE 120 VOLT POWER FOR THE SPECIAL SYSTEM PA RISER AND 120 VOLT POWER FOR THE SPECIAL SYSTEM INTRUSION DETECTION SYSTEM.

R. ALL PENETRATIONS THROUGH EXTERIOR STUD WALL CONSTRUCTION MUST BE PROPERLY FIRE-SEALED TO MAINTAIN ENCAPSULATION OF SPRAY-FOAM INSULATION.

ATKINS BLACK & VEATCH FSB JOINT VENTURE
5801 Broadway Extension, Suite 500
Oklahoma City, OK 73118-7436
405.840.2931 | fsb-ae.com

STATE OF MISSOURI
WILLIAM A. HOWEN
NUMBER PE-2019000176
11/5/2025
PROFESSIONAL ENGINEER

177th FIGHTER WING

NEW JERSEY ANG - 177th FW
F-16 Mission Training Center (MTC)
Atlantic City ANG Base
Egg Harbor Township, New Jersey

REVISION HISTORY:

	DESCRIPTION	DATE
2	ADDENDUM NO.3	11-05-2025
1	ADDENDUM NO.2	07-22-2025

PROJECT INFORMATION:

DESIGNED BY: SAB
DRAWN BY: JTW
REVIEWED BY: WAH
PROJECT MANAGER: FDN
PROJECT NUMBER: 2022-130-00
SHEET TITLE: TELECOMMUNICATIONS SPECIAL SYSTEMS GROUND FLOOR PLAN
ISSUE DATE: MAY 15, 2025
SHEET NUMBER: EY101

PLAN N TRUE N

0 4' 8' 16'
1/8" = 1'-0"

10/31/2025 6:06:31 PM
C:\Revit\local_23\21300_Tele_mar60955.rvt

DOCUMENT 00 22 13.00 20

SUPPLEMENTARY INSTRUCTIONS TO OFFERORS

PART 1 GENERAL

1.1 CONTRACT LINE ITEMS

The terms Offeror and Bidder and versions thereof (offer/bid) have the same definition as used within this contract.

Provide the Contract Line Item (CLIN) lump sum price for the following items:

CLIN 0001 - BASE BID Price includes the following:

CLIN 0001. Price for the entire work for the F-16 MTC (Simulator) and Sitework (Excluding ESS Systems) in accordance with the Contract Documents, but excluding work described in Contract Line Items (CLIN) 0004 through 0011.

CLIN	DESCRIPTION	TOTAL PRICE FOR CLIN 0001
0001	Base Bid - F-16 MTC (Simulator Facility) (Excluding ESS Systems) and Sitework	$_____

CLIN 0002 - Price includes the following:

Price for providing all work in connection with the Advantor ESS (ACS/IDS/CCTV) System complete. Furnish and install Secure Area portions of Advantor ESS System in accordance with the Contract Documents, including all material, equipment and labor.

CLIN	DESCRIPTION	TOTAL PRICE FOR CLIN 0002
0002	Advantor ESS System - Secure Area	$_____

CLIN 0003 Optional Line Item No 1 - Price includes the following:

Price for Site Demolition, provide new bituminous and concrete pavements, and striping, west parking area (42 spaces) complete, in accordance with the Contract Documents, including all material, equipment and labor.

ADDENDUM #3 - NOVEMBER 5, 2025

CLIN	DESCRIPTION	TOTAL PRICE FOR CLIN 0004
0003 ADDENDUM #3 - NOVEMBER 5, 2025	Site Demo, New Pavements & Striping (42 spaces). All transformers, pads, sidewalks, U.G. utilities need to be demoed and removed for both RSS's as part of this optional line item.	$_____

CLIN 0004 Optional Line Item No. 2 - Price includes the following:

Price for providing all work in connection with resurface and re-stripe bituminous parking pavement and parking lot islands cleanup - South parking area (66 Spaces) complete in accordance with the Contract Documents, including all material, equipment and labor.

CLIN	DESCRIPTION	TOTAL PRICE FOR CLIN 0005
0004	Resurface & Re-stripe Pavement, and Parking Island Planter Cleanup (66 Spaces)	$_____ ADDENDUM #3 - NOVEMBER 5, 2025

CLIN 0005 Optional Line Item No. 3 - Price includes the following:

Price for providing all work in connection with additional Masonry Veneer, complete. Furnish and install all additional masonry veneer (in lieu of insulated metal wall panel system) in accordance with the Contract Documents, including all material, equipment and labor. Primary scope references include Drawings, Building Elevations.

CLIN	DESCRIPTION	TOTAL PRICE FOR CLIN 0005
0005	Additional Masonry Veneer	$_____

CLIN 0006 Optional Line Item No. 4 - Price includes the following:

Price for providing all work in connection with the Vertical Building Entry Monolith, complete. Furnish and install vertical building entry monolith (base bid: no monolith),(Entry Canopy to remain in Base Bid)in accordance with the Contract Documents, including all material, equipment and labor.

CLIN	DESCRIPTION	TOTAL PRICE FOR CLIN 0006
0006	Vertical Building Entry Monolith	$_____

CLIN 0007 Optional Line Item No. 5 - Price includes the following:

Price for providing all work in connection with Mechanical Equipment Yard: provide Masonry Wall, complete. Furnish and install masonry wall (2 segments only in lieu of chain-link fence with visual slats) in accordance with the Contract Documents, including all material, equipment and labor.

CLIN	DESCRIPTION	TOTAL PRICE FOR CLIN 0007
0007	Mechanical Yard Walls	$_____

CLIN 0008 Optional Line Item No. 6 - Price includes the following:

Price for providing all work in connection with Concrete Surface at Mechanical Yard, complete. Furnish and install concrete surface at mechanical yard (in lieu of Stone Ground Cover with Fabric Underlayment) in accordance with the Contract Documents, including all material, equipment and labor.

ADDENDUM #3 - NOVEMBER 5, 2025

CLIN	DESCRIPTION	TOTAL PRICE FOR CLIN 0008
0008	Concrete Surface at Mechanical Yard	$_____

CLIN 0009 Optional Line No. 7 - Price includes the following:

Price for providing all work in connection with Illuminated Unit Insignia Sign, complete. Furnish and install illuminated unit insignia sign with controls (Base bid: no insignia sign) in accordance with the Contract Documents, including all material, equipment and labor.

CLIN	DESCRIPTION	TOTAL PRICE FOR CLIN 0009
0009	Illuminated Unit Insignia Sign	$_____

CLIN 0010 Optional Line Item No. 8 - Price includes the following:

Price for providing, Furnish and install additional concrete pavement to support simulator install complete. Provide additional concrete pavements to support simulator install (Base bid: turf grass), identified as O.L.I. No. 8 in accordance with the Contract Documents, including all material, equipment and labor.

CLIN	DESCRIPTION	TOTAL PRICE FOR CLIN 0010
0010	Additional Concrete Pavement for Sim Install	$_____

Total Price (CLINS 0001, 0002, 0003, 0004, 0005, 0006, 0007, 0008, 0009, and 0010). $_____

1.2 GENERAL BID NOTES

1.2.1 Notes

a. Offeror' s shall provide a price for all items on the Price Schedule.

b. A firm fixed price is required for each item and no provision will be made for economic adjustments.

c. Options will be evaluated in accordance with FAR 52.217-5 Evaluation of Options.

d. Evaluation of the Options will not obligate the Government to execute any or all of the Options.

e. Should the Government choose to exercise the Option, the contract completion date shall not change.

g. The Offeror's price is valid for at least 120 days from the receipt of proposals.

PART 2 PRODUCTS

Not used.

PART 3 EXECUTION

Not used.

-- End of Document --

SECTION 32 92 19

SEEDING

PART 1 GENERAL

1.1 REFERENCES

The publications listed below form a part of this specification to the extent referenced. The publications are referred to within the text by the basic designation only.

ASTM INTERNATIONAL (ASTM)

ASTM C602	(2020) Agricultural Liming Materials
ASTM D4972	(2018) Standard Test Methods for pH of Soils

NEW JERSEY DEPARTMENT OF TRANSPORTATION (NJDOT)

NJDOT	(2019) New Jersey Department of Transportation Standard Specifications for Road and Bridge Construction

U.S. DEPARTMENT OF AGRICULTURE (USDA)

AMS Seed Act	(1940; R 1988; R 1998) Federal Seed Act
DOA SSIR 42	(1996) Soil Survey Investigation Report No. 42, Soil Survey Laboratory Methods Manual, Version 3.0

1.2 DEFINITIONS

1.2.1 Stand of Turf

95 percent ground cover of the established species.

1.3 SUBMITTALS

Government approval is required for submittals with a "G" classification. Submittals not having a "G" classification are for Contractor Quality Control approval. Submittals with an "S" are for inclusion in the Sustainability eNotebook, in conformance with Section 01 33 29 SUSTAINABILITY REPORTING. Submit the following in accordance with Section 01 33 00 SUBMITTAL PROCEDURES:

SD-03 Product Data

Wood Cellulose Fiber Mulch

Fertilizer

Include physical characteristics, and recommendations.

SD-06 Test Reports

Topsoil Composition Tests (reports and recommendations).

SD-07 Certificates

State Certification and Approval for Seed

1.4 DELIVERY, STORAGE, AND HANDLING

1.4.1 Delivery

1.4.1.1 Seed Protection

Protect from drying out and from contamination during delivery, on-site storage, and handling.

1.4.1.2 Fertilizer and Lime Delivery

Deliver to the site in original, unopened containers bearing manufacturer's chemical analysis, name, trade name, trademark, and indication of conformance to state and federal laws. Instead of containers, fertilizer and lime may be furnished in bulk with certificate indicating the above information.

1.4.2 Storage

1.4.2.1 Seed, Fertilizer and Lime Storage

Store in cool, dry locations away from contaminants.

1.4.2.2 Topsoil

Prior to stockpiling topsoil, treat growing vegetation with application of appropriate specified non-selective herbicide. Clear and grub existing vegetation three to four weeks prior to stockpiling topsoil.

1.4.2.3 Handling

Do not drop or dump materials from vehicles.

1.5 TIME RESTRICTIONS AND PLANTING CONDITIONS

1.5.1 Restrictions

Do not plant when the ground is frozen, snow covered, muddy, or when air temperature exceeds 90 degrees Fahrenheit.

1.6 TIME LIMITATIONS

1.6.1 Seed

Apply seed within twenty four hours after seed bed preparation.

PART 2 PRODUCTS

2.1 SEED

2.1.1 Classification

Provide State-approved seed of the latest season's crop delivered in original sealed packages, bearing producer's guaranteed analysis for percentages of mixtures, purity, germination, weedseed content, and inert material. Label in conformance with AMS Seed Act and applicable state seed laws. Wet, moldy, or otherwise damaged seed will be rejected. Field mixes will be acceptable when field mix is performed on site in the presence of the Contracting Officer.

2.1.2 Planting Dates

Planting Season	Planting Dates
Season 1	March 1 to May 15
Season 2	August 15 to October 15

2.1.3 Seed Purity

Provide grass seed mixtures than the sell by date and that conform to the requirements specified in NJDOT, Section 917.03 SEED MIXTURES.

2.2 TOPSOIL

2.2.1 On-Site Topsoil

Surface soil stripped and stockpiled on site and modified as necessary to meet the requirements specified for topsoil in paragraph COMPOSITION. When available topsoil must be existing surface soil stripped and stockpiled on-site in accordance with Section 31 00 00 EARTHWORK.

2.2.2 Off-Site Topsoil

Conform to requirements specified in paragraph COMPOSITION. Additional topsoil must be furnished by the Contractor.

2.2.3 Composition

Containing from 5 to 10 percent organic matter as determined by the topsoil composition tests of the Organic Carbon, 6A, Chemical Analysis Method described in DOA SSIR 42. Maximum particle size, 3/4 inch, with maximum 3 percent retained on 1/4 inch screen. The pH must be tested in accordance with ASTM D4972. Topsoil must be free of sticks, stones, roots, and other debris and objectionable materials. Other components must conform to the following limits:

Silt	0-30 percent
Clay	10-30 percent

Sand	40-80 percent
pH	5.8 to 7.0

2.3 SOIL CONDITIONERS

Add conditioners to topsoil as required to bring into compliance with "composition" standard for topsoil as specified herein.

2.3.1 Lime

Commercial grade hydrate limestone containing a calcium carbonate equivalent (C.C.E.) as specified in ASTM C602 of not less than 40 percent.

2.4 FERTILIZER

2.4.1 Granular Fertilizer

Adhere to New Jersey Fertilizer Law P.L. 2010, Chapter 112.

2.5 MULCH

Mulch must be free from noxious weeds, mold, and other deleterious materials.

2.5.1 Straw

Stalks from oats, wheat, rye, barley, or rice. Furnish in air-dry condition and of proper consistency for placing with commercial mulch blowing equipment. Straw must contain no fertile seed.

2.5.2 Hay

Air-dry condition and of proper consistency for placing with commercial mulch blowing equipment. Hay must be sterile, containing no fertile seed.

2.5.3 Wood Cellulose Fiber Mulch

Use recovered materials of either paper-based (100 percent post-consumer content) or wood-based (100 percent total recovered content) hydraulic mulch. Processed to contain no growth or germination-inhibiting factors and dyed an appropriate color to facilitate visual metering of materials application. Composition on air-dry weight basis: 9 to 15 percent moisture, pH range from 5.5 to 8.2. Use with hydraulic application of grass seed and fertilizer.

2.6 WATER

Source of water must be approved by Contracting Officer and of suitable quality for irrigation, containing no elements toxic to plant life.

PART 3 EXECUTION

3.1 PREPARATION

3.1.1 EXTENT OF WORK

Provide soil preparation prior to planting (including soil conditioners as

required), fertilizing, seeding, and surface topdressing of all newly graded finished earth surfaces, unless indicated otherwise, and at all areas inside or outside the limits of construction that are disturbed by the Contractor's operations.

3.1.1.1 Topsoil

Provide 4 inches of existing soil to meet indicated finish grade. After areas have been brought to indicated finish grade, incorporate fertilizer into soil a minimum depth of 4 inches by disking, harrowing, tilling or other method approved by the Contracting Officer. Remove debris and stones larger than 3/4 inch in any dimension remaining on the surface after finish grading. Correct irregularities in finish surfaces to eliminate depressions. Protect finished topsoil areas from damage by vehicular or pedestrian traffic.

3.2 SEEDING

3.2.1 Seed Application Seasons and Conditions

Immediately before seeding, restore soil to proper grade. Do not seed when ground is muddy, frozen, snow covered or in an unsatisfactory condition for seeding. If special conditions exist that may warrant a variance in the above seeding dates or conditions, submit a written request to the Contracting Officer stating the special conditions and proposed variance. Apply seed within twenty four hours after seedbed preparation. Sow seed by approved sowing equipment. Sow one-half the seed in one direction, and sow remainder at right angles to the first sowing.

3.2.2 Seed Application Method

Seeding method must be broadcasted and drop seeding.

3.2.2.1 Broadcast and Drop Seeding

Seed must be uniformly broadcast. Use broadcast or drop seeders. Sow one-half the seed in one direction, and sow remainder at right angles to the first sowing. Cover seed uniformly to a maximum depth of 1/4 inch in clay soils and 1/2 inch in sandy soils by means of spike-tooth harrow, cultipacker, raking or other approved devices.

3.2.3 Mulching

3.2.3.1 Hay or Straw Mulch

Hay or straw mulch must be spread uniformly at the rate of 2.5 tons per acre. Mulch must be spread by hand, blower-type mulch spreader, or other approved method. Mulching must be started on the windward side of relatively flat areas or on the upper part of steep slopes, and continued uniformly until the area is covered. The mulch must not be bunched or clumped. Sunlight must not be completely excluded from penetrating to the ground surface. All areas installed with seed must be mulched on the same day as the seeding. Mulch must be anchored immediately following spreading.Mulch must be binded in place by one of the tackifiers specified in NJDOT.

3.2.4 Erosion Control Material

Install in accordance with manufacturer's instructions, where indicated or

as directed by the Contracting Officer.

3.2.5 Watering

Start watering areas seeded as required by temperature and wind conditions. Apply water at a rate sufficient to insure thorough wetting of soil to a depth of 2 inches without run off. During the germination process, seed is to be kept actively growing and not allowed to dry out.

3.3 PROTECTION OF TURF AREAS

Immediately after turfing, protect area against traffic and other use.

3.3.1 MAINTENANCE AND WARRANTY

3.3.1.1 Maintenance Period

The Contractor shall maintain all seeded turf areas continuously from the time of final seeding until the start of the warranty period. Maintenance shall include watering, mowing, fertilization, weed control, pest control, aeration, topdressing, and other operations required to ensure healthy turf establishment and compliance with specified performance criteria. The Government (or designated representative) shall have the right to inspect maintenance operations, and the Contractor shall immediately correct deficiencies at no additional cost.

3.3.1.2 Warranty Period

Upon completion of the maintenance period and after final acceptance, the Contractor shall warrant the turf against defects in materials, workmanship, or establishment for a period of one (1) year from the date of final acceptance. During the warranty period, any areas failing to meet specified turf quality standards (e.g. minimum percent ground cover, acceptable species mix, absence of bare spots, limited weed invasion) or showing deterioration attributable to defects shall be repaired or replaced by the Contractor at no cost to the Government. Repairs shall be made promptly after notification. The warranty excludes damage or deterioration caused by acts beyond Contractor's control, such as natural disasters, unauthorized traffic, neglect, misuse, or events of force majeure.

3.3.1.3 Overlap and Transition

The maintenance period and the warranty period may overlap or abut, but no gap in responsibility is permitted. If the maintenance period extends up to final acceptance, the warranty period shall begin on that date. If inspections or remedial work are required during the warranty, the Contractor shall maintain responsibility for that work until corrected, and such work shall not be considered as a new warranty start.

3.3.1.4 Warranty

The Contractor shall warrant that the seeded turf shall be free from defects in materials, workmanship, and establishment for a period of one (1) year from the date of final acceptance by the Contracting Officer. Any areas that fail to meet the specified turf performance criteria or show deterioration due to defects shall be repaired or replaced by the Contractor at no additional cost to the Government. Repairs shall be completed promptly after notification. The warranty does not cover damage

resulting from acts beyond the Contractor's control (e.g. natural disasters, vandalism, or misuse).

-- End of Section --

ADDENDUM #3
NOVEMBER 5, 2025

THIS PAGE INTENTIONALLY LEFT BLANK