TABLE OF CONTENTS

SECTION 1 - THE SCHEDULE

- SF-1449 cover sheet
- Continuation To SF-1449, RFQ Number 19MX5326Q0034, Prices, Block 23
- Continuation To SF-1449, RFQ Number 19MX5326Q0034, Schedule Of Supplies/Services, Block 20 Description/Specifications/Work Statement
- Attachment A to Statement of Work
- Attachment B to Equipment List
- Attachment C to One Line Diagram Utility
- Attachment D to One Line Diagram New Office Building
- Attachment E to Payment Registration Form – Pesos
- Attachment F to Payment Registration– USD to a bank in the United States
- Attachment G to Payment Registration– USD to a bank in Mexico
- Attachment H to Vendor Portal Registration
- Attachment I Safety Plan

SECTION 2 - CONTRACT CLAUSES

- Contract Clauses
- Addendum to Contract Clauses - FAR and DOSAR Clauses not Prescribed in Part 12

SECTION 3 - SOLICITATION PROVISIONS

- Solicitation Provisions
- Addendum to Solicitation Provisions - FAR and DOSAR Provisions not Prescribed in Part 12

SECTION 4 - EVALUATION FACTORS

- Evaluation Factors
- Addendum to Evaluation Factors - FAR and DOSAR Provisions not Prescribed in Part 12

SECTION 5 - REPRESENTATIONS AND CERTIFICATIONS

- Addendum to Offeror Representations and Certifications - FAR and DOSAR Provisions not Prescribed in Part 12

SECTION 1 - THE SCHEDULE
CONTINUATION TO SF-1449
RFQ NUMBER 19MX5326Q0034
PRICES, BLOCK 23

1. SCOPE OF SERVICES

1.1 General.

The Contractor shall be responsible for performing preventive maintenance services for the facility's low-voltage electrical switchgears.

The Contractor must demonstrate a high level of expertise, along with the necessary abilities, resources, licenses, and permits to perform the specified activities in compliance with all applicable local and federal Mexican regulations. Additionally, the contractor shall adhere to the highest industry standards and maintain superior quality in the execution of these duties. Excellence in customer service is also required as requested and approved by the Contracting Officer in accordance with the specifications, terms and conditions set forth herein.

1.2 Contract Type.

This is a firm-fixed price contract.

1.3 Period of Performance.

The performance period under this contract will commence on the date listed in the Award Letter and continue for twelve (12) months. This contract also contains FAR 52.217-9. "Option to Extend the Term of the Contract". This option allows four (4) additional 12-month periods of performance. Site visits for preventive maintenance services must be scheduled with a minimum of ten (10) business days' advance notice to ensure proper access and support.

1.4 Currency.

1.4.1 Offer and Payment in U.S. Dollars.

U.S. firms are eligible to be paid in U.S. dollars. U.S. firms desiring to be paid in U.S. dollars should submit their offer in U.S. dollars. A U.S. firm is defined as a company which operates as a corporation incorporated under the laws of a state within the United States. Local companies are eligible to be paid in U.S. dollars provided that such company has a bank account in U.S. dollars at a Local Bank.

1.4.2 Offers and Payment in Pesos, Mexican Currency.

Any firm that is not a U.S. firm is a foreign firm. Any local or foreign firm that does not meet the definition of a U.S. firm shall submit its prices and receive payment in local currency unless the foreign or local firm has a U.S. dollar bank account in Mexico.

1.5 Value Added Tax.

1.5.1 U.S. Firms.

Value Added Tax (VAT) is not applicable to U.S. firms; therefore, it shall not be included in U.S. firm's rates or Invoices.

1.5.2 Local Companies.

Value Added Tax (VAT) for offers submitted by local companies, either in U.S. Dollars or in Pesos, Mexican currency, is not included in line-item rates. Instead, it will be priced as a separate amount in the contract and on the Invoices. Local law dictates the portion of the contract price that is subject to VAT; this percentage is multiplied only against that portion.

1.6 Pricing.

The fixed prices established below for the Base Year maintenance service for the Facility's Low Voltage Electrical Switchgears plus four (4) Option Years are fully loaded rates that include all work, including furnishing any managerial, administrative, and direct labor (in compliance with any local regulations), materials, overhead, insurance, and profit. Any costs not separately priced shall be considered to be included in the overhead and other indirect costs. The U.S. Government will not pay any additional expenses.

1.6.1 Base Year Prices.

The firm fixed-price for this Base Year shall be a fully loaded rate.

As per paragraph 1.4 above, Base Year Prices are in _____ [Insert Currency].

CLIN	Service	Switchgear Utility Building and New Office Building S/N	Quantity	Cost per unit (generator)	Unit	Total per Year ($)
001	Annual preventive maintenance services.	FACTORY ORDER 40021516-530 FACTORY ORDER 40021516-531 CAT95113253P14 CAT95113253P14 CAT95113253P14 CAT95113253P14 CAT95113253P14 CAT95113253P14 FACTORT ORDER 40021516-408 FACTORY ORDER O40021516-409 FACTORY ORDER 40021516-410 FACTORY ORDER 40021516-410	14		Each	

		FACTORY ORDER 40021516-411 FACTORY ORDER 40021516-411				
002	Annual preventive maintenance services.	Automatic Transfer Switch (ATS) H07ATBA31200N5XC	1		Each	
Subtotal Base Year						
Value Added Tax (VAT)						
Total Base Year						

1.6.2. First Option Year Prices.

The firm fixed-price for this First Option Year shall be a fully loaded rate.

As per paragraph 1.4 above, Base Year Prices are in _____ *[Insert Currency]*.

CLIN	Service	Switchgear Utility Building and New Office Building S/N	Quantity	Cost per unit (generator)	Unit	Total per Year ($)
101	Annual preventive maintenance services.	FO40021516-530 FO40021516-531 CAT95113253P14 CAT95113253P14 CAT95113253P14 CAT95113253P14 CAT95113253P14 CAT95113253P14 FO40021516-408 FO40021516-409 FO40021516-410 FO40021516-410 FO40021516-411 FO40021516-411 ATS H07ATBA31200N5XC	14		Each	
102	Annual preventive maintenance services.	Automatic Transfer Switch (ATS) H07ATBA31200N5XC	1		Each	
Subtotal Base Year						
Value Added Tax (VAT)						
Total Base Year						

1.6.3 Second Option Year Prices.

The firm fixed-price for this Second Option Year shall be a fully loaded rate.

As per paragraph 1.4 above, Base Year Prices are in _____ *[Insert Currency]*.

CLIN	Service	Switchgear Utility Building and New Office Building S/N	Quantity	Cost per unit (generator)	Unit	Total per Year ($)
201	Annual preventive maintenance services.	FO40021516-530 FO40021516-531 CAT95113253P14 CAT95113253P14 CAT95113253P14 CAT95113253P14 CAT95113253P14 CAT95113253P14 FO40021516-408 FO40021516-409 FO40021516-410 FO40021516-410 FO40021516-411 FO40021516-411	14		Each	
202	Annual preventive maintenance services.	Automatic Transfer Switch (ATS) H07ATBA31200N5XC	1		Each	
Subtotal Base Year						
Value Added Tax (VAT)						
Total Base Year						

1.6.4 Third Option Year Prices.

The firm fixed-price for this Third Option Year shall be a fully loaded rate.

As per paragraph 1.4 above, Base Year Prices are in _____ *[Insert Currency]*.

CLIN	Service	Switchgear Utility Building and New Office Building S/N	Quantity	Cost per unit (generator)	Unit	Total per Year ($)
301	Annual preventive maintenance services.	FO40021516-530 FO40021516-531 CAT95113253P14 CAT95113253P14 CAT95113253P14 CAT95113253P14 CAT95113253P14 CAT95113253P14 FO40021516-408 FO40021516-409 FO40021516-410 FO40021516-410 FO40021516-411 FO40021516-411	14		Each	
302	Annual preventive maintenance services.	Automatic Transfer Switch (ATS) H07ATBA31200N5XC	1		Each	
Subtotal Base Year						
Value Added Tax (VAT)						
Total Base Year						

1.6.5 Fourth Option Year Prices.

The firm fixed-price for this Fourth Option Year shall be a fully loaded rate.

As per paragraph 1.4 above, Base Year Prices are in _____ *[Insert Currency]*.

CLIN	Service	Switchgear Utility Building and New Office Building S/N	Quantity	Cost per unit (generator)	Unit	Total per Year ($)
401	Annual preventive maintenance services.	FO40021516-530 FO40021516-531 CAT95113253P14 CAT95113253P14 CAT95113253P14 CAT95113253P14 CAT95113253P14 CAT95113253P14 FO40021516-408 FO40021516-409 FO40021516-410 FO40021516-410 FO40021516-411 FO40021516-411	14		Each	
402	Annual preventive maintenance services.	Automatic Transfer Switch (ATS) H07ATBA31200N5XC	1		Each	
Subtotal Base Year						
Value Added Tax (VAT)						
Total Base Year						

1.6.6 GRAND TOTAL OF BASE AND ALL OPTION YEARS	
Base Year Total	
Option Year 1 Total	
Option Year 2 Total	
Option Year 3 Total	
Option Year 4 Total	
GRAND TOTAL	

2. ACRONYMS

- CAA: Controlled-Access Area
- CDMX: Mexico City
- CLIN: Contract Line Item Numbers
- CO: Contracting Officer
- COR: Contracting Officer's Representative
- CY: Calendar Year
- DS: Diplomatic Security
- FAC: Facility Manager
- FAR: Federal Acquisition Regulation
- FM: Facility Manager
- GSO: General Service Office
- HAZMAT: Hazardous Materials
- JHA: Job Hazards Analysis
- MSDS: Material Safety Data Sheet
- O&M: Operations and Maintenance
- OEM: Original Equipment Manufacturer
- PCC: Post Communications Center
- PCO: Post Control Officer
- PM: Preventive Maintenance
- PMSC: Preventive Maintenance System
- POSHO: Post Occupation Safety and Health Officer
- QAP**:** Quality Assurance Plan
- RSO: Regional Security Officer
- SBU: Sensitive But Unclasssified
- SOW: Statement of Works
- SPT: Safety Plan Template
- US: United States
- USPP: United States Personal Property
- VFD: Variable Frequency Drive

3. DESCRIPTION

The U.S. Embassy in Mexico City requires preventive Tier II switchgear maintenance services for the Utility Building and New Office Building, defined as visual and mechanical inspection to ensure the proper operation of all factory and vendor installed meters, breakers, controls and remote power monitoring equipment associated with the switchgear, inspection of the entire switchgear for loose parts, connections and functioning indicator lights and cleaning, wiping down and vacuuming each compartment, inside and outside the cabinets. The systems and components to be maintained include

power conducting equipment such as switches, circuit breakers, fuses and control systems such as control panels, current transformers and protective relays. The objective of scheduled preventive maintenance under this contract is to eliminate system malfunction, breakdown and deterioration when units are activated. If this work is to be performed on systems accessing the PCC/CAA (Controlled Access) areas of the building. Please see section 6.2.3 for security requirements.

4. NOTICE TO PROCEED

After Contract award and submission of acceptable insurance certificates and copies of all applicable licenses and permits, the Contracting Officer will issue a Notice to Proceed. The Notice to Proceed will establish a date (a minimum of ten (10) days from date of Contract award unless the Contractor agrees to an earlier date) on which performance shall start**.**

5. EQUIPMENT AND PERFORMANCE REQUIREMENTS

5.1 The U.S. Embassy at Mexico City requires the Contractor to maintain the following equipment in a safe, reliable and efficient operating condition. Please see equipment list included in Attachment B for a more detailed description.

5.2 The Contractor shall provide the labor, tools and materials required to perform all preventive maintenance in accordance with this work statement.

Under this Contract the Contractor shall provide:

- A licensed electrician/qualified technician to provide service on switchgear.
- Evidence of experience performing preventive maintenance of switchgear equipment, preferably with Schneider brand equipment.
- Evidence that the technicians performing the work are qualified/licensed electricians with experience in switchgear preventive maintenance.

5.3 Performance Standards.

The Facility's Electrical Switchgear systems shall be clean and in good operating condition upon completion of the service. The preventive maintenance service shall result in the parts of the system serviced being in a condition to operate efficiently and effectively.

5.4. Routine Maintenance Visits.

The contractor shall perform the scheduled maintenance visits, within standard working hours (8:00 AM to 5:00 PM, Monday–Friday, excluding US and local holidays). A recurring schedule (e.g., first and third Wednesday of each month) shall be coordinated with the Contracting Officer's Representative (COR). Site visits for preventive maintenance services must be scheduled with a minimum of ten (10) business days' advance notice to ensure proper access and support.

6. ACCESS TO GOVERNMENT BUILDINGS AND STANDARDS OF CONDUCT

6.1 General.

The Contractor shall designate a representative who shall supervise the Contractor's technicians and be the Contractor's liaison with the American Embassy. The Contractor's employees shall be on-site only for contractual duties and not for any other business or purpose. Contractor employees will be given access to the equipment and equipment areas and will be escorted by Embassy personnel.

6.2 Personnel Security.

The Government reserves the right to deny access to U.S.-owned and U.S.-operated facilities to any individual. The Contractor shall provide the names, biographic data and police clearance on all Contractor personnel who to be used on this Contract prior to their utilization. Submission of information shall be made within 30 days of award of contract. No technician will be allowed on site without prior authorization. Note: this may include cleared personnel if advance notice of visit is not given at least one week before the scheduled visit.

6.2.1 Vehicles.

Contractor vehicles will not be permitted inside the Embassy Compound without prior approval. If vehicle access is necessary, submit contractor vehicle information (Make, Model, License Plate #) along with a written justification as to why access is necessary. This shall be submitted to the Facility Manager at least one (1) week prior to the visit.

6.2.2 ID Requirements.

Government shall issue identity cards to Contractor personnel, after they are approved. Contractor personnel shall display identity card(s) on the uniform at all times while providing services under this contract. These identity cards are the property of the US Government. The Contractor is responsible for their return at the end of the contract, when an employee leaves Contractor service, or at the request of the Government. The Government reserves the right to deny access to U.S.-owned and U.S.-operated facilities to any individual.
Government shall issue identity cards to Contractor personnel, after they are approved. Contractor personnel shall display identity card(s) on the uniform at all times while providing services under this contract. These identity cards are the property of the US Government. The Contractor is responsible for their return at the end of the contract, when an employee leaves Contractor service, or at the request of the Government. The Government reserves the right to deny access to U.S.-owned and U.S.-operated facilities to any individual.

6.2.3 Security Clearances.

All work locations under this contractor that are designated as non-CAA areas may be performed by un-cleared American or local workers. However, all work done in CAA and PCC areas shall be performed by cleared American Construction personnel as needed to complete the services. The Contractor shall work closely with the COR, the Facility Manager (FM) or the General Services Officer (GSO).

6.4 Standards of Conduct

6.4.1 General.

The Contractor shall maintain satisfactory standards of employee competency, conduct, cleanliness, appearance, and integrity and shall be responsible for taking such disciplinary action with respect to employees as may be necessary. Each Contractor employee shall adhere to standards of conduct that reflect credit on themselves, their employer, and the United States Government. The Government reserves the right to direct the Contractor to remove an employee from the worksite for failure to comply with the standards of conduct. The Contractor shall immediately replace such an employee to maintain continuity of services at no additional cost to the Government.

6.4.2 Neglect of Duties.

Neglect of duties is unacceptable. This includes sleeping while on duty, unreasonable delays or failures to carry out assigned tasks, conducting personal affairs during duty hours and refusing to render assistance or cooperate in upholding the integrity of the worksite security.

6.4.3 Disorderly Conduct.

The Contractor shall not condone disorderly conduct, use of abusive or offensive language, quarreling, and intimidation by words, actions, or fighting. Also included is participation in disruptive activities that interfere with normal and efficient Government operations.

6.4.4 Intoxicants and Narcotics.

The Contractor shall not allow its employees while on duty to possess, sell, consume, or be under the influence of intoxicants, drugs or substances which produce similar effects.

6.4.5 Criminal Actions.

Contractor employees may be subject to criminal actions as allowed by law in certain circumstances. These circumstances include but are not limited to the following actions: falsification or unlawful concealment, removal, mutilation, or destruction of any official documents or records or concealment of material facts by willful omission from official documents or records; unauthorized use of Government property, theft, vandalism, or

immoral conduct; unethical or improper use of official authority or credentials; security violations; organizing or participating in gambling in any form; and misuse of weapons.

6.4.6 Key Control.

The Contractor will not be issued any keys. The keys will be checked out by a "Cleared American" escort on the day of service requirements.

6.4.7 Notice to the Government of Labor Disputes.

The Contractor shall inform the COR of any actual or potential labor dispute that is delaying or threatening to delay the timely performance of this contract.

7. SCHEDULED PREVENTIVE MAINTENANCE SERVICES

7.1 General.

It is the Contractor's responsibility to provide all materials, supervision, labor, tools and equipment to perform preventive maintenance. All personnel working in the vicinity should wear and use appropriate safety protection while all work is performed. perform all manufacturer-recommended planned maintenance, as well as any additional maintenance specified in the manufacturer's technical manuals for standby operation of the respective equipment.

If any discrepancies are found with the switchgear(s) that are not covered under this work statement the Contractor shall provide a detailed report noting discrepancy found, bill of materials (BOM) including: component name, quantity, part # and price for any repair material required and material lead-time, emergency assistance for switchgears support within 24 hours of being contacted by the COR and price quote for repair labor.

The Contractor shall begin scheduling maintenance and outage coordination 90 days in advance.

7.1.2 Annual Electrical Switchgear Preventive Maintenance Service

At a minimum, the following work shall be completed:

- Use appropriate Personal Protective Equipment (PPE) when performing work
- Check all work areas, tools and equipment to ensure unsafe conditions are eliminated our guarded against.
- Follow safety site procedures.
- Schedule maintenance with operating personnel and affected offices.
- Before de-energizing the equipment, verify operation of back-up power before shutdown. Return to normal after verification and proceed with shut down for maintenance.
- Follow Lockout/Tagout (LOTO) procedures.
- Lock out and disconnect all sources of power before performing any work inside equipment that has been exposed to live parts or present an electrical hazard.
- Review and follow the manufacturer's instructions for the service requirements of the equipment.

- Remove LOTO in accordance with appropriate procedures.
- Record results of control work in history log (if applicable).
- Simulate utility outage after maintenance is completed to verify back-up power performance as required.
- Report all incidents and near missed incidents to the COR and assist as requested in the investigation and corrective action.
- Coordinate outage if required
- Perform Lockout/Tagout
- Review of OEM O&M procedures
- Download and provide engine fault code and event report
- Record all readings, findings, and deficiencies

At a minimum, the contractor shall comply with the following:

- Contractor shall submit to the COR for review, worksheet that will be used for performing maintenance service.
- A discrepancy report shall be submitted to the COR immediately upon discovery of any conditions that could result in equipment failure.
- Test and inspection report shall be submitted to the COR within three (3) business days of completing work.
- All test sheets and reports shall be submitted in English

Annual Schedule Switchgears

1. Visual Inspection:
   - Confirm working space and clearance is maintained around all the electrical gear per the Nacional Electrical Code (NEC) requirements.
   - Check that the electrical room is free from foreign articles not associated with the room.
   - Visual and mechanical inspection to ensure the proper operation of all factory and vendor installed meters, breakers and remote power monitoring equipment associated with the switchgear.
   - Inspect the entire switchgear for loose parts or connections. Slight discoloration or tarnish of the silver plate is normal and of no concern. Severe discoloration of the silver plate is a sign of improper or loose contact and overheating.
   - Inspect physical, electrical and mechanical condition including evidence of moisture or corona.
   - Inspect that all filters are in place and the vents are clear.
   - Check to see that all anchors' bolts and other structural bolts are tight.
   - Check for undue noise and vibration.
   - Check if room is environmentally conditioned for local temperature conditions.

2. Verification:
   - Compare the installed metering measurements with voltage and power readings from a True RMS meter. Make calibration corrections as necessary to ensure accurate voltage and power readings.
   - Verify the switchgear circuit breakers sizing match the drawings.
   - Verify the proper labeling of all the breakers in the switchgear.
   - Post breaker schedule on switchgear
   - Verify operation of heaters and thermostats, if used.
   - Verify that the Post as-built drawings (electrical one-line) match the switchgear distribution. Make "Red Ink" corrections on a paper copy as necessary. Inform the COR and FM of any discrepancies or changes to the drawings.
   - Verify that the required NFPA70-E safety equipment is available and in good condition for local staff to use.
   - Refer to the manufacturer's recommendations for additional maintenance requirements.
   - Verify Modbus lights on the PLCs are on.
   - Verify HMIs and all metering screens work properly

3. Inspect/Exercise/Clean/Correct:
   - Schedule power outage of equipment for cleaning. Coordinate any required outage with the COR and FM.
   - Photo of equipment condition **before** servicing and is required in final report documentation.
   - Perform infrared testing on all conductor connections, buss terminations. Only record hot spots on digital format for review.
   - Photo of equipment condition AFTER servicing and is required in final report documentation.
   - Perform properly Lock-out/Tag-out and ensure the system is de-energized before removing panel covers and exposing any electrical bus or cabling. Under no circumstances should the equipment be energized during the maintenance operation. Photos of equipment locked and tagged out is required in final report documentation.
   - Inspect anchorage, alignment, grounding for the equipment.
   - Inspect the bus bar connections and insulating barrier(s) for damage.
   - Inspect the cable load connectors, stand-off insulators, primary contact supports, and all accessible cable terminations for indications of insulation deterioration. Vacuum each compartment and wipe off all insulation.
   - As applicable, visually inspect trip units and settings on breakers. Replace any faulty batteries.
   - Clean each compartment. Check for damage, excessive wear, or corrosion.
   - Check and correct any loose components or connections.
   - Torque loose connections identified during the infrared test or during inspection.
   - Confirm correct operation and sequencing of electrical and mechanical interlock systems.

- Correct any faulty, damaged, discolored, and worn components using government provided spares.
- Exercise all breakers Ten (10) times, or as the manufacturer's recommendations.
- Inspect mechanical indicating devices for correct operation.
- Inspect all power control transformers for physical damage, cracked insulation, broken leads, tightness of connections, defective wiring, proper overload protection, and overall general wiring.
- Follow the manufacturer's recommendations for additional maintenance requirements.
- Clean or replace any air filters present.
- Check all control circuits by tugging on each wire to verify a snug fit.
- Remove lockout/tag out in accordance with appropriate procedures.
- Re-energize the equipment and ensure that all components are up and functioning properly. Make the COR and FM aware of all components that are not functioning properly.

Annual Schedule Automatic Transfer Switch (ATS)

- Ensure the unit is loaded to at least 40% or rated current and perform an infrared section on the normal side of the switch. Transfer the load to the backup generator and perform the infrared inspection again.
- Check for hot spots.
- Perform proper lock out tag out procedures.
- Open the transfer switch and check phase to phase and phase to ground for presence of correct voltage.
- De-energize the switch.
- Inspect wiring, wiring connections, insulation and fuse blocks for looseness, charring evidence of short circuiting and overheating.
- Clean the inside of switch cubicle, conductors and buss work.
- Check all conductors for signs of overheating, mechanical, or moisture damage to conductors.
- Tighten all connections to manufacturer's specifications.
- Inspect all exposed ground connections. Be sure the connections are clean and tight.
- Clean bus insulators.
- Clean dust and vacuum all the controls, meters, switching mechanism components, interior bus work, Remote Start control panel, Annunciator and connecting lugs of the ATS.
- Make sure the heaters (if installed) work correctly.
- Lubricate all movements and linkages.
- Disconnect the conductors to the under-voltage relays. Test the under-voltage relays using a source of test voltage. Record drop-out and pick-up voltages. After testing relays, reconnect the conductors.
- Find and disconnect the transfer operating mechanism control power. Use a remote source of voltage to operate the transfer mechanism.

- Check the contact resistance on the normal and emergency contacts.
- Re-connect the operating mechanism control wires.
- Clean indicating lenses and change lamps as needed.
- Note date of last battery change. (Replace if 2 years or older).
- Inspect seals.
- Manually exercise the switch.
- Restore the transfer switch to normal position.
- Remove tags and place generator controls in the automatic position.
- Check with affected occupant agencies for generator operations.
- Exercise ATS.
- Prior to performing test, confirm with the COR.
- This test shall consist of an electronic operation of the switch from the normal source 1 position to the alternate source 2 position and a return to normal.
- Open normal power breaker; the generator should start and the transfer switch should transfer the load to the generator source.
- Re-accomplish the infrared inspection on any problem areas in the generator position.
- Close the normal power breaker. The transfer switch should transfer the load to the normal power source and the generator should shut down after the cool down period.
- Re-accomplish the infrared inspection on any problem areas in the normal position.
- Check with the affected occupant agencies to see that normal services have been restored to all areas.
- Check, calibrate and record time delays if necessary. Observe and record retransfer/cool down time.
- Ensure system is left in proper position for automatic start and transfer.
- Perform any additional maintenance tasks as recommended in the manufacture's operation and maintenance manuals.

4. Batteries & charging system.
   - Inspect and clean battery charger
   - Record charger output voltage
   - Inspect charger wiring and ventilation
   - Verify battery condition
   - Check electrolyte level (if applicable)
   - Measure and record specific gravity
   - Clean terminals and apply corrosion protection
   - Perform battery load/condition test
   - Verify alternator/charging system operation

7.1.3 Inventory

The Contractor shall do an inventory, supply and replace expendable parts (e.g., filters, cables, bolts, gaskets, etc.) that have become worn due to wear and tear. The Contractor shall maintain a

supply of expendable and common parts on site so that these are readily available for normal maintenance to include: hoses, belts, oil, chemicals, filters (Air, Fuel, Oil), grease, sealant; in addition to the appropriate tools, testing equipment, safety shoes and apparel for technicians, personal protective equipment (hands, hearing, eye protection), Material safety data sheet (MSDS), cleaning material and oil spill containment kits. The contractor shall do an inventory of the supply after each visit and order replacement supplies and have them delivered on site. Maintenance materials shall be unused and are to be industry standard and intended for the task to be performed. Parts shall be OEM approved.

7.2 Checklist Approval.

The Contractor shall submit to the COR a schedule and description of preventive maintenance tasks which the Contractor plans to perform. The Contractor shall prepare this schedule and task description in a checklist format for the COR's approval prior to contract work commencement.

7.2.1 The Contractor shall provide trained technicians to perform the service at frequencies stated in Attachment A and on the equipment called out in this SOW.

7.2.2 It is the responsibility of the Contractor to perform all manufacturers' recommended preventive maintenance including preventive maintenance recommended by the manufacturers' technical manuals for the respective equipment.

7.2.3 Additionally, the maintenance contractor shall obtain and keep at the post O&M binders provided by the manufacturers. These binders shall be placed in a location accessible to post personnel to review as needed.

8. PERSONNEL, TOOLS, CONSUMABLE MATERIALS AND SUPPLIES

8.1 Personnel requirements.

The Contractor shall provide only qualified, trained, and certified personnel to perform all maintenance, inspection, and testing services required under this contract. It is the Contractor's sole responsibility to ensure that all technicians assigned to this project possess the necessary certifications, training, and experience to safely and effectively service the diesel standby generator systems. The U.S.G reserves the right to request that the Contractor provide certifications and any other required documentation for all personnel assigned to perform work under this contract, including when rotating or replacing staff, upon request and prior to execution of the service. The Contractor shall promptly furnish such documentation to the Contracting Officer's Representative (COR) as required.

8.2 Tools and Equipment.

The Contractor is responsible for ensuring that all tools, instruments, and testing equipment used in the performance of this contract are properly maintained, calibrated, and in safe working condition at all times. The Contractor shall ensure that all equipment meets applicable industry

standards and manufacturer requirements. Documentation of calibration and maintenance records shall be made available to the Contracting Officer's Representative (COR) upon request.

8.3 Consumable materials and supplies.

The Contractor shall provide all labor, materials, and equipment necessary to carry out the planned maintenance and inspections outlined in this Statement of Work (SOW). The Contractor is responsible for supplying, inventorying, and replacing all maintenance service items, including but not limited to filters, fluids, hoses, belts, oil, chemicals, coolant, generator starting batteries, grease, sealant, thermostats, fuses, and other expendable or common parts required for normal maintenance. The Contractor shall also provide the appropriate tools, testing equipment, personal protective equipment (PPE), Material Safety Data Sheets (MSDS), cleaning materials, and oil spill containment kits for use by technicians.

8.4 Documentation and reporting.

The Contractor shall provide the COR with a list of all necessary parts and materials prior to use. For any maintenance items included in this SOW, the Contractor shall supply the required parts (e.g., rocker cover gaskets for valve lash adjustments, thermostats for coolant changes).

If, during the course of maintenance, the Contractor identifies any discrepancies or deficiencies with the generator systems that are not covered under this SOW, the Contractor shall promptly provide the COR with a detailed report describing the issue. The Contractor shall also submit a Bill of Materials (BOM) listing the component name, quantity, part number, price for any required repair materials, and estimated material lead time, as well as a separate price quote for the associated repair labor.

9. EXCLUSION

This contract does not include the repair of equipment or the replacement of major hardware components except for those components that are specifically indicated by the manufacturer's maintenance manuals to be provided or replaced as part of the scheduled services. Any required hardware replacements or repairs will be separately priced by the Contractor and submitted to the U.S.G. for approval and acceptance.

The Government reserves the right to procure manufacturer's spare parts and labor from other competitive sources at its discretion. If the Government accepts the Contractor's quote for parts and/or labor, the Contractor shall not proceed with any repair or replacement work until a formal purchase order has been issued and approved by the Contracting Officer.

Replacement or repair of any electronic or electrical parts must be approved in advance by the Contracting Officer's Representative (COR). If the Contractor installs any electronic or electrical parts without prior COR approval, the Contractor shall remove those parts at no cost to the Government and will be responsible for any resulting damage.

Parts/materials/tools procurement and delivery for the CAA/PCC areas shall be at the discretion of the Regional Security Officer (RSO).

This exclusion does not apply to repairs required to correct damage or deficiencies resulting from Contractor negligence, errors, or improper workmanship. In such cases, the Contractor shall be fully responsible for all necessary repairs and replacements, including parts and labor, at no additional cost to the Government.

10. EMERGENCY SERVICE CALLS

Emergency Response Services are intended to provide rapid, on-call support when unexpected conditions arise that threaten the safety, integrity, or preservation of the equipment. These services focus on stabilizing hazardous situations, preventing further deterioration, and protecting the equipment until permanent repairs can be assessed and authorized. The Contractor shall be prepared to respond 24/7, mobilize promptly upon notification, and perform only those actions necessary to secure the site, mitigate immediate risks, and maintain basic functionality. All responses shall be documented and communicated to the COR.

The Contractor shall provide a reference price for each emergency service call, indicating the amount that would be charged for a single site visit to assess and stabilize an emergency situation. This reference price should include all costs associated with mobilization, inspection, and initial response actions. The reference price is for informational purposes only and will not be considered a contractually binding rate or included as a Contract Line Item Number (CLIN). The Government may use this information to estimate potential costs for emergency services; any actual emergency response work will be separately authorized and negotiated as needed.

Reference price for emergency call service $ -

11. SOFTWARE, LICENSES AND PASSWORDS

Copies of any and all software and licenses needed to control or to adjust the communications module shall be given to the post upon completion of the work.

12. DELIVERABLES

12.1 Subcontracting limitation and notification requirement

The contractor shall not subcontract more than ten percent (10%) of the total value of maintenance services under this contract without prior written approval from the COR. If subcontracted labor exceeds this threshold, the contractor must provide a list of all subcontractors engaged, including primary points of contact for each, within ten (10) business days of the Notice to Proceed. The contractor shall promptly notify the COR in writing of any changes to the list of subcontractors, including additions, removals, or changes in contact information. If subcontracted labor does not exceed ten percent (10%), the contractor shall submit a written memorandum to the COR within five (5) business days of the Notice to Proceed, confirming that subcontracted labor does not exceed the ten percent (10%) threshold.

12.2 Safety plan & special instructions.

The Contractor shall submit a comprehensive safety plan and Job Hazard Analysis (JHA) to the Contracting Officer's Representative (COR) for review and approval. The safety plan and JHA must identify the expected hazards associated with the work activities and specify the actions that will be taken to minimize the risk of each identified hazard. These documents must be submitted at least seven (7) business days prior to performing the first service under this contract. No work may commence until the COR has reviewed and approved the safety plan and JHA (See Attachment G).

The Contractor shall ensure the following safety measures are implemented throughout the performance of this contract:

- Use appropriate personal protective equipment (PPE) when performing work.
- Check all work areas, tools, and equipment to ensure unsafe conditions are eliminated or properly guarded against.
- Follow all site safety procedures.
- Schedule maintenance activities with operating personnel and affected offices, including security.
- Follow approved lockout/tag out procedures.
- Review and adhere to the manufacturer's instructions for all equipment and procedures.
- Record maintenance and safety results in the equipment history log.
- Remove lockout/tag out devices in accordance with appropriate procedures.
- Report all incidents and near-miss incidents to the COR and assist as requested in any investigation and corrective action.

12.3 Quality Assurance Requirements.

The Contractor shall demonstrate its commitment to quality management by either:

- Providing proof of current ISO 9001 certification, or
- Submitting a comprehensive Quality Assurance Plan (QAP) to the Contracting Officer's Representative (COR) within thirty (30) business days after contract award.
- If the Contractor does not possess ISO 9001 certification, the QAP must, at a minimum, address the following elements:

    - Service Procedures and Checklists.

      A general description of how maintenance visits, inspections, and minor repairs will be conducted, including the use of checklists or task lists by technicians during scheduled visits.

    - Staff Responsibilities.

      Identification of personnel responsible for supervising work quality and ensuring completion of required tasks.

    - Internal Monitoring.

      A description of the Contractor's methods for reviewing work performed, such as supervisor checks, random spot-checks, or post-visit reviews.

    - Recordkeeping.

      Procedures for documenting and storing maintenance reports, emergency response reports, and issue logs. The Contractor shall ensure that all documentation is available to the COR upon request.

    - Communication and Follow-Up.

      A process for promptly notifying the COR of any significant issues or deficiencies observed during maintenance activities, and for following up on corrective actions.

    - Service Continuity.

      A general approach to ensuring scheduled visits occur as planned, including the use of backup personnel if primary staff are unavailable.

At a minimum, each maintenance report shall include:

- Date and time of the site visit
- Names of personnel who performed the work
- Identification of the equipment serviced (including location, make, and model/serial number)
- Description of all maintenance activities performed

- List of parts and materials used or replaced
- Results of inspections, tests, or measurements conducted
- Any deficiencies, discrepancies, or issues identified during the visit
- Corrective actions taken or recommended
- Safety observations or incidents, if any
- Signature of the responsible technician and, if applicable, the supervisor

The Contractor shall ensure that all maintenance reports are accurate, complete, and made available to the COR upon request.

The following items shall be delivered under this contract:

Description	QTY	Delivery Date	Deliver to
Safety plan	1	With Proposal Reviewed version at least seven (7) business days prior to performing the first service under this contract.	COR
ISO 9001 certification or Quality Assurance Plan (QAP)	1	Within thirty (30) business days after contract award	COR
Comprehensive list of all consumable materials and tools that will be brought to each service visit to perform maintenance	1	At least five (5) business days prior to performing each service under this contract.	COR
Subcontracted Labor Notification: Written notification to the Contracting Officer of all labor subcontractors engaged if subcontracted labor exceeds 10% or a memorandum confirming subcontracted labor does not exceed 10%.	1	Within ten (10) business days of Notice to Proceed (NTP), and within five (5) business days of any subsequent changes	COR
Checklist that will be used for performing maintenance/cleaning service	1	Before performing each maintenance/cleaning service.	COR
Discrepancy Report	1	Immediately upon discovery of any condition that could result in equipment failure.	COR
Test and Inspection Report	1	Within three (3) days after completion of each service.	COR
Invoice	1	After completion of each maintenance service	COR

13 INSURANCE REQUIREMENTS

13.1 Personal Injury, Property Loss or Damage (Liability). The Contractor assumes absolute responsibility and liability for any and all personal injuries or death and property damage or losses suffered due to negligence of the Contractor's personnel in the performance of this Contract.

The Contractor's assumption of absolute liability is independent of any insurance policies.

13.2 Insurance. The Contractor, at its own expense, shall provide and maintain during the entire period of performance of this Contract, whatever insurance is legally necessary. The Contractor shall carry the following minimum insurance:

Public Liability Insurance

Property damage:	$ 5,000.00 USD
Cumulative:	$ 50,000.00 USD

Workers' Compensation and Employer's Liability

13.3 Worker's Compensation Insurance. The Contractor agrees to provide all employees with worker's compensation benefits as required under local laws (see FAR 52.228-4 "Worker's Compensation and War-Hazard Insurance Overseas").

14 LOCAL LAW REGISTRATION

If the local law or decree requires that one or both parties to the contract register the contract with the designated authorities to ensure compliance with this law or decree, the entire burden of this registration shall rest upon the Contractor. Any local or other taxes which may be assessed against the Contract shall be payable by the Contractor without Government reimbursement.

15 LICENSES AND PERMITS

The contractor shall perform the duties specified in this SOW in full compliance with all applicable local and federal regulations of Mexico and the United States, as well as applicable international standards and any additional regulations outlined in this document. The contractor shall also provide evidence of all necessary licenses, permits, and registrations required to complete the specified duties.

16 SAFETY REQUIREMENTS

The contractors shall provide and maintain work environments and procedures which will safeguard the public and Government personnel, property, materials, supplies, and equipment exposed to contractor operations and activities; contractors must avoid interruptions of Government operations and delays in project completion dates, and control costs in the performance of contract tasks. For these purposes, the contractor shall:

1. Submit a written Safety plan and JHA to the COR. The plan shall include specific management or technical procedures for effectively controlling hazards associated with the project/contract; the safety plan shall also include emergency procedures in case of any incident with his personnel.
2. Meet with the COR and the POSHO to discuss and develop a mutual understanding relative to the administration of the overall safety program.

3. Maintain an accurate record of all incidents that occurred under the contract resulting in death, injury, occupational disease, or damage to or theft of property, materials, supplies, or equipment.
4. Report all incidents/mishaps immediately in the manner indicated by the COR and/or POSHO.
5. Be responsible for its personnel and subcontractor's compliance with all the requirements of the Safety plan and JHA.
6. Provide appropriate safety barricades, signs, and signal lights.
7. Comply with the standards issued by any local government authority having jurisdiction over occupational health and safety issues.
8. Ensure that any additional safety measures that the COR and/or POSHO determines to be reasonably necessary for this purpose are accomplished.
9. Specify in the Safety plan and JHA the requirements and mitigation steps regarding safety if the work involves:
    a. Scaffolding.
    b. Work at heights.
    c. Trenching or other excavation.
    d. Earthmoving equipment.
    e. Temporary wiring, use of portable electric tools, or other recognized electrical hazards.
    f. Work in confined spaces.
    g. Use of hazardous materials – a material with a physical or health hazard
    h. Operations that create any kind of contamination inside an occupied building such as dust from demolition activities, paints, solvents, etc.
    i. Hazardous noise levels.
10. Comply with all the requirements included in the safety plan and the JHA, or any extra indications given by the POSHO and/or the COR.

The COR and/or the POSHO shall notify the CO and the contractor of any non-compliance with the safety requirements and the corrective actions required. This notice, when delivered to the contractor or the contractor's representative on site, shall be deemed sufficient notice of the non-compliance and corrective action required. After receiving the notice, the contractor shall immediately take corrective action. If the contractor fails or refuses to promptly take corrective action, the COR may issue an order suspending all or part of the work until satisfactory corrective action has been taken. The contractor shall not be entitled to any equitable adjustment of the contract price or extension of the performance schedule on any suspension of a work order issued related to safety violations detected.

17 QUALITY ASSURANCE AND SURVEILLANCE PLAN (QASP)

This plan provides an effective method to promote satisfactory contractor performance. The QASP provides a method for the Contracting Officer's Representative (COR) to monitor Contractor performance, advise the Contractor of unsatisfactory performance, and notify the Contracting Officer of continued unsatisfactory performance. The Contractor, not the Government, is responsible for management and quality control to meet the terms of the contract. The role of the Government is to monitor quality to ensure that contract standards are achieved.

Performance Objective	Scope of Work Paragraphs	Performance Threshold
Services. Performs all preventive maintenance services of the facility's electrical switchgear systems set forth in the Scope of Work. (SOW)	1 thru 16	All required services are performed and no more than one (1) customer complaint is received per month.

17.1 Surveillance. The COR will receive and document all complaints from Government personnel regarding the services provided. If appropriate, the COR will send the complaints to the Contractor for corrective action.

17.2 Standard. The performance standard is that the Government receives no more than one (1) customer complaint per month. The COR shall notify the Contracting Officer of the complaints so that the Contracting Officer may take appropriate action to enforce the inspection clause (FAR 52.212.4, Contract Terms and Conditions - Commercial Products and Commercial Services (NOV 2023), if any of the services exceed the standard.

17.3 Procedures.

(a) If any Government personnel observe unacceptable services, either incomplete work or required services not being performed they should immediately contact the COR.

(b) The COR will complete appropriate documentation to record the complaint.

(c) If the COR determines the complaint is invalid, the COR will advise the complainant. The COR will retain the annotated copy of the written complaint for his/her files.

(d) If the COR determines the complaint is valid, the COR will inform the Contractor and give the Contractor additional time to correct the defect, if additional time is available. The COR shall determine how much time is reasonable.

(e) The COR shall, as a minimum, orally notify the Contractor of any valid complaints.

(f) If the Contractor disagrees with the complaint after investigation of the site and challenges the validity of the complaint, the Contractor will notify the COR. The COR will review the matter to determine the validity of the complaint.

(g) The COR will consider complaints as resolved unless notified otherwise by the complainant.

(h) Repeat customer complaints are not permitted for any services. If a repeat customer complaint is received for the same deficiency during the service period, the COR will contact the Contracting Officer for appropriate action under the Inspection

18 TRANSITIONS/CONTACTS

Within 30 days after contract award, the Contracting Officer may ask the contractor to develop a plan for preparing the contractor to assume all responsibilities for preventive maintenance services. The plan shall establish the projected period for completion of all clearances of contractor

personnel, and the projected start date for performance of all services required under this contract. The plan shall assign priority to the selection of all supervisors to be used under the contract.

18.1 On site contact. The following are the designated contact personnel between the U.S. Embassy and the Contractor:

COR : Jorge Enriquez – Mexico City Embassy Electrical Engineer - enriquezj2@state.gov

The Contracting Officer Representative (COR) will be the contractor's point of contact at the U.S. Embassy, Mexico City Embassy Electrical Engineer – Jorge Enriquez. All questions concerning coordination of service activities while at post shall be directed to the COR.

Attachment A - Statement of Work
Low Voltage Diesel Standby Generator systems

1. General Information.

The United States Embassy Mexico City requires professional services and contractor cost proposals to perform preventive maintenance services of the facility's electrical switchgears.

2. Project Requirements.

The Contractor shall perform preventive maintenance as described in this Statement of Work. The objective of scheduled preventive maintenance is to eliminate system malfunction, breakdown, and deterioration when units are activated/running.

3. Description Of Equipment: Please See Attachment B For More Details.

4. General Requirements.

The Contractor shall provide the labor, tools, and materials required to perform all preventive maintenance as outlined in this SOW. Embassy staff have service manuals for switchgears on-site. The Contractor must check if all the manuals are updated and inform the COR.

5. Scope Of Work.

The Contractor shall provide all materials, supervision, labor, tools, and equipment to perform preventive maintenance. All personnel working in the vicinity shall wear and /or use appropriate safety protection while all work is performed. Any questions or injuries shall be brought to the attention of the Post COR and Occupation Safety and Health Officer (POSHO) **immediately.** Material Safety Data Sheets (MSDS) for all HAZMAT shall be provided by the Contractor. Copies shall be provided to the COR for approval.

The systems and components to be maintained include power conducting equipment such as switches, circuit breakers, fuses, and control systems such as control panels, current transformers and protective relays. The attached equipment list (Exhibit A) provides further details on the units covered by this contract

The contractor shall:

- Provide the COR with a list of necessary parts and materials.
- Provide emergency assistance for switchgear support, priced at an hourly rate, within 24 hours of being contacted by the COR.
- Provide detailed report noting any found discrepancies.
- Provide a bill of materials (BOM) to include component name, quantity, part # and price for any repair material required and material lead-time.

6. Safety & Special Instructions.

    1. Follow site safety procedures and supervisor's instructions, including JHA, USPP, and SPT forms provided by the General Services Office and POSHO.
    2. Use appropriate personal protective equipment (PPE) when performing work.
    3. Check all work areas, tools, and equipment to ensure unsafe conditions are eliminated or guarded against.
    4. Follow site safety procedures.
    5. Entries into confined spaces are subject to AIT's regulations. Any task requiring entry into a confined space must be approved by the Post Occupational Safety and Health Officer (POSHO) PRIOR TO BEGINNING WORK.
    6. Schedule maintenance with operating personnel and affected offices (security).
    7. Follow approved lockout/tag out procedures.
    8. Lockout and disconnect the main power before tightening the main supply lugs in order to avoid the hazard of electrical shock, which could result in serious personal injury or death.
    9. Review and follow the manufacturer's instructions.
    10. Record results in the equipment history log.
    11. Remove lockout/tag out in accordance with appropriate procedures.
    12. Report all incidents and near missed incidents to COR and assist as requested in the investigation and corrective action.

At a <u>minimum</u>, the above-mentioned work shall be completed.

Notes:

- Contractor shall submit to the COR for review, work sheet/checklist that will be used for performing maintenance service.
- A discrepancy report shall be submitted to the COR immediately upon discovery of any condition that could result in equipment failure.
- Test and inspection report shall be submitted to the COR within three days of completing work.
- All test sheets and reports shall be in English.

Maintenance Procedures.
The purpose of this Statement of Work is to ensure the switchgears for this facility are maintained according to manufacturer's recommendations to ensure the readiness and proper operation of the system.

Attachment B - Equipment List

EXHIBIT A. EQUIPMENT LIST

Switchgear Utility Building and New Office Building

Equipment	Manufacturer	Model	Serial Number	Capacity	Specifications
Low Voltage (480V) Metal Enclosed Switchgear LVDS-1	SCHNEIDER ELECTRIC SQUARE D	Power Zone 4 Switchgear	FACTORY ORDER 40021516-530	6000 A 100KACI	480Y/277V 3p 4w 60Hz Solidly grounded neutral, 100kA. 6000A silver plated main bus, 3R enclosure, walk-in outdoor
Low Voltage (480V) Metal Enclosed Switchgear LVDS-2	SCHNEIDER ELECTRIC SQUARE D	Power Zone 4 Switchgear	FACTORY ORDER 40021516-531	6000 A 100KACI	480Y/277V 3p 4w 60Hz Solidly grounded neutral, 100kA. 6000A copper silver plated main bus, 3R enclosure, walk-in outdoor
Low Voltage (480V) Metal Enclosed Switchgear GENSG-E-1	SCHNEIDER ELECTRIC, ASCO Power	ASCO 7000/400 Series Low Voltage Power Control System	CAT # 95113253P14	6000 A 100KACI	480Y/277V 3p 4w 60Hz, 100kA. 6000A copper silver plated main bus, NEMA 1 front and rear access
Low Voltage (480V) Metal Enclosed Switchgear GENSG-E-2	SCHNEIDER ELECTRIC ASCO Power	ASCO 7000/400 Series Low Voltage Power Control System	CAT# 95113253P14	6000A 100KACI	480Y/277V 3p 4w 60Hz, 100kA. 6000A copper silver plated main bus, NEMA 1 front and rear access
Low Voltage (480V) Metal Enclosed Switchgear GENSG-1	SCHNEIDER ELECTRIC ASCO Power	ASCO 7000/400 Series Low Voltage Power Control System	CAT # 95113253P14	6000A 100KACI	480Y/277V 3p 4w 60Hz, 100kA. 6000A copper silver plated main bus, NEMA 1 front and rear access
Low Voltage (480V) Metal Enclosed Switchgear GENSG-2	SCHNEIDER ELECTRIC ASCO Power	ASCO 7000/400 Series Low Voltage Power Control System	CAT # 95113253P14	6000A 100KACI	480Y/277V 3p 4w 60Hz, 100kA. 6000A copper silver plated main bus, NEMA 1 front and rear access

Low Voltage (480V) Metal Enclosed Switchgear GENSG-U-1	SCHNEIDER ELECTRIC ASCO Power	ASCO 7000/400 Series Low Voltage Power Control System	CAT # 95113253P14	6000A 100KACI	480Y/277V 3p 4w 60Hz, 100kA. 6000A copper silver plated main bus, NEMA 1 front and rear access
Low Voltage (480V) Metal Enclosed Switchgear GENSG-U-2	SCHNEIDER ELECTRIC ASCO Power	ASCO 7000/400 Series Low Voltage Power Control System	CAT # 95113253P14	6000A 100KACI	480Y/277V 3p 4w 60Hz, 100kA. 6000A copper silver plated main bus, NEMA 1 front and rear access
Low Voltage (480V) Metal Enclosed Switchgear UTL-SG-A	SCHNEIDER ELECTRIC SQUARE D	Power Zone 4 Switchgear	FACTORY ORDER 40021516-408	4000A 100KACI	480Y/277V 3p 4w 60Hz Solidly grounded neutral 100kA. 4000A copper silver plated main bus, Indoor type 1
Low Voltage (480V) Metal Enclosed Switchgear UTL-SG-B	SCHNEIDER ELECTRIC SQUARE D	Power Zone 4 Switchgear	FACTORY ORDER 40021516-409	4000A 100KACI	480Y/277V 3p 4w 60Hz Solidly grounded neutral 100kA. 4000A copper silver plated main bus, Indoor type 1
Low Voltage (480V) Metal Enclosed Switchgears NOB-SG-N-E	SCHNEIDER ELECTRIC SQUARE D	Power Zone 4 Switchgear	FACTORY ORDER 40021516-410	4000A 100KACI	480Y/277V 3p 4w 60Hz Solidly grounded neutral 100kA. 4000A copper silver plated main bus, Indoor type 1
Low Voltage (480V) Metal Enclosed Switchgears NOB-SG-S-U	SCHNEIDER ELECTRIC SQUARE D	Power Zone 4 Switchgear	FACTORY ORDER 40021516-410	4000A 100KACI	480Y/277V 3p 4w 60Hz Solidly grounded neutral 100kA. 4000A copper silver plated main bus, Indoor type 1
Low Voltage (480V) Metal Enclosed Switchgears NOB-SG-S-E	SCHNEIDER ELECTRIC SQUARE D	Power Zone 4 Switchgear	FACTORY ORDER 40021516-411	4000A 100KACI	480Y/277V 3p 4w 60Hz Solidly grounded neutral 100kA. 4000A copper silver plated main bus, Indoor type 1

Low Voltage (480V) Metal Enclosed Switchgears NOB-SG-S-U	SCHNEIDER ELECTRIC SQUARE D	Power Zone 4 Switchgear	FACTORY ORDER 40021516-411	4000A 100KACI	480Y/277V 3p 4w 60Hz Solidly grounded neutral 100kA. 4000A copper silver plated main bus, Indoor type 1

ATS Interconnected to Utility Building Switchgear

Equipment	Manufacturer	Model	Rating	Specifications
Automatic Transfer Switch	ASCO Power Technologies	7000 Series Catalog H07ATBA31200N5XC	1200A	1200 AMP, 3-pole, open transition, bypass isolation ATS 480V/60Hz

Attachment C – One line Diagram Utility

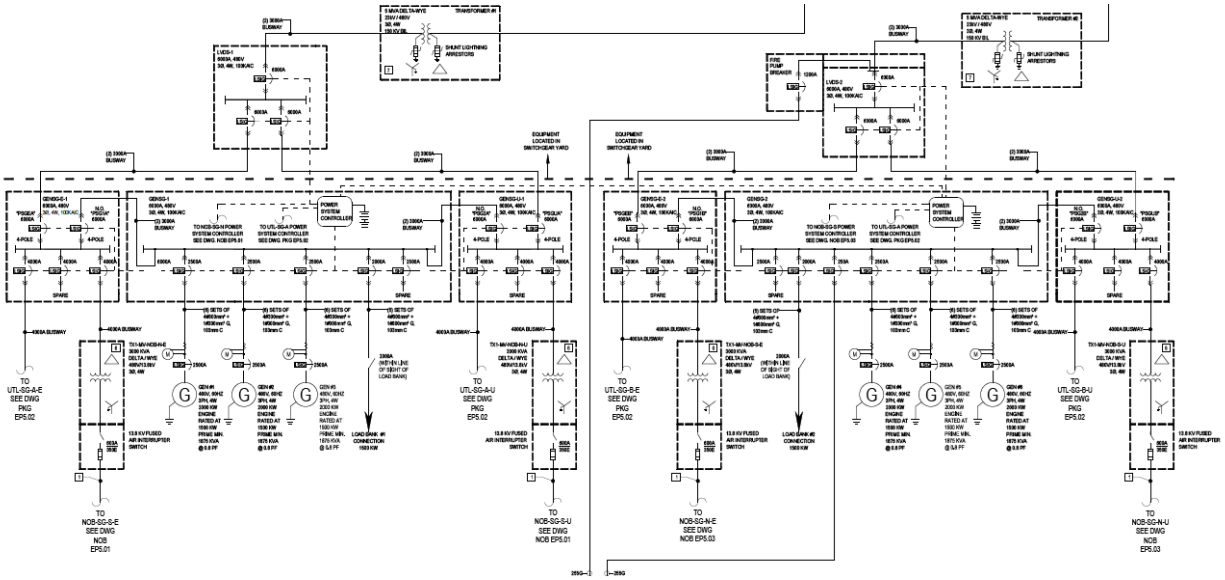

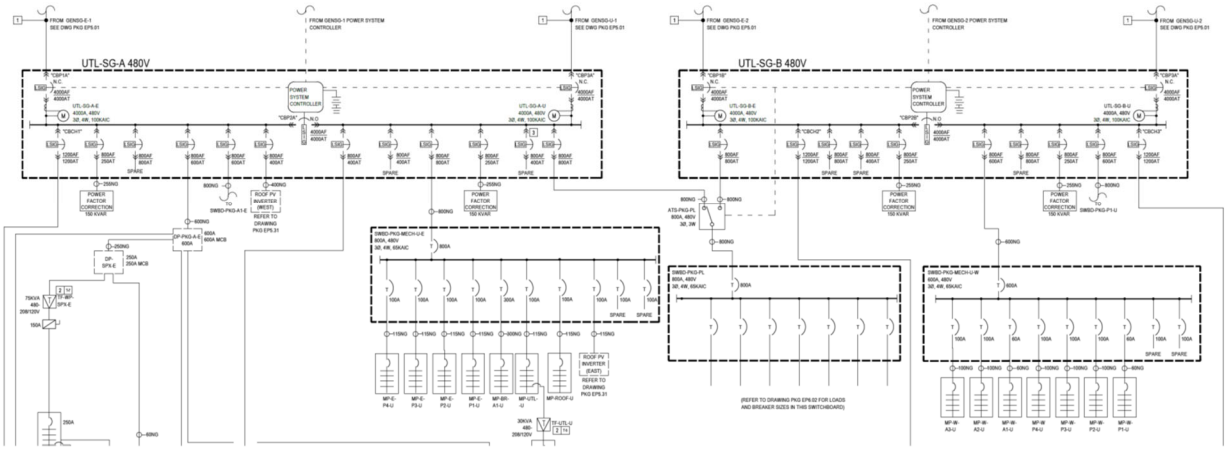

Attachment D – One line Diagram New Office Building

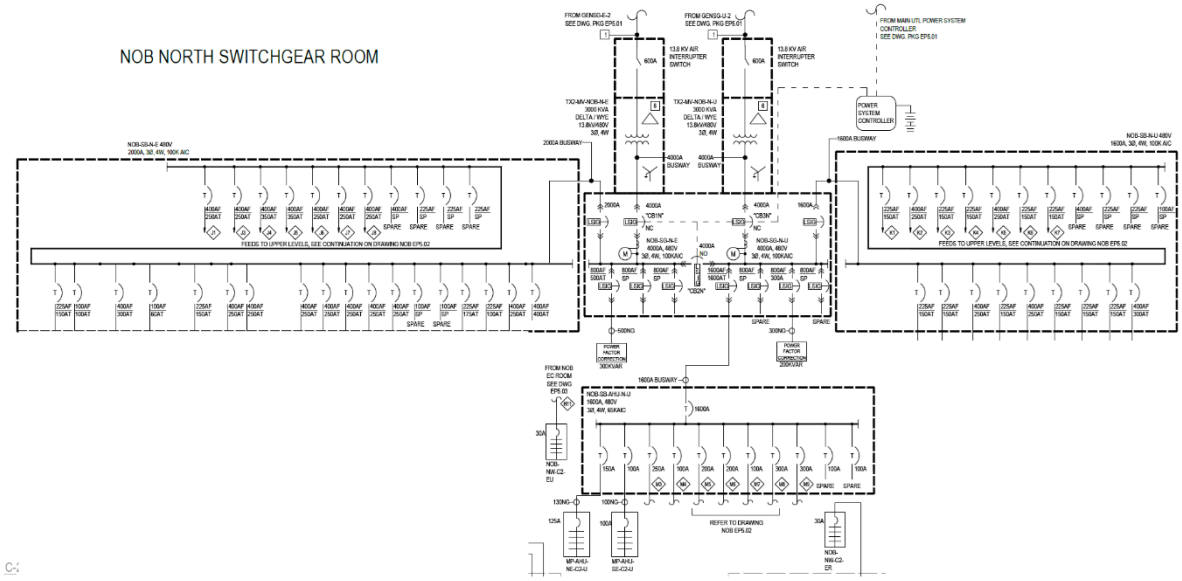

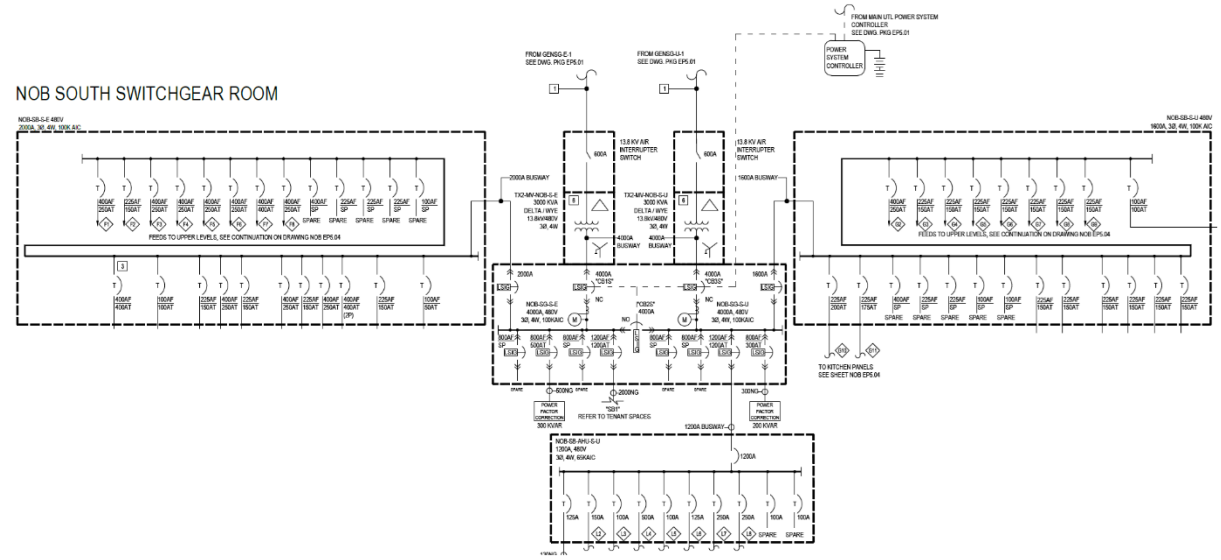

Attachment E - Payment Registration Form – Pesos

Company Information

New Registration of Account ☐ Change of Account ☐

Fiscal Name of the account holder _____
RFC (for Mexican Companies) _____
Name - Point of Contact _____
Telephone Number(s) _____
E-mail Address _____
Company Address _____
_____
_____
_____

Bank information needed for EFT transfers in Pesos, Mexican Currency.

BANK INFORMATION
Bank Name _____
CLABE Interbancaria (18 digits) _____
Currency of Account MXN

If it is a collection account, please include the reference number:

Numeric reference: _____
Alphanumeric reference: _____

_____ _____
Signature Date

FMC approval _____

Note to Offeror: This form has to be signed and attached in PDF format.

Attachment F - Payment Registration– USD to a bank in the United States

Company Information

New Registration of Account ☐ Change of Account ☐

Name of the account holder _____
Name - Point of Contact _____
Telephone Number _____
E-mail Address _____
Address _____
_____
UEI _____
Contractor US Tax ID _____

Bank information needed for EFT transfers in U.S. Dollars to a Bank in the United States

BANK INFORMATION _____
Bank Name _____
Bank Routing Number
(must be 9 digits beginning with a 0,1,2 or 3) _____
Account Number _____
Currency of Account USD

_____ _____
Signature Date

FMC approval _____

Note to Offeror: This form has to be signed and attached in PDF format.

Attachment G - Payment Registration– USD to a bank in Mexico

Company Information

New Registration of Account ☐ Change of Account ☐

Name of the account holder _____

RFC (for Mexican Companies) _____

Name - Point of Contact _____

Telephone Number _____

E-mail Address _____

Address _____

_____

_____

UEI _____

Bank information needed for EFT transfers in U.S. Dollars to a U.S. Dollar Bank Account in Mexico.

BANK INFORMATION _____

Bank Name _____

SWIFT Bank Mexico (Different from SWIFT Intermediate Bank) _____

CLABE Interbancaria (18 digits) _____

Currency of Account USD

INTERMEDIATE BANK INFORMATION _____

Bank Name _____

SWIFT Intermediate Bank (Different from SWIFT Bank Mexico) _____

_____ _____

Signature Date

FMC approval _____

Note to Offeror: This form has to be signed and attached in PDF format.

Attachment H – Vendor Portal Registration

Attachments are included as separate files as part of the Solicitation Package.

Attachment I– Safety Plan

Safety plan
template - Contractc

SECTION 2 - CONTRACT CLAUSES

52.212-4 Terms and Conditions—Commercial Products and Commercial Services.

Terms and Conditions—Commercial Products and Commercial Services (Deviation Date)

(a) *Definitions*. The clause at Federal Acquisition Regulation (FAR) 52.202-1, Definitions, is incorporated by reference.

(b) *Inspection/Acceptance*. The Contractor shall only tender for acceptance those items that conform to the requirements of this contract. The Government reserves the right to inspect or test any supplies or services that have been tendered for acceptance. The Government may require repair or replacement of nonconforming supplies or reperformance of nonconforming services at no increase in contract price. If repair/replacement or reperformance will not correct the defects or is not possible, the Government may seek an equitable price reduction or adequate consideration for acceptance of nonconforming supplies or services. The Government must exercise its post acceptance rights—

(1) Within a reasonable time after the defect was discovered or should have been discovered; and
(2) Before any substantial change occurs in the condition of the item, unless the change is due to the defect in the item.

(c) *Assignment*. The Contractor or its assignee may assign its rights to receive payment due as a result of performance of this contract to a bank, trust company, or other financing institution, including any Federal lending agency in accordance with the Assignment of Claims Act (31 U.S.C. 3727). However, when a third party makes payment (*e.g.,* use of the Governmentwide commercial purchase card), the Contractor may not assign its rights to receive payment under this contract.

(d) *Changes*. Changes in the terms and conditions of this contract may be made only by written agreement of the parties.

(e) *Disputes*. This contract is subject to 41 U.S.C. chapter 71, Contract Disputes. Failure of the parties to this contract to reach agreement on any request for equitable adjustment, claim, appeal, or action arising under or relating to this contract shall be a dispute to be resolved in accordance with the clause FAR 52.233-1, Disputes, which is incorporated in this contract by reference. The Contractor shall proceed diligently with performance of this contract, pending final resolution of any dispute arising under the contract.

(f) *Excusable delays*. The Contractor shall be liable for default unless nonperformance is caused by an occurrence beyond the reasonable control of the Contractor and without its fault or negligence. Examples of occurrences include acts of God or the public enemy, acts of the Government in either its sovereign or contractual capacity, fires, floods, epidemics, quarantine restrictions, strikes, unusually severe weather, and delays of common carriers. When an excusable delay occurs, the Contractor shall—
(1) Notify the Contracting Officer in writing as soon as possible;

(2) Remedy the delay as quickly as possible; and
(3) Notify the Contracting Officer when the occurrence is over.

(g) Invoice. The Government will handle invoices according to the Prompt Payment Act (31 U.S.C. 3903) and 5 CFR part 1315. The Contractor shall submit invoices to the address designated in the contract to receive invoices. An invoice must include the information required by 5 CFR part 1315.9(b).

(h) *Patent indemnity*. The Contractor shall indemnify the Government and its officers, employees, and agents against liability, including costs, for actual or alleged direct or contributory infringement of, or inducement to infringe, any United States or foreign patent, trademark, or copyright, arising out of the performance of this contract, provided the Contractor is reasonably notified of such claims and proceedings.

(i) *Payment*—
(1) *Items accepted*. Payment shall be made for items accepted by the Government that have been delivered to the delivery destinations set forth in this contract.
(2) *Prompt payment*. The Government will make payment in accordance with the Prompt Payment Act (31 U.S.C. 3903) and prompt payment regulations at 5 CFR part 1315.
(3) *Discount*. In connection with any discount offered for early payment, time shall be computed from the date of the invoice. For the purpose of computing the discount earned, payment shall be considered to have been made on the date that appears on the payment check or the specified payment date if an electronic funds transfer payment is made.
(4) *Overpayments*. If the Contractor becomes aware of a duplicate contract financing or invoice payment or that the Government has otherwise overpaid on a contract financing or invoice payment, the Contractor shall—
(i) Remit the overpayment amount to the payment office cited in the contract along with a description of the overpayment including the—
(A) Circumstances of the overpayment (*e.g.*, duplicate payment, erroneous payment, liquidation errors, date(s) of overpayment);
(B) Affected contract number and delivery order number, if applicable;
(C) Affected line item or subline item, if applicable;
(D) Contractor point of contact; and
(ii) Provide a copy of the remittance and supporting documentation to the Contracting Officer.

(5) *Interest*.
(i) All amounts that become payable by the Contractor to the Government under this contract shall bear simple interest from the date due until paid unless paid within 30 days of becoming due. The interest rate shall be the interest rate established by the Secretary of the Treasury as provided in 41 U.S.C. 7109, which is applicable to the period in which the amount becomes due, as provided in (i)(6)(v) of this clause, and then at the rate applicable for each six-month period as fixed by the Secretary until the amount is paid.
(ii) The Government may issue a demand for payment to the Contractor upon finding a debt is due under the contract.
(iii) *Final decisions*. The Contracting Officer will issue a final decision as required by FAR part 33 if–

(A) The Contracting Officer and the Contractor are unable to reach agreement on the existence or amount of a debt within 30 days;
(B) The Contractor fails to liquidate a debt previously demanded by the Contracting Officer within the timeline specified in the demand for payment unless the amounts were not repaid because the Contractor has requested an installment payment agreement; or
(C) The Contractor requests a deferment of collection on a debt previously demanded by the Contracting Officer (see FAR part 32).
(iv) If a demand for payment was previously issued for the debt, the demand for payment included in the final decision shall identify the same due date as the original demand for payment.
(v) Amounts shall be due at the earliest of the following dates:
(A) The date fixed under this contract.
(B) The date of the first written demand for payment, including any demand for payment resulting from a termination for cause.
(vi) The interest charge shall be computed for the actual number of calendar days involved beginning on the due date and ending on-
(A) The date on which the designated office receives payment from the Contractor;
(B) The date of issuance of a Government check to the Contractor from which an amount otherwise payable has been withheld as a credit against the contract debt; or
(C) The date on which an amount withheld and applied to the contract debt would otherwise have become payable to the Contractor.
(vii) The interest charge made under this clause may be reduced under the procedures for interest credits prescribed in FAR part 32 in effect on the date of this contract.

(j) *Risk of loss*. Unless the contract specifically provides otherwise, risk of loss or damage to the supplies provided under this contract shall remain with the Contractor until, and shall pass to the Government upon—
(1) Delivery of the supplies to a carrier, if transportation is f.o.b. origin; or
(2) Delivery of the supplies to the Government at the destination specified in the contract, if transportation is f.o.b. destination.

(k) *Taxes*. The contract price includes all applicable Federal, State, and local taxes and duties.

(l) *Termination for the Government's convenience*. The Government reserves the right to terminate this contract, or any part hereof, for its sole convenience. In the event of such termination, the Contractor shall immediately stop all work and shall immediately cause any and all of its suppliers and subcontractors to cease work. Subject to the terms of this contract, the Contractor shall be paid a percentage of the contract price reflecting the percentage of the work performed prior to the notice of termination, plus reasonable charges the Contractor can demonstrate to the satisfaction of the Government using its standard record keeping system, have resulted from the termination. The Contractor shall not be required to comply with the cost accounting standards or contract cost principles for this purpose. This paragraph does not give the Government any right to audit the Contractor's records. The Contractor shall not be paid for any work performed or costs incurred which reasonably could have been avoided.

(m) *Termination for cause*. The Government may terminate this contract, or any part hereof, for cause in the event of any default by the Contractor, or if the Contractor fails to comply with any

contract terms and conditions, or fails to provide the Government, upon request, with adequate assurances of future performance. The Government will send a cure notice to the Contractor, unless the reason for the termination is late delivery. In the event of termination for cause, the Government shall not be liable to the Contractor for any amount for supplies or services not accepted, and the Contractor shall be liable to the Government for any and all rights and remedies provided by law. If it is determined that the Government improperly terminated this contract for default, such termination shall be deemed a termination for convenience.

(n) *Title*. Unless specified elsewhere in this contract, title to items furnished under this contract shall pass to the Government upon acceptance, regardless of when or where the Government takes physical possession.

(o) *Warranty*. The Contractor warrants and implies that the items delivered under this contract are merchantable and fit for use for the particular purpose described in this contract.

(p) *Limitation of liability*. Except as otherwise provided by an express warranty, the Contractor will not be liable to the Government for consequential damages resulting from any defect or deficiencies in accepted items.

(q) *Compliance with laws unique to Government contracts*. The Contractor agrees to comply with 31 U.S.C. 1352 relating to limitations on the use of appropriated funds to influence certain Federal contracts; 40 U.S.C. chapter 37, Contract Work Hours and Safety Standards; 41 U.S.C. chapter 87, Kickbacks; 49 U.S.C. 40118, Government-financed air transportation; and 41 U.S.C. chapter 21 relating to procurement integrity.

(r) *Order of precedence*. Any inconsistencies in this solicitation or contract shall be resolved by giving precedence in the following order:
(1) The schedule of supplies/services;
(2) The Disputes, Payments, Invoice, Compliance with Laws Unique to Government Contracts, and Unauthorized Obligations paragraphs of this clause;
(3) Other contract clauses incorporated in the solicitation or contract;
(4) Addenda to this solicitation or contract;
(5) Solicitation provisions incorporated in the solicitation;
(6) Other paragraphs of this clause;
(7) Other documents, exhibits, and attachments; and
(8) The specification.

(s) *Unauthorized obligations*.
(1) Except as stated in paragraph (s)(2) of this clause, when any supply or service acquired under this contract is subject to any End User License Agreement (EULA), Terms of Service (TOS), or similar legal instrument or agreement, that includes any clause requiring the Government to indemnify the Contractor or any person or entity for damages, costs, fees, or any other loss or liability that would create an Anti-Deficiency Act violation (31 U.S.C. 1341), the following shall govern:
(i) Any such clause is unenforceable against the Government.

(ii) Neither the Government nor any Government-authorized end user shall be deemed to have agreed to such clause by virtue of it appearing in the EULA, TOS, or similar legal instrument or agreement. If the EULA, TOS, or similar legal instrument or agreement is invoked through an "I agree" click box or other comparable mechanism (e.g., "click-wrap" or "browse-wrap" agreements), execution does not bind the Government or any Government authorized end user to such clause.
(iii) Any such clause is deemed to be stricken from the EULA, TOS, or similar legal instrument or agreement.
(2) Paragraph (s)(1) of this clause does not apply to indemnification by the Government that is expressly authorized by statute and specifically authorized under applicable agency regulations and procedures.

(t) *Comptroller General examination of record*. This paragraph applies if this contract was awarded using other than sealed bid procedures and is in excess of the simplified acquisition threshold on the date of award of this contract.
(1) The Comptroller General of the United States, or an authorized representative of the Comptroller General, shall have access to and right to examine any of the Contractor's directly pertinent records involving transactions related to this contract.
(2) The Contractor shall make available at its offices, at all reasonable times, the records, materials, and other evidence for examination, audit, or reproduction, until 3 years after final payment under this contract or for any shorter period specified in FAR part 4, longer period required by statute, or periods specified in other clauses of this contract. If this contract is completely or partially terminated, the records relating to the work terminated shall be made available for 3 years after any resulting final termination settlement. Records relating to appeals under the disputes clause or to litigation or the settlement of claims arising under or relating to this contract shall be made available until such appeals, litigation, or claims are finally resolved.
(3) As used in this clause, records include books, documents, accounting procedures and practices, and other data, regardless of type and regardless of form. This clause does not require the Contractor to create or maintain any record that the Contractor does not maintain in the ordinary course of business or pursuant to a provision of law.

(u) *Incorporation by reference*. The Contractor's representations and certifications, including those completed electronically via the System for Award Management (SAM), are incorporated by reference into the contract.

(End of clause)

ADDENDUM TO CONTRACT CLAUSES
FAR AND DOSAR CLAUSES NOT PRESCRIBED IN PART 12

52.252-2 CLAUSES INCORPORATED BY REFERENCE (FEB 1998)

This contract incorporates one or more clauses by reference, with the same force and effect as if they were given in full text. Upon request, the Contracting Officer will make their full text available. In addition, the full text of a clause may be accessed electronically at: Acquisition.gov this address is subject to change.

If the Federal Acquisition Regulation (FAR) is not available at the location indicated above, use the Department of State Acquisition website at e-CFR to see the links to the FAR. You may also use an Internet "search engine" (for example, Google, Yahoo or Excite) to obtain the latest location of the most current FAR.

THE FOLLOWING FEDERAL ACQUISITION REGULATIONS (FAR) CLAUSES ARE INCORPORATED BY REFERENCE:

CLAUSE	TITLE AND DATE
52.203-17	CONTRACTOR EMPLOYEE WHISTLEBLOWER RIGHTS (NOV 2023)
52.204-9	PERSONAL IDENTITY VERIFICATION OF CONTRACTOR PERSONNEL (JAN 2011)
52.204-13	SYSTEM FOR AWARD MANAGEMENT MAINTENANCE (DEVIATION DATE)
52.204-27	PROHIBITION ON A BYTEDANCE COVERED APPLICATION (JUN 2023)
52.222-19	CHILD LABOR-COOPERATION WITH AUTHORITIES AND REMEDIES (DEVIATION DATE)
52.225-14	INCONSISTENCY BETWEEN ENGLISH VERSION AND TRANSLATION OF CONTRACT (FEB 2000)
52.228-4	WORKER'S COMPENSATION AND WAR-HAZARD INSURANCE OVERSEAS (APRIL 1984)
52.228-5	INSURANCE - WORK ON A GOVERNMENT INSTALLATION (JAN 1997)
52.229-6	TAXES - FOREIGN FIXED PRICE CONTRACTS (DATE)
52.232-39	UNENFORCEABILITY OF UNAUTHORIZED OBLIGATIONS (JUNE 2013)

52.232-40 PROVIDING ACCELERATED PAYMENTS TO SMALL BUSINESS SUBCONTRACTORS (MAR 2023)

52.244-6 SUBCONTRACTS FOR COMMERCIAL PRODUCTS AND COMMERCIAL SERVICES (DEVIATION DATE)

THE FOLLOWING FAR CLAUSES ARE PROVIDED IN FULL TEXT:

52.217-8 OPTION TO EXTEND SERVICES (NOV 1999)

The Government may require continued performance of any services within the limits and at the rates specified in the contract. The option provision may be exercised more than once, but the total extension of performance hereunder shall not exceed 6 months. The Contracting Officer may exercise the option by written notice to the Contractor within the performance period of the contract.

(End of clause)

52.217-9 OPTION TO EXTEND THE TERM OF THE CONTRACT (MAR 2000)

(a) The Government may extend the term of this contract by written notice to the Contractor within the performance period of the contract or within 30 days after funds for the option year become available, whichever is later.

(b) If the Government exercises this option, the extended contract shall be considered to include this option clause.

(c) The total duration of this contract, including the exercise of any options under this clause, shall not exceed four (4) years.

(End of clause)

52.232-19 AVAILABILITY OF FUNDS FOR THE NEXT FISCAL YEAR (APR 1984)

Funds are not presently available for performance under this contract beyond September 30 of the current calendar year. The Government's obligation for performance of this contract beyond that date is contingent upon the availability of appropriated funds from which payment for contract purposes can be made. No legal liability on the part of the Government for any payment may arise for performance under this contract beyond September 30 of the current calendar year, until funds are made available to the Contracting Officer for performance and until the Contractor receives notice of availability, to be confirmed in writing by the Contracting Officer.

(End of clause)

THE FOLLOWING DOSAR CLAUSES ARE PROVIDED IN FULL TEXT:

652.204-70 DEPARTMENT OF STATE PERSONAL IDENTIFICATION CARD ISSUANCE (FEB 2015)

(a) The Contractor shall comply with the Department of State (DOS) Personal Identification Card Policy and Procedures for all employees performing under this contract who require frequent and continuing access to DOS facilities, or information systems. The Contractor shall insert the substance of this clause in all subcontracts when the subcontractor's employees will require frequent and continuing access to DOS facilities, or information systems.

(b) The DOS Personal Identification Card Policy and Procedures may be accessed at *http://www.state.gov/m/ds/rls/rpt/c21664.htm*.

(End of clause)

CONTRACTOR IDENTIFICATION (JULY 2008)

Contract performance may require contractor personnel to attend meetings with government personnel and the public, work within government offices, and/or utilize government email.

Contractor personnel must take the following actions to identify themselves as non-federal employees:

1) Use an email signature block that shows name, the office being supported and company affiliation (e.g. "John Smith, Office of Human Resources, ACME Corporation Support Contractor");

2) Clearly identify themselves and their contractor affiliation in meetings;

3) Identify their contractor affiliation in Departmental e-mail and phone listings whenever contractor personnel are included in those listings; and

4) Contractor personnel may not utilize Department of State logos or indicia on business cards.

(End of clause)

652.215-70 EXAMINATION OF RECORDS

(a) With respect to matters related to this contract or a subcontract hereunder, the Department of State Office of the Inspector General, or an authorized representative, shall have upon request:
(1) Complete, prompt, and free access to all Contractor and Subcontractor files (in any format), documents, records, data, premises, and employees, except as limited by law; and

(2) The right to interview any current Contractor and Subcontractor personnel, individually and directly, with respect to such matters.

(b) This clause may not be construed to require the contractor or any subcontractor to create or maintain any record that the contractor or subcontractor does not maintain in the ordinary course of business or pursuant to a provision of law.

(c) The Contractor shall insert a clause containing all the terms of this clause, including this paragraph (c), in all subcontracts under this contract other than acquisitions described in Federal Acquisition Regulation 15.209(b)(1).

652.229-70 EXCISE TAX EXEMPTION STATEMENT FOR CONTRACTORS WITHIN THE UNITED STATES (JUL 1988)

This is to certify that the item(s) covered by this contract is/are for export solely for the use of the U.S. Foreign Service Post identified in the contract schedule.
The Contractor shall use a photocopy of this contract as evidence of intent to export. Final proof of exportation may be obtained from the agent handling the shipment. Such proof shall be accepted in lieu of payment of excise tax.

(End of clause)

652.232-70 PAYMENT SCHEDULE AND INVOICE SUBMISSION (FIXED-PRICE) (AUG 1999)

a) General

The Government shall pay the contractor as full compensation for all work required, performed, and accepted under this contract the firm fixed price stated in this contract.

b) Invoice Submission

The contractor shall submit invoices in electronic format to the office identified in Block 18b of the SF-1449. To constitute a proper invoice, the invoice shall include all the items required by FAR 52.232-25, 32.905(e), and the following minimum requirements:

1. Electronic Invoice.
2. Contractor's name and complete legal address.
3. Contractor's RFC.
4. Date issued.
5. Issue Invoice as follows:
   Embajada de los Estados Unidos de America
   Paseo de la Reforma 305,
   Colonia Cuauhtemoc,
   CDMX, C.P.06500
   RFC: EEU 930201 289.
6. Period of performance being charged.
7. Invoice Number

8. Account Number.
9. IVA broken down (if applicable).
10. Amounts shall be in numbers and spelled out.
11. Signed copy of the Maintenance Checklist for the work performed including parts replacement and break down calls, if any.

If an invoice does not contain the above information, the United States Government reserves the right to reject the invoice as improper and return it to the Contractor within 7 calendars days. The Contractor must then submit a proper invoice.

c) Invoice Submission Schedule and Instructions

The Contractor shall submit an invoice after each preventive maintenance service has been performed. Invoices must be accompanied by a signed copy of the Maintenance Checklist for the work performed including parts replacement and breakdown calls, if any. No invoice for preventive maintenance services will be considered for payment unless accompanied by the relevant documentation.

The Contractor should expect payment 30 days after completion of service or 30 days after receipt of invoice at the Embassy's payment office, whichever is later.

d) Address to Send Electronic Invoices

The Accounts Payable section of the U.S. Embassy has a paperless Voucher processing system known as ILMS VENDOR PORTAL. Please follow the guidelines stated in Attachment 9, to submit a payment request through the VENDOR PORTAL. Paper or emailed invoices are no longer accepted.

e) Frequency of Payments

Payment shall be made by Electronic Funds Transfer (EFT) within 30 days after receipt of the proper invoice and approval by the COR or designated GTM.

f) Contractor Remittance Address

The Government will make payment to the contractor’s address stated on the cover page of this contract, unless a separate remittance address is shown below:

_____

_____

_____

_____

(End of clause)

652.237-72 OBSERVANCE OF LEGAL HOLIDAYS AND ADMINISTRATIVE LEAVE (FEB 2015)

(a) The Department of State observes the following days as holidays:

Date	Holiday	US/Local
Jan 01	New Year's Day	US
Jan 16	Birthday of Martin Luther King, Jr.	US
Feb 18	President's Day	US
May 27	Memorial Day	US
June 19	Juneteenth	US
Jul 04	Independence Day	US
Sep 02	Labor Day	US
Oct 14	Columbus Day	US
Nov 11	Veterans Day	US
Nov 28	Thanksgiving Day	US
Dec 25	Christmas	US

Below is a list of the Mexican holidays*

Date	Holiday	US/Local
Jan 01	Año Nuevo	LOC
Feb 5	Dia de la Constitución	LOC
March 21	Benito Juarez's Birthday	LOC
March 28-29	Holy week	LOC
May 1	Dia Internacional del Trabajador	LOC
May 10	Mother's day	LOC
Sept 16	Mexico's Independency day	LOC
Nov 2	Dia de Muertos	LOC
Nov 20	Revolución Mexicana	LOC
Dec 12	Dia de la Virgen de Guadalupe	LOC
Dec 25	Christmas	LOC

*Some dates could change every year. Please check with post before scheduling the visit

Any other day designated by Federal law, Executive Order, or Presidential Proclamation.

(b) When New Year's Day, Independence Day, Veterans Day or Christmas Day falls on a Sunday, the following Monday is observed; if it falls on Saturday the preceding Friday is observed. Observance of such days by Government personnel shall not be cause for additional period of performance or entitlement to compensation except as set forth in the contract. If the contractor's personnel work on a holiday, no form of holiday or other premium compensation will be reimbursed either as a direct or indirect cost, unless authorized pursuant to an overtime clause elsewhere in this contract.

(c) When the Department of State grants administrative leave to its Government employees, assigned contractor personnel in Government facilities shall also be dismissed. However, the contractor agrees to continue to provide sufficient personnel to perform round-the-clock requirements of critical tasks already in operation or scheduled, and shall be guided by the instructions issued by the contracting officer or his/her duly authorized representative.

(d) For fixed-price contracts, if services are not required or provided because the building is closed due to inclement weather, unanticipated holidays declared by the President, failure of Congress to appropriate funds, or similar reasons, deductions will be computed as follows:

(1) The deduction rate in dollars per day will be equal to the per month contract price divided by 21 days per month.

(2) The deduction rate in dollars per day will be multiplied by the number of days services are not required or provided.

If services are provided for portions of days, appropriate adjustment will be made by the contracting officer to ensure that the contractor is compensated for services provided.

(e) If administrative leave is granted to contractor personnel as a result of conditions stipulated in any "Excusable Delays" clause of this contract, it will be without loss to the contractor. The cost of salaries and wages to the contractor for the period of any such excused absence shall be a reimbursable item of direct cost hereunder for employees whose regular time is normally charged, and a reimbursable item of indirect cost for employees whose time is normally charged indirectly in accordance with the contractors accounting policy.

(End of clause)

652.242-70 CONTRACTING OFFICER'S REPRESENTATIVE (COR) AUG 1999)

(a) The Contracting Officer may designate in writing one or more Government employees, by name or position title, to take action for the Contracting Officer under this contract. Each designee shall be identified as a Contracting Officer's Representative (COR). Such designation(s) shall specify the scope and limitations of the authority so delegated; provided, that the designee shall not change the terms or conditions of the contract, unless the COR is a warranted Contracting Officer and this authority is delegated in the designation.

(a) The COR for this contract is the Electrical Engineer.

(End of clause)

652.242-73 AUTHORIZATION AND PERFORMANCE (AUG 1999)

(a) The Contractor warrants the following:

(1) That is has obtained authorization to operate and do business in the country or countries in which this contract will be performed;

(2) That is has obtained all necessary licenses and permits required to perform this contract; and,

(3) That it shall comply fully with all laws, decrees, labor standards, and regulations of said country or countries during the performance of this contract.

(b) If the party actually performing the work will be a subcontractor or joint venture partner, then such subcontractor or joint venture partner agrees to the requirements of paragraph (a) of this clause.

652.243-70 NOTICES (AUG 1999)

Any notice or request relating to this contract given by either party to the other shall be in writing. Said notice or request shall be mailed or delivered by hand to the other party at the address provided in the schedule of the contract. All modifications to the contract must be made in writing by the Contracting Officer.

52.240-91 Security Prohibitions and Exclusions

Security Prohibitions and Exclusions (Deviation Date)

(a) *Definitions.* As used in this clause—
American Security Drone Act-covered foreign entity means an entity included on a list that the Federal Acquisition Security Council (FASC) develops and maintains and publishes in the System for Award Management (SAM) at https://www.sam.gov (section 1822 of Pub. L. 118-31, 41 U.S.C. 3901 note prec.).
Backhaul means intermediate links between the core network, or backbone network, and the small subnetworks at the edge of the network (e.g., connecting cell phones/towers to the core telephone network). Backhaul can be wireless (e.g., microwave) or wired (e.g., fiber optic, coaxial cable, Ethernet).
Covered application means the social networking service TikTok or any successor application or service developed or provided by ByteDance Limited or an entity owned by ByteDance Limited.
Covered article, as defined in 41 U.S.C. 4713(k), means:
(1) Information technology, as defined in 40 U.S.C. 11101, including cloud computing services of all types;
(2) Telecommunications equipment or telecommunications service, as those terms are defined in section 3 of the Communications Act of 1934 (47 U.S.C. 153);
(3) The processing of information on a Federal or non-Federal information system, subject to the requirements of the Controlled Unclassified Information program (see 32 CFR part 2002); or
(4) Hardware, systems, devices, software, or services that include embedded or incidental information technology.

Covered foreign country means The People's Republic of China.
Covered telecommunications equipment or services means—
(1) Telecommunications equipment produced by Huawei Technologies Company or ZTE Corporation (or any subsidiary or affiliate of such entities);
(2) For the purpose of public safety, security of Government facilities, physical security surveillance of critical infrastructure, and other national security purposes, video surveillance and telecommunications equipment produced by Hytera Communications Corporation, Hangzhou Hikvision Digital Technology Company, or Dahua Technology Company (or any subsidiary or affiliate of such entities);
(3) Telecommunications or video surveillance services provided by such entities or using such equipment; or
(4) Telecommunications or video surveillance equipment or services produced or provided by an entity that the Secretary of Defense, in consultation with the Director of National Intelligence or the Director of the Federal Bureau of Investigation, reasonably believes to be an entity owned or controlled by, or otherwise connected to, the government of a covered foreign country.

Critical technology means—
(1) Defense articles or defense services included on the United States Munitions List set forth in the International Traffic in Arms Regulations under subchapter M of chapter I of title 22, Code of Federal Regulations;
(2) Items included on the Commerce Control List set forth in Supplement No. 1 to part 774 of the Export Administration Regulations under subchapter C of chapter VII of title 15, Code of Federal Regulations, and controlled—
(i) Pursuant to multilateral regimes, including for reasons relating to national security, chemical and biological weapons proliferation, nuclear nonproliferation, or missile technology; or
(ii) For reasons relating to regional stability or surreptitious listening;
(3) Specially designed and prepared nuclear equipment, parts and components, materials, software, and technology covered by part 810 of title 10, Code of Federal Regulations (relating to assistance to foreign atomic energy activities);
(4) Nuclear facilities, equipment, and material covered by part 110 of title 10, Code of Federal Regulations (relating to export and import of nuclear equipment and material);
(5) Select agents and toxins covered by part 331 of title 7, Code of Federal Regulations, part 121 of title 9 of such Code, or part 73 of title 42 of such Code; or
(6) Emerging and foundational technologies controlled pursuant to section 1758 of the Export Control Reform Act of 2018 (50 U.S.C. 4817).

FASC-prohibited unmanned aircraft system means an unmanned aircraft system manufactured or assembled by an American Security Drone Act—covered foreign entity.
FASCSA order means any of the following orders issued under the Federal Acquisition Supply Chain Security Act (FASCSA) requiring removing covered articles from executive agency information systems or excluding one or more named sources or named covered articles from executive agency procurement actions, as described in 41 CFR 201-1.303(d) and (e):
(1) The Secretary of Homeland Security may issue FASCSA orders that apply to civilian agencies, to the extent not covered by paragraph (2) or (3) of this definition. This type of FASCSA order may be referred to as a Department of Homeland Security (DHS) FASCSA order.

(2) The Secretary of Defense may issue FASCSA orders that apply to the Department of Defense (DoD) and national security systems other than sensitive compartmented information systems. This type of FASCSA order may be referred to as a DoD FASCSA order.
(3) The Director of National Intelligence (DNI) may issue FASCSA orders that apply to the intelligence community and sensitive compartmented information systems, to the extent not covered by paragraph (2) of this definition. This type of FASCSA order may be referred to as a DNI FASCSA order.

Information technology, as defined in 40 U.S.C. 11101(6)—
(1) Means any equipment or interconnected system or subsystem of equipment, used in the automatic acquisition, storage, analysis, evaluation, manipulation, management, movement, control, display, switching, interchange, transmission, or reception of data or information by the executive agency, if the equipment is used by the executive agency directly or is used by a contractor under a contract with the executive agency that requires the use—
(i) Of that equipment; or
(ii) Of that equipment to a significant extent in the performance of a service or the furnishing of a product;
(2) Includes computers, ancillary equipment (including imaging peripherals, input, output, and storage devices necessary for security and surveillance), peripheral equipment designed to be controlled by the central processing unit of a computer, software, firmware and similar procedures, services (including support services), and related resources; but
(3) Does not include any equipment acquired by a Federal contractor incidental to a Federal contract.

Intelligence community, as defined by 50 U.S.C. 3003(4), means the following—
(1) The Office of the Director of National Intelligence;
(2) The Central Intelligence Agency;
(3) The National Security Agency;
(4) The Defense Intelligence Agency;
(5) The National Geospatial-Intelligence Agency;
(6) The National Reconnaissance Office;
(7) Other offices within the Department of Defense for the collection of specialized national intelligence through reconnaissance programs;
(8) The intelligence elements of the Army, the Navy, the Air Force, the Marine Corps, the Coast Guard, the Federal Bureau of Investigation, the Drug Enforcement Administration, and the Department of Energy;
(9) The Bureau of Intelligence and Research of the Department of State;
(10) The Office of Intelligence and Analysis of the Department of the Treasury;
(11) The Office of Intelligence and Analysis of the Department of Homeland Security; or
(12) Such other elements of any department or agency as may be designated by the President, or designated jointly by the Director of National Intelligence and the head of the department or agency concerned, as an element of the intelligence community.

Interconnection arrangements means arrangements governing the physical connection of two or more networks to allow the use of another's network to hand off traffic where it is ultimately

delivered (e.g., connecting a customer of telephone provider A to a customer of telephone company B) or sharing data and other information resources.
Kaspersky Lab-covered article means any hardware, software, or service that—
(1) Is developed or provided by a Kaspersky Lab-covered entity;
(2) Includes any hardware, software, or service developed or provided in whole or in part by a Kaspersky Lab-covered entity; or
(3) Contains components using any hardware or software developed in whole or in part by a Kaspersky Lab-covered entity.

Kaspersky Lab-covered entity means—
(1) Kaspersky Lab;
(2) Any successor entity to Kaspersky Lab, including any change in name, e.g., "Kaspersky";
(3) Any entity that controls, is controlled by, or is under common control with Kaspersky Lab; or
(4) Any entity of which Kaspersky Lab has a majority ownership.

National security system, as defined in 44 U.S.C. 3552, means any information system (including any telecommunications system) used or operated by an agency or by a contractor of an agency, or other organization on behalf of an agency—
(1) The function, operation, or use of which involves intelligence activities; involves cryptologic activities related to national security; involves command and control of military forces; involves equipment that is an integral part of a weapon or weapons system; or is critical to the direct fulfillment of military or intelligence missions, but does not include a system that is to be used for routine administrative and business applications (including payroll, finance, logistics, and personnel management applications); or
(2) Is protected at all times by procedures established for information that have been specifically authorized under criteria established by an Executive order or an Act of Congress to be kept classified in the interest of national defense or foreign policy.

Roaming means cellular communications services (e.g., voice, video, data) received from a visited network when unable to connect to the facilities of the home network either because signal coverage is too weak or because traffic is too high.
Sensitive compartmented information means classified information concerning or derived from intelligence sources, methods, or analytical processes, which is required to be handled within formal access control systems established by the Director of National Intelligence.
Sensitive compartmented information system means a national security system authorized to process or store sensitive compartmented information.
Source means a non-Federal supplier, or potential supplier, of products or services, at any tier.
Subsidiary means an entity in which more than 50 percent of the entity is owned directly by a parent corporation or through another subsidiary of a parent corporation.
Substantial or essential component means any component necessary for the proper function or performance of a piece of equipment, system, or service.
Unmanned aircraft means an aircraft that is operated without the possibility of direct human intervention from within or on the aircraft (49 U.S.C. 44801(11)).
Unmanned aircraft system means an unmanned aircraft and associated elements (including communication links and the components that control the unmanned aircraft) that are required for the operator to operate safely and efficiently in the national airspace system (49 U.S.C. 44801(12)).

(b) *Prohibitions on providing or using specific products or services in performance of contract*. Unless a waiver or exception applies, the Contractor is prohibited from providing any products or services to the Government or using in the performance of the contract any of the following:
(1) A covered application on any information technology owned or managed by the Government, or on any information technology used or provided by the Contractor under this contract, including equipment provided by the Contractor's employees (section 102 of Division R of the Consolidated Appropriations Act, 2023 (Pub. L. 117-328));
(2) A Kaspersky Lab-covered article (Section 1634 of Division A of the National Defense Authorization Act for Fiscal Year 2018 (Pub. L. 115-91));
(3) Covered telecommunications equipment or services used as a substantial or essential component of any system, or as critical technology as part of any system (paragraphs (a)(1)(A) of section 889 of the John S. McCain National Defense Authorization Act for Fiscal Year 2019 (Pub. L. 115-232)). This does not prohibit contractors from providing—
(i) A service that connects to the facilities of a third-party, such as backhaul, roaming, or interconnection arrangements; or
(ii) Telecommunications equipment that cannot route or redirect user data traffic or cannot permit visibility into any user data or packets that such equipment transmits or otherwise handles.
(c) Prohibition on unmanned aircraft systems manufactured or assembled by American Security Drone Act—covered foreign entities.
(1) Prohibition. The Contractor is prohibited from—
(i) Delivering any FASC-prohibited unmanned aircraft system, which includes unmanned aircraft (i.e., drones) and associated elements (sections 1823 and 1826 of American Security Drone Act of 2023, within the National Defense Authorization Act for Fiscal Year 2024, Pub. L. 118-31, Div. A, Title XVIII, Subtitle B, 41 U.S.C. 3901 note prec.);
(ii) On or after December 22, 2025, operating a FASC-prohibited unmanned aircraft system in the performance of the contract (section 1824 of Pub. L. 118-31); and
(iii) On or after December 22, 2025, using Federal funds to procure or operate a FASC-prohibited unmanned aircraft system (section 1825 of Pub. L. 118-31).
(2) *Procedures*. The Contractor shall search SAM for the FASC-maintained list of American Security Drone Act—covered foreign entities before proposing, or using in performance of the contract, any unmanned aircraft system. Also, the Contractor shall ensure any effort or expenditure associated with a FASC-prohibited unmanned aircraft system is consistent with a corresponding exemption, exception, or waiver determination expressly stated in the contract.
(3) *Exemptions, exceptions, and waivers*. The prohibitions in paragraph (c) of this clause do not apply where the agency has determined an exemption, exception, or waiver applies, and the contract indicates that such a determination has been made. See sections 1823 through 1825 and 1832 of Public Law 118-31 for statutory requirements pertaining to exemptions, exceptions, and waivers.
(d) *Prohibition on using or providing specific products or services or conducting certain transactions regardless of connection to contract*.
(1) *Certain telecommunications and video surveillance equipment, systems, or services*.
(i) Unless an applicable waiver has been issued by the Government, the Contractor cannot use any equipment, systems, or services that uses covered telecommunications equipment or services as a substantial or essential component of any system, or as critical technology as part of any system (paragraph (a)(1)(B) of section 889 of the John S. McCain National Defense Authorization Act for Fiscal Year 2019 (Pub. L. 115-232)).

(ii) This prohibition applies to using covered telecommunications equipment or services, regardless of whether that use is in performance of work under a Federal contract. This does not prohibit the contractor from using—
(A) A service that connects to the facilities of a third party, such as backhaul, roaming, or interconnection arrangements; or
(B) Telecommunications equipment that cannot route or redirect user data traffic or cannot permit visibility into any user data or packets that such equipment transmits or otherwise handles.
(2) *Office of Foreign Assets Control Restrictions*.
(i) Except as authorized by the Office of Foreign Assets Control (OFAC) in the Department of the Treasury, the Contractor shall not acquire, for use in the performance of this contract, any supplies or services if any proclamation, Executive order, or statute administered by OFAC, or if OFAC's implementing regulations at 31 CFR chapter V, would prohibit such a transaction by a person subject to the jurisdiction of the United States.
(ii) Except as authorized by OFAC, most transactions involving Cuba, Iran, and Sudan are prohibited, as are most imports from Burma or North Korea, into the United States or its outlying areas.
(A) For lists of entities and individuals subject to economic sanctions, see OFAC's List of Specially Designated Nationals and Blocked Persons at https://home.treasury.gov/policy-issues/financial-sanctions/specially-designated-nationals-and-blocked-persons-list-sdn-human-readable-lists.
(B) For more information about these restrictions, as well as updates, see OFAC's regulations at 31 CFR chapter V and at https://home.treasury.gov/policy-issues/office-of-foreign-assets-control-sanctions-programs-and-information.
(C) To conduct electronic screens of potential parties to regulated transactions, see the consolidated screening list at https://www.trade.gov/consolidated-screening-list, which consolidates multiple export screening lists of the Departments of Commerce, State, and the Treasury.
(3) *Sudan prohibition*. The Contractor is prohibited from conducting any restricted business operations in Sudan in accordance with Accountability and Divestment Act of 2007 (Pub. L. 110-174).
(4) *Iran prohibitions*.
(i) Unless an exception applies according to paragraph (d)(4)(iii) or the Government grants a waiver, the contractor shall not engage in certain activities or transactions relating to Iran (section 6(b)(1)(A) of Iran Sanctions Act (50 U.S.C. 1701 note).
(ii) Unless an exception applies according to paragraph (d)(4)(iii) or the Government grants a waiver, contractor shall not export certain sensitive technology to Iran, as determined by the President, and has an active exclusion in SAM (22 U.S.C. 8515).
(iii) The prohibition in paragraphs (d)(4)(i) and (d)(4)(ii) do not apply if the acquisition is subject to trade agreements and the offeror certifies that all the offered products are designated country end products or designated country construction material (see part 25).
(iv) Unless an exception applies or the Government grants a waiver, contractors are prohibited from knowingly engaging in any significant transaction (i.e., over $15,000) with Iran's Revolutionary Guard Corps or any of its officials, agents, or affiliates, the property and interests in property of which are blocked according to the International Emergency Economic Powers Act (section 6(b)(1)(B) of Iran Sanctions Act (50 U.S.C. 1701 note)).
(e) *Governmentwide exclusion and removal orders*.

(1) Unless the Government has issued an applicable waiver, contractors shall not provide or use as part of the performance of the contract any covered article, or any products or services produced or provided by a source, if the covered article or the source is prohibited by an applicable FASCSA order as follows:
(i) For solicitations and contracts awarded by a Department of Defense contracting office, DoD FASCSA orders apply.
(ii) For all other solicitations and contracts, DHS FASCSA orders apply.
(2) The Contractor shall search for the phrase "FASCSA order" in the System for Award Management (SAM) at https://www.sam.gov to locate applicable FASCSA orders.
(3) The Government may identify in the solicitation other FASCSA orders that are not in SAM, which are effective and apply to the solicitation and resulting contract.
(4) A FASCSA order issued after the date of solicitation applies to this contract only if added by an amendment to the solicitation or modification to the contract (see FAR 40.204-1(c)).
(f) *Reasonable inquiry*. The contractor shall conduct a reasonable inquiry to determine if there are any prohibited products or services. The inquiry will look at any information in the entity's possession but does not need to include an internal or third-party audit.
(g) *Removal of prohibited products and services*. For Federal Supply Schedules, Governmentwide acquisition contracts, multi-agency contracts or any other procurement instrument intended for use by multiple agencies, upon notification from the Contracting Officer, during the performance of the contract, the Contractor shall promptly make any necessary changes or modifications to remove any product or service produced or provided by a source that this clause prohibits.
(h) *General report*.
(1) If the Contractor identifies or is notified by any source, (including a subcontractor at any tier), that any product or service provided or used (or to be provided or used) during contract performance does not comply with any prohibition in this clause, then the Contractor shall report the following information, or as much information is known, in writing to the contracting office as identified in paragraph (h)(2) within 72 hours:
(i) Contract number and order number, if applicable;
(ii) The specific prohibition the product or service is not complying with;
(iii) A description of the products or services that the Contractor identifies or has reason to suspect is prohibited (include brand; model number, such as the original equipment manufacturer (OEM) number, manufacturer part number, or wholesaler number; and item description, as applicable);
(iv) The entity that produced the product or service (include entity name, unique entity identifier, Contractor and Government Entity (CAGE) code, facilities responsible for design, fabrication, assembly, packaging, and test of the product, and whether the entity was the OEM or a distributor (provide manufacturer codes and distributor codes used for the product));
(v) Description of the functionality of the product or service and how that functionality impacts the risk to the product or service;
(vi) An explanation of any factors relevant to determining if the product or service should be permitted by an applicable exception, exemption, or waiver (if the contractor would like the Government to consider a waiver, and asks for such a waiver);
(vii) Whether alternative products or services are available that would comply with the prohibition;
(viii) If the product or service is related to item maintenance, include the following information on the item being maintained:
(A) Brand;
(B) Model number, OEM number, manufacturer part number, or wholesaler number; and

(C) Item description, as applicable.
(ix) Any readily available information about mitigation actions implemented or recommended.
(2) If a report must be submitted to a contracting office, the Contractor shall submit the report as follows:
(i) If a Department of Defense contracting office, the Contractor shall report to the website at https://dibnet.dod.mil.
(ii) For all other contracting offices, the Contractor shall report to the Contracting Officer.
(iii) For indefinite delivery contracts, the Contractor shall report to both the contracting office for the indefinite delivery contract and the contracting office for any affected order.
(3) If the report provided does not contain any of the information required by paragraph (h)(1) of this clause, and the contractor later discovers new information that is required by paragraph (h)(1) of this clause, then the contractor shall submit a subsequent report within 72 hours of discovering the new information.
(4) The contractor shall also report the information in paragraph (h)(1) if the contractor wishes to ask for a waiver of the requirements of a new FASCSA order being applied through modification.
(i) *New FASCSA orders report*.
(1) During contract performance, the Contractor shall review SAM at least once every three months, or as advised by the Contracting Officer, to check for covered articles subject to FASCSA order(s), or for products or services produced by a source subject to FASCSA order(s) not currently identified under paragraph (e) of this clause.
(2) If the Contractor identifies a new FASCSA order(s) that could impact their supply chain, then the Contractor shall conduct a reasonable inquiry to identify whether a covered article or product or service produced or provided by a source subject to the FASCSA order(s) was provided to the Government or used during contract performance. The inquiry will look at any information in the entity's possession but does not need to include an internal or third-party audit.
(3) The Contractor shall submit a report to the contracting office identified in paragraph (h)(2) of this clause if the Contractor identifies, including through any notification by a subcontractor at any tier, that a covered article or product or service produced or provided by a source was provided to the Government or used during contract performance and is subject to a FASCSA order(s). For indefinite delivery contracts, the Contractor shall report to both the contracting office for the indefinite delivery contract and the contracting office for any affected order. The Contractor shall report the following information within 72 hours for each covered article or each product or service produced or provided by a source, where the covered article or source is subject to a FASCSA order:
(i) Contract number and order number, if applicable;
(ii) Name of the covered article or source subject to a FASCSA order;
(iii) The specific FASCSA order the product or service does not comply with;
(iv) The elements of (h)(1)(iii) through (ix) of this clause.
(j) Subcontracts. The Contractor shall insert the substance of this clause, including this paragraph (j) but excluding subparagraphs (d)(1) and (i)(1), in all subcontracts and other contractual instruments, including subcontracts for acquiring commercial products or commercial services.

(End of clause)

SETION 3 - SOLICITATION PROVISIONS

52.212-1 INSTRUCTIONS TO OFFERORS- COMMERCIAL PRODUCTS AND COMMERCIAL SERVICES

Instructions to Offerors—Commercial Products and Commercial Services (Deviation Date)

(a) *Submission of offers*. Submit signed and dated offers to the office specified in this solicitation at or before the exact time specified in this solicitation. As a minimum, offers shall include—

(1) The solicitation number;

(2) The name, address, telephone number of the Offeror;

(3) The Offeror's Unique Entity Identifier (UEI) and, if applicable, Electronic Funds Transfer (EFT) indicator;

(4) Information necessary to evaluate the factors contained in the provision at 52.212-2 or as described in the solicitation;

(5) Responses to provisions that require Offeror completion of information, representations, and certifications (other than those collected via the System for Award Management (SAM)); and

(6) A statement specifying the extent of agreement with all terms, conditions, and provisions included in the solicitation and any solicitation amendments.

(b) *Period for acceptance of offers*. The Offeror agrees to hold the prices in its offer firm for 60 calendar days from the date specified for receipt of offers, unless another time period is specified in an addendum to the solicitation.

(c) *Late submissions, modifications, revisions, and withdrawals of offers*.

(1) Offerors are responsible for submitting offers and any modifications or revisions to the Government office designated in the solicitation by the time specified in the solicitation.

(2) Any offer, modification, or revision received after the time specified for receipt of offers is "late" and will not be considered unless it is received before award is made and the Contracting Officer determines that accepting the late offer would not unduly delay the acquisition. However, a late modification of an otherwise successful offer that makes its terms more favorable to the Government will be considered at any time it is received and may be accepted.

(3) If an emergency or unanticipated event interrupts normal Government processes so that offers cannot be received at the Government office designated for receipt of offers by the exact time specified in the solicitation, and urgent Government requirements preclude amendment of the solicitation or other notice of an extension of the closing date, the time specified for receipt of offers will be deemed to be extended to the same time of day specified in the solicitation on the first work day on which normal Government processes resume.

(4) Offerors may withdraw their offers by written notice to the Government received at any time before award.

(d) *Contract award (not applicable to Invitation for Bids)*. The Government intends to evaluate offers and award a contract without discussions with Offerors. Therefore, the Offeror's initial offer should contain the Offeror's best terms. However, the

Government reserves the right to conduct discussions, if necessary. The Government may reject any or all offers if such action is in the public interest, accept other than the lowest offer, and waive informalities and minor irregularities in offers received.

(e) *Debriefings*. If a postaward debriefing is given to requesting Offerors, the Government will disclose the following information, if applicable:

(1) The agency's evaluation of the significant weak or deficient factors in the debriefed Offeror's offer.

(2) The overall evaluated cost or price and technical rating of the successful Offeror and the debriefed Offeror and past performance information on the debriefed Offeror.

(3) The overall ranking of all Offerors when any ranking was developed by the agency during source selection.

(4) A summary of the rationale for award.

(5) For acquisitions of commercial products, the make and model of the product to be delivered by the successful Offeror.

(6) Reasonable responses to relevant questions posed by the debriefed Offeror as to whether the agency followed source-selection procedures set forth in the solicitation, applicable regulations, and other applicable authorities.

(End of provision)

ADDENDUM TO SOLICITATION PROVISIONS
FAR AND DOSAR PROVISIONS NOT PRESCRIBED IN PART 12

THE FOLLOWING FEDERAL ACQUISITION REGULATION SOLICITATION PROVISIONS ARE INCORPORATED BY REFERENCE:

PROVISION TITLE AND DATE

52.204-7 SYSTEM FOR AWARD MANAGEMENT—REGISTRATION (DEVIATION DATE)

52.212-1 INSTRUCTIONS TO OFFERORS -- COMMERCIAL PRODUCTS AND COMMERCIAL SERVICES (DEVIATION DATE)

52.214-34 SUBMISSION OF OFFERS IN THE ENGLISH LANGUAGE (APR 1991)

52.233-2 SERVICE OF PROTEST (SEP 2006)

a) Protests, as defined in section 33.101 of the Federal Acquisition Regulation, that are filed directly with an agency, and copies of any protests that are filed with the General Accounting Office (GAO) shall be served on the Contracting Officer (addressed as follows) by obtaining written and dated acknowledgment of receipt from the Head of Contracting Activity of the U.S. Embassy Mexico City.

b) The copy of any protest shall be received in the office designated above within one day of filing a protest with the GAO.

THE FOLLOWING DOSAR PROVISION(S) IS/ARE PROVIDED IN FULL TEXT:

652.206-70 ADVOCATE FOR COMPETITION/OMBUDSMAN (FEB 2015)

(a) The Department of State's Advocate for Competition is responsible for assisting industry in removing restrictive requirements from Department of State solicitations and removing barriers to full and open competition and use of commercial items. If such a solicitation is considered competitively restrictive or does not appear properly conducive to competition and commercial practices, potential offerors are encouraged first to contact the contracting office for the solicitation. If concerns remain unresolved, contact:

(1) For solicitations issued by the Office of Acquisition Management (A/GA/AMD) or a Regional Procurement Support Office, the A/GA/AMD Advocate for Competition, at AQMCompetitionAdvocate@state.gov.

(2) For all others, the Department of State Advocate for Competition at cat@state.gov.

(b) The Department of State's Acquisition Ombudsman has been appointed to hear concerns from potential offerors and contractors during the pre-award and post-award phases of this acquisition. The role of the ombudsman is not to diminish the authority of the contracting officer, the Technical Evaluation Panel or Source Evaluation Board, or the selection official. The purpose of the ombudsman is to facilitate the communication of concerns, issues, disagreements, and recommendations of interested parties to the appropriate Government personnel, and work to resolve them. When requested and appropriate, the ombudsman will maintain strict confidentiality as to the source of the concern. The ombudsman does not participate in the evaluation of quotes, the source selection process, or the adjudication of formal contract disputes. Interested parties are invited to contact the contracting activity ombudsman, Minister Counselor for Management Affairs, at 5080-2300. For an American Embassy or overseas post, refer to the numbers below for the Department Acquisition Ombudsman. Concerns, issues, disagreements, and recommendations which cannot be resolved at a contracting activity level may be referred to the Department of State Acquisition Ombudsman at (703) 516-1696 or write to: Department of State, Acquisition Ombudsman, Office of Global Acquisitions (A/GA), Suite 1060, SA-15, Washington, DC 20520.

(End of provision)

3.1 PRE-PROPOSAL CONFERENCE

3.1.1 Date and Time.

A site visit to discuss the requirements of this solicitation will be held on June 10, 2026, at 11:00 hours (Mexico City Time) Prospective offerors/quoters should contact the Contracting team at MexicoCityGSOSolicitations@groups.state.gov for additional information.

3.2 QUESTIONS & ANSWERS

Oral questions will not be answered. Questions related to this Solicitation shall be submitted in writing and in English language. All questions shall refer to the page number, section, paragraph, and sentence of the solicitation to prevent confusions.

3.2.1 Questions and Answers Before Site Visit.

Offerors are urged to submit written questions at least three (3) days before the scheduled pre-proposal conference date using the email address below:

MexicoCityGSOSolicitations@groups.state.gov

3.2.2 Questions at the Site Visit.

The Government will try to answer all questions submitted before the Site Visit. Attendees may also ask additional questions at the site visit; however, if any answer requires further research, there is no guarantee that the question will be answered at the visit.

3.2.3 Government Statements at the Site Visit.

The Government's statements at the pre-proposal conference shall not be considered to be a change to the solicitation unless a written amendment is issued.

3.2.4 Deadline to Submit Questions.

The deadline to submit a questions is June 18, 2026, before 11:00 hours. (Mexico City Time).

3.2.5 Posting of Questions and Answers

Following the questions deadline, questions and answers will be posted on SAM.gov (https://sam.gov/content/opportunities). All prospective offerors will be able to download all questions presented in writing prior, during and after the pre-proposal conference, along with answers. If the answer requires a change to the solicitation, a solicitation amendment will also be issued and posted.

SECTION 4 - EVALUATION FACTORS

4.1 Award will be made to the lowest priced, acceptable, responsible offeror. The quoter shall submit a completed solicitation, including Sections 1 and 5.

1.2 The Government reserves the right to reject quotes that are unreasonably low or high in price.

1.3 The lowest price will be determined by multiplying the offered prices times the estimated quantities in "Prices - Continuation of SF-1449, block 23", and arriving at a grand total, including all options.

1.4 The Government will determine acceptability by assessing the offeror's compliance with the terms of the RFQ to include the technical information required by Section 3.

1.5 The Government will determine contractor responsibility by analyzing whether the apparent successful offeror complies with the requirements of FAR 9.1, including:

- Adequate financial resources or the ability to obtain them;
- Ability to comply with the required performance period, taking into consideration all existing commercial and governmental business commitments;
- Satisfactory record of integrity and business ethics;
- Necessary organization, experience, and skills or the ability to obtain them;
- Necessary equipment and facilities or the ability to obtain them; and
- Be otherwise qualified and eligible to receive an award under applicable laws and regulations.

ADDENDUM TO EVALUATION FACTORS
FAR AND DOSAR PROVISION(S) NOT PRESCRIBED IN PART 12

THE FOLLOWING FAR PROVISION(S) IS/ARE PROVIDED IN FULL TEXT:

52.217-5 EVALUATION OF OPTIONS (DEVIATION DATE)

Except when it is determined in accordance with FAR 17.202(b) not to be in the Government's best interests, the Government will evaluate offers for award purposes by adding the total price for all options to the total price for the basic requirement. Evaluation of options will not obligate the Government to exercise the option(s).

(End of provision)

52.225-17 EVALUATION OF FOREIGN CURRENCY OFFERS (FEB 2000)

If the Government receives offers in more than one currency, the Government will evaluate offers by converting the foreign currency to United States currency using the exchange rate used by the Embassy in effect as follows:

(a) For acquisitions conducted using sealed bidding procedures, on the date of bid opening.

(b) For acquisitions conducted using negotiation procedures—

(1) On the date specified for receipt of offers, if award is based on initial offers; otherwise

(2) On the date specified for receipt of quote revisions.

4.6 TECHNICAL EVALUATION

4.6.1 Licensing and Legal Authorization Requirement.

Offerors must provide documentation demonstrating their legal authorization to perform the services described in this solicitation. To comply, offerors may provide the following:

a) For Offerors Operating in Mexico:

- Valid REPSE registration for the specialized services being offered, specifically including Voltage Electrical Equipment maintenance.

b) For Offerors Operating in the United States:

- Valid General Contractor License, if required by the relevant state or local jurisdiction.

c) Any trade-specific licenses applicable to the scope of work, including but not limited to:

- Electrical Contractor License
- Any other required professional licenses

d) Offerors must submit copies of all relevant licenses as part of their quote

4.6.2 Proof of experience

a) Offerors shall provide documentation demonstrating relevant past experience in performing Preventinve Maintenance for Low Voltage Electrical Equipment, controls and auxiliary equipment for facilities of similar size and complexity.

b) The Government will place greater weight on contracts that include:

- Direct hands-on maintenance of CAT standby or prime power generators.
- Maintenance and testing of automatic transfer switches (ATS) integrated with CAT generator systems.
- Performance of load bank testing, operational testing, and emergency troubleshooting of CAT generators.
- Experience supporting facilities where CAT generators served mission-critical, life-safety, or continuous operations functions.

c) Experience limited to non-CAT manufacturers will be considered less relevant. Experience that does not include generator systems or does not demonstrate direct maintenance responsibility will be considered not relevant to this factor.

d) Offerors must submit details for at least five (5) contracts completed within the past five (5) years. At least three (3) of these contracts shall include Medium Voltage Electrical Equipment Maintenance Services comparable in scope to this solicitation

e) For each contract, the following information shall be provided:

- Client Name:
- Location (City, Country):
- Contract Title or Description:
- Brief Scope of Work: (including property type, size, and key services performed)
- Contract Value:

- Period of Performance: (start and end dates)
- Client Point of Contact: (name, title, email, and telephone number)

f) The Government reserves the right to contact any or all references to verify the information provided and to assess the offeror's performance on previous contracts.

4.6.3 OEM Authorization Requirement – CAT Generators

a) The Offeror shall provide documentation demonstrating that it is an authorized service provider for Caterpillar (CAT) generator equipment.

b) Acceptable documentation shall include a valid Original Equipment Manufacturer (OEM) authorization certificate issued by Caterpillar, or equivalent written documentation from the manufacturer confirming that the Offeror is authorized to perform the level of inspection, preventive maintenance, diagnostics, and repair services required under this contract for CAT generator systems.

The documentation must:

- Be current and valid at the time of quote submission
- Clearly identify the Offeror's company name
- Specify authorization to perform service and maintenance on CAT generator equipment
- Cover the geographic region where contract services will be performed
- Failure to provide acceptable proof of CAT OEM authorization may render the quote technically unacceptable.

4.6.4 Organizational Structure Submission.

a) Offerors shall submit an organizational chart specific to this contract that clearly illustrates the proposed staffing structure, reporting relationships, and position titles necessary to fulfill the requirements of the Statement of Work (SOW).

b) In addition to the organizational chart, Offerors shall provide copies of current and valid professional and technical certifications for key personnel proposed to perform work under this contract. These certifications must demonstrate that personnel are officially qualified and authorized to perform the types of inspection, maintenance, diagnostics, and repair services required by the SOW.

4.6.5 Acceptable certifications may include:

a) Original Equipment Manufacturer (OEM) training or authorization certificates (e.g., CAT-certified technician credentials)

b) Trade licenses where required by law (such as electrician licenses)

c) Industry-recognized technical certifications relevant to generator and power system maintenance
d) All certifications must:
    - Be current and valid at the time of quote submission
    - Clearly identify the individual to whom the certification was issued
    - Demonstrate qualification for the level of work required under the SOW

4.6.6 Safety Plan (Attachment I)

SECTION 5 - REPRESENTATIONS AND CERTIFICATIONS

ADDENDUM TO SOLICITATION PROVISIONS
FAR AND DOSAR PROVISIONS NOT PRESCRIBED IN PART 12

FAR Clauses Incorporated by Reference

52.252-1 SOLICITATION PROVISIONS INCORPORATED BY REFERENCE (FEB 1998)

This solicitation incorporates one or more solicitation provisions by reference, with the same force and effect as if they were given in full text. Upon request, the Contracting Officer will make their full text available. Also, the full text of a clause may be accessed electronically at: *http://www.acquisition.gov/far/* or *http://farsite.hill.af.mil/vffara.htm*

These addresses are subject to change. If the FAR is not available at the locations indicated above, use of an internet "search engine" (for example, Google, Yahoo, Excite) is suggested to obtain the latest location of the most current FAR provisions.

52.240-90 Security Prohibitions and Exclusions Representations and Certifications.

Security Prohibitions and Exclusions Representations and Certifications (Deviation Date)

(a) *Definitions.* As used in this provision-—
Backhaul, covered article, covered telecommunications equipment or services, critical technology, FASCSA order, Intelligence community, interconnection arrangements, national security system, roaming, sensitive compartmented information, sensitive compartmented information system, source, and substantial or essential component have the meanings provided in the clause 52.240-91, Security Prohibitions and Exclusions.
Business operations means engaging in commerce in any form, including by acquiring, developing, maintaining, owning, selling, possessing, leasing, or operating equipment, facilities, personnel, products, services, personal property, real property, or any other apparatus of business or commerce.
Marginalized populations of Sudan means—
(1) Adversely affected groups in regions authorized to receive assistance under section 8(c) of the Darfur Peace and Accountability Act (Pub. L. 109-344) (50 U.S.C. 1701 note); and
(2) Marginalized areas in Northern Sudan described in section 4(9) of such Act.

Restricted business operations means business operations in Sudan that include power production activities, mineral extraction activities, oil-related activities, or the production of military equipment, as those terms are defined in the Sudan Accountability and Divestment Act of 2007 (Pub. L. 110-174). Restricted business operations do not include business operations that the person (as that term is defined in Section 2 of the Sudan Accountability and Divestment Act of 2007) conducting the business can demonstrate—

(1) Are conducted under contract directly and exclusively with the regional government of southern Sudan;
(2) Are conducted under specific authorization from the Office of Foreign Assets Control in the Department of the Treasury, or are expressly exempted under Federal law from the requirement to be conducted under such authorization;
(3) Consist of providing goods or services to marginalized populations of Sudan;
(4) Consist of providing goods or services to an internationally recognized peacekeeping force or humanitarian organization;
(5) Consist of providing goods or services that are used only to promote health or education; or
(6) Have been voluntarily suspended.

Sensitive technology—
(1) Means hardware, software, telecommunications equipment, or any other technology that is to be used specifically—
(i) To restrict the free flow of unbiased information in Iran; or
(ii) To disrupt, monitor, or otherwise restrict speech of the people of Iran; and
(2) Does not include information or informational materials the export of which the President does not have the authority to regulate or prohibit pursuant to section 203(b)(3) of the International Emergency Economic Powers Act (50 U.S.C. 1702(b)(3)).

(b) *Procedures*.
(1) *Covered telecommunications and video surveillance*. The Offeror shall review the list of excluded parties in the System for Award Management (SAM) at https://www.sam.gov for entities excluded from receiving federal awards for "covered telecommunications equipment or services."
(2) *FASCSA Orders*.
(i) The Offeror shall search in SAM for the phrase "FASCSA order" for any covered article, or any products or services produced or provided by a source, if there is an applicable FASCSA order described in paragraph (e) of FAR 52.240-91, Security Prohibitions and Exclusions.
(ii) The Offeror shall review the solicitation for any FASCSA orders that are not in SAM but are effective and apply to the solicitation and resultant contract (see FAR 40.204-1(c)(2)).
(iii) FASCSA orders issued after the date of solicitation do not apply unless added by an amendment to the solicitation.
(c) *Covered telecommunications equipment or services representations*. By submission of its offer, the Offeror represents that, after conducting a reasonable inquiry (that looks at any information in the Offeror's possession but does not need to include an internal or third-party audit)—
(1) It will not provide covered telecommunications equipment or services to the Government in the performance of any contract, subcontract or other contractual instrument resulting from this solicitation, except as waived by the solicitation, or as disclosed in paragraph (g); and
(2) It does not use covered telecommunications equipment or services, or use any equipment, system, or service that uses covered telecommunications equipment or services, except as waived by the solicitation, or as disclosed in paragraph (g).
(d) *FASCSA Representation*. By submission of this offer, the offeror represents that it has conducted a reasonable inquiry, and that the offeror does not propose to provide or use in response to this solicitation any covered article, or any products or services produced or provided by a source, if the covered article or the source is prohibited by an applicable FASCSA order in effect

on the date the solicitation was issued, except as waived by the solicitation, or as disclosed in paragraph (g). A reasonable inquiry will look at any information in the offeror's possession but does not need to include an internal or third-party audit.

(e) *Sudan certification*. By submission of its offer, the offeror certifies, after conducting a reasonable inquiry (that looks at any information in the offeror's possession but does not need to include an internal or third-party audit), that the offeror does not conduct any restricted business operations in Sudan.

(f) *Iran Representation and Certifications*.

(1) Except as provided in paragraph (f)(2) of this provision or if a waiver has been granted in accordance with FAR 40.203-3, the offeror, after conducting a reasonable inquiry (that looks at any information in the offeror's possession but does not need to include an internal or third-party audit), by submission of its offer—

(i) Represents, to the best of its knowledge and belief, that the offeror does not export any sensitive technology to the government of Iran or any entities or individuals owned or controlled by, or acting on behalf or at the direction of, the government of Iran;

(ii) Certifies that the offeror, or any person (as defined at section 15 of the Iran Sanctions Act of 1996, Pub. L. 104-172, 50 U.S.C. 1701 note) owned or controlled by the offeror, does not engage in any activities for which sanctions may be imposed under section 5 of the Act. These sanctioned activities are in the areas of development of the petroleum resources of Iran, production of refined petroleum products in Iran, sale and provision of refined petroleum products to Iran, and contributing to Iran's ability to acquire or develop certain weapons or technologies; and

(iii) Certifies that the offeror, and any person owned or controlled by the offeror, does not knowingly engage in any transaction that exceeds $15,000 with Iran's Revolutionary Guard Corps or any of its officials, agents, or affiliates, the property and interests in property of which are blocked pursuant to the International Emergency Economic Powers Act (50 U.S.C. 1701 et seq.) (see OFAC's Specially Designated Nationals and Blocked Persons List at https://www.treasury.gov/resource-center/sanctions/SDN-List/Pages/default.aspx)

(2) Exception for trade agreements. The representation and certification requirements of paragraph (f)(1) of this provision do not apply if—

(i) This solicitation includes a trade agreements notice or certification (e.g., 52.225-6, Trade Agreements Certificate); and

(ii) The offeror has certified that all the offered products to be supplied are designated country end products or designated country construction material.

(iii) The offeror shall email questions concerning sensitive technology to the Department of State at CISADA106@state.gov.

(g) *Disclosure*.

(1) If the Offeror is not able to represent compliance with the prohibitions in paragraphs (c) or (d), then the Offeror shall disclose within 72 hours to the contracting office identified in paragraph (g)(2) the following information for each product or service not compliant:

(i) Contract number and order number, if applicable;

(ii) Identification of whether this disclosure relates to paragraph (c) on covered telecommunication equipment or services, or to paragraph (d) on FASCSA orders;

(iii) A description of the products or services that the Contractor identifies or has reason to suspect is prohibited (include brand; model number, such as the original equipment manufacturer (OEM) number, manufacturer part number, or wholesaler number; and item description, as applicable);

(iv) The entity that produced the product or service (include entity name, unique entity identifier, Contractor and Government Entity (CAGE) code, facilities responsible for design, fabrication, assembly, packaging, and test of the product, and whether the entity was the OEM or a distributor (provide manufacturer codes and distributor codes used for the product));
(v) Description of the functionality of the product or service and how that functionality impacts the risk to the product or service;
(vi) An explanation of any factors relevant to determining if the product or service should be permitted by an applicable exception, exemption, or waiver (if the offeror would like the Government to consider a waiver);
(vii) Whether alternative products or services are available that would be compliant with the prohibition;
(viii) If the product or service is related to item maintenance, include the following information on the item being maintained:
(A) Brand;
(B) Model number, OEM number, manufacturer part number, or wholesaler number; and
(C) Item description, as applicable.
(ix) Any readily available information about mitigation actions undertaken or recommended.
(2) If a disclosure is required to be submitted to a contracting office, the offeror shall submit the disclosure as follows:
(i) If a Department of Defense contracting office, the offeror shall submit the disclosure to the website at https://dibnet.dod.mil.
(ii) For all other contracting offices, the Offeror shall submit the disclosure to the Contracting Officer.
(3) If the disclosure provided does not contain any of the information required by paragraph (1), and the Offeror later discovers new information that is required by paragraph (1), then the Offeror shall submit a subsequent disclosure within 72 hours of discovering the new information.
(h) *Executive agency review of disclosures*. The Contracting Officer will review disclosures provided in paragraph (g) to determine if any applicable waiver may be sought. The Contracting Officer may choose not to pursue a waiver and may instead make an award to an Offeror that does not require a waiver.

(End of provision)