5631-1000-000

1. MECHANICAL GENERAL NOTES.

1. INFORMATION, TOLERANCES, AND NOTES ON THIS SHEET APPLY TO ALL MECH. DRAWINGS, UNLESS NOTED OTHERWISE.
2. ~~UNLESS OTHERWISE NOTED, MECHANICAL FASTENERS MUST BE TYPE 304 STAINLESS STEEL IN ACCORDANCE WITH ASTM F879. FASTENER THREADS MUST BE COATED WITH A TOOL REMOVABLE THREAD LOCKING COMPOUND SUITABLE FOR BOTH MATERIALS BEFORE FINAL ASSEMBLY. FASTENERS MUST BE INSTALLED WITH HAND TOOLS TO AVOID POTENTIAL GALLING.~~
3. ~~NOMINAL THREAD CLASS FOR INTERNAL AND EXTERNAL THREADS IS UNC 2A/2B. WHEN THREADS ARE CUT FOR USE WITH HOT-DIP GALVANIZED FASTENERS, ADJUST TOLERANCES PER ASTM A593.~~
4. ~~PERFORM WELDING IN ACCORDANCE WITH AWS D1.6.~~
5. 125 MICROINCH SURFACE TEXTURE ON ALL MACHINED SURFACES, UNLESS SHOWN OTHERWISE. SURFACE TEXTUREPER ASME B46.1.
6. VARIOUS DIMENSIONS SHOWN ARE BASED ON SPECIFIED EQUIPMENT. ADJUSTMENTS MAY BE REQUIRED DEPENDING ON EQUIPMENT SUPPLIED.
7. ALL LINEAR UNITS ARE FEET AND INCHES OR INCHES AND ALL ANGULAR UNITS ARE DEGREES, UNLESS SHOWN OTHERWISE.
8. BREAK CORNERS AND EDGES, UNLESS SHOWN OTHERWISE.
9. ALL CHAMFERS ARE 45 DEGREES, UNLESS OTHERWISE NOTED.
10. AT FABRICATION, ALL PARTS MUST BE ASSIGNED A CONTRACTOR-DESIGNATED PART NUMBER MARK BY EMBOSSING OR ETCHING. ~~WELDMENTS WILL BE TREATED AS ONE PART.~~ ALL FABRICATED PARTS MUST BE SHOP ASSEMBLED AND CHECKED FOR PROPER FIT AND TOLERANCES. ALL PARTS MUST BE MATCH MARKED FOR REFERENCE DURING ASSEMBLY.
11. ~~CONTRACTOR TO DELIVER SHIELD FRAME WELDMENT AS ONE PIECE. WOOD BLOCKS MUST BE UTILIZED TO LIMIT DAMAGE DURING TRANSPORTATION. COVER PLATES, ACCESS DOORS, SIDE BRACKETS AND ALL HARDWARE MUST ALL BE PACKAGEDTOGETHER AND DELIVERED AT THE SAME TIME AS THE SHIELD FRAME WELDMENT. SEE M-501 FOR QUANTITIES AND TYPES OF PARTS TO BE SUPPLIED BY CONTRACTOR.~~
12. SEE SPECIFICATIONS FOR ADDITIONAL EQUIPMENT REQUIREMENTS. DRAWING PART NUMBERS MAY NOT REFLECT EVERY SALIENT FEATURE.

1.0 STRUCTURAL STEEL

1.1 ALL DIMENSIONS, DISTANCES AND SHOWN ARE PER THE ORIGINAL CONTRACT DRAWINGS. THE CONTRACTER MUST FIELD VERIFY ALL DIMENSIONS PRIOR TO BEGINNING FABRICATION AND MUST DOCUMENT ALL VARIANCES IN SHOP DRAWINGS SHOWING CLOUDED VARIANCES FOR GOVERNMENT APPROVAL.

1.2 ALL SHARP EDGES MUST BE BROKEN TO A 1/16" RADIUS UNLESS NOTED OTHERWISE. SHARP EDGE IS DEFINED AS ANY EDGE THAT IS THE RESULT OF SHEARING, FLAME CUTTING, OR MACHINING. SHEARED PLATES GREATER THAN 5/8" ARE NOT ALLOWED.

1.3 ALL STRUCTURAL STAINLESS STEEL MUST BE ASSUMED TO BE TENSION MEMBERS.

1.4 ALL WELDS ON THE CONTRACT DRAWINGS MUST BE ASSUMED TO BE CJP WELDS UNLESS THERWISE NOTED OR APPROVED BY THE GOVERMNENT, AND MUST BE IDENTIFIED ON THE SHOP DRAWINGS FOR APPROVAL.

1.5 ALL MISSING WELDS ADDED BY THE CONTRACTOR TO THE SHOP DRAWINGS MUST BE PROVIDED IN LIST FORM IDENTIFYING WHICH SHOP DRAWING SHEET THE WELD IS LOCATED ON. THIS LIST MUST BE ADDED TO THE FIRST PAGE OF THE SHOP DRAWINGS AND MUST BE PROVIDED FOR GOVERNMENT APPROVAL.

1.6 WELD ACCESS HOLES ARE 1 1/2" RADIUS AND GROUND SMOOTH UNLESS OTHERWISE NOTED.

1.7 ALL MATERIALS TO BE WELDED MUST BE ASTM 240/A240M, STAINLESS STEEL, UNS S30400 UNLESS OTHERWISE NOTED.

1.8 PROVIDE BOLTS, NUTS, PINS, AND WASHERS OF THE MATERIAL, GRADE, TYPE, CLASS, STYLE AND FINISH INDICATED.

1.8.1
HEX BOLTS - ASTM F593 STAINLESS STEEL ALLOY 304.
1.8.2
BUTTON HEAD CAP SCREWS - ASTM F879 STAINLESS STEEL ALLOY 304.
1.8.3
FLAT COUNTERSUNK HEAD CAP SCREWS - ASTM F879 STAINLESS STEEL ALLOY 304.
1.8.4
HEX NUTS - ASTM F594 STAINLESS STEEL ALLOY 304.
1.8.5
WASHERS - ASTM A276/A276M STAINLESS STEEL TYPE 304.

1.9 WELDING TO BE PER AWS D1.6 AND SPECIFICATION 05 59 20.00 25.

1.10 ULTRAHIGH MOLECULAR WEIGHT POLYETHYLENE (UHMW-PE)
(1) MINIMUM SPECIFIC GRAVITY OF 0.034 LBS/IN3 PER ASTM D792.
(2) MINIMUM TENSILE STRENGTH OF 4,000 PSI PER ASTM D638.
(3) MINIMUM DUROMETER HARDNESS OF D65 PER ASTM D2240 - PER RFI-0005.
(4) MAXIMUM COEFFICIENT OF FRICTION AGAINST STEEL OF 0.20 PER ASTM D1894.
(5) MINIMUM NOTCHED IZOD IMPACT STRENGTH AT 23 DEGREES C OF 22.5 FT-LBS/IN PER ASTM D256.
(6) NO (ZERO PERCENT) WATER ABSORPTION PER ASTM D570.
a. THE UHMW-PE MATERIAL MUST BE STABILIZED FOR ULTRAVIOLET RADIATION VIA 2.5 PERCENT CARBON BLACK OR OTHER EQUIVALENT STABILIZER. THE FABRICATED FORM MUST BE FORMULATED FROM 100 PERCENT VIRGIN RESIN. THE VIRGIN RESIN MUST BE A CROSS-LINKED HOMOPOLYMER OF ETHYLENE AND HAVE AN INTRINSIC VISCOSITY (IV) BETWEEN 22.0 AND 28.0 DL/G PER ASTM D4020.

2.0 DESIGN LOADS

2.1 HYDROSTATIC FORCE: 0.748 KIPS/FT

2.2 DEBRIS LOAD: 39 KIPS

NDT REQUIRMENTS

USACE - PORTLAND OR
BONNEVILLE DAM PIT TAG DETECTION
W9127N25PA043

CODE	WELD TYPE	VT	MT	UT	RT	PT	MISC.
D1.6 (FC)							
	FILLET	100%				100%	
	PJP	100%				100%	
	CJP	100%		100%		100%	TENSION CRITERIA, SEE NOTE 2

NOTES:
1. REJECTS FOUND DURING RANDOM TESTING WILL REQUIRE 100% OF THE APPLICABLE WELD TO BE TESTED
2. IN THE UT REPORT, INCLUDE REJECTABLE INDICATION AND NOT-REJECTABLE INDICATION WITH A DEFECT SEVERETY RATING WITHIN 6db OF BEING REJECTABLE. FULLY RECORD THE INDICATION, RATING, SIZE AND LOCATION OF EACH WELD TESTED

BULKHEAD DRAWING LIST

DRAWING DISCRIPTION	DRAWING
GENERAL NOTES AND DRAWING LIST	5631-1000-000
OVERALL ASSEMBLY	5631-1000-001
PIT TAG WELDMENT	5631-1000-005
GENERAL LAYOUT	5631-1000-006
MAIN PLATE DETAILS	5631-1000-007
END PLATE PART DETAILS	5631-1000-008
PARTIAL AND FULL STIFFENER PART DETAILS	5631-1000-009
NORTH END SIDE BRACKET	5631-1000-010
NORTH END SIDE BRACKET PART DETAILS	5631-1000-011
SOUTH END SIDE BRACKET	5631-1000-012
SOUTH END SIDE BRACKET PART DETAILS	5631-1000-013
COVER PLATE & ACCESS DOOR PART DETAIL	5631-1000-014
POST FABRICATION HOLE LAYOUT	5631-1000-015
TRANCEIVER SKID CAP	5631-1000-020
ANTENNA SKID CAP ASSEMBLY	5631-1000-021
ANTENNA SKID CAP PART DETAILS	5631-1000-022
ANTENNA SKID CAP PART DETAILS	5631-1000-023
UHMW WIER GATE SPACER	5631-1000-024

Content crossed out is not applicable to this contract.

TOLERANCES UNLESS NOTED OTHERWISE	
DECIMAL	FRACTIONAL
.00 = +\- 0.02	UNDER 30ft = +\- 1/16"
.000 = +\- 0.005	30ft AND OVER = +\- 1/8"

MRK	DATE	REVISIONS	MADE BY
0	10-30 2025	ISSUED FOR FABRICATION	JN
B	10-28 2025	CHANGED UHMW DUROMETER TO 65 PER REF-0005. RE-ISSUED FOR APPROVAL	JN
A	10-08 2025	ISSUED FOR APPROVAL	JN

USACE
BONNEVILLE DAM FISH PASSAGE FACILITY
PIT TAG DETECTION
GENERAL NOTES AND DRAWING LIST
W9127N25PA043

transco INDUSTRIES, INC.
5534 NW 112ND AVE.
PORTLAND, OREGON 97230
1(503)256-1955
WWW.TRANSCO-IND.COM

SCALE SCALE	DRW. BY JMN	CHK. BY BP	DWG.NO.
ORIG.DR.	DATE 09/24/25	DATE 09/29/25	5631-1000-000

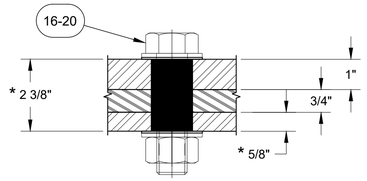

TYPICAL WEIR GATE CONNECTION

SCALE X4
TYPICAL 40 LOCATIONS
* REQUIRES FIELD VERIFICATION OF EXISTING WEIR GATE STEEL.

		BILL OF MATERIALS				5631-1000-001	
ITEM	QTY	DESCRIPTION	LENGTH	MATERIAL	CVN	WEIGHT	TRACE#
	1	MK~5631-1000-001A					
1	1	MK~5631-1000-005A (SHIELD FRAME WELDMENT)				4904.0	
2	4	MK~5631-1000-014B (ACCESS DOOR)				19.5	
3	12	1/4" - 20 UNC - BUTTON HEAD CAP SCREW	1 3/8" LONG	ASTM F879 TYPE 304		-	
4	5	MK~5631-1000-014A (COVER PLATE)				19.5	
5	20	1/4" - 20 UNC - FLAT SOCKET CAP SCREW	5/8" LONG	ASTM F879 TYPE 304		-	
6	1	MK~5631-1000-010A (NORTH END SIDE BRACKET)				20.1	
7	1	MK~5631-1000-012A (SOUTH END SIDE BRACKET)				20.1	
8	8	HHCS 3/8" - 16 UNC	7/8" LONG	ASTM F593 TYPE 304		-	
9	5	MK~5631-1000-020A (TRANCEIVER SKID CAP)				17.0	
10	4	MK~5631-1000-021A (ANTENNA SKID CAP)				605.6	

		BILL OF MATERIALS				5631-1000-001	
ITEM	QTY	DESCRIPTION	LENGTH	MATERIAL	CVN	WEIGHT	TRACE#
11	20	3/8" - 16 UNC - BUTTON HEAD CAP SCREW	2" LONG	ASTM F879 TYPE 304		1.4	
12	20	3/8" - 16 UNC - BUTTON HEAD CAP SCREW	2 1/2" LONG	ASTM F879 TYPE 304		1.7	
13	12	1/4" - 20 UNC - BUTTON HEAD CAP SCREW	1 1/4" LONG	ASTM F879 TYPE 304		-	
14	12	1/4" WASHER		ASTM A276 TYPE 304		-	
15	12	1/4" - 20 UNC - HEX NUT		ASTM F594 TYPE 304		-	
16	40	HHCS 1" - 8 UNC	4" LONG	ASTM F593 TYPE 304		47.7	
17	80	1" WASHER		ASTM A276 TYPE 304		15.1	
18	40	1" - 8 UNC - HEX NUT		ASTM F594 TYPE 304		11	
19	80	1" ISOLATION WASHER		FIBERGLASS		-	
20	40	1" ISOLATION SLEEVE		MYLAR		-	
21	1	MK~5631-1000-024A (UHMW WEIR GATE SPACER)				-	
22	1	MK~5631-1000-024B (UHMW WEIR GATE SPACER)				-	

Contractor must fabricate and deliver item 10. Specific details in following sheets.

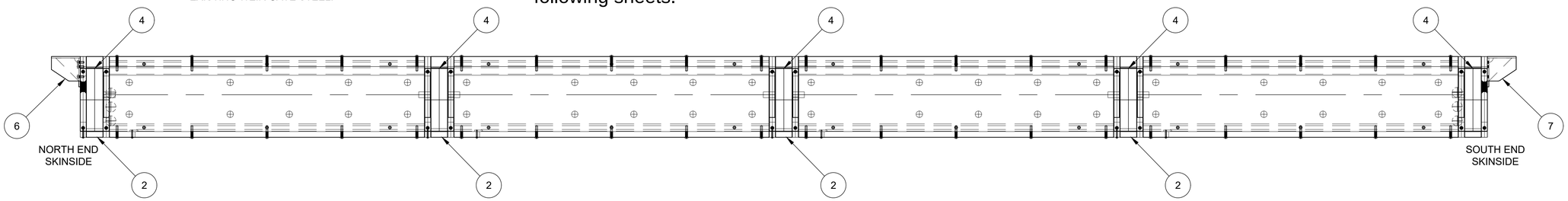

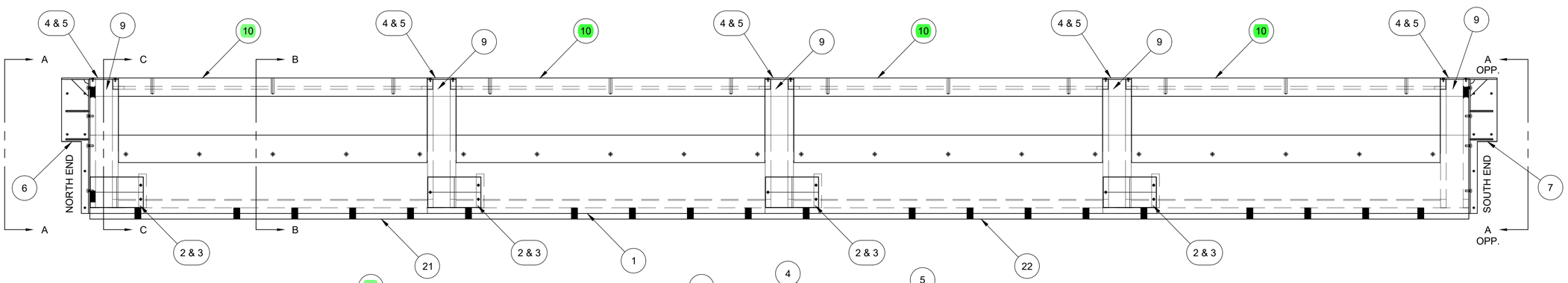

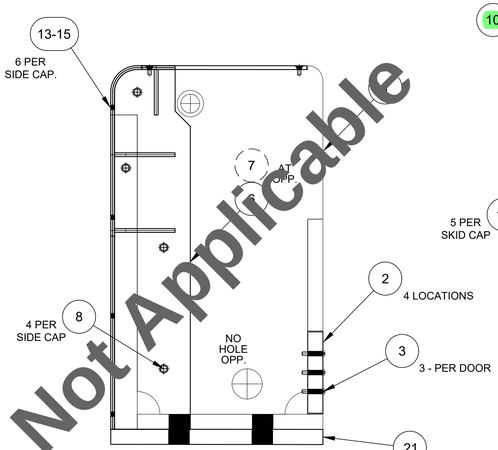

SECTION A-A

SCALE X2
1 LOCATION AS SHOWN
1 LOCATION OPPOSITE

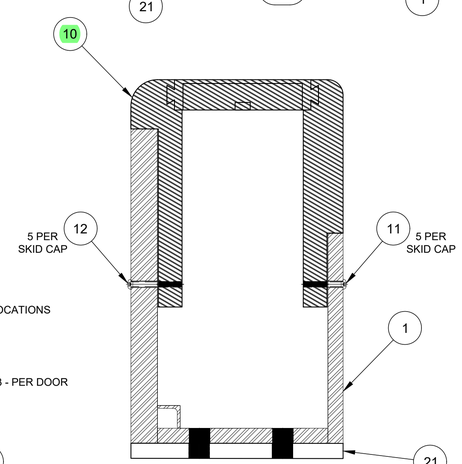

SECTION B-B

SCALE X2
4 LOCATIONS AS SHOWN

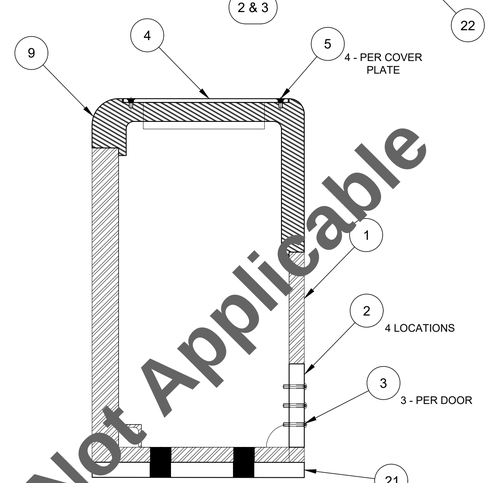

SECTION C-C

SCALE X2
5 LOCATIONS AS SHOWN

Not Applicable

Not Applicable

NOTES:
1. PARTS FOR THIS ASSEMBLY ARE LOCATED ON SHEET 5631-1000-005, 010, 012, 014, 20 & 21.
2. REF. DESIGN DRAWINGS M-201 & M-301 FOR FIELD ASSEMBLY DETAILS.
3. ISOLATION SLEEVE IS ONLY REQUIRED FOR WEIR GATE STEEL ISOLATION FROM STAINLESS STEEL BOLT.
4. HOLES FOR WEIR GATE WILL BE FIELD DRILLED BY GOVERNMENT USING SHIELD AS AS TEMPLATE.
5. ALL PARTS ON THIS DRAWING ARE SHIPPED LOOSE AND WILL BE INSTALLED ON-SITE.

TOLERANCES UNLESS NOTED OTHERWISE	
DECIMAL	FRACTIONAL
.00 = +\- 0.02	UNDER 30ft = +\- 1/16"
.000 = +\- 0.005	30ft AND OVER = +\- 1/8"

MRK	DATE	REVISIONS	MADE BY
0	10-30 2025	ISSUED FOR FABRICATION	JN
B	10-28 2025	FIXED SECTION VIEW B-B. RE-ISSUED FOR APPROVAL	JN
A	10-08 2025	ISSUED FOR APPROVAL	JN

USACE
BONNEVILLE DAM FISH PASSAGE FACILITY
PIT TAG DETECTION WELDMENT
MAIN LAYOUT AND SECTION VIEWS
W9127N25PA043

transco INDUSTRIES, INC.
5534 NW 112ND AVE,
PORTLAND, OREGON 97230
1(503)256-1955
WWW.TRANSCO-IND.COM

SCALE SCALE	DRW. BY JMN	CHK. BY BP	DWG.NO.
ORIG.DR.	DATE 09/25/25	DATE 09/29/25	5631-1000-001

ITEM	QTY	BILL OF MATERIALS DESCRIPTION	LENGTH	MATERIAL	CVN	5631-1000-021 WEIGHT	TRACE#
	4	MK~5631-1000-021A					
1	4	2" X 10"	4'- 8 5/8"	SEE NOTE 1		130.8	
2	4	3 3/8" X 15"	4'- 6 5/8"	SEE NOTE 1		209.6	
3	4	2 5/8" X 15"	4'- 6 5/8"	SEE NOTE 1		248.8	
3	2	RELTEK BONDiT B-45 2 PART EPOXY FOR UHMW. MCMASTER-CARR # 7513A1		EPOXY		-	
				TOTAL WEIGHT		589.2	
				TOTAL WEIGHT EA.		147.3	

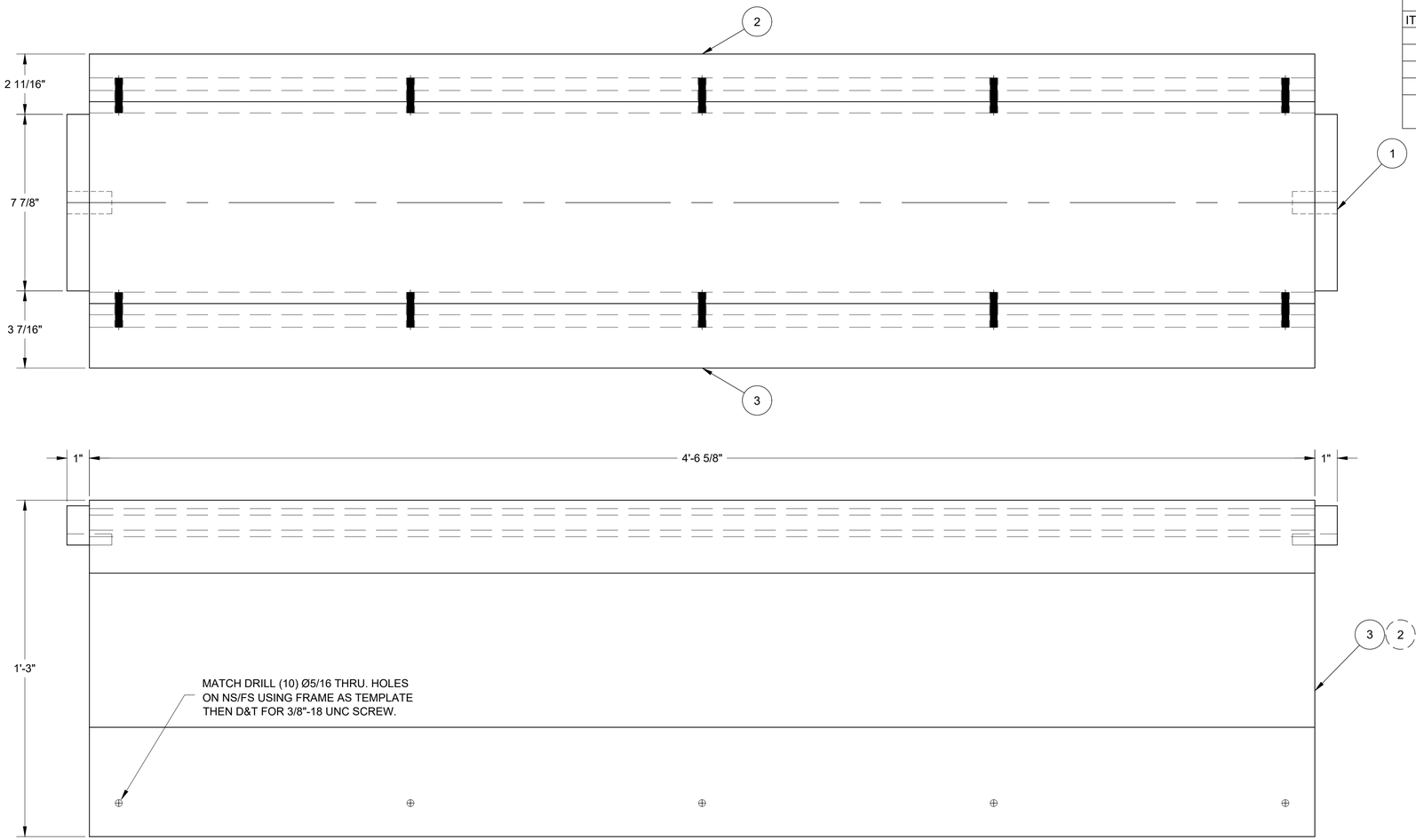

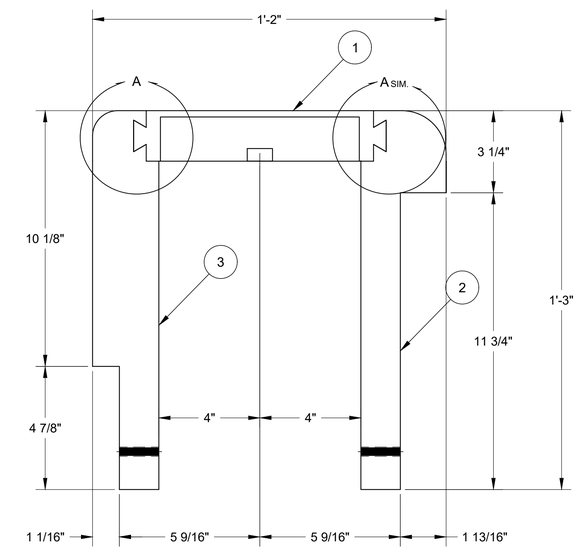

TOLERANCES UNLESS NOTED OTHERWISE	
DECIMAL	FRACTIONAL
.00 = +\- 0.02	UNDER 30ft = +\- 1/16"
.000 = +\- 0.005	30ft AND OVER = +\- 1/8"

RELTEK BONDiT B-45 ADHESIVE ASSEMBLY NOTES:

0 1. ADHESIVE ASSEMBLY FOR UHMW DOVETAIL AND DOVETAIL JOINT
- 0 1.1. SURFACE PREP:
  ABRADE ALL UHMW DOVETAIL AND DOVETAIL JOINT SURFACES WITH 100–120 GRIT SAND PAPER.
  WASH WITH ISOPROPYL ALCOHOL (IPA), ACETONE, OR METHANOL, SO THAT ALL SURFACE CONTAMINATION IS REMOVED.
- 1.2. ADHESIVE:
  MIX BONDiT B-45 PER MANUFACTURER'S INSTRUCTIONS.
- 1.3. APPLICATION:
- 0 1.4. APPLY UNIFORM FILM TO ALL SURFACES OF DOVETAIL AND DOVETAIL JOINT.
- 1.5. CURE:
  AMBIENT TEMPERATURE:
  (70 DEGREES FAHRENHEIT OR 26 C) FOR 24-36 HOURS.

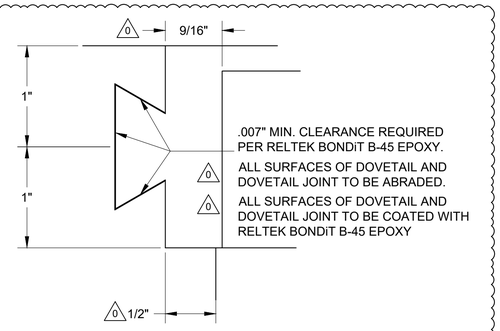

DETAIL A

SCALE X4

NOTES:

1. ULTRAHIGH MOLECULAR WEIGHT POLYETHYLENE (UHMW-PE)
   - 1.1. MINIMUM SPECIFIC GRAVITY OF 0.034 LBS/IN3 PER ASTM D792.
   - 1.2. MINIMUM TENSILE STRENGTH OF 4,000 PSI PER ASTM D638.
   - 1.3. MINIMUM DUROMETER HARDNESS OF D65 PER ASTM D2240. PER. RFI - 0005
   - 1.4. MAXIMUM COEFFICIENT OF FRICTION AGAINST STEEL OF 0.20 PER ASTM D1894.
   - 1.5. MINIMUM NOTCHED IZOD IMPACT STRENGTH AT 23 DEGREES C OF 22.5 FT-LBS/IN PER ASTM D256.
   - 1.6. NO (ZERO PERCENT) WATER ABSORPTION PER ASTM D570.
   - 1.7. THE UHMW-PE MATERIAL MUST BE STABILIZED FOR ULTRAVIOLET RADIATION VIA 2.5 PERCENT CARBON BLACK OR OTHER EQUIVALENT STABILIZER. THE FABRICATED FORM MUST BE FORMULATED FROM 100 PERCENT VIRGIN RESIN. THE VIRGIN RESIN MUST BE A CROSS-LINKED HOMOPOLYMER OF ETHYLENE AND HAVE AN INTRINSIC VISCOSITY (IV) BETWEEN 22.0 AND 28.0 DL/G PER ASTM D4020.
2. PARTS FOR THIS ITEM ARE LOCATED ON 5361-1000-022 & 023.
3. REF. DESIGN DRAWINGS M-503 FOR DETAILS.
4. ITEMS DETAILED ON THIS SHEET ARE LOCATED ON 5631-1000-001.
5. MATCH-MARK EACH PART TO ITS CORRESPONDING DRILLED LOCATION. DO NOT USE A PREVIOUS LOCATION AS A DRILL TEMPLATE FOR SUBSEQUENT HOLES IN AN ANOTHER PART.

MRK	DATE	REVISIONS	MADE BY
0	10-30 2025	CLERIFY DOVETAIL ASSEMBLY INFORMATION. ISSUED FOR FABRICATION	JN
B	10-28 2025	CHANGED UHMW DUROMETER TO 65 PER REF-0005. AND MOVED DOVE TAIL OUT 1/2" FROM SHEAR PLANE. RE-ISSUED FOR APPROVAL	JN
A	10-08 2025	ISSUED FOR APPROVAL	JN

USACE
BONNEVILLE DAM PIT TAG DETECTION
ANTENNA SKID CAP
ASSEMBLY DETAIL
W9127N25PA043

transco INDUSTRIES, INC.
5534 NW 112ND AVE.
PORTLAND, OREGON 97230
1(503)256-1955
WWW.TRANSCO-IND.COM

SCALE SCALE	DRW. BY JMN	CHK. BY BP	DWG.NO.
ORIG.DR.	DATE 09/24/25	DATE 09/29/25	5631-1000-021

5631-1000-022

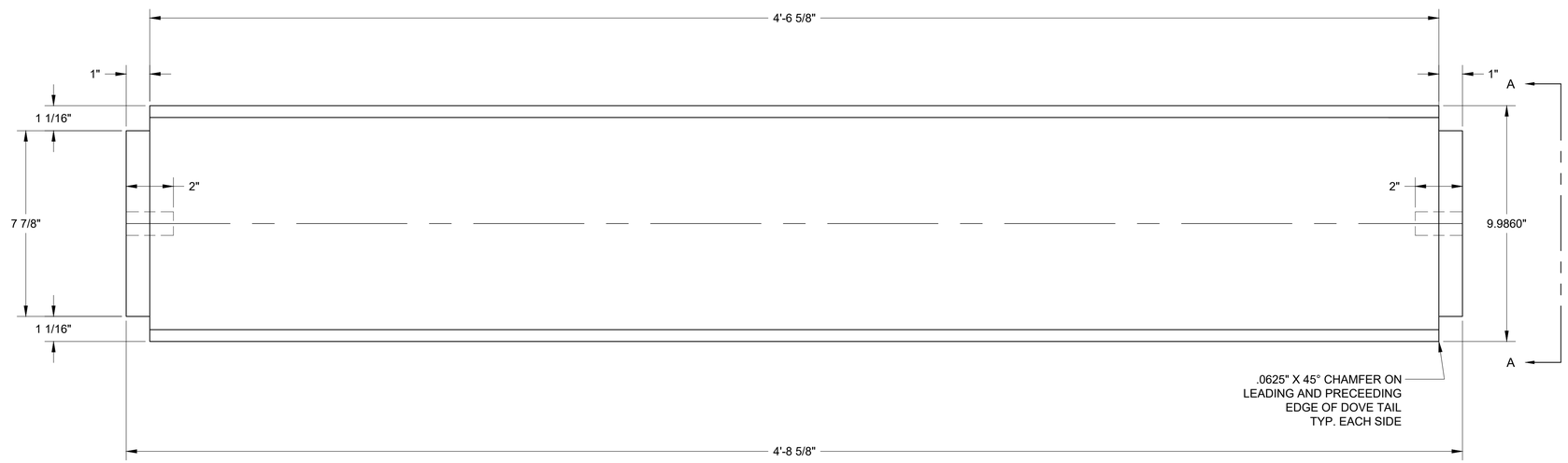

P/N 1 DETAIL

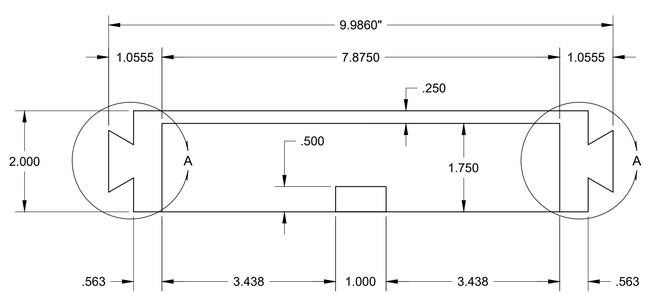

SECTION A-A

SCALE X2

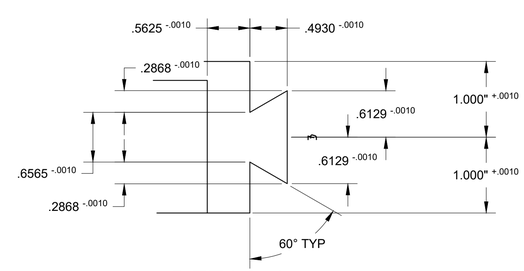

DETAIL A

SCALE X3

NOTES:
1. PARTS DETAILED ON THIS SHEET ARE LOCATED ON 5631-1000-021.
2. REF. DESIGN DRAWINGS M-503 FOR DETAILS.

TOLERANCES UNLESS NOTED OTHERWISE	
DECIMAL	FRACTIONAL
.00 = +\- 0.02	UNDER 30ft = +\- 1/16"
.000 = +\- 0.005	30ft AND OVER = +\- 1/8"

MRK	DATE	REVISIONS	MADE BY
0	10-30 2025	ISSUED FOR FABRICATION	JN
B	10-28 2025	PUSHED DOVE TAIL 1/2" AWAY FROM SHEAR PLANE. RE-ISSUED FOR APPROVAL	JN
A	10-08 2025	ISSUED FOR APPROVAL	JN

USACE
BONNEVILLE DAM PIT TAG DETECTION
ANTENNA SKID CAP
PART DETAILS
W9127N25PA043

transco INDUSTRIES, INC.
5534 NW 112ND AVE,
PORTLAND, OREGON 97230
1(503)256-1955
WWW.TRANSCO-IND.COM

SCALE SCALE	DRW. BY JMN	CHK. BY BP	DWG.NO.
ORIG.DR.	DATE 09/24/25	DATE 09/29/25	5631-1000-022

5631-1000-023

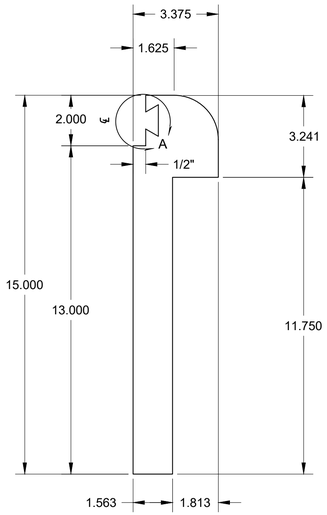

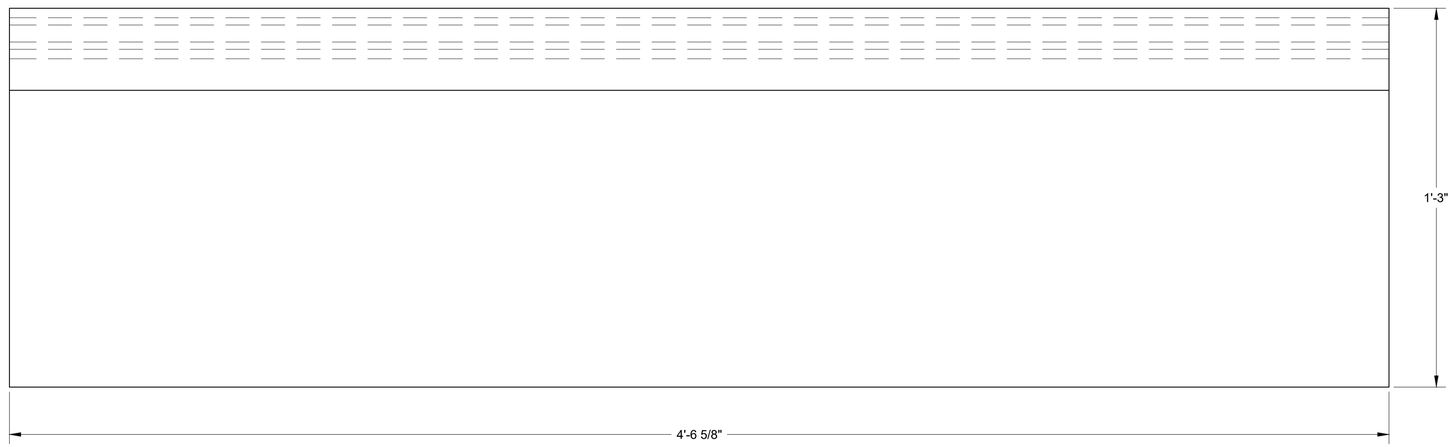

P/N 2 DETAIL

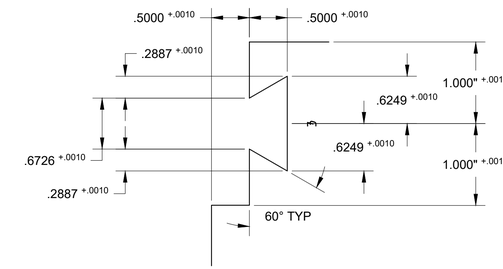

DETAIL A

SCALE X3

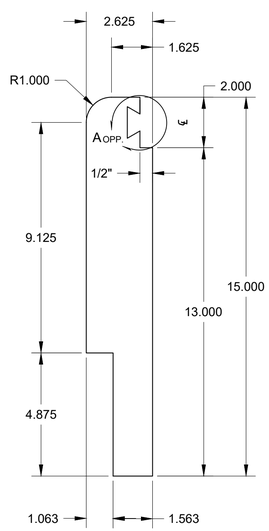

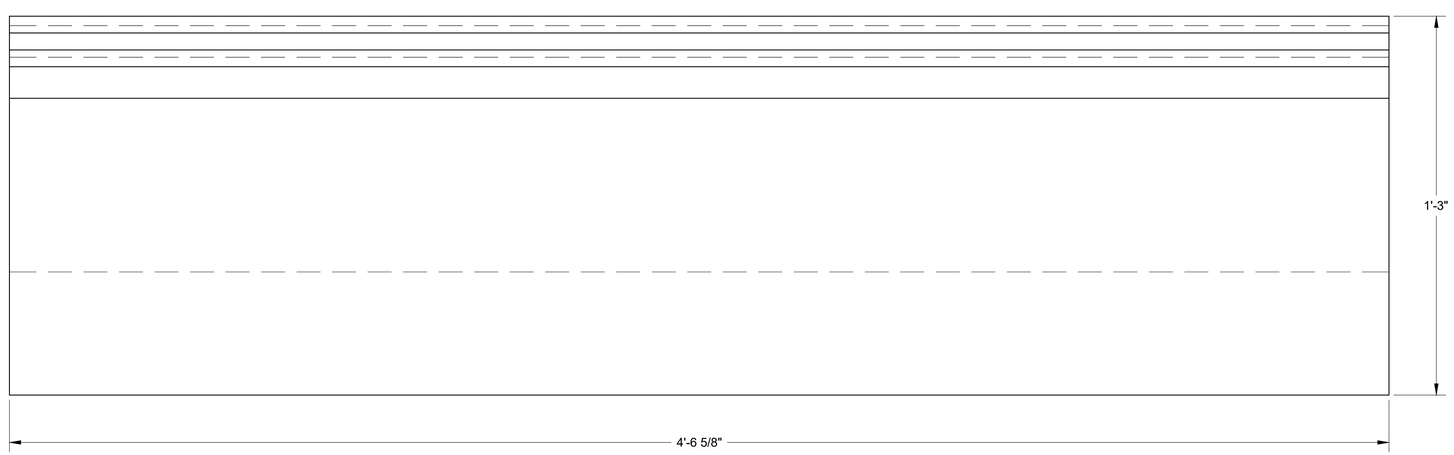

P/N 3 DETAIL

NOTES:
1. PARTS DETAILED ON THIS SHEET ARE LOCATED ON 5631-1000-021.
2. REF. DESIGN DRAWINGS M-503 FOR DETAILS.

TOLERANCES UNLESS NOTED OTHERWISE	
DECIMAL	FRACTIONAL
.00 = +\- 0.02	UNDER 30ft = +\- 1/16"
.000 = +\- 0.005	30ft AND OVER = +\- 1/8"

MRK	DATE	REVISIONS	MADE BY
0	10-30 2025	ISSUED FOR FABRICATION	JN
B	10-28 2025	PUSHED DOVE TAIL 1/2" AWAY FROM SHEAR PLANE. RE-ISSUED FOR APPROVAL	JN
A	10-08 2025	ISSUED FOR APPROVAL	JN

USACE
BONNEVILLE DAM PIT TAG DETECTION
ANTENNA SKID CAP
PART DETAILS
W9127N25PA043

transco INDUSTRIES, INC.
5534 NW 112ND AVE.
PORTLAND, OREGON 97230
1(503)256-1955
WWW.TRANSCO-IND.COM

SCALE SCALE	DRW. BY JMN	CHK. BY BP	DWG.NO.
ORIG.DR.	DATE 09/24/25	DATE 09/29/25	5631-1000-023

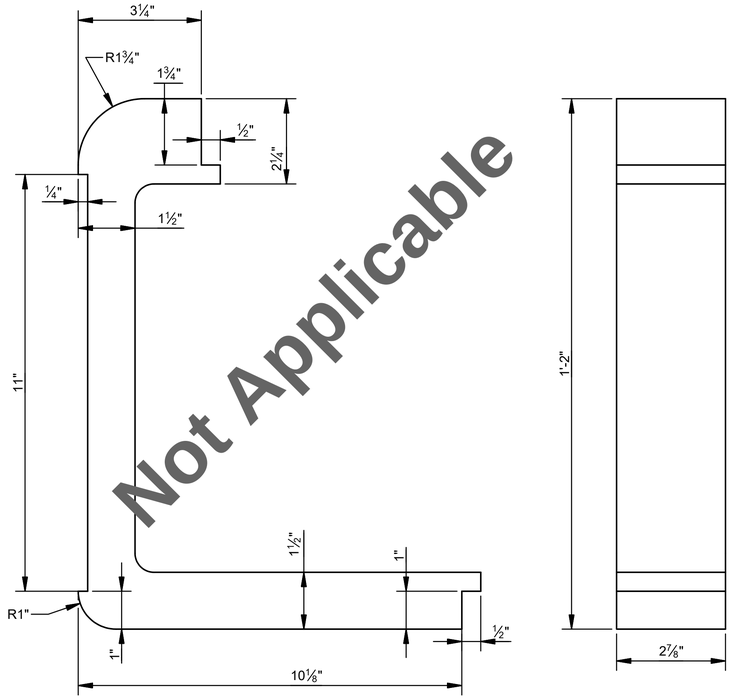

TRANCEIVER SKID CAP

SCALE: 6" = 1'-0"
MATERIAL: UHMW
PER: SPECIFICATION 05 59 20.00 25
NO. REQD: 5

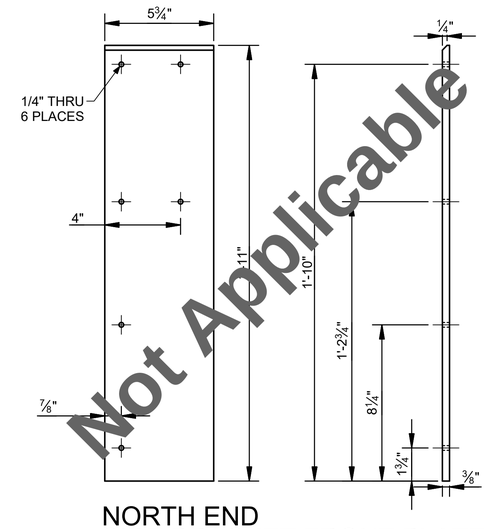

NORTH END SIDE BRACKET FRONT PLATE

SCALE: 3" = 1'-0"
MATERIAL: UHMW
PER: SPECIFICATION 05 59 20.00 25
NO. REQD: 1, 1 MIRROR FOR OPP SIDE, TOTAL: 2

FOR INFORMATION ONLY

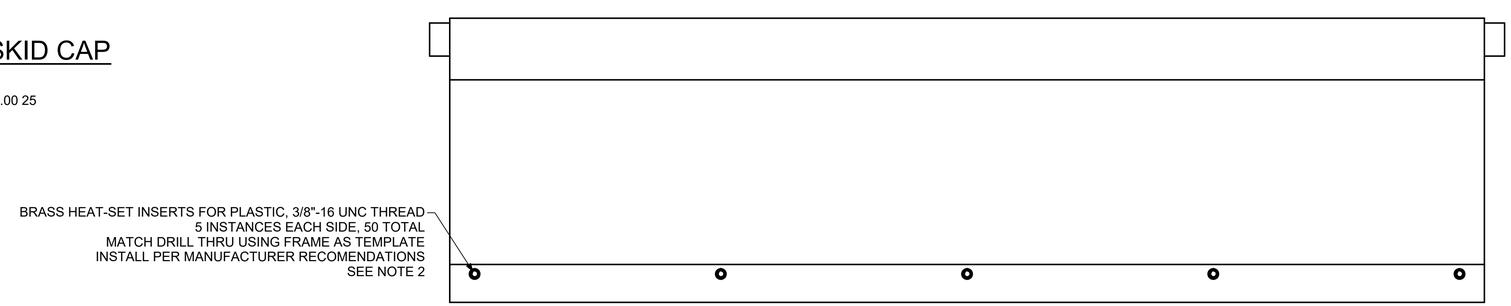

Q SECTION

SCALE: 3" = 1'-0"

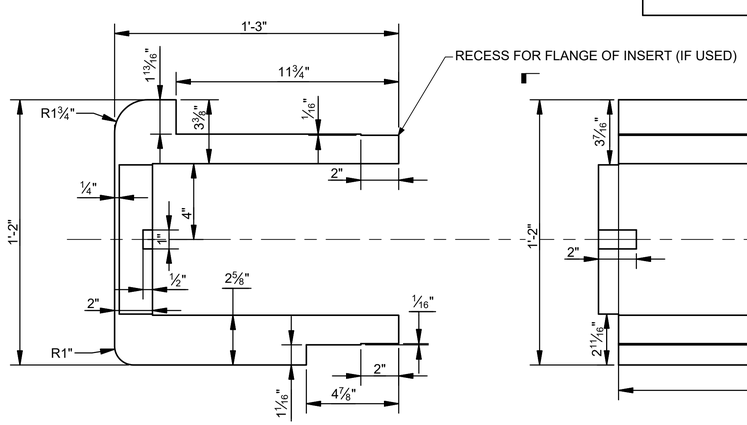

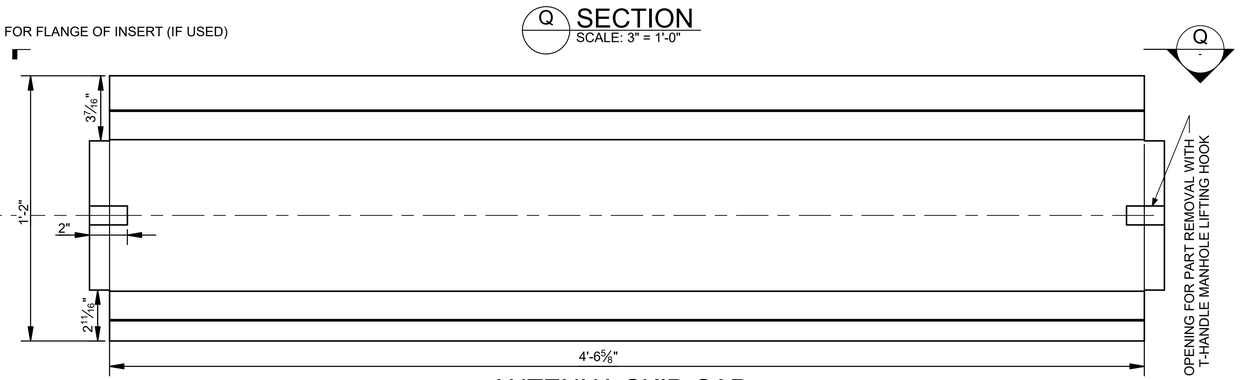

ANTENNA SKID CAP

SCALE: 3" = 1'-0"
MATERIAL: UHMW
PER: SPECIFICATION 05 59 20.00 25
NO. REQD: 4

NOTES

1. SEE M-001 FOR GENERAL NOTES.
2. IF INSERTS NOT USED, DRILL HOLES 5/16" THRU AND TAP FOR 3/8"-16 FASTENER.
3. PARTS ON THIS SHEET INCLUDED FOR REFERENCE ONLY.

SCALE: 3"= 1'-0" 0 3" 6" 12"

SCALE: 6"= 1'-0" 0 1" 2" 3" 6"

US Army Corps of Engineers®
PORTLAND DISTRICT

MARK	DESCRIPTION	DATE	APPR.

U.S. ARMY CORPS OF ENGINEERS
PORTLAND DISTRICT
PORTLAND, OREGON

DESIGNED BY: A. LUNSTRUM
DRAWN BY: E. MITCHELL
SUBMITTED BY: TODD RAUTENKRANZ, P.E.
PLOT SCALE: 1:1
PLOT DATE: 1/30/2025
SIZE: ANSI D
FILE NAME: MECHANICAL DRAWINGS.idw
DATE: 1/30/2025
SOLICITATION NO.
CONTRACT NO.
CHECKED BY: C. MEYER

BONNEVILLE LOCK AND DAM
FISH PASSAGE FACILITY
PIT TAG DETECTION

SIDE BRACKET PLATE & SKID CAPS DETAILS

SHEET IDENTIFICATION
M-503