RFQ HC101925R0007 – DISA-PAC VIDEO WALL – Questions and Answers (Q+A)

Q1: We would like to know if this is a brand new contract or if there is (was) an incumbent performing these services.

A1: This is a new requirement. Refer to the table at the top of page 25 of the solicitation (PWS).

Q2: If not brand new, could you please provide the current / previous contract number?

A2: N/A. Refer to the table at the top of page 25 of the solicitation (PWS).

Q3: To ensure our technical solution and incidental installation costs are as accurate as possible, our technical team has requested a site visit.

A3: There is no scheduled site visit.

Q4: Confirm the existing mounting surfaces and structural support for the new video walls.

A4: Please see attached drawing, "AV Wall Drawing".

Q5: Verify cable pathway feasibility for the new fiber and HDMI runs.

A5: The entire area has a false floor so cables can be run under the raised floor.

Q6: Review the current Extron control system integration points.

A6: The Extron control system is not yet installed. The current control system is an AMX and will be replaced by an Extron system in a separate project. The Extron control system equipment will be installed in the "Storage" room in Section D-1 of the attached drawing on Sheet 35 (A-110).

Q7: Could you please let us know if there is a scheduled site visit for this solicitation or if a walkthrough can be arranged for our team?

A7: There is no scheduled site visit.

Q8: If a visit is possible, please let us know the required lead time for security vetting so we can provide the necessary personnel details for access to Building 77.

A8: There is no scheduled site visit.

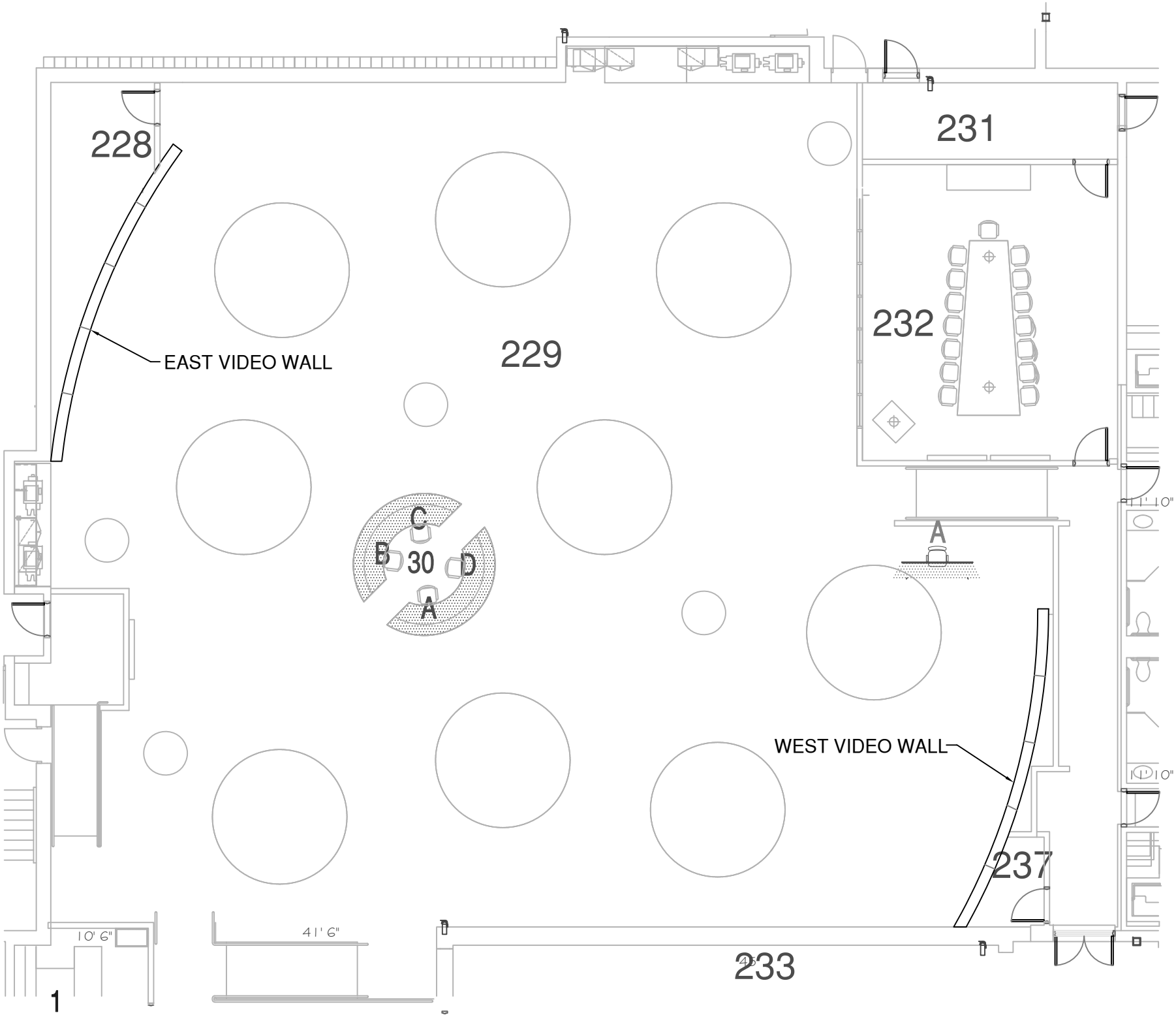
228
231
232
229
EAST VIDEO WALL
C
B
30
D
A
A
WEST VIDEO WALL
237
233
10' 6"
41' 6"
1

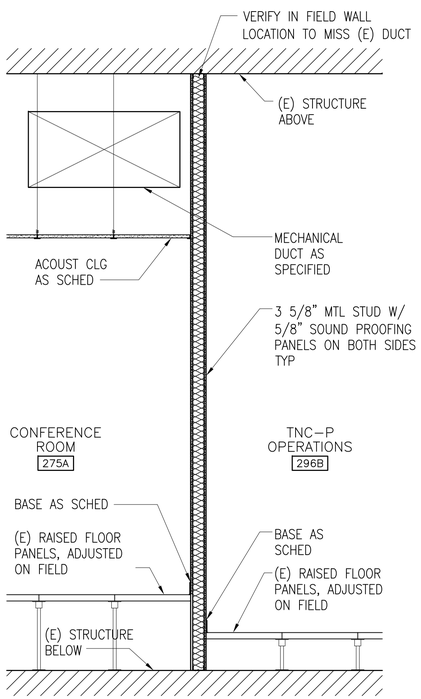

WALL SECTION 1A
SCALE SCALE: 1/2" = 1'-0"

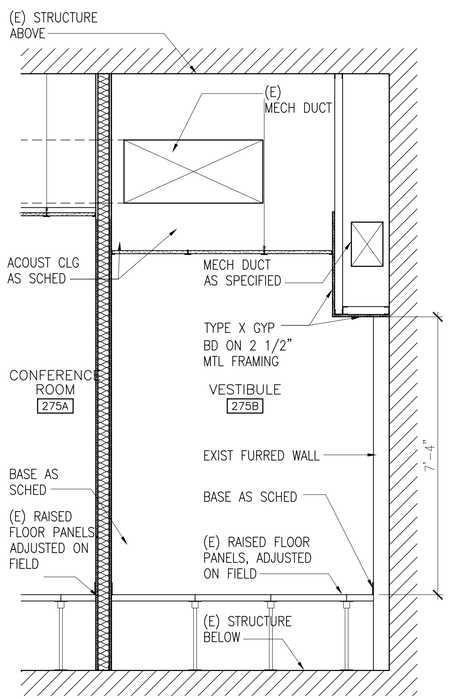

WALL SECTION 2A
SCALE SCALE: 1/2" = 1'-0"

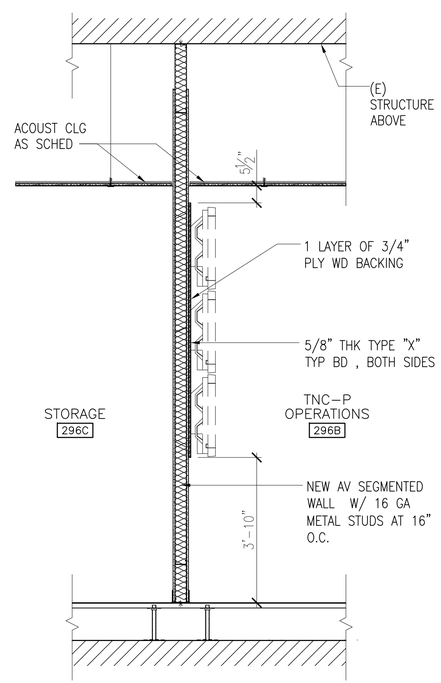

AV SEGMENTED WALL SECTION 3A
SCALE SCALE: 1/2" = 1'-0"

SYM	DESCRIPTION	DATE	APPR

BULLTRACK Construction Company Inc. WATTS CONSTRUCTORS
Bulltrack-Watts, A Joint Venture

ERIC R. NELSON
LICENSED PROFESSIONAL ARCHITECT
No. 13186
HAWAII U.S.A.
SEAL

Signature — License Expiration Date: 4/30/2012

THIS WORK WAS PREPARED BY ME OR UNDER MY SUPERVISION AND CONSTRUCTION OF THIS PROJECT WILL BE UNDER MY OBSERVATION. ("OBSERVATION OF CONSTRUCTION" SHALL BE AS DEFINED ON CHAPTER 115, HAWAII ADMINISTRATIVE RULES FOR PROFESSIONAL ENGINEERS, ARCHITECTS, SURVEYORS, AND LANDSCAPE ARCHITECTS, STATE OF HAWAII, SUBCHAPTER 1, SECTION 16-115-2, DEFINITIONS, EFFECTIVE 8/29/94.)

A/E INFO

APPROVED

FOR COMMANDER NAVFAC

ACTIVITY: DISA-PAC

SATISFACTORY TO — DATE: 09/05/11

DES: EN | DRW: JO | CHK: JB

EM

FIRE PROTECTION

BRANCH MANAGER

BL/TL

DEPARTMENT OF THE NAVY
NAVAL FACILITIES ENGINEERING COMMAND
DISA-PAC
NAVAL FACILITIES ENGINEERING COMMAND ~ HAWAII
PEARL HARBOR, HAWAII
BUILDING 77
FORD ISLAND, PEARL HARBOR, HI
DISA-PAC FACILITY UPGRADES
WALL SECTIONS

SCALE: AS NOTED
EPROJECT NO.: 975896
CONSTR. CONTR. NO. N62742-09-D-1181
NAVFAC DRAWING NO. 19023026
SHEET 48 OF 197
A-404

DRAWFORM REVISION: 10 MARCH 2009

FILE NAME: P:\2010\196073 DB DISA PAC Bldg 77_Ford Island\2000_Design\2100_Project Documents\2110_Living Drawings\DISA-A-404.dwg LAYOUT NAME: A-404 PLOTTED: Thursday, September 01, 2011 - 4:12pm USER: lwilliams