H. V.: 4160GRDY/2400 60BIL 1BU

L.V.: 240/120 (3 LVBU ONLY) LHL 30 BIL

TAPS: 2 AT 2.5% ABOVE & BELOW NORMAL

ITEM AND/OR STOCK #	KVA	DIMENSIONS IN INCHES					APPROX. GAL. OIL	APPROX. WEIGHT LBS.
		A	B	C	D	E		
		WIDTH	HEIGHT	TANK DEPTH	DOOR DEPTH	CABLE OPENING		
1	167	36	32	22.2	16	12.375	61	1601

"E" = "D" – 3.625" DIM "F" IS :	IF DIM "A" IS
10"	32"
12"	34" & >

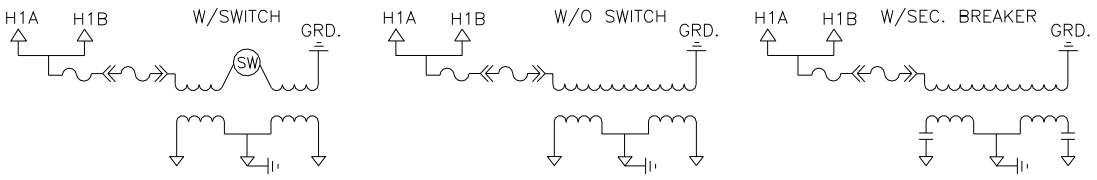

PART	DESCRIPTION	QUANTITY
1	CONDUIT ENTRANCE AREA	1
2	FUSING : GENERIC DUAL/LOAD (DS) BAYO & ISO ECI ISOLATION LINK BY CONFIGURATOR	
3	PARKING STAND	1
4	GENERIC HV BUSH WELL 3-98 OR 3-135 NO LBRK SWITCH	2
5	(1) STAINLESS NAMEPLATE	1
6	P.R.V.: GENERIC.25 10PSI35SCFM (-01 OR -30)	1
7	.50 IN. OIL LEVEL PLUG	1
8	LVBU: COPPER STUD SECONDARY BUSHINGS. 1.00 IN. - 14 STUD SPADES: 4 HOLE NEMA H SPADES 3.50 WIDE	3
9	COMPARTMENT COVER	1
10	LIFTING BOSS (.625"-11 BLIND TAPPED)	4
11	DETACHABLE GROUND STRAP	1
12	0.500 NPT DRAIN VALVE W/SAMP. DEV	1
13	.500"-13 STAINLESS STEEL PENTABOLT	1
14	PADLOCK HASP	1
15	GROUND NUT	3
	W/ GROUND LUGS #10-1 TINNED LUG (DEFLT.STD)	2
16	REMOVABLE SILL	1
17	DOOR RETAINER	1
18	TAP SW: STANDARD DV &/OR TC, CAP WRENCH	1
19	SECONDARY BREAKER HANDLE: NOT REQUIRED	
20	NO CONDUIT ENTRANCE HOLE REQUIRED	
	ADDITIONAL FEATURES	
	PCB DECAL: NONPCB 1X2 (ERMSTD)WHT/BLU 7-15TANK	1
	KVA DECAL: ERMCO STD KVA 2.5 YLW/CLR ON TANK	
	UNDER-OIL ARR.: SWITCHABLE CLU23 SERIES (ERMCO STD)	1
	FILL PORT: LIQ.LVL#85-02,TEMP#85-09,VAC#85-10	
	OIl TYPE: STD TX MINERAL OIL	
	TK|DR|SL: 304L SS	

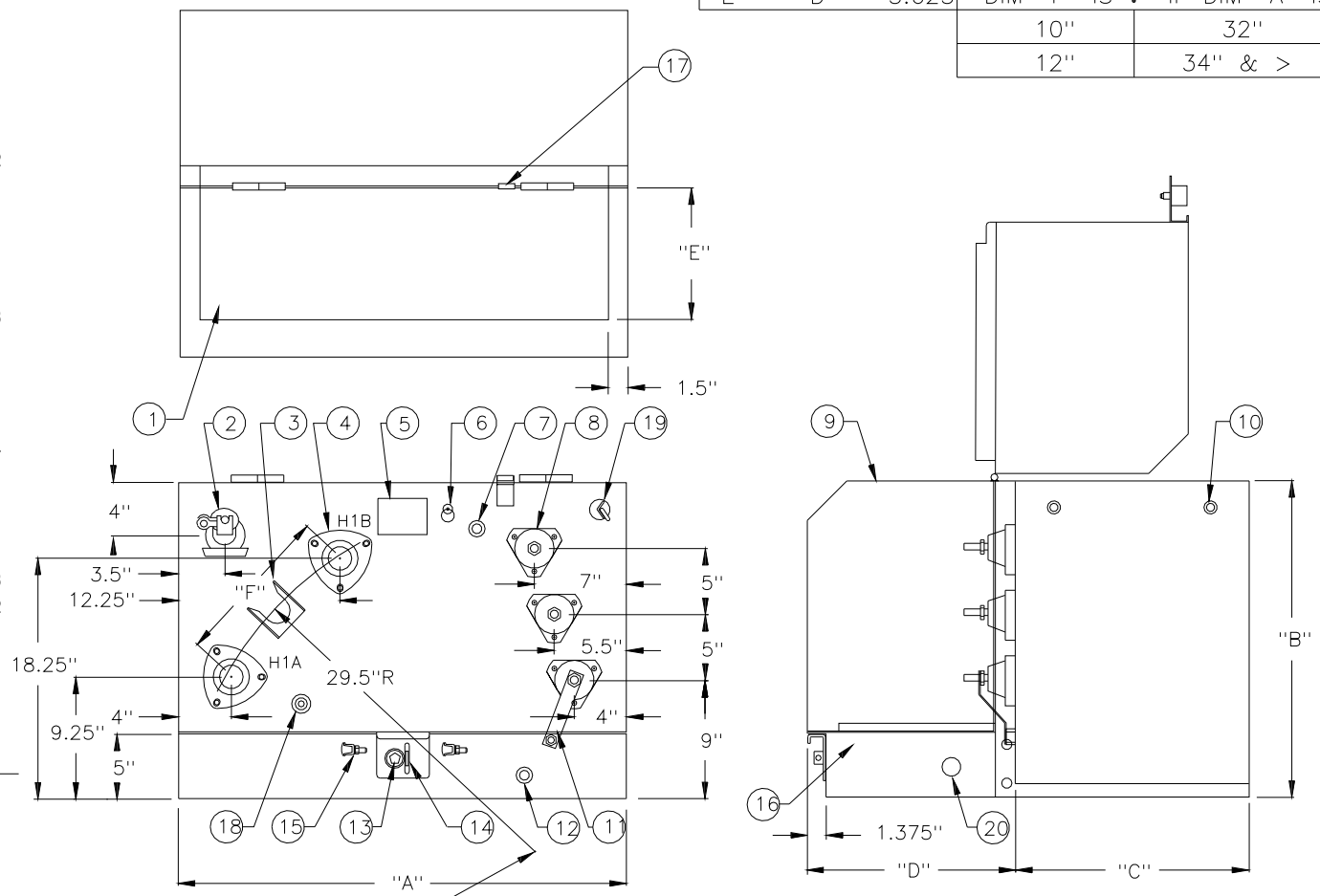

POINT 4" BELOW PAD SURFACE
10" RIGHT OF TRANS. CENTERLINE AND
12" IN FRONT OF TRANS. FRONT PANEL

ERMCO

CUSTOMER: GENERAL PACIFIC			RFQ/SPEC #:
SCALE: NTS	DATE: 05/01/25	BY: EAR	QUOTE NUMBER: 760384

** UNCONTROLLED **

QUOTE # 760384-00
CUSTOMER COPY QUOTED DATE 5/01/25

BILL TO:
GENERAL PACIFIC
P.O. BOX 70

FAIRVIEW OR97024

SHIP TO:
GENERAL PACIFIC
6050 TUTTLE PLACE ANCHORAGE,AK
C/O SPAN ALASKA
3815 W VALLEY HWY N
AUBURN WA98001

DESCRIPTION	PRODUCT NUMBER	QTY	UNIT PRICE	EXT PRICE

TRANSFORMER LOSS DATA IS BASED ON ANSI C57.12.00:
LOSS GRT: AVE VOLT% : 100
NL TEMP BASIS: 85 LL TEMP BASIS: 85
QUOTED PER THE DESCRIPTION PROVIDED WITH THE RFQ
ONLY, NO SPECIFICATION ON FILE

EVALUATED TO MEET DOE 2016 REQUIREMENTS
****
*RE-QUOTED TO HAVE FR3 FLUID, PER RFQ. ONLY
5/22/25 JCC **********
****

ITEM 1
PADMOUNT DIST. TRANSFORMER PADMOUNT 1
ITEM# : 1.00
INTERLACED N TANK DIAM .0 NON-MAG N STEEL TYP SI
NL= 257 LL= 1310 IZ=2.300 TL= 1567
OPTIONS BEGIN.....
TYP2A LOW PROFILE, ANSI STD. TYPE II
L LOOP FEED WITH 200 AMP STRAP 1 ea
167 167 KVA
060 4160GRDY/2400 60BIL 1BU
060G 4160GRDY/2400
003 2 AT 2.5% ABOVE & BELOW NORMAL
441 240/120 (3 LVBU ONLY) LHL
E58 GENERIC DUAL/LOAD (DS) BAYO & ISO
A00 ECI ISOLATION LINK BY CONFIGURATOR
003 GENERIC HV BUSH WELL 3-98 OR 3-135
000 COPPER STUD SECONDARY BUSHINGS.
400 4 HOLE NEMA H SPADES 3.50 WIDE
1 SWITCHABLE CLU23 SERIES(ERMCO STD)
00 ECI DISCONNECT SWITCH (STANDARD)
304 13GA 304L STAINLESS STEEL TANK
304 13GA 304L STAINLESS STEEL DOOR
304 13GA 304L STAINLESS STEEL SILL
12 STAINLESS STEEL PENTABOLT
13 GENERIC 10PSI 50SCFM FOR FR3 FLUID
1 ALL STAINLESS STEEL HARDWARE.
B STANDARD PALLET(CANNOT BE STACKED)
0 STD TX MINERAL OIL
OPTIONS END.....