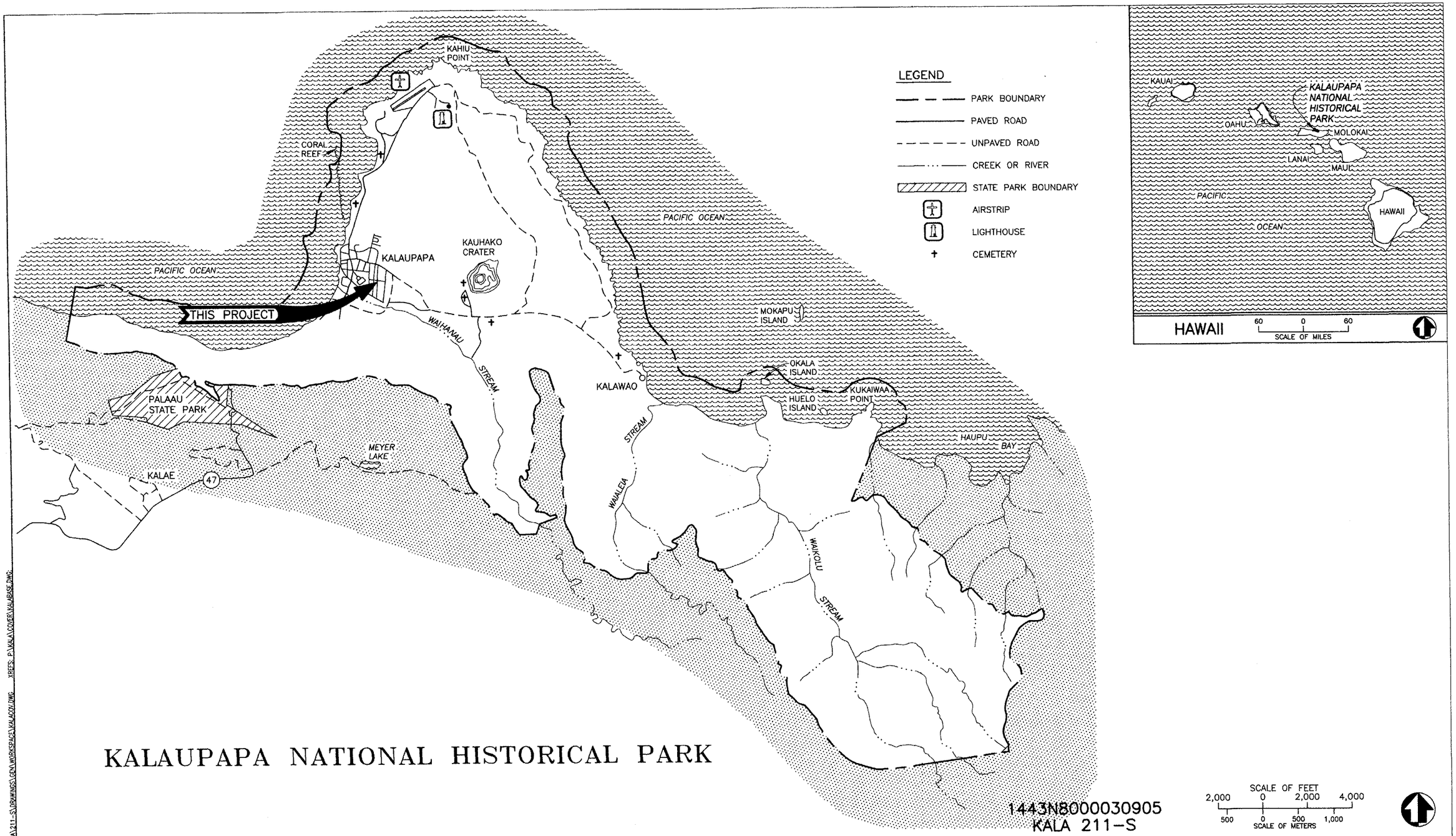

KALAUPAPA NATIONAL HISTORICAL PARK

1443N8000030905
KALA 211-S

RECOMMENDED: Project Manager 3·6·03 Date

APPROVED: /S/ Superintendent 3·6·03 Date

CONSTUCTION DRAWINGS

UNITED STATES
DEPARTMENT OF THE INTERIOR

NATIONAL PARK SERVICE
DENVER SERVICE CENTER

TITLE OF DRAWING
CURATORIAL STORAGE BUILDING, FIRE SUPPRESSION SYSTEMS
LOCATION WITHIN PARK
MOLOKAI
NAME OF PARK
KALAUPAPA NATIONAL HISTORICAL PARK
REGION PACIFIC WEST | COUNTY MAUI | STATE HAWAII

DRAWING NO. 491 / 41,016
PKG. NO. KALA 211-S
SHEET COVER OF 71

BASIC DATA: BOUNDARY MAP 491/80,023 2/80; MANUAL COVER SHEET 6/83; REVISED & REDRAWN 1/95. UPDATED 11/98. SGS.

3/6/03 16:04 M.TRACY R15 P:\KALA\211-S\DRAWINGS\GEN\WORKSPACE\KALACOV.DWG XREFS: P:\KALA\COVER\KALABASE.DWG

1/72

GENERAL NOTES

1. VERIFY ON SITE, ALL DIMENSIONS, EXISTING CONDITIONS AND THE INSTALLED WORKS OF OTHERS PRIOR TO TENDING BID. CONTRACTOR SHALL BE AWARE OF ALL EXISTING CONDITIONS INVOLVED IN THE DEMOLITION WORK AS INCLUDED WITHIN THE BID.
2. NOTIFY THE ARCHITECT IMMEDIATELY, IN WRITING, OF DISCREPANCIES OR MAJOR DEVIATIONS BETWEEN THESE DRAWINGS AND EXISTING CONDITIONS.
3. COMPLY WITH THE LATEST COUNTY, STATE AND FEDERAL LAWS, BUILDING CODES, THEIR ADDITIONS, ADDENDA AND AMENDMENTS IN THE CONSTRUCTION OF THIS PROJECT.
4. REPAIR DAMAGE CAUSED BY THE DEMOLITION AND/OR CONSTRUCTION DURING THIS PROJECT.
5. ALL STRUCTURES WITHIN THE KALAUPAPA SETTLEMENT ARE LISTED ON THE NATIONAL REGISTER OF HISTORIC PLACES

ISLAND OF HAWAII

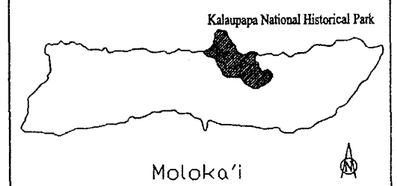

ABBREVIATIONS

A.B.	Anchor Bolt
A.C.	Air Conditioning
ACOUS.	Acoustical
A.D.	Area Drain
ADJ.	Adjustable
ADJA.	Adjacent
AGGR.	Aggregate
AL.	Aluminum
ALT.	Alternate
APPROX.	Approximate
ARCH.	Architectural
ASB.	Asbestos
ASPH.	Asphalt
BD.	Board
BLDG.	Building
BLK.	Block
BLKG.	Blocking
BM.	Beam
BOT.	Bottom
BR.	Bedroom
BRKT.	Bracket
CAB.	Cabinet
C.B.	Catch Basin
C.B.B.	Cement Backer Board
CEM.	Cement
CER.	Ceramic
C.I.	Cast Iron
CLG.	Ceiling
CLKG.	Caulking
CLO.	Closet
CLR.	Clear
C.M.U.	Concrete Masonry Unit
CNTR.	Counter
C.O.	Clean Out
COL.	Column
CONC.	Concrete
COND.	Condition
CONN.	connection
CONSTR.	Construction
CONT.	Continuous
CONTR.	Contractor
CORR.	Corridor
CTR.	Center
CTSK.	Countersunk
D.	Deep, Depth
D.A.	Double Acting
DBL.	Double
DEMO	Demolition
DEPT.	Department
DET.	Detail
D.F.	Drinking Fountain
DIA.	Diameter
DIM.	Dimension
DISP.	Dispenser
DN.	Down
DR.	Door
DS.	Downspout
D.S.P.	Dry Standpipe
DWG.	Drawing
DWR.	Drawer
E.	East
EA.	Each
E.I.F.S.	Exterior Insulation and Finish System
E.F.S	Exterior Finish System
E.J.	Expansion Joint
EL.	Elevation
ELEC.	Electrical
ELEV.	Elevator
EMER.	Emergency
ENCL.	Enclosure
E.P.	Electrical Panelboard
E.P.S.	Expanded Polystrene
EQ.	Equal
EQPT.	Equipment
E.W.C.	Electric Water Cooler
EXP.	Expansion
EXPO.	Exposed
EXST.	Existing
EXT.	Exterior
F.A.	Fire Alarm
F.B.	Flat Bar
F.D.	Floor Drain
FDN.	Foundation
F.E.	Fire Extinguisher
F.E.C.	Fire Exting. Cab.
F.H.C.	Fire Hose Cabinet
FIN.	Finish
FIX.	Fixture
FL.	Floor
FLASH.	Flashing
FLDG.	Folding
FLUOR.	Fluorescent
F.O.C.	Face of Concrete
F.O.F.	Face of Finish
F.O.S.	Face of Studs
FPRF.	Fireproof
FR.	Frame
F.S.	Full Size
FT.	Foot or Feet
FTG.	Footing
FURR.	Furring
FUT.	Future
GA.	Gauge
GALV.	Galvanized
G.B.	Grab Bar
G.I.	Galvanized Iron
GL.	Glass
GND.	Ground
GR.	Grade
GYP.	Gypsum
H.	High
H.B.	Hose Bibb
H.C.	Hollow Core
HDWD.	Hardwood
HDWR.	Hardware
H.M.	Hollow Metal
HORIZ.	Horizontal
HR.	Hour
HGT.	Height
I.D.	Inside Diameter
INCL.	Inclusive,Included or Including
INSUL.	Insulation
INT.	Interior
JAN.	Janitor
JNT.	Joint
KIT.	Kitchen
K.O.	Knock-Out
LAUND.	Laundry
LAB.	Laboratory
LAM.	Laminate
LAV.	Lavatory
LKR.	Locker
L.R.	Living Room
L.R.V.	Low Rock Veneer
L.R.W.	Low Rock Wall
LT.	Light
MAX.	Maximum
M.B.R.	Master Bedroom
M.C.	Medicine Cabinet
MECH.	Mechanical
MEMB.	Membrane
MET.	Metal
MFR.	Manufacturer
MH.	Manhole
MIN.	Minimum
MIR.	Mirror
MISC.	Miscellaneous
M.O.	Masonry Opening
MTD.	Mounted
MTG.	Mounting
MUL.	Mullion
M.R.	Map Rock
N.C.	Not In Contract
NO. or #	Number
NOM.	Nominal
N.T.S.	Not To Scale
O.A.	Overall
OBS.	Obscure
O.C.	On Center
O.D.	Outside Diameter (Dim.)
O.F.C.I.	Owner Furnished-Contractor Installed
OFF.	Office
OPNG.	Opening
OPP.	Opposite
PC.	Piece
PL.	Plate
P. LAM.	Plastic Laminate
PLAS.	Plaster
PLMB.	Plumbing
PLYWD.	Plywood
PNL.	Panel
PR.	Pair
PRECAST.	Precast
PT.	Point
P.T.D.	Paper Towel
P.T.D./R.	Dispenser Combination Paper Towel Dispenser & Receptacle
PTN.	Partition
P.T.R.	Paper Towel Receptacle
Q.T.	Quarry Tile
QTR.	Quarter
R.	Riser
RAD.	Radius
R.D.	Roof Drain
REF.	Reference
REINF.	Reinforced or Reinforcing
REQ.	Required
RESIL.	Resilient
REGIS.	Register
RM.	Room
RND.	Round
R.O.	Rough Opening
REDWD.	Redwood
R.W.L.	Rain Water Leader
S.	South
S.A.	Single Acting
S.C.	Solid Core
SCHED.	Schedule
SCR.	Screen
S.D.	Soap Dispenser
SECT.	Section
SH.	Shelf
SHR.	Shower
SHT.	Sheet
SIM.	Similar
SK.	Skylight
S.L.	Sealant
SLDG.	Sliding
S.M.H.	Sewer Man Hole
S.N.D.	Sanitary Napkin Dispenser
S.N.R.	Sanitary Napkin Receptacle
SPEC.	Specification
SQ.	Square
SST.	Stainless Steel
S. SK.	Service Sink
STA.	Station
STD.	Standard
STL.	Steel
STOR.	Storage
STRL.	Structural
SURR.	Surround
SUSP.	Suspended
SYM.	Symmetrical
T.B.	Towel Bar
T.C.	Top of Curb
TEL.	Telephone
TEMP.	Tempered
TER.	Terazzo
T. & G.	Tongue and Groove
THK.	Thick
THR.	Threshold
T.P.	Top of Pavement
T.P.D.	Toilet Paper Dispenser
T.P.H.	Toilet Paper Holder
TRD.	Tread
T.V.	Television
T.W.	Top of Wall
TYP.	Typical
UR.	Urinal
U.O.N.	Unless Otherwise Noted
U.L.	Underwriters Laboratory
V.C.T.	Vinyl Composition Tile
V.T.R.	Vent Thru Roof
VERT.	Vertical
VEST.	Vestibule
W.	West
W/	With
W.C.	Water Closet
WD.	Wood
WDW.	Window
W.H.	Water Heater
W/O	Without
W.O.	Where Occurs
WP.	Waterproof
W.R.	Water Resistant
WSCT.	Wainscot
W.S.P.	Wet Stand Pipe
WT.	Weight
W.W.M.	Welded Wire Mesh

DRAWING INDEX

SHEET NO. -	SUB SHT. NO.	TITLE
COVER		COVER SHEET
1	T1	ABBREVIATIONS, MAPS, PROJECT DATA, LEGEND, SYMBOL LIST & CONSULTANTS.
2	A1	MAPS
3	C1	CONSTRUCTION NOTES
4	C2	BAYVIEW UNITS, BLDG. 281 & BLDG. 286 FIRE LINE PLAN
5	C3	BAYVIEW UNITS, BLDG. 281 & BLDG. 286 FIRE LINE PLAN
6	C4	McVEIGH UNITS FIRE LINE PLAN
7	C5	CURATORIAL BUILDING SITE LAYOUT PLAN
8	C6	CURATORIAL BUILDING SITE GRADING PLAN
9	C7	CURATORIAL BUILDING SITE UTILITIES PLAN
10	C8	BAYVIEW UNITS FIRE SPRINKLER PROFILES
11	C9	BAYVIEW UNITS FIRE DEPARTMENT CONNECTION PROFILES
12	C10	BAYVIEW UNITS FIRE DEPARTMENT CONNECTION PROFILES
13	C11	McVEIGH UNITS FIRE SPRINKLER PROFILES
14	C12	McVEIGH UNITS FIRE DEPARTMENT CONNECTION PROFILES
15	C13	CURATORIAL BUILDING WATER LINE AND FIRE LINE PROFILES
16	C14	BLDGS. 281 & 286 FIRE SPRINKLER AND FIRE DEPARTMENT CONNECTION PROFILES
17	C15	DETAILS
18	A21	CURATORIAL FACILITY - FLOOR PLAN, ROOM FINISH SCHEDULE, MATERIAL INDEX & DETAILS.
19	A22	CURATORIAL FACILITY - REFLECTED CEILING PLAN & DETAILS
20	A23	CURATORIAL FACILITY - ROOF PLAN & DETAILS.
21	A24	CURATORIAL FACILITY - CROSS SECTIONS & TYP. WALL SECTIONS
22	A25	CURATORIAL FACILITY - EXTERIOR ELEVATIONS.
23	A26	CURATORIAL FACILITY - DOOR SCHEDULE TYPES & DETAILS.
24	A27	CURATORIAL FACILITY - WINDOW SCHEDULE TYPES & DETAILS.
25	A28	CURATORIAL FACILITY - INTERIOR ELEVATIONS
26	A29	CURATORIAL FACILITY - INTERIOR ELEVATIONS
27	A210	CURATORIAL FACILITY - DETAILS
28	S01	GENERAL NOTES
29	S11	TYPICAL DETAILS
30	S12	TYPICAL DETAILS
31	S13	TYPICAL DETAILS
32	S14	TYPICAL DETAILS
33	S15	TYPICAL DETAILS
34	S16	TYPICAL DETAILS
35	S17	TYPICAL DETAILS
36	S21	FOUNDATION PLAN
37	S23	FLOOR FRAMING PLAN
38	S24	ROOF FRAMING PLAN
39	S25	SECTIONS & DETAILS
40	S26	SECTIONS & DETAILS
41	S27	SECTIONS & DETAILS
42	M1	GENERAL NOTES, FIRE PROTECTION NOTES MECHANICAL LEGEND & DETAILS.
43	M2	CURATORIAL FACILITY - PLUMBING FLOOR PLANS
44	M3	CURATORIAL FACILITY - FIRE PROTECTION FLOOR PLAN
45	M4	CURATORIAL FACILITY - AIR CONDITIONING AND VENTILATION FLOOR PLAN
46	M5	CURATORIAL FACILITY - AIR CONDITIONING AND VENTILATION DETAIL FLOOR PLANS
47	M6	CURATORIAL FACILITY - SANITARY AND WATER PIPING DIAGRAMS
48	M7	BAYVIEW 1 - FIRE PROTECTION FLOOR PLAN BID OPTION #1
49	M8	BAYVIEW 2 - FIRE PROTECTION FLOOR PLAN BID OPTION #2
50	M9	BAYVIEW 3 - FIRE PROTECTION FLOOR PLAN BID OPTION #3
51	M10	BAYVIEW 5 - FIRE PROTECTION FLOOR PLAN BID OPTION #4
52	M11	BAYVIEW 6 - FIRE PROTECTION FLOOR PLAN BID OPTION #5
53	M12	McVEIGH 11 - FIRE PROTECTION FLOOR PLAN BID OPTION #6
54	M13	McVEIGH 12 - FIRE PROTECTION FLOOR PLAN BID OPTION #7
55	M14	McVEIGH 23 - FIRE PROTECTION FLOOR PLAN BID OPTION #8
56	M15	McVEIGH 28 - PLUMBING, FIRE PROTECTION FLOOR PLAN BID OPTION #9
57	M16	BLDG. 286 - FIRE PROTECTION FLOOR PLAN BID OPTION #10
58	M17	BLDG. 281 - FIRE PROTECTION FLOOR PLAN BID OPTION #11
59	M18	DETAILS
60	M19	DETAILS
61	M20	DETAILS
62	M21	EQUIPMENT SCHEDULES
63	E11	ELECTRICAL SYMBOLS, DEMOLITION NOTES, LUMINAIRE DETAILS
64	E12	LUMINAIRE DETAILS
65	E13	LUMINAIRE DETAILS
66	E21	PARTIAL ELECTRICAL SITE PLAN
67	E31	CURATORIAL FACILITY - LIGHTING PLAN
68	E32	CURATORIAL FACILITY - POWER & SIGNAL PLAN
69	E33	CURATORIAL FACILITY - SINGLE LINE DIAGRAM, PANEL SCHEDULE, ELECTRICAL SERVICE EQUIPMENT ELEVATION, SWITCHBANK DETAIL, NIGHTLIGHT CONTROL DIAGRAM, FIRE ALARM RISER DIAGRAM, FIRE ALARM NOTES, TRANFORMER PAD DETAIL
70	E34	CURATORIAL FACILITY - PANEL SCHEDULES
71	E35	CURATORIAL FACILITY - POLE DETAIL, POLE MATERIAL SCHEDULE

LEGEND

- -DOOR NUMBER
- -WINDOW NUMBER
- SCOPE NOTE (SEE 'AS INDICATED' LISTING PER SHEET)
- -ROOF TRUSS LINE REFERENCE
- SECTION/DETAIL REFERENCE
  - REFERENCE NUMBER
  - SHT. WHERE REFERENCE IS DRAWN
  - SHT. WHERE REFERENCE OCCURS
- COLOR CODE
- DETAIL ELEVATION
- SECTIONS

CONSULTANTS

ARCHITECT: SPENCER ARCHITECTS, INC.
1810 UNIVERSITY AVE. #201
HONOLULU, HAWAII 96822
PH: (808) 955-9595
FAX: (808) 944-9175

CIVIL ENGINEER: SAM O. HIROTA & CO.
864 SOUTH BERETANIA
HONOLULU, HAWAII 96813
PH: (808) 531-9911
FAX: (808) 524-6313

STRUCTURAL ENGINEER: MARTIN, BRAVO AND CHOCK
1132 BISHOP STREET, #550
HONOLULU, HAWAII 96813
PH: (808) 521-4513
FAX: (808) 531-4500

MECHANICAL ENGINEER: MECHANICAL ENGINEERS OF HAWAII
50 S. BERETANIA STREET, C208A
HONOLULU, HAWAII 96813
PH: (808) 521-8981
FAX: (808) 536-5457

ELECTRICAL ENGINEER: ELECTECH HAWAII, INC. (LEING & PANG, INC.)
1100 WARD AVE., #150
HONOLULU, HAWAII 96814
PH: (808) 572-1366
FAX: (808) 521-4813

HAZARDOUS MATERIALS/ SOIL ENGINEER: HARDING ESE
98-1247 KAAHUMANU STREET, SUITE 305
AIEA, HAWAII 96701
PH: (808) 486-6009
FAX: (808) 486-7184

COST ESTIMATE: COST ENGINEERING
2055 NORTH KING STREET, SUITE 203
HONOLULU, HAWAII 96819
PH: (808) 848-2128
FAX: (808) 845-0854

FMIS NUMBER 4802

This work was prepared by me or under my supervision, and construction of this project will be under my observation.

DESIGNED: SL	SUB SHEET NO.	TITLE OF SHEET	DRAWING NO. 491 / 41,016
DRAWN: UL	T1	MAP, ABBREVIATIONS, GENERAL NOTES, CONSULTANTS LEGEND, SYMBOL LIST & DRAWING INDEX	PKG. NO. KALA 211-S
TECH. REVIEW:		Kalaupapa National Historical Park	SHEET 1 OF 71
DATE: 7/21/03			

SAI-T1.DWG 02/01/02 11:54

2/72

VICINITY MAP
NO SCALE

SPENCER A. LEINGEWEBER
LICENSED PROFESSIONAL ARCHITECT
No. 4269
HAWAII, U.S.A.

This work was prepared by me or under my supervision, and construction of this project will be under my observation.

DESIGNED: SL	SUB SHEET NO.	TITLE OF SHEET	DRAWING NO. 491 / 41,016
DRAWN: WL	A1	MAPS	PKG. NO. KALA 211-5
TECH. REVIEW:		Kalaupapa National Historical Park	SHEET 2 OF 71
DATE: 2/21/03			

3/72

GENERAL NOTES:

1. VERIFY AND CHECK ALL DIMENSIONS AND DETAILS ON THE DRAWINGS FOR ANY DISCREPANCY. ANY DISCREPANCY SHALL BE BROUGHT TO THE ATTENTION OF THE ENGINEER.
2. WORK INCIDENTAL TO THE CONTRACT AND NECESSARY TO COMPLETE THE PROJECT, ALTHOUGH NOT SPECIFICALLY REFERRED TO ON THE CONTRACT DOCUMENTS, SHALL BE FURNISHED AND PERFORMED BY THE CONTRACTOR.
3. THE LOCATIONS SHOWN ON THE CONTRACT DRAWINGS OF THE VARIOUS EXISTING UTILITY LINES WHICH THE NEW LINES ARE TO CONNECT TO, WERE DETERMINED ON THE BASIS OF THE BEST INFORMATION AVAILABLE. THEREFORE, NO ASSURANCE CAN BE PROVIDED THAT THE ACTUAL LOCATIONS WILL BE PRECISELY AS SHOWN ON THE CONTRACT DRAWINGS. THE CONTRACTOR SHALL VERIFY THE LOCATIONS AND DEPTHS OF THE FACILITIES AND EXERCISE PROPER CARE IN EXCAVATING IN THE AREA. THE CONTRACTOR SHALL BE RESPONSIBLE FOR ANY DAMAGES TO THE FACILITIES. LOCATIONS OF EXISTING UTILITY LINES SHOWN ON PLAN AND PROFILE ARE APPROXIMATE ONLY.
4. IN PERFORMING ALL WORK, THE CONTRACTOR SHALL EXERCISE DUE CARE AND CAUTION NECESSARY TO AVOID ANY DAMAGE TO AND IMPAIRMENT IN THE USE OF ANY EXISTING UTILITY LINE. ANY DAMAGE INFLICTED ON EXISTING UTILITY LINES RESULTING FROM THE CONTRACTOR'S OPERATIONS SHALL BE IMMEDIATELY REPAIRED OR RESTORED AS DIRECTED BY THE CONTRACTING OFFICER AT THE CONTRACTOR'S EXPENSE.
5. THE CONTRACTOR AGREES THAT HE SHALL ASSUME SOLE AND COMPLETE RESPONSIBILITY FOR THE JOB SITE CONDITIONS DURING THE COURSE OF CONSTRUCTION OF THIS PROJECT, INCLUDING THE SAFETY OF ALL PERSONS AND PROPERTY; THAT THIS REQUIREMENT SHALL APPLY CONTINUOUSLY AND NOT BE LIMITED TO NORMAL WORKING HOURS; AND THAT THE CONTRACTOR SHALL DEFEND, INDEMNIFY AND HOLD THE GOVERNMENT AND ENGINEER HARMLESS FROM ANY AND ALL LIABILITY, REAL OR ALLEGED, IN CONNECTION WITH THE PERFORMANCE OF WORK ON THIS PROJECT, EXCEPTING FOR LIABILITY ARISING FROM THE SOLE NEGLIGENCE OF THE GOVERNMENT OR THE ENGINEER.

WATER NOTES:

1. UNLESS OTHERWISE SPECIFIED, ALL MATERIALS AND CONSTRUCTION OF WATER SYSTEM FACILITIES AND APPURTENANCES SHALL BE IN ACCORDANCE WITH THE PROJECT SPECIFICATIONS.
2. THE CONTRACTOR SHALL BE RESPONSIBLE FOR THE PROTECTION OF ALL WATER LINES DURING CONSTRUCTION. THE CONTRACTOR SHALL BE ESPECIALLY CAREFUL WHEN EXCAVATING BEHIND WATER LINES, TEES, AND BENDS WHEREVER THERE IS A POSSIBILITY OF WATER LINE MOVEMENT DUE TO THE REMOVAL OF SUPPORTING EARTH BEYOND THE EXISTING REACTION BLOCKS. THE CONTRACTOR SHALL TAKE WHATEVER MEASURES NECESSARY TO PROTECT THE WATER LINES, SUCH AS CONSTRUCTING SPECIAL REACTION BLOCKS AND/OR MODIFYING HIS CONSTRUCTION METHOD.
3. MAINTAIN 0.914M MIN. HORIZONTAL CLEAR SEPARATION BETWEEN ALL WATERLINE SYSTEMS AND NEAREST ELECTRICAL/SIGNAL DUCTLINES PARALLELING THE WATER SYSTEM.
4. TRACE WIRES SHALL BE BROUGHT UP TO LEVEL OF VALVE BOX FOR BETTER TRACING.
5. UPON COMPLETION OF DISINFECTION, CONTRACTOR SHALL PROVIDE CERTIFICATION FOR ALL TESTING.
6. ALL ABANDONED PIPE OPENINGS SHALL BE MECHANICALLY CAPPED AND THRUST BLOCKS SHALL BE INSTALLED.

NOTES FOR CONSTRUCTION

1. WHEN TRENCH EXCAVATION IS ADJACENT TO OR UNDER EXISTING STRUCTURES OR FACILITIES, THE CONTRACTOR SHALL BE RESPONSIBLE FOR PROPERLY SHEETING AND BRACING THE EXCAVATION AND STABILIZING THE EXISTING GROUND TO RENDER IT SAFE AND SECURE FROM POSSIBLE SLIDES, CAVE INS AND SETTLEMENT, AND FOR PROPERLY SUPPORTING EXISTING STRUCTURES AND FACILITIES WITH BEAMS, STRUTS OR UNDERPINNING TO FULLY PROTECT IT FROM DAMAGE.
2. BACKFILL UNDER EXISTING STRUCTURES OR FACILITIES SHALL BE SANDY OR GRANULAR MATERIAL COMPLETELY PLACED AS SOON AS THE PIPE IS LAID AND TESTED. THE BACKFILL MATERIAL SHALL BE RAMMED WITH PROPER TOOLS UNTIL COMPACTED TO NOT LESS THAN 90% OF ITS MAXIMUM DENSITY.
3. THE CONTRACTOR SHALL RESTORE TO THEIR ORIGINAL CONDITION ALL IMPROVEMENTS DAMAGED AS A RESULT OF THE CONSTRUCTION, INCLUDING PAVEMENTS, EMBANKMENTS, CURBS, SIGNS, LANDSCAPING, STRUCTURES, UTILITIES, WALLS, FENCES, ETC. UNLESS PROVIDED FOR SPECIFICALLY IN THE PROPOSAL. DEMOLITION AND RESTORATION OF EXISTING ITEMS SHALL BE INCIDENTAL AND INCLUDED WITHIN THE AMOUNT PAID FOR UNCLASSIFIED TRENCH EXCAVATION.
4. THE CONTRACTOR SHALL OBSERVE AND COMPLY WITH ALL LOCAL LAWS IN DISPOSING OF WATER FROM THE WATER MAIN FOLLOWING TESTING, DISINFECTION, ETC.
5. THE CONTRACTOR IS RESPONSIBLE TO KEEP ALL EXISTING UTILITIES IN OPERATION THROUGHOUT THE CONSTRUCTION. INTERRUPTION OF ANY EXISTING UTILITIES SHALL BE COORDINATED WITH THE NPS.
6. SHOULD THE CONTRACTOR ENCOUNTER ARCHAEOLOGICAL ARTIFACTS DURING EXCAVATION, WORK SHOULD STOP IMMEDIATELY. THE CONTRACTOR SHALL CONTACT A NPS REPRESENTATIVE BEFORE PROCEEDING.

DENNIS I. HIROTA
LICENSED PROFESSIONAL ENGINEER
No. 5577-C
HAWAII U.S.A.

THIS WORK WAS PREPARED BY ME OR UNDER MY SUPERVISION.

DATE

DESIGNED JH	SUB SHEET NO.	TITLE OF SHEET	DRAWING NO. 491 / 41,016
DRAWN: DH	C1	CONSTRUCTION NOTES	PKG. NO. KALA 211-S
TECH. REVIEW: ST		Kalaupapa National Historical Park	SHEET 3 OF 71
DATE: 2/21/03			

4/72

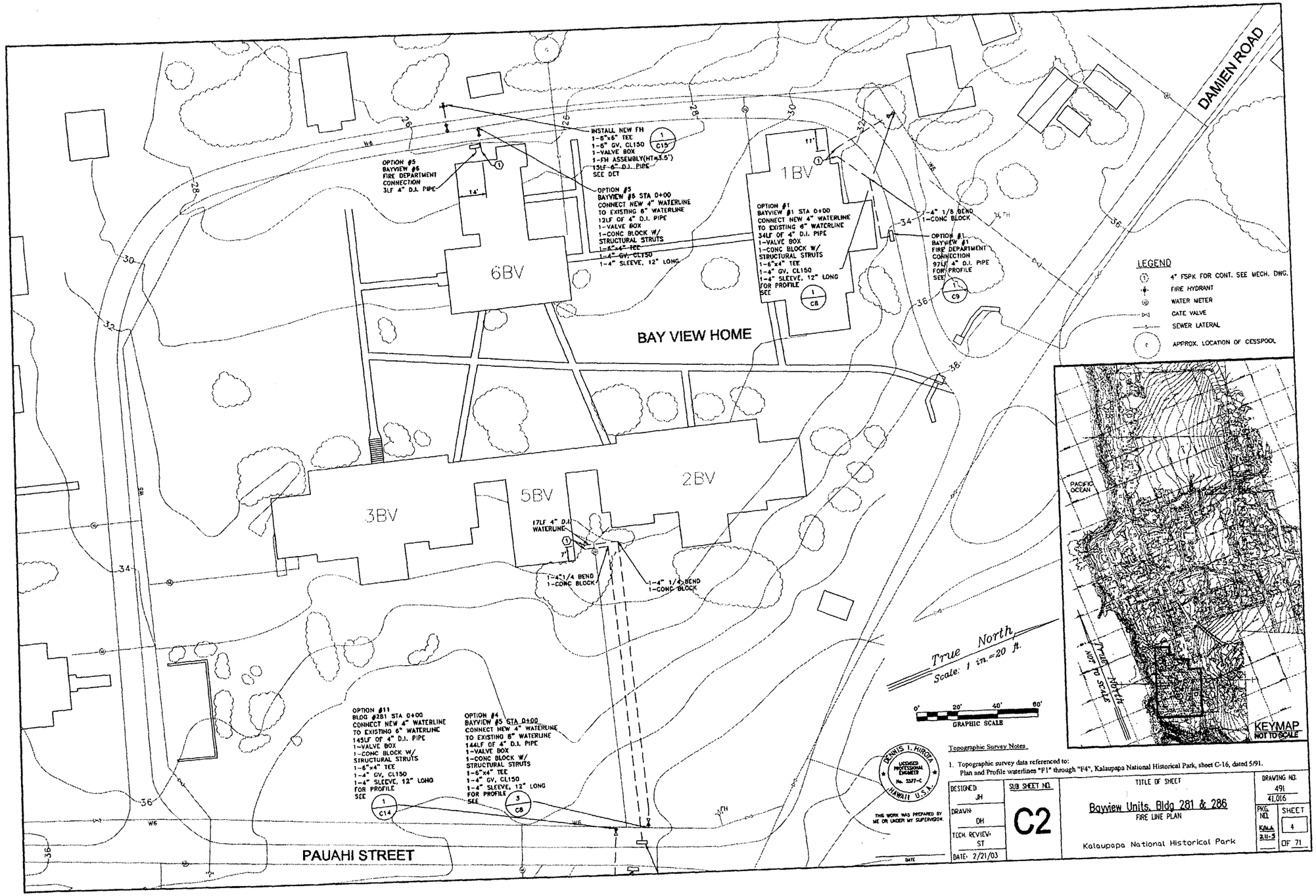

Topographic Survey Notes

1. Topographic survey data referenced to:
Plan and Profile waterlines "F1" through "F4", Kalaupapa National Historical Park, sheet C-16, dated 5/91.

DESIGNED JH	SUB SHEET NO.	TITLE OF SHEET	DRAWING NO. 491 / 41,016
DRAWN DH	C2	Bayview Units, Bldg 281 & 286 FIRE LINE PLAN	PKG. NO. KAL-2.H-5
TECH. REVIEW ST		Kalaupapa National Historical Park	SHEET 4 OF 71
DATE 2/21/03			

5/72

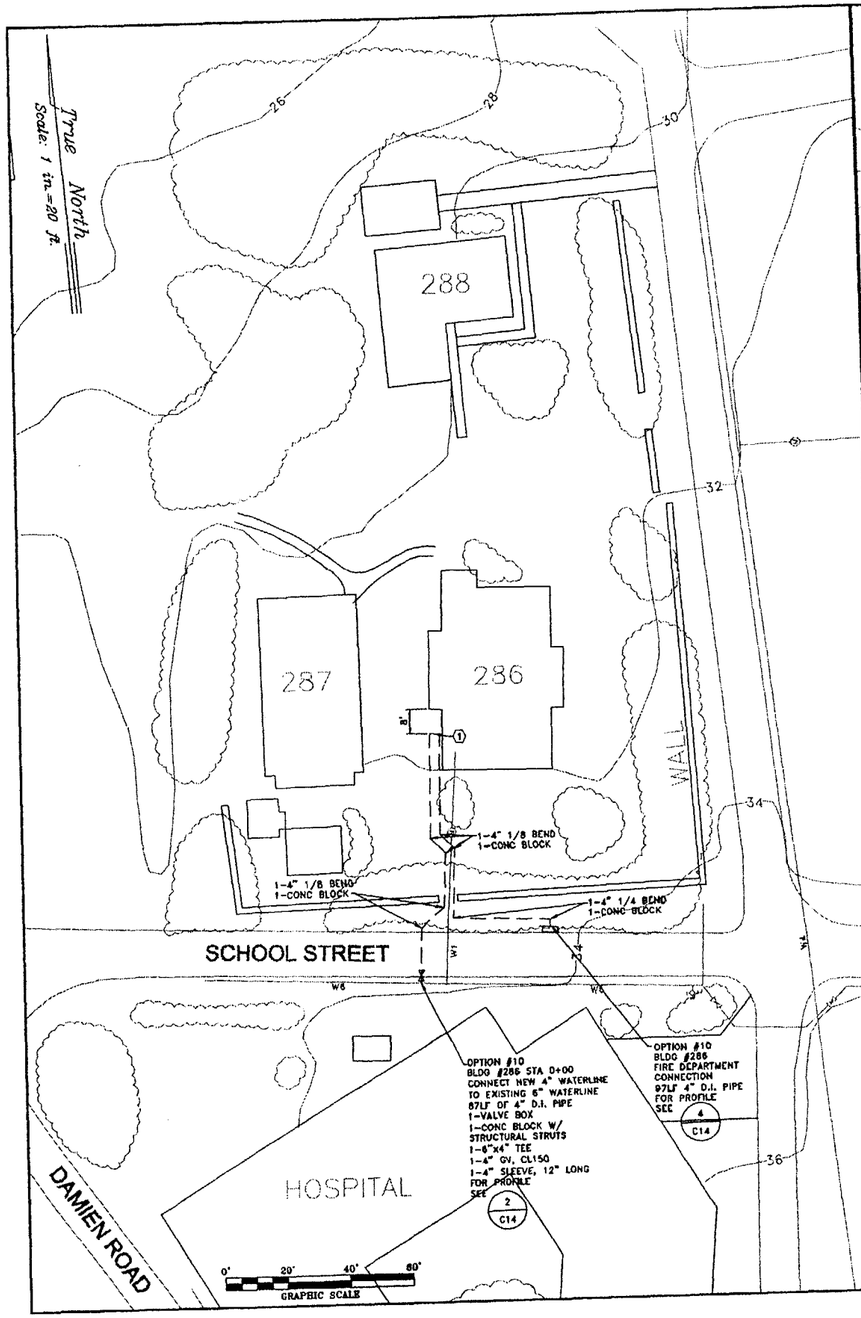

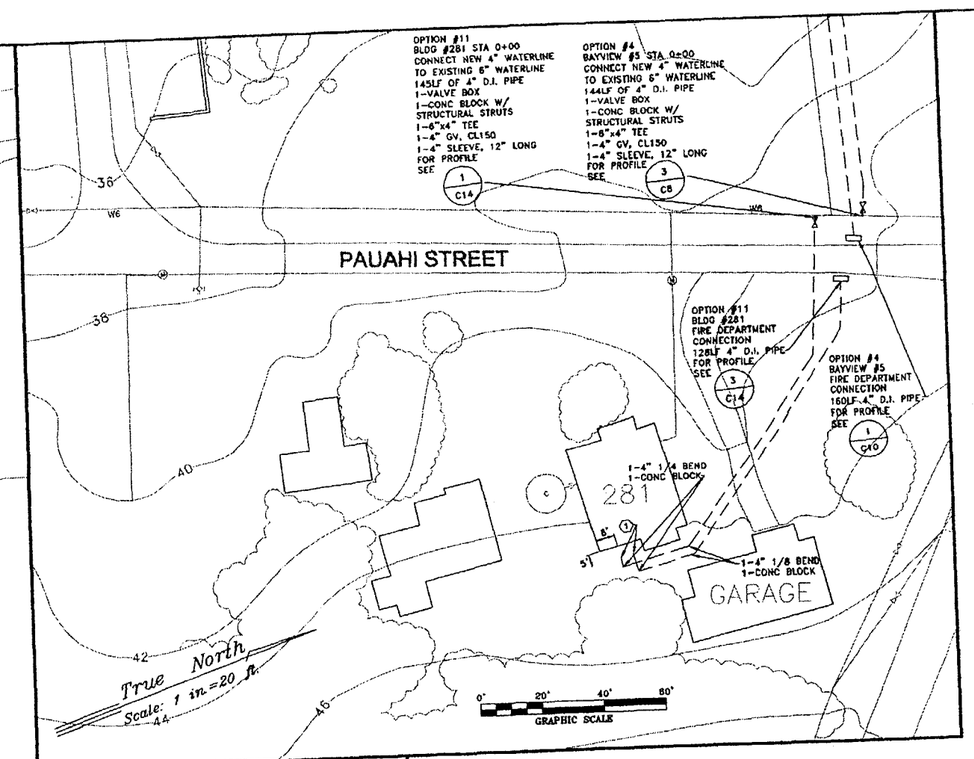

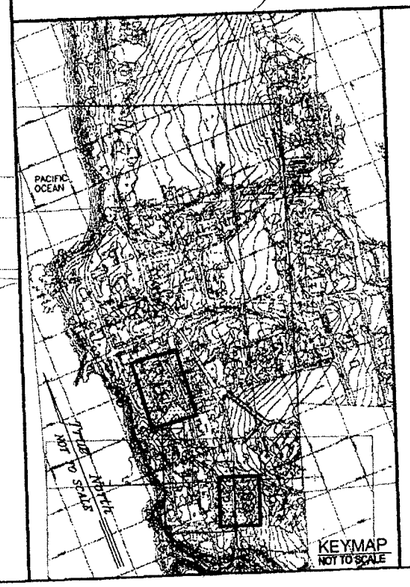

LEGEND

- (1) 4" FSPK FOR CONT. SEE MECH. DWG.
- FIRE HYDRANT
- (W) WATER METER
- GATE VALVE
- SEWER LATERAL
- (C) APPROX. LOCATION OF CESSPOOL

Topographic Survey Notes

1. Topographic survey data referenced to:
   Plan and Profile waterlines "F1" through "F4", Kalaupapa National Historical Park, sheet C-16, dated 5/91.

DENNIS I. HIROTA
LICENSED PROFESSIONAL ENGINEER
No. 5377-C
HAWAII U.S.A.

THIS WORK WAS PREPARED BY ME OR UNDER MY SUPERVISION.

DATE

DESIGNED JH	SUB SHEET NO.	TITLE OF SHEET	DRAWING NO. 491 / 41,016
DRAWN DH	C3	Bayview Units, Bldg 281 & 286 FIRE LINE PLAN	PKG. NO. KALA 211-3
TECH. REVIEW ST		Kalaupapa National Historical Park	SHEET 5 OF 71
DATE 2/21/03			

6/72

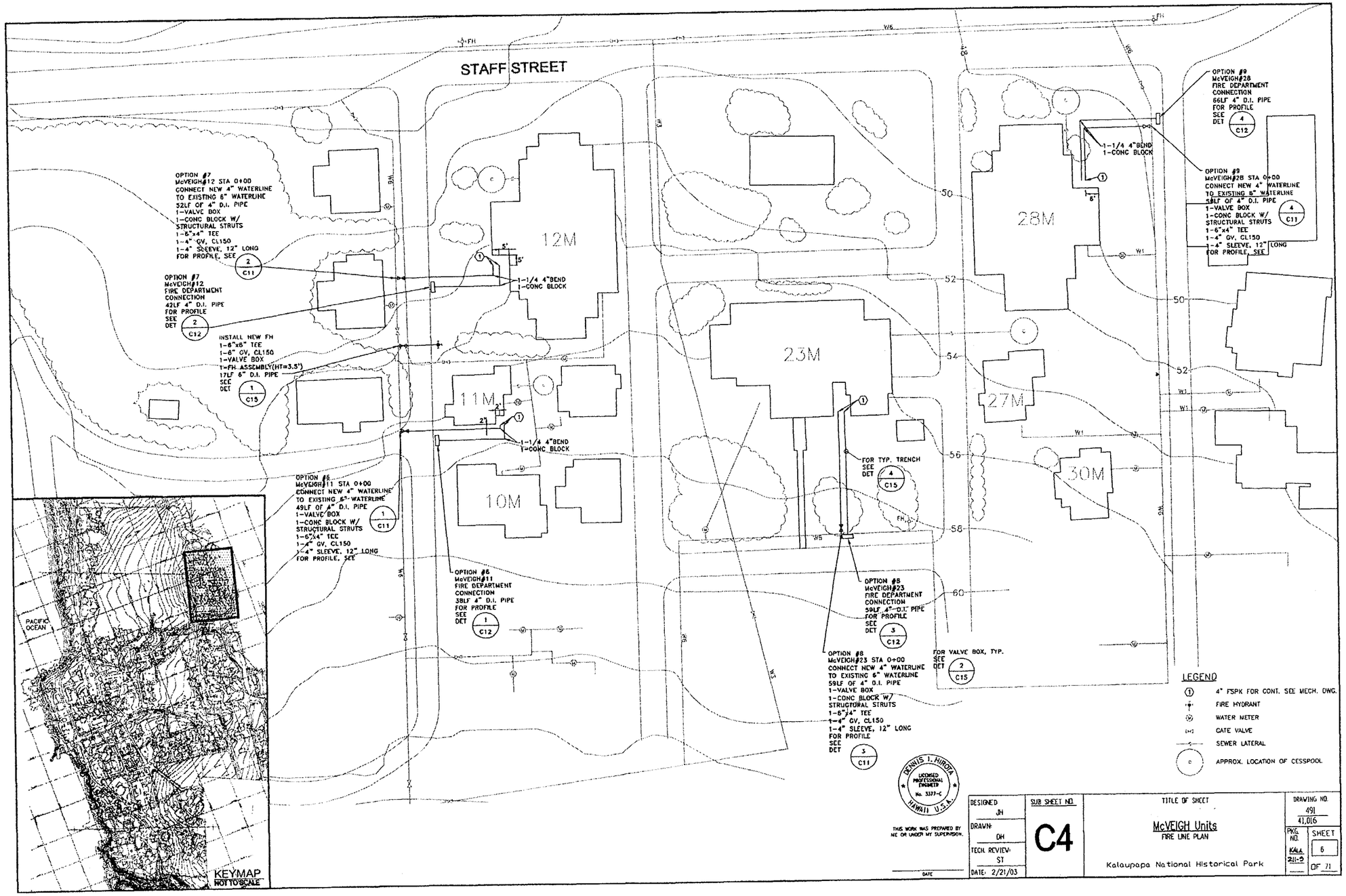
STAFF STREET
12M
11M
10M
23M
28M
27M
30M
OPTION #7
McVEIGH#12 STA 0+00
CONNECT NEW 4" WATERLINE
TO EXISTING 6" WATERLINE
52LF OF 4" D.I. PIPE
1-VALVE BOX
1-CONC BLOCK W/
STRUCTURAL STRUTS
1-6"x4" TEE
1-4" GV, CL150
1-4" SLEEVE, 12" LONG
FOR PROFILE, SEE
2
C11
OPTION #7
McVEIGH#12
FIRE DEPARTMENT
CONNECTION
42LF 4" D.I. PIPE
FOR PROFILE
SEE
DET
2
C12
INSTALL NEW FH
1-6"x6" TEE
1-6" GV, CL150
1-VALVE BOX
1-FH ASSEMBLY(HT=3.5')
17LF 6" D.I. PIPE
SEE
DET
1
C15
1-1/4 4"BEND
1-CONC BLOCK
OPTION #6
McVEIGH#11 STA 0+00
CONNECT NEW 4" WATERLINE
TO EXISTING 6" WATERLINE
49LF OF 4" D.I. PIPE
1-VALVE BOX
1-CONC BLOCK W/
STRUCTURAL STRUTS
1-6"x4" TEE
1-4" GV, CL150
1-4" SLEEVE, 12" LONG
FOR PROFILE, SEE
1
C11
OPTION #6
McVEIGH#11
FIRE DEPARTMENT
CONNECTION
38LF 4" D.I. PIPE
FOR PROFILE
SEE
DET
1
C12
FOR TYP. TRENCH
SEE
DET
4
C15
OPTION #8
McVEIGH#23
FIRE DEPARTMENT
CONNECTION
59LF 4"-D.I. PIPE
FOR PROFILE
SEE
DET
3
C12
OPTION #8
McVEIGH#23 STA 0+00
CONNECT NEW 4" WATERLINE
TO EXISTING 6" WATERLINE
59LF OF 4" D.I. PIPE
1-VALVE BOX
1-CONC BLOCK W/
STRUCTORAL STRUTS
1-6"x4" TEE
1-4" GV, CL150
1-4" SLEEVE, 12" LONG
FOR PROFILE
SEE
DET
3
C11
FOR VALVE BOX, TYP.
SEE
DET
2
C15
OPTION #9
McVEIGH#28
FIRE DEPARTMENT
CONNECTION
66LF 4" D.I. PIPE
FOR PROFILE
SEE
DET
4
C12
OPTION #9
McVEIGH#28 STA 0+00
CONNECT NEW 4" WATERLINE
TO EXISTING 6" WATERLINE
58LF OF 4" D.I. PIPE
1-VALVE BOX
1-CONC BLOCK W/
STRUCTURAL STRUTS
1-6"x4" TEE
1-4" GV, CL150
1-4" SLEEVE, 12" LONG
FOR PROFILE, SEE
4
C11
PACIFIC OCEAN
KEYMAP
NOT TO SCALE
LEGEND
4" FSPK FOR CONT. SEE MECH. DWG.
FIRE HYDRANT
WATER METER
GATE VALVE
SEWER LATERAL
APPROX. LOCATION OF CESSPOOL
DENNIS I. HIROTA
LICENSED PROFESSIONAL ENGINEER
No. 5377-C
HAWAII U.S.A.
THIS WORK WAS PREPARED BY ME OR UNDER MY SUPERVISION.
DATE
DESIGNED JH
DRAWN DH
TECH. REVIEW ST
DATE 2/21/03
SUB SHEET NO
C4
TITLE OF SHEET
McVEIGH Units
FIRE LINE PLAN
Kalaupapa National Historical Park
DRAWING NO.
491
41,016
PKG. NO.
KALA 211-3
SHEET
6
OF 71

7/72

COLUMN INTERSECTION	REFERENCE FROM TRAV C-1	
	DISTANCE	DIRECTION
A1	148.42	132°39'02.75"
A2	79.67	185°11'07.01"
B1	126.15	104°43'27.75"
B2	11.73	150°55'50.14"

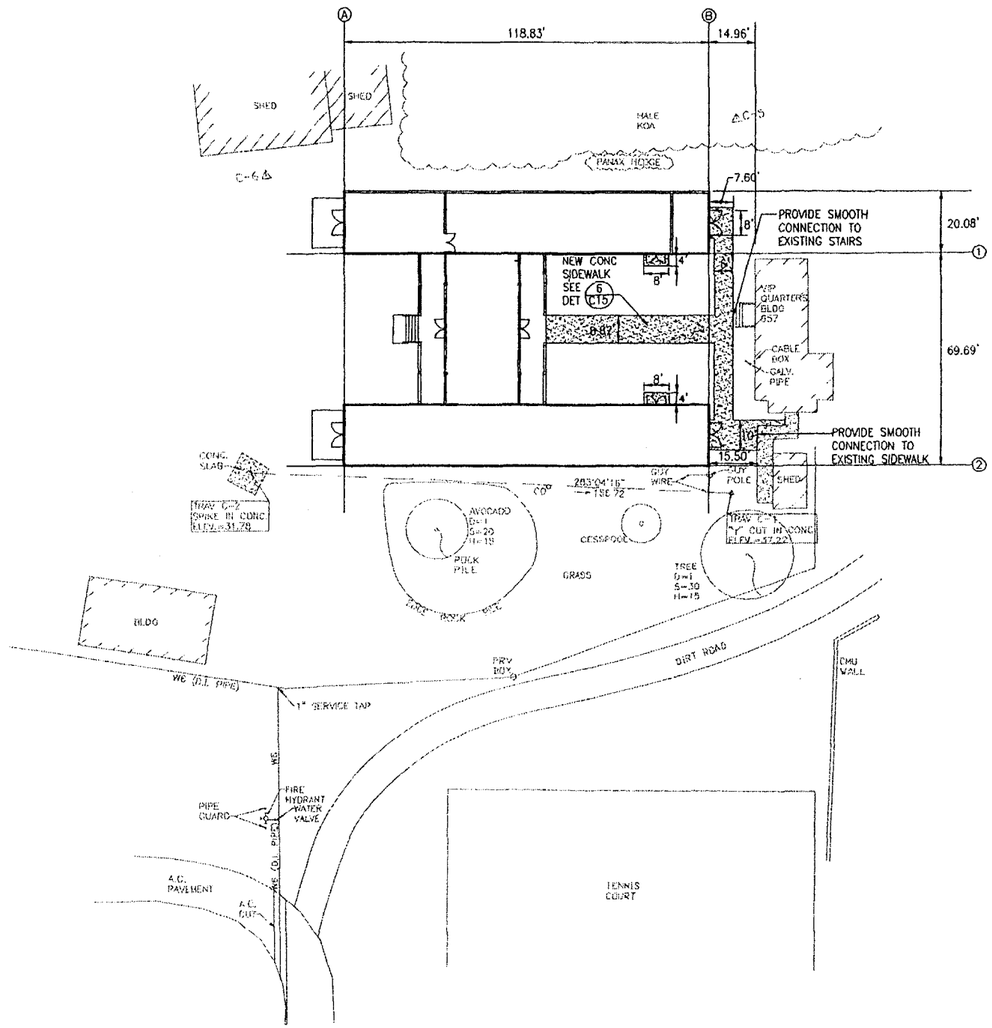

LEGEND

- 1 — 4" FSPK FOR CONT. SEE MECH. DWG.
- FIRE HYDRANT
- WATER METER
- GATE VALVE
- SEWER LATERAL
- APPROX. LOCATION OF CESSPOOL

True North
Scale: 1 in.=20 ft.

0' 20' 40' 80'
GRAPHIC SCALE

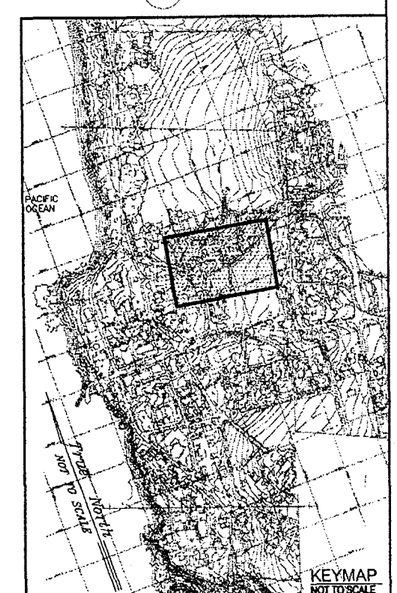

KEYMAP
NOT TO SCALE

DENNIS I. HIROTA
LICENSED PROFESSIONAL ENGINEER
No. 5377-C
HAWAII U.S.A.

THIS WORK WAS PREPARED BY ME OR UNDER MY SUPERVISION.

DATE

DESIGNED	SUB SHEET NO.	TITLE OF SHEET	DRAWING NO.
JH	C5	Curatorial Building SITE LAYOUT PLAN Kalaupapa National Historical Park	491 41,016
DRAWN: DH			PKG. NO. KALA 311-5 / SHEET 7 OF 71
TECH. REVIEW: ST			
DATE: 2/21/03			

8/72

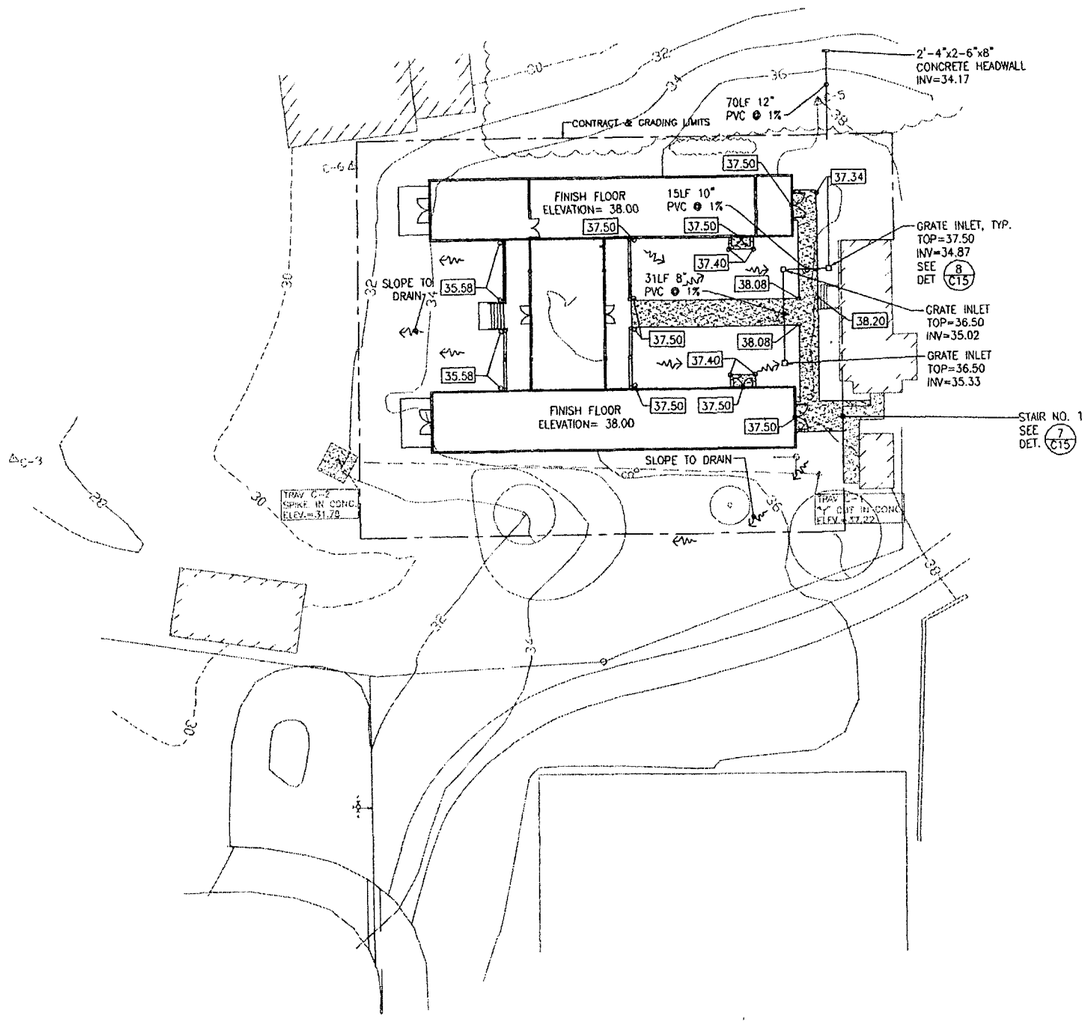

LEGEND

- 4" FSPK FOR CONT. SEE MECH. DWG.
- FIRE HYDRANT
- WATER METER
- GATE VALVE
- SEWER LATERAL
- APPROX. LOCATION OF CESSPOOL

True North
Scale: 1 in.=20 ft.

0' 20' 40' 80'
GRAPHIC SCALE

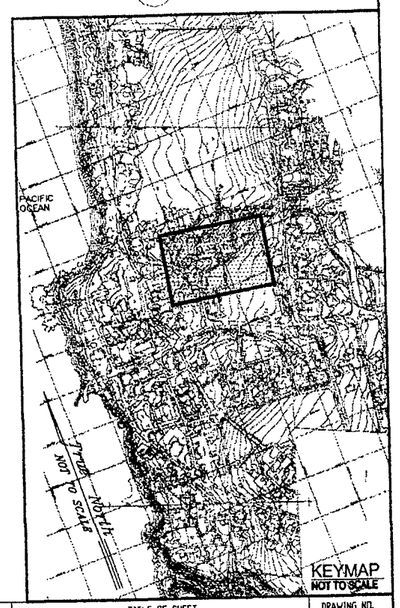

KEYMAP
NOT TO SCALE

DENNIS J. HIROTA
LICENSED PROFESSIONAL ENGINEER
No. 3377-C
HAWAII U.S.A.

THIS WORK WAS PREPARED BY ME OR UNDER MY SUPERVISION.

DATE

DESIGNED: JH	SUB SHEET NO.	TITLE OF SHEET	DRAWING NO. 491 / 41,016
DRAWN: DH	C6	Curatorial Building SITE GRADING PLAN	PKG. NO. KALA 211-5
TECH. REVIEW: ST		Kalaupapa National Historical Park	SHEET 8 OF 71
DATE: 2/21/03			

9/72

Topographic Survey Notes

1. Topographic survey conducted on August 22, 2001 by Sam O. Hirota, Inc. Field Book Number 1023.

2. Horizontal and vertical controls are field adjusted based on "Kalaupapa National Historic Park, Western Region, Settlement Area & Landing Strip, Topographic Map, U.S. Department of the Interior National Park Service, Denver Service Center, Prepared by Tani Photogrammetric Service, Broomfiel, Co. December 1983."

3. Water line information is based on "Waterline A - Plan and Profile, drawing numbers 491/41,012 sheet 7 of 57, C-3 and 29 of 57, C-25, Kalaupapa National Historical Park, dated 5/91.

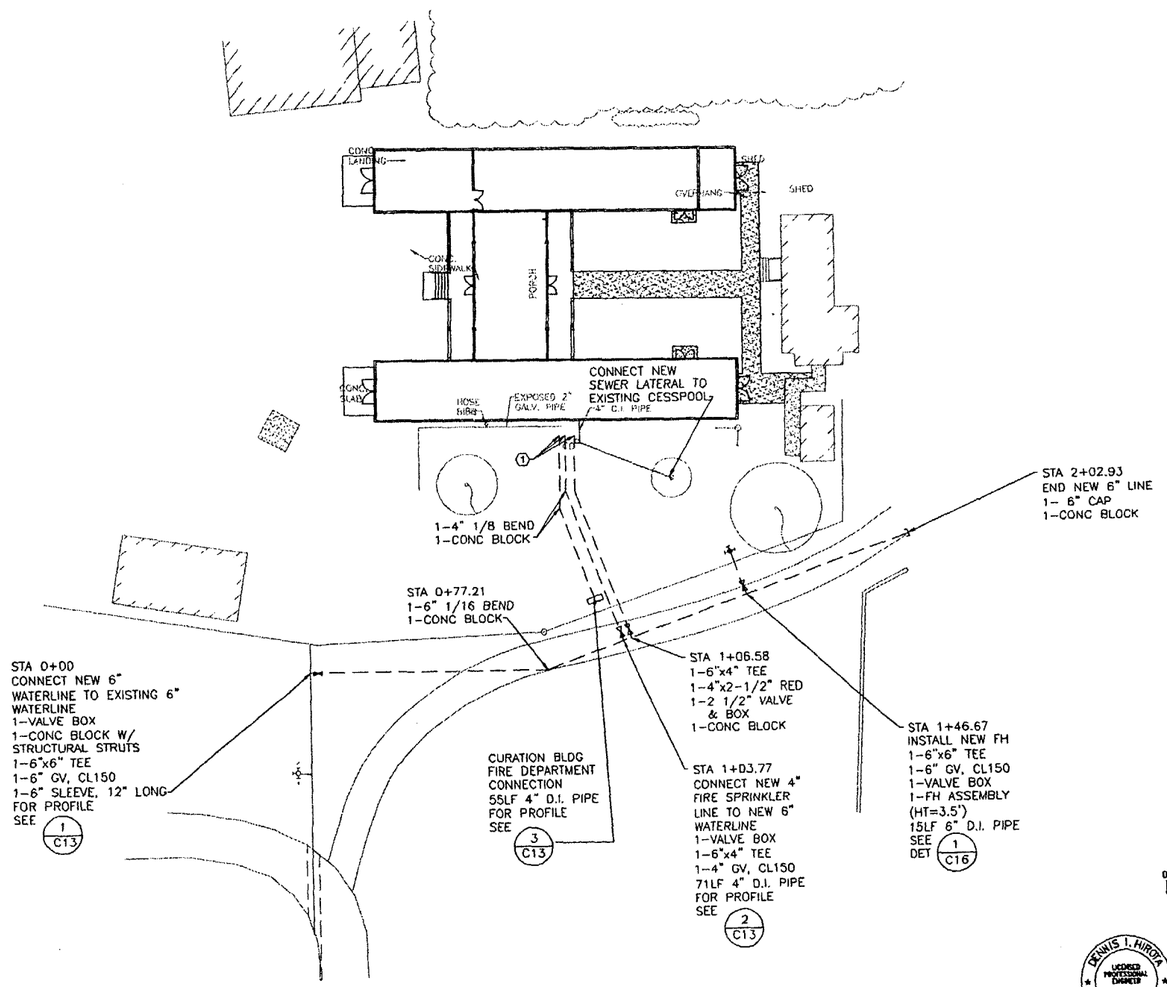

LEGEND

- (1) 4" FSPK FOR CONT. SEE MECH. DWG.
- FIRE HYDRANT
- WATER METER
- GATE VALVE
- SEWER LATERAL
- APPROX. LOCATION OF CESSPOOL

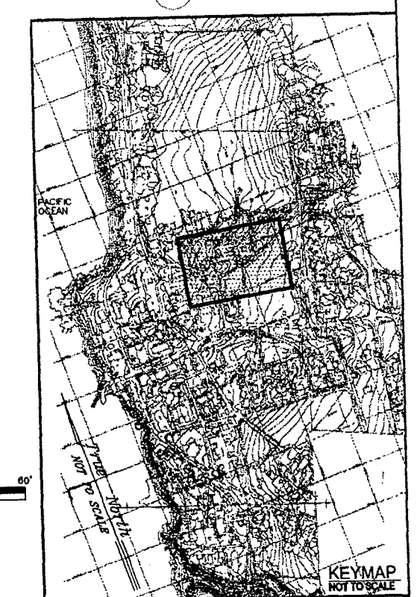

DENNIS I. HIROTA
LICENSED PROFESSIONAL ENGINEER
No. 3172-C
HAWAII U.S.A.

THIS WORK WAS PREPARED BY ME OR UNDER MY SUPERVISION.

DATE

DESIGNED: JH	SUB SHEET NO.	TITLE OF SHEET	DRAWING NO. 491 / 41,016
DRAWN: DH	C7	Curatorial Building SITE UTILITIES PLAN	PKG. NO. KALA 211-5
TECH. REVIEW: ST		Kalaupapa National Historical Park	SHEET 9 OF 71
DATE: 2/21/03			

10/72

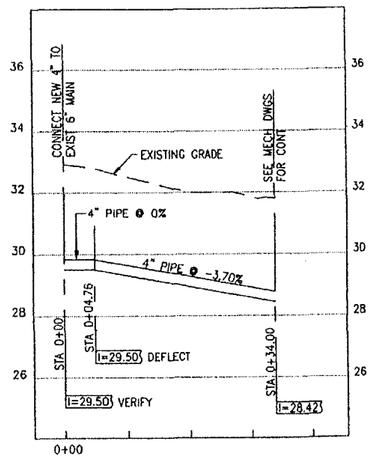

1 / C8 BAY VIEW UNIT #1 4" FIRE SPRINKLER PROFILE
SCALE: HOR 1"=10' VERT 1"=2'

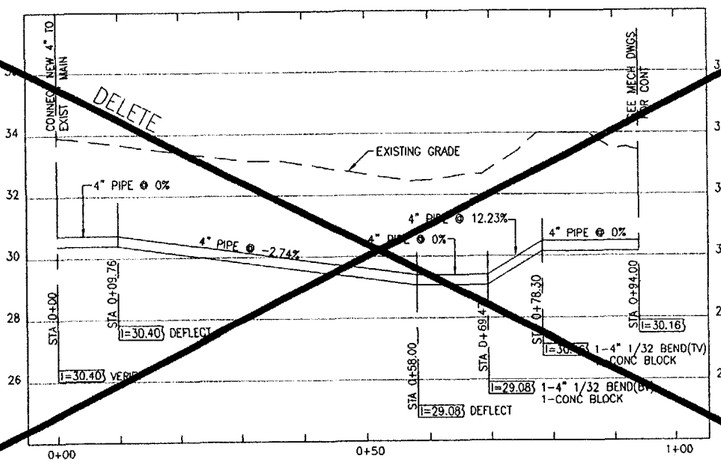

2 / C8 BAY VIEW UNIT #3 4" FIRE SPRINKLER PROFILE
SCALE: HOR 1"=10' VERT 1"=2'

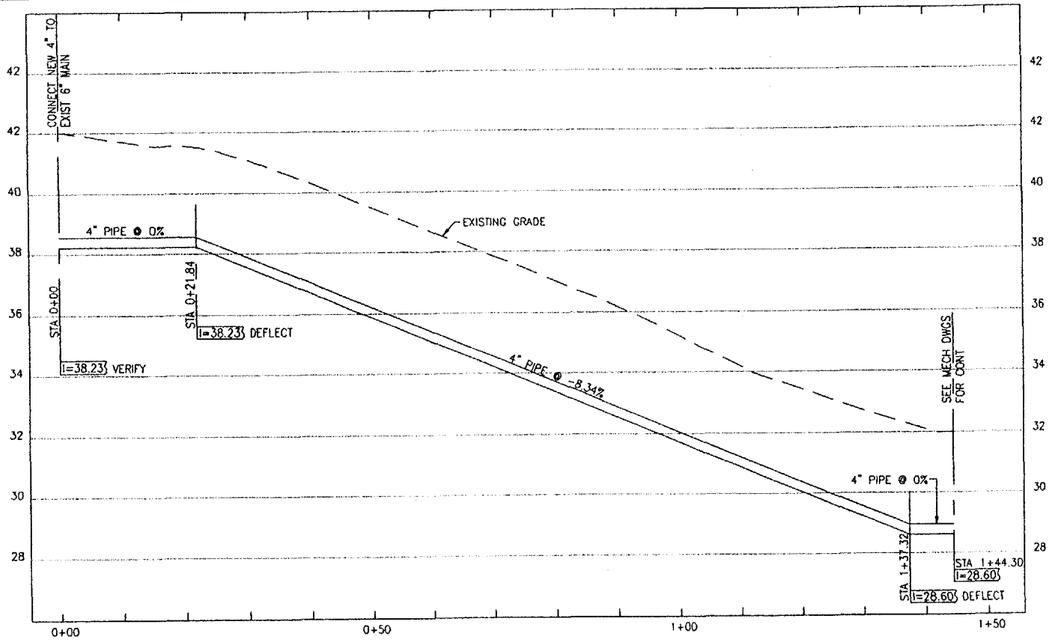

3 / C8 BAY VIEW UNITS #5 4" FIRE SPRINKLER PROFILE
SCALE: HOR 1"=10' VERT 1"=2'

DENNIS I. HIROTA
LICENSED PROFESSIONAL ENGINEER
No. 3377-C
HAWAII U.S.A.

THIS WORK WAS PREPARED BY ME OR UNDER MY SUPERVISION.

DATE

DESIGNED JH	SUB SHEET NO	TITLE OF SHEET	DRAWING NO. 491 41,016
DRAWN DH	C8	Bayview Units FIRE SPRINKLER PROFILES	PKG. NO. KALA 2H-5
TECH. REVIEW ST		Kalaupapa National Historical Park	SHEET 10 OF 71
DATE 2/21/03			

11/72

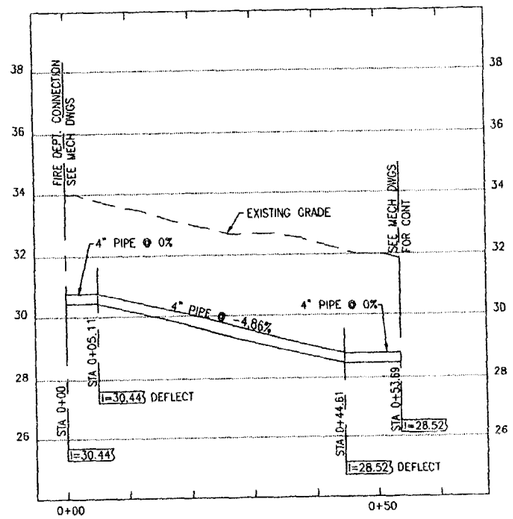

1 C9 BAY VIEW UNIT #1 4" FIRE DEPARTMENT CONNECTION PROFILE
SCALE: HOR 1"=10' VERT 1"=2'

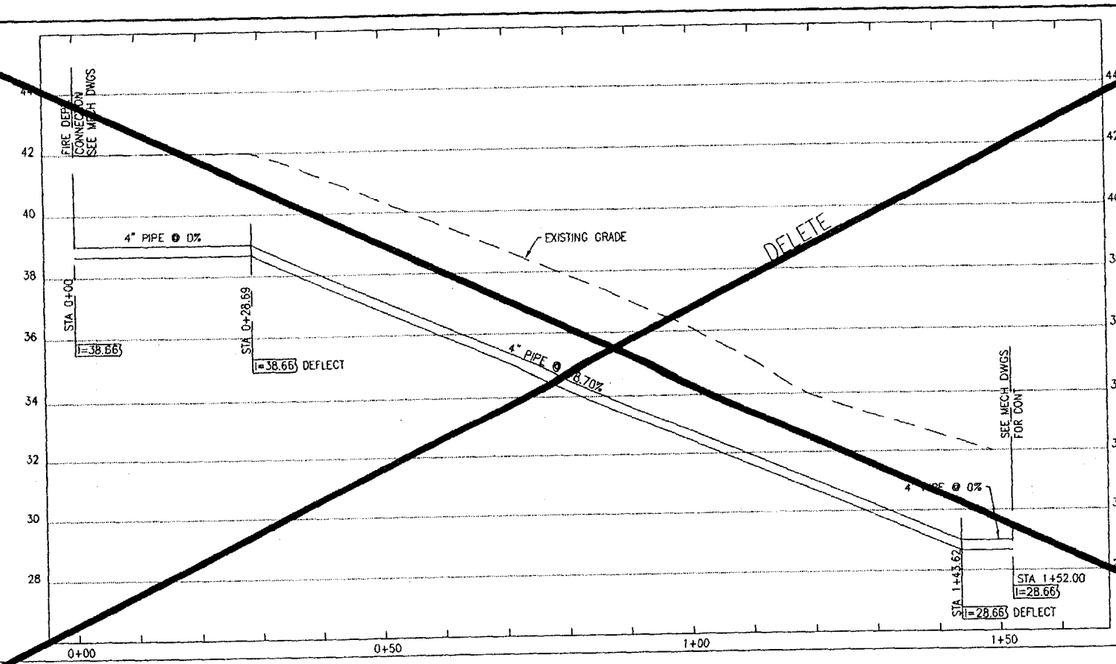

2 C9 BAY VIEW UNIT #2 4" FIRE DEPARTMENT CONNECTION PROFILE
SCALE: HOR 1"=10' VERT 1"=2'

DELETE

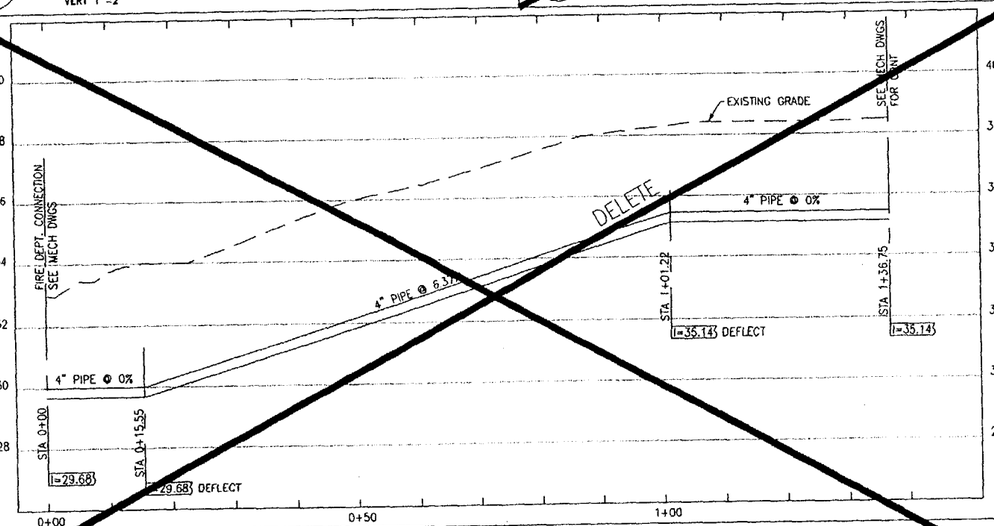

1 C9 BAY VIEW UNITS #3 4" FIRE DEPARTMENT CONNECTION PROFILE
SCALE: HOR 1"=10' VERT 1"=2'

DELETE

DENNIS I. HIROTA
LICENSED PROFESSIONAL ENGINEER
No. 3377-C
HAWAII U.S.A.

THIS WORK WAS PREPARED BY ME OR UNDER MY SUPERVISION.

DATE

DESIGNED JH	SUB SHEET NO.	TITLE OF SHEET	DRAWING NO. 491 41,016
DRAWN DH	C9	Bayview Units FIRE DEPARTMENT CONNECTION PROFILES	PKG. NO. Kaua 216-B
TECH. REVIEW ST		Kalaupapa National Historical Park	SHEET 11 OF 71
DATE: 2/21/03			

12/72

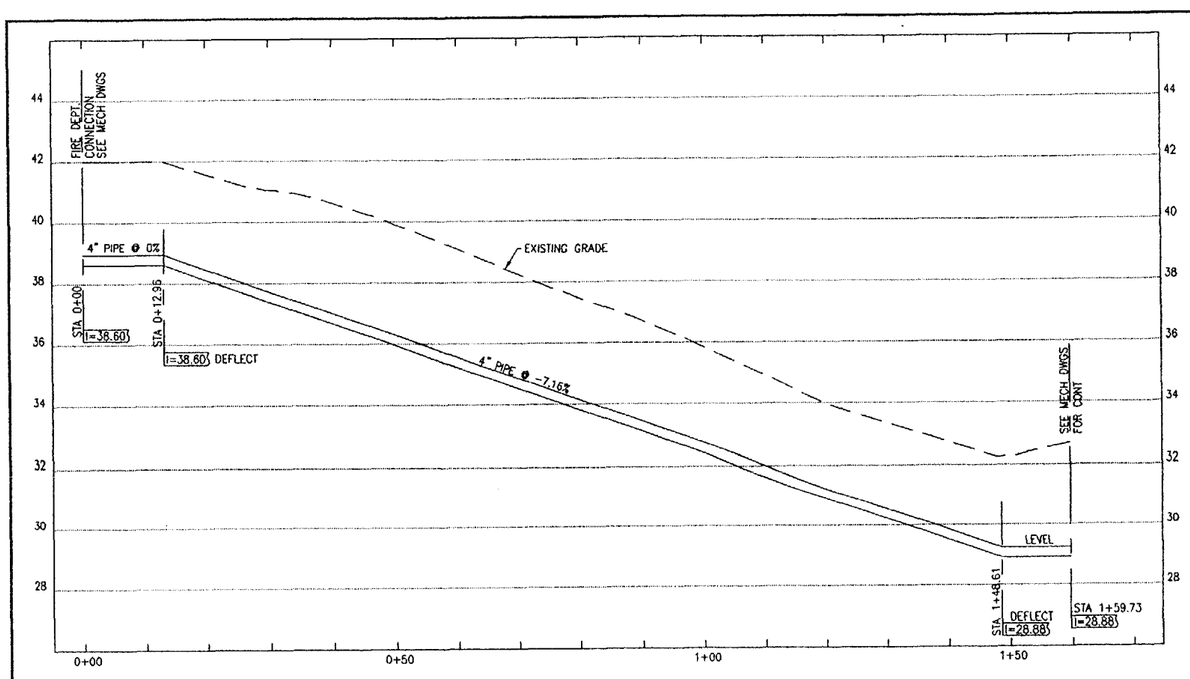

1 / C10 BAY VIEW UNIT #5 (OPTION 4) 4" FIRE DEPARTMENT CONNECTION PROFILE

SCALE: HOR 1"=10'
VERT 1"=2'

DENNIS I. HIROTA
LICENSED PROFESSIONAL ENGINEER
No. 5377-C
HAWAII U.S.A.

THIS WORK WAS PREPARED BY ME OR UNDER MY SUPERVISION.

DATE

DESIGNED: JH	SUB SHEET NO.	TITLE OF SHEET	DRAWING NO. 491 41,016
DRAWN: DH	C10	Bayview Units FIRE DEPARTMENT CONNECTION PROFILES	PKG. NO. KALA 311-5
TECH. REVIEW: ST		Kalaupapa National Historical Park	SHEET 12 OF 71
DATE: 2/21/03			

13/72

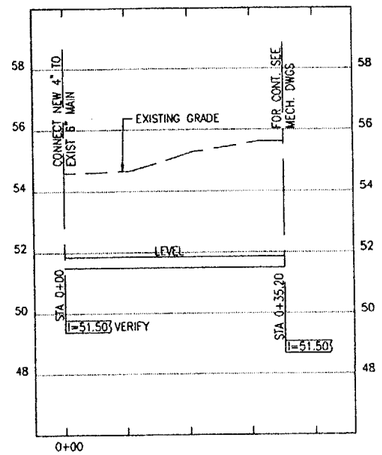

1 C11 MCVEIGH UNIT #11 (OPTION 6) 4" FIRE SPRINKLER PROFILE
SCALE: HOR 1"=10'
VERT 1"=2'

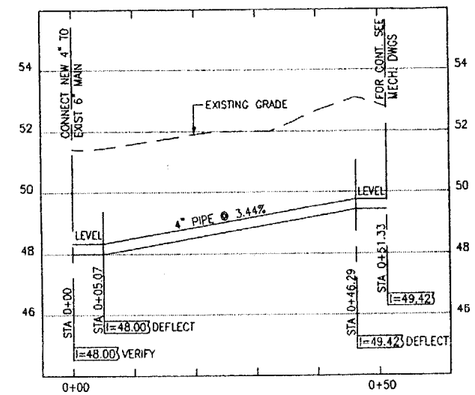

2 C11 MCVEIGH UNIT #12 (OPTION 7) 4" FIRE SPRINKLER PROFILE
SCALE: HOR 1"=10'
VERT 1"=2'

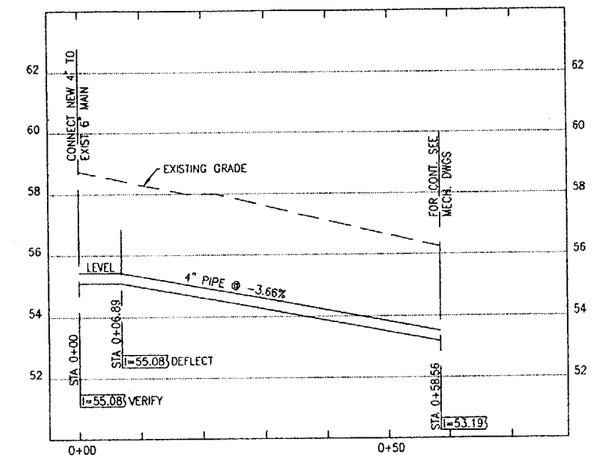

3 C11 MCVEIGH UNIT #23 (OPTION 8) 4" FIRE SPRINKLER PROFILE
SCALE: HOR 1"=10'
VERT 1"=2'

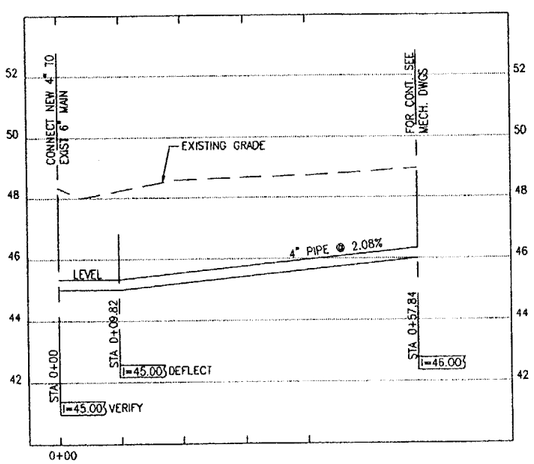

4 C11 MCVEIGH UNIT #28 (OPTION 9) 4" FIRE SPRINKLER PROFILE
SCALE: HOR 1"=10'
VERT 1"=2'

DENNIS I. HIROTA
LICENSED PROFESSIONAL ENGINEER
No. 3377-C
HAWAII U.S.A.

THIS WORK WAS PREPARED BY ME OR UNDER MY SUPERVISION.

DATE

DESIGNED JH	SUB SHEET NO.	TITLE OF SHEET	DRAWING NO. 491 / 41,016
DRAWN DH	C11	McVEIGH Units FIRE SPRINKLER PROFILES	PKG. NO. KALA 211-5 / SHEET 13 OF 71
TECH. REVIEW ST		Kalaupapa National Historical Park	
DATE: 2/21/03			

14/72

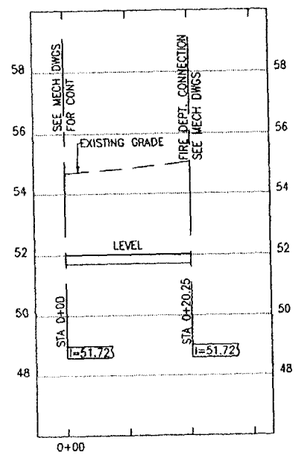

1 C12 MCVEIGH UNIT #11 (OPTION 6) 4" FIRE DEPT CONNECTION PROFILE
SCALE: HOR 1"=10'

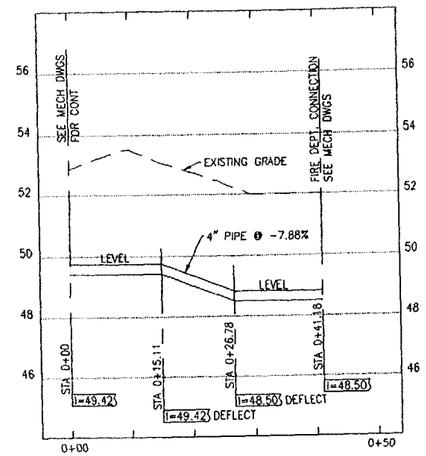

2 C12 MCVEIGH UNIT #12 (OPTION 7) 4" FIRE DEPT CONNECTION PROFILE
SCALE: HOR 1"=10'

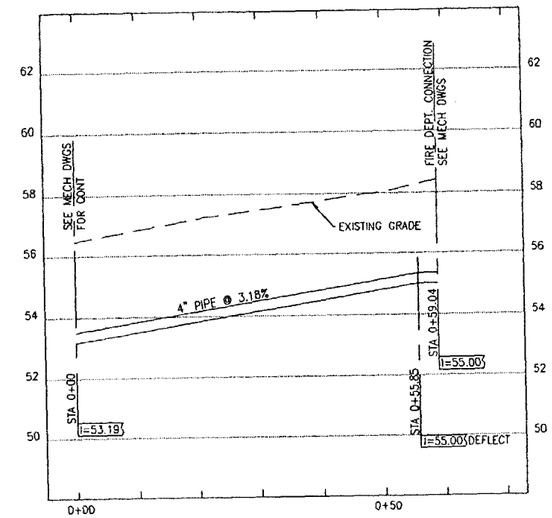

3 C12 MCVEIGH UNIT #23 (OPTION 8) 4" FIRE DEPT CONNECTION PROFILE
SCALE: HOR 1"=10'

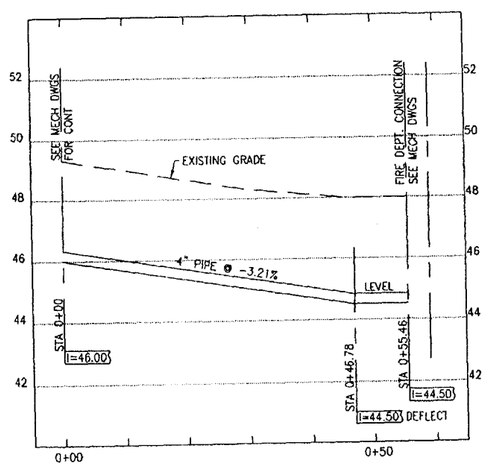

4 C12 MCVEIGH UNIT #28 (OPTION 9) 4" FIRE DEPT CONNECTION PROFILE
SCALE: HOR 1"=10'

DENNIS I. HIROTA
LICENSED PROFESSIONAL ENGINEER
No. 3377-C
HAWAII U.S.A.

THIS WORK WAS PREPARED BY ME OR UNDER MY SUPERVISION.

DATE

DESIGNED JH	SUB SHEET NO.	TITLE OF SHEET	DRAWING NO. 491 / 41,016
DRAWN DH	C12	McVEIGH Units FIRE DEPARTMENT CONNECTION PROFILES	PKG. NO. KALA 2t-S
TECH. REVIEW ST		Kalaupapa National Historical Park	SHEET 14 OF 71
DATE 2/21/03			

15/72

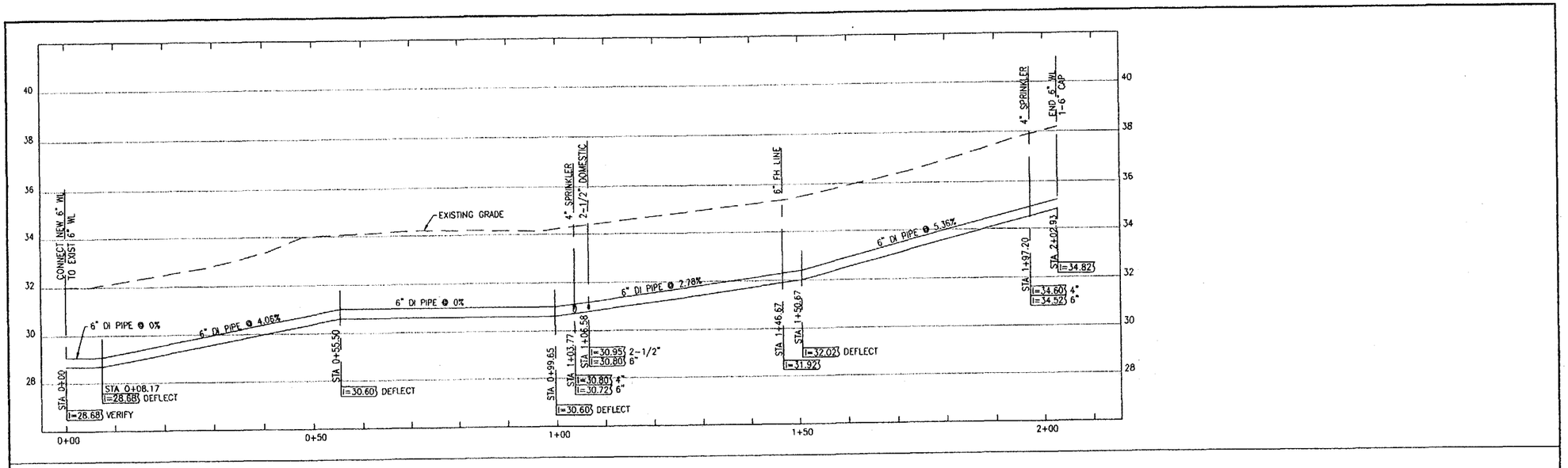

1 / C13 6" WATER LINE
SCALE: HOR 1"=10' VERT 1"=2'

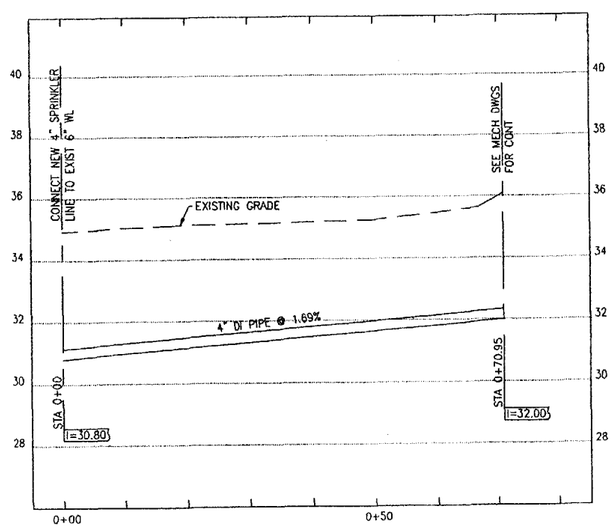

2 / C13 CURATORIAL BLDG 4" SPRINKLER PROFILE
SCALE: HOR 1"=10' VERT 1"=2'

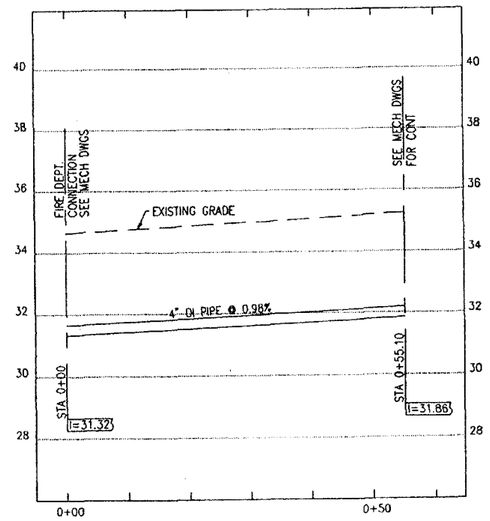

3 / C13 CURATORIAL BLDG 4" FIRE DEPT. CONNECTION PROFILE
SCALE: HOR 1"=10' VERT 1"=2'

DENNIS I. HIROTA
LICENSED PROFESSIONAL ENGINEER
No. 5377-C
HAWAII U.S.A.

THIS WORK WAS PREPARED BY ME OR UNDER MY SUPERVISION.

DATE

DESIGNED: JH	SUB SHEET NO.	TITLE OF SHEET	DRAWING NO. 491 / 41,016
DRAWN: DH	C13	Curatorial Building WATER LINE AND FIRE LINE PROFILES	PKG. NO. KALA 241-5
TECH. REVIEW: ST		Kalaupapa National Historical Park	SHEET 15 OF 71
DATE: 2/21/03			

16/72

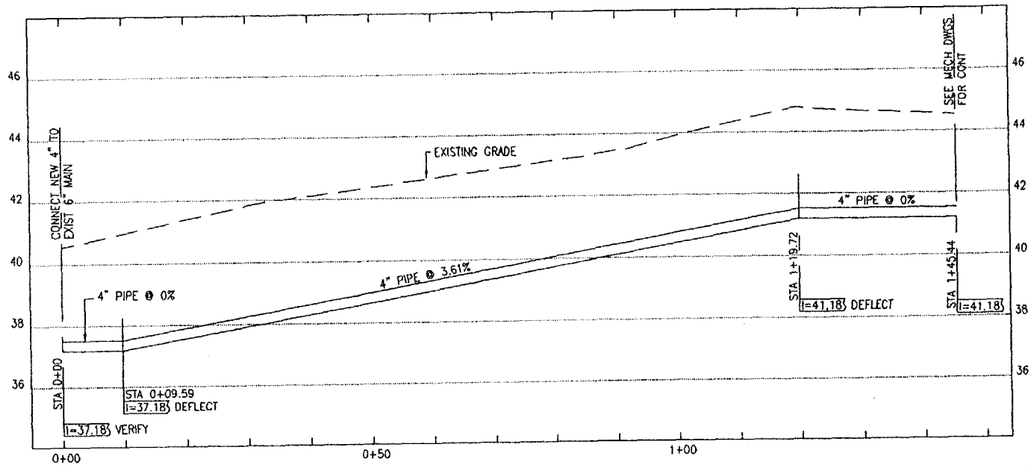

1 / C14 BLDG #281 (OPTION11) 4" FIRE SPRINKLER PROFILE (BID ALT #2)
SCALE: HOR 1"=10'

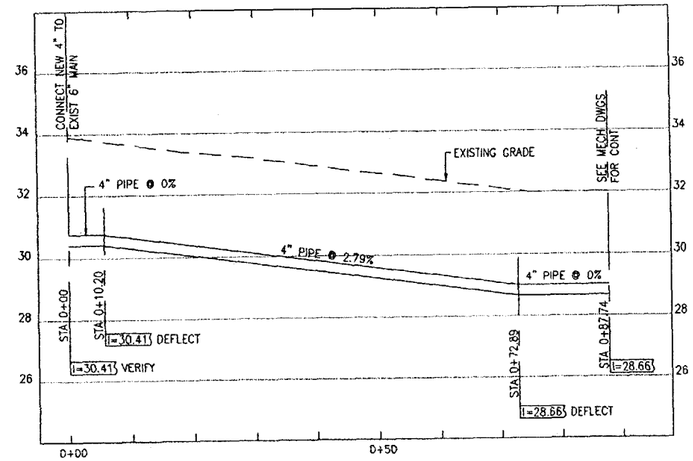

2 / C14 BLDG #286 (OPTION 10) 4" FIRE SPRINKLER PROFILE
SCALE: HOR 1"=10'

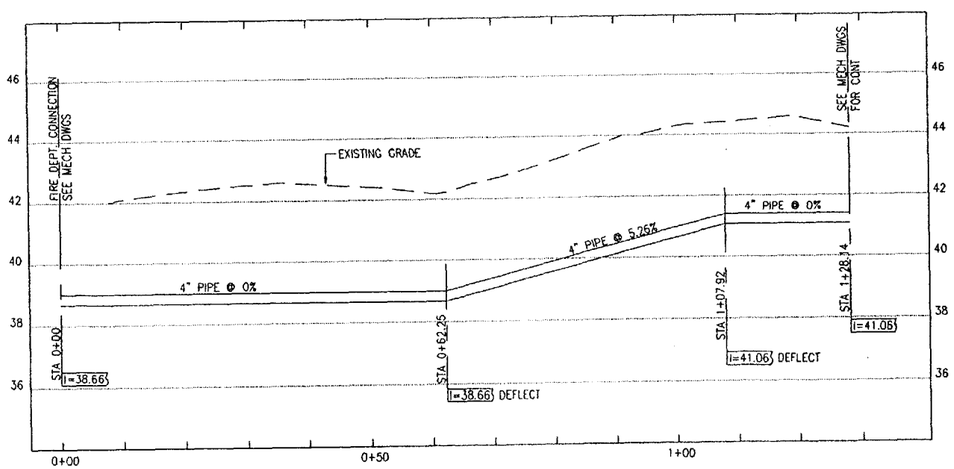

3 / C14 BLDG #281 (OPTION11) 4" FIRE DEPT. CONNECTION PROFILE (BID ALT #2)
SCALE: HOR 1"=10'

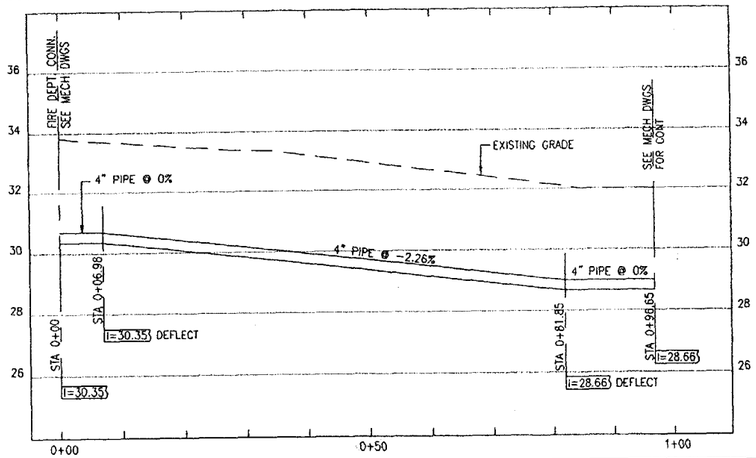

4 / C14 BLDG #286 (OPTION 10) 4" FIRE DEPT. CONNECTION PROFILE
SCALE: HOR 1"=10'

LEWIS I. HIROTA
LICENSED PROFESSIONAL ENGINEER
No. 3577-C
HAWAII U.S.A.

THIS WORK WAS PREPARED BY ME OR UNDER MY SUPERVISION.

DATE

DESIGNED: JH	SUB SHEET NO.	TITLE OF SHEET	DRAWING NO. 491 / 41,016
DRAWN: DH	C14	Bldg 281 & 286 FIRE SPRINKLER & FIRE DEPT. CONNECTION PROFILES Kalaupapa National Historical Park	PKG. NO. KALA 21-5
TECH. REVIEW: ST			SHEET 16 OF 71
DATE: 2/21/03			

17/72

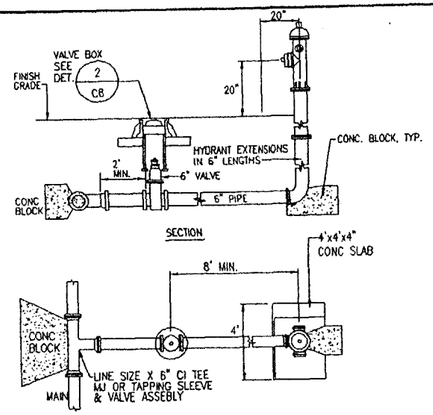

1 / C15 FIRE HYDRANT
NOT TO SCALE

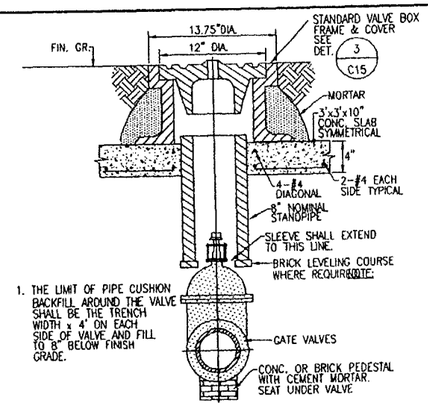

NOTE:
1. THE LIMIT OF PIPE CUSHION BACKFILL AROUND THE VALVE SHALL BE THE TRENCH WIDTH x 4' ON EACH SIDE OF VALVE AND FILL TO 8" BELOW FINISH GRADE.

2 / C15 VALVE BOX INSTALLATION FOR GATE VALVE
NOT TO SCALE

NOTE:
ALL CASTINGS SHALL BE MADE ACCURATELY TO THE DIMENSIONS SHOWN. SEAT AND COVER SHALL BE MACHINED, NOT GROUND TO SECURE FLAT AND TRUE SURFACES. THE COVER SHALL NOT RATTLE IN ANY POSITION.

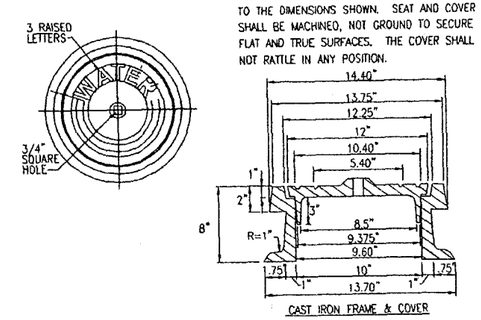

3 / C15 1' VALVE BOX FRAME & COVER
NOT TO SCALE

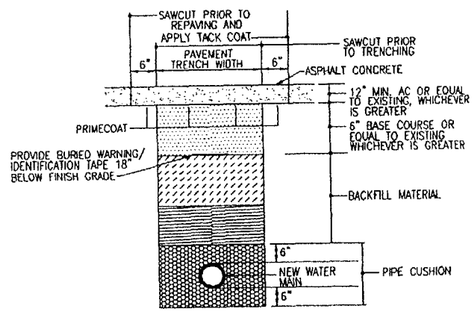

4 / C15 WATER MAIN TRENCH
NOT TO SCALE

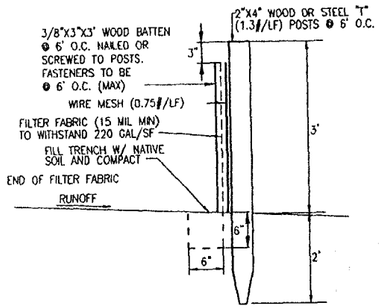

5 / C15 TEMPORARY SILT FENCE
NOT TO SCALE

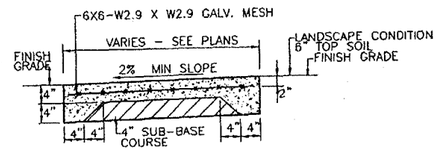

NOTES:
1. SEE ARCHITECTURAL DRAWINGS FOR PAVEMENT FINISH.
2. PROVIDE 1/2" EXPANSION JOINTS BETWEEN ALL FIXED OBJECTS AND WALK.
3. SCORE LINES SHALL BE SPACED EQUALLY BETWEEN EXPANSION JOINTS TO NEAREST 4'
4. PROVIDE CONTRACTION JOINTS EVERY 6' AND EXTEND AT LEAST 1/3 OF DEPTH OF SLAB.
5. PROVIDE EXPANSION JOINTS (1/2") AT INTERSECTIONS OF DIFFERENT WALKS AND EVERY 30' ON STRAIGHT RUNS.
6. CONTRACTOR SHALL SATURATE THE SUBGRADE AND SUB-BASE COURSE WITH A LOW PRESSURE SPRINKLER HOSE A MINIMUM OF 24 HOURS BEFORE POURING THE CONCRETE.

6 / C15 CONCRETE SIDEWALK
NOT TO SCALE

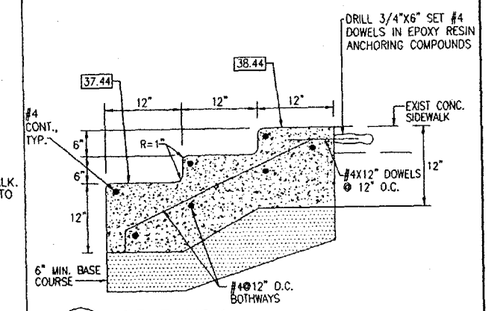

7 / C15 STAIR NO.1
NOT TO SCALE

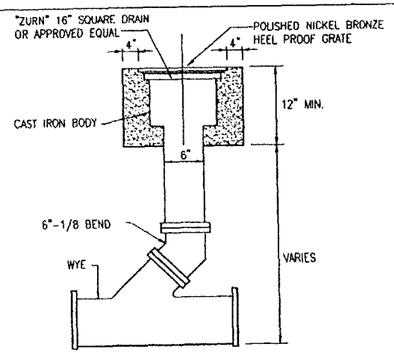

8 / C15 16" DRAIN INLET
NOT TO SCALE

DENNIS I. HIROTA
LICENSED PROFESSIONAL ENGINEER
No. 5377-C
HAWAII U.S.A.

THIS WORK WAS PREPARED BY ME OR UNDER MY SUPERVISION.

DATE

DESIGNED JH	SUB SHEET NO.	TITLE OF SHEET	DRAWING NO. 49L 41,016
DRAWN DH	C15	DETAILS	PKG. NO. KAI-A 211-5
TECH. REVIEW ST		Kalaupapa National Historical Park	SHEET 17 OF 71
DATE 2/21/03			

18/72

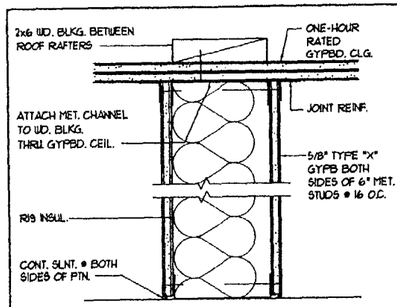

TYPE "A" PARTITION
3" = 1'-0"
D-1HR-WALL-INT

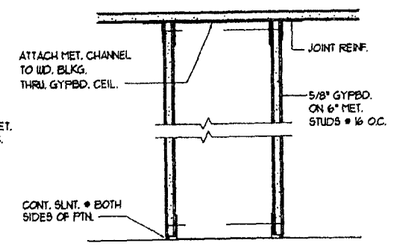

TYPE "B" PARTITION
3" = 1'-0"
D-WALL-INT

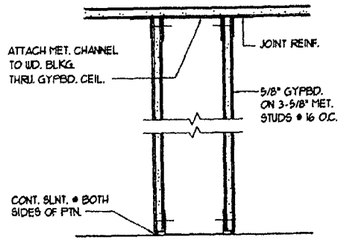

TYPE "C" PARTITION
3" = 1'-0"
D-WALL-INT

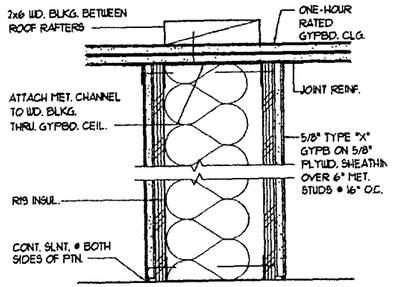

TYPE "D" PARTITION
3" = 1'-0"
D-1HR-WALL-INT

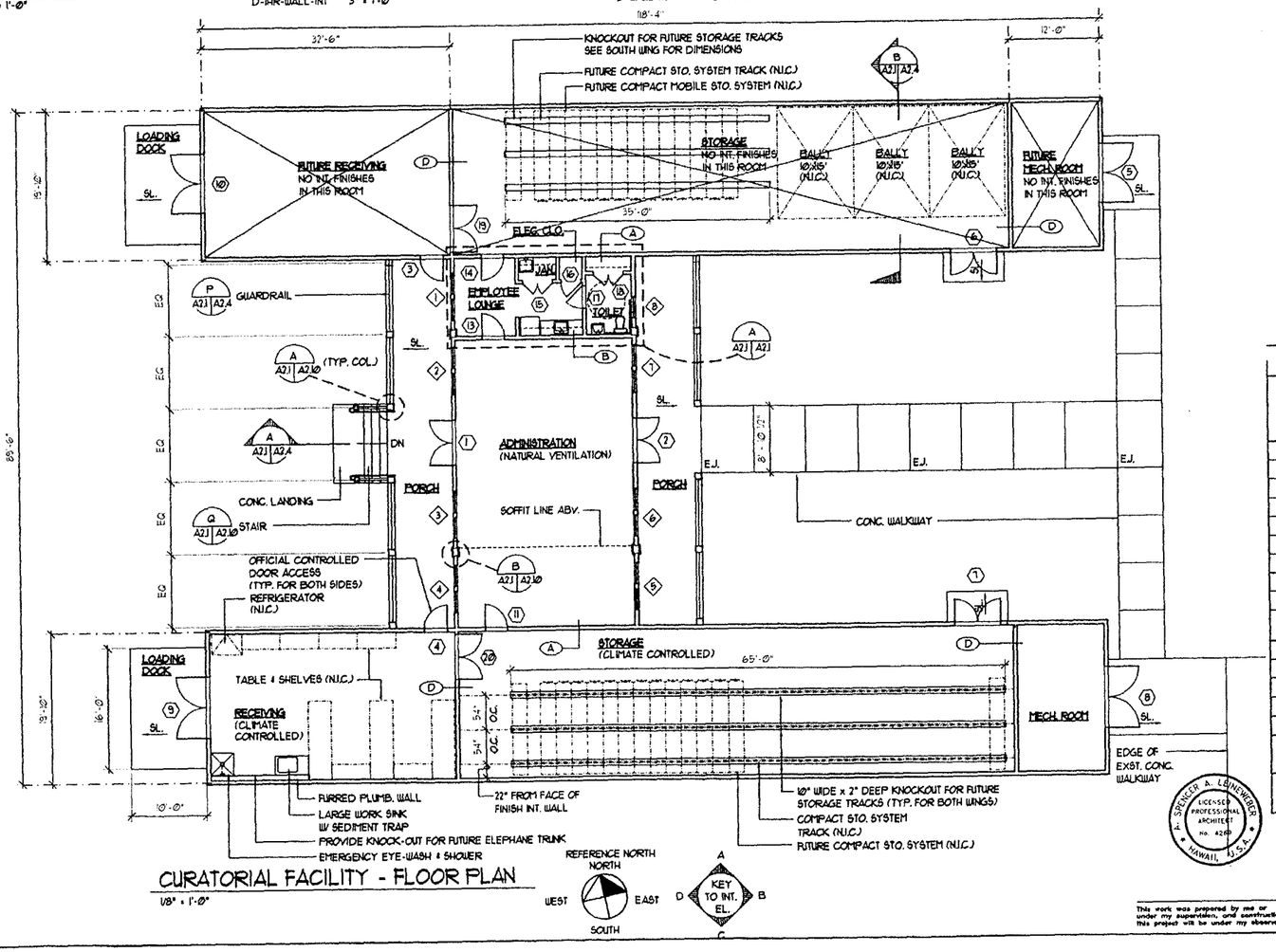

CURATORIAL FACILITY - FLOOR PLAN
1/8" = 1'-0"

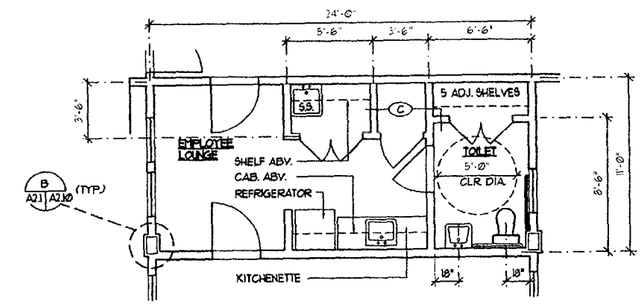

ENLARGED LOUNGE & TOILET PLAN
1/4" = 1'-0"

ROOM FINISH SCHEDULE

ROOM NAME	FLOOR MATL	FLOOR COLOR	BASE MATL	BASE COLOR	WAINSCOT MATL	WAINSCOT COLOR	WALL MATL	WALL COLOR	CEILING MATL	CEILING COLOR	REMARKS
ADMINISTRATION	C		A		B		A		B		
STORAGE	A		B		-		A		A		
RECEIVING	A		B		-		A		A		
EMPLOYEE LOUNGE	C		B		-		A		A		
JAN.	C		B		-		B		A		
ELEC. CLOSET	C		B		-		A		A		
TOILET	B		C		A		B		A		
MECH.	A		B		-		A		A		
PORCH	D		A		-		-		B		

MATERIAL INDEX

	FLOOR		BASE		WAINSCOT		WALL		CEILING
A	CONCRETE SLAB	A	1x6 WD. BASE	A	CER. TILE	A	GYPBD.	A	GYPBD.
B	CER. TILE	B	RESIL. BASE	B	BOARD AND BATTEN	B	W.R. GYPBD.	B	T&G
C	LINOLEUM SQUARES	C	CERAMIC TILE						
D	1x6 T&G WOOD DECKING								

GENERAL NOTES

1. CONCRETE SLAB LEFT EXPOSED SHALL BE SEALED WITH CLR. WATERPROOF SEALANT

A. SPENCER A. LEINWEBER
LICENSED PROFESSIONAL ARCHITECT
No. 4260
HAWAII, U.S.A.

This work was prepared by me or under my supervision, and construction of this project will be under my observation.

DESIGNED: SL	SUB SHEET NO.	TITLE OF SHEET	DRAWING NO. 491 / 41,016
DRAWN: WL	A2.1	CURATORIAL FACILITY FLOOR PLAN, ROOM FIN. SCHED., MATERIAL INDEX & DETAILS Kalaupapa National Historical Park	PKG. NO. KALA. ZK-3
TECH. REVIEW:			SHEET 18 OF 71
DATE: 2/21/03			

KALA211-CF-PL.DWG 07/20/02 01:36

19/72

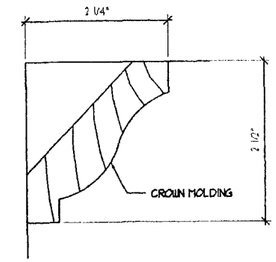

E A22 A22 CEILING MOLDING DET.
FULL SIZE

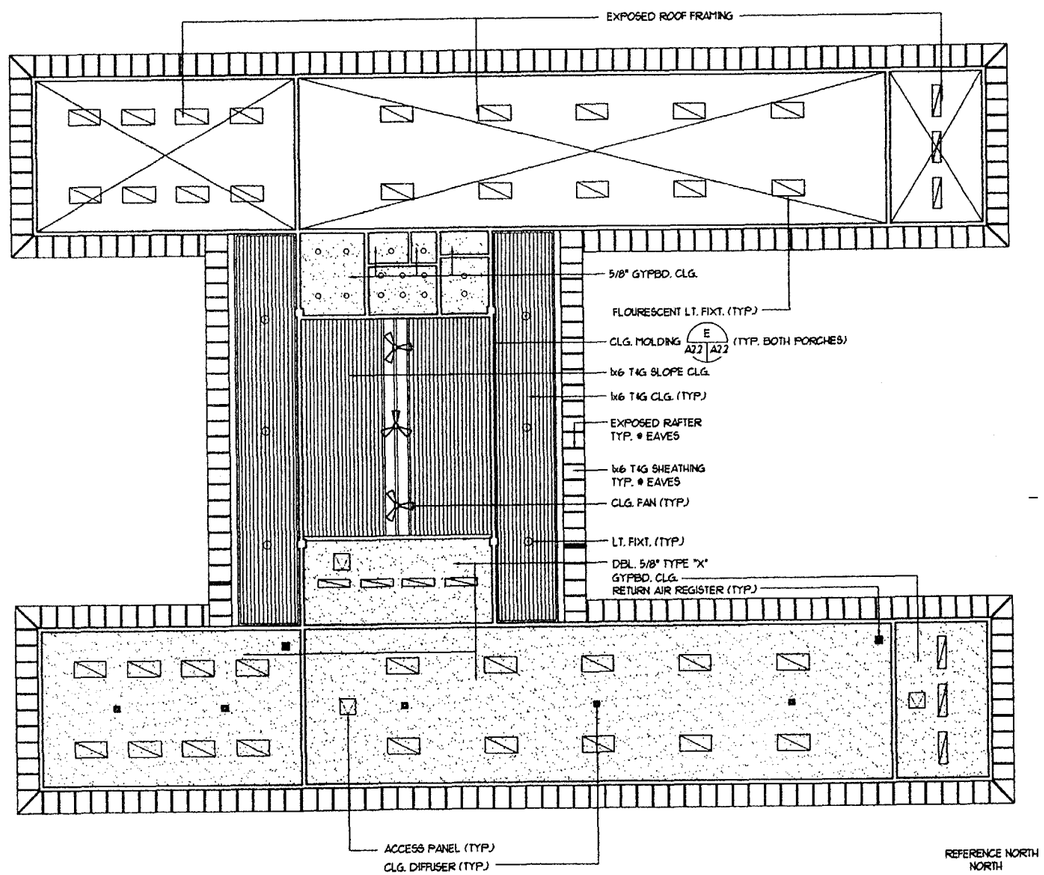

REFLECTED CEILING PLAN
1/8" = 1'-0"

REFERENCE NORTH
NORTH
WEST
EAST
SOUTH

A. SPENCER A. LEINEWEBER
LICENSED PROFESSIONAL ARCHITECT
No. 4269
HAWAII, U.S.A.

This work was prepared by me or under my supervision, and construction of this project will be under my observation.

DESIGNED: SL	SUB SHEET NO.	TITLE OF SHEET	DRAWING NO. 491 41,016
DRAWN: UL		CURATORIAL FACILITY	PKG. NO. KALA 211-5
TECH. REVIEW:	A22	REFLECTED CEILING PLAN & DETAIL	SHEET 19 OF 71
DATE: 2/21/03		Kalaupapa National Historical Park	

20/72

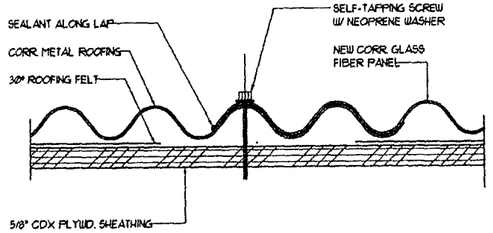

A (A23|A23) SIDE LAP DETAIL
HALF SCALE
07610-1

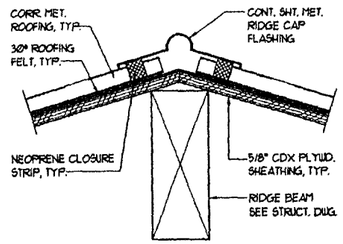

B (A23|A23) RIDGE DET.
A24
3" = 1'-0"
D-RF-RIDGE

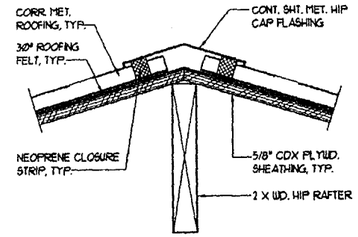

C (A23|A23) HIP DET.
3" = 1'-0"
D-HIP-RIDGE

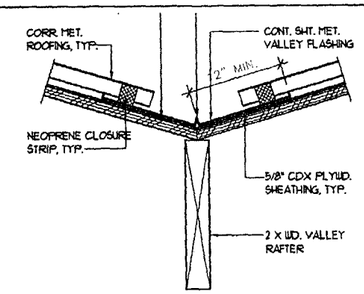

D (A23|A23) VALLEY DET.
3" = 1'-0"
D-HIP-RIDGE

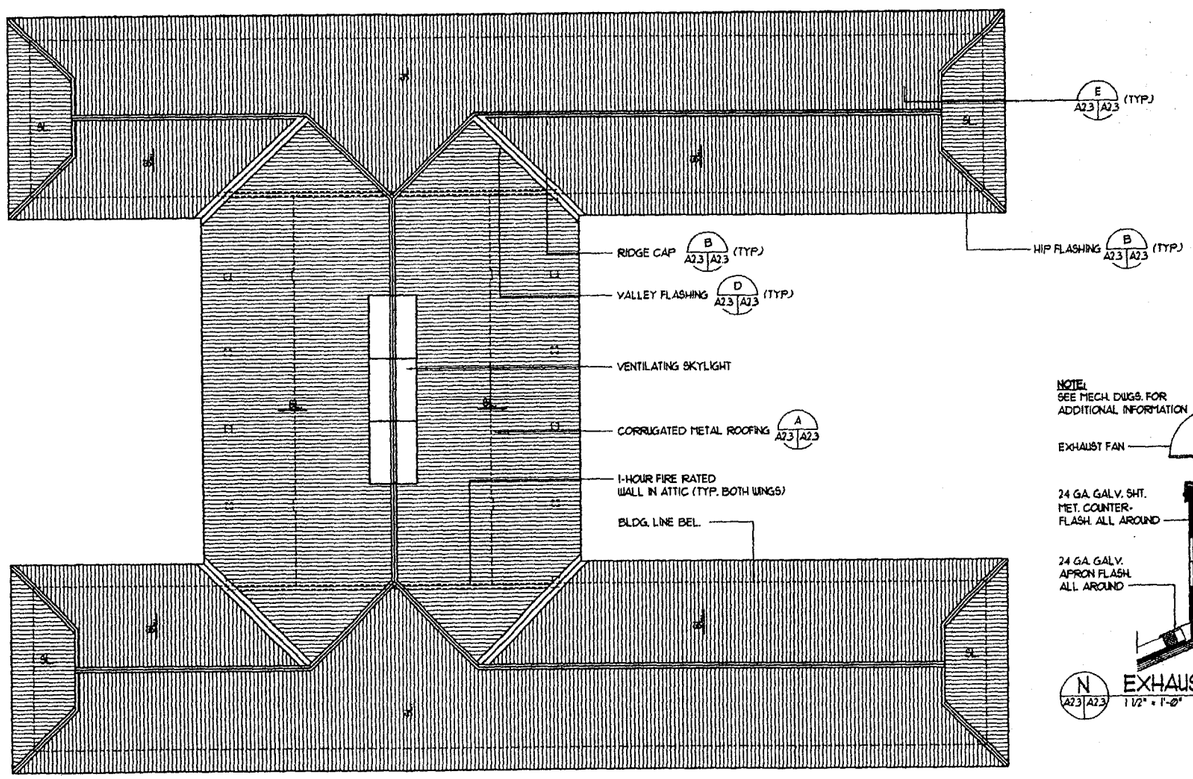

ROOF PLAN
1/8" = 1'-0"

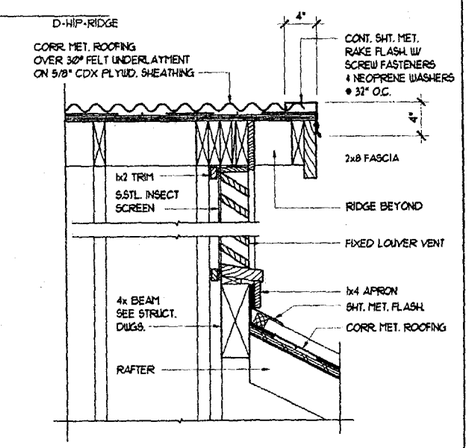

E (A23|A23) RAKE DETAIL
A25
1-1/2" = 1'-0"
D-RFG-RAKE

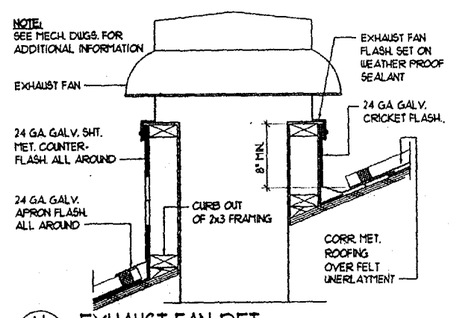

N (A23|A23) EXHAUST FAN DET.
1 1/2" = 1'-0"
07510-15

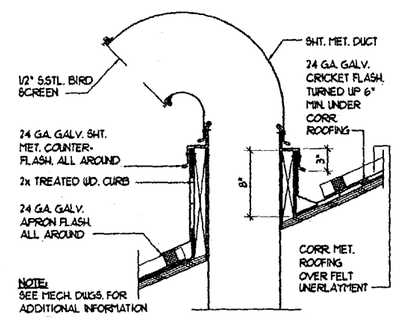

O (A23|A23) GOOSENECK DUCT DET.
1 1/2" = 1'-0"
D-RFG-GOOSENECK

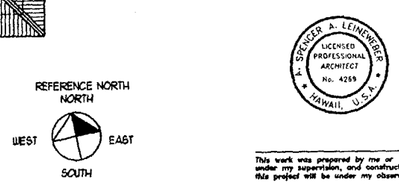

This work was prepared by me or under my supervision, and construction of this project will be under my observation.

DESIGNED: SL	SUB SHEET NO.	TITLE OF SHEET	DRAWING NO. 491 / 41,016
DRAWN: WL	A23	CURATORIAL FACILITY ROOF PLAN & DETAILS Kalaupapa National Historical Park	PKG. NO. KALA 211-5
TECH. REVIEW:			SHEET 20 OF 71
DATE: 2/21/03			

KAL-A211-CF-PL.DWG 07/20/02 01:36

21/72

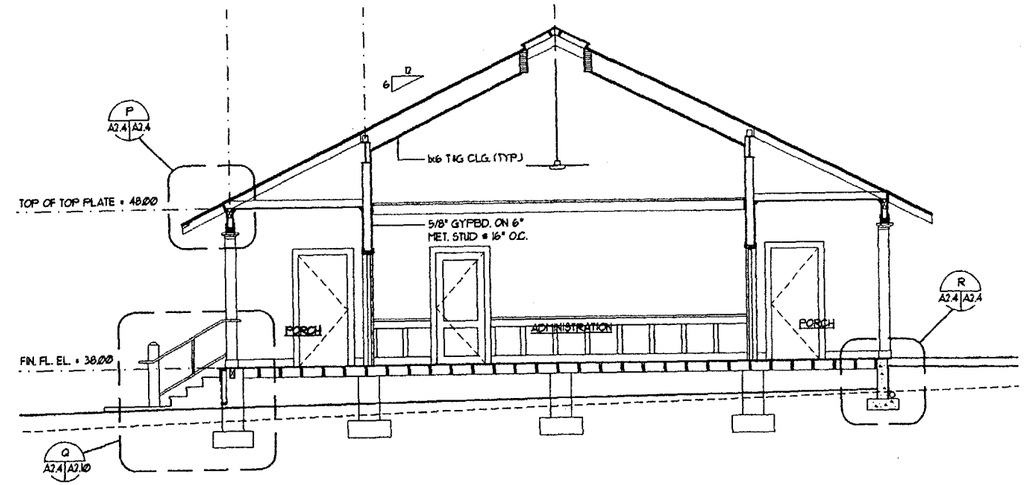

A A2.1 A2.4 BLDG. CROSS SECTION
1/4" = 1'-0"

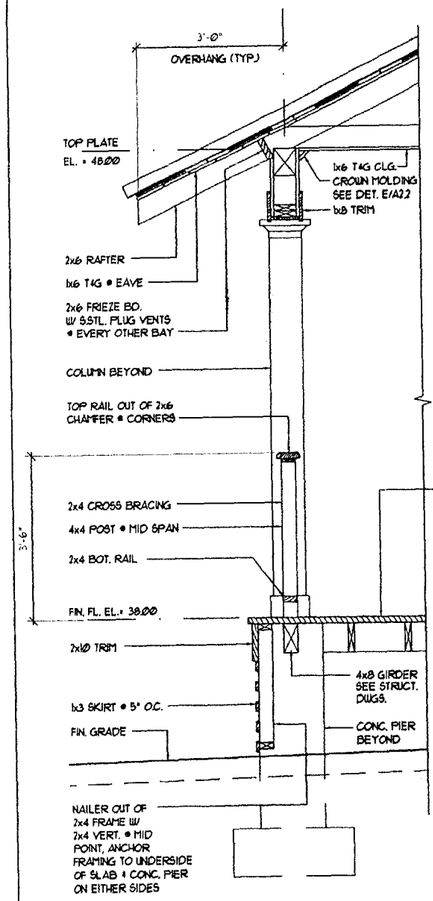

P A2.4 A2.4 TYP. WALL SECTION
3/4" = 1'-0"

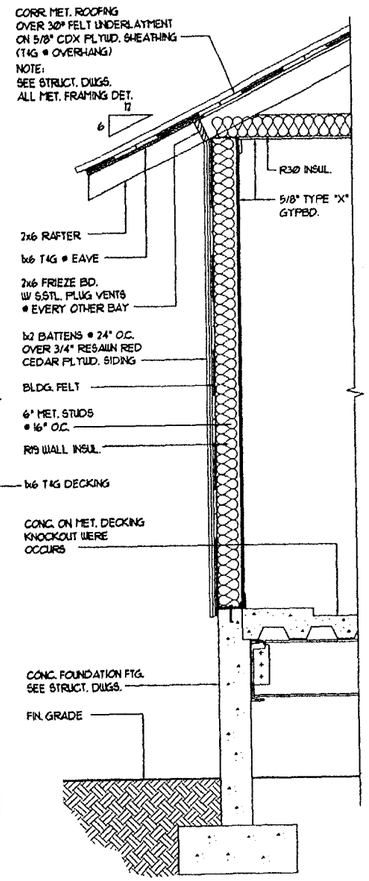

Q A2.4 A2.4 TYP. WALL SECTION
3/4" = 1'-0"

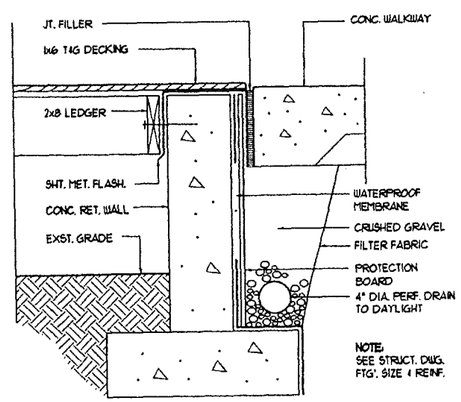

R A2.4 A2.4 RETAIN. WALL WATERPROOFING DET.
1-1/2" = 1'-0"
D-RET-WALL-WP

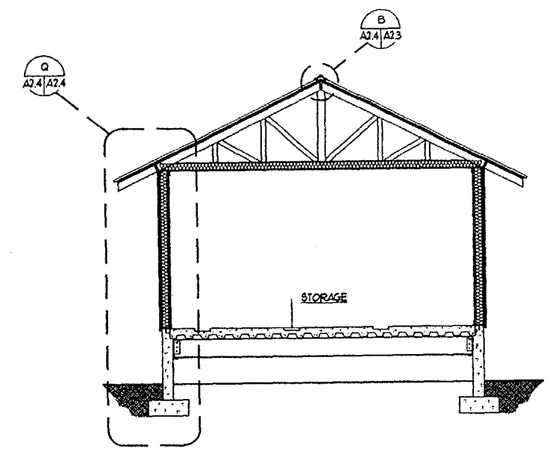

B A2.1 A2.4 BLDG. CROSS SECTION
1/4" = 1'-0"

SPENCER A. LEINENWEBER
LICENSED PROFESSIONAL ARCHITECT
No. 4269
HAWAII, U.S.A.

This work was prepared by me or under my supervision, and construction of this project will be under my observation.

DESIGNED: SL DRAWN: WL TECH. REVIEW: DATE: 2/21/03	SUB SHEET NO. A2.4	TITLE OF SHEET CURATORIAL FACILITY CROSS SECTIONS & TYP. WALL SECTIONS Kalaupapa National Historical Park	DRAWING NO. 491 / 41,016 PKG. NO. KALA 211-2 SHEET 21 OF 71

KALA211-CF-EL.DWG 07/20/02 01:38

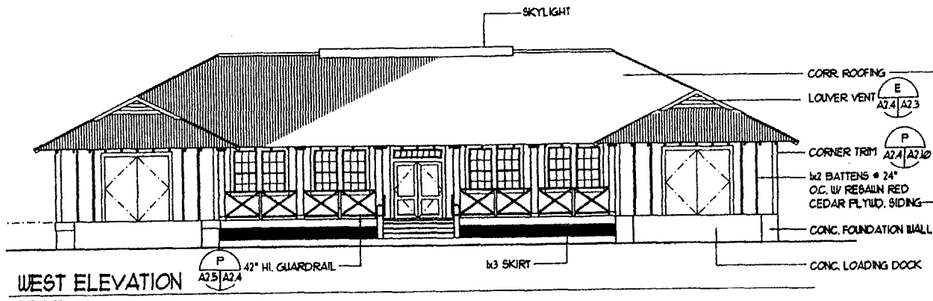

WEST ELEVATION

1/8"=1'-0"

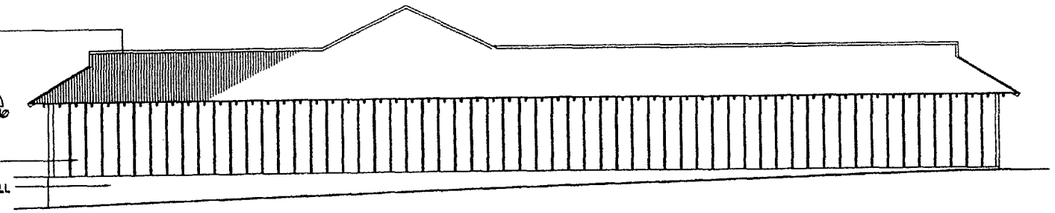

SOUTH ELEVATION

1/8"=1'-0"

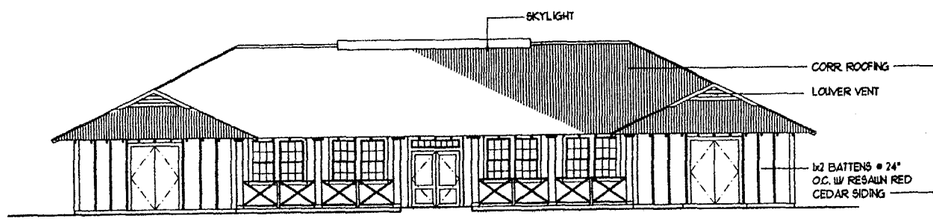

EAST ELEVATION

1/8"=1'-0"

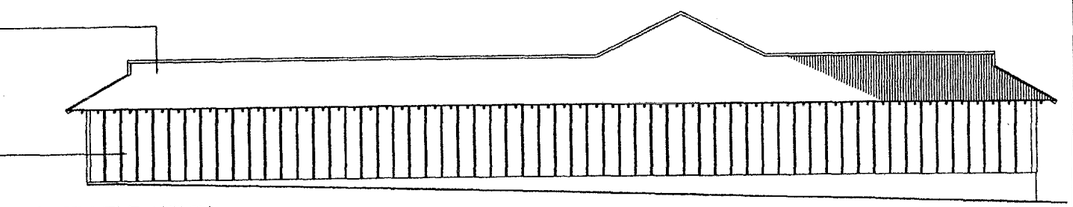

NORTH ELEVATION

1/8"=1'-0"

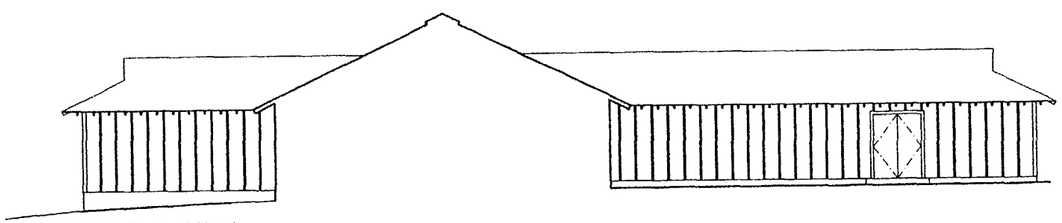

SOUTH ELEVATION

1/8"=1'-0"

A. SPENCER A. LEINENBACH LICENSED PROFESSIONAL ARCHITECT No. 4269 HAWAII, U.S.A.

This work was prepared by me or under my supervision, and construction of this project will be under my observation.

DESIGNED: SL	SUB SHEET NO.	TITLE OF SHEET	DRAWING NO. 491 / 41,016
DRAWN: UL		CURATORIAL FACILITY EXTERIOR ELEVATIONS	PKG. NO. KALA 211-S
TECH. REVIEW:			SHEET 22
DATE: 2/21/03	A2.5	Kalaupapa National Historical Park	OF 71

KALA211-CF-EL.DWG 07/28/02 01:39

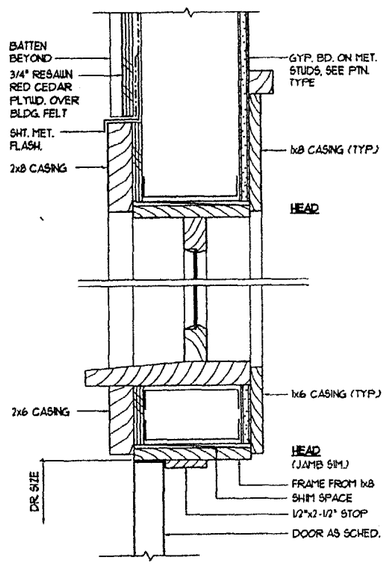

F A2.6 A2.6 EXT. DOOR DETAIL 3" = 1'-0" D-DR-EXT

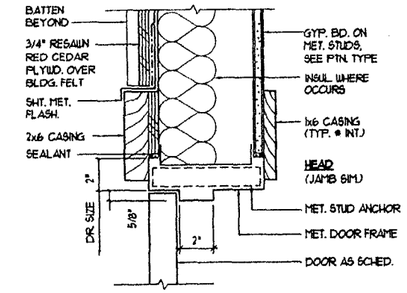

B A2.6 A2.6 EXT. DOOR DETAIL TYP. FOR 1 HR. 3" = 1'-0" D-DR-1-HR-EXT

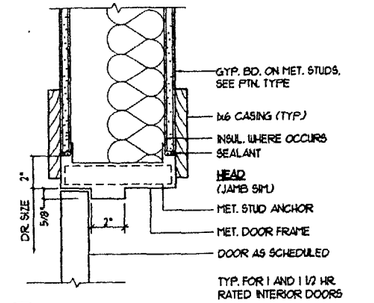

C A2.6 A2.6 INT. DOOR DETAIL 3" = 1'-0" D-DR-1-HR-INT

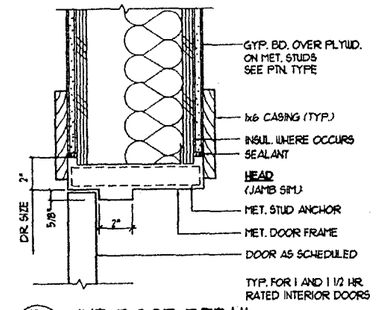

D A2.6 A2.6 INT. DOOR DETAIL 3" = 1'-0" D-DR-1-HR-STRUCT-INT

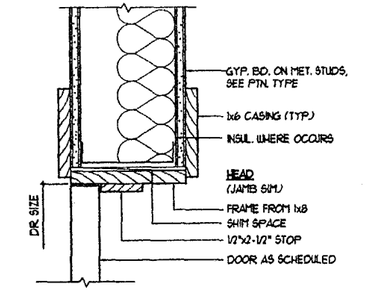

E A2.6 A2.6 INT. DOOR DETAIL 3" = 1'-0" D-DR-INT

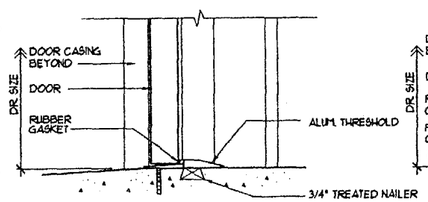

G A2.6 A2.6 DOOR DETAIL - THRESHOLD 3" = 1'-0" D-THR-ALUM

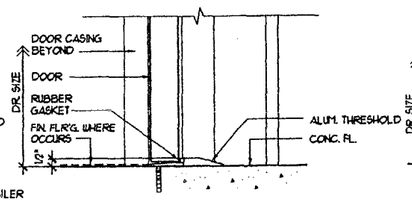

H A2.6 A2.6 DOOR DETAIL - THRESHOLD 3" = 1'-0" D-THR-ALUM2

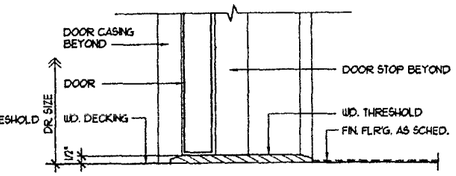

I A2.6 A2.6 DOOR DETAIL - THRESHOLD 3" = 1'-0" D-THR-WD

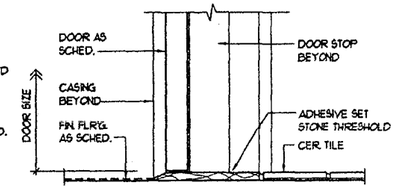

J A2.6 A2.6 THRESHOLD DET. 3" = 1'-0"

DOOR SCHEDULE

DOOR NO.	DOOR SIZE (W x H)	DOOR TYPE	DOOR THK.	FRAME MATERIAL	DETAIL HEAD	DETAIL JAMB	DETAIL THRESHOLD	HOUR SET	REMARKS
1	6'-0" x 7'-0"	A	1-3/4"	WD.	F/A2.6	F/A2.6	1/A2.6		
2	6'-0" x 7'-0"	A	1-3/4"	WD.	F/A2.6	F/A2.6	1/A2.6		
3	6'-0" x 7'-0"	B	1-3/4"	STL.	B/A2.6	B/A2.6	H/A2.6		SELF CLOSURE W/ SMOKE GASKET
4	6'-0" x 7'-0"	B	1-3/4"	STL.	B/A2.6	B/A2.6	H/A2.6		SELF CLOSURE W/ SMOKE GASKET
5	8'-0" x 8'-0"	C	1-3/4"	STL.	B/A2.6	B/A2.6	G/A2.6		SELF CLOSURE W/ SMOKE GASKET
6	6'-0" x 8'-0"	C	1-3/4"	STL.	B/A2.6	B/A2.6	G/A2.6		SELF CLOSURE W/ SMOKE GASKET
7	6'-0" x 8'-0"	C	1-3/4"	STL.	B/A2.6	B/A2.6	G/A2.6		SELF CLOSURE W/ SMOKE GASKET
8	8'-0" x 8'-0"	C	1-3/4"	STL.	B/A2.6	B/A2.6	G/A2.6		SELF CLOSURE W/ SMOKE GASKET
9	8'-0" x 8'-0"	C	1-3/4"	STL.	B/A2.6	B/A2.6	G/A2.6		SELF CLOSURE W/ SMOKE GASKET
10	8'-0" x 8'-0"	C	1-3/4"	STL.	B/A2.6	B/A2.6	G/A2.6		SELF CLOSURE W/ SMOKE GASKET
11	6'-0" x 7'-0"	B	1-3/4"	STL.	C/A2.6	C/A2.6	H/A2.6		SELF CLOSURE W/ SMOKE GASKET
~~12~~	~~6'-0" x 7'-0"~~	~~D~~	~~1-3/8"~~	~~WD.~~	~~E/A2.6~~	~~E/A2.6~~	~~1/A2.6~~		~~———~~
13	6'-0" x 7'-0"	D	1-3/8"	WD.	E/A2.6	E/A2.6	1/A2.6		
14	6'-0" x 7'-0"	B	1-3/4"	WD.	C/A2.6	C/A2.6	H/A2.6		SELF CLOSURE W/ SMOKE GASKET
15	4'-0" x 7'-0"	E	1-3/8"	WD.	E/A2.6	E/A2.6	-		
16	2'-8" x 7'-0"	D	1-3/8"	WD.	E/A2.6	E/A2.6	-		
17	3'-0" x 7'-0"	D	1-3/8"	WD.	E/A2.6	E/A2.6	J/A2.6		
18	4'-0" x 7'-0"	E	1-3/8"	WD.	E/A2.6	E/A2.6	-		
19	6'-0" x 8'-0"	C	1-3/4"	STL.	D/A2.6	D/A2.6	G/A2.6		
20	6'-0" x 8'-0"	C	1-3/4"	STL.	D/A2.6	D/A2.6	G/A2.6		

DOOR TYPES

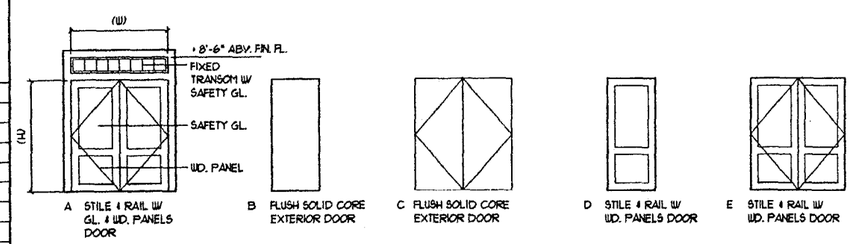

SPENCER A. LEINCKNECHT LICENSED PROFESSIONAL ARCHITECT No. 4269 HAWAII, U.S.A.

This work was prepared by me or under my supervision, and construction of this project will be under my observation.

DESIGNED: SL	SUB SHEET NO.	TITLE OF SHEET	DRAWING NO. 491 41,016
DRAWN: UL		CURATORIAL FACILITY	PKG. NO. KALA 211-5
TECH. REVIEW:		DOOR SCHEDULE, TYPES & DETAILS	SHEET 23
DATE: 2/21/03	A2.6	Kalaupapa National Historical Park	OF 71

24/72

WINDOW TYPES

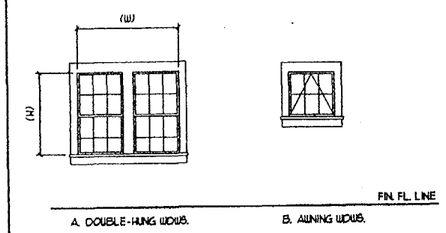

WINDOW SCHEDULE

WDW. NO.	SIZE (WxH)	TYPE		DETAIL HEAD	DETAIL JAMB	DETAIL SILL	REMARKS
1	6'-6 1/2" x 5'-6"	A		Q/A2.7	Q/A2.7	Q/A2.7	
2	6'-6 1/2" x 5'-6"	A		Q/A2.7	Q/A2.7	Q/A2.7	
3	6'-6 1/2" x 5'-6"	A		Q/A2.7	Q/A2.7	Q/A2.7	
4	6'-6 1/2" x 5'-6"	A		Q/A2.7	Q/A2.7	Q/A2.7	
5	6'-6 1/2" x 5'-6"	A		Q/A2.7	Q/A2.7	Q/A2.7	
6	6'-6 1/2" x 5'-6"	A		Q/A2.7	Q/A2.7	Q/A2.7	
7	6'-6 1/2" x 5'-6"	A		Q/A2.7	Q/A2.7	Q/A2.7	
8	2'-10" X 2'-10"	B		P/A2.7	P/A2.7	P/A2.7	

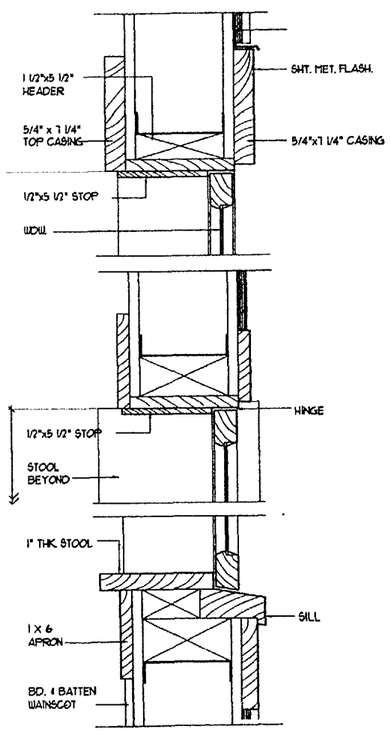

P (A2.7 | A2.7) AWNING WDW. DET.
3" = 1'-0"

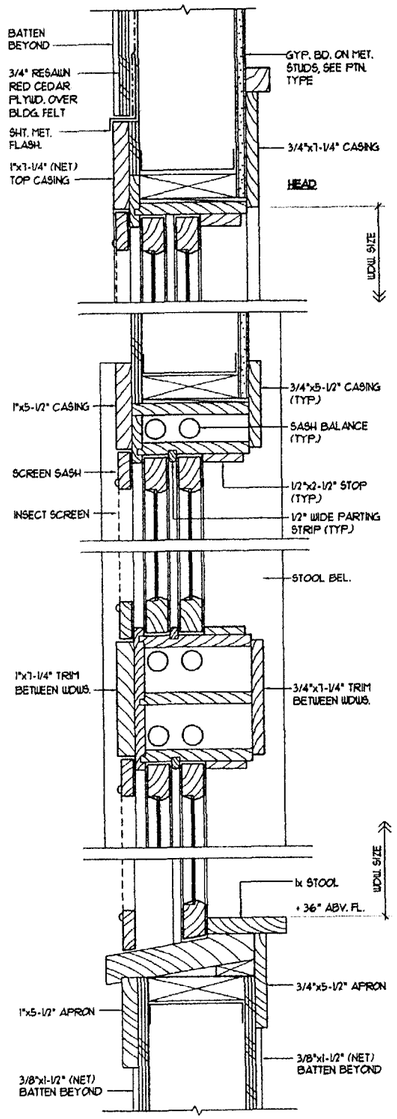

Q (A2.7 | A2.7) DOUBLE-HUNG WDW. DET.
3" = 1'-0"
D-WDW-DH

A. SPENCER LEINENWEBER
LICENSED PROFESSIONAL ARCHITECT
No. 4269
HAWAII, U.S.A.

This work was prepared by me or under my supervision, and construction of this project will be under my observation.

DESIGNED: SL	SUB SHEET NO.	TITLE OF SHEET	DRAWING NO. 491 / 41,016
DRAWN: WL		CURATORIAL FACILITY	PKG. NO. KALA 211-S
TECH. REVIEW:		WINDOW SCHEDULE, TYPES & DETAILS	SHEET 24
DATE: 2/21/03	A2.7	Kalaupapa National Historical Park	OF 71

25/72

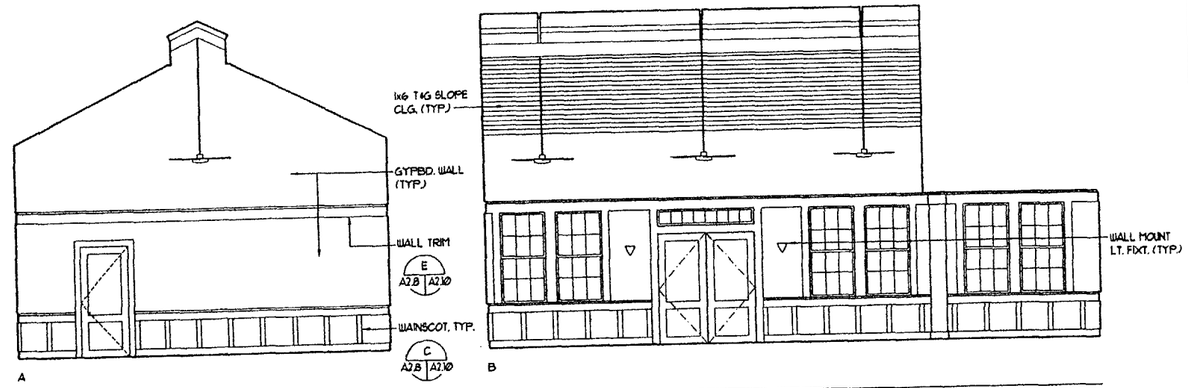

ADMINISTRATION

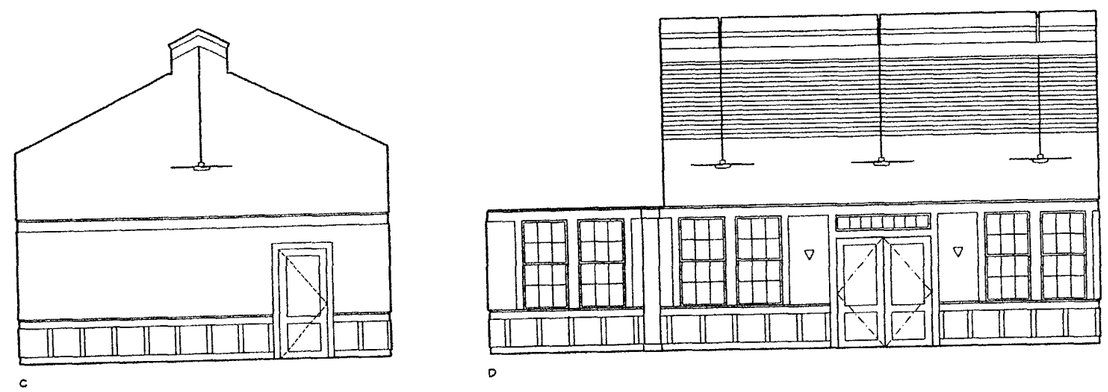

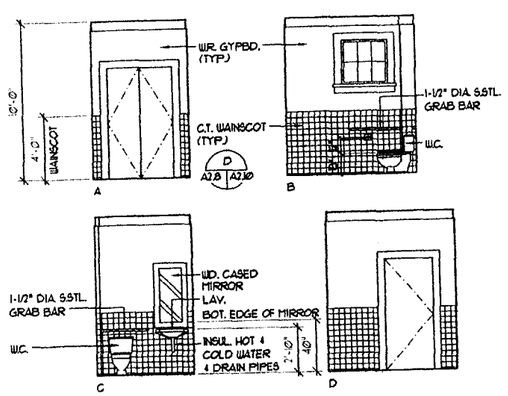

TOILET

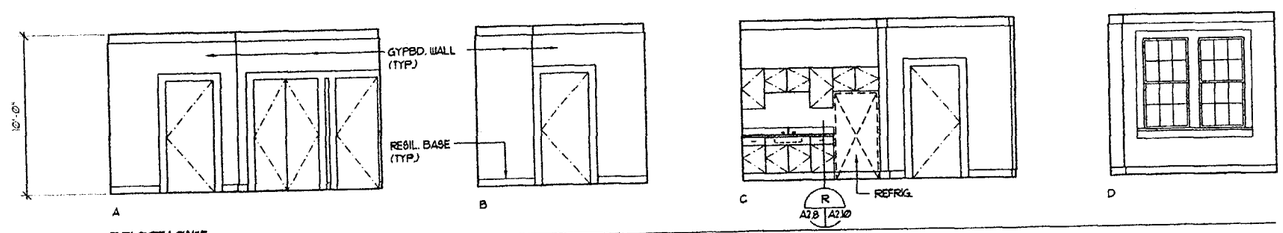

EMPLOYEE LOUNGE

SPENCER A. LEINENWEBER
LICENSED PROFESSIONAL ARCHITECT
No. 4269
HAWAII, U.S.A.

This work was prepared by me or under my supervision, and construction of this project will be under my observation.

DESIGNED: SL	SUB SHEET NO.	TITLE OF SHEET	DRAWING NO. 491 / 41,016
DRAWN: WL		CURATORIAL FACILITY INTERIOR ELEVATIONS	PKG. NO. KAHA 211-S
TECH. REVIEW:	A2.8	Kalaupapa National Historical Park	SHEET 25 OF 71
DATE: 2/21/03			

KALA211-CF-13-INT.DWG 07/17/02 16:26

26/72

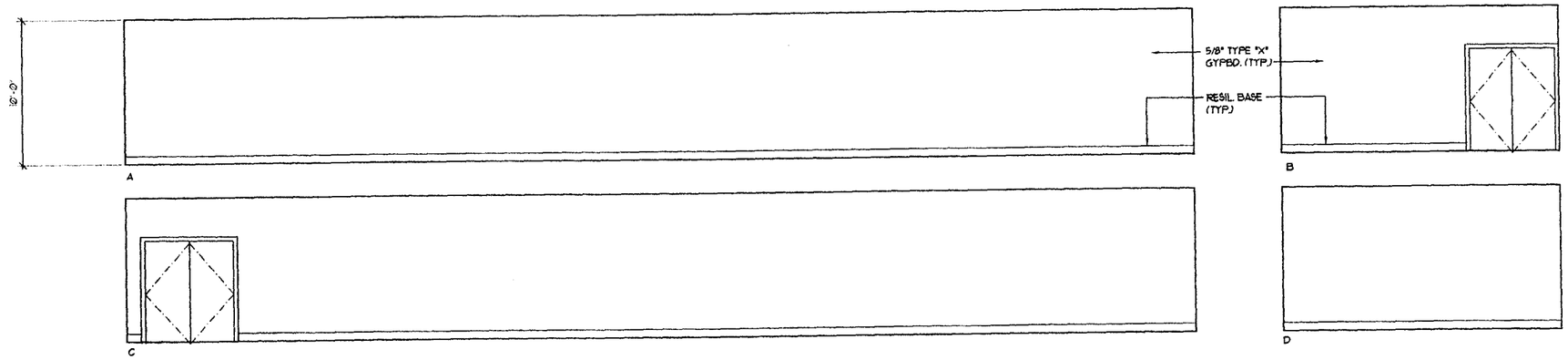

STORAGE

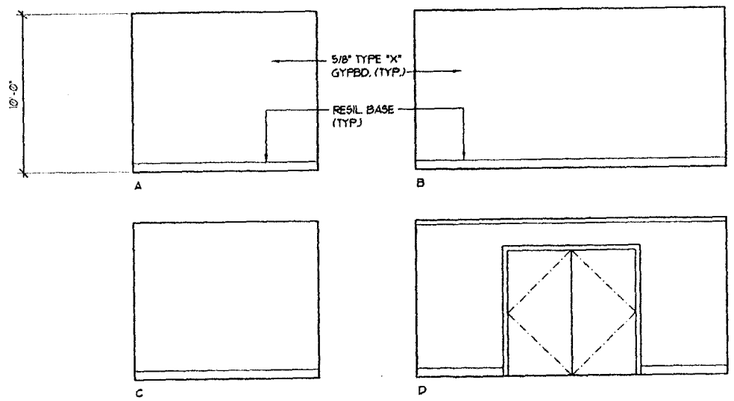

MECHANICAL ROOM

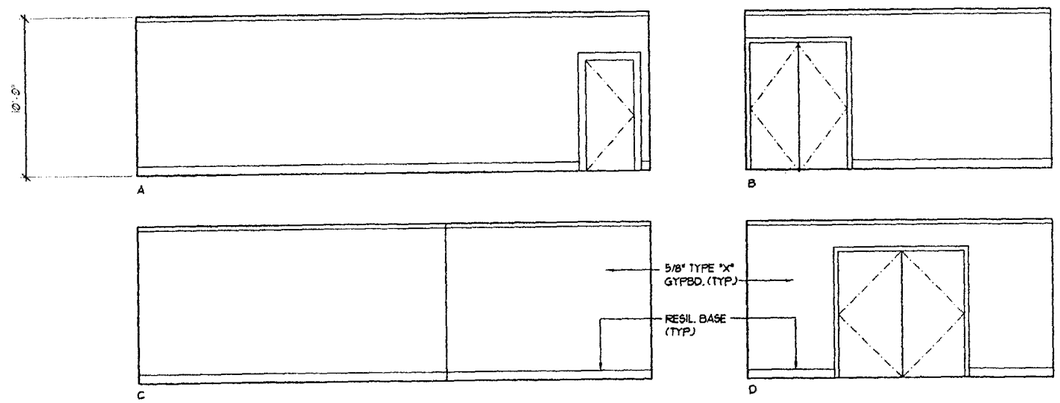

RECEIVING

SPENCER A. LEINENWEBER
LICENSED PROFESSIONAL ARCHITECT
No. 4269
HAWAII, U.S.A.

This work was prepared by me or under my supervision, and construction of this project will be under my observation.

DESIGNED: SL	SUB SHEET NO.	TITLE OF SHEET	DRAWING NO. 491 41,016
DRAWN: WL		CURATORIAL FACILITY INTERIOR ELEVATIONS	PKG. NO. KALA 211-S
TECH. REVIEW:	A2.9	Kalaupapa National Historical Park	SHEET 26 OF 71
DATE: 2/21/03			

KALA211-CF-13-INT.DWG 07/17/02 16:26

27/72

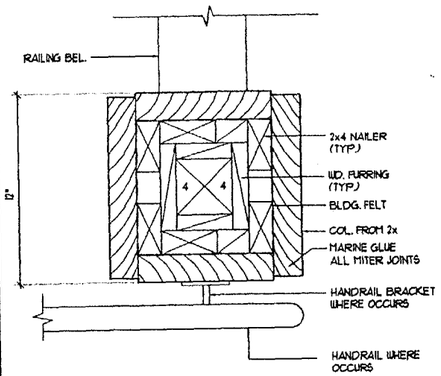

A (A2.1 | A2.10) COL. DET. - PLAN VIEW
3" = 1'-0"
D-COL-PL

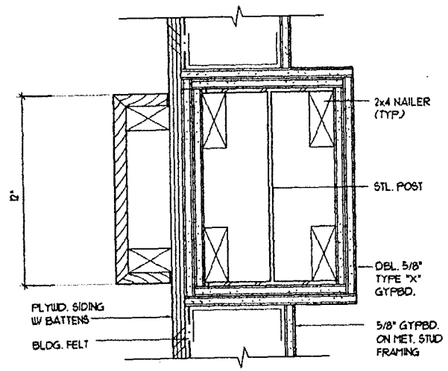

B (A2.1 | A2.10) COL. DET. - PLAN VIEW
3" = 1'-0"
1-HOUR
D-1HR-COL-PL

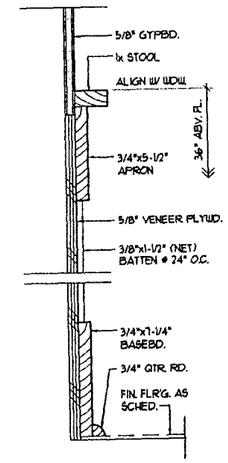

C (A2.8 | A2.10) WALL/WAINSCOT DET.
3" = 1'-0"
D-WD-WAINSCOT

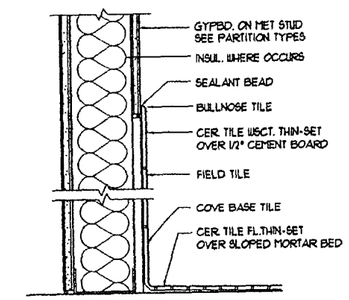

D (A2.9 | A2.10) TILE WAINSCOT
3" = 1'-0"
D-TILE-WAIN

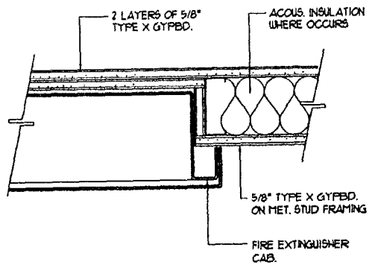

A (A2.1 | A2.10) FIRE EXTINGUISHER CAB. DET.
SCALE: 3" = 1'-0"
D-FIRE-CAB

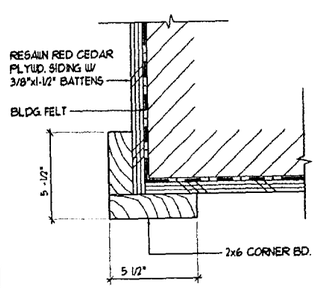

P (A2.5 | A2.10) CORNER TRIM DETAIL
3" = 1'-0"
D-CORNER-TRIM

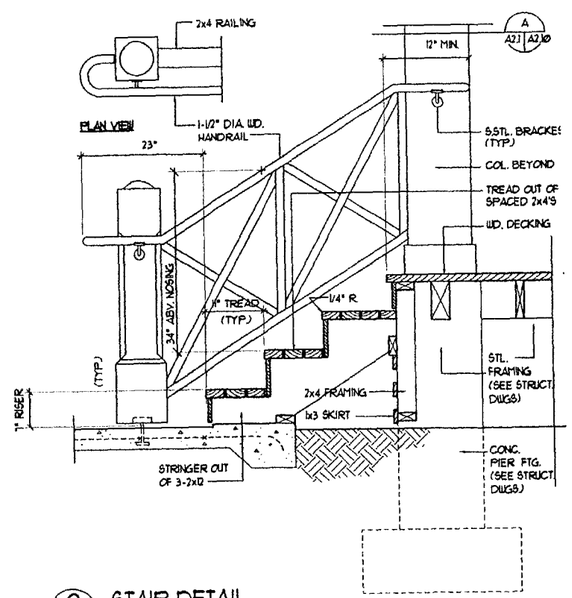

Q (A2.4 | A2.10)
A2.1
STAIR DETAIL
1" = 1'-0"
D-STAIR

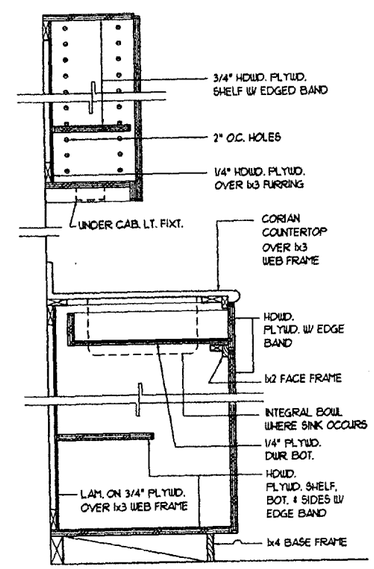

R (A2.8 | A2.10) COUNTER-CABINET DET.
1-1/2" = 1'-0"
D-CABI

A. SPENCER A. LEINENBERGER
LICENSED PROFESSIONAL ARCHITECT
No. 4269
HAWAII, U.S.A.

This work was prepared by me or under my supervision, and construction of this project will be under my observation.

DESIGNED: SL	SUB SHEET NO.	TITLE OF SHEET	DRAWING NO. 491 / 41,016
DRAWN: WL		CURATORIAL FACILITY	PKG. NO. KALA 211-5
TECH. REVIEW:		DETAILS	SHEET 27
DATE: 2/21/03	A2.10	Kalaupapa National Historical Park	OF 71

28/72

GENERAL

1. ALL WORK SHALL CONFORM TO THE 1997 UNIFORM BUILDING CODE AND THE COUNTY OF MAUI AMENDMENTS.
2. ALL MATERIALS AND WORKMANSHIP SHALL CONFORM TO THE DRAWINGS AND SPECIFICATIONS.
3. THE STRUCTURAL DRAWINGS AND SPECIFICATIONS REPRESENT THE FINISHED STRUCTURE. THEY DO NOT INDICATE THE METHOD OF CONSTRUCTION. DURING THE CONSTRUCTION PERIOD, THE CONTRACTOR SHALL BE RESPONSIBLE FOR THE SAFETY OF THE BUILDING. OBSERVATION VISITS TO THE JOB SITE BY THE CONTRACTING OFFICER SHALL NOT INCLUDE REVIEW OR INSPECTION OF THE ABOVE ITEMS.
4. EXISTING CONDITIONS AND DIMENSIONS SHALL BE FIELD VERIFIED BY THE CONTRACTOR PRIOR TO CONSTRUCTION. DRAWINGS SHALL NOT BE SCALED TO DETERMINE DIMENSIONS. IF ANY DISCREPANCIES OCCUR, THE CONTRACTOR SHALL BRING THIS TO THE IMMEDIATE ATTENTION OF THE CONTRACTING OFFICER FOR POSSIBLE MODIFICATION TO ACCOMMODATE FIELD CONDITIONS.
5. DUE TO THE NATURE OF THE WORK BEING UNDERTAKEN, IT MAY BE NECESSARY TO SUPPLEMENT THE CONSTRUCTION DOCUMENTS WITH ADDITIONAL DRAWINGS AND INSTRUCTIONS TO ACCOMMODATE EXISTING FIELD CONDITIONS. THE CONTRACTOR SHALL ANTICIPATE THAT THESE CONDITIONS WILL OCCUR. THE INTENT OF THE DRAWINGS SHALL CONTROL AND THERE SHALL BE NO ASSOCIATED COST OR TIME IMPACT.
6. WHERE CONDITIONS ARE NOT SPECIFICALLY INDICATED, BUT ARE OF SIMILAR CHARACTER TO THAT SHOWN, SIMILAR CONSTRUCTION SHALL BE USED SUBJECT TO REVIEW BY THE CONTRACTING OFFICER. THE CONTRACTOR SHALL SUBMIT A WRITTEN CLARIFICATION WITH AN ACCURATE SKETCH DEPICTING THESE CONDITIONS AND OBTAIN A WRITTEN RESPONSE FROM THE CONTRACTING OFFICER PRIOR TO PROCEEDING WITH THE WORK. THIS SHALL NOT CONSTITUTE A BASIS FOR ADDITIONAL WORK.
7. ALL MATERIALS NOT LISTED AS EXISTING SHALL BE UNDERSTOOD TO BE NEW MATERIALS.
8. THE CONTRACTOR SHALL BE SOLELY RESPONSIBLE FOR COORDINATING THE WORK OF ALL TRADES AND SHALL CHECK ALL DIMENSIONS. ALL DISCREPANCIES SHALL BE CALLED TO THE ATTENTION OF THE CONTRACTING OFFICER AND BE RESOLVED BEFORE PROCEEDING WITH THE WORK.
9. NOTES AND DETAILS ON DRAWINGS SHALL TAKE PRECEDENCE OVER GENERAL NOTES AND TYPICAL DETAILS.
10. SEE MECHANICAL, PLUMBING AND ELECTRICAL DRAWINGS FOR SIZE AND LOCATION OF ALL OPENINGS REQUIRED FOR DUCTS, PIPES AND ALL PIPE SLEEVES, ELECTRICAL CONDUITS, AND OTHER ITEMS TO BE EMBEDDED IN CONCRETE OR OTHERWISE INCORPORATED IN STRUCTURAL WORK. REINFORCE ALL OPENINGS, POCKETS, ETC., LARGER THAN 8" IN SLABS, DECKS, BEAMS, JOISTS, COLUMNS, WALLS, ETC. SUBMIT REINFORCING DETAILS TO THE CONTRACTING OFFICER WHEN DRAWINGS BY OTHERS SHOW OPENINGS, POCKETS, ETC., LARGER THAN 6" NOT SHOWN ON THE STRUCTURAL DRAWINGS, BUT WHICH ARE LOCATED IN STRUCTURAL MEMBERS. THE GENERAL CONTRACTOR SHALL VERIFY THE SIZE AND LOCATION OF ALL MECHANICAL AND ELECTRICAL OPENINGS.
11. SPECIAL NOTE: ARCHITECTURAL DRAWINGS TO BE USED IN CONJUNCTION WITH THE STRUCTURAL DESIGN DRAWINGS AND ARE TO BE USED TO DEFINE DETAIL CONFIGURATION INCLUDING, BUT NOT LIMITED TO, RELATIVE LOCATION OF MEMBERS, ELEVATIONS, LOCATIONS OF ALL OPENINGS, DEPRESSIONS, SLOPES, JOINTS, DIMENSIONS, ETC.
12. CONSTRUCTION MATERIALS SHALL BE SPREAD OUT IF PLACED ON ROOF. LOAD SHALL NOT EXCEED THE DESIGN LIVE LOAD PER SQUARE FOOT. PROVIDE ADEQUATE SHORING, RESHORING AND/OR BRACING WHERE STRUCTURE HAS NOT ATTAINED DESIGN STRENGTH.

FOUNDATION

1. SUBGRADE SOILS BENEATH FOOTINGS SHALL BE OVEREXCAVATED TO AT LEAST 6 INCHES BELOW BOTTOM OF FOOTINGS. THE OVEREXCAVATION SHALL BE BACKFILLED WITH COMPACTED STRUCTURAL FILL. THE OVEREXCAVATION SUBGRADE SHALL BE COMPACTED TO AT LEAST 90 PERCENT RELATIVE COMPACTION, AND STRUCTURAL FILL SHALL BE COMPACTED TO AT LEAST 95 PERCENT RELATIVE COMPACTION. IN ADDITION, FOOTING BOTTOM SHALL BE EMBEDDED AT 12 INCHES BELOW EXISTING GRADE, OR 12 INCHES BELOW FINISHED GRADE, WHICHEVER IS DEEPER.
2. FOOTING BACKFILL AND UTILITY TRENCH BACKFILL WITHIN BUILDING AREA SHALL BE MECHANICALLY COMPACTED IN LAYERS, FLOODING WILL NOT BE PERMITTED. SOFT OR LOOSE AREAS THAT DO NOT READILY COMPACT AND SOILS THAT SHOW PUMPING CHARACTERISTICS DURING COMPACTION SHALL BE EXCAVATED TO REMOVE THE SOFT OR LOOSE MATERIAL, AND SHALL BE BACKFILLED WITH STRUCTURAL FILL. ONSITE EXCAVATED SOIL SHALL NOT BE USED AS STRUCTURAL FILL.
3. CONTRACTOR SHALL PROVIDE FOR DE-WATERING OF EXCAVATIONS FROM EITHER SURFACE WATER, GROUND WATER OR SEEPAGE.
4. CONTRACTOR SHALL PROVIDE FOR DESIGN AND INSTALLATION OF ALL CRIBBING, SHEATHING, AND SHORING NECESSARY TO SAFELY RETAIN EXCAVATIONS AND EARTH BANKS.

CONCRETE

1. ALL CONCRETE, UNLESS OTHERWISE NOTED, SHALL BE REGULAR WEIGHT HARD ROCK TYPE (150 PCF). SILICEOUS AGGREGATES (NATURAL SAND AND ROCK) SHALL CONFORM TO ASTM C33 WITH SHRINKAGE CHARACTERISTICS OF LESS THAN 0.05%.
2. ULTIMATE COMPRESSIVE STRENGTH (AT 28 DAYS) SHALL BE 4000 PSI MIN. MAXIMUM WATER TO CEMENTITIOUS MATERIAL RATIO SHALL BE 0.50.
3. PLACEMENT OF CONCRETE SHALL BE IN CONFORMANCE WITH ACI 301.
4. CONCRETE SHALL BE MAINTAINED IN A CONTINUOUS MOIST CONDITION FOR A MINIMUM OF FIVE (5) DAYS AFTER PLACEMENT. ALTERNATE METHODS WILL BE APPROVED IF SATISFACTORY PERFORMANCE CAN BE ASSURED.
5. CONCRETE MIXES SHALL BE DESIGNED BY A QUALIFIED TESTING LABORATORY AND SHALL BE SUBMITTED TO THE CONTRACTING OFFICER FOR HIS REVIEW.
6. CONCRETE MIXING OPERATION, ETC. SHALL CONFORM TO ASTM C-94.
7. CLEAR COVERAGE OF CONCRETE OVER OUTER REINFORCING BARS SHALL BE AS FOLLOWS UNLESS OTHERWISE NOTED:
   A. CONCRETE POURED DIRECTLY AGAINST EARTH ..... 3" CLEAR TO REINFORCING
   B. CONCRETE FORMED AND EXPOSED TO EARTH OR WEATHER ..... 1½" CLEAR FOR #6 BARS AND SMALLER; 2" CLEAR FOR #8 BARS AND LARGER
   C. CAST-IN-PLACE SLABS NOT EXPOSED TO EARTH OR WEATHER..... 1" CLEAR AT TOP & BOTTOM
8. PROJECTING CORNERS OF BEAMS, WALLS, COLUMNS, ETC., SHALL BE FORMED WITH 3/4" CHAMFER, UNLESS OTHERWISE NOTED ON ARCHITECTURAL DRAWINGS.
9. CURING COMPOUND SHALL BE USED ON CONCRETE SLABS; IT SHALL BE APPROVED BY THE TILE MANUFACTURER BEFORE USE ON AREAS TO RECEIVE A RESILIENT TILE FINISH.
10. ALL ROUGHENED SURFACES IN CONCRETE SHALL BE MADE WITH A MINIMUM AMPLITUDE OF 1/4".

REINFORCING STEEL

1. ALL REINFORCING STEEL SHALL BE DETAILED AND PLACED IN CONFORMANCE WITH THE "BUILDING CODE REQUIREMENTS FOR REINFORCED CONCRETE" (ACI 318), THE CRSI "MANUAL OF STANDARD PRACTICE," AND THE "ACI DETAILING MANUAL" (SP-66) AS MODIFIED BY THE PROJECT DRAWINGS AND SPECIFICATIONS.
2. REINFORCING BARS SHALL CONFORM TO ASTM A-615 GRADE 60 REQUIREMENTS. ASTM A-706 GRADE 60 REBAR IS REQUIRED WHERE INDICATED ON THE DRAWINGS.
3. ANCHOR BOLTS, DOWELS AND OTHER EMBEDDED ITEMS ARE TO BE SECURELY TIED IN PLACE BEFORE CONCRETE IS POURED.
4. WELDED WIRE FABRIC (WWF) SHALL CONFORM TO ASTM A-185. WELDED WIRE FABRIC IN SUSPENDED SLABS SHALL HAVE FY = 60 KSI. LAP 6" MINIMUM OR ONE FULL MESH, WHICHEVER IS GREATER FOR SLABS ON GRADE.
5. REINFORCING SPLICES SHALL BE MADE ONLY WHERE INDICATED ON THE DRAWINGS.
6. DOWELS BETWEEN FOOTING AND WALL OR COLUMNS SHALL BE THE SAME GRADE, SIZE AND SPACING OR NUMBER AS THE VERTICAL REINFORCING RESPECTIVELY, UNLESS OTHERWISE NOTED.
7. WELDING OF REINFORCING STEEL IS NOT PERMITTED UNLESS OTHERWISE SHOWN ON THE DRAWINGS.
8. CONTRACTOR SHALL SUBMIT REINFORCING BAR LAYOUTS AND DETAILS FOR CONTRACTING OFFICER'S REVIEW PRIOR TO FABRICATION. FABRICATE FROM REVIEWED DRAWINGS ONLY.

STRUCTURAL STEEL & METAL DECK

1. STRUCTURAL STEEL SHALL BE DETAILED, FABRICATED AND ERECTED IN ACCORDANCE WITH THE "AISC SPECIFICATION FOR THE DESIGN, FABRICATION AND ERECTION OF STRUCTURAL STEEL FOR BUILDINGS."
2. ALL STRUCTURAL STEEL SHALL CONFORM TO THE ASTM DESIGNATION A-992, GRADE 50 UNLESS OTHERWISE NOTED. PLATES, ANGLES, AND CHANNELS SHALL CONFORM TO THE ASTM DESIGNATION A-36.
3. PIPE COLUMNS SHALL CONFORM TO ASTM A53, GRADE B. ALL STEEL TUBES SHALL CONFORM TO ASTM A 500, GRADE B.
4. MACHINE BOLTS SHALL CONFORM TO ASTM A-307, GRADE A EXCEPT AS NOTED. HIGH STRENGTH BOLTS SHALL CONFORM TO ASTM A-325 TYPE SC, UNLESS OTHERWISE NOTED.
5. SHEAR STUDS SHALL CONFORM TO ASTM A-108, GRADES 1010 TO 1020, HAVING A MINIMUM YIELD STRENGTH OF 50,000 PSI.
6. BOLT HOLES IN STEEL SHALL BE 1/16" LARGER DIAMETER THAN NOMINAL SIZE OF BOLT USED, EXCEPT AS NOTED.
7. ALL WELDS SHALL BE IN CONFORMITY WITH THE STRUCTURAL WELDING CODE AWS D1.1 OF THE AMERICAN WELDING SOCIETY, SEE SPECIFICATIONS.
8. ALL STRUCTURAL STEEL SURFACES TO BE FIELD WELDED, SURFACES SUPPORTING METAL DECKING. SURFACES WITH WELDED STUDS SHALL BE LEFT UNPAINTED.
9. ALL EXPOSED STRUCTURAL STEEL AND MISCELLANEOUS METAL SHALL BE HOT DIP GALVANIZED AFTER FABRICATION.
10. THE STRUCTURAL STEEL FABRICATOR SHALL FURNISH SHOP DRAWINGS OF ALL STEEL AND STEEL DECKING, RESPECTIVELY, FOR CONTRACTING OFFICER'S REVIEW BEFORE FABRICATION.
11. THE STEEL DECKING SHALL BE OF THE TYPE AND GAUGE AS CALLED FOR ON THE DRAWINGS. DECKING AND ALL ACCESSORIES SHALL BE FORMED FROM STEEL SHEETS HAVING A MINIMUM YIELD STRENGTH OF 33,000 PSI AND CONFORMING TO ASTM A-446, GRADE A. THE STEEL SHALL HAVE A METAL PROTECTIVE COATING OF ZINC, SEE SPECIFICATIONS. DECK UNITS SHALL SPAN OVER THREE OR MORE SUPPORTS WHERE POSSIBLE.
12. MINIMUM BEARING OF DECKING ON SUPPORTS SHALL BE 2". SHEETS SHALL BE ATTACHED TO ALL SUPPORTING STEEL MEMBERS BY WELDING AS INDICATED ON THE DRAWINGS AND IN ACCORDANCE WITH MANUFACTURER'S RECOMMENDATIONS. UPON COMPLETION OF ERECTION, ALL WELDS SHALL HAVE TOUCH-UP.
13. ALL GROUT BELOW BASE PLATES BEARING ON CONCRETE SHALL BE NON-SHRINK WITH F'c=5000 PSI. SEE SPECIFICATIONS FOR ADDITIONAL INFORMATION.

WOOD

1. ALL FRAMING LUMBER SHALL BE DOUGLAS FIR, GRADED AS FOLLOWS:
   JOISTS (2" WIDE) .....NO. 1 & BETTER
   BEAM (GREATER THAN 2" WIDE).....NO. 1 & BETTER
   POSTS .....NO. 1
   STUDS .....STANDARD
2. SPECIE AND GRADES NOTED ABOVE ARE THE MINIMUM REQUIRED.
3. PLYWOOD: A. ALL WALL SHEATHING AND ROOF DECK SHALL BE APA RATED SHEATHING, EXTERIOR PLYWOOD.
   B. ROOF SHEATHING SHALL BE 1/2 INCH THICK MINIMUM, U.O.N.
   C. STAGGER ENDS OF SHEETS.
   D. PROVIDE CONTINUOUS BLOCKING AT EDGES OF ALL FLOOR SHEETS.
4. ALL NAILS SHALL BE GALVANIZED.
5. ALL WOOD AND PLYWOOD PRODUCTS SHALL BE PRESSURE- PRESERVATIVE-TREATED.
6. MINIMUM NAILING SHALL COMPLY WITH TABLE 23-1-Q OF THE U.B.C. ALL NAILS SHALL BE GALVANIZED COMMON WIRE NAILS.
7. ALL BOLTS SHALL BE GALVANIZED. BOLT HOLES SHALL BE 1/16" LARGER DIAMETER THAN NOMINAL SIZE OF BOLT USED. RETIGHTEN ALL NUTS PRIOR TO CLOSING IN. STANDARD GALVANIZED CUT WASHERS SHALL BE USED UNDER BOLT HEADS AND NUTS AGAINST WOOD.
8. DO NOT BORE OR NOTCH JOISTS, RAFTERS OR BEAMS. OBTAIN CONTRACTING OFFICER'S APPROVAL FOR ANY HOLES OR NOTCHES.
9. ALL CONNECTOR REFERENCES, UNLESS NOTED OTHERWISE, ARE FROM "SIMPSON COMPANY STRONG-TIE" CATALOG, AND SHALL BE HOT DIPPED GALVANIZED WITH GALVANIZED FASTENERS. ALL SIMPSON CONNECTORS EXPOSED TO WEATHER SHALL BE Z-MAX TRIPLE ZINC COATED GALVANIZED.

GLUED-LAMINATED WOOD

1. GLUED LAMINATED WOOD BEAMS SHALL BE DOUGLAS FIR WITH EXTERIOR TYPE ADHESIVES. SIMPLE SPAN BEAMS SHALL BE COMBINATION 24F-V4. CONTINUOUS BEAMS, CANTILEVERED BEAMS, AND ROOF BEAMS SHALL BE COMBINATION 24F-V8.
2. LAMINATIONS FOR "GLU-LAM" BEAMS SHALL BE 1½" THICK. ALL LAMINATIONS SHALL BE PARALLEL TO THE BOTTOM EDGE OF THE BEAM.
3. BEAMS SHALL BE ARCHITECTURAL APPEARANCE GRADE.
4. BOTTOM EDGE OF BEAM SHALL FOLLOW 1200 FT. RADIUS LINE UNLESS SPECIFIC CAMBERS ARE GIVEN.
5. SHOP DRAWINGS SHALL BE SUBMITTED TO CONTRACTING OFFICER AND REVIEWED PRIOR TO FABRICATION.
6. ALL GLUED LAMINATED WOOD BEAMS SHALL BE PRESSURE-PRESERVATIVE-TREATED.

CONCRETE REPAIRS

1. THE CONTRACTOR SHALL SOUND ALL SURFACES AT EXISTING CONCRETE WALLS OR BEAMS TO IDENTIFY ANY ADDITIONAL SPALLS AND DELAMINATIONS.
   A. THE CONTRACTOR SHALL ALLOW FOR 200 SQ. FT. OF CONCRETE SPALL REPAIR IN ADDITION TO THE WORK SPECIFICALLY SHOWN.
   B. CONTRACTOR IS TO ASSUME IN BIDDING THAT 75% OF THE WALL REPAIRS WILL REQUIRE REINFORCING REPLACEMENT LAP SPLICING.
   C. THE UNUSED PORTION OF THE ALLOWANCE SHALL BE CREDITED TO THE OWNER.
2. THE SPALLED AND DELAMINATED CONCRETE SHALL BE COMPLETELY REMOVED. THE CONTRACTOR SHALL TAKE THE NECESSARY PRECAUTIONS, INCLUDING THE USE OF CHIPPING HAMMERS NOT EXCEEDING 15 LBS. IN WEIGHT, TO AVOID DAMAGING THE UNDERLYING SOUND CONCRETE.
3. SPALLED AND DELAMINATED EDGES SHALL BE SQUARED BY GRINDING CONCRETE AT THE PERIMETER BEYOND THE REMOVAL AREA, TO A MINIMUM DEPTH OF 1/2 INCH. AVOID CUTTING ANY EXISTING EMBEDDED STEEL REINFORCING IN THE SLAB OR GIRDER. AT AREAS WHERE CONCRETE COVER IS LESS THAN 1/2 INCH OVER STEEL REINFORCING, THE PERIMETER SHALL BE CAREFULLY GROUND TO A SAFE DEPTH AWAY FROM THE REINFORCING, AND THE REMAINING DEPTH CHIPPED AWAY WITH A LIGHT WEIGHT CHIPPING HAMMER TO SQUARE THE EDGE.
4. ADDITIONAL CONCRETE SHALL BE REMOVED TO THE DEPTH OF THE CUT. ALL EXPOSED SURFACES SHALL BE NEEDLE GUNNED TO REMOVE ALL MATERIALS THAT WOULD INHIBIT BONDING.
5. THE CONTRACTOR SHALL VERIFY WITH THE MATERIAL SUPPLIERS, THE COMPATIBILITY OF ALL PRODUCTS AND PROCEDURES UTILIZED FOR REPAIRS, BEFORE START OF WORK. IF ANY MODIFICATIONS NEED TO BE MADE, IT SHALL BE BROUGHT TO THE IMMEDIATE ATTENTION OF THE CONTRACTING OFFICER PRIOR TO THE START OF ANY WORK.
6. THE FOLLOWING ARE ACCEPTABLE ALTERNATIVES UTILIZED IN THE REPAIR DETAILS, NO OTHER SUBSTITUTIONS WILL BE ACCEPTED:

PRODUCT DESCRIPTION	ACCEPTABLE ALTERNATIVE PRODUCTS
A. FLOWABLE GROUT	• THOROC LA, THORO SYSTEMS • EMACO T-430, MASTER BUILDERS • SET GROUT, MASTER BUILDERS • MASTERFLOW 713, MASTER BUILDERS • MASTERFLOW 928, MASTER BUILDERS • EUCO THINCOAT, EUCLID CHEMICALS • SIKA 222, SIKA CORP.
B. OVERHEAD & VERTICAL PATCH MATERIAL; TROWELABLE	• THOROC HB2 AND HBA, THORO SYSTEMS • THORITE RAPID VERTICAL, THORO SYSTEMS • POLYFAST LPL, DAYTON SUPERIOR • RECRETE-20, DAYTON SUPERIOR • MASTER PATCH 240-CR, MASTER BUILDERS • SIKAREPAIR 223, SIKA CORP. • EUCO VERTICOAT, EUCLID CHEMICAL
C. CAST-IN-PLACE CONCRETE	• CONCRETE PROPERTIES: F'c = 5000 PSI MAX. W/C RATIO = 0.40 3/8" DIAMETER PEA GRAVEL HIGH RANGE WATER REDUCER (MAX. 8-1/2" SLUMP) SHRINKAGE COMPENSATING ADMIXTURE NOTE: PRE-MIXED BAGGED CONCRETE SUCH AS QUIKCRETE (6000PSI) MIX OR SIKAGROUT 212 WITH PEA GRAVEL (25#/55# BAG OF DRY MIX BUT NOT EXCEEDING 25% BY VOLUME) MAY BE USED W/THE ABOVE ADMIXTURES.
D. SHRINKAGE REDUCING ADMIXTURE	• GRACE ECLIPSE 2% BY WEIGHT OF CEMENT; AT 2 GALS. PER YD.
E. SURFACE APPLIED CORROSION INHIBITOR	• GRACE POSTRITE 100 S.F./GALLON

7. PRIOR TO PLACEMENT OF PATCH MATERIAL, THE EXPOSED CONCRETE SHALL BE SATURATED SURFACE DRY WITH NO WATER ACCUMULATION.
8. POLYMER MODIFIED REPAIR MATERIALS SHALL BE APPLIED TO FILL VOIDS. FOR PATCH DEPTHS IN EXCESS OF 1 INCH, 3/8 INCH AGGREGATES SHALL BE ADDED.
9. FOR VERTICAL AND OVERHEAD PATCHES, POLYMER MODIFIED CONCRETE SHALL BE FORMED AND PLACED IN THE PATCH AREA. THE CONCRETE SHALL BE EXTERNALLY AND/OR INTERNALLY VIBRATED AS IT IS PLACED IN THE FORMS TO ACHIEVE THE PROPER CONSOLIDATION TO FILL ALL CORNERS OF THE FORMS; ALLOWING SUFFICIENT SPACE AT THE TOP OF THE FORMED AREA TO PROPERLY PLACE AND CONSOLIDATE THE CONCRETE.
10. FOLLOWING THE INITIAL SET OF THE POLYMER-MODIFIED CONCRETE AT FORMED AREAS, THE SPACE AT THE TOP OF THE PATCH AREA SHALL BE FILLED WITH PATCHING MORTAR.
11. THE SURFACE FINISH SHALL MATCH ADJACENT CONDITIONS.
12. FORMS SHALL BE REMOVED AFTER FIVE DAYS OF CURING. PATCHES SHALL BE INSPECTED FOR IMPROPER CONSOLIDATION OR CRACKING AROUND THE PERIMETER OR IN THE PATCH. IF THESE CONDITIONS EXIST, NOTIFY THE CONTRACTING OFFICER FOR POSSIBLE REMEDIAL ACTION.
13. IN GENERAL, THE FOLLOWING APPLIES TO REPLACING/SUPPLEMENTING CORRODED REBAR:
   A. IF CROSS-SECTIONAL LOSS OF BAR IS LESS THAN 20% AFTER REMOVING ALL CORROSION PRODUCT, THE BAR DOES NOT REQUIRE REPLACEMENT/SUPPLEMENT.
   B. IF CROSS-SECTIONAL LOSS OF BAR IS GREATER THAN 20% AFTER REMOVING ALL CORROSION PRODUCT, REPLACE OR SUPPLEMENT WITH SPLICED BARS.
14. ALL REPLACEMENT REINFORCING STEEL SHALL CONFORM TO ASTM A706 GRADE 60 UNLESS OTHERWISE NOTED ON THE DRAWINGS.
15. ALL REPLACEMENT REINFORCING STEEL SHALL BE LAP SPLICED PER DETAILS SHOWN ON THE DRAWINGS. SPLICES SHALL BE LOCATED AS DETAILED. WHERE LAP OR SPLICE LOCATIONS ARE NOT SPECIFICALLY INDICATED, SPLICES SHALL BE STAGGERED WITH LENGTHS PER THE FOLLOWING:

BAR SIZE	LAP SPLICE LENGTH
#3	21
#4	30
#5	38
#6	48

STRUCTURAL ABBREVIATIONS

A.B.	ANCHOR BOLT	JT.	JOINT
ALT.	ALTERNATE	LLH	LONG LEG HORIZONTAL
APPROX.	APPROXIMATE	LLV	LONG LEG VERTICAL
ARCH.	ARCHITECTURAL	MAX.	MAXIMUM
(B), BOT.	BOTTOM	M.B.	MACHINE BOLT
BLDG.	BUILDING	MECH.	MECHANICAL
BM.	BEAM	MFR.	MANUFACTURER
B.O.F.	BOTTOM OF FOOTING	MIN.	MINIMUM
BTWN.	BETWEEN	(N)	NEW
C.I.P.	CAST-IN-PLACE	MISC.	MISCELLANEOUS
C.J.	CONSTRUCTION JOINT	N.I.C.	NOT IN CONTRACT
℄	CENTERLINE	N.T.S.	NOT TO SCALE
CLR.	CLEAR(ANCE)	o.c.	ON CENTER
CMU	CONCRETE MASONRY UNIT	O.H.	OPPOSITE HAND
COL.	COLUMN	OPG.	OPENING
CONC.	CONCRETE	OPP.	OPPOSITE
CONN.	CONNECTION	PL., ▱	PLATE
C.P.	COMPLETE PENETRATION	PLYWD.	PLYWOOD
CONSTR.	CONSTRUCTION	P.P.	PARTIAL PENETRATION
CONT.	CONTINUOUS	PT.	POINT
DBL.	DOUBLE	R.O.	ROUGH OPENING
DET.	DETAIL	RAD.	RADIUS
DIA., ø	DIAMETER	REINF.	REINFORCED, REINFORCEMENT
DIM.	DIMENSION	REQ'D	REQUIRED
DWG.	DRAWING	SCHED.	SCHEDULE
(E), EXIST.	EXISTING	SECT.	SECTION
EA.	EACH	SHT.	SHEET
E.F.	EACH FACE	SIM.	SIMILAR
E.J.	EXPANSION JOINT	SL.	SLOPE
EL., ELEV.	ELEVATION	SPECS.	SPECIFICATIONS
EQ.	EQUAL	SQ.	SQUARE
E.N.	EDGE NAILING	STD.	STANDARD
E.S.	EACH SIDE	STIFF.	STIFFENER
E.W.	EACH WAY	STRUCT.	STRUCTURAL
EXP.	EXPANSION	(T)	TOP
EXTER.	EXTERIOR	T&B	TOP & BOTTOM
FNDN.	FOUNDATION	T&G	TONGUE & GROOVE
FL.	FLOOR	THRU	THROUGH
F.O.C.	FACE OF CONCRETE	T.O.F.	TOP OF FOOTING
FIN.	FINISH	T.O.S.	TOP OF SLAB, TOP OF STEEL
FTG.	FOOTING	T.O.W.	TOP OF WALL
GA.	GAUGE	TYP.	TYPICAL
GALV.	GALVANIZED	U.O.N.	UNLESS OTHERWISE NOTED
(H), HORIZ.	HORIZONTAL	(V), VERT.	VERTICAL
H.P.	HIGH POINT	W/	WITH
INTER.	INTERIOR	WWF	WELDED WIRE FABRIC

GARY K. CHOCK
LICENSED PROFESSIONAL ENGINEER
No. 5637-S
HAWAII, U.S.A.

This work was prepared by me or under my supervision.

DESIGNED: GC/GJ	SUB SHEET NO.	TITLE OF SHEET	DRAWING NO. 491 / 41,016
DRAWN: DW		GENERAL NOTES	PKG. NO. KALA 2R-S2
TECH. REVIEW:	S0.1	Kalaupapa National Historical Park	SHEET 28 OF 71
DATE: 2/21/03			

29/72

HORIZ. TENSION LAP SPLICE SCHED.				
BAR SIZE	LAP SPLICE LENGTH (INCHES)			
	f'c=3000	f'c=4000	f'c=5000	f'c=6000
3	21	21	21	21
4	30	30	30	30
5	36	36	36	36
6	46	44	44	44
7	63	54	50	50
8	82	71	64	58
9	104	90	81	74
10	132	115	103	94
11	163	141	128	115

3 / S1.1 TYPICAL HORIZONTAL BAR TENSION LAP SPLICE SCHEDULE
NO SCALE

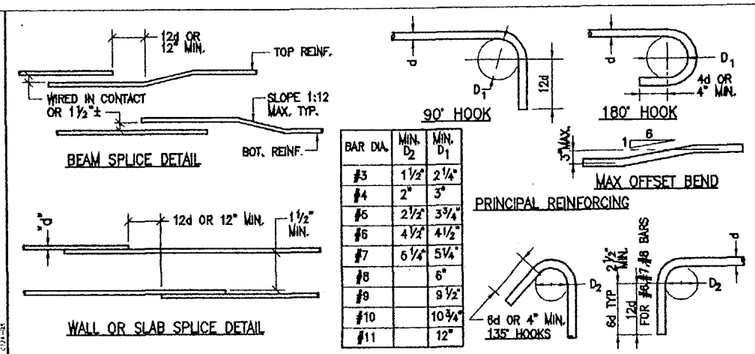

BAR DIA.	MIN. D_2	MIN. D_1
#3	1½"	2¼"
#4	2"	3"
#5	2½"	3¾"
#6	4½"	4½"
#7	6¼"	5¼"
#8		6"
#9		9½"
#10		10¾"
#11		12"

NOTES:
1. ALL BENDS SHALL BE MADE COLD.
2. #14 & #18 BARS SHALL BE BEND-TESTED AND APPROVED PRIOR TO BENDING.

2 / S1.1 TYPICAL BAR BEND AND LAP DETAILS
NO SCALE

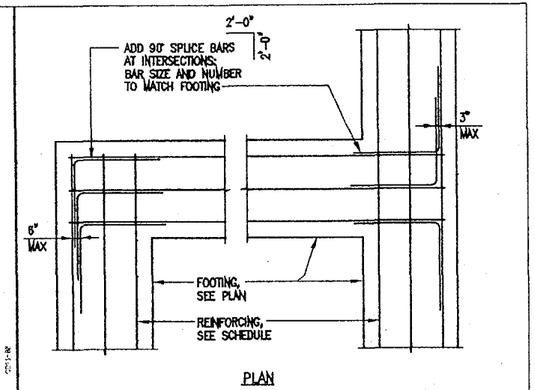

1 / S1.1 TYP. FOOTING REINFORCING @ INTERSECTIONS
NO SCALE

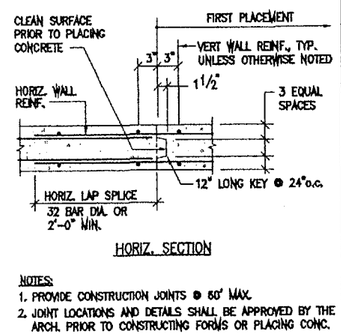

NOTES:
1. PROVIDE CONSTRUCTION JOINTS @ 60' MAX.
2. JOINT LOCATIONS AND DETAILS SHALL BE APPROVED BY THE ARCH. PRIOR TO CONSTRUCTING FORMS OR PLACING CONC.

8 / S1.1 TYPICAL CONCRETE WALL VERT. CONSTR. JOINT DETAIL
NO SCALE

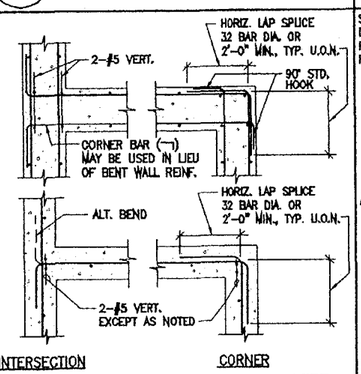

7 / S1.1 TYPICAL DETAILS AT CONCRETE WALL REINF. AT INTERSECTIONS
NO SCALE

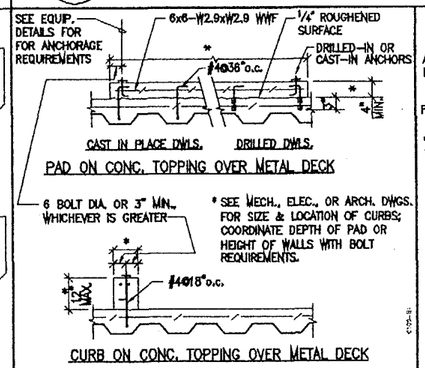

6 / S1.1 TYPICAL CONCRETE EQUIPMENT SUPPORT DETAILS
NO SCALE

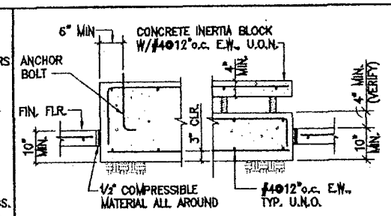

NOTES:
1. USE FOR EQUIPMENT NEEDING VIBRATION ISOLATION.
2. SEE MECHANICAL AND ELECTRICAL DRAWINGS FOR THE FOLLOWING:
   a. LOCATION AND DIMENSIONS OF PADS AND BASES
   b. DETAILS OF SUPPORTS AND ISOLATORS.
   c. LOCATION AND SIZE OF ANCHOR BOLTS.

5 / S1.1 TYPICAL DETAILS AT CONCRETE BASE & SLAB FOR EQUIPMENT
NO SCALE

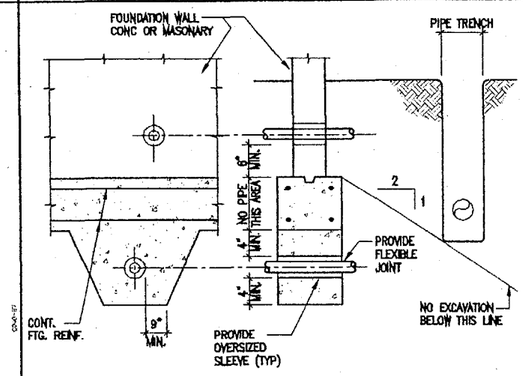

4 / S1.1 PIPE AT OR ADJACENT TO FOOTING
NO SCALE

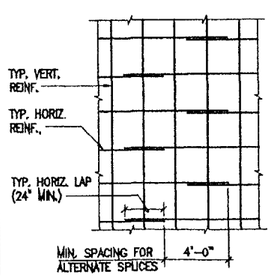

NOTE:
FOR REINF. SIZE & SPACING, SEE SCHED. 12

13 / S1.1 TYPICAL DETAIL AT CONC. WALL VERT. & HORIZ. REINFORCING
NO SCALE

CONCRETE WALL REINFORCING SCHEDULE			
WALL THICKNESS	BAR SIZE & SPACING EACH MAT fy = 60KSI		REMARKS
	HORIZ.	VERT.	
4" TO 5"	#4 @ 12"	#4 @ 12"	SINGLE MAT
5½" TO 6"	#4 @ 12"	#4 @ 16"	SINGLE MAT
6½" TO 8"	#4 @ 12"	#4 @ 12"	SINGLE MAT
8½" TO 10"	#4 @ 18"	#4 @ 18"	DOUBLE MAT
10½" TO 12"	#4 @ 16"	#4 @ 18"	DOUBLE MAT

NOTES:
1. THE ABOVE SCHEDULE INDICATES MIN. REINFORCING FOR ALL CONCRETE WALLS, AND FOR SLABS OF PITS AND TRENCHES.
2. WALL REINFORCING SHOWN IN DETAILS SHALL GOVERN OVER THE ABOVE MINIMUM REINFORCING.
3. SINGLE MAT REINFORCING SHALL BE CENTERED IN WALLS UNLESS OTHERWISE INDICATED.

12 / S1.1 TYPICAL CONCRETE WALL MINIMUM REINFORCING SCHEDULE
NO SCALE

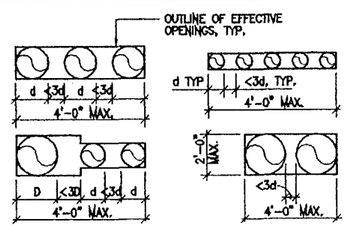

NOTES:
1. ALL ABOVE CONDITIONS REQUIRE 1-#5 TOP AND BOTTOM TRIM BARS ALL AROUND THE EFFECTIVE OPENING WITH 1'-0" MINIMUM EMBEDMENT PAST THE OPENING EDGE.
2. IF THE EFFECTIVE LENGTH OF AN OPENING IS GREATER THAN 2'-0", FOLLOW THE TRIM REQUIREMENTS CALLED OUT ON THE APPROPRIATE DETAIL.

11 / S1.1 TYP. DETAILS AT SLAB & WALL OPENINGS FOR MULTIPLE PIPES
NO SCALE

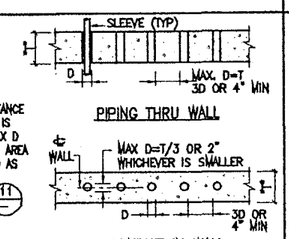

NOTE:
WHERE CLEAR DISTANCE BETWEEN SLEEVES IS IMPOSSIBLE OR MAX D IS EXCEEDED, THIS AREA SHALL BE TREATED AS AN OPENING PER TYPICAL DETAIL 11

10 / S1.1 TYPICAL PIPING AND CONDUIT DETAILS IN OR THRU CONC. WALL
NO SCALE

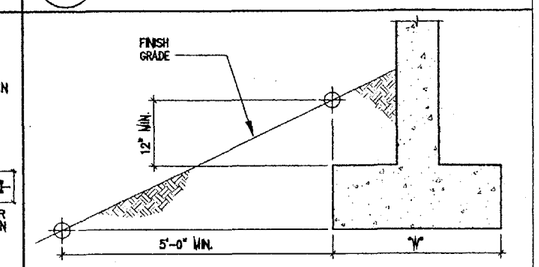

9 / S1.1 TYPICAL FOOTING LOCATION @ SLOPE
NO SCALE

GARY Y.K. CHOCK
LICENSED PROFESSIONAL ENGINEER
No. 5657-S
HAWAII, U.S.A.
This work was prepared by me or under my supervision.

DESIGNED: GC/GJ	SUB SHEET NO.	TITLE OF SHEET	DRAWING NO. 491 41,016
DRAWN: DW	S1.1	CURATORIAL FACILITY TYPICAL DETAILS Kalaupapa National Historical Park	PKG. NO. KALA 211-5
TECH. REVIEW:			SHEET 29 OF 71
DATE: 2/21/03			

30/72

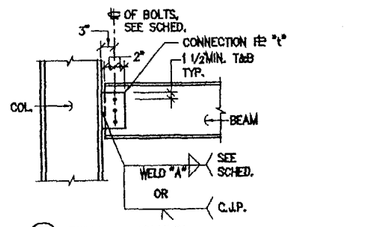

(A) BEAM TO COLUMN

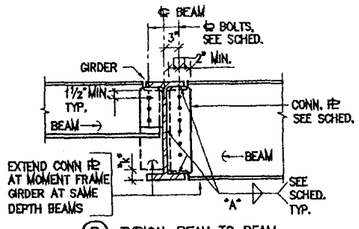

(B) TYPICAL BEAM TO BEAM

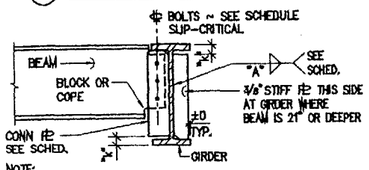

NOTE:
ONE SIDED CONN. OCCURS WHERE OPPOSITE BEAMS ARE OFFSET BY 12" OR MORE.

(C) ONE SIDE BEAM CONNECTION

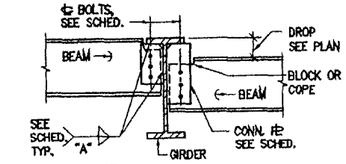

(D) DROPPED BEAM

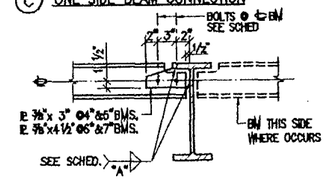

(E) BEAM 4" TO 7"

TYPICAL STEEL BEAM CONN. SCHEDULE			
MEMBER (DEPTH)	# OF BOLTS 1"ø A325	CONN PL "t"	WELD SIZE "A"
< 8"	2	1/4"	1/4"
8" – 10"	2	3/8"	1/4"
12" – 14"	3	3/8"	5/16"
16"	4	3/8"	5/16"

NOTES:
1. FILLET WELD SIZE SHALL BE AS SHOWN UNLESS A GREATER SIZE IS REQUIRED BY A.I.S.C. TABLE 1.17. 2A.
2. ALL BOLTS SHALL BE 1"ø A325-N, TYP. U.O.N.

6 / S1.2 TYPICAL STEEL BEAM CONNECTION DETAILS
NO SCALE

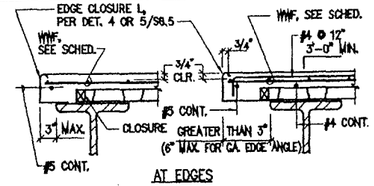

AT EDGES

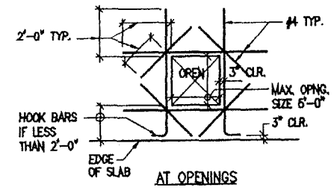

AT OPENINGS

3 / S1.2 TYPICAL INTERIOR SLAB EDGE AND REINFORCING DETAILS
NO SCALE

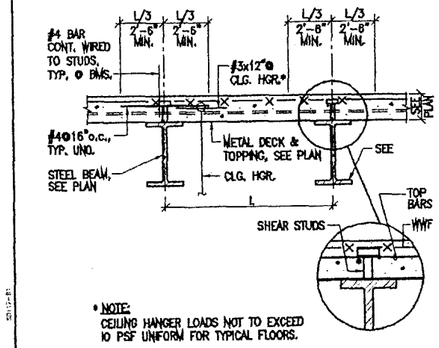

* NOTE:
CEILING HANGER LOADS NOT TO EXCEED 10 PSF UNIFORM FOR TYPICAL FLOORS.

2 / S1.2 TYPICAL REINFORCING DETAILS AT DECK PERPENDICULAR TO BEAM
NO SCALE

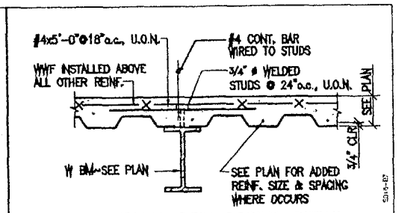

1 / S1.2 TYPICAL REINFORCING DETAIL AT DECK PARALLEL TO BEAM
NO SCALE

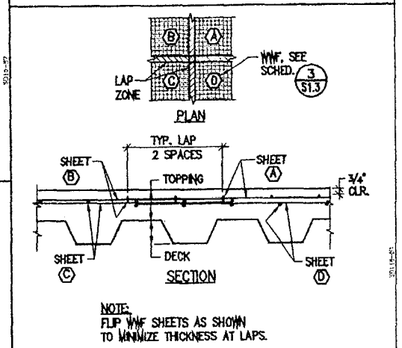

NOTE:
FLIP WWF SHEETS AS SHOWN TO MINIMIZE THICKNESS AT LAPS.

4 / S1.2 TYP. WELDED WIRE FABRIC LAP DETAILS
NO SCALE

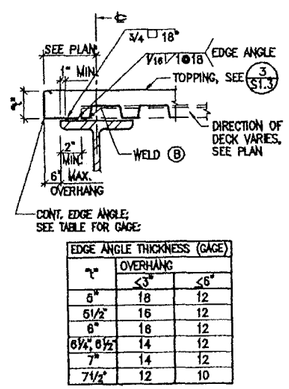

EDGE ANGLE THICKNESS (GAGE)		
"t"	OVERHANG ≤3"	OVERHANG ≤6"
6"	18	12
6 1/2"	16	12
6"	16	12
6 1/4", 6 1/2"	14	12
7"	14	12
7 1/2"	12	10

8 / S1.2 TYP. DET. @ SLAB EDGE (6" OR LESS)
NO SCALE

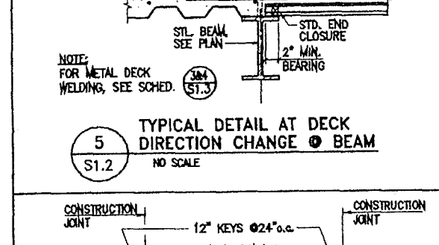

NOTE:
FOR METAL DECK WELDING, SEE SCHED. 3M4/S1.3

5 / S1.2 TYPICAL DETAIL AT DECK DIRECTION CHANGE @ BEAM
NO SCALE

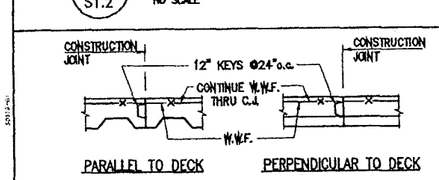

7 / S1.2 TYPICAL CONSTRUCTION JOINT DETAILS FOR CONC. TOPPING OVER METAL DECK
NO SCALE

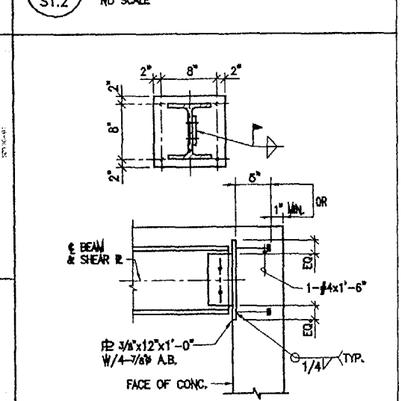

9 / S1.2 TYPICAL CONN. DETAILS AT STL. BEAM TO CONCRETE PIER
NO SCALE

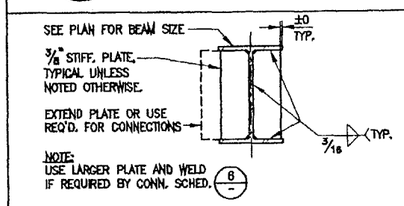

NOTE:
USE LARGER PLATE AND WELD IF REQUIRED BY CONN. SCHED. 6/-

11 / S1.2 TYPICAL STIFFENER PLATE DETAIL
NO SCALE

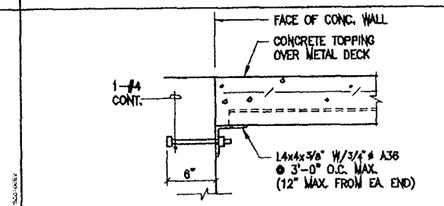

10 / S1.2 TYPICAL LEDGER ANGLE DETAIL
NO SCALE

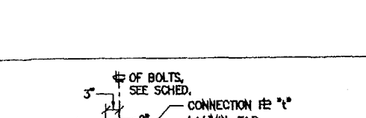

(A) FLANGE COPE AT SIMPLE CONN.

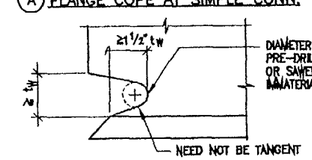

(B) FLANGE CUT AT MOMENT CONN.

NOTE:
TOP & BOT. FLANGE CONNECTIONS SIMILAR.

13 / S1.2 TYPICAL ACCESS HOLE DETAIL
NO SCALE

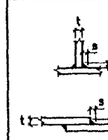

TYPICAL FILLET WELD SIZE (U.O.N.)		
	t	s
	UP TO 5/16"	1/4"
	UP TO 3/8"	5/16"
	UP TO 1/2"	3/8"
	UP TO 3/4"	7/16"
	UP TO 7/8"	1/2"

12 / S1.2 TYPICAL FILLET WELD SIZES
NO SCALE

GARY K. CHUCK LICENSED PROFESSIONAL ENGINEER No. 5457-S HAWAII, U.S.A.
This work was prepared by me or under my supervision.

DESIGNED: GC/GJ	SUB SHEET NO.	TITLE OF SHEET	DRAWING NO. 491 / 41,016
DRAWN: DW		CURATORIAL FACILITY	PKG. NO. KALA 2L1-5
TECH. REVIEW:		TYPICAL DETAILS	SHEET 30
DATE: 1/21/03	S1.2	Kaloupapa National Historical Park	OF 71

31/72

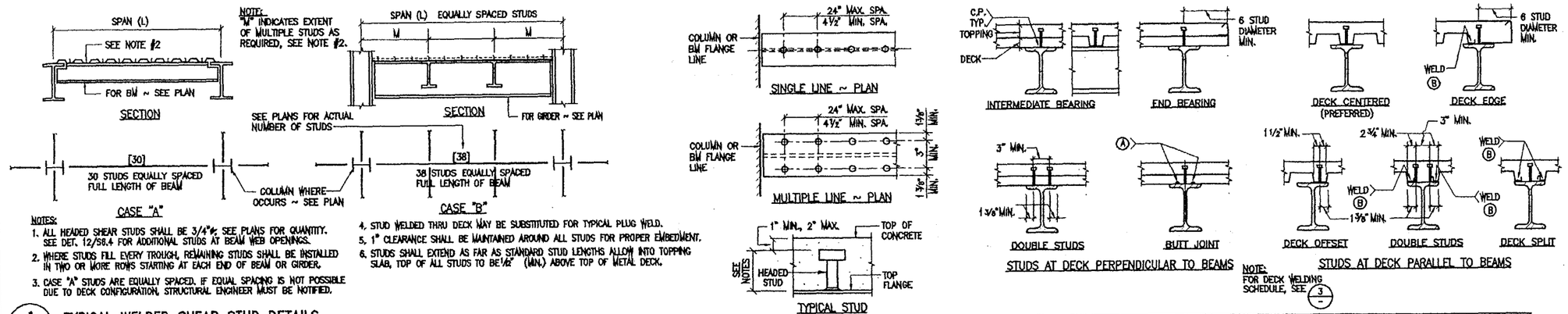

NOTES:
1. ALL HEADED SHEAR STUDS SHALL BE 3/4"ø; SEE PLANS FOR QUANTITY. SEE DET. 12/S8.4 FOR ADDITIONAL STUDS AT BEAM WEB OPENINGS.
2. WHERE STUDS FILL EVERY TROUGH, REMAINING STUDS SHALL BE INSTALLED IN TWO OR MORE ROWS STARTING AT EACH END OF BEAM OR GIRDER.
3. CASE "A" STUDS ARE EQUALLY SPACED. IF EQUAL SPACING IS NOT POSSIBLE DUE TO DECK CONFIGURATION, STRUCTURAL ENGINEER MUST BE NOTIFIED.
4. STUD WELDED THRU DECK MAY BE SUBSTITUTED FOR TYPICAL PLUG WELD.
5. 1" CLEARANCE SHALL BE MAINTAINED AROUND ALL STUDS FOR PROPER EMBEDMENT.
6. STUDS SHALL EXTEND AS FAR AS STANDARD STUD LENGTHS ALLOW INTO TOPPING SLAB, TOP OF ALL STUDS TO BE 1/2" (MIN.) ABOVE TOP OF METAL DECK.

1 / S1.3 TYPICAL WELDED SHEAR STUD DETAILS
NO SCALE

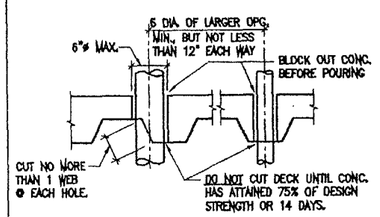

NOTE: IF OPENINGS ARE CLOSER TOGETHER, OR LARGER THAN SHOWN, DECK MUST BE REINFORCED. SEE 7/- AND OTHER DETAILS.

6 / S1.3 TYP. DETAIL AT SMALL UNREINFORCED DECK OPENING (UP TO 6" MAX.)
NO SCALE

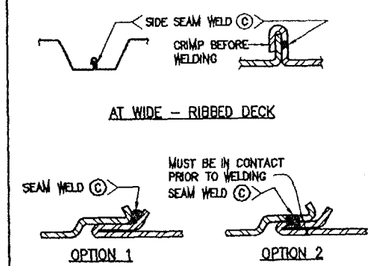

NOTE: SEE METAL DECK WELDING SCHED. 3/-

5 / S1.3 TYPICAL METAL DECK SIDE SEAM WELD DETAILS
NO SCALE

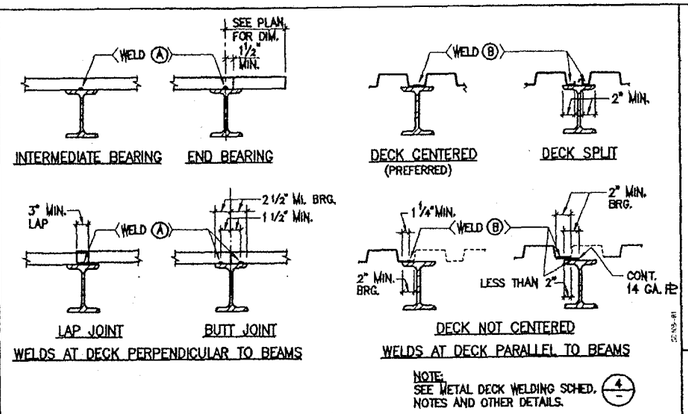

NOTE: SEE METAL DECK WELDING SCHED. 4/- NOTES AND OTHER DETAILS.

4 / S1.3 TYPICAL METAL DECK TO STEEL BEAM WELD DETAILS
NO SCALE

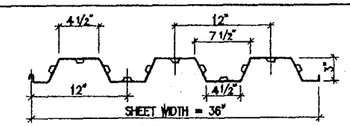

TYPE "A" DECK PROFILE

METAL DECK SECTION PROPERTIES				
SECTION TYPE	THICKNESS (GA.)	I (IN 4/FT)	S (IN 3/FT)	DECK EMBOSSED (COMPOSITE)
"A"	20	0.896	0.534	YES

2 / S1.3 METAL DECK PROFILE AND SECTION PROPERTIES
NO SCALE

METAL DECK WELD AND TOPPING SCHEDULE									
METAL DECK 2/-	DECK WELDS, SEE 4/- AND 5/-							TOPPING THICKNESS ABOVE DECK	TOPPING REINF.
	WELD (A)		WELD (B)		WELD (C)				
	SIZE	# PER SHEET	SIZE	SPACING	SIZE	SPACING			
TYPE "A"	3/4"ø	4	3/4"ø	24"	1 1/2"	24"		3"	6x6–W1.4 xW1.4

3 / S1.3 METAL DECK WELD AND TOPPING SCHEDULE
NO SCALE

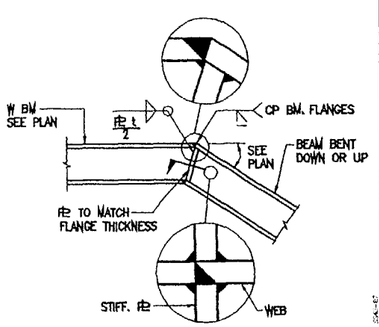

9 / S1.3 TYPICAL CONNECTION DETAIL AT BENT BEAM
NO SCALE

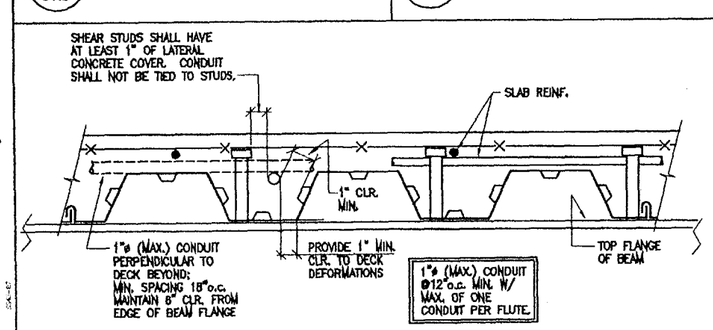

8 / S1.3 TYPICAL DETAIL AT CONDUIT IN METAL DECK
NO SCALE

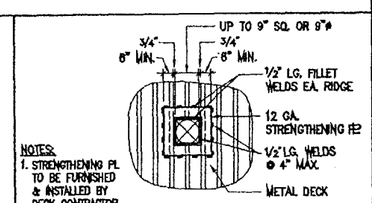

NOTES:
1. STRENGTHENING PL TO BE FURNISHED & INSTALLED BY DECK CONTRACTOR.
2. AT OPGS. FOR MULTIPLE PIPES, SEE 11/S12

7 / S1.3 TYP. DETAIL @ SMALL REINF. DECK OPG. (UP TO 12" MAX.)
N.T.S.

GARY Y.K. CHOCK — LICENSED PROFESSIONAL ENGINEER — No. 5857-S — HAWAII, U.S.A.

This work was prepared by me or under my supervision.

DESIGNED: GC/GJ	SUB SHEET NO.	TITLE OF SHEET	DRAWING NO. 491 / 41,016
DRAWN: DW		CURATORIAL FACILITY — TYPICAL DETAILS — Kalaupapa National Historical Park	PKG. NO. KALA 211-5
TECH. REVIEW:	S1.3		SHEET 31 OF 71
DATE: 2/21/03			

32/72

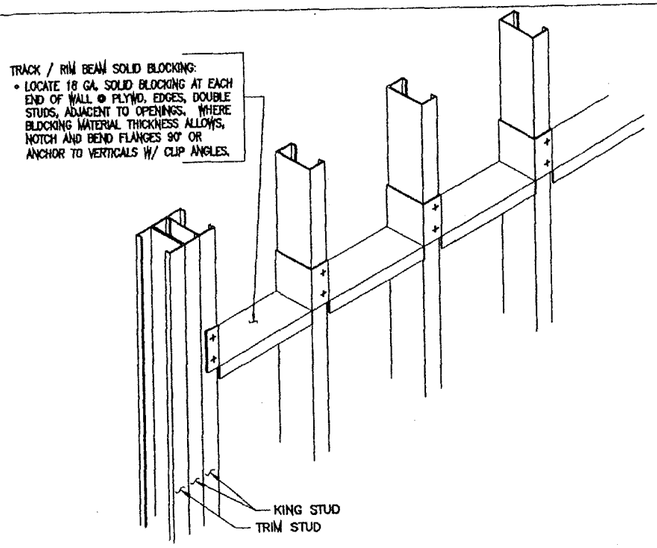

2 / S1.4 TYPICAL WALL BLOCKING DETAIL

NO SCALE

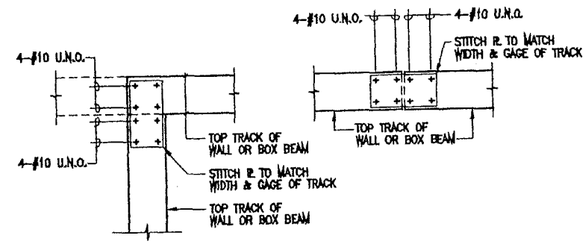

CONDITION @ 90° CORNER OR T-INTERSECTION

CONDITION @ STRAIGHT RUN

1 / S1.4 WALL TOP TRACK SPLICE PLATE DETAIL

NO SCALE

LIGHT GAUGE FRAMING NOTES:

1. LIGHT GAUGE, COLD FORMED STEEL MEMBERS ARE TO BE MANUFACTURED BY A MEMBER OF THE METAL STUD MANUFACTURERS ASSOCIATION (MSMA). ALL MEMBERS ARE DESIGNATED PER MSMA STANDARDS.
2. MEMBERS ARE TO COMPLY WITH ICBO ER EVALUATION REPORT NO. 4943.
3. ALL MEMBERS ARE TO BE GALVANIZED IN ACCORDANCE WITH ASTM A525.
4. GALVANIZED STEEL IS TO MEET REQUIREMENTS OF:
   12 GAUGE ..... ASTM A446 GRADE D (Fy = 50 KSI)
   14 AND 16 GAUGE ..... ASTM A446 GRADE D (Fy = 50 KSI)
   18 AND 20 GAUGE ..... ASTM A446 GRADE A (Fy = 33 KSI)
5. ALL MEMBERS ARE TO BE DESIGNED IN ACCORDANCE WITH THE PROVISIONS OF THE "SPECIFICATION FOR THE DESIGN OF COLD-FORMED STEEL STRUCTURAL MEMBERS" 1986 EDITION, WITH 1989 AMENDMENTS OF THE AMERICAN IRON AND STEEL INSTITUTE (AISI).
6. MEMBERS SHALL BE VISUALLY CHECKED FOR CRACKS IN THE STEEL AT BENDS. MEMBERS WITH CRACKS SHALL NOT BE USED FOR STRUCTURAL FRAMING. MEMBERS WITH SURFACE RUST ON THE GALVANIZED FINISH AND/OR SCALING RUST ON THE CUT ENDS SHALL NOT BE USED FOR STRUCTURAL FRAMING.
7. PROVIDE FULL HEIGHT, SQUARE CUT, FULL CONTACT BEARING WEB STIFFENERS, OF THE SAME THICKNESS AND DEPTH AS THE FRAMING MEMBER AT EACH REACTION POINTS AND/OR AT POINTS OF CONCENTRATED LOADS.
8. PROVIDE END BLOCKING WHERE JOIST END IS NOT RESTRAINED FROM ROTATION.
9. SPLICES IN FRAMING MEMBERS SHALL NOT BE PERMITTED.
10. ALL WALL STUDS SHALL HAVE MSMA STANDARD PUNCHOUTS AT 24" SPACING, UNLESS OTHERWISE NOTED.
11. FLAME CUTTING OF THE ENDS OF LOAD-BEARING STUDS SHALL NOT BE PERMITTED.
12. ALL DOUBLE STUDS SHALL BE SOLID BLOCKED AT MID-HEIGHT.
13. DO NOT CUT ANY SHEARWALL STUDS, TRACKS, STRAPS, ETC., WITHOUT WRITTEN AUTUTHORIZATION FROM ARCHITECT/ENGINEER.

NOTES:
1. FLANGES SHALL NOT BE NOTCHED OR CUT.
2. CAPACITY VERIFICATION BY DESIGN IS REQUIRED FOR ANY OPENINGS LOCATED AT CONCENTRATED LOADS AND BEARING ENDS.
3. TRACKS FOR STRUCTURAL WALLS (BUT NOT SHEARWALLS):
   A. MINIMIZE ANY CUTTING OR PENETRATING OF TRACKS OF SHEARWALLS. CUTTING OR PENETRATIONS IN SHEARWALL TRACKS MUST BE REQUESTED AND APPROVED IN WRITING FROM THE STRUCTURAL ENGINEER BEFORE ALLOWED IN THE FIELD.
   B. STRENGTHENING OF ANY CUTS OR PENETRATIONS MUST BE EVALUATED ON A CASE BY CASE BASIS.

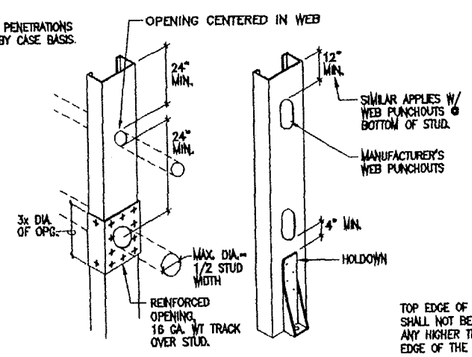

NOTE:
DO NOT PENETRATE ANY BOUNDARY (JAMB) STUDS OR SHEARWALLS (OTHER STUDS OKAY)

STUDS

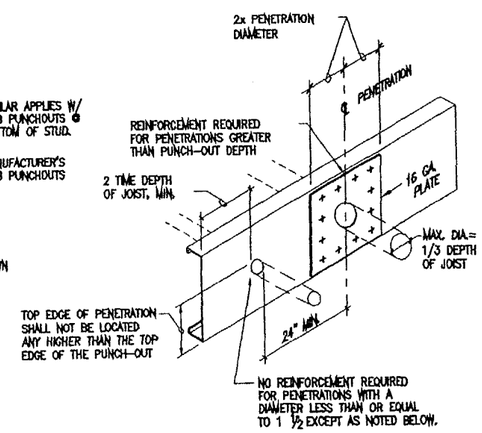

JOISTS OR RAFTERS

4 / S1.4 TYPICAL DETAIL @ JOIST, STUD OR RAFTER WEB PENETRATIONS

NO SCALE

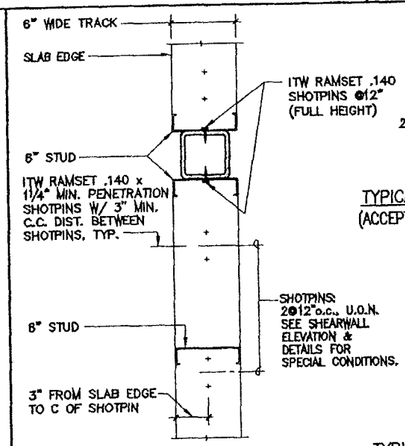

TYPICAL SLAB EDGE CONDITION
(@ 6" STUD WALLS)

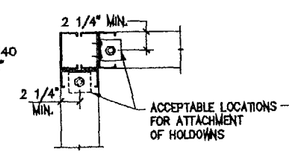

TYPICAL CORNER CONDITION
(ACCEPTABLE HOLDOWN LOCATIONS)

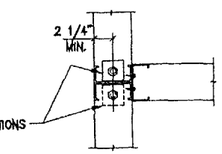

TYPICAL INTERSECTION CONDITION
(ACCEPTABLE HOLDOWN LOCATIONS)

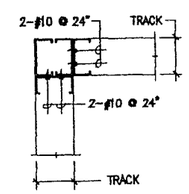

TYPICAL CORNER FRAMING
(STUD TO STUD ATTACHMENT)

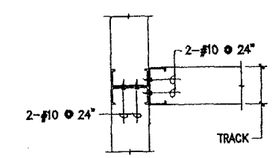

TYPICAL INTERSECTION FRAMING
(STUD TO STUD ATTACHMENT)

3 / S1.4 TYPICAL WALL FRAMING DETAILS (PLAN VIEW)

NO SCALE

GARY Y.K. CHOCK
LICENSED PROFESSIONAL ENGINEER
No. 5657-S
HAWAII, U.S.A.
This work was prepared by me or under my supervision.

DESIGNED: GC/GJ	SUB SHEET NO.	TITLE OF SHEET	DRAWING NO. 491 / 41,016
DRAWN: DW		CURATORIAL FACILITY TYPICAL DETAILS	PKG. NO. KALA 211-2
TECH. REVIEW:	S1.4	Kalaupapa National Historical Park	SHEET 32 OF 71
DATE: 2/20/03			

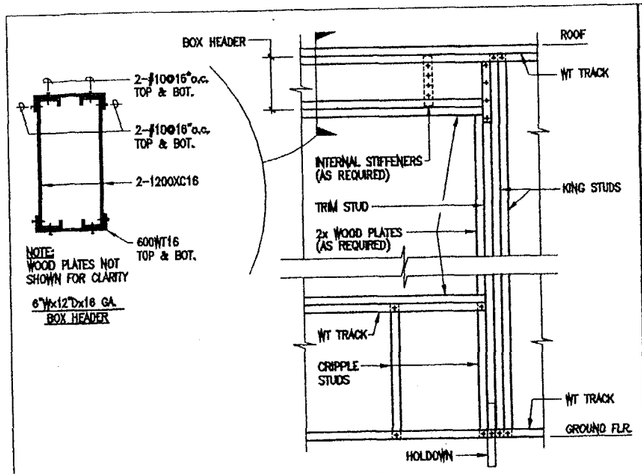

2 / S1.5 TYPICAL FRAMING ELEVATION AT EXTERIOR/BEARING WALL OPENINGS

NO SCALE

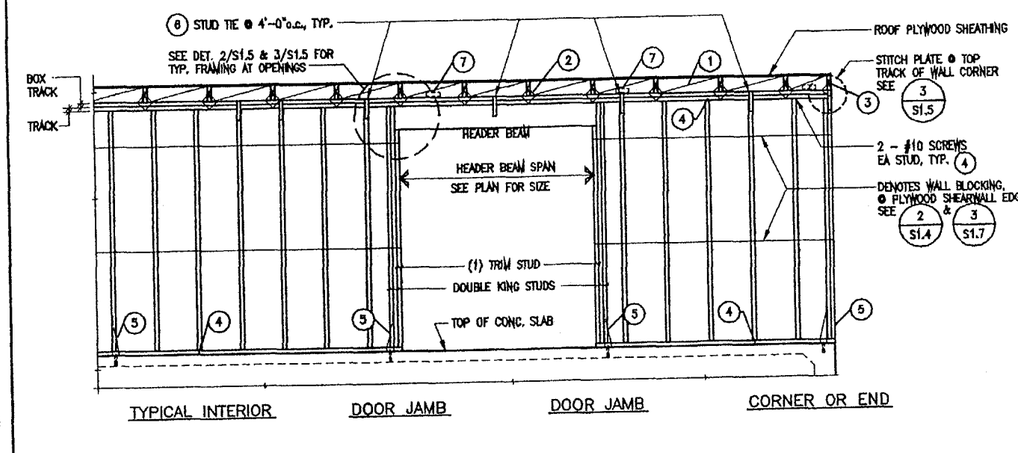

HARDWARE LEGEND: USE SIMPSON OR APPROVED EQUAL

1. 2x BLOCKING
2. H10 AT EACH TRUSS OR RAFTER.
3. 6-#10 SCREWS TOTAL AT CORNER (2-#10 SCREWS AT EA STUD).
4. 2 - #10 SCREWS AT EA STUD.
5. HOLDOWNS AS NOTED ON ELEVATIONS AND/OR PLANS. DISTANCE BETWEEN ANY TWO HOLDOWNS SHALL NOT EXCEED 24'-0±, U.N.O. ALL KING STUDS REQUIRE HOLDOWNS. INSTALL HOLDOWNS @ ENDS & CORNERS OF WALLS.
6. STUD TIES TO CONNECT BOX TRACK TOP PLATE TO STUD (48"o.c. MAX., U.O.N.), SEE 4/S1.7.
7. A35 @ 4'-0"o.c. ON "INSIDE" OF BLOCKING. CONNECT BLOCKING TO BOX TRACK / TOP PLATE.

NOTE: FOR TYPICAL WALL OPENING DETAILS AT EXTERIOR/BEARING WALLS, SEE DETAILS 2/S1.5.

NOTE: ALL SCREWS SHALL HAVE A MINIMUM SPACING EDGE AND END DISTANCE OF 3/4"

1 / S1.5 TYPICAL EXTERIOR WALL FRAMING DETAILS (METAL STUDS/METAL JOISTS/TIMBER ROOF TRUSSES)

NO SCALE

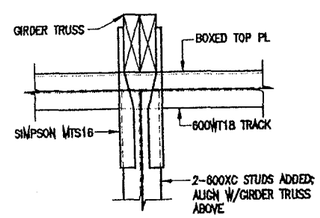

5 / S1.5 TYP. CONNECTION DETAIL

NO SCALE

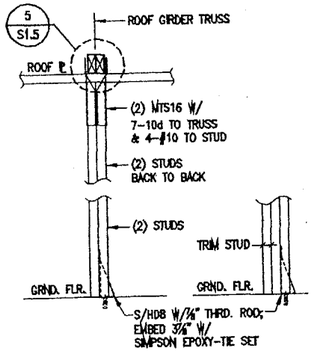

4 / S1.5 TYPICAL CONNECTION DETAILS

NO SCALE

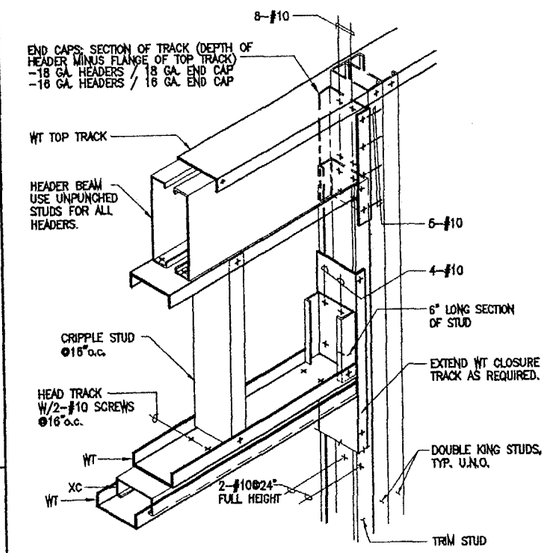

3 / S1.5 LOAD BEARING JAMB & HEAD DETAIL

NO SCALE

GARY Y.K. CHOCK
LICENSED PROFESSIONAL ENGINEER
No. 5657-S
HAWAII, U.S.A.
This work was prepared by me or under my supervision.

DESIGNED: GC/GJ	SUB SHEET NO.	TITLE OF SHEET	DRAWING NO. 491 / 41,016
DRAWN: DW		CURATORIAL FACILITY	PKG. NO. KALA 21L-S
TECH. REVIEW:	S1.5	TYPICAL DETAILS	SHEET 33 OF 71
DATE: 2/21/03		Kalaupapa National Historical Park	

34/72

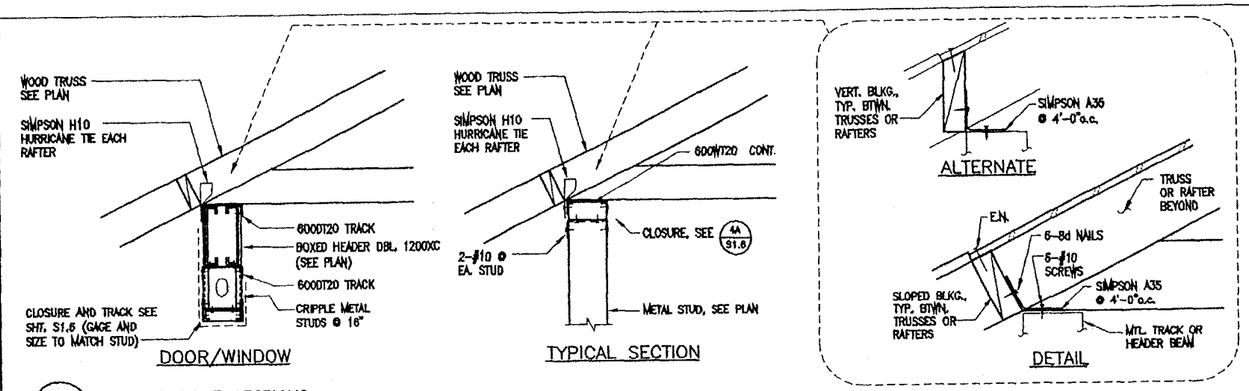

2 S1.6 TYPICAL ROOF SECTIONS
NO SCALE

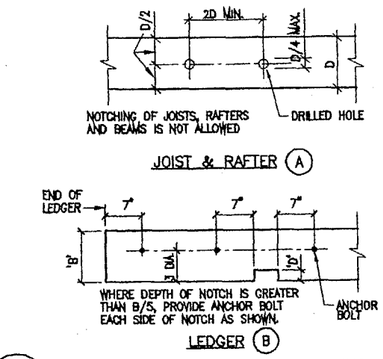

1 S1.6 WOOD FRAMING: HOLES & NOTCHING DETAILS
NO SCALE

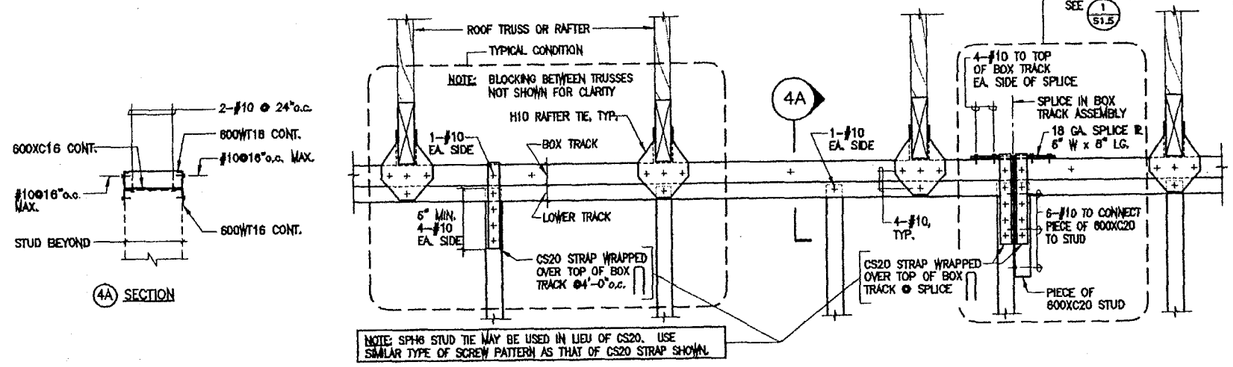

4 S1.6 BOX TRACK ROOF PLATE ASSEMBLY / PARTIAL ELEVATION
NO SCALE

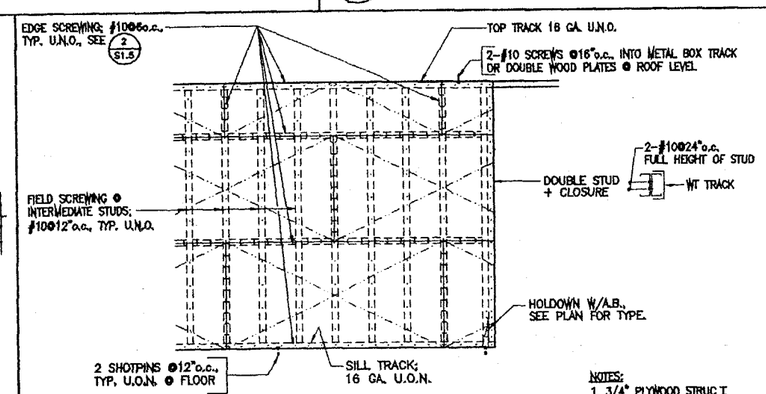

NOTES:
1. 3/4" PLYWOOD STRUC I
2. PLACE PLYWOOD HORIZONTALLY.

3 S1.6 PLYWOOD SHEARWALL ELEVATION
NO SCALE

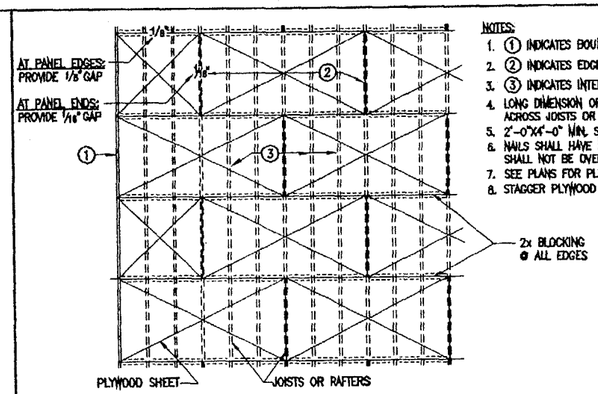

NOTES:
1. (1) INDICATES BOUNDARY NAILING (10@6")
2. (2) INDICATES EDGE NAILING (10@6")
3. (3) INDICATES INTERMEDIATE NAILING (10@12")
4. LONG DIMENSION OF PLYWOOD SHALL RUN ACROSS JOISTS OR RAFTERS.
5. 2'-0"X4'-0" MIN. SIZE OF PLYWOOD SHEET.
6. NAILS SHALL HAVE MIN. 3/8" EDGE DISTANCE & SHALL NOT BE OVER- DRIVEN THRU OUTER FACE.
7. SEE PLANS FOR PLYWOOD THICKNESS AND TYPE.
8. STAGGER PLYWOOD END JOINTS.

6 S1.6 PLYWOOD SHEATHING LAYOUT & NAILING AT FLOOR AND ROOF
NO SCALE

JOIST HANGER SCHEDULE

SUPPORTED JOIST	HANGER (SIMPSON)
2 x 4	LUS24
2 x 6	LUS26
2 x 8	LUS28
2 x 10	LUS210
2 x 12	LUS212
2- 2 x 12	HLUS212-2
4 x 12	HUS412TF

5 S1.6 JOIST HANGER SCHEDULE
NO SCALE

GARY Y.K. CHOCK
LICENSED PROFESSIONAL ENGINEER
No. 5657-S
HAWAII, U.S.A.
This work was prepared by me or under my supervision.

DESIGNED: GC/GJ	SUB SHEET NO.	TITLE OF SHEET	DRAWING NO. 491 / 41,016
DRAWN: DW		CURATORIAL FACILITY TYPICAL DETAILS Kalaupapa National Historical Park	PKG. NO. KALA 311-5 / SHEET 34 OF 71
TECH. REVIEW:	S1.6		
DATE: 2/21/03			

35/72

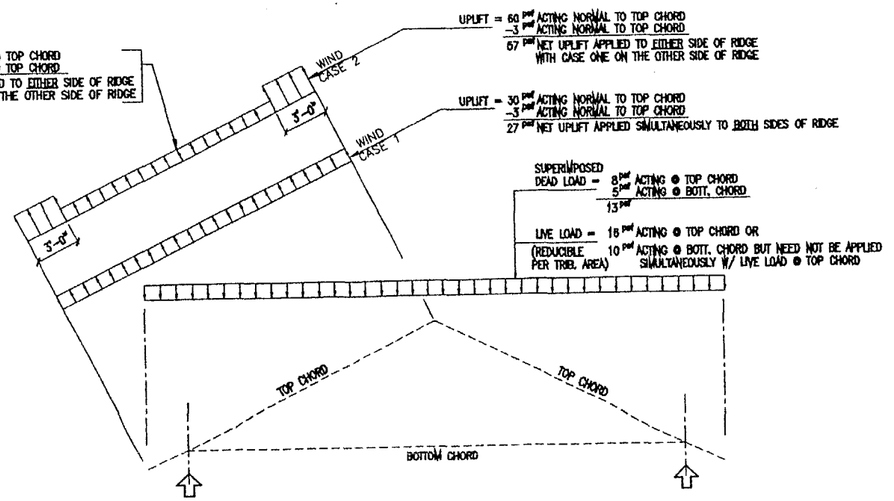

2 / S1.7 PRE-ENGINEERED WOOD ROOF TRUSS LOAD CRITERIA FOR T-1
N.T.S.

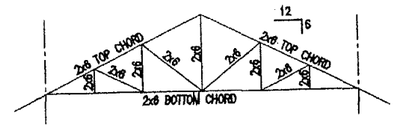

TRUSS T-1

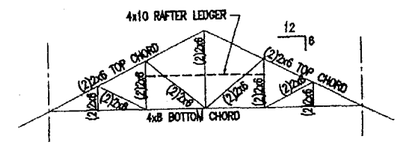

DOUBLE-TRUSS GT-1

1 / S1.7 TRUSS ELEVATIONS
N.T.S.

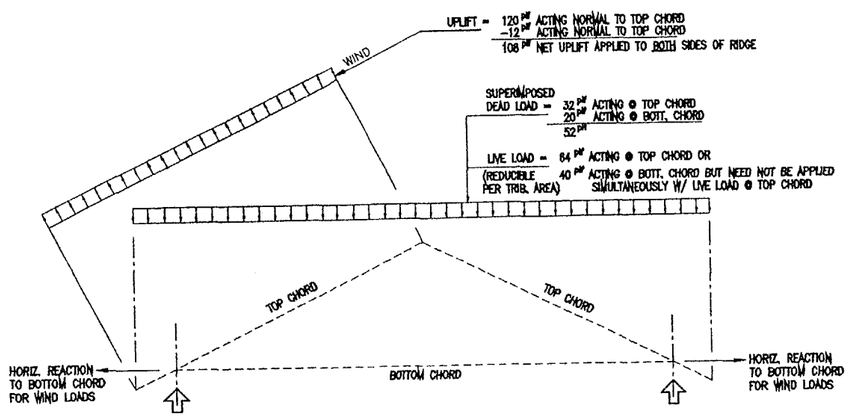

3 / S1.7 PRE-ENGINEERED WOOD ROOF TRUSS LOAD CRITERIA FOR GT-1
N.T.S.

PRE-ENGINEERED WOOD ROOF TRUSS NOTES:

1. PRE-ENGINEERED TRUSSES SHALL BE MANUFACTURED & ERECTED IN ACCORDANCE WITH TPI-85, THE DESIGN SPECIFICATION FOR LIGHT METAL PLATE CONNECTED WOOD TRUSSES, BY THE TRUSS PLATE INSTITUTE.

2. ALL TRUSSES SHALL BE DESIGNED TO THE LOADING CRITERIA SHOWN ON THIS SHEET. ALL LOADS INDICATED ARE APPLIED LOADS; DESIGN MUST ALSO INCLUDE TRUSS SELF WEIGHT.

   THE TRUSS MANUFACTURER SHALL SUBMIT STRUCTURAL CALCULATIONS, STAMPED BY A STRUCTURAL ENGINEER LICENSED IN THE STATE OF HAWAII, THAT VERIFY THE ADEQUACY OF THE DESIGN FOR THE LOADS SHOWN ON THIS SHEET.

   THE DESIGN OF ALL TRUSSES DESIGNATED "GT-1" SHALL INCLUDE THE CONCENTRATED REACTIONS FROM ALL MEMBERS FRAMING INTO THE TRUSS. DESIGN SHALL ALSO ACCOUNT FOR 5/8"ø BOLT HOLES FOR HIP BEAM CONNECTIONS.

   THE 10 psf CEILING LIVE LOAD NEED NOT BE APPLIED SIMULTANEOUSLY WITH THE 16 psf ROOF LIVE LOAD.

   THE NET UPLIFT LOADS INCLUDE A REDUCED DEAD LOAD & SHALL NOT BE APPLIED SIMULTANEOUSLY WITH THE ROOF DEAD & LIVE LOADS. CASE 1 & CASE 2 NEED NOT BE APPLIED SIMULTANEOUSLY.

3. THE TRUSS MANUFACTURER SHALL SUBMIT SHOP DRAWINGS & CALCULATIONS, STAMPED BY A STRUCTURAL ENGINEER LICENSED IN THE STATE OF HAWAII, FOR REVIEW BY THE STRUCTURAL ENGINEER OF RECORD. FABRICATE TRUSSES ONLY FROM APPROVED SHOP DRAWINGS. THE SHOP DRAWINGS SHALL INCLUDE:

   a. PLAN LAYOUT OF MEMBERS, WITH INSTALLATION INSTRUCTIONS.

   b. LATERAL BRACING REQUIREMENTS FOR CHORD & WEB MEMBERS OF ALL TRUSSES. LATERAL BRACING TO ACCOUNT FOR ALL GRAVITY, WIND, SEISMIC, AND TEMPORARY ERECTION LOADS AND CONDITIONS.

   c. DETAILS OF JOINTS & CONNECTIONS.

   d. DESIGN, FINAL GEOMETRY, AND EXACT LOCATION OF TRUSSES SHALL BE COORDINATED WITH MECHANICAL SUBCONTRACTOR TO AVOID INTERFERENCE WITH MECHANICAL DUCTS.

4. CONTRACTOR SHALL BE RESPONSIBLE TO PROVIDE AND INSTALL ALL LATERAL BRACING MEMBERS AND CONNECTIONS (FROM TRUSSES TO BUILDING) FOR LATERAL BRACING.

5. PROVIDE 2x4 FLAT CONTINUOUS BOTTOM CHORD TRUSS LATERAL BRACING WITH 2-16d AT EACH TRUSS BOTTOM CHORD AT EACH CHORD TO VERTICAL.

6. ALL TRUSS WOOD COMPONENTS SHALL RECEIVE PRESSURE PRESERVATIVE TREATMENT.

7. ALL METAL PLATE CONNECTORS SHALL BE GALVANIZED.

8. ALL TRUSSES THAT ARE STORED PRIOR TO ERECTION SHALL BE STORED IN THE VERTICAL POSITION & SHALL BE PROTECTED FROM THE WEATHER. TRUSSES DAMAGED DURING ERECTION SHALL BE REPLACED, OR REPAIRED IN A MANNER ACCEPTABLE TO THE ENGINEER.

9. CUTTING, DRILLING OR NOTCHING OF ANY TRUSS COMPONENTS IS PROHIBITED UNLESS OTHERWISE INDICATED.

GARY K. CHOCK
LICENSED PROFESSIONAL ENGINEER
No. 5657-S
HAWAII, U.S.A.
This work was prepared by me or under my supervision.

DESIGNED: GC/GJ	SUB SHEET NO.	TITLE OF SHEET	DRAWING NO. 491 / 41,016
DRAWN: DW		CURATORIAL FACILITY TYPICAL DETAILS	PKG. NO. KAHA 211-5
TECH. REVIEW:	S1.7	Kalaupapa National Historical Park	SHEET 35 OF 71
DATE: 2/21/03			

36/72

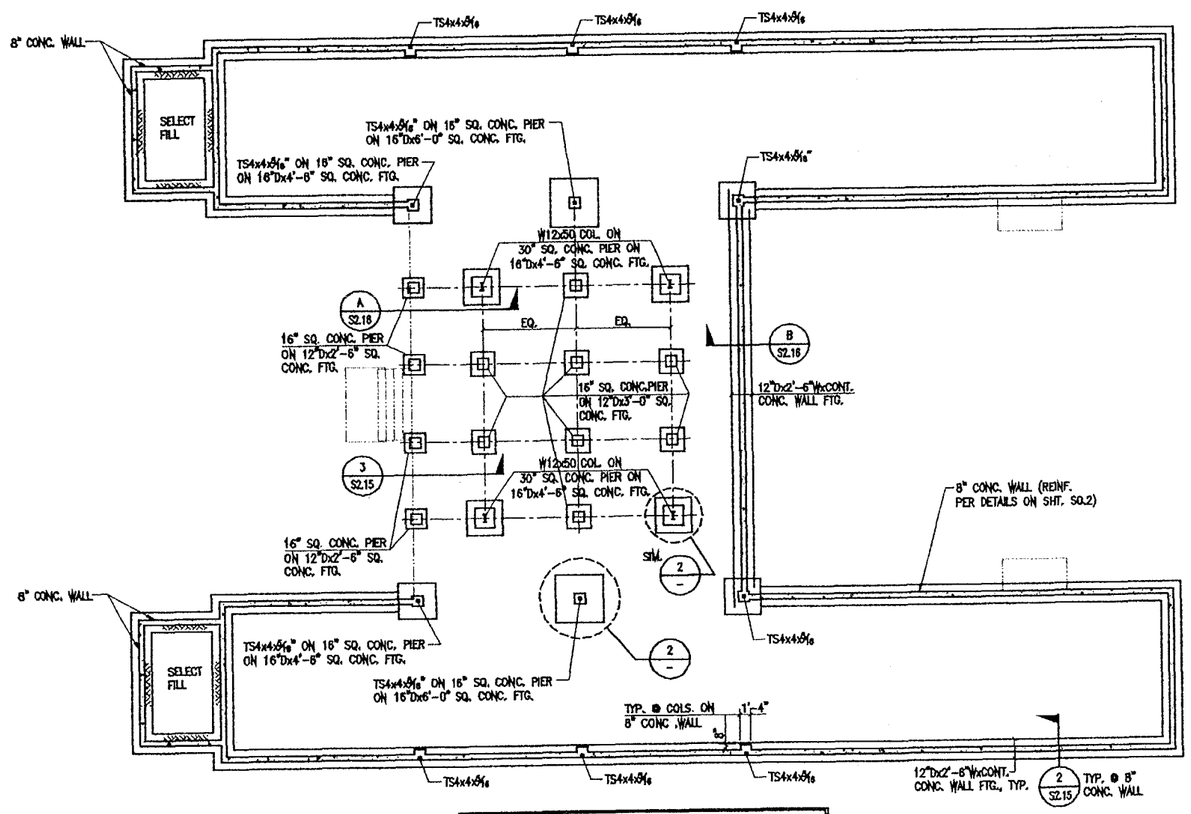

NOTE:
1. ALL EXISTING SOILS BENEATH FOOTINGS SHALL BE OVEREXCAVATED BY AT LEAST 6"; SEE FOUNDATION NOTES, SHEET S0.1.
2. FOR TYPICAL FOOTING REINFORCING, SEE 2/-

A/S2.12 FOUNDATION PLAN

SCALE OF FEET: 5 0 5 10

PILASTER REINFORCING SCHEDULE			
SIZE	VERT. REINF.	HORIZ. REINF. (TIES)	REINFORCING LAYOUT
16" SQ.	8-#5	#3@3"o.c.	
30" SQ.	12-#8	#3@3"o.c.	

1/S2.12 PILASTER REINFORCING SCHEDULE
NO SCALE

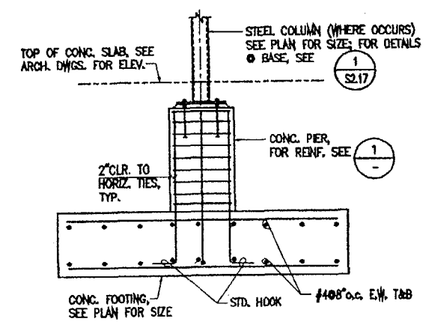

2/S2.12 TYPICAL SECTION AT COLUMN FOOTINGS
NO SCALE

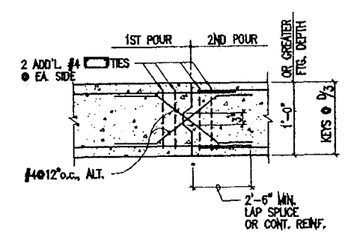

3/S2.12 FOOTING CONSTRUCTION JOINT
NO SCALE

LEGEND:
- CONCRETE
- STEEL
- PLYWOOD
- C.J. — CONSTRUCTION JOINT
- C.C.J. — CRACK CONTROL JOINT
- CONTINUOUS LUMBER
- SOLID BLOCKING
- WOOD POST OR STEEL TUBE COLUMN
- SLAB DEPRESSION
- DECK AND SLAB SPAN DIRECTION
- [19] — NO. OF 3/4"ø WELDED STUDS
- C=1 1/2" — BEAM UPWARD CAMBER
- (-9") — BEAM TOP OF STEEL ELEV. WITH RESPECT TO TYPICAL

REFERENCE NORTH
NORTH
WEST EAST
SOUTH

GARY Y.K. CHOCK LICENSED PROFESSIONAL ENGINEER No. 5657-S HAWAII, U.S.A.
This work was prepared by me or under my supervision.

DESIGNED: GC/GJ	SUB SHEET NO.	TITLE OF SHEET	DRAWING NO. 491 41,016
DRAWN: DW		CURATORIAL FACILITY FOUNDATION PLAN	PKG. NO. KAA 21-3
TECH. REVIEW:	S2.12	Kalaupapa National Historical Park	SHEET 36 OF 71
DATE: 2/21/03			

37/72

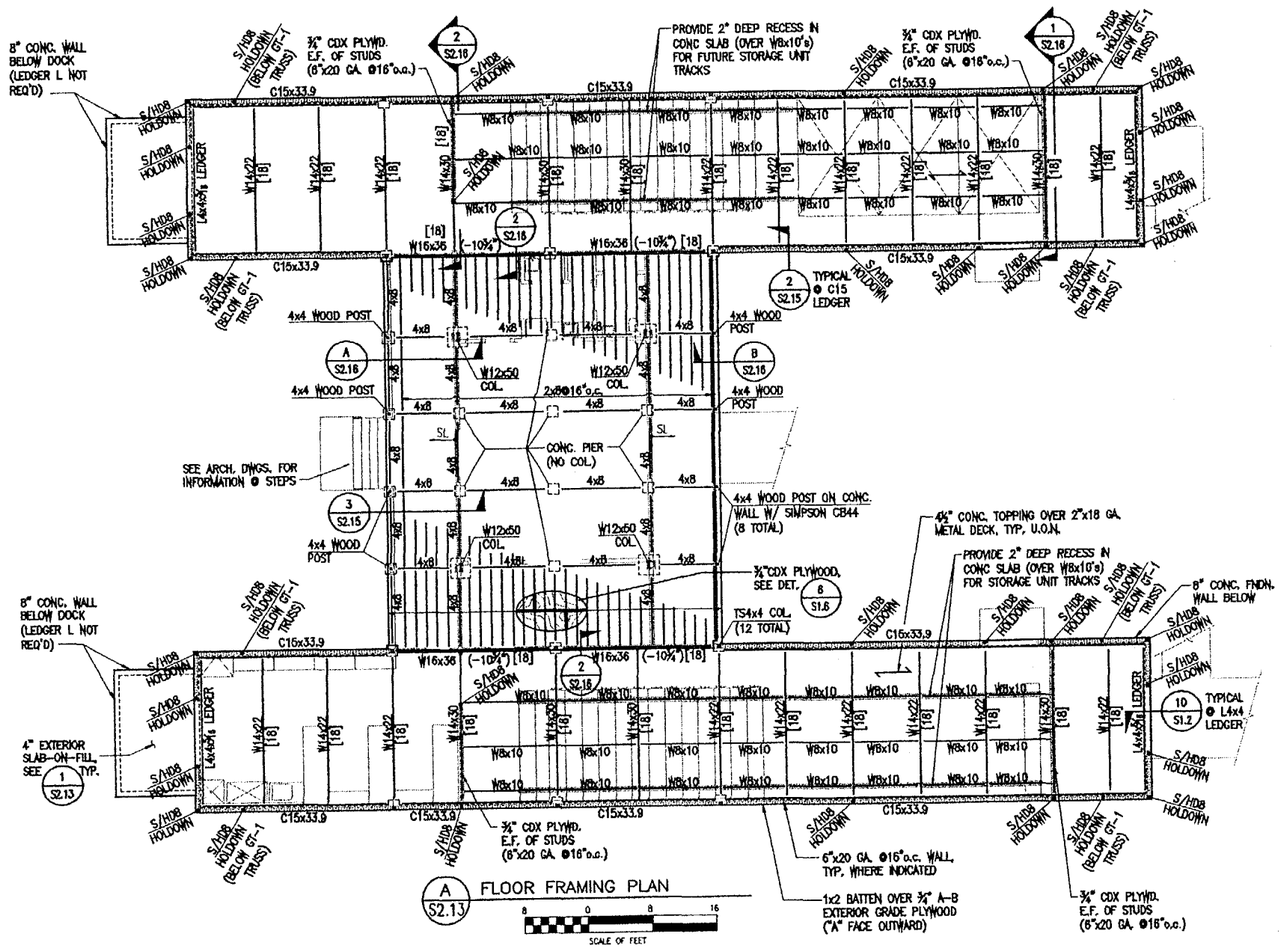

A S2.13 FLOOR FRAMING PLAN

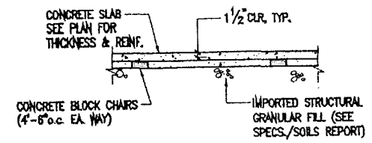

1 S2.13 TYPICAL EXTERIOR SLAB ON FILL
NO SCALE

NOTE:
FOR ADDITIONAL SIMPSON HOLDOWN INFORMATION, SEE DET. 4 S1.5

REFERENCE NORTH
NORTH
WEST EAST
SOUTH

GARY Y.K. CHOCK
LICENSED PROFESSIONAL ENGINEER
No. 5857-4
HAWAII, U.S.A.
This work was prepared by me or under my supervision.

DESIGNED: GC/GJ	SUB SHEET NO.	TITLE OF SHEET	DRAWING NO. 491 / 41,016
DRAWN: DW		CURATORIAL FACILITY	PKG. NO. KALA 2W-5
TECH. REVIEW:	S2.13	FLOOR FRAMING PLAN	SHEET 37
DATE: 2/21/03		Kalaupapa National Historical Park	OF 71

38/72

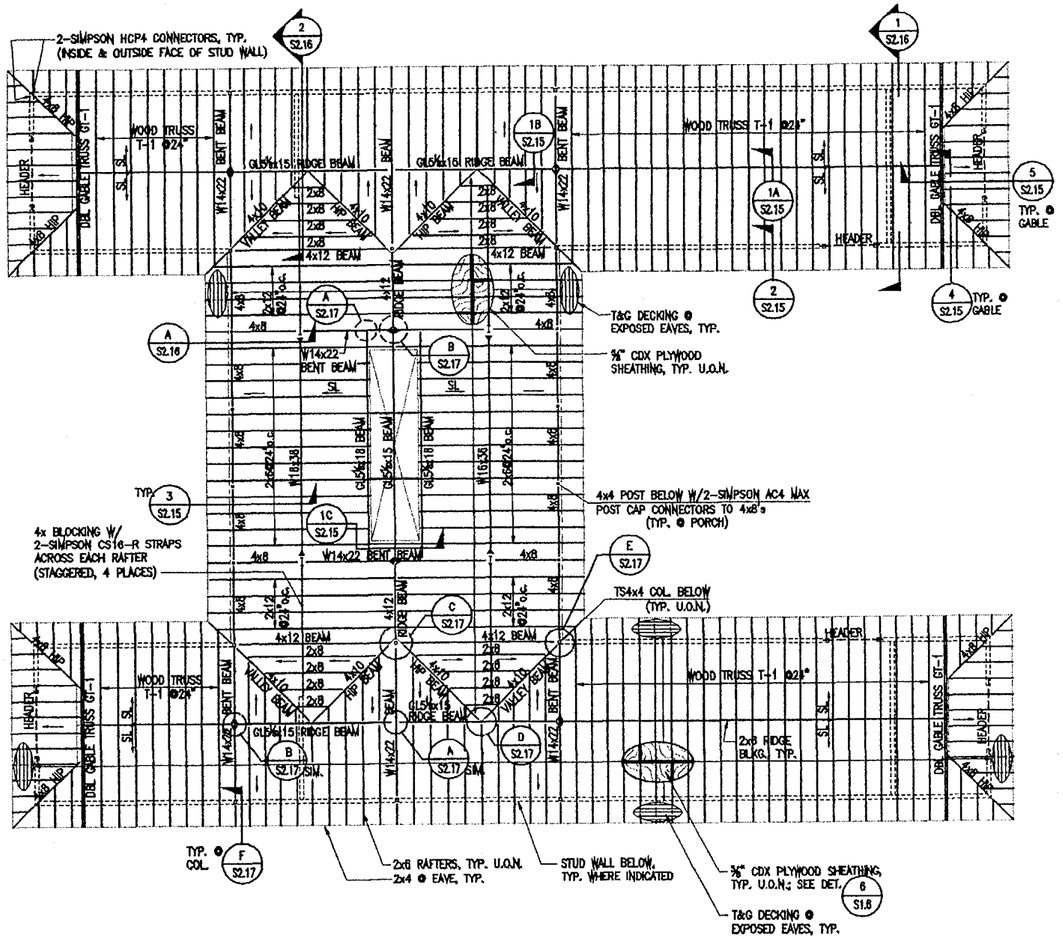

A S2.14 ROOF FRAMING PLAN

8 0 8 16
SCALE OF FEET

NOTE:
FOR ROOFING OVER STRUCTURAL SHEATHING, SEE ARCH. DWGS.

REFERENCE NORTH
NORTH
WEST EAST
SOUTH

GARY K. CHOCK
LICENSED PROFESSIONAL ENGINEER
No. 5657-S
HAWAII, U.S.A.

This work was prepared by me or under my supervision.

DESIGNED: GC/GJ	SUB SHEET NO.	TITLE OF SHEET	DRAWING NO. 491 41,016
DRAWN: DW		CURATORIAL FACILITY ROOF FRAMING PLAN	PKG. NO. KAL-311-5
TECH. REVIEW:	S2.14	Kalaupapa National Historical Park	SHEET 38 OF 71
DATE: 2/21/03			

39/72

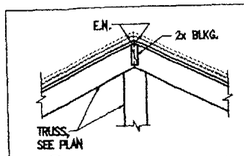

(A) AT TRUSS TOP CHORD

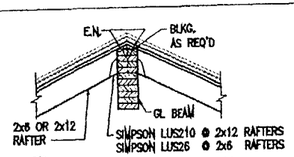

(B) AT RAFTERS TO GL BEAM

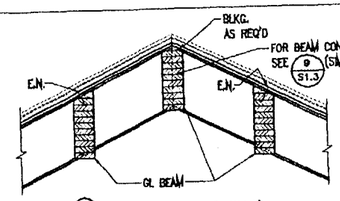

(C) AT GL BEAMS TO W14's

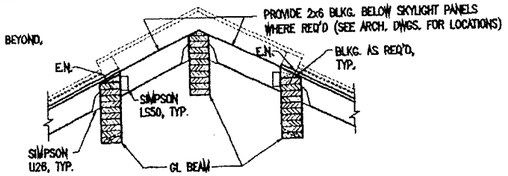

(D) AT GL BEAMS AT ROOF VENT/SKYLIGHT

1 / S2.15 RIDGE DETAILS
SCALE: 3/4" = 1'-0"

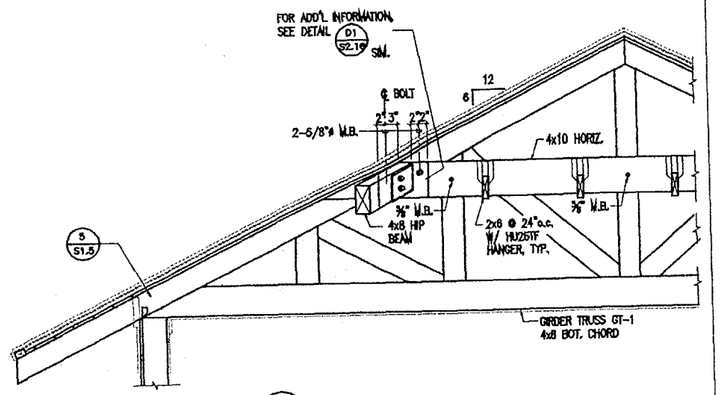

4 / S2.15 TYPICAL SECTION AT GABLE
SCALE: 3/4" = 1'-0"

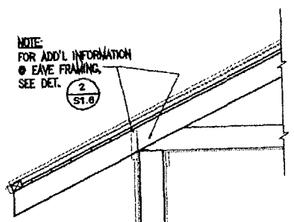

2 / S2.15 WALL SECTION
SCALE: 3/4" = 1'-0"

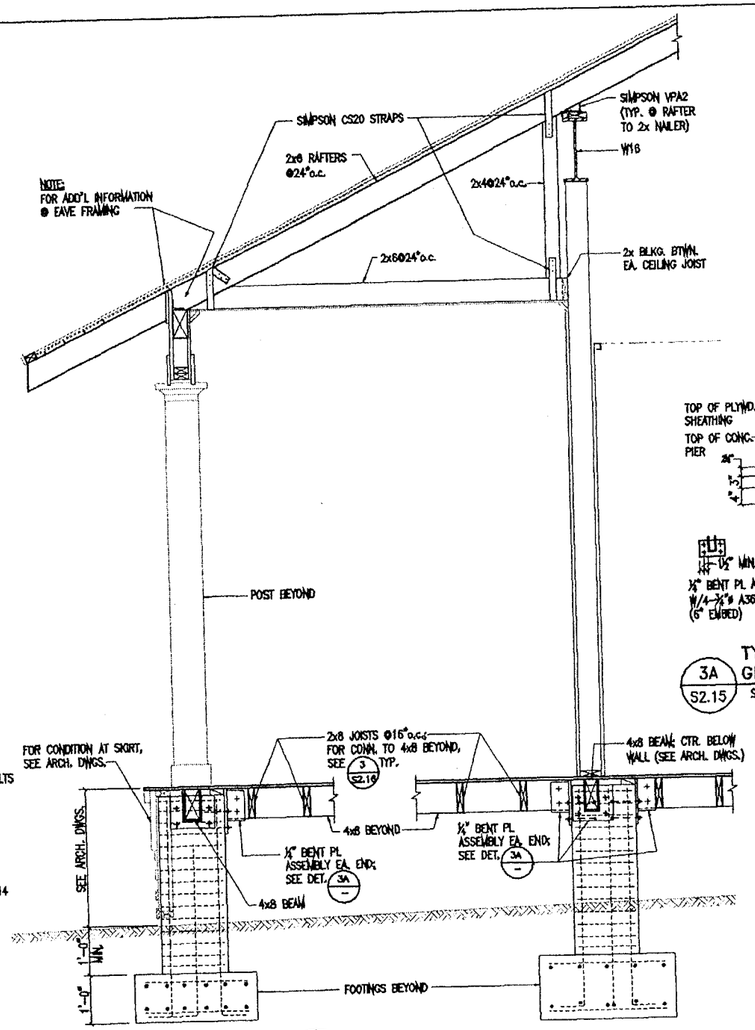

3 / S2.15 WALL SECTION
SCALE: 3/4" = 1'-0"

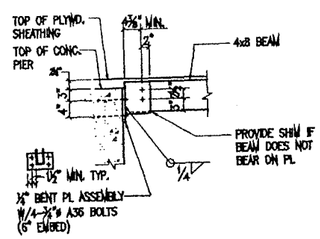

3A / S2.15 TYP. CONN. DETAIL @ GL OR 4x BEAM TO PIER
SCALE: 3/4" = 1'-0"

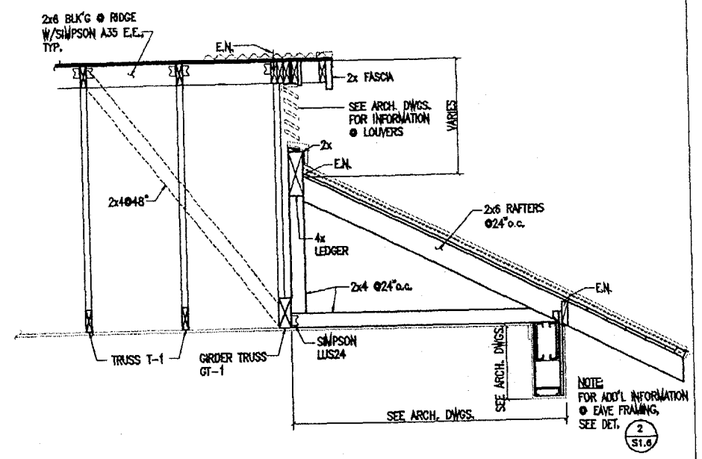

5 / S2.15 TYPICAL SECTION AT GABLE
SCALE: 3/4" = 1'-0"

GARY Y.K. CHOCK
LICENSED PROFESSIONAL ENGINEER
No. 5657-S
HAWAII, U.S.A.

This work was prepared by me or under my supervision.

DESIGNED: GC/GJ	SUB SHEET NO.	TITLE OF SHEET	DRAWING NO. 491 / 41,016
DRAWN: DW		CURATORIAL FACILITY	PKG. NO. K&LA 211-2
TECH. REVIEW:	S2.15	SECTIONS & DETAILS	SHEET 39
DATE: 2/21/03		Kalaupapa National Historical Park	OF 71

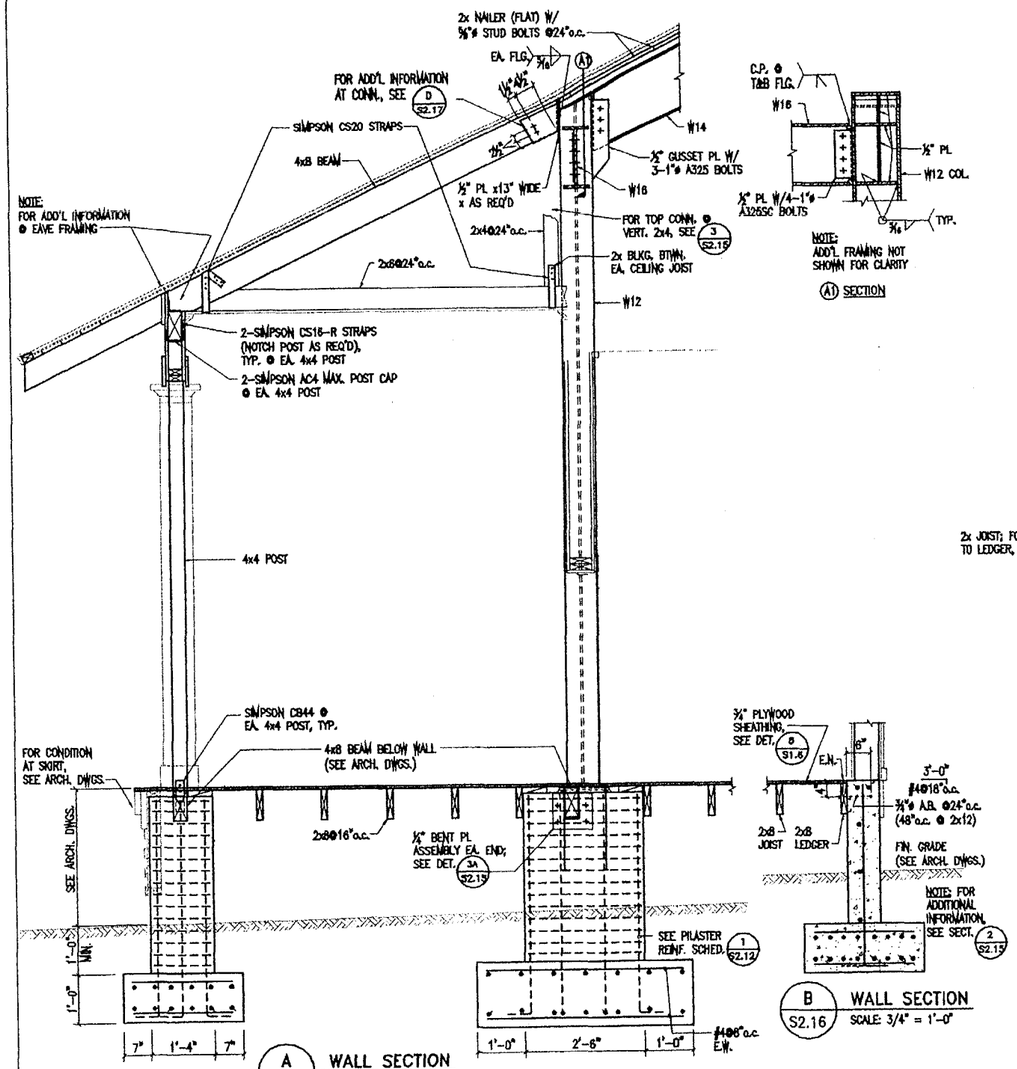

A S2.16 WALL SECTION
SCALE: 3/4" = 1'-0"

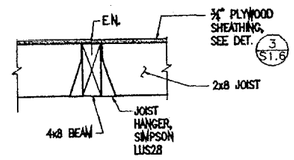

3 S2.16 JOIST CONN. DETAIL
SCALE: 1"=1'-0"

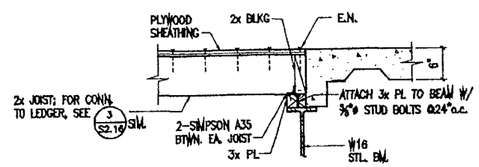

4 S2.16 FLR. SLAB TO FLR. SHEATHING TRANSITION
SCALE: 1" = 1'-0"

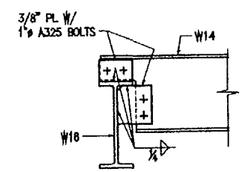

5 S2.16 BEAM TO LOW BEAM CONNECTION
SCALE: 1" = 1'-0"

B S2.16 WALL SECTION
SCALE: 3/4" = 1'-0"

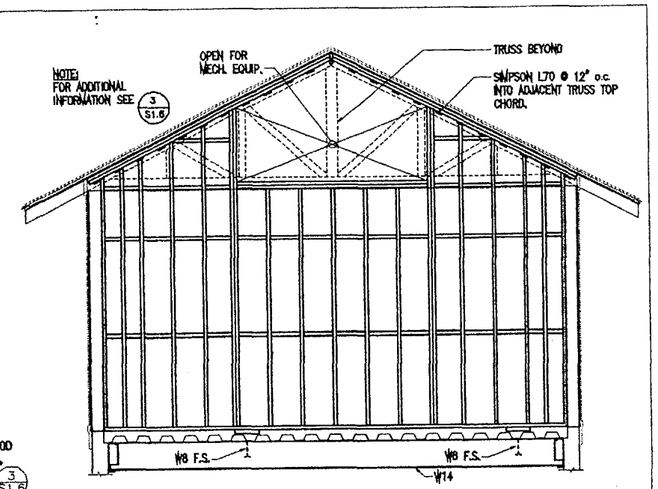

1 S2.16 SHEARWALL ELEVATION
SCALE: 3/8" = 1'-0"

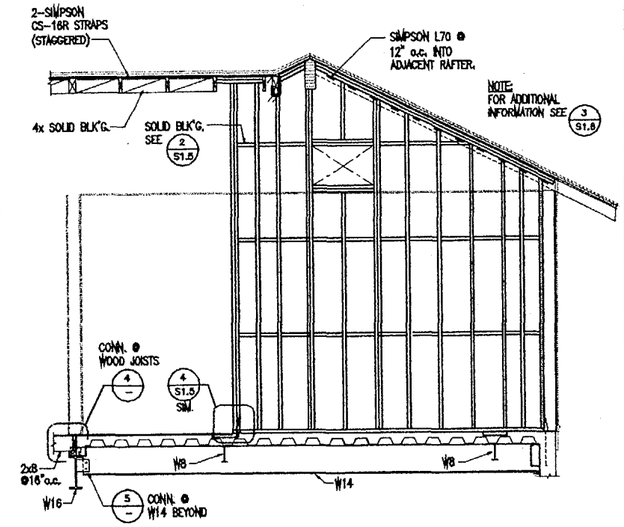

2 S2.16 SHEARWALL ELEVATION
SCALE: 3/8" = 1'-0"

GARY Y.K. CHOCK
LICENSED PROFESSIONAL ENGINEER
No. 5657-S
HAWAII, U.S.A.

This work was prepared by me or under my supervision.

DESIGNED: GC/GJ	SUB SHEET NO.	TITLE OF SHEET	DRAWING NO 491 41,016
DRAWN: DW		CURATORIAL FACILITY	PKG. NO. KALA 211-5
TECH. REVIEW:	S2.16	SECTIONS & DETAILS	SHEET 40 OF 71
DATE: 2/21/03		Kalaupapa National Historical Park	

41/72

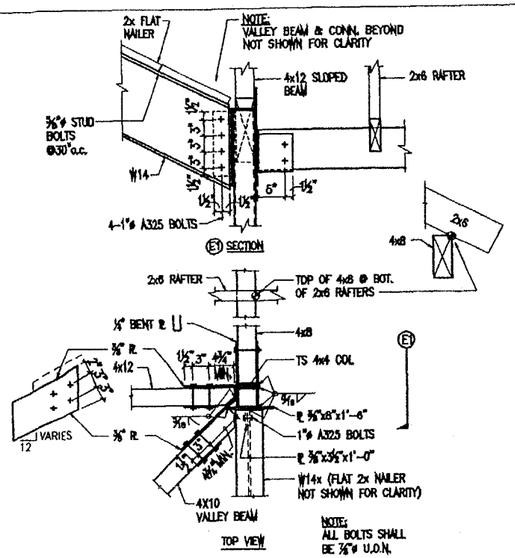

E S2.17 CONNECTION – VALLEY BEAM AT EAVE
SCALE: 1" = 1'-0"

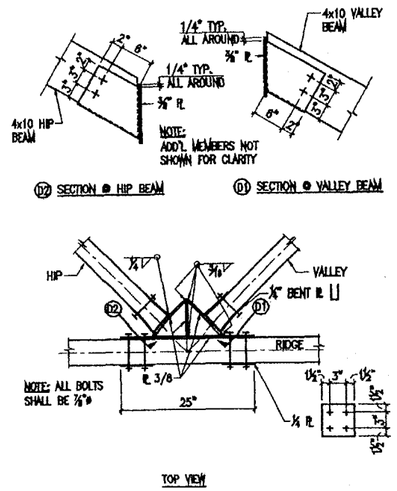

D S2.17 HIP/RIDGE/VALLEY CONNECTION
SCALE: 1" = 1'-0"

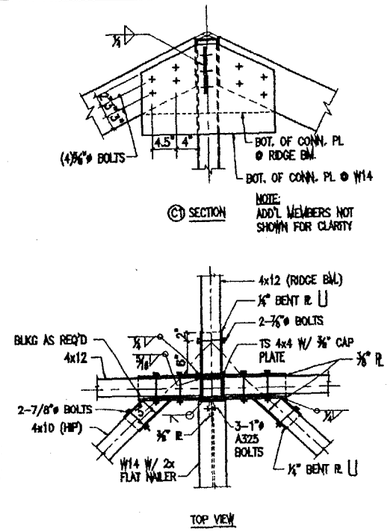

C S2.17 HIP/RIDGE/VALLEY CONNECTION
SCALE: 1" = 1'-0"

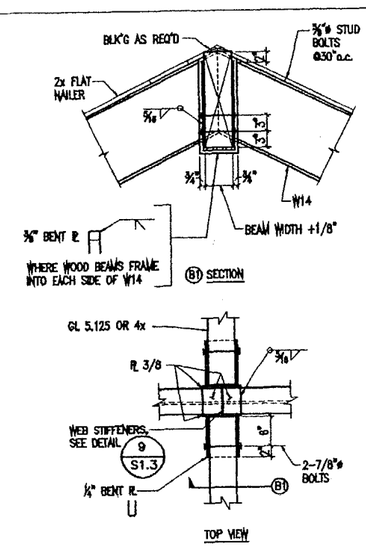

B S2.17 RIDGE BEAM TO BENT W14 BEAM
SCALE: 1" = 1'-0"

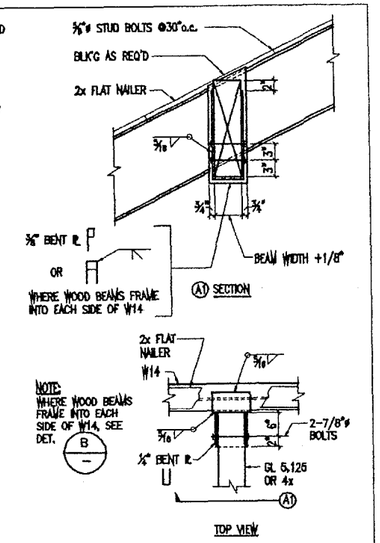

A S2.17 WOOD BEAM TO SLOPED W14
SCALE: 1" = 1'-0"

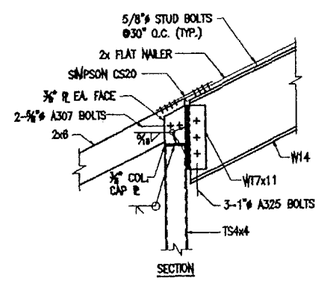

F S2.17 W14 TO TS 4x4 CONNECTION
SCALE: 1" = 1'-0"

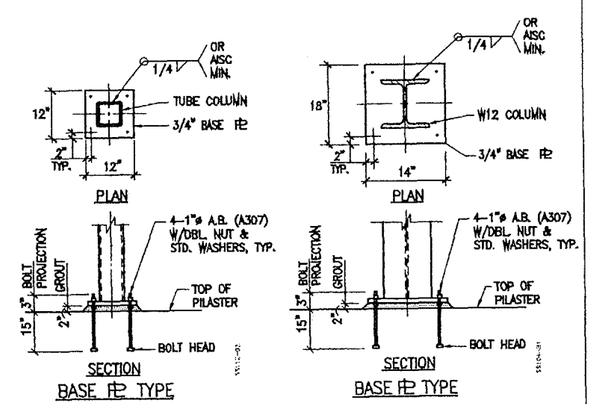

1 S2.17 TYP. COLUMN BASE PLATE DETAILS
NO SCALE

GARY Y.K. CHOCK
LICENSED PROFESSIONAL ENGINEER
No. 5657-S
HAWAII, U.S.A.
This work was prepared by me or under my supervision.

DESIGNED: GC/GJ	SUB SHEET NO.	TITLE OF SHEET	DRAWING NO. 491 / 41,016
DRAWN: DW	S2.17	CURATORIAL FACILITY SECTIONS & DETAILS Kalaupapa National Historical Park	PKG. NO. KULE 2045
TECH. REVIEW:			SHEET 41 OF 71
DATE: 2/21/03			

42/72

GENERAL NOTES:

1. ALL WORK SHOWN ON THESE DRAWINGS ARE NEW UNLESS OTHERWISE NOTED.
2. EXISTING CONDITIONS AND DIMENSIONS SHOWN ON THESE DRAWINGS ARE APPROXIMATE. BIDDERS SHALL VISIT THE PREMISES AND THOROUGHLY FAMILIARIZE THEMSELVES WITH ALL DETAILS OF WORK AND WORKING CONDITIONS BEFORE SUBMITTING THEIR BID. REASONABLE MODIFICATIONS IN LOCATION AND ARRANGEMENTS TO SUIT JOB CONDITIONS SHALL NOT CONSTITUTE BASIS FOR REQUESTING OF ADDITIONAL FUNDS FROM THE OWNER.
3. PRIOR TO ORDERING MATERIALS AND PROCURING EQUIPMENT, SUCCESSFUL BIDDER (CONTRACTOR) SHALL BE REQUIRED TO VERIFY ALL EXISTING CONDITIONS, INCLUDING BUT NOT LIMITED TO EQUIPMENT, MATERIALS, SIZES, DIMENSIONS, INVERTS, AND VOLTAGES THAT AFFECT HIS WORK. SUBMIT A LETTER TO THE ENGINEER CONFIRMING THAT THIS WAS DONE. IF WRITTEN CONFIRMATION IS NOT RECEIVED BY THE ENGINEER, SHOP DRAWINGS AND OTHER SUBMITTALS WILL BE RETURNED WITHOUT REVIEW. SHOW ALL DISCREPANCIES ON SHOP DRAWINGS AND NOTIFY THE ENGINEER IN WRITING OF SUCH DISCREPANCIES PRIOR TO PROCUREMENT.
4. EXISTING UTILITY LATERAL LOCATIONS ARE CRITICAL WHERE BUILDING UTILITIES CONNECT TO EXISTING, CONTRACTOR SHALL VERIFY THE EXACT LOCATION (BY TONING) AND INVERTS (BY EXCAVATION), BEFORE ORDERING MATERIALS.
5. ALL UTILITIES AND APPURTENANCES SHALL BE PROTECTED AT ALL TIMES DURING CONSTRUCTION, AND IF DAMAGED, SHALL BE REPAIRED BY THE CONTRACTOR AT NO COST TO OWNER.
6. CONTRACTOR SHALL BE AWARE THAT HAZARDOUS MATERIALS ARE PRESENT THROUGHOUT THIS PROJECT; SEE SPECIFICATIONS FOR REMEDIATION REQUIREMENTS.
7. FOR ALL FLOOR, WALL PARTITION, CEILING AND ROOF PENETRATIONS, SEE ARCHITECTURAL DRAWINGS FOR DETAILS.
8. NO CUTTING OR DRILLING OF ANY STRUCTURAL MEMBERS WILL BE PERMITTED WITHOUT THE APPROVAL OF THE STRUCTURAL ENGINEER. REFER TO STRUCTURAL DRAWING DETAILS FOR ALL MECHANICAL EQUIPMENT AND PIPING ATTACHMENTS TO STRUCTURAL MEMBERS.
9. ALL FASTENERS, SUPPORTS, PIPE HANGERS, AND MISCELLANEOUS STEEL ITEMS INCLUDING BUT NOT LIMITED TO BOLTS, NUTS, SCREWS, RODS, PLATES, AND ANGLES, ETC. SHALL BE GALVANIZED UNLESS OTHERWISE NOTED OR SPECIFIED.
10. PAINT ALL EXPOSED PIPING; COLOR PER SPECIFICATION. PROVIDE ESCUTCHEONS WHERE ALL EXPOSED PIPING PENETRATES FINISHED WALLS, FLOORS, AND CEILINGS.
11. CONTRACTOR SHALL TURN OVER ALL PLUMBING FIXTURES, FAUCETS, TRIM, ETC. TO THE NATIONAL PARK SERVICE. COORDINATE DELIVERY AND LOCATION OF STORAGE WITH THE CONTRACTING OFFICER.

FIRE PROTECTION NOTES:

1. CONTRACTOR SHALL PERFORM THE FOLLOWING BEFORE INSTALLATION:
   - A. SUBMIT SIX (6) SETS OF COMPLETE WORKING DRAWINGS TO THE ENGINEER FOR REVIEW AND APPROVAL.
   - B. SUBMIT SIX (6) SETS OF HYDRAULIC CALCULATIONS TO THE ENGINEER FOR REVIEW AND APPROVAL. IF COMPUTER CALCULATIONS ARE USED, SUBMITTAL SHALL INCLUDE LEGEND OF ALL ABBREVIATIONS AND STEP-BY-STEP DETAILED EXPLANATION OF PRINTOUTS. INCOMPLETE SUBMITTAL WILL BE RETURNED WITHOUT REVIEW.
   - C. HYDRAULIC CALCULATION SHALL ADD 10% SAFETY FACTOR TO TOTAL REQUIRED WATER PRESSURE AT REQUIRED FLOW.
   - D. ALL DRAWINGS AND CALCULATIONS SHALL BE STAMPED BY HAWAII INSURANCE RATING BUREAU AND FIRE SPRINKLER CONTRACTOR'S LICENSED ENGINEER.
2. PROVIDE COMPLETE WET PIPE FIRE SPRINKLER PROTECTION FOR ENTIRE BUILDING PER NFPA 13D & 13R INCLUDING BUT NOT LIMITED TO ALL ROOMS, COMBUSTIBLE ATTIC SPACES, AND CRAWL SPACES.
   - A. OCCUPANCY HAZARD CLASSIFICATION SHALL BE LIGHT UNLESS OTHERWISE NOTED.
3. PROVIDE COMPLETE PRE-ACTION DOUBLE INTERLOCK FIRE SPRINKLER SYSTEM FOR ENTIRE BUILDING PER NFPA 13-1999 INCLUDING BUT NOT LIMITED TO ALL ROOMS AND COMBUSTIBLE ATTIC SPACES. (CURATORIAL FACILITY ONLY)
   - A. OCCUPANCY HAZARD CLASSIFICATION SHALL BE ORDINARY GROUP 1.
4. SITE WATER DATA:

   STATIC PRESSURE = 125 PSI
   RESIDUAL PRESSURE = 34 PSI
   FLOW = 770 GPM
5. FIRE SPRINKLER HEADS AND PIPING INDICATED ON FLOOR PLANS ARE INTENDED TO SHOW GENERAL ROUTING OF PIPING AND TO PROVIDE CONTROL OF CEILING APPEARANCE. THEY SHOULD NOT BE INTERPRETED TO MEAN COMPLETE LAYOUT OF SPRINKLER SYSTEM. FIRE SPRINKLER HEAD LOCATIONS SHALL NOT BE ALTERED EXCEPT WITH THE APPROVAL OF THE ARCHITECT AND ENGINEER.
6. WHERE FIRE SPRINKLER HEADS ARE NOT SHOWN, THE CONTRACTOR SHALL DESIGN AND INSTALL A COMPLETE LAYOUT OF FIRE SPRINKLER HEADS TO PROVIDE AN EFFICIENT LAYOUT AND COVERAGE.
7. ALL SHUT-OFF VALVES THAT CONTROL WATER SUPPLY TO THE FIRE SPRINKLER SYSTEM OR PORTIONS THEREOF SHALL BE PROVIDED WITH GALVANIZED CHAIN AND SOLID BRASS LOCK.
8. WHEN VALVES ARE INSTALLED IN A HORIZONTAL POSITION, VALVE STEM SHALL BE INSTALLED IN A UPRIGHT POSITION. IF THIS IS NOT POSSIBLE BECAUSE OF SPACE AND HEADROOM CONSTRAINTS, VALVE STEM SHALL BE INSTALLED IN AN INCLINED POSITION ABOVE THE HORIZONTAL CENTERLINE OF THE PIPE.
9. BUTTERFLY VALVES MAY BE USED INSTEAD OF OUTSIDE SCREW AND YOKE GATE VALVES WHERE PERMITTED BY NFPA.
10. SOLENOID VALVES AND LOCAL ALARMS SHALL BE SUITABLE FOR 115 VOLTS, SINGLE PHASE.
11. PROVIDE PRESSURE GAUGES AS REQUIRED BY NFPA 13: INSTALLATION OF SPRINKLER SYSTEMS.
12. PROVIDE SPARE SPRINKLER HEADS, PROPER STOPPERS, AND SPECIAL SPRINKLER WRENCH STORED IN A METAL CABINET. CABINET SHALL BE TURNED OVER TO THE OWNER. SPRINKLER WRENCH TO BE USED IN THE REMOVAL AND INSTALLATION OF SPRINKLER HEADS PER UFC, 1988, AMENDED SECTION 10.308 (a).
13. PROVIDE SEISMIC PROTECTION FOR PIPING TO PREVENT DAMAGE FROM EARTHQUAKES, PER NFPA 13.
14. ALL BOTTOM OF FIRE EXTINGUISHERS SHALL BE INSTALLED AT 26-1/2" ABOVE THE FINISHED FLOOR; SEE PLANS FOR LOCATION.
15. THE CONTRACTOR SHALL BE AWARE THAT ALL EXISTING CEILINGS SHALL REMAIN INTACT AND THE INSTALLATION OF SPRINKLERS SHALL BE PERFORMED WITHIN THE ATTIC SPACE.
16. THE CONTRACTOR SHALL BE AWARE THAT THE DIFFICULTY OF FIRE SPRINKLER INSTALLATION WITHIN THE CRAWL SPACE BELOW THE FLOOR VARIES FROM BUILDING TO BUILDING. HEAD ROOM CLEARANCE RANGES FROM 1'-6" TO 5'-0" ABOVE FINISHED GRADE.
17. FIRE EXTINGUISHER SHALL BE 10 LB DRY CHEMICAL WITH UL RATING OF 4A:60B:C WITH WALL MOUNTING BRACKET, UNLESS OTHERWISE NOTED.

MECHANICAL LEGEND:

ACCU	AIR COOLED CONDENSING UNIT
AFF	ABOVE FINISHED FLOOR
CD	CEILING DIFFUSER
CO	CLEANOUT
CONN	CONNECT OR CONNECTION
CONT	CONTINUATION
CV	CHECK VALVE
CW	COLD WATER
EF	EXHAUST FAN
ER	EXHAUST REGISTER
EXST	EXISTING
FCO	FLOOR CLEANOUT
FCU	FAN COIL UNIT
FD	FLOOR DRAIN
FDC	FIRE DEPARTMENT CONNECTION
FE	FIRE EXTINGUISHER
FEC-SR	FIRE EXTINGUISHER CABINET - SEMI-RECESSED
FLXC	FLEXIBLE CONNECTOR
FSPK	FIRE SPRINKLER
GC	GENERAL CONTRACTOR
	HUMIDISTAT
HB	HOSE BIBB
HW	HOT WATER
IWH	INSTANTANEOUS WATER HEATER
LAV	LAVATORY
OA	OUTSIDE AIR
	PENDENT FIRE SPRINKLER HEAD
	PENDENT SIDEWALL FIRE SPRINKLER HEAD
	PENDENT SIDEWALL FIRE SPRINKLER HEAD WITH ESCUTCHEON
RA	RETURN AIR
S OR W	SOIL OR WASTE
SA	SUPPLY AIR
SF	SUPPLY FAN
	SIDEWALL FIRE SPRINKLER HEAD
SS	SERVICE SINK
	THERMOSTAT
TERM	TERMINATE
TYP	TYPICAL
V	VENT
VD	VOLUME DAMPER
VTR	VENT THRU ROOF
WC	WATER CLOSET
WCO	WALL CLEANOUT
WHA	WATER HAMMER ARRESTER

LOUIS T. L. CHENG
LICENSED PROFESSIONAL ENGINEER
No. 3684-M
HAWAII, U.S.A.

04/30/04
Expiration Date of the License

THIS WORK WAS PREPARED BY ME OR UNDER MY SUPERVISION

DESIGNED	SUB SHEET NO.	TITLE OF SHEET	DRAWING NO.
JK	M-1	GENERAL NOTES, FIRE PROTECTION NOTES, AND MECHANICAL LEGEND	491 / 41,016
DRAWN KY		Kalaupapa National Historical Park	PKG. NO. 4.6.4 ZH-5
TECH. REVIEW LC			SHEET 42 OF 71
DATE 2/21/03			

NCPRD\X021\X022103

43/72

C:\Proj\0121\M-01.dwg, 2/21/2003 4:33:00 PM

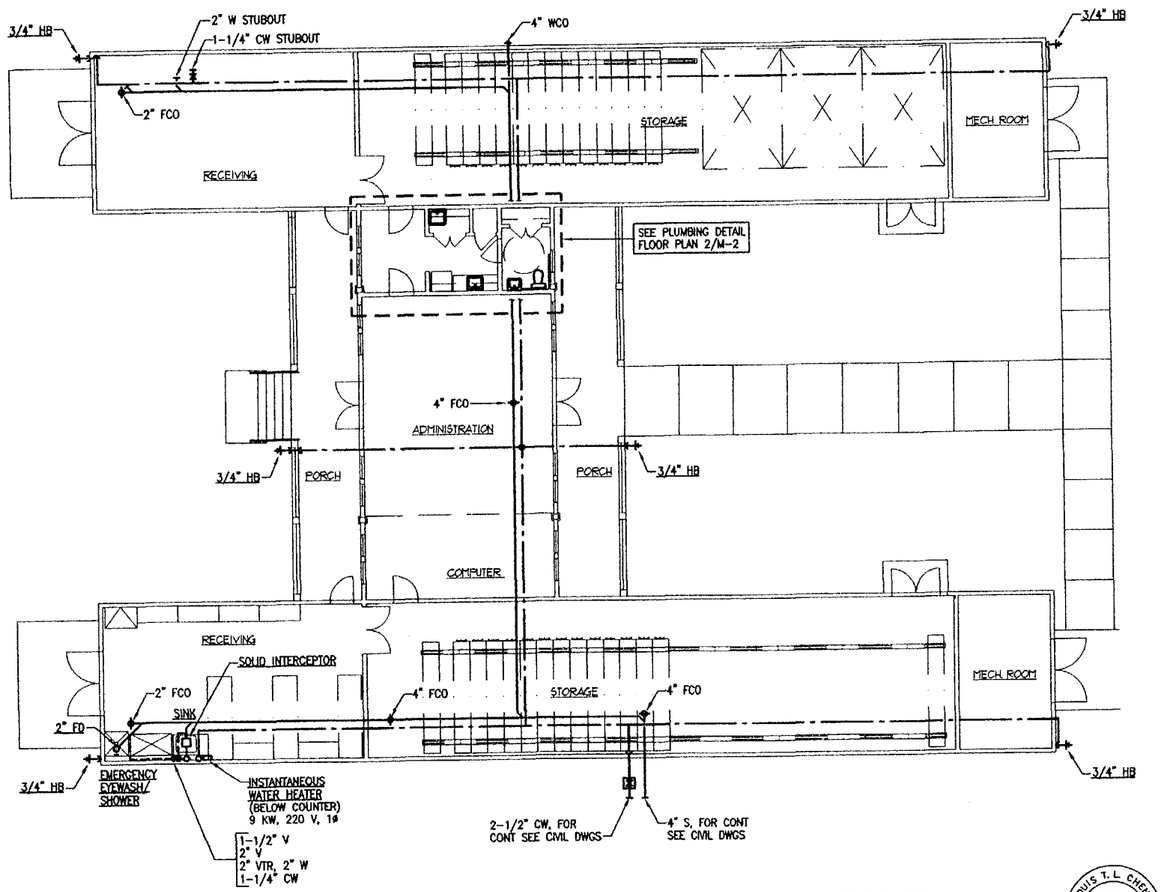

1 M-2 CURATORIAL FACILITY PLUMBING FLOOR PLAN
SCALE: 1/8" = 1'-0"

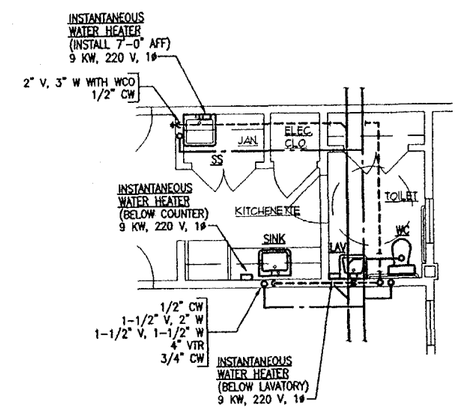

2 M-2 PLUMBING DETAIL FLOOR PLAN
SCALE: 1/4" = 1'-0"

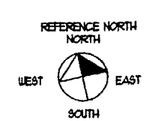

LOUIS T. L. CHENG
LICENSED PROFESSIONAL ENGINEER
No. 3684-M
HAWAII, U.S.A.

04/30/04
Expiration Date of the License

THIS WORK WAS PREPARED BY ME OR UNDER MY SUPERVISION

DESIGNED: JK	SUB SHEET NO.	TITLE OF SHEET	DRAWING NO. 491 / 41,016
DRAWN: KY	M-2	CURATORIAL FACILITY PLUMBING FLOOR PLANS	PKG. NO. KALA 2A-2
TECH. REVIEW: LC		Kalaupapa National Historical Park	SHEET 43 OF 71
DATE: 2/21/03			

TCP\PROJ\012\012003

44/72

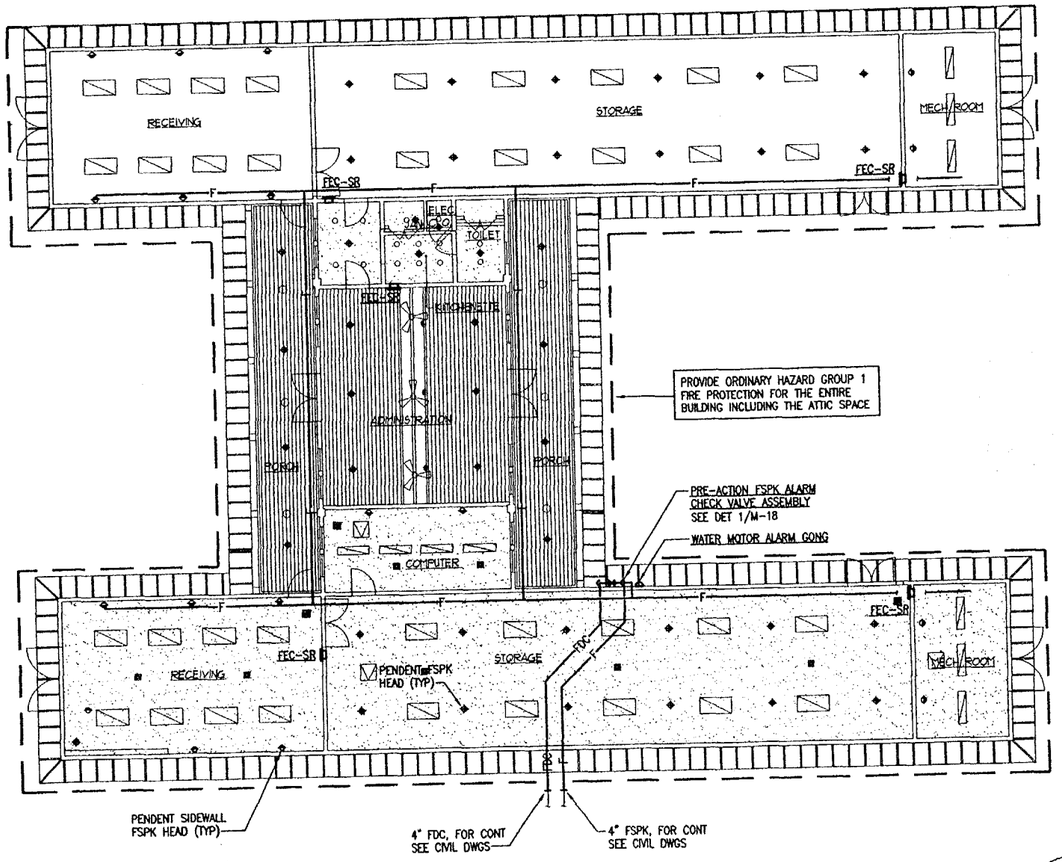

1 / M-3 CURATORIAL FACILITY FIRE PROTECTION FLOOR PLAN
SCALE: 1/8" = 1'-0"

REFERENCE NORTH
NORTH
WEST EAST
SOUTH

LOUIS T. L. CHENG
LICENSED PROFESSIONAL ENGINEER
No. 3684-M
HAWAII, U.S.A.

04/30/04
Expiration Date of the License

THIS WORK WAS PREPARED BY ME OR UNDER MY SUPERVISION

DESIGNED	SUB SHEET NO.	TITLE OF SHEET	DRAWING NO.
JK	M-3	CURATORIAL FACILITY FIRE PROTECTION FLOOR PLAN	491 / 41,016
DRAWN KY		Kalaupapa National Historical Park	PKG. NO. KALA 211-5
TECH. REVIEW LC			SHEET 44 OF 71
DATE 2/21/03			

T:\CPROJ\0121\02103

45/72

E:\Proj\0121\M-03.dwg, 2/21/2003 4:35:15 PM

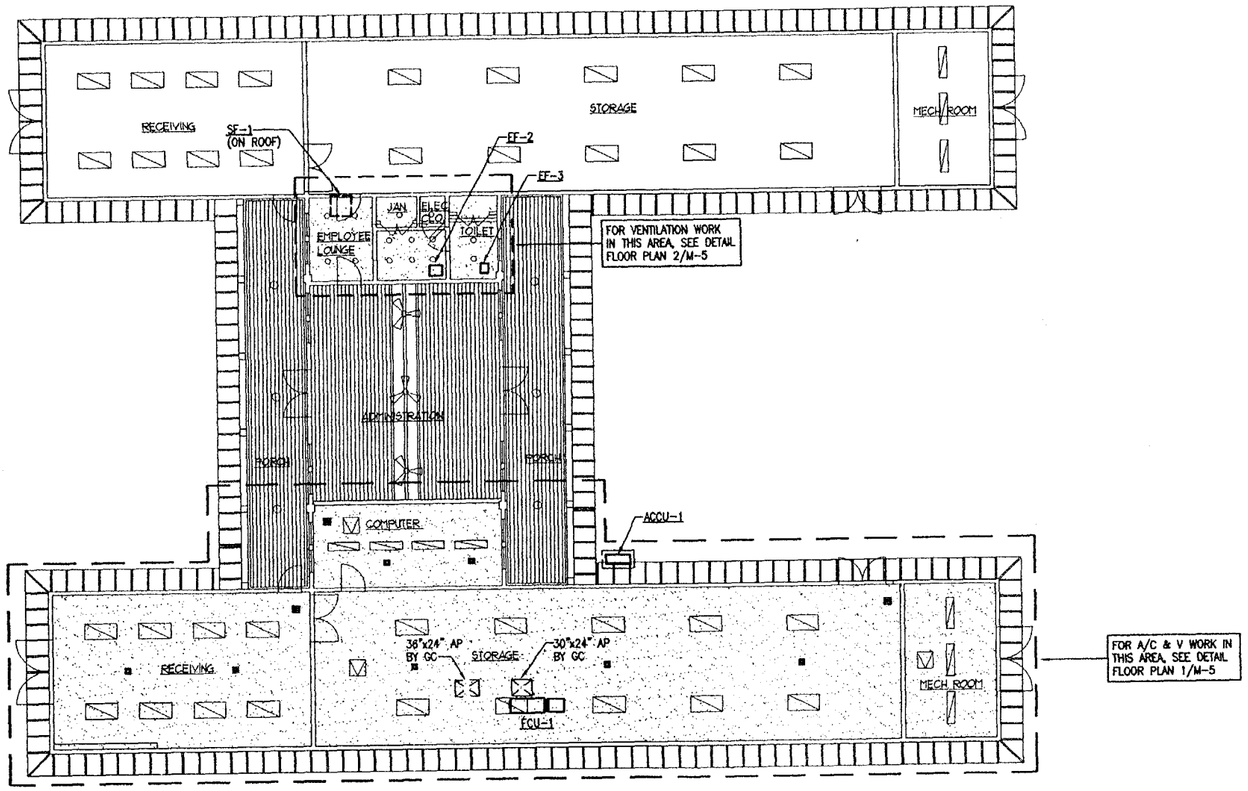

1 / M-4 CURATORIAL FACILITY A/C & V FLOOR PLAN
SCALE: 1/8" = 1'-0"

REFERENCE NORTH
NORTH
WEST
EAST
SOUTH

LOUIS T. L. CHENG
LICENSED PROFESSIONAL ENGINEER
No. 3684-M
HAWAII, U.S.A.

04/30/04
Expiration Date of the License

THIS WORK WAS PREPARED BY ME OR UNDER MY SUPERVISION

DESIGNED	SUB SHEET NO.	TITLE OF SHEET	DRAWING NO.
JK	M-4	CURATORIAL FACILITY AIR CONDITIONING & VENTILATION FLOOR PLAN Kalaupapa National Historical Park	491 41,016
DRAWN: KY			PKG. NO. Kalu-2 211-5
TECH. REVIEW: LC			SHEET 45 OF 71
DATE: 2/21/03			

C:\Proj\0121\M-04.dwg, 2/21/2003 4:35:38 PM

46/72

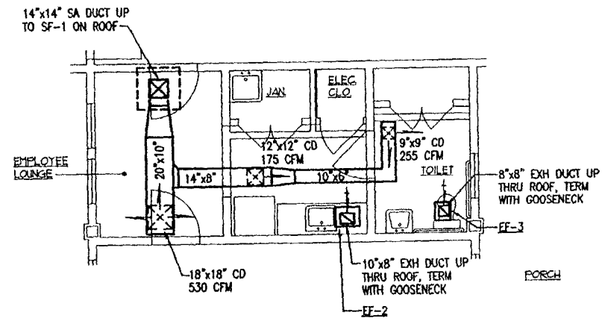

2 / M-5 CURATORIAL FACILITY VENTILATION DETAIL FLOOR PLAN
SCALE: 1/4" = 1'-0"

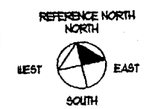

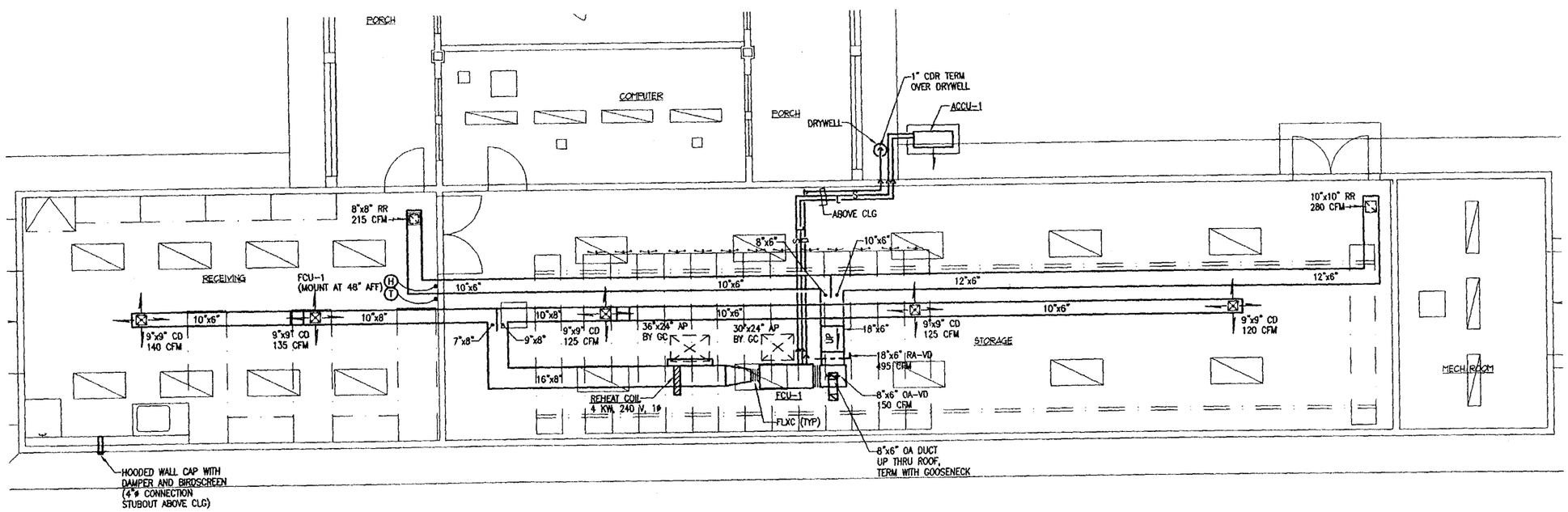

1 / M-5 CURATORIAL FACILITY A/C & V DETAIL FLOOR PLAN
SCALE: 1/4" = 1'-0"

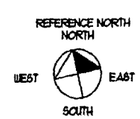

LOUIS T.L. CHENG
LICENSED PROFESSIONAL ENGINEER
No. 3684-M
HAWAII, U.S.A.

04/30/04
Expiration Date of the License

THIS WORK WAS PREPARED BY ME OR UNDER MY SUPERVISION

DESIGNED	SUB SHEET NO.	TITLE OF SHEET	DRAWING NO.
JK	M-5	CURATORIAL FACILITY AIR CONDITIONING & VENTILATION DETAIL FLOOR PLANS Kalaupapa National Historical Park	491 41,016
DRAWN KY			PKG. NO. KALA 21-5
TECH. REVIEW LC			SHEET 46 OF 71
DATE 2/21/03			

\\CS\PROJ\0121\022103

47/72

C:\Proj\0121\M-05.dwg, 2/21/2003 4:36:22 PM

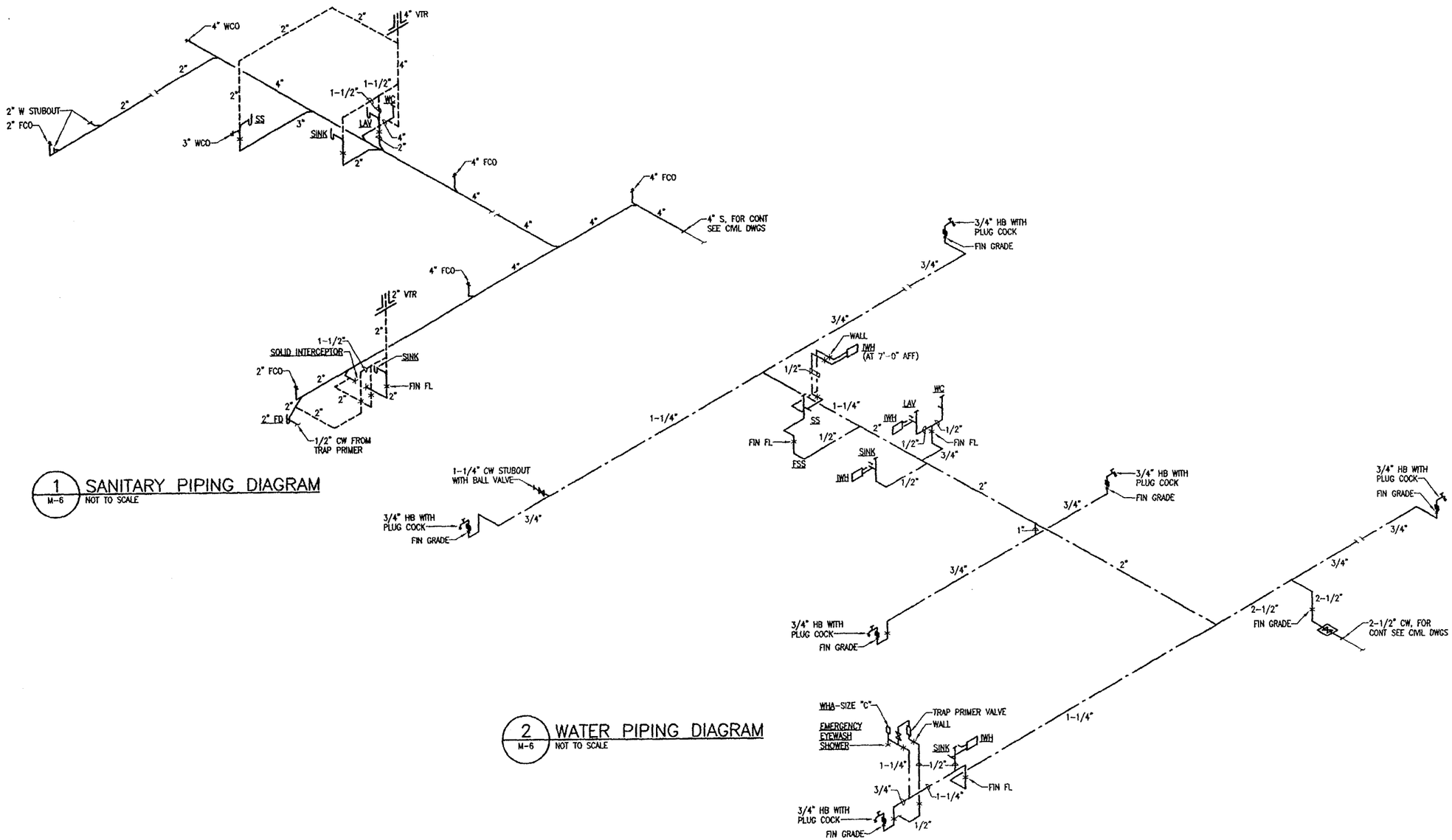

1 M-6 SANITARY PIPING DIAGRAM
NOT TO SCALE

2 M-6 WATER PIPING DIAGRAM
NOT TO SCALE

LOUIS T. L. CHENG
LICENSED PROFESSIONAL ENGINEER
No. 3684-M
HAWAII, U.S.A.

04/30/04
Expiration Date of the License

THIS WORK WAS PREPARED BY ME OR UNDER MY SUPERVISION

DESIGNED	SUB SHEET NO.	TITLE OF SHEET	DRAWING NO.
JK	M-6	CURATORIAL FACILITY SANITARY AND WATER PIPING DIAGRAMS Kalaupapa National Historical Park	491 41,016
DRAWN: KY			PKG. NO. KALA 211-5
TECH. REVIEW: LC			SHEET 47 OF 71
DATE: 2/21/03			

J:\C\PROJ\0121\022103

48/72

C:\Pro\0121\M-06.dwg, 2/21/2003 4:36:45 PM

BID OPTION NO. 1A
FIRE SPRINKLER IN CRAWL SPACE BELOW FLOOR

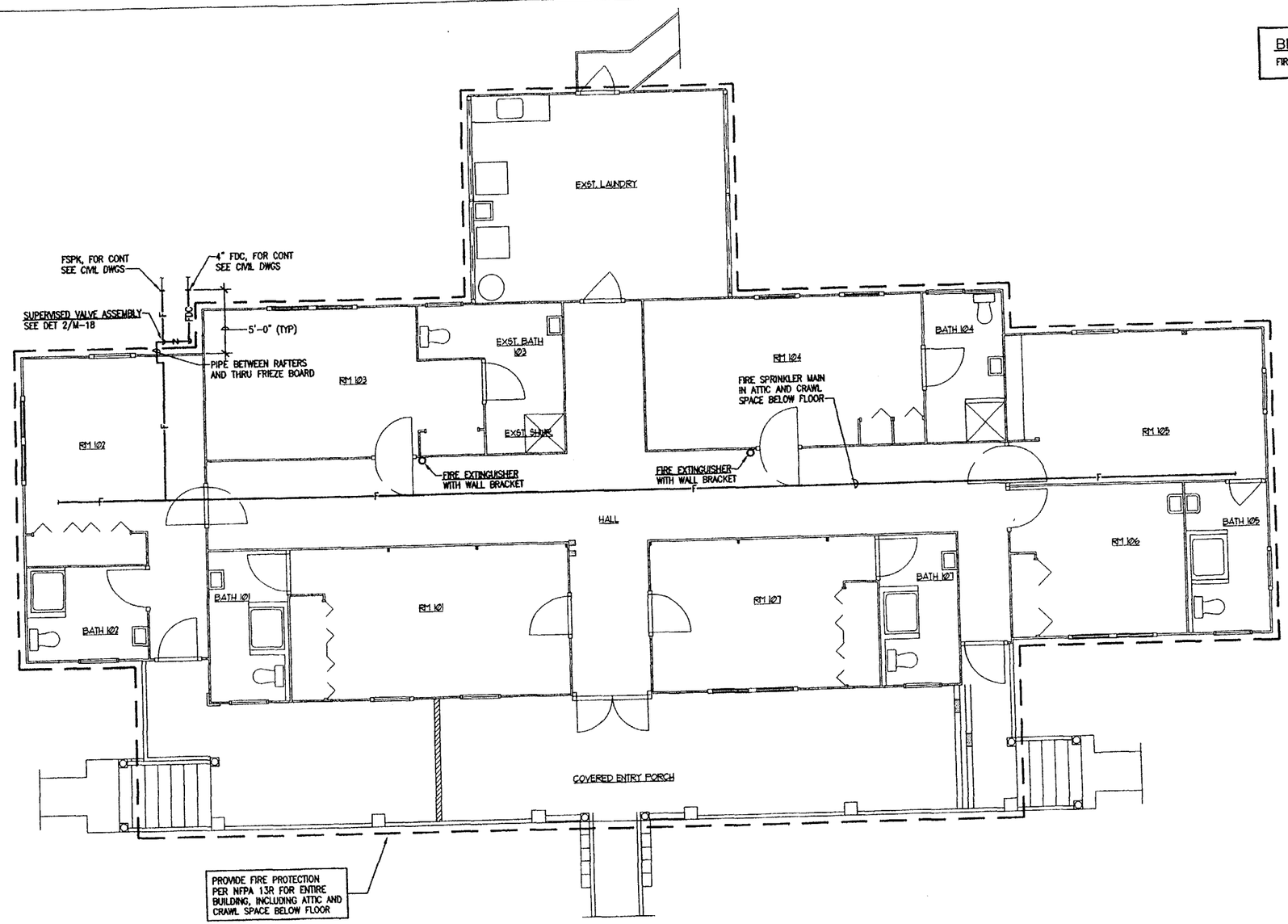

1 / M-7 BAYVIEW 1 FIRE PROTECTION FLOOR PLAN
SCALE: 1/4" = 1'-0"

TRUE NORTH
REFERENCE NORTH
WEST EAST
SOUTH

LOUIS T. L. CHENG
LICENSED PROFESSIONAL ENGINEER
No. 3684-M
HAWAII U.S.A.

04/30/04
Expiration Date of the License

THIS WORK WAS PREPARED BY ME OR UNDER MY SUPERVISION

DESIGNED: JK	SUB SHEET NO.	TITLE OF SHEET	DRAWING NO. 491 / 41,016
DRAWN: KY	M-7	BAYVIEW 1 FIRE PROTECTION FLOOR PLAN BID OPTION #1 Kalaupapa National Historical Park	PKG. NO. KALA 211-S
TECH. REVIEW: LC			SHEET 48 OF 71
DATE: 2/21/03			

K:\PROJ\0121\M22103

C:\Proj\0121\M-07.dwg, 2/21/2003 4:37:27 PM

49/72

BID OPTION NO. 2A
FIRE SPRINKLER IN CRAWL SPACE BELOW FLOOR

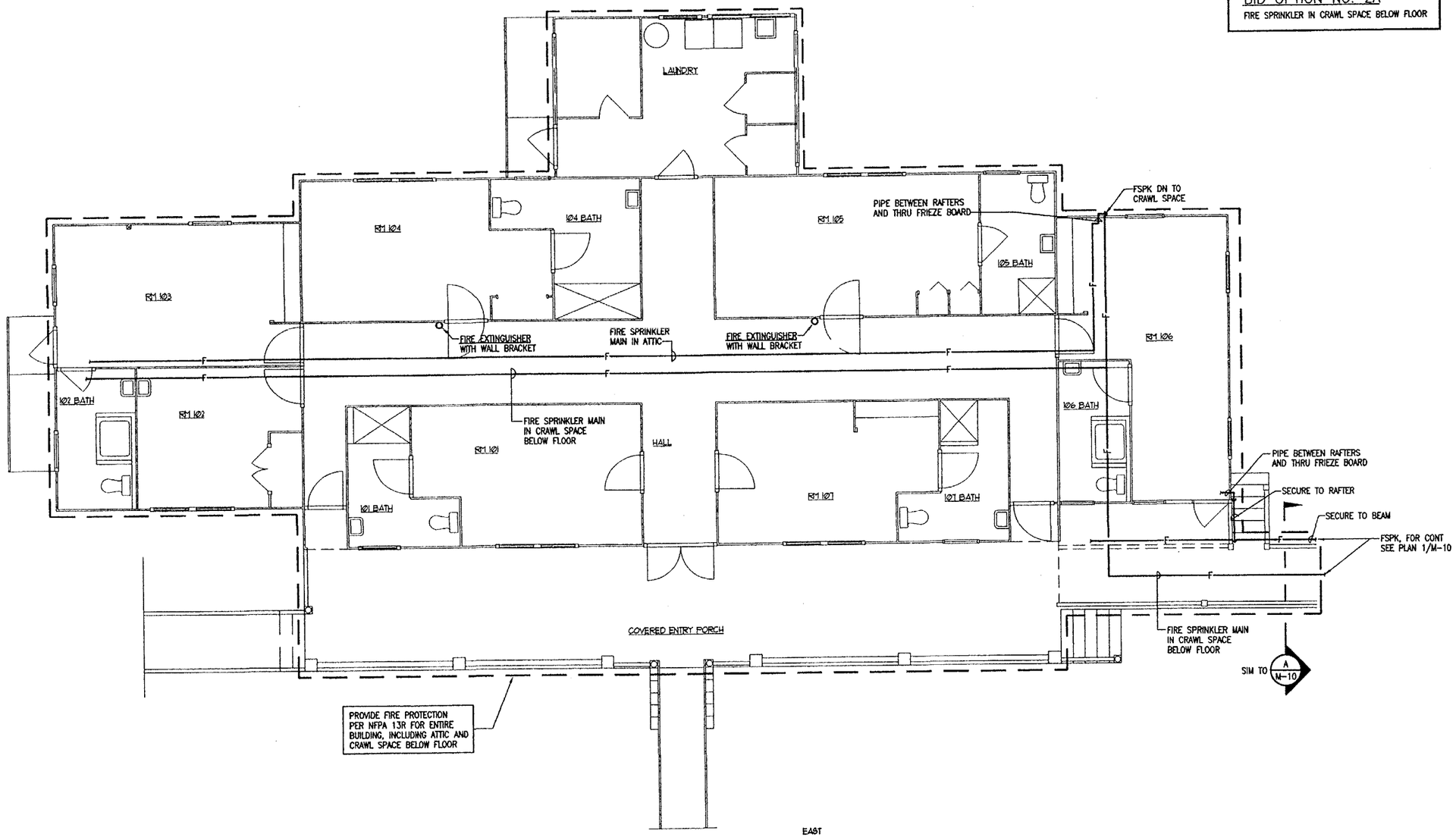

1 / M-8 BAYVIEW 2 FIRE PROTECTION FLOOR PLAN
SCALE: 1/4" = 1'-0"

TRUE NORTH
REFERENCE NORTH
EAST
SOUTH
WEST

LOUIS T. L. CHENG
LICENSED PROFESSIONAL ENGINEER
No. 3684-M
HAWAII, U.S.A.

04/30/04
Expiration Date of the License

THIS WORK WAS PREPARED BY ME OR UNDER MY SUPERVISION

DESIGNED	SUB SHEET NO.	TITLE OF SHEET	DRAWING NO.
JK	M-8	BAYVIEW 2 FIRE PROTECTION FLOOR PLAN BID OPTION #2 Kalaupapa National Historical Park	491 41,016
DRAWN KY			PKG NO. / SHEET 49
TECH. REVIEW LC			OF 71
DATE 2/21/03			

C:\Proj\1012\M-08.dwg, 2/21/2003 4:36:02 PM

50/72

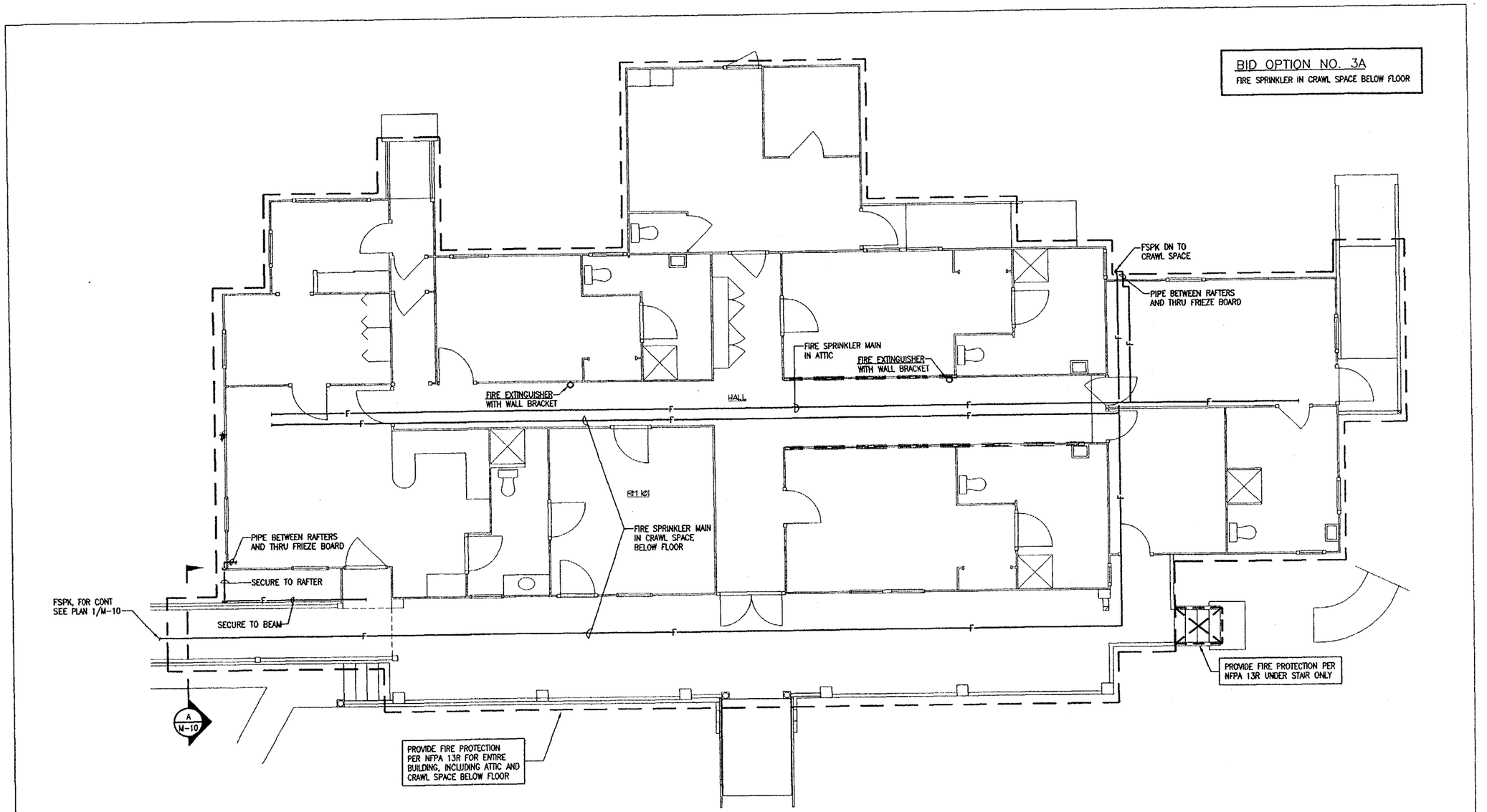

1 / M-9 BAYVIEW 3 FIRE PROTECTION FLOOR PLAN
SCALE: 1/4" = 1'-0"

TRUE NORTH
REFERENCE NORTH
EAST
SOUTH
WEST

LOUIS T. L. CHENG
LICENSED PROFESSIONAL ENGINEER
No. 3684-M
HAWAII, U.S.A.

04/30/04
Expiration Date of the License

THIS WORK WAS PREPARED BY ME OR UNDER MY SUPERVISION

DESIGNED	SUB SHEET NO.	TITLE OF SHEET	DRAWING NO.
JK		BAYVIEW 3	491
DRAWN KY	M-9	FIRE PROTECTION FLOOR PLAN	41,016
TECH. REVIEW LC		BID OPTION #3	PKG. NO. KALA 21-5
DATE: 2/21/03		Kalaupapa National Historical Park	SHEET 50 OF 71

Y:\CPROJ\01212\02103

51/72

C:\Proj\0121\M-09.dwg, 2/21/2003 4:35:53 PM

BID OPTION NO. 4A
FIRE SPRINKLER IN CRAWL SPACE BELOW FLOOR

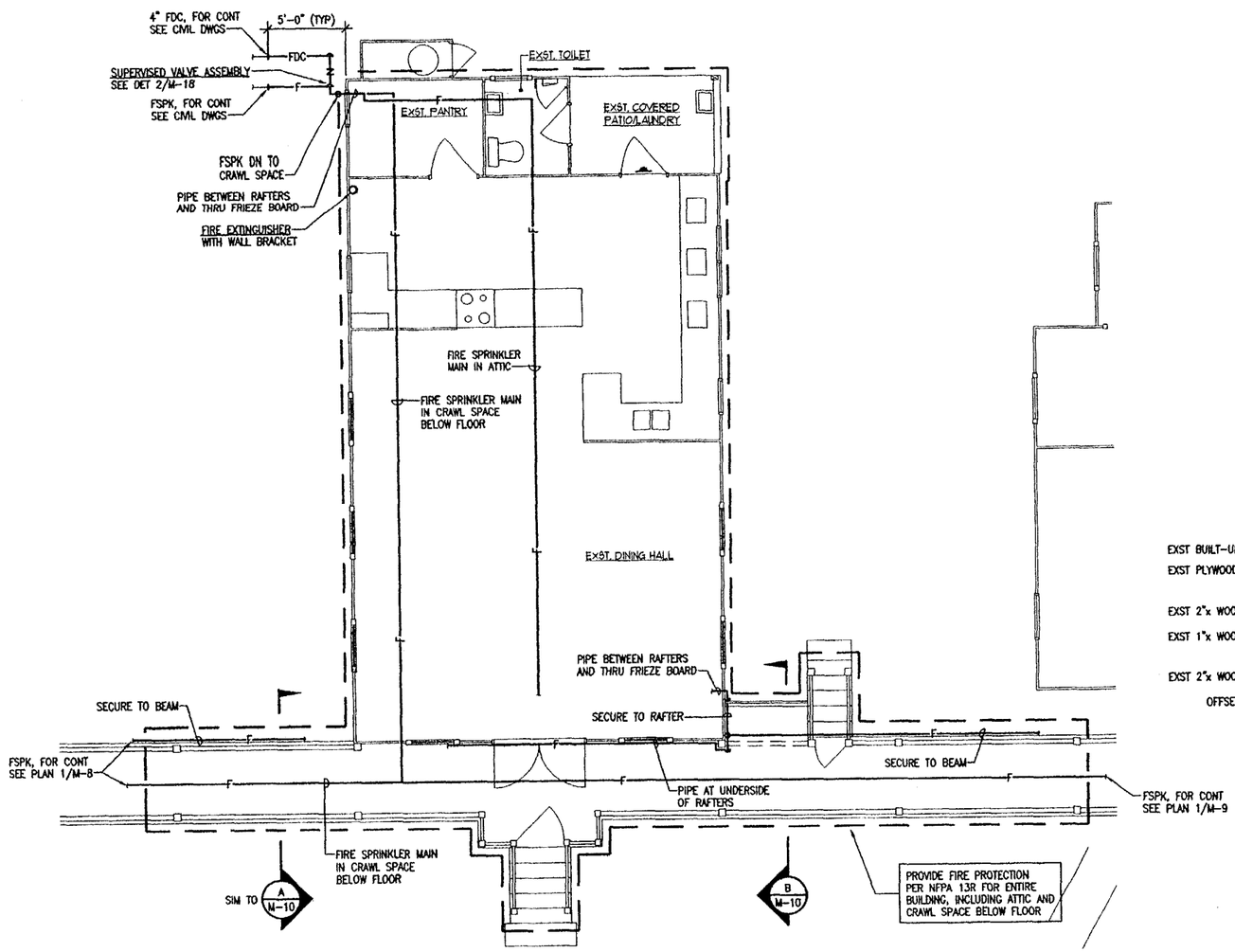

1 M-10 BAYVIEW 5 FIRE PROTECTION FLOOR PLAN
SCALE: 1/4" = 1'-0"

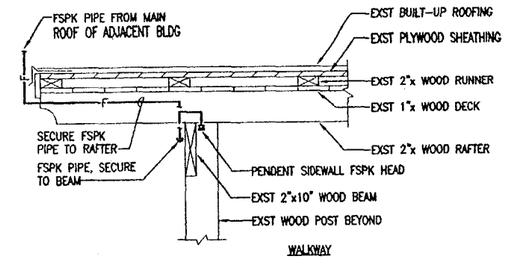

A M-10 SECTION
SCALE: 1" = 1'-0"

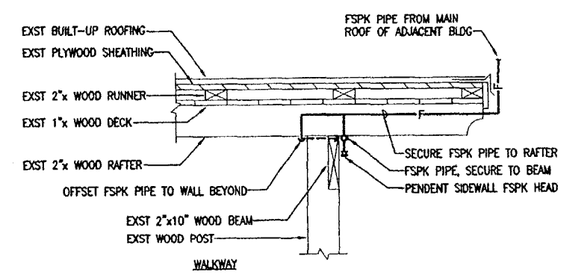

B M-10 SECTION
SCALE: 1" = 1'-0"

TRUE NORTH REFERENCE NORTH
EAST
SOUTH
WEST

LOUIS T. L. CHENG
LICENSED PROFESSIONAL ENGINEER
No. 3654-M
HAWAII, U.S.A.

04/30/04
Expiration Date of the License

THIS WORK WAS PREPARED BY ME OR UNDER MY SUPERVISION

DESIGNED	SUB SHEET NO.	TITLE OF SHEET	DRAWING NO.
JK		BAYVIEW 5	491
DRAWN KY		FIRE PROTECTION FLOOR PLAN	41,016
TECH. REVIEW LC	M-10	BID OPTION #4	PKG. NO. KAUA 211-5 / SHEET 51 OF 71
DATE 2/21/03		Kalaupapa National Historical Park	

52/72

C:\Proj\0121\M-10.dwg, 2/21/2003 4:38:12 PM

BID OPTION NO. 5A

FIRE SPRINKLER IN CRAWL SPACE BELOW FLOOR

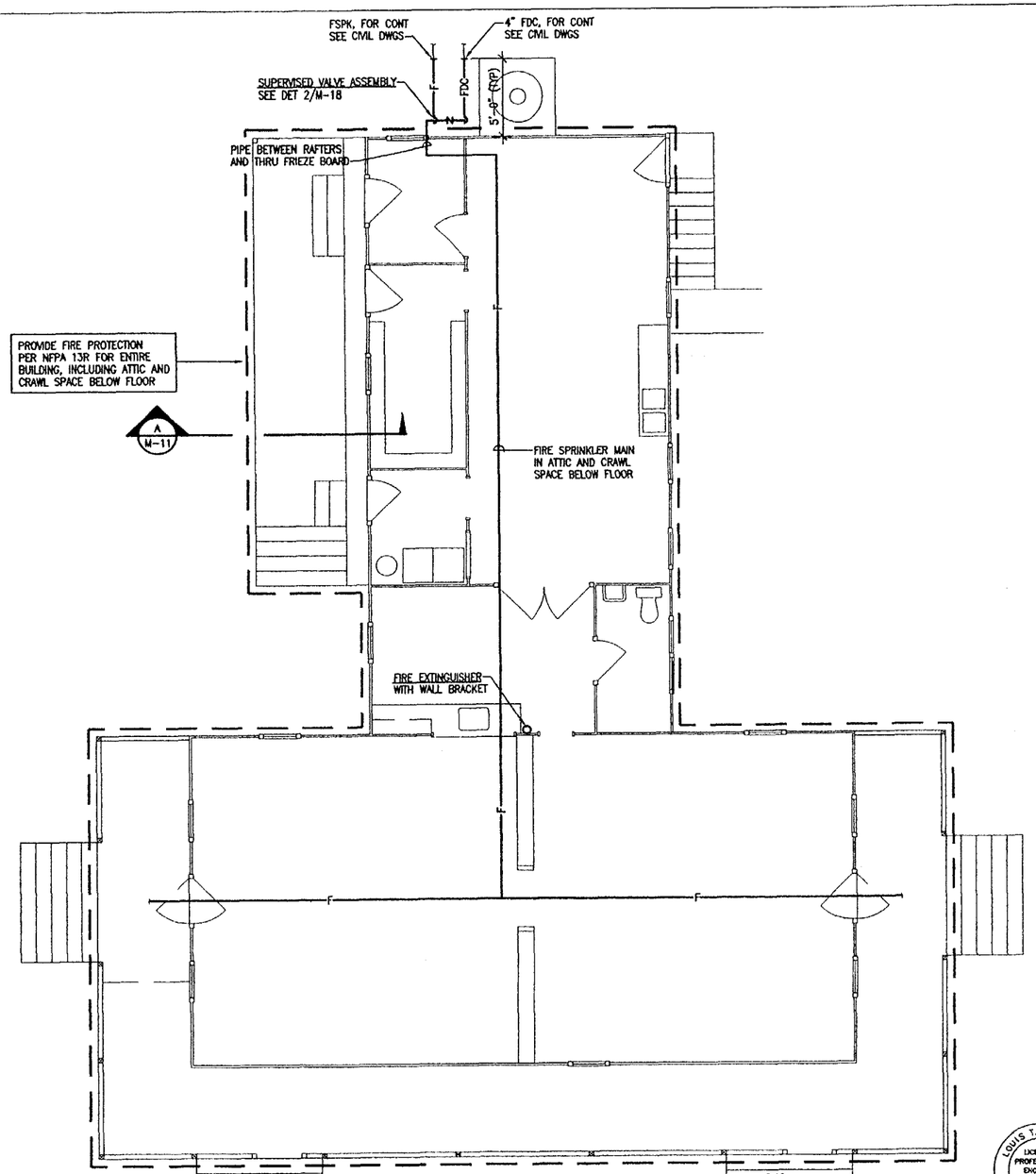

1 M-11 BAYVIEW 6 FIRE PROTECTION FLOOR PLAN

SCALE: 1/4" = 1'-0"

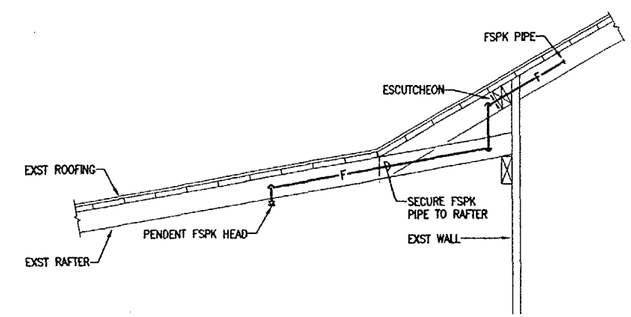

A M-11 SECTION

SCALE: 1" = 1'-0"

LOUIS T. L. CHENG
LICENSED PROFESSIONAL ENGINEER
No. 3684-M
HAWAII U.S.A.

04/30/04
Expiration Date of the License

THIS WORK WAS PREPARED BY ME OR UNDER MY SUPERVISION

DESIGNED: JK	SUB SHEET NO.	TITLE OF SHEET	DRAWING NO. 491 41,016
DRAWN: KT	M-11	BAYVIEW 6 FIRE PROTECTION FLOOR PLAN BID OPTION #5 Kalaupapa National Historical Park	PKG. NO. KALA 211-6
TECH. REVIEW: LC			SHEET 52 OF 71
DATE: 2/21/03			

T:\PROJ\0121\02103

C:\Proj\0121\M-11.dwg, 2/21/2003 4:39:40 PM

53/72

BID OPTION NO. 6A
FIRE SPRINKLER IN CRAWL SPACE BELOW FLOOR

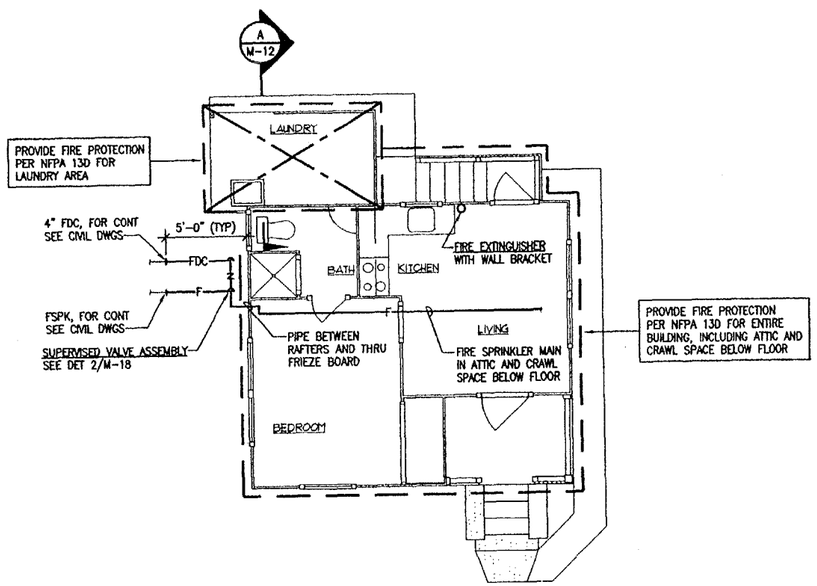

1 / M-12 MCVEIGH NO. 11 FIRE PROTECTION FLOOR PLAN
SCALE: 1/4" = 1'-0"

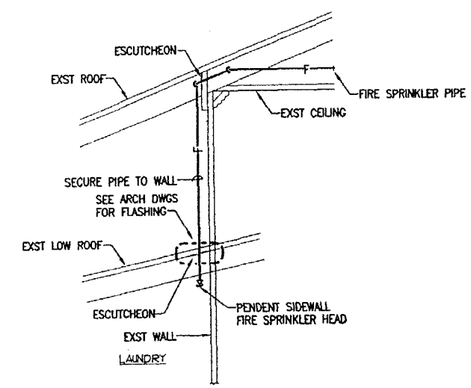

A / M-12 SECTION
SCALE: 1" = 1'-0"

TRUE NORTH
REFERENCE NORTH
WEST EAST
SOUTH

LOUIS T. L. CHENG
LICENSED PROFESSIONAL ENGINEER
No. 3684-U
HAWAII U.S.A.
04/30/04
Expiration Date of the License

THIS WORK WAS PREPARED BY ME OR UNDER MY SUPERVISION

DESIGNED	SUB SHEET NO.	TITLE OF SHEET	DRAWING NO.
JK		MCVEIGH NO. 11 FIRE PROTECTION FLOOR PLAN	491 / 41,016
DRAWN KY	M-12	BID OPTION #6	PKG. NO. KAHA 211-6
TECH. REVIEW LC		Kalaupapa National Historical Park	SHEET 53 OF 71
DATE 2/21/03			

N:\CPRD3\0121\022103

C:\Proj\0121\M-12.dwg, 2/21/2003 4:40:06 PM

54/72

BID OPTION NO. 7A
FIRE SPRINKLER IN CRAWL SPACE BELOW FLOOR

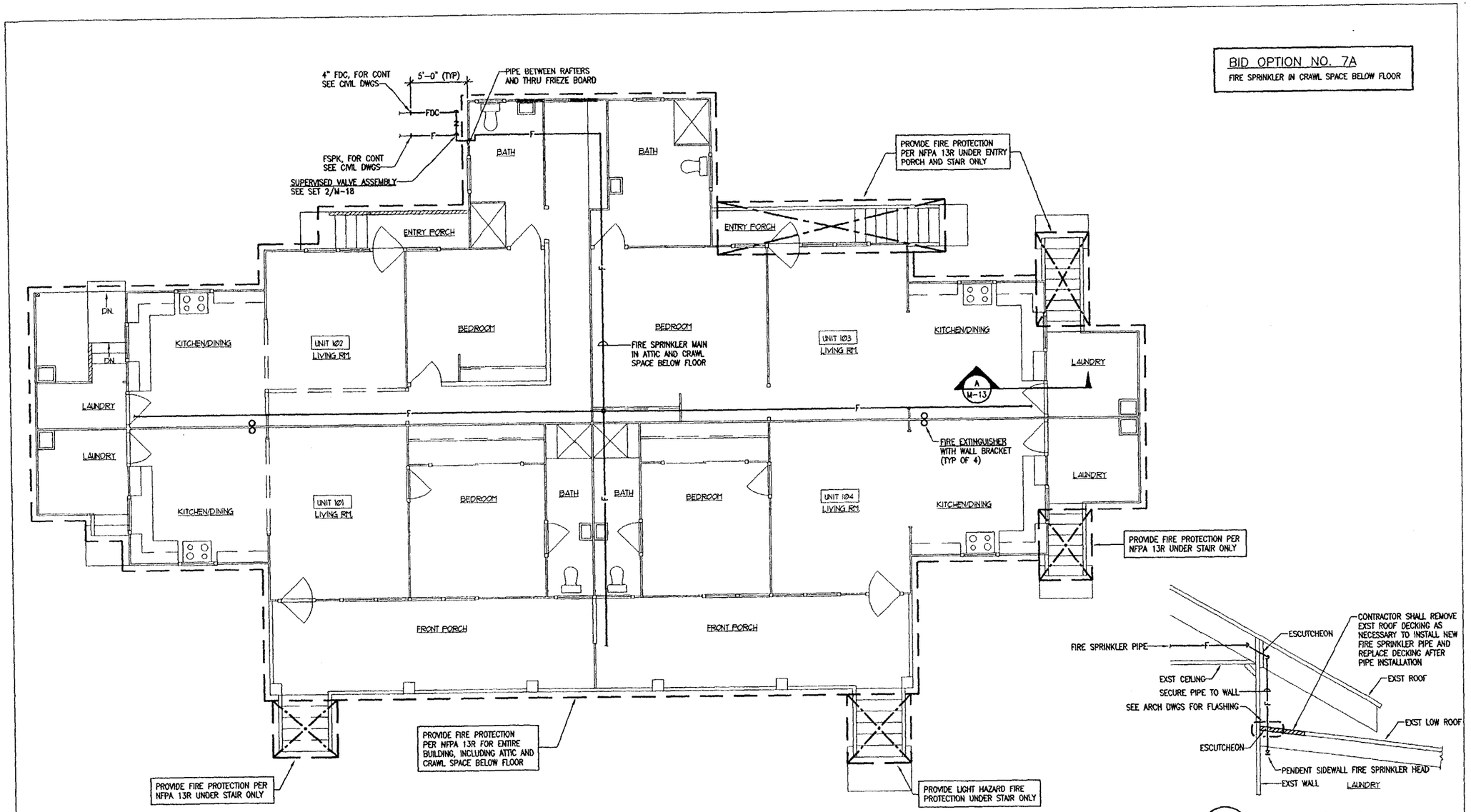

A / M-13 SECTION
SCALE: 1" = 1'-0"

1 / M-13 MCVEIGH NO. 12 FIRE PROTECTION FLOOR PLAN
SCALE: 1/4" = 1'-0"

SOUTH
EAST WEST
TRUE NORTH
REFERENCE NORTH

LOUIS T. L. CHENG
LICENSED PROFESSIONAL ENGINEER
No. 3884-M
HAWAII, U.S.A.
04/30/04
Expiration Date of the License

THIS WORK WAS PREPARED BY ME OR UNDER MY SUPERVISION

DESIGNED	SUB SHEET NO.	TITLE OF SHEET	DRAWING NO.
JK		MCVEIGH NO. 12 FIRE PROTECTION FLOOR PLAN	491 / 41,016
DRAWN KY	M-13	BID OPTION #7	PKG. NO. KALA 20-5
TECH. REVIEW LC		Kalaupapa National Historical Park	SHEET 54 OF 71
DATE 2/21/03			

C:\Proj\012\M-13.dwg, 2/21/2003 4:46:34 PM

55/72

BID OPTION NO. 8A
FIRE SPRINKLER IN CRAWL SPACE BELOW FLOOR

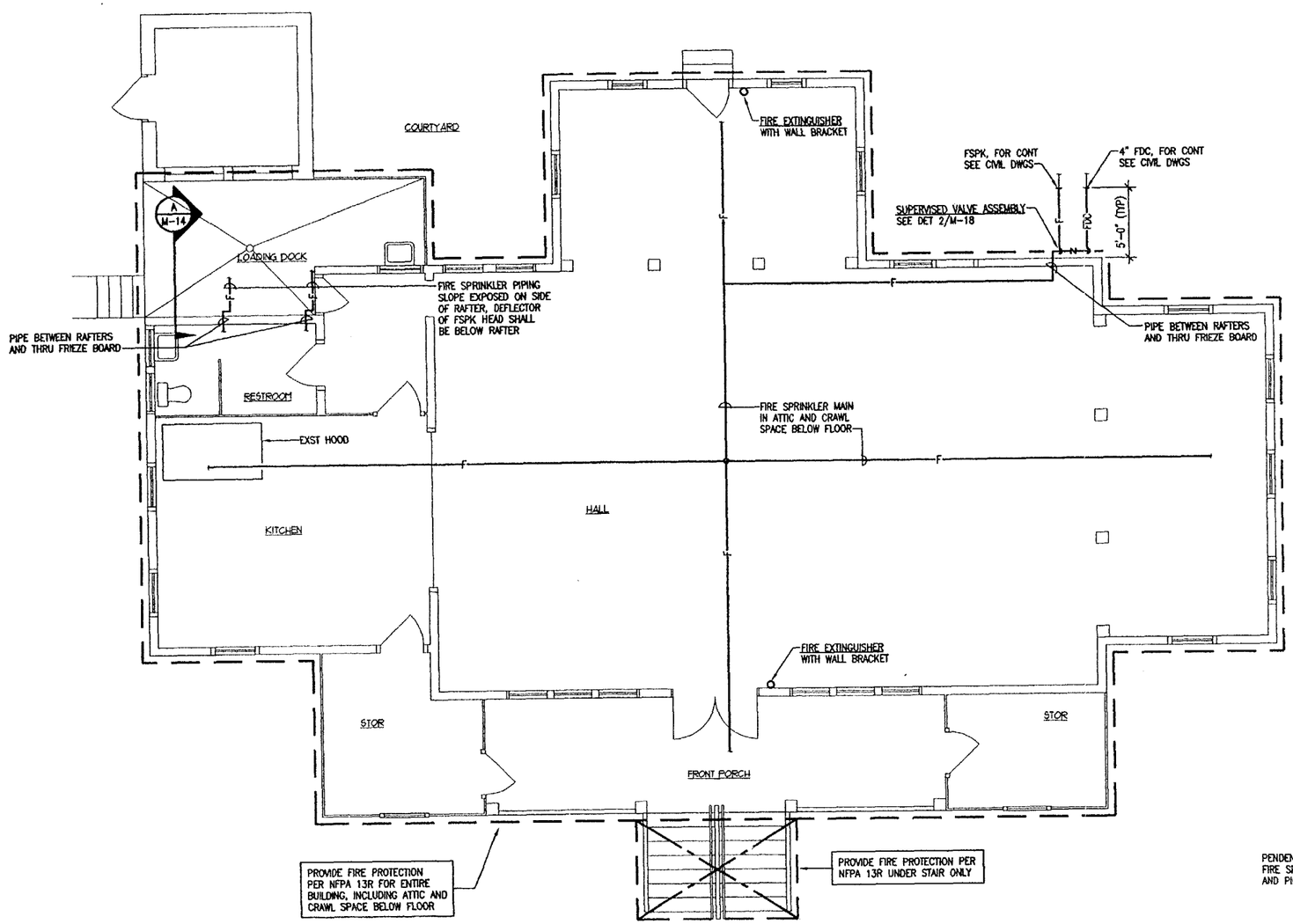

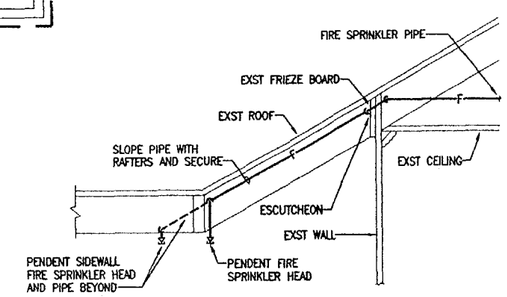

A / M-14 SECTION
SCALE: 1" = 1'-0"

1 / M-14 MCVEIGH NO. 23 FIRE PROTECTION FLOOR PLAN
SCALE: 1/4" = 1'-0"

TRUE NORTH
REFERENCE NORTH
EAST
SOUTH
WEST

LOUIS T. L. CHENG
LICENSED PROFESSIONAL ENGINEER
No. 3584-M
HAWAII, U.S.A.

04/30/04
Expiration Date of the License

THIS WORK WAS PREPARED BY ME OR UNDER MY SUPERVISION

DESIGNED	SUB SHEET NO.	TITLE OF SHEET	DRAWING NO.
JK	M-14	MCVEIGH NO. 23 FIRE PROTECTION FLOOR PLAN BID OPTION #8 Kalaupapa National Historical Park	491 41,016
DRAWN: KY			PKG NO. EAA 211-5
TECH. REVIEW: LC			SHEET 55 OF 71
DATE: 2/21/03			

T:\PROJ\0121\022103

C:\Proj\0121\0-14.dwg, 2/21/2003 4:41:00 PM

56/72

BID OPTION NO. 9A
FIRE SPRINKLER IN CRAWL SPACE BELOW FLOOR

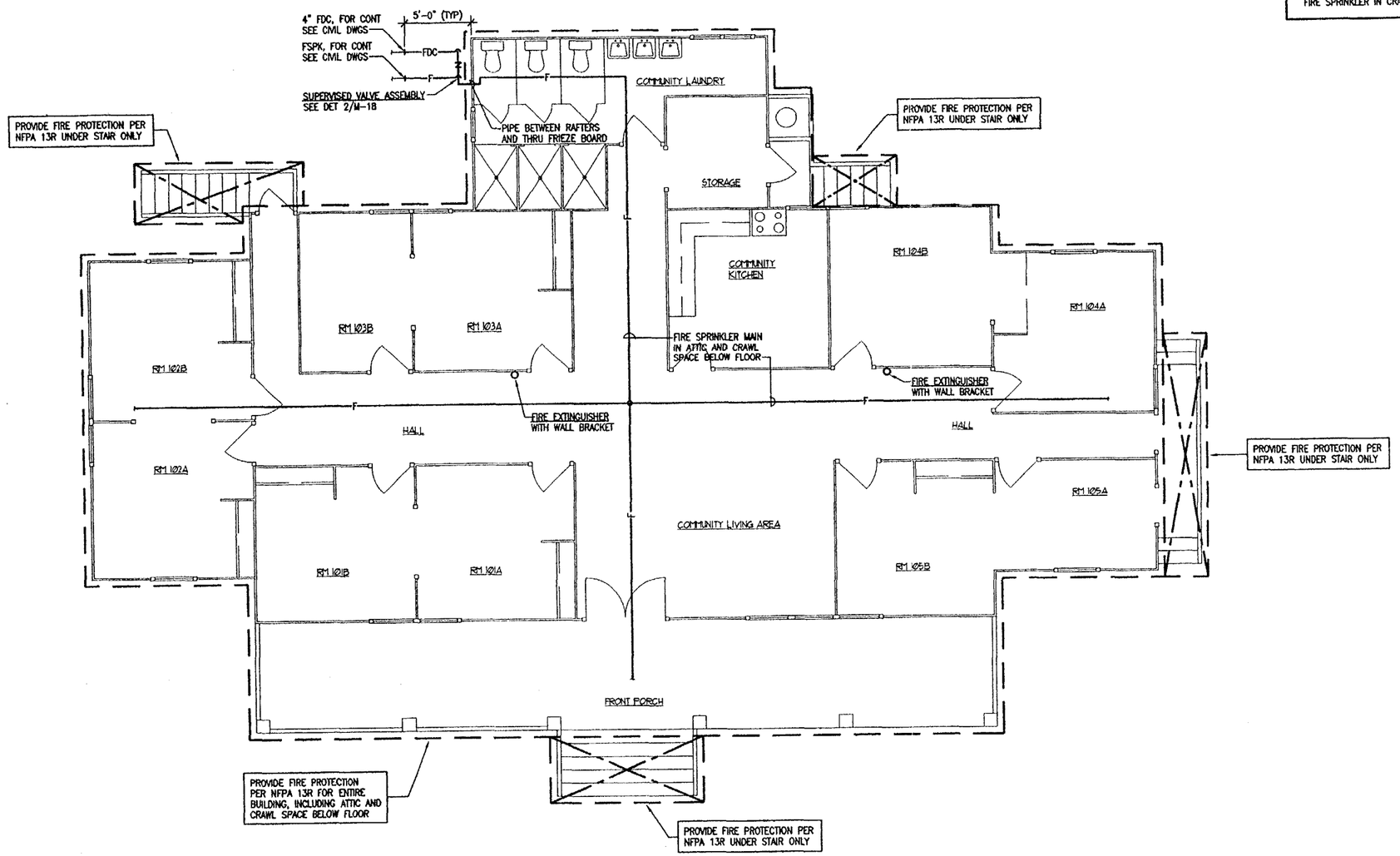

1 / M-15 MCVEIGH NO. 28 FIRE PROTECTION FLOOR PLAN
SCALE: 1/4" = 1'-0"

TRUE NORTH
REFERENCE NORTH
WEST EAST
SOUTH

LOUIS T. L. CHENG
LICENSED PROFESSIONAL ENGINEER
No. 3684-U
HAWAII, U.S.A.

04/30/04
Expiration Date of the License

THIS WORK WAS PREPARED BY ME OR UNDER MY SUPERVISION

DESIGNED: JK	SUB SHEET NO.	TITLE OF SHEET	DRAWING NO. 491 / 41,016
DRAWN: KY	M-15	MCVEIGH NO. 28 FIRE PROTECTION FLOOR PLAN	PKG. NO. 66A 21-5
TECH. REVIEW: LC		BID OPTION #9	SHEET 56 OF 71
DATE: 2/21/03		Kalaupapa National Historical Park	

\\CVPROJ\0121\022103

C:\Proj\0121\M-15.dwg, 2/21/2003 4:41:25 PM

57/72

BID OPTION NO. 10A
FIRE SPRINKLER IN CRAWL SPACE BELOW FLOOR

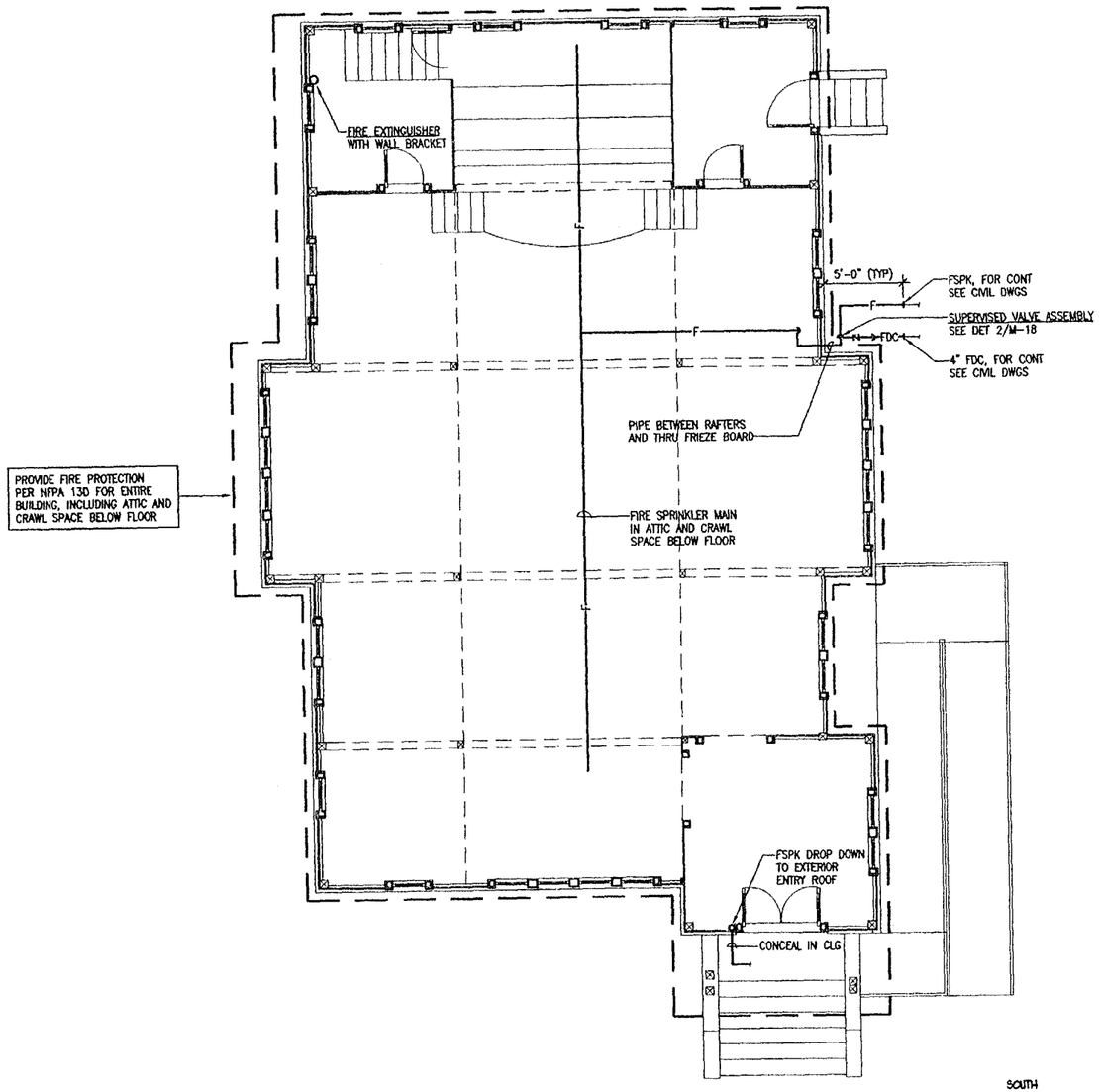

1 / M-16 BUILDING NO. 286 FIRE PROTECTION FLOOR PLAN
SCALE: 1/4" = 1'-0"

LOUIS T. L. CHENG
LICENSED PROFESSIONAL ENGINEER
No. 3884-H
HAWAII, U.S.A.

04/30/04
Expiration Date of the License

THIS WORK WAS PREPARED BY ME OR UNDER MY SUPERVISION

DESIGNED: JK	SUB SHEET NO.	TITLE OF SHEET	DRAWING NO. 491 / 41,016
DRAWN: KY	M-16	BUILDING NO. 286 FIRE PROTECTION FLOOR PLAN BID OPTION #10 Kalaupapa National Historical Park	PKG. NO. 6444 / 211-3
TECH. REVIEW: LC			SHEET 57 OF 71
DATE: 2/12/03			

\\SCPROJ\DIV21\K221103

58/72

BID OPTION NO. 11A
FIRE SPRINKLER IN CRAWL SPACE BELOW FLOOR

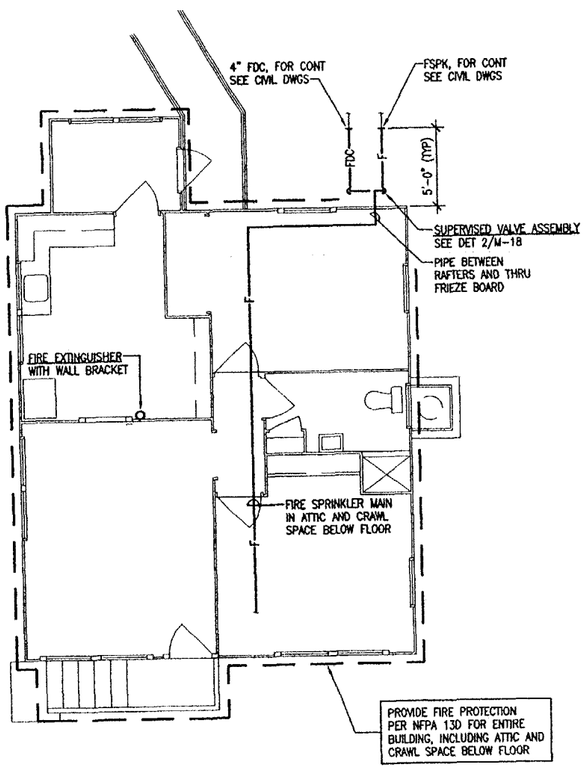

1 / M-17 BUILDING NO. 281 FIRE PROTECTION FLOOR PLAN
SCALE: 1/4" = 1'-0"

TRUE NORTH
REFERENCE NORTH
EAST
SOUTH
WEST

LOUIS T. L. CHENG
LICENSED PROFESSIONAL ENGINEER
No. 3684-M
HAWAII, U.S.A.

04/30/04
Expiration Date of the License

THIS WORK WAS PREPARED BY ME OR UNDER MY SUPERVISION

DESIGNED: JK	SUB SHEET NO.	TITLE OF SHEET	DRAWING NO. 491 / 41,016
DRAWN: KY	M-17	BUILDING NO. 281 FIRE PROTECTION FLOOR PLAN BID OPTION #11 Kalaupapa National Historical Park	PKG. NO. KALA 211-9
TECH. REVIEW: LC			SHEET 58 OF 71
DATE: 2/21/03			

X:\PROJ\02\021\022103

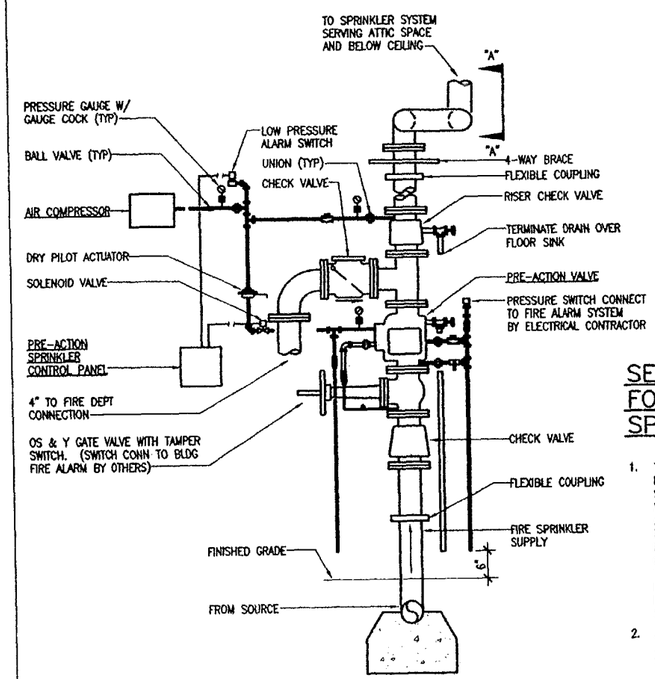

NOTE:

THE PRE-ACTION SPRINKLER RISER DETAIL IS IN SCHEMATIC FORM ONLY; THE CONTRACTOR SHALL PROVIDE AND INSTALL ALL NECESSARY VALVES, TRIM, AND COMPONENTS TO ENSURE THAT THE PRE-ACTION SYSTEM OPERATES PER NFPA 13 AND MANUFACTURER'S RECOMMENDATION.

1 / M-18 PRE-ACTION SPRINKLER RISER DETAIL

NOT TO SCALE (CURATORIAL FACILITY ONLY)

SEQUENCE OF OPERATION FOR PRE-ACTION FIRE SPRINKLER SYSTEM

1. THE PRE-ACTION FIRE SPRINKLER SYSTEM SHALL BE DOUBLE INTERLOCK TYPE. THE PRE-ACTION FIRE SPRINKLER PANEL SHALL OPEN THE PRE-ACTION VALVE WHEN AIR PRESSURE IN PIPING DROPS BELOW 3 PSI AND AT THE SAME TIME A SIGNAL IS RECEIVED FROM BUILDING FIRE ALARM SYSTEM THAT THE CROSS-ZONED FIRE DETECTION SYSTEM OR ELECTRICAL PULL STATION OPERATES. ONLY ONE CONDITION OCCURRING SHALL NOT TRIP OPEN THE PRE-ACTION VALVE. WHEN THE PRE-ACTION VALVE OPENS, WATER FLOWS INTO THE PIPING SYSTEM AND DISCHARGES FROM ANY OPENED SPRINKLERS.
2. AIR COMPRESSOR SHALL AUTOMATICALLY MAINTAIN THE AIR PRESSURE IN SPRINKLER PIPE. AIR COMPRESSOR SHALL CUT IN AT 10 PSI OR LOWER, AND CUT OUT AT 15 PSI OR HIGHER.
3. WHEN THE AIR PRESSURE DROPS BELOW 7 PSI, THE PRE-ACTION FIRE SPRINKLER PANEL SHALL ACTIVATE BOTH AUDIO AND VISUAL TROUBLE SIGNALS.
4. PULLING OF THE MANUAL PULL STATION AT THE RISER SHALL TRIP OPEN THE PRE-ACTION VALVE.

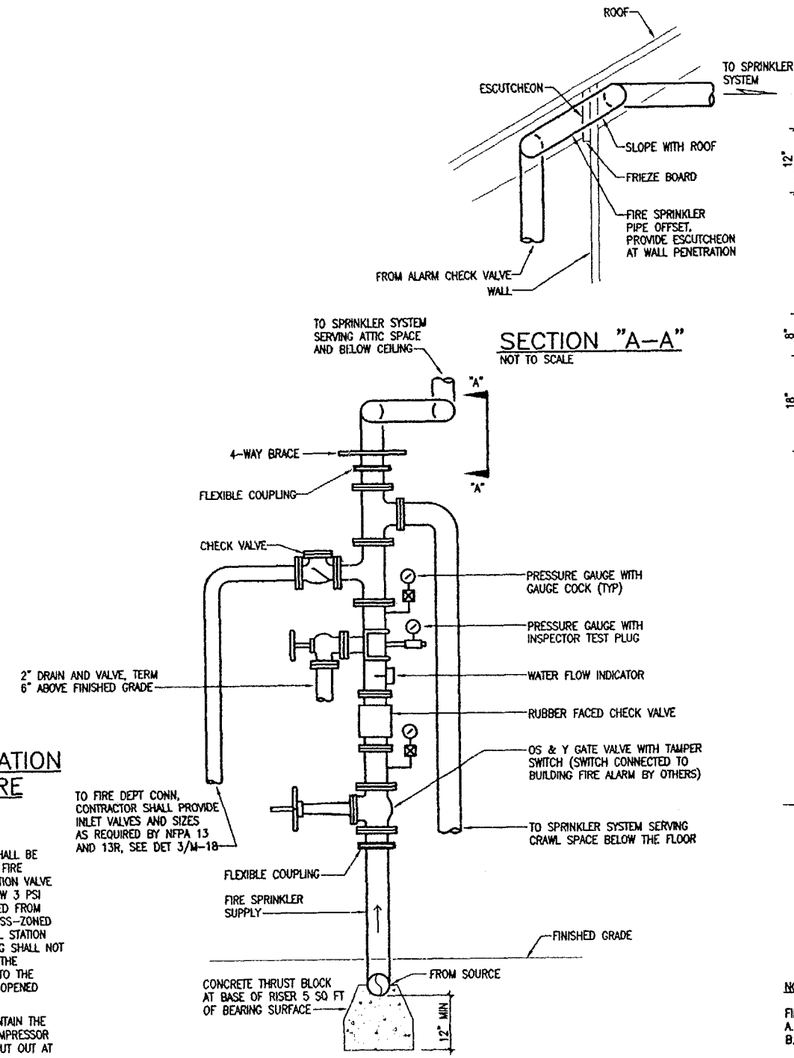

2 / M-18 FIRE SPRINKLER SUPERVISED VALVE ASSEMBLY

NOT TO SCALE

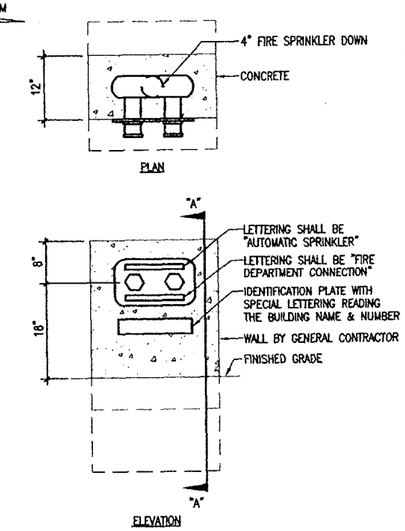

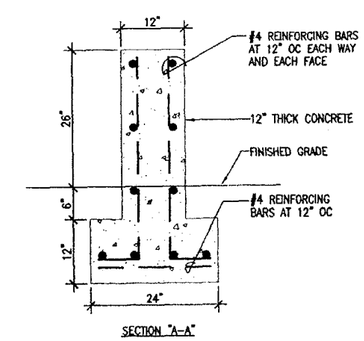

NOTE:

FIRE DEPARTMENT CONNECTION
A. 4" x 2-1/2" x 2-1/2" INLET CONNECTIONS PER NFPA 13.
B. 2-1/2" INLET CONNECTION PER NFPA 13R.

3 / M-18 TYPICAL FIRE DEPARTMENT CONNECTION DETAIL

NOT TO SCALE

LOUIS T. L. CHENG
LICENSED PROFESSIONAL ENGINEER
No. 3684-M
HAWAII, U.S.A.

04/30/04
Expiration Date of the License

THIS WORK WAS PREPARED BY ME OR UNDER MY SUPERVISION

DESIGNED: JK	SUB SHEET NO.	TITLE OF SHEET	DRAWING NO. 491 / 41,016
DRAWN: KY	M-18	DETAILS	PKG. NO. KALA 211-5
TECH. REVIEW: LC		Kalaupapa National Historical Park	SHEET 59 OF 71
DATE: 2/21/03			

TCP/PROJ/012/022103

C:\Proj\012\M-18.dwg, 2/21/2003 4:42:35 PM

60/72

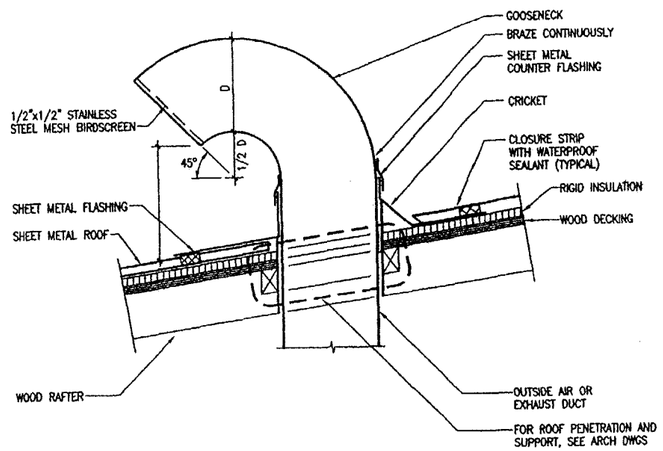

1 M-19 GOOSENECK ON SLOPED ROOF DETAIL
NOT TO SCALE

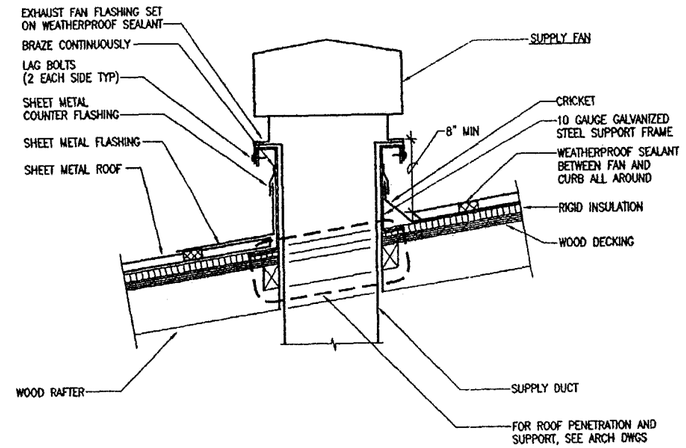

2 M-19 TYPICAL FAN ON ROOF SUPPORT DETAIL
NOT TO SCALE

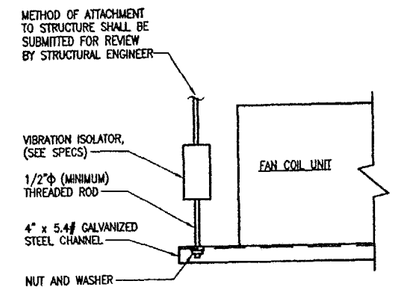

3 M-19 TYPICAL FCU HANGER DETAIL
NOT TO SCALE

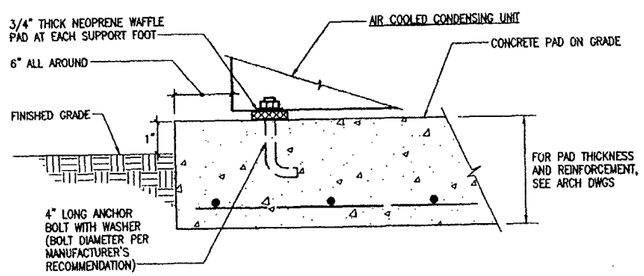

4 M-19 AIR COOLED CONDENSING UNIT MOUNTING DETAIL
NOT TO SCALE

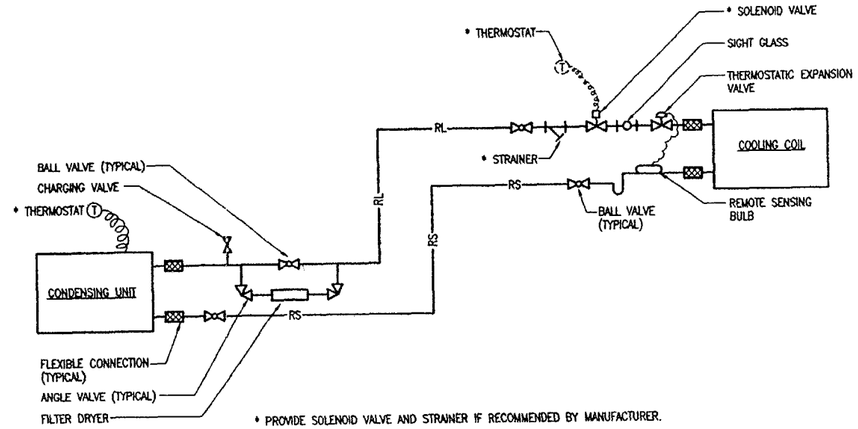

* PROVIDE SOLENOID VALVE AND STRAINER IF RECOMMENDED BY MANUFACTURER.

5 M-19 SCHEMATIC REFRIGERANT PIPING DIAGRAM
NOT TO SCALE

LOUIS T. L. CHENG
LICENSED PROFESSIONAL ENGINEER
No. 3884-M
HAWAII, U.S.A.

04/30/04
Expiration Date of the License

THIS WORK WAS PREPARED BY ME OR UNDER MY SUPERVISION

DESIGNED: JK	SUB SHEET NO.	TITLE OF SHEET	DRAWING NO. 491 / 41,016
DRAWN: KY	M-19	DETAILS	PKG. NO. KALA 2n-5
TECH. REVIEW: LC		Kalaupapa National Historical Park	SHEET 60 OF 71
DATE: 2/21/03			

C:\PROJ\012\V22103

C:\Proj\012\M-19.dwg, 2/21/2003 4:42:54 PM

61/72

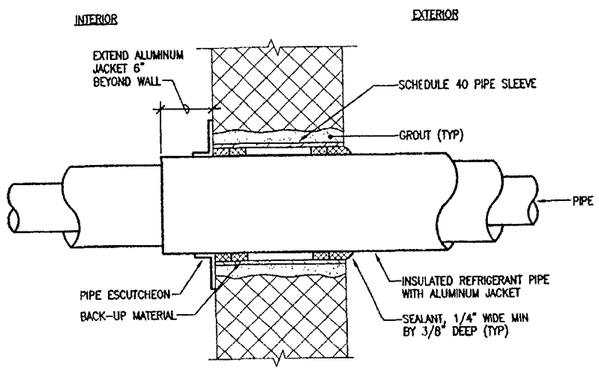

NOTE:

INSTALLATION OF UNINSULATED PIPE SIMILAR.

1 / M-20 INSULATED PIPE THRU WALL DETAIL

NOT TO SCALE

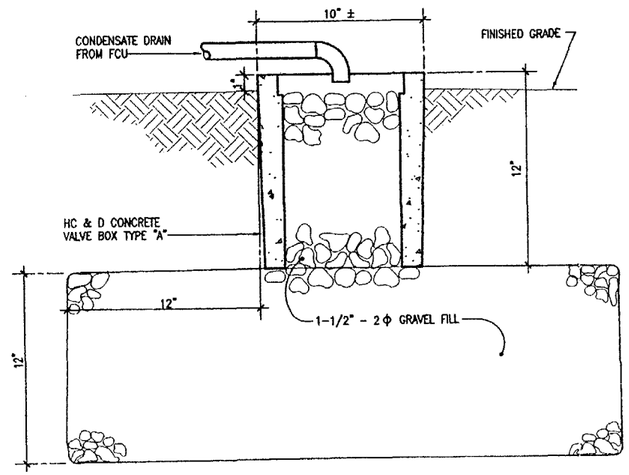

2 / M-20 TYPICAL DRYWELL DETAIL

NOT TO SCALE

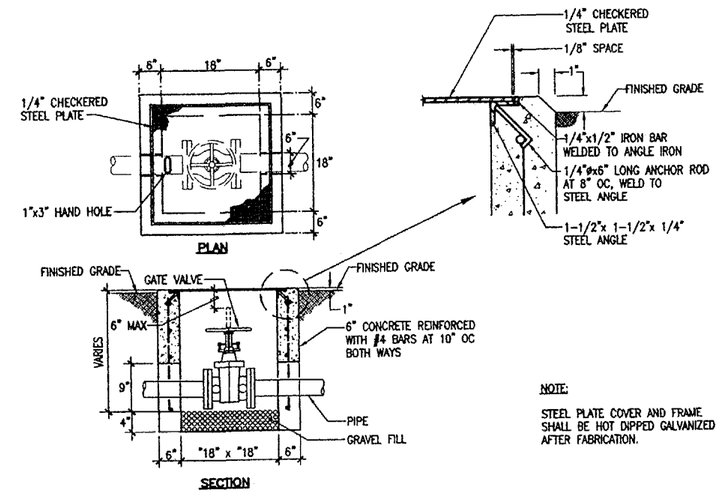

NOTE:

STEEL PLATE COVER AND FRAME SHALL BE HOT DIPPED GALVANIZED AFTER FABRICATION.

3 / M-20 TYPICAL VALVE BOX DETAIL

NOT TO SCALE

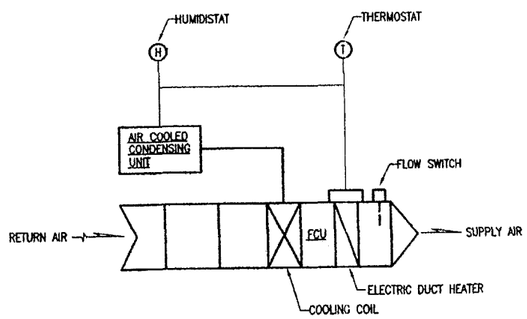

NOTES:

1. HUMIDISTAT SHALL CONTROL AIR COOLED CONDENSING UNIT TO MAINTAIN ROOM HUMIDITY.
2. THERMOSTAT SHALL CONTROL BOTH COOLING COIL & ELECTRIC DUCT HEATER TO MAINTAIN ROOM TEMPERATURE.
3. INTERLOCK ELECTRIC DUCT HEATER WITH AIR FLOW SWITCH.

4 / M-20 TEMPERATURE AND HUMIDITY CONTROLS

NOT TO SCALE

LOUIS T. L. CHENG
LICENSED PROFESSIONAL ENGINEER
No. 3684-M
HAWAII, U.S.A.

04/30/04
Expiration Date of the License

THIS WORK WAS PREPARED BY ME OR UNDER MY SUPERVISION

DESIGNED	SUB SHEET NO.	TITLE OF SHEET	DRAWING NO.
JK			491 / 41,016
DRAWN: KY		DETAILS	PKG. NO. KALA 211-2
TECH. REVIEW: LC	M-20	Kalaupapa National Historical Park	SHEET 61 OF 71
DATE: 2/21/03			

Y:\CVPROJ\VIZ\V022103

C:\Proj\012\M-20.dwg, 2/21/2003 4:43:06 PM

62/72

FAN COIL UNIT SCHEDULE

UNIT NO	MANUFACTURER AND MODEL	LOCATION	SENSIBLE COOL CAP BTU/HR	LATENT COOL CAP BTU/HR	TOTAL COOL CAP BTU/HR	SUPPLY AIR CFM	OUTSIDE AIR CFM	COIL FACE VELOCITY FPM	NO ROWS	FINS PER INCH	ENT AIR TEMP °F		REFR TYPE	SATURATED SUCTION TEMP °F	FILTER			EXTERNAL SP INCHES	FAN RPM	HP	VOLTS	Φ	OPR WT POUNDS	REMARKS
											DB	WB			TYPE	EFF	AREA SQ FT							
FCU-1	CARRIER FC4BN030	STORAGE	16,800	6000	22,800	645	150	217	3	14.5	80.0	66.5	R-22	40	1" TA	25%	2.45	0.40	–	1/4	230	1	120	

AIR COOLED CONDENSING UNIT SCHEDULE

UNIT NO	MANUFACTURER AND MODEL	LOCATION	COOLING CAPACITY TONS	AMBIENT AIR TEMP °F	REFR TYPE	SATURATED SUCTION TEMP °F	TOTAL CFM	FAN MOTOR			COMPRESSORS					CAPACITY REDUCTION PERCENT	OPR WT POUNDS	REMARKS
								NO	HP	FLA EACH	NO	FLA EACH	RLA EACH	VOLTS	Φ			
ACCU-1	CARRIER 38HDC024	EXTERIOR	1.9	95	R-22	40	1720	1	1/8	0.7	1	62.5	12.9	230	1	–	155	

FAN SCHEDULE

UNIT NO	MANUFACTURER AND MODEL	LOCATION	SERVICE	TYPE	CFM	SP INCHES	WHEEL DIAMETER INCHES	TIP SPEED FPM	OUTLET VELOCITY FPM	DRIVE	FAN RPM	HP	VOLTS	Φ	SONES	OPR WT POUNDS	REMARKS
SF-1	GREENHECK RSFP-90	ROOF	MAKE-UP AIR	CENTRIFUGAL	960	0.375	–	1699	1043	BELT	721	1/4	115	1	8.1	130	WITH 1" THICK THROWAWAY FILTERS, INTERLOCK WITH EF-2
EF-2	GREENHECK SP-258	KITCHENETTE	GENERAL EXHAUST	CEILING CENTRIFUGAL	705	0.125	–	2880	1932	DIRECT	1467	285 WATTS	115	1	9.5	35	WITH SPEED CONTROLLER MOUNTED ON INSIDE OF HOUSING, INTERLOCK WITH SF-1
EF-3	GREENHECK SP-226	TOILET	TOILET EXHAUST	CEILING CENTRIFUGAL	255	0.125	–	1682	1835	DIRECT	952	81 WATTS	115	1	3.0	25	WITH SPEED CONTROLLER MOUNTED ON INSIDE OF HOUSING

LOUIS T. L. CHENG
LICENSED PROFESSIONAL ENGINEER
No. 3684-M
HAWAII, U.S.A.

04/30/04
Expiration Date of the License

THIS WORK WAS PREPARED BY ME OR UNDER MY SUPERVISION

DESIGNED	SUB SHEET NO.	TITLE OF SHEET	DRAWING NO.
JK	M-21	EQUIPMENT SCHEDULES	491 / 41,016
DRAWN KY			PKG. NO. KAHA 241-S
TECH. REVIEW LC		Kalaupapa National Historical Park	SHEET 62 OF 71
DATE 2/21/03			

03120\03120CADA\CL1

63/72

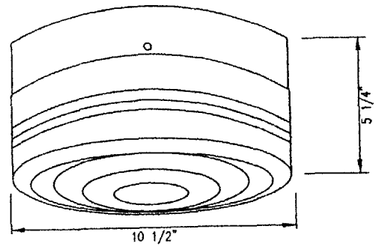

STEEL CONSTRUCTION, WHITE FINISH

WHITE GLASS WITH CLEAR CIRCULAR PRISM BOTTOM

THREE INSTALLED FITTER SCREWS TO REATIN THE GLASS

PROVIDE 2–15W COMPACT FLUORESCENT SCREW IN TYPE, PHILIPS MARATHON LAMP 046677–37104–7 OR APPROVED EQUAL.

LUMINAIRE TYPE "A"

DEMOLITION NOTES

1. EXISTING PLANS DO NOT INDICATE COMPLETE EXISTING WIRING CONDITIONS. CONTRACTOR SHALL VERIFY EXISTING CONDITIONS PRIOR TO START OF WORK.
2. BEFORE ANY WIRING IS CUT, CONTRACTOR SHALL VERIFY USAGE OF WIRING TO BE CUT TO ASSURE THAT SERVICES REQUIRED ARE NOT DISCONTINUED. PROVIDE ADDITIONAL WIRING DEVICES AND OTHER ACCESSORIES TO ENSURE CONTINUITY OF SERVICE TO OTHER PARTS OF INSTALLATION TO REMAIN.
3. REMOVE ALL EXISTING WIRING NOT TO REMAIN IN SERVICE.
4. REMOVE ALL CONDUITS NO LONGER REQUIRED.
5. PHASE WORK TO ASSURE CONTINUITY OF ELECTRICAL, TELEPHONE AND SIGNAL SERVICES TO PARTS OF FACILITIES THAT WILL REMAIN IN USE.
6. REMOVE ALL EXISTING LIGHTING FIXTURES, RECEPTACLES AND SWITCHES INDICATED TO BE REMOVED OR NO LONGER REQUIRED. BLANK OUTLETS AND PLUG ALL HOLES IN BOXES AND CABINETS.
7. DELIVER ALL SALVAGEABLE MATERIAL AS DETERMINED BY ARCHITECT AT NO ADDITIONAL COST TO OWNER. PACK MATERIAL IN BOXES. COIL ALL CABLES AND TIE.
8. ABANDON CONDUITS BELOW GRADE NO LONGER REQUIRED. PULL OUT ALL WIRES IN ABANDONED CONDUITS.
9. RETURN ALL REMOVED LIGHT FIXTURES TO OWNER. DELIVER ITEMS AND STACK IN LOCATION AS DETERMINED BY ARCHITECT.

ELECTRICAL SYMBOLS

- EXISTING FLOOD LIGHT
- EXISTING CEILING LUMINAIRE TO BE REMOVED
- NEW CEILING LUMINAIRE
- EXISTING WALL LUMINAIRE TO BE REMOVED
- NEW WALL LUMINAIRE
- CEILING FLUORESCENT LUMINAIRE
- WALL FLUORESCENT LUMINAIRE
- WALL FLUORESCENT COVE LUMINAIRE
- EMERGENCY LIGHT
- CEILING EXIT LIGHT, BLACKENED SEGMENTS INDICATES ILLUMINATED SIDES AND ARROWS INDICATES DIRECTION
- WALL EXIT LIGHT, BLACKENED SEGMENT INDICATES ILLUMINATED SIDE AND ARROW INDICATES DIRECTION
- EXISTING SWITCH TO BE REMOVED
- S — NEW SWITCH, 1P20A, +4'–0"
- S_3 — NEW SWITCH, 3W20A, +4'–0"
- EXISTING DUPLEX CONVENIENCE OUTLET TO BE REMOVED
- NEW DUPLEX CONVENIENCE OUTLET, 3W20A, GROUNDING TYPE, +16" UNLESS OTHERWISE NOTED
- DUPLEX CONVENIENCE OUTLET, 3W20A, GROUND FAULT INTERRUPTER TYPE, +16" UNLESS OTHERWISE NOTED
- FLOOR OUTLET
- RANGE OUTLET, 3W50A, 250 VOLTS, +16"
- EXISTING SPECIAL OUTLET TO BE REMOVED
- NEW SPECIAL OUTLET, SIZE AND RATING AS INDICATED
- EXISTING EQUIPMENT CONNECTION TO BE REMOVED
- E — NEW EQUIPMENT CONNECTION
- EXISTING WATER HEATER CONNECTION TO BE REMOVED
- H — NEW WATER HEATER CONNECTION
- EXISTING WALL JUNCTION BOX TO BE REMOVED
- J — NEW WALL JUNCTION BOX, 4–11/16" SQUARE MINIMUM
- J — JUNCTION BOX, CEILING, 4–11/16" SQUARE MINIMUM
- J — JUNCTION BOX, LARGE
- EXISTING PANELBOARD TO BE REMOVED
- NEW PANELBOARD
- P — EXISTING HEAT PUMP
- EXISTING TELEPHONE OUTLET
- TELEPHONE OUTLET, +16"
- CAT5 DATA OUTLET, +16"
- TELEPHONE CABINET
- T — TIME SWITCH
- F — NEW FIRE ALARM MANUAL STATION, +48"
- F — FIRE ALARM AUDIO/VISUAL SIGNAL
- SD — FIRE ALARM AUTOMATIC SMOKE DETECTOR WITH AUDIBLE ALARM
- F — NEW FIRE ALARM VISUAL SIGNAL, +80"
- FIRE ALARM PANEL
- FS — FLOW SWITCH PROVIDED BY OTHERS, CONNECTED BY ELECTRICAL
- TS — TAMPER SWITCH PROVIDED BY OTHERS, CONNECTED BY ELECTRICAL
- T — TRANSFORMER
- EXISTING SAFETY SWITCH TO BE REMOVED
- SAFETY SWITCH
- M — MOTOR OUTLET
- MOTOR CONTROLLER
- WP — WEATHERPROOF
- A — LUMINAIRE DESIGNATION, TYPE "A" INDICATED
- SYSTEM SMOKE DETECTOR
- WIRING IN EXISTING RACEWAY
- WIRING IN EXISTING RACEWAY TO BE REMOVED
- EOH — EXISTING OVERHEAD WIRING
- OH — NEW OVERHEAD WIRING
- WIRING IN EXPOSED RACEWAY
- WIRING IN RACEWAY CONCEALED IN FLOOR OR BELOW GRADE
- WIRING IN RACEWAY CONCEALED IN WALL OR CEILING
- WIRING IN FLEXIBLE RACEWAY

NOTES:
1. ANY CIRCUIT WITH NO FURTHER DESIGNATION INDICATES A TWO WIRE CIRCUIT. CIRCUITS WITH ADDITIONAL WIRES ARE INDICATED AS FOLLOWS: , 3 WIRES: , 4 WIRES, ETC.
2. GROUND WIRE PER NATIONAL ELECTRICAL CODE INDICATED AS FOLLOWS: .
3. ALL EXPOSED CONDUIT AND BOXES SHALL BE PAINTED TO MATCH ADJACENT WALL OR CEILING SURROUNDING.

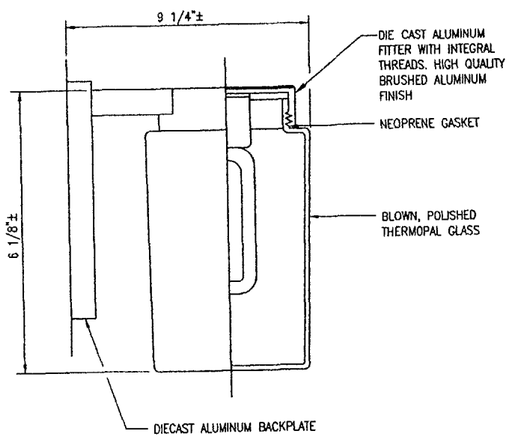

LUMINAIRE TYPE "B" (2–13W COMPACT FLUORESCENT)

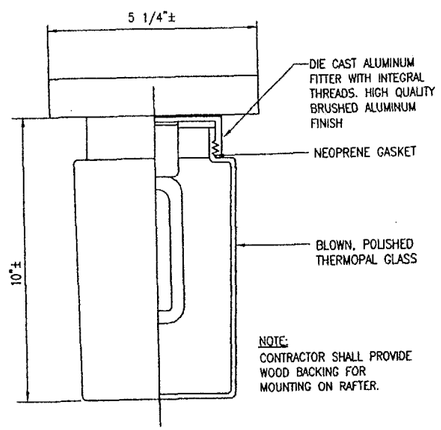

LUMINAIRE TYPE "C" (1–26W COMPACT FLUORSCENT)

WHITE GLASS WITH CLEAR RIBBED WINDOW

GLASS INSTALLED WITH THUMB SCREWS

POLISHED CHROME CANOPY

A PULL CHAIN SWITCH AND GCO INSTALLED

UL–CUL LISTED

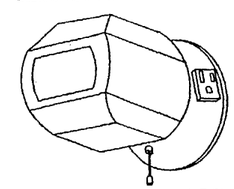

PROVIDE 1–15W COMPACT FLUORESCENT SCREW IN TYPE, PHILIPS MARATHON LAMP 046677–37104–7 OR APPROVED EQUAL

LUMINAIRE TYPE "D"

SEALED BATTERY SPECIFICALLY DESIGNED FOR EMERGENCY LIGHTING. SOLID–STATE FULLY AUTOMATIC THREE–RATE CHARGER FOR NICKEL CADMIUM BATTERY AND TWO–RATE HIGH/LOW CHARGER FOR LEAD CALCIUM OR LEAD ACID SEALED BATTERIES

3/C #16 SO CORD SET (HARD WIRE TO CIRCUIT)

VOLTMETER

MINIMUM 0.032" THICK STEEL HOUSING WITH BAKED ENAMEL PAINTED FINISH (BROWN OR BEIGE), OR NON–METALLIC PLASTIC HOUSING WITH DECORATIVE WOOD GRAIN FRONT PANEL ON EITHER HOUSING PROVIDE LOW VOLTAGE, DEEP DISCHARGE DISCONNECT

PROVIDE MINIMUM 0.032" THICK STEEL WALL MOUNTING SHELF OR MOUNTING BRACKETS OR HOLES IN HOUSING FOR MOUNTING UNIT ON WALL

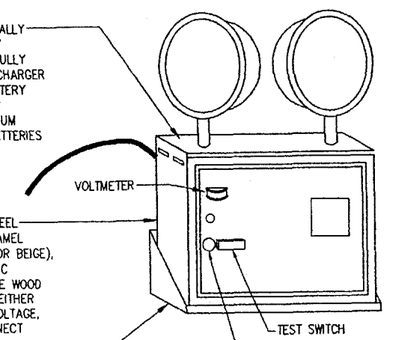

TEST SWITCH

"AC ON" PILOT LIGHT

2–25W LAMPS

LUMINAIRE TYPE "E"

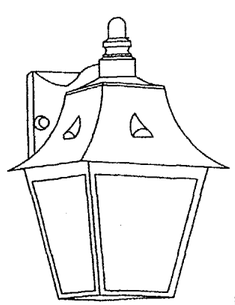

CAST ALUMINUM WALL LANTERN

MANSARD ROOF

SHATTER RESISTANT ACRYLIC CATHEDRAL PANELS

UL–CUL WET LOCATION LISTED

PROVIDE 1–15W COMPACT FLUORESCENT SCREW IN TYPE, PHILIPS MARATHON LAMP 046677–37104–7 OR APPROVED EQUAL, TO REPLACE 60W INCANDESCENT LAMP

LUMINAIRE TYPE "F"

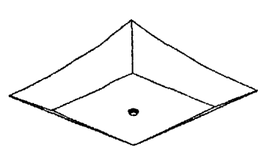

WHITE SQUARE BENT GLASS SHADE

SHADE IS SET OFF THE CEILING TO PROVIDE UP LIGHTING

WHITE PAINTED FINISH ON CANOPY

STEEL CONSTRUCTION

UL–CUL LISTED

PROVIDE 1–15W COMPACT FLUORESCENT SCREW IN TYPE, PHILIPS MARATHON LAMP 046677–37104–7 OR APPROVED EQUAL.

LUMINAIRE TYPE "G"

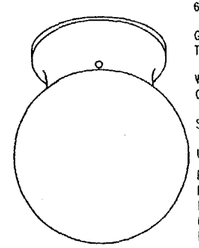

6" WHITE GLASS GLOBE

GLOBE HELD IN PLACE WITH THREE THUMB SCREWS

WHITE PAINTED FINISH ON CANOPY

STEEL CONSTRUCTION

UL–CUL LISTED

PROVIDE 1–15W COMPACT FLUORESCENT SCREW IN TYPE, PHILIPS MARATHON LAMP 046677–37104–7 OR APPROVED EQUAL

LUMINAIRE TYPE "H"

CLAYTON C. Y. PANG
LICENSED PROFESSIONAL ENGINEER
No. 4145–E
HAWAII, U.S.A.

THIS WORK WAS PREPARED BY ME OR UNDER MY SUPERVISION

SIGNATURE — EXPIRATION DATE OF THE LICENSE 04–30–04

DESIGNED: EI DRAWN: EI TECH. REVIEW: DATE: 02/21/03	SUB SHEET NO. E1.1	TITLE OF SHEET ELECTRICAL SYMBOLS, DEMOLITION NOTES, LUMINAIRE DETAILS Kalaupapa National Historical Park	DRAWING NO. 491 / 41,016 PKG. NO. KALA 2(1-5) SHEET 63 OF 71

64/72

SPUN BRASS BASE

UNFINSHED STEEL REFLECTOR

TRANSLUCENT WHITE GLASS ENCLOSURE

TWO ADVANCE H1Q28-TP-W

TWO PHILIPS PL-C 15MM/28W/27

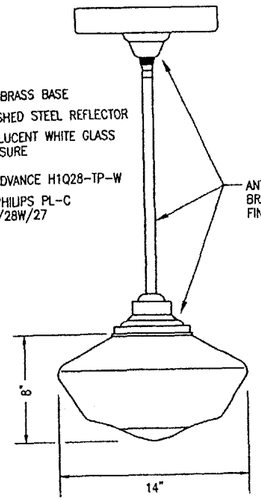

LUMINAIRE TYPE "I"

SPUN BRASS BASE

UNFINSHED STEEL REFLECTOR

TRANSLUCENT WHITE GLASS ENCLOSURE

PROVIDE 1-15W COMPACT FLUORESCENT SCREW IN TYPE, PHILIPS MARATHON LAMP 046677-37104-7 OR APPROVED EQUAL

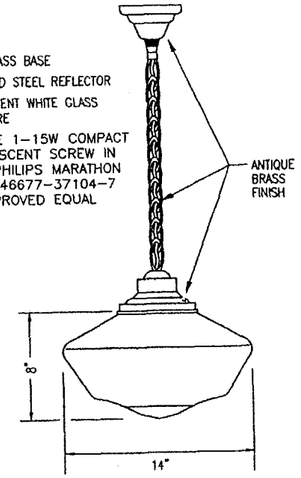

LUMINAIRE TYPE "J"

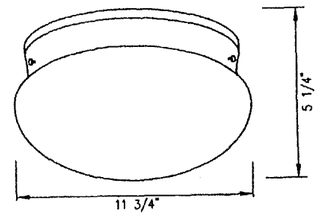

STEEL CONSTRUCTION, WHITE FINISH

WHITE GLASS FITTER WITH THUMB SCREWS

120V HPF BALLAST

TWO 13W TWIN COMPACT FLUORESCENT

LUMINAIRE TYPE "K"

CHANNEL ASSEMBLY: DIE-FORMED STEEL. REFLECTOR BACK PLATE SECURELY ATTACHED TO SOCKET. STRAP END PLATES. CBM, HPF SERIES BALLAST WITH THERMAL PROTECTION. WIRE WITH #AF WIRE WIRE SOLDERLESS CONNECTORS.

REFLECTOR BACK PLATE RIGIDIZED BY LONGITUDINAL BENDS WHICH FORM SIDES AND CLOSURE SUPPORT FLANGES.

NON-YELLOWING PLASTIC END CAP CEMENTED OR INTERLOCKED TO LENS ENCLOSURE.

0.125" THICK CLEAR VIRGIN ACRYLIC PLASTIC DIFFUSER WITH WELDED INJECTION MOLDED ENDS. CONICAL PRISMATIC LENS PATTERN ON BOTTOM EXTERIOR AND LINEAR PRISMS ON INTERIOR OF SIDES.

DIFFUSER FORMED WITH CONTINUOUS LIPS WHICH HOOK ONTO SUPPORT FLANGES OF CHANNEL ASSEMBLY. SWINGS FROM EITHER SIDE OF CHASSIS FOR RELAMPING.

CHANNEL COVER OF DIE-FORMED STEEL

FINISH: ALL STEEL SURFACES OTHER THAN PLATED PARTS ANTI-RUST PROTECTED WITH FIVE-STAGE PHOSPHATE TREATMENT. ALL METAL SURFACES EXCEPT PLATED PARTS SPRAYED WITH BAKED-ON WHITE ENAMEL. REFLECTOR REFLECTANCE - 85% MINIMUM.

120V, ELECTRONIC BALLAST

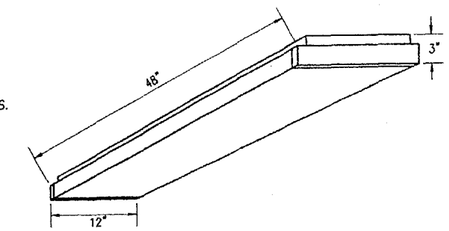

LUMINAIRE TYPE L - 2/32W T8 FLUORESCENT LAMPS

120 VOLTS

SURFACE MOUNTED

ALL METAL PARTS SHALL BE FINISHED WITH AN IRON PHOSPHATE COATING WITH RUST INHIBITOR PRIOR TO PAINTING AND SHALL BE FINISHED WITH A HIGH TEMPERATURE BAKED ENAMEL OF MINIMUM 90% REFLECTIVITY ON ALL LIGHT REFLECTING SURFACES

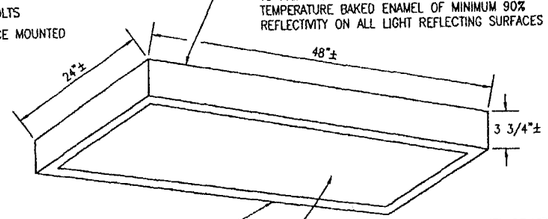

FIXTURE HOUSING, ENDS AND REFLECTORS ARE DIE-FORMED STEEL. DOORS OPEN FROM EITHER SIDE OR MAY BE COMPLETELY REMOVED WITHOUT TOOLS

BALLAST SHALL BE ELECTRONIC SOLID STATE TYPE

CLEAR, EXTRUDED LENS PANEL OF VIRGIN ACRYLIC WITH AN OVERALL PRISMATIC PATTERN PROVIDING MAXIMUM EFFICIENCY AND EXCELLANT BRIGHTNESS CONTROL. LIGHTWEIGHT AND DESTATICIZED FOR MINIMUM MAINTENANCE WITH KSH UVLITE PLUS OVERLAY AS A UV FILTER.

LUMINAIRE TYPE 'M' - 4 32W T8 FLUORESCENT LAMPS

COMPACT FLUORESCENT LAMP

PRE-INSTALLED BAR HANGERS

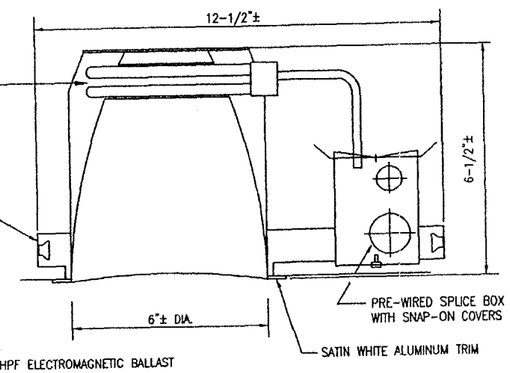

PRE-WIRED SPLICE BOX WITH SNAP-ON COVERS

SATIN WHITE ALUMINUM TRIM

ENCASED AND POTTED, HPF ELECTROMAGNETIC BALLAST

RUGGED POST-PAINTED STEEL FRAME WITH GALVANIZED STEEL J-BOX

THERMALLY PROTECTED AGAINST IMPROPER CONTACT WITH INSULATION AND APPROVED FOR THROUGH- BRANCH CIRCUIT WIRING.

LUMINAIRE TYPE 'N' - 2 26DTT

6063 T5 EXTRUDED ALUMINUM

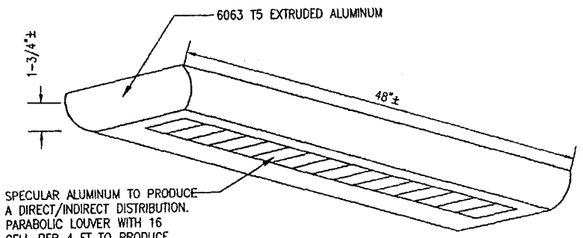

SPECULAR ALUMINUM TO PRODUCE A DIRECT/INDIRECT DISTRIBUTION. PARABOLIC LOUVER WITH 16 CELL PER 4 FT TO PRODUCE 55 DEGREE CUTOFF IN ALL ZONES

ELECTRONIC BALLAST, HPF

THERMOSETTING POLYESTER, ELECTROSTATICALLY APPLIED MEETING AAMA 603.8. FULL COLOR SPECTRUM, MEDIUM GLOSS. WHITE STANDARD.

MOUNTING BRACKETS ATTACH TO EXISTING STRUCTURE ANYWHERE BEHIND FIXTURE. FULLY ADJUSTABLE MOUNTING BRACKETS TO PROVIDE UP TO 1/8" WALL VARIANCE AND ALLOW FOR VERTICAL FIXTURE LEVELING.

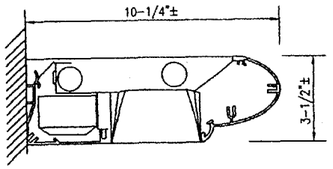

LUMINAIRE TYPE 'O' - 2 32WT8

FIBERGLASS HOUSING IS REINFORCED POLYESTER AND SELF-EXTINGUISHING PLASTIC OF A PERMANENT PEARL GRAY COLOR.

POLYURETHANE GASKETING IS FORMED IN THE HOUSING PROVIDING A CONTINUOUS SEAMLESS SEAL FOR THE DIFFUSER.

STURDY CAM LATCHES CLAMP DIFFUSER TIGHTLY FOR A POSITIVE SEAL BETWEEN HOUSING, GASKETING AND DIFFUSER.

FULL METAL LINER SECURED BY BRASS INTERNAL/EXTERNAL MOUNTING STUDS FOR POSITIVE GROUNDING.

BALLASTS ARE CBM/ETL CLASS P CERTIFIED SUITABLE TO +50°C.

PRESSURE LOCK LAMP HOLDERS.

U.L. LISTED FOR WET LOCATIONS.

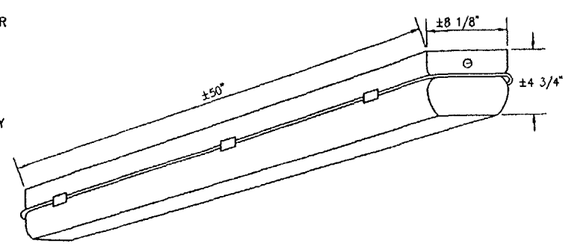

LUMINAIRE TYPE 'P' - 3 32W T8 FLUORESCENT LAMPS

COBBLESTONE TRIM

FAUX TIFFANY ART GLASS

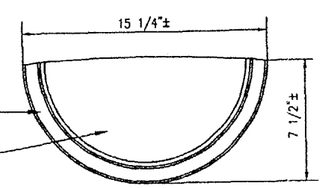

HPF ELECTRONIC BALLAST

ADA APPROVED

LUMINAIRE TYPE 'Q' - 1 26W QUAD

CLAYTON C. Y. PANG
LICENSED PROFESSIONAL ENGINEER
No. 4145-E
HAWAII, U.S.A.

THIS WORK WAS PREPARED BY ME OR UNDER MY SUPERVISION

SIGNATURE — EXPIRATION DATE OF THE LICENSE 04-30-04

DESIGNED: EI	SUB SHEET NO.	TITLE OF SHEET	DRAWING NO. 491 / 41,016
DRAWN: EI	EI.2	LUMINAIRE DETAILS	PKG. NO. KALA 211-5
TECH. REVIEW:		Kalaupapa National Historical Park	SHEET 64 OF 71
DATE: 02/21/03			

65/72

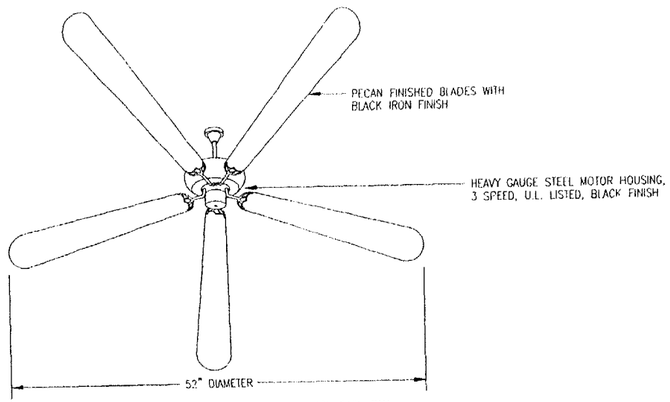

NOTE: FURNISH VARIABLE SPEED FAN SWITCH WITH EACH FAN.

LUMINAIRE TYPE 'R' – CEILING FAN

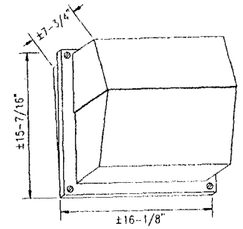

REAR HOUSING IS RUGGED, LIGHTWEIGHT, CORROSION-RESISTANT, DIE-CAST ALUMINUM. STAINLESS STEEL EXTERNAL HARDWARE INCLUDES SLOTTED AND TAMPER-PROOF FASTENERS

REFLECTOR IS WHITE THERMOSET POLYESTER POWDER, ELECTROSTATICALL APPLIED. FRONT HOUSING AND REFLECTOR ARE ONE-PIECE, INJECTION-MOLDED UV-STABILIZED POLYCARBONATE DARK-BRONZE FINISH.

HYDROFORMED SPECULIAR REFLECTOR

FLUTED CLEAR PRISMATIC LENS

REFRACTOR IS SEALED AND GASKETED TO INHIBIT THE ENTRANCE OF OUTSIDE CONTAMINANTS. MEDIUM BASE PORCELAIN LAMP HOLDER.

LUMINAIRE TYPE 'S' – 150W HPS

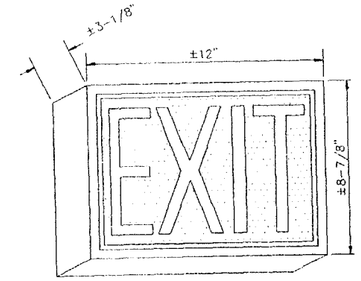

EXIT LETTERS – 6" HIGH WITH 3/4" STROKE, UNIVERSAL ARROW, WHITE BORDERED LETTERS AGAINST RED BACKGROUND

THE FIXTURE BODY SHALL CONSIST OF AN EXTRUDED ALUMINUM FRAME OF 0.060 INCH MINIMUM WALL THICKNESS SURROUNDING A METAL BACKPLATE OF 0.020 INCH MINIMUM THICKNESS

PROVIDE SIGNS WITH SOLID-STATE TRITIUM GAS ENERGY SOURCE WHICH ALLOWS LEGIBILITY IN TOTAL DARKNESS AT 100 FEET AFTER 10 YEARS. IN ADDITION TO THE REQUIREMENTS OF U.L. AND N.F.P.A., SIGNS SHALL BE LISCENCED FOR PUBLIC USE BY THE U.S. NUCLEAR REGULARY COMMISSION.

SLP MODEL 700 OR SAFETY LIGHT CORPORATION MODEL 2040 AS APPROVED BY MGB

LUMINAIRE TYPE "X"

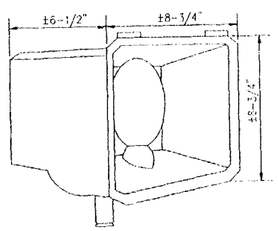

HEAVY DUTY DIE-CAST ALUMINUM HOUSING
1/2" THREADED SWIVEL MOUNTING, DEGREE MARKED
TEMPERED GLASS LENS IN BOTTOM HINGED ACCESS DOOR
UL 1572 LISTED SUITABLE FOR WET LOCATION
WIDE BEAM OPTICS FOR MEDIUM BASE HPS LAMP
INTEGRAL HIGH POWER FACTOR BALLAST
CORROSION-RESISTANT HARDWARE

LUMINAIRE TYPE E1 – 70W HPS LAMP

CLAYTON C. Y. FANG
LICENSED PROFESSIONAL ENGINEER
No. 4145-E
HAWAII, U.S.A.

THIS WORK WAS PREPARED BY ME OR UNDER MY SUPERVISION

04-30-04
SIGNATURE EXPIRATION DATE OF THE LICENSE

DESIGNED: E1	SUB SHEET NO.	TITLE OF SHEET	DRAWING NO 491 / 41,016
DRAWN: E1	E1.3	LUMINAIRE DETAILS	WO NO. KALA ZN-5 / SHEET 65
TECH REVIEW:		Kalaupapa National Historical Park	OF 71
DATE: 02/21/03			

66/72

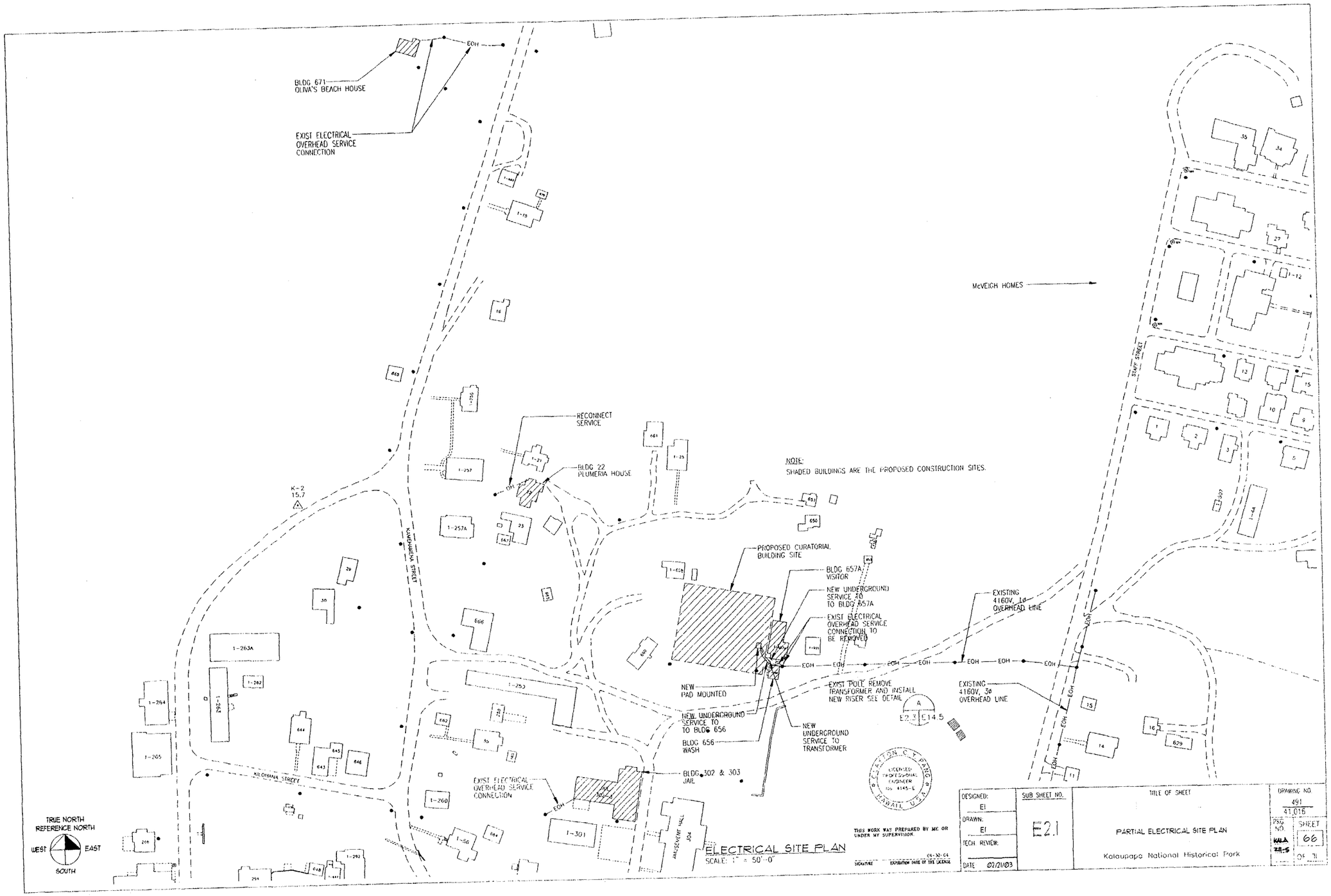
BLDG 671
OLIVA'S BEACH HOUSE
EXIST ELECTRICAL OVERHEAD SERVICE CONNECTION
EOH
RECONNECT SERVICE
BLDG 22
PLUMERIA HOUSE
K-2
15.7
KAMEHAMEHA STREET
KIKOHANA STREET
STATE STREET
McVEIGH HOMES
NOTE:
SHADED BUILDINGS ARE THE PROPOSED CONSTRUCTION SITES.
PROPOSED CURATORIAL BUILDING SITE
BLDG 657A
VISITOR
NEW UNDERGROUND SERVICE TO TO BLDG 657A
EXIST ELECTRICAL OVERHEAD SERVICE CONNECTION TO BE REMOVED
EXISTING 4160V, 1ø OVERHEAD LINE
EXISTING 4160V, 3ø OVERHEAD LINE
NEW PAD MOUNTED
EXIST POLE REMOVE TRANSFORMER AND INSTALL NEW RISER SEE DETAIL
NEW UNDERGROUND SERVICE TO TO BLDG 656
BLDG 656
WASH
NEW UNDERGROUND SERVICE TO TRANSFORMER
BLDG 302 & 303
JAIL
EXIST ELECTRICAL OVERHEAD SERVICE CONNECTION
AMUSEMENT HALL
304
E2.2
E14.5
LICENSED PROFESSIONAL ENGINEER
No. 4145-E
HAWAII, U.S.A.
THIS WORK WAS PREPARED BY ME OR UNDER MY SUPERVISION.
SIGNATURE
EXPIRATION DATE OF THE LICENSE
04-30-04
TRUE NORTH
REFERENCE NORTH
WEST
EAST
SOUTH
ELECTRICAL SITE PLAN
SCALE: 1" = 50'-0"
DESIGNED: EI
DRAWN: EI
TECH REVIEW:
DATE 02/21/03
SUB SHEET NO.
E2.1
TITLE OF SHEET
PARTIAL ELECTRICAL SITE PLAN
Kalaupapa National Historical Park
DRAWING NO.
491
41,016
PKG NO. KALA 71-5
SHEET 66
OF 71

67/72

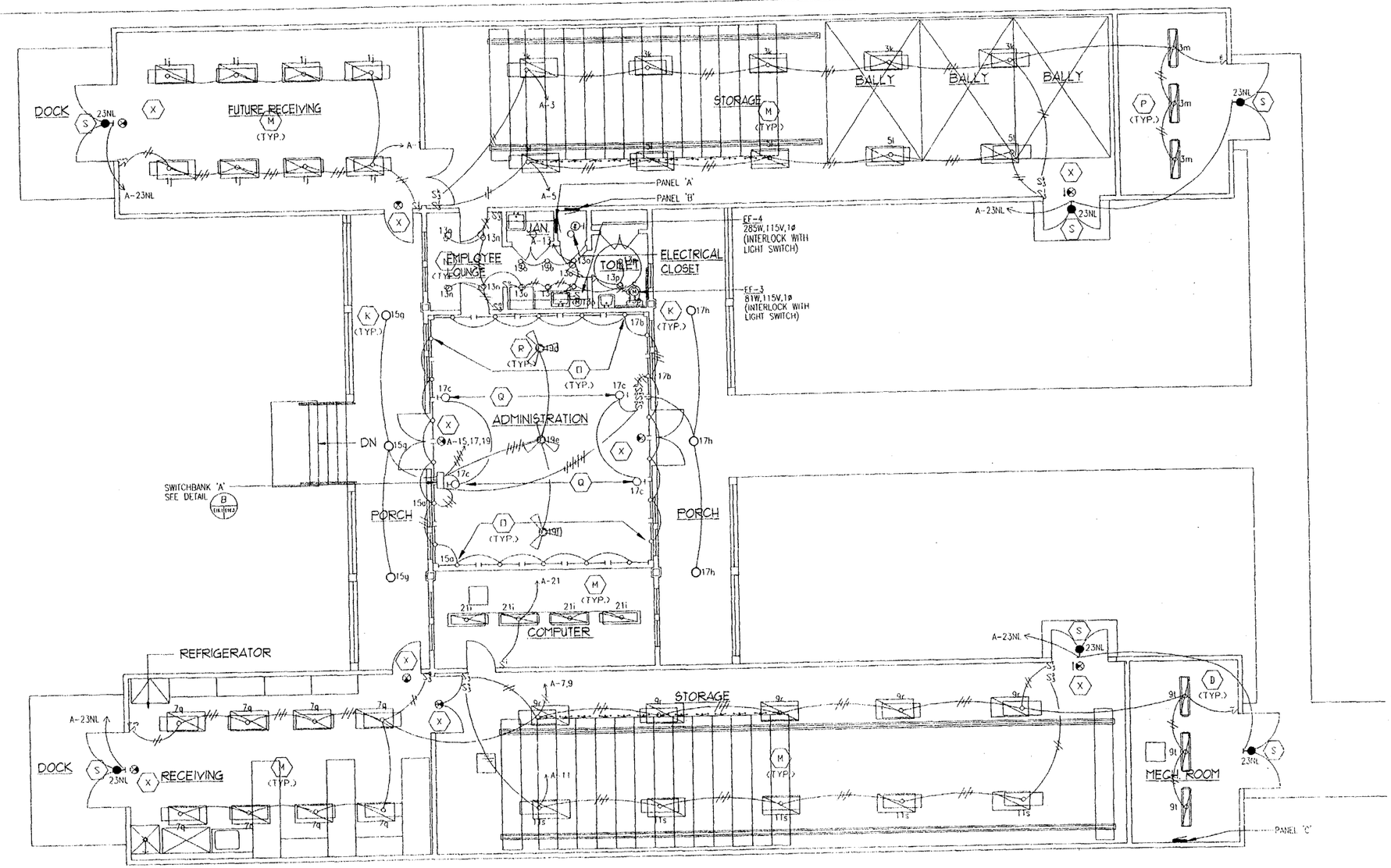

CURATORIAL FACILITY - LIGHTING PLAN
1/8" = 1'-0"

REFERENCE NORTH
NORTH
WEST
EAST
SOUTH

CLAYTON C. PAGE
LICENSED PROFESSIONAL ENGINEER
No. 4145-E
HAWAII, U.S.A.

THIS WORK WAS PREPARED BY ME OR UNDER MY SUPERVISION.

SIGNATURE — EXPIRATION DATE OF THE LICENSE 04-30-04

DESIGNED: EI	SUB SHEET NO.	TITLE OF SHEET	DRAWING NO.
DRAWN: EI	E3.1	CURATORIAL FACILITY	491 / 41,016
TECH. REVIEW:		LIGHTING PLAN	PKG NO. KALA 211-5
DATE 02/21/03		Kalaupapa National Historical Park	SHEET 67 OF 71

68/72

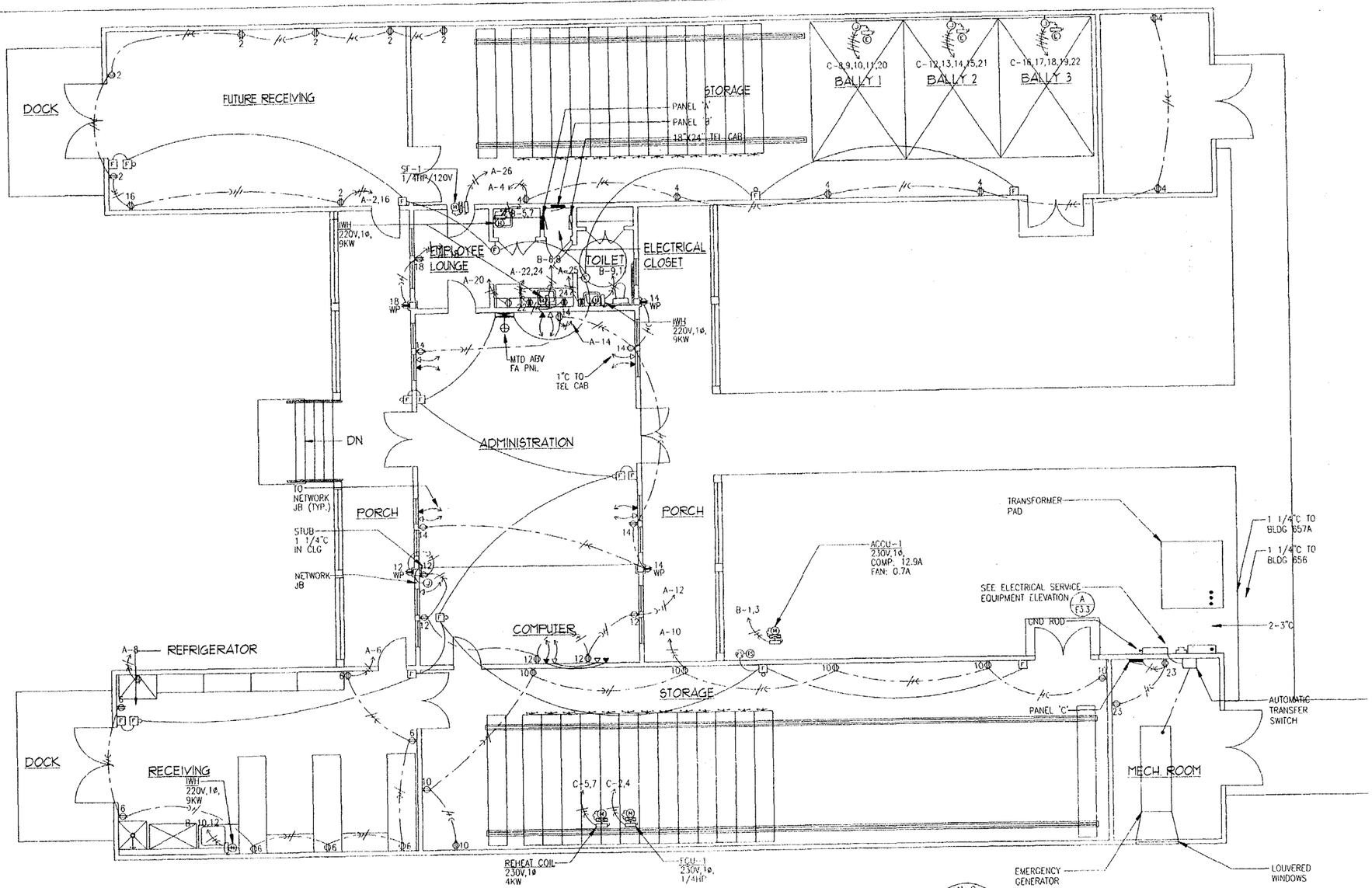

CURATORIAL FACILITY - POWER AND SIGNAL PLAN

1/8" = 1'-0"

REFERENCE NORTH
NORTH
WEST
EAST
SOUTH

CLAYTON C. Y. PANG
LICENSED PROFESSIONAL ENGINEER
No. 4145-E
HAWAII, U.S.A.

THIS WORK WAS PREPARED BY ME OR UNDER MY SUPERVISION.

SIGNATURE — EXPIRATION DATE OF THE LICENSE 04-30-04

DESIGNED: EI	SUB SHEET NO.	TITLE OF SHEET	DRAWING NO. 491 / 41,016
DRAWN: EI	E3.2	CURATORIAL FACILITY	PKG. NO. KALA ZIL-5
TECH. REVIEW.		POWER AND SIGNAL PLAN	SHEET 68 OF 71
DATE: 02/21/03		Kalaupapa National Historical Park	

69/72

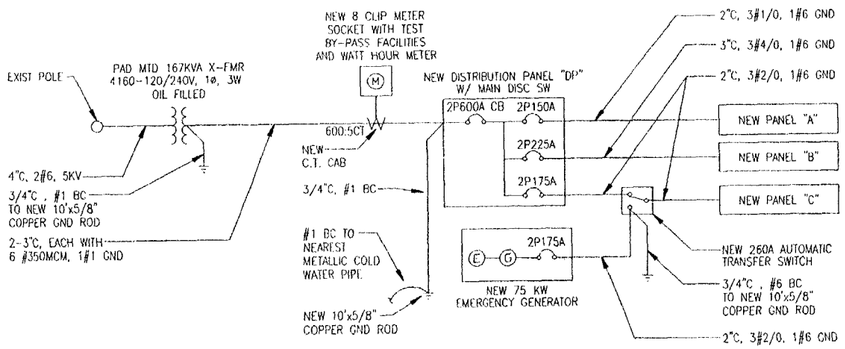

SINGLE LINE DIAGRAM

NOT TO SCALE

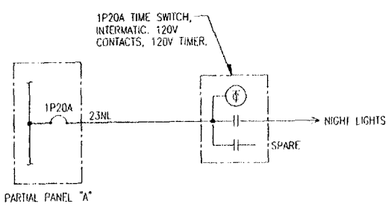

C / E14.3 NIGHTLIGHT CONTROL DIAGRAM

SCALE: NTS

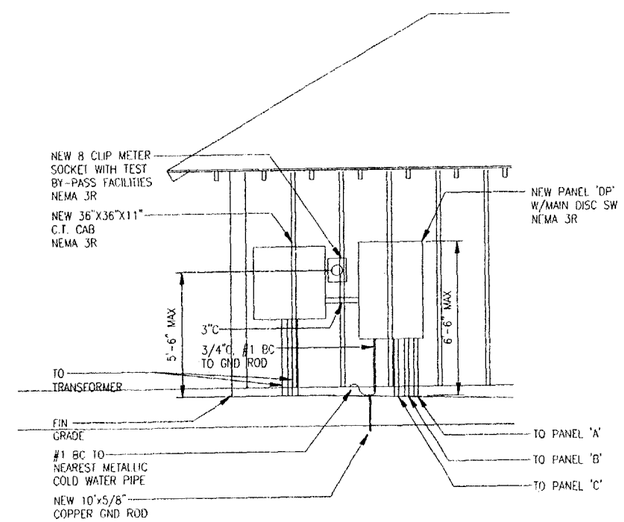

A / E14.3 ELECTRICAL SERVICE EQUIPMENT ELEVATION

SCALE: 3/8" = 1' - 0"

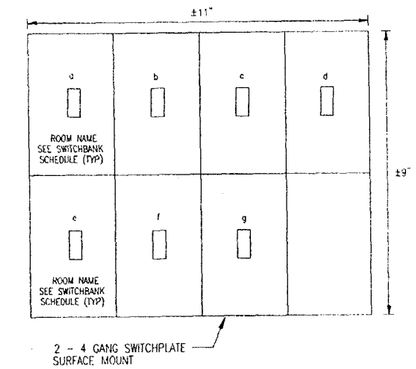

SWITCHBANK 'A'		
SWITCH	TYPE	DESCRIPTION
a	1P20A TOGGLE	VALENCE (PERIMETER)
b	1P20A TOGGLE	VALENCE (PERIMETER)
c	1P20A TOGGLE	SCONCES
d	FAN CONTROL SWITCH	CEILING FAN 1
e	FAN CONTROL SWITCH	CEILING FAN 2
f	FAN CONTROL SWITCH	CEILING FAN 3
g	1P20A TOGGLE	FRONT PORCH
-		BLANK

B / E14.1 E14.3 SWITCHBANK DETAIL

SCALE : NTS

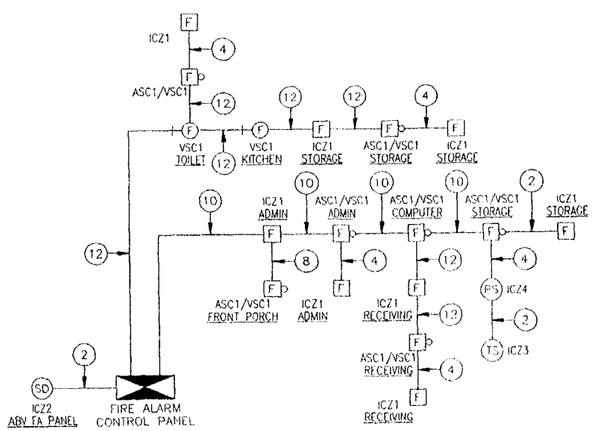

FIRE ALARM RISER DIAGRAM

FIRE ALARM NOTES:

1. VERIFY WIRING AND JUNCTION BOX SIZES WITH EQUIPMENT SUPPLIER PRIOR TO BID.
2. ALL WIRE SHALL BE NO. 14 THWN MINIMUM.
3. ALL EQUIPMENTS SHALL BE U.L. APPROVED.
4. FIRE ALARM SYSTEM SHALL BE ELECTRICALLY SUPERVISED.
5. CONDUIT SHALL BE 3/4"C MINIMUM.
6. (4) - INDICATES NUMBER OF #14 AWG THHN WIRES, 4-WIRES INDICATED.
7. FIRE ALARM SYSTEM SHALL CONFORM WITH UFC 14, NFPA 72 AND UFC 1988.
8. ALL EQUIPMENT SHALL BE A.D.A. COMPLIANT.
9. FIRE ALARM DEVICE QUANTITY TO BE DETERMINED BY CODE. ALL DEVICES TO BE COMPATIBLE WITH EXISTING FIRE ALARM SYSTEM.
10. VERIFY ALL WIRE COUNTS AND TYPE WITH EQUIPMENT SUPPLIER AND PROVIDE ADDITIONAL WIRING AND DEVICES AS REQUIRED FOR A COMPLETE AND OPERABLE SYSTEM.
11. FIRE SAFETY DURING CONSTRUCTION, ALTERATION OR DEMOLITION SHALL BE IN ACCORDANCE WITH ARTICLE 87, UFC 1988 AS AMENDED.
12. CALL MAUI FIRE DEPARTMENT PLANS TO SCHEDULE A FIRE ALARM ACCEPTANCE TEST.

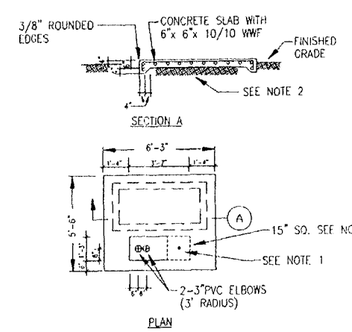

D / E14.3 TRANSFORMER PAD DETAIL

SCALE: NTS

NOTES:

1. GROUND ROD, 5/8" DIA, X 8'-0", FURNISHED AND INSTALLED BY THE CONTRACTOR. IF THE RESISTANCE EXCEEDS 25 OHMS, INSTALL ADDITIONAL GROUND RODS.
2. PAD TO BE INSTALLED ON FIRM UNDISTURBED SOIL OR ON 95% COMPACTED BACKFILL.
3. CONTRACTOR TO TERMINATE DUCTS WITHIN THE 15" SQUARE AREA.

CLAYTON C. Y. FANG
LICENSED PROFESSIONAL ENGINEER
No. 4149-E
HAWAII, U.S.A.

THIS WORK WAS PREPARED BY ME OR UNDER MY SUPERVISION

04-30-04
SIGNATURE EXPIRATION DATE OF THE LICENSE

DESIGNED: EI	SUB SHEET NO.	TITLE OF SHEET	DRAWING NO. 491
DRAWN: EI	E3.3	CURATORIAL FACILITY SINGLE LINE DIAGRAM, ELECTRICAL SERVICE EQUIPMENT ELEVATION, SWITCHBANK DETAIL, NIGHTLIGHT CONTROL DIAGRAM, FIRE ALARM RISER DIAGRAM, FIRE ALARM NOTES, TRANSFORMER PAD DETAIL Kalaupapa National Historical Park	PAC. NO. KALA 241-3
TECH. REVIEW:			SHEET 69 OF 72
DATE: 02/21/03			

70/72

PANEL "DP" 120/240 VOLTS 1ø, 3WSN
600A MAIN BKR BRANCH BKR I.C. 10,000 AMPS
SURFACE, 20" WIDE CABINET, INDUSTRIAL-BOLTED

CKT NO.	BKR	LOAD	KVA L1	KVA L2	WIRE
1,3	2P150A	PANEL 'A'	13.7	13.7	1/0
2,4	2P225A	PANEL 'B'	21.0	21.0	4/0
5,7	2P225A	PANEL 'B'	16.9	16.9	2/0
6,8	2P	P F B			
TOTAL			51.6	51.6	

PANEL "A" 120/240 VOLTS 1ø, 3WSN
225A MAIN LUGS ONLY BRANCH BKR I.C. 10,000 AMPS
FLUSH, 20" WIDE CABINET, INDUSTRIAL-BOLTED

CKT NO.	BKR	LOAD	KVA L1	KVA L2	WIRE
1	1P20A	LIGHTS - RECEIVING NORTH	1.6		12
2		RECEP - RECEIVING NORTH	1.6		
3		LIGHTS - STORAGE/MECH NORTH		1.5	
4		RECEP - STORAGE/MECH NORTH		1.2	
5		LIGHTS - STORAGE NORTH	1.0		
6		RECEP - RECEIVING SOUTH	1.4		
7		LIGHTS - RECEIVING SOUTH		1.6	
8		RECEP - REFRIG SOUTH		1.0	
9		LIGHTS - STORAGE/MECH SOUTH	1.5		
10		RECEP - STORAGE SOUTH	1.4		
11		LIGHTS - STORAGE SOUTH		1.0	
12		RECEP - COMPUTER ROOM		1.6	
13		LIGHTS - KITCHENETTE/RESTROOM	1.6		
14		RECEP - ADMINISTRATION	1.6		
15		LIGHTS - ADMINISTRATION PERIMETER		1.3	
16		RECEP - REFRIG NORTH (FUTURE)		1.0	
17		LIGHTS - ADMINISTRATION PERIMETER	1.5		
18		RECEP - KITCHENETTE	0.4		
19		CEILING FANS ADMINSTRATION		0.9	
20		RECEP - REFRIGERATOR KITCHEN		1.0	
21		LIGHTS - COMPUTER ROOM	0.8		
22		RECEP - KITCHENETTE ABV CTR	0.2		
23		LIGHTS - NIGHT LIGHT		1.2	
24		RECEP - KITCHENETTE ABV CTR		0.2	
25		RECEP - RESTROOM	0.2		
26		SF-1	0.7		
27		SPARE			
28					
29					
30					
31	1P	P F B			
32					
33					
34					
35					
36					
37					
38					
39					
40					
41					
42					
TOTAL			15.5	13.5	

PANEL "B" 120/240 VOLTS 1ø, 3WSN
225A MAIN LUGS ONLY BRANCH BKR I.C. 10,000 AMPS
FLUSH, 20" WIDE CABINET, INDUSTRIAL-BOLTED

CKT NO.	BKR	LOAD	KVA L1	KVA L2	WIRE
1,3	2P30A	ACCU-1	1.6	1.6	10
2	1P20A	SPARE			
4	1P20A	SPARE			
5,7	2P50A	WH - JANITOR CLOSET	4.5	4.5	8
6,8	2P50A	WH - KITCHENETTE	4.5	4.5	8
9,11	2P50A	WH - RESTROOM	4.5	4.5	8
10,12	2P50A	WH - RECEIVING SOUTH	4.5	4.5	8
13	1P	P F B			
14					
15					
16					
17					
18					
19					
20					
21					
22					
23					
24					
25					
26					
27					
28					
29					
30					
31					
32					
33					
34					
35					
36					
37					
38					
39					
40					
41					
42					
TOTAL			19.6	19.6	

PANEL "C" 120/240 VOLTS 1ø, 3WSN
225A MAIN LUGS ONLY BRANCH BKR I.C. 10,000 AMPS
SURFACE, 20" WIDE CABINET, INDUSTRIAL-BOLTED

CKT NO.	BKR	LOAD	KVA L1	KVA L2	WIRE
1,3	2P40A	SPARE			
2,4	2P20A	FCU-1	0.4	0.4	12
5,7	2P30A	REHEAT COIL	2.0	2.0	10
6	1P20A	SPARE			
8,10	2P30A	BALLY 1 - (ACCU)	1.6	1.6	12
9,11	2P20A	BALLY 1 - (FCU)	1.9	1.9	12
12,14	2P30A	BALLY 2 - (ACCU)	1.6	1.6	12
13,15	2P20A	BALLY 2 - (FCU)	1.9	1.9	12
16,18	2P30A	BALLY 3 - (ACCU)	1.6	1.6	12
17,19	2P20A	BALLY 3 - (FCU)	1.9	1.9	12
20	1P40A	BALLY 1 - (HUMIDIFIER)		2.0	10
21	1P40A	BALLY 2 - (HUMIDIFIER)	2.0		10
22	1P40A	BALLY 3 - (HUMIDIFIER)	2.0		10
23	1P20A	RECEP - MECH ROOM SOUTH		1.0	12
24	1P	P F B			
25					
26					
27					
28					
29					
30					
31					
32					
33					
34					
35					
36					
37					
38					
39					
40					
41					
42					
TOTAL			16.9	15.9	

CLAYTON C. Y. FANG
LICENSED PROFESSIONAL ENGINEER
No. 4145-E
HAWAII, U.S.A.

THIS WORK WAS PREPARED BY ME OR UNDER MY SUPERVISION.

SIGNATURE — EXPIRATION DATE OF THE LICENSE 04-30-04

DESIGNED: EI	SUB SHEET NO.	TITLE OF SHEET	DRAWING NO. 491 / 41,016
DRAWN: EI	E3.4	CURATORIAL FACILITY PANEL SCHEDULES	PKG. NO. KKA 2(1-5
TECH REVIEW:		Kalaupapa National Historical Park	SHEET 10 OF 71
DATE 07/21/03			

71/72

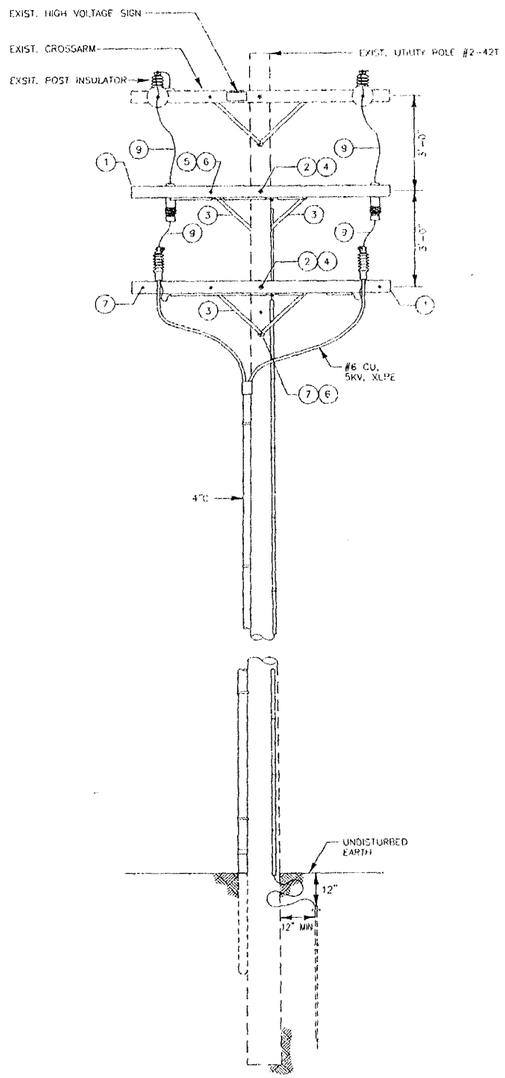

FRONT VIEW

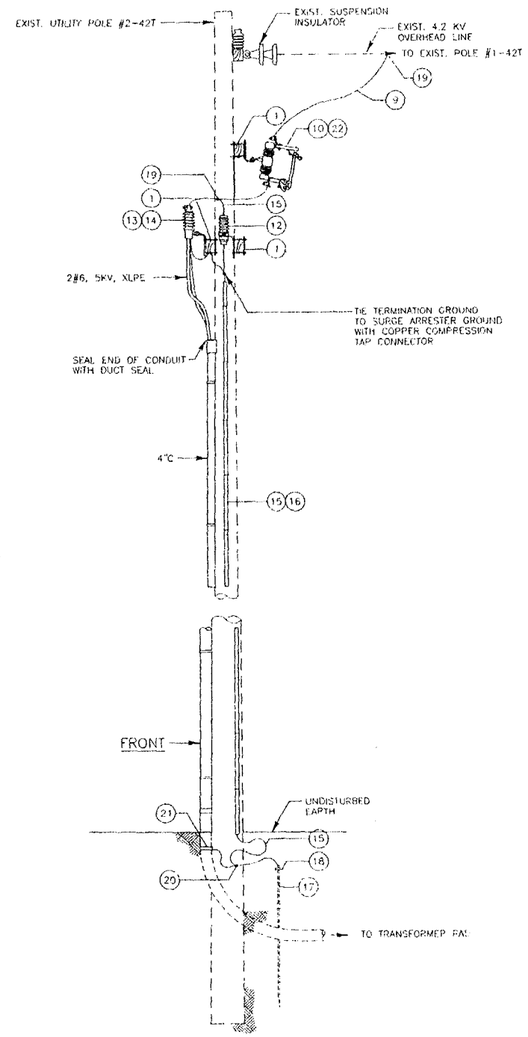

SIDE VIEW

POLE MATERIAL SCHEDULE

ITEM	DESCRIPTION
1	WOOD CROSSARM. 3½" x 4½" x 8'-0"
2	MACHINE BOLT. 5/8" DIA x 18". HOT-DIP GALVANIZED. SQUARE HEAD & SQUARE NUT.
3	FLAT CROSSARM BRACE. 1/4" x 1¼" x 28" LONG, HOT-DIP GALVANIZED.
4	WASHER. SQUARE, 2" x 2" x 1/8", 11/16" DIA HOLE, HOT-DIP GALVANIZED.
5	BRACE BOLT. 3/8" DIA x 4½". 2" THREAD LENGTH. HOT-DIP GALVANIZED, SQUARE HEAD & SQUARE NUT.
6	WASHER. ROUND. 1" OUTSIDE DIA, 7/16" HOLE DIAMETER, HOT-DIP GALVANIZED.
7	DOUBLE ARMING BOLT. 5/8" DIA x 18", 4 SQUARE NUTS, HOT-DIP GALVANIZED.
8	HOT LINE CLAMP. FOR COPPER TO COPPER CONNECTIONS. #4 TAP. SIZE FOR EXISTING OVERHEAD CONDUCTORS
9	CONDUCTOR #4 BARE COPPER
10	FUSE CUTOUT. 15KV. 95KV BIL, 100A CONTINUOUS.
11	FUSE LINK. TYPE K. 40A SOLID HEAD.
12	SURGE ARRESTER. DISTRIBUTION CLASS, 12KV. TERMINAL NUT & WIRE CLAMP (TOP AND BOTTOM), CLAMPING BAND & NEMA 4 x 5 CROSSARM HANGER.
13	PORCELAIN TERMINATION KIT. 15KV, FOR #2 15KV XLPE CABLE TO #4 CU. TERMINATION LUG FOR #4 STRANDED COPPER CONDUCTOR.
14	TERMINATION MOUNTING BRACKET.
15	GROUND CONDUCTOR. #4 AWG. SOLID BARE COPPER
16	WOOD GROUND WIRE MOLDING
17	GROUND ROD. 3/4" DIA x 10'-0" COPPER CLAD STEEL.
18	GROUND ROD CLAMP. CORROSION RESISTANT COPPER ALLOY, SUITABLE FOR DIRECT BURIAL, HEX HEAD BOLT.
19	COMPRESSION TAP CONNECTOR. FOR #1/0 BC RUN. #4 SOLID BARE COPPER TAP.
20	COMPRESSION TAP CONNECTOR. FOR #4 SOLID BARE COPPER TAP & RUN.
21	GROUND CONNECTOR. FOR #4 SOLID BARE COPPER TO 5" CONDUIT, SUITABLE FOR ENCASEMENT IN CONCRETE.
22	FUSE LINK. TYPE K. 100A SOLID HEAD, 15KV.
23	SUSPENSION INSULATOR. 10" DISK, ANSI CLASS 52-4, LIGHT GREY GLAZE
24	FUSE LINK. TYPE K. 20A SOLID HEAD. 15KV.
25	DISTRIBUTION POST PORCELAIN INSULATOR. 15KV. TIE TOP. F NECK

A
E2.3 E14.5

UTILITY POLE #2-42T RISER DETAIL

NOT TO SCALE

R. CLAYTON C.Y. PANG LICENSED PROFESSIONAL ENGINEER No. 4145-E HAWAII, U.S.A.

THIS WORK WAS PREPARED BY ME OR UNDER MY SUPERVISION.

SIGNATURE — EXPIRATION DATE OF THE LICENSE 04-30-04

DESIGNED	SUB. SHEET NO.	TITLE OF SHEET	DRAWING NO.
EI	E3.5	CURATORIAL FACILITY	491
DRAWN: EI		POLE DETAIL, POLE MATERIAL SCHEDULE	41,016
DGN. REVIEW		Kalaupapa National Historical Park	PKG NO. / SHEET 71 OF 71
DATE 02/21/03			

72/72