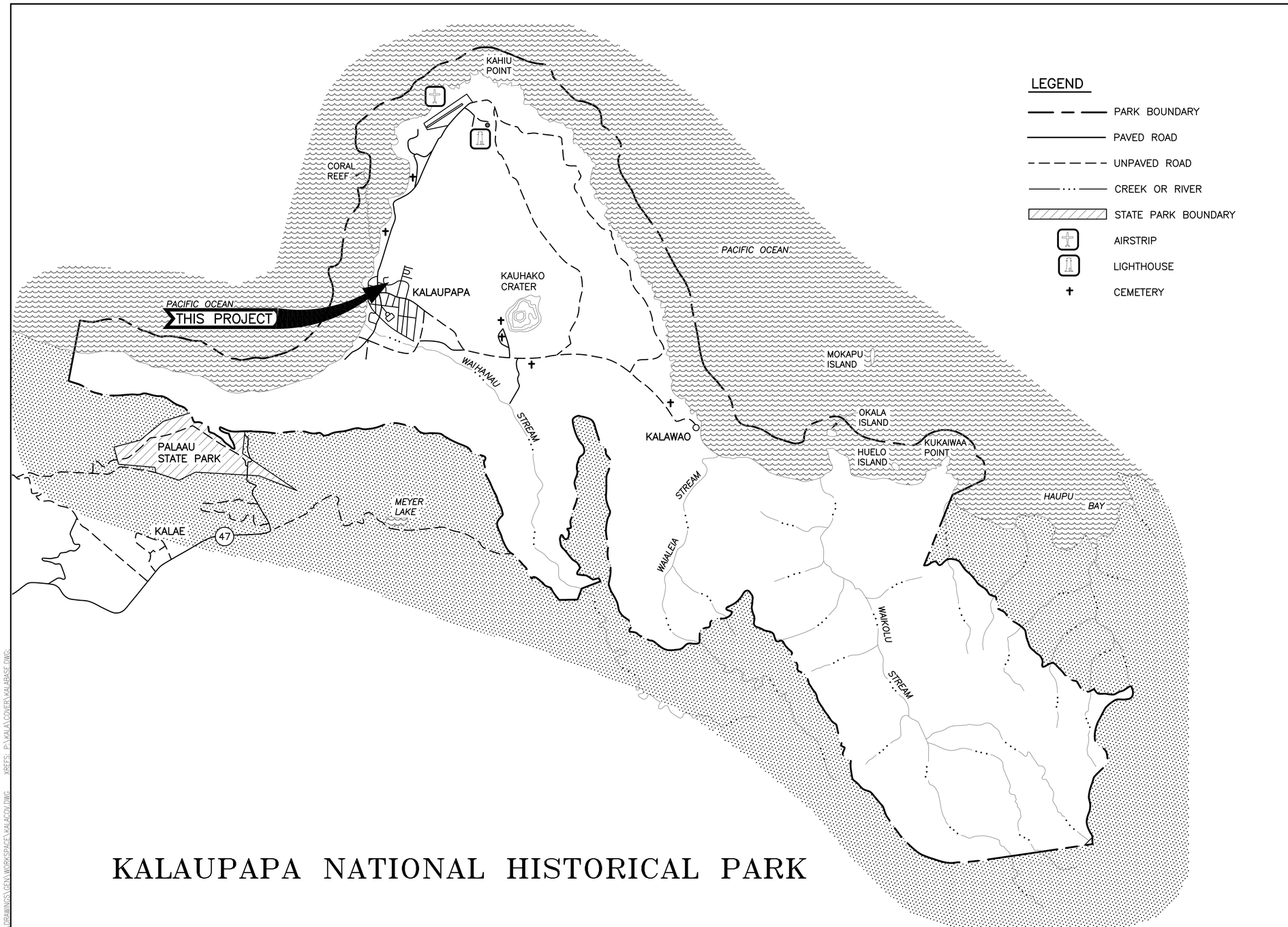

KALAUPAPA NATIONAL HISTORICAL PARK

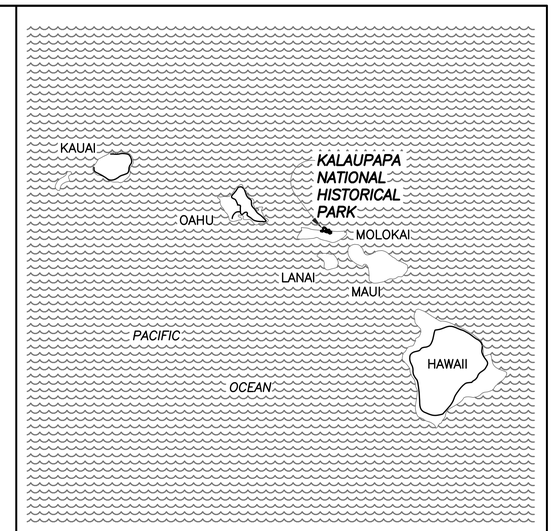

HAWAII

60 0 60
SCALE OF MILES

DRAWING INDEX

SHT NO	TITLE
T1	COVER SHEET
A1	SITE PLAN, ABBREVIATIONS & SYMBOLS
A2	FLOOR PLAN, REFLECTED CEILING PLAN, DOOR TYPES & DOOR SCHEDULE
A3	ROOF PLAN & DETAIL
A4	BUILDING CROSS SECTIONS, TYPICAL WALL SECTION, ROOM FINISH SCHEDULES, MATERIAL INDEX & DETAILS
M1	EQUIPMENT SCHEDULES, GENERAL NOTES, FIRE PROTECTION NOTES, AND MECHANICAL LEGEND
M2	PLUMBING FLOOR PLANS
M3	FIRE PROTECTION PLAN
M4	A/C & V FLOOR PLAN
M5	A/C & V DETAIL FLOOR PLAN AND SCHEMATICS
M6	PIPING DIAGRAMS
M7	DETAILS
E1	NOTES/SYMBOLS/ABBREVIATIONS
E2	SITE/LOCATION/GENERAL WORK SCOPE
E3	ELECTRICAL PLAN – EXISTING SERVICE/DISTRIBUTION
E4	ONE–LINE DIAGRAM/PNLBD SCHEDULES
E5	ELECTRICAL PLAN – NEW WORK

SCALE OF FEET
2,000 0 2,000 4,000
500 0 500 1,000
SCALE OF METERS

PMIS #98337

This work was prepared by me or under my supervision and construction of this project will be under my observation.

Signature — Expiration Date of the License 4/30/2012

GLENN E. MASON
LICENSED PROFESSIONAL ARCHITECT
No. 4073
HAWAII, U.S.A.

UNITED STATES
DEPARTMENT OF THE INTERIOR

NATIONAL PARK SERVICE
DENVER SERVICE CENTER

TITLE OF DRAWING
COMPLETE CURATORIAL FACILITY TO MEET COLLECTIONS MANAGEMENT STANDARD
LOCATION WITHIN PARK

NAME OF PARK
KALAUPAPA NATIONAL HISTORICAL PARK

REGION: PACIFIC WEST
COUNTY
STATE

DRAWING NO. 491/80037

PKG. NO.

SHEET COVER OF 17

BASIC DATA: BOUNDARY MAP 491/80,023 2/80; MANUAL COVER SHEET 6/83; REVISED & REDRAWN 1/95. UPDATED 11/98. SGS.

3/6/03 16:04 M.TRACY R15 P:\KALAV211-S\DRAWINGS\GEN\WORKSPACE\KALACOV.DWG XREFS: P:\KALAV\COVER\KALABASE.DWG

ABBREVIATIONS

AB	ANCHOR BOLT
AC	ASPHALTIC CONCRETE
A/C	AIR CONDITIONING
ACC	ACCESSIBLE
ACOUS	ACOUSTIC
AD	AREA DRAIN
ADJ	ADJUSTABLE; ADJACENT
AGGR	AGGREGATE
ALUM	ALUMINUM
ALT	ALTERNATE
APPROX	APPROXIMATE
ARCH	ARCHITECTURAL
ASB	ASBESTOS
ASPH	ASPHALT
BD	BOARD
BLDG	BUILDING
BM	BEAM
BOT	BOTTOM
BRKT	BRACKET
BUR	BUILT UP ROOFING
CAB	CABINET
CBB	CEMENTITIOUS BACKER BOARD
CEM	CEMENT
CER	CERAMIC
CI	CAST IRON
CLG	CEILING
CLO	CLOSET
CLR	CLEAR
CMU	CONCRETE MASONRY UNIT
CNTR	COUNTER
CO	CLEANOUT
COND	CONDITION
COL	COLUMN
CONC	CONCRETE
CONN	CONNECT
CONSTR	CONSTRUCTION
CONT	CONTINUOUS
CONTR	CONTRACTOR
CORR	CORRIDOR
CT	CERAMIC TILE
CTR	CENTER
CSK	COUNTER SUNK
D	DEEP, DEPTH
DBL	DOUBLE
DEMO	DEMOLITION
DEPT	DEPARTMENT
DET	DETAIL
DIA	DIAMETER
DIM	DIMENSION
DISP	DISPENSER
DR	DOOR
DS	DOWNSPOUT
DSP	DRY STANDPIPE
DWG	DRAWING
DWR	DRAWER
E	EAST
EA	EACH
EJ	EXPANSION JOINT
EL	ELEVATION
ELEC	ELECTRICAL
EMER	EMERGENCY
ENCL	ENCLOSURE
EP	ELECTRICAL PANELBOARD
EPS	EXPANDED POLYSTYRENE BOARD
EQ	EQUAL
EQUIP	EQUIPMENT
EWC	ELECTRIC WATER COOLER
EXP	EXPANSION; EXPOSED
EXIST	EXISTING
EXT	EXTERIOR
FA	FIRE ALARM
FB	FLAT BAR
FD	FLOOR DRAIN
FDTN	FOUNDATION
FE	FIRE EXTINGUISHER
FEC	FIRE EXTINGUISHER CABINET
FHC	FIRE HOSE CABINET
FIN	FINISH
FIXT	FIXTURE
FLR	FLOOR
FLASH	FLASHING
FLUOR	FLUORESCENT
FOC	FACE OF CONCRETE
FOF	FACE OF FINISH
FOS	FACE OF STUD
FP	FIRE PROTECTION
FR	FRAME
FS	FULL SIZE
FT	FOOT OR FEET
FTG	FOOTING
FURG	FURRING
FUT	FUTURE
G	GROUND
GA	GAUGE
GALV	GALVANIZED
GB	GRAB BAR
GI	GALVANIZED IRON
GL	GLASS
GLZ	GLAZING
GYP	GYPSUM
H	HIGH
HB	HOSE BIBB
HC	HOLLOW CORE
HDPE	HIGH DENSITY POLYETHYLENE
HDWD	HARDWOOD
HDW	HARDWARE
HHMB	HEX HEAD MACHINE BOLT
HM	HOLLOW METAL
HORIZ	HORIZONTAL
HT	HEIGHT
ID	INSIDE DIAMETER
INCL	INCLUDED
INFO	INFORMATION
INSUL	INSULATION
INT	INTERIOR
JAL	JALOUSIE
JAN	JANITOR
KIT	KITCHEN
KOP	KNOCK OUT PANEL
LAM	LAMINATE
LAV	LAVATORY
LR	LIVING ROOM
LT	LIGHT
MACH	MACHINE
MAX	MAXIMUM
MC	MEDICINE CABINET
MECH	MECHANICAL
MEMB	MEMBRANE
MT	MOUNT
MTL	METAL
MFR	MANUFACTURER
MH	MANHOLE
MIN	MINIMUM
MIRR	MIRROR
MISC	MISCELLANEOUS
MO	MASONRY OPENING
MTD	MOUNTED
MTG	MOUNTING
MULL	MULLION
MOPR	MOP RACK
N	NORTH
NIC	NOT IN CONTRACT
NO or #	NUMBER
NOM	NOMINAL
NTS	NOT TO SCALE
OA	OVERALL
OGL	OBSCURE GLASS
OC	ON CENTER
OD	OUTSIDE DIAMETER (DIM)
OFCI	OWNER FURNISHED/ CONTRACTOR INSTALLED
OFOI	OWNER FURNISHED/ OWNER INSTALLED
OFF	OFFICE
OH	OVERHANG
OPNG	OPENING
OPP	OPPOSITE
PC	PIECE
PL GL	PLATE GLASS
PLAM	PLASTIC LAMINATE
PLAS	PLASTER
PLBG	PLUMBING
PLYWD	PLYWOOD
PNL	PANEL
PR	PAIR
PRCST	PRECAST
PTDR	PAPER TOWEL DISPENSER AND RECEPTACLE
PTN	PARTITION
QT	QUARRY TILE
QTR	QUARTER
R	RADIUS; RISER
RD	ROOF DRAIN
RECPT	RECEPTACLE
REF	REFRIGERATOR; REFERENCE
REINF	REINFORCE
REQD	REQUIRED
RESIL	RESILIENT
REG	REGISTER
RM	ROOM
RND	ROUND
RO	ROUGH OPENING
RWD	REDWOOD
RWL	RAIN WATER LEADER
S	SOUTH
SC	SOLID CORE
SCD	SEAT COVER DISPENSER
SCHED	SCHEDULE
SCRN	SCREEN
SD	SOAP DISPENSER
SECT	SECTION
SHV	SHELVING
SHR	SHOWER
SHT	SHEET
SIM	SIMILAR
SLNT	SEALANT
SLDG	SLIDING
SND	SANITARY NAPKIN DISPENSER
SNDU	SANITARY NAPKIN DISPOSAL UNIT
SWR	SEWER
SPEC	SPECIFICATION
SQ	SQUARE
SST	STAINLESS STEEL
SS	SERVICE SINK
STA	STATION
STC	SOUND TRANSMISSION CLASS
STD	STANDARD
STL	STEEL
STOR	STORAGE
STRUCT	STRUCTURAL
SURR	SURROUND
SUSP	SUSPENDED
SYMM	SYMMETRICAL
T	TREAD
TB	TOWEL BAR
TC	TOP OF CURB
TEL	TELEPHONE
TMPD	TEMPERED
TER	TERRAZZO
T&G	TONGUE AND GROOVE
THK	THICKNESS
THRES	THRESHOLD
TOP	TOP OF PAVEMENT
TPD	TOILET PAPER DISPENSER
TPH	TOILET PAPER HOLDER
TOW	TOP OF WALL
TSCD	TOILET SEAT COVER DISPENSER
TYP	TYPICAL
UBC	UNIFORM BUILDING CODE
UNO	UNLESS NOTED OTHERWISE
UL	UNDERWRITERS LABORATORY
VCT	VINYL COMPOSITION TILE
VIF	VERIFY IN FIELD
VTR	VENT THRU ROOF
VERT	VERTICAL
VEST	VESTIBULE
W	WEST
W/	WITH
WC	WATER CLOSET
WD	WOOD
WDW	WINDOW
WH	WATER HEATER
W/O	WITHOUT
WO	WHERE OCCURS
WP	WATERPROOFING
WPM	WATERPROOFING MEMBRANE
WR	WATER REPELLENT
WSCT	WAINSCOT
WT	WEIGHT
WWM	WELDED WIRE MESH

SYMBOLS

(A) PARTITION TYPE

(2) DOOR IDENTIFICATION

A / A1 A4 — DETAIL REFERENCE
SHT NO WHERE DETAIL IS DRAWN
SHT NO WHERE DETAIL IS REFERENCED

A / A1 A4 — BUILDING OR WALL SECTION
SHT NO WHERE SECTION IS DRAWN
SHT NO WHERE SECTION IS REFERENCED

MAPS

SITE PLAN

NO SCALE

WEST / SOUTH / EAST — REFERENCE NORTH TRUE NORTH

This work was prepared by me or under my supervision and construction of this project will be under my observation.

Signature — Expiration Date of the License 4/30/2012

GLENN E. MASON — LICENSED PROFESSIONAL ARCHITECT No. 4073 — HAWAII, U.S.A.

DESIGNED: WL	SUB SHEET NO.	TITLE OF SHEET: COMPLETE CURATORIAL FACILITY TO MEET COLLECTION MANAGEMENT STANDARD AND PROVIDE SAFE PUBLIC ACCESS	DRAWING NO. 491/80037
DADD WL	A1	SITE PLAN, ABBREVIATIONS & SYMBOLS	PMIS/PKG NO. 98337
TECH. REVIEW: GM		KALAUPAPA NATIONAL HISTORICAL PARK	SHEET 2 OF 17
DATE: 8/4/10			

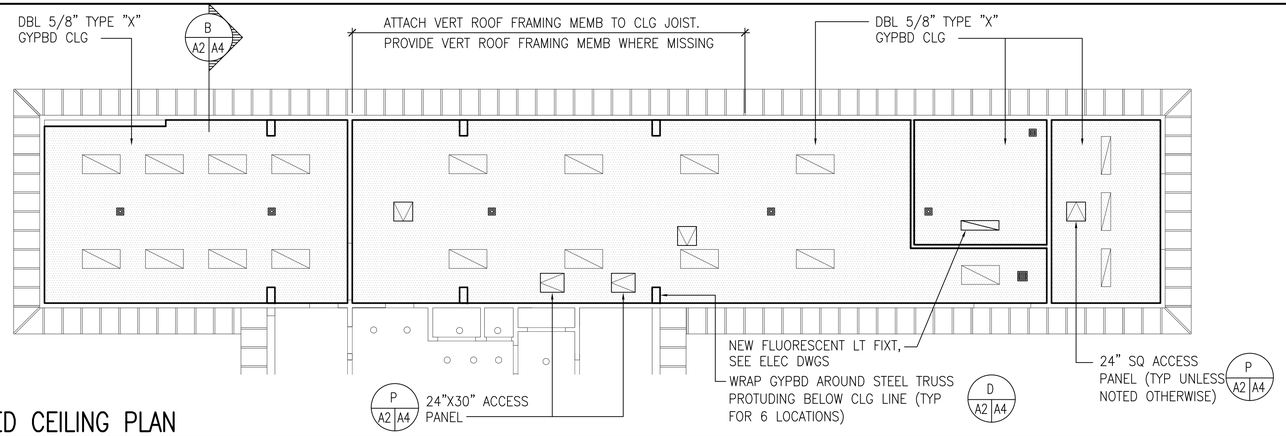

REFLECTED CEILING PLAN

1/8" = 1'-0"

0 8' 16' 24'

CEILING GENERAL NOTES:

1. INSTALL R-30 INSULATION, ENTIRE CLG
2. REMOVE EXISTING DEVICES AS REQUIRED TO INSTALL NEW GYPBD CEILING. REINSTALL DEVICES AFTER COMPLETION OF GYPBD INSTALLATION & PAINTING.
3. SEE MECH DWGS FOR ADDITIONAL WORK
4. SEE ELEC DWGS FOR ADDITIONAL WORK

LEGEND

- SUPPLY AIR GRILLE
- RETURN AIR REGISTER
- REINSTALL EXST SURFACE MOUNT FLOURESCENT LIGHT FIXTURE UNLESS NOTED OTHERWISE, SEE ELEC DWGS
- REINSTALL EXST SURFACE MOUNT FLOURESCENT LIGHT FIXTURE UNLESS NOTED OTHERWISE, SEE ELEC DWGS

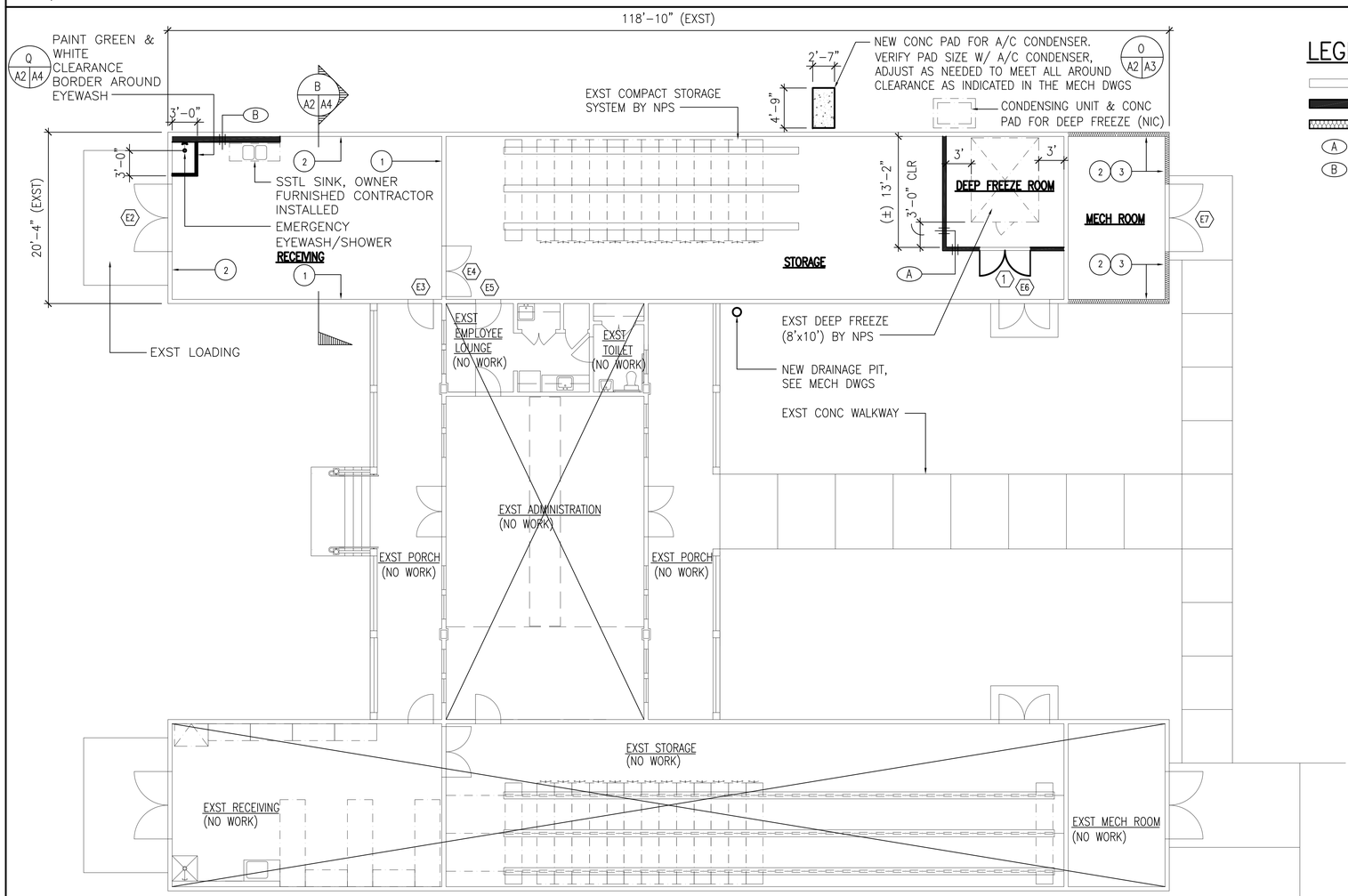

FLOOR PLAN

1/8" = 1'-0"

0 8' 16' 24'

REFERENCE NORTH
TRUE NORTH
WEST EAST
SOUTH

LEGEND

- EXST WALL, SEE KEY NOTE FOR WORK REQUIRED
- NEW WALL, SEE PARTITION TYPE
- EXST WALL, SEE KEY NOTE FOR WORK REQUIRED
- (A) PARTITION TYPE, SEE DETAIL I/A4
- (B) PARTITION TYPE, SEE DETAIL J/A4

GENERAL NOTES:

1. PAINT CONC SLAB TO MATCH SOUTH SIDE, TYP ALL FLOORS.
2. REMOVE EXSTING DEVICES AS REQUIRED TO INSTALL NEW GYPBD WALL. REINSTALL DEVICES AFTER COMPLETION OF GYPBD INSTALLATION & PAINTING.

KEY NOTE

1. EXISTING GYPBD EXISTS, TAPE & MUD ALL JOINTS, SAND SMOOTH.
2. NEW GYPBD OVER EXISTING FRAMING.
3. NEW R-19 INSULATION IN EXISTING WALL CAVITY

DOOR TYPES

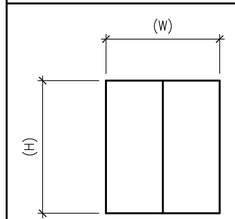

A FLUSH SOLID CORE DOOR W/ SMOKE GASKET & SELF CLOSURE

DOOR SCHEDULE

DOOR NO.	DOOR SIZE (W X H)	TYPE	THICKNESS	DETAIL HEAD	DETAIL JAMB	DETAIL THRES.	HDWE. SET	REMARKS
1	6'-0"x7'-0"	A	1-3/4"	H/A4	H/A4	H/A4	1	
E2	8'-0"x8'-0"	–	–	–	–	–	–	INSTALL NEW 1x6 DOOR CASING ON ROOM SIDE.
E3	3'-0"x7'-0"	–	–	–	–	–	–	INSTALL NEW 1x6 DOOR CASING ON ROOM SIDE.
E4	6'-0"x8'-0"	–	–	–	–	–	–	INSTALL NEW 1x6 DOOR CASING ON BOTH SIDES
E5	3'-0"x7'-0"	–	–	–	–	–	–	INSTALL NEW 1x6 DOOR CASING ON ROOM SIDE.
E6	6'-0"x8'-0"	–	–	–	–	–	–	INSTALL NEW 1x6 DOOR CASING ON ROOM SIDE. INSTALL NEW DOOR GASKET AT HEAD & JAMB. SEE SPECIFICATIONS FOR DOOR GASKET.
E7	8'-0"x8'-0"	–	–	–	–	–	–	INSTALL NEW 1x6 DOOR CASING ON ROOM SIDE.

This work was prepared by me or under my supervision and construction of this project will be under my observation.

Signature — Expiration Date of the License: 4/30/2012

GLENN E. MASON LICENSED PROFESSIONAL ARCHITECT No. 4073 HAWAII, U.S.A.

DESIGNED: WL	SUB SHEET NO.	TITLE OF SHEET	DRAWING NO.
DADD WL	A2	COMPLETE CURATORIAL FACILITY TO MEET COLLECTION MANAGEMENT STANDARD AND PROVIDE SAFE PUBLIC ACCESS	491/80037
TECH. REVIEW: GM		FLOOR PLAN, REFLECTED CEILING PLAN, DOOR TYPES & DOOR SCHEDULE	PMIS/PKG NO. 98337
DATE: 8/4/10		KALAUPAPA NATIONAL HISTORICAL PARK	SHEET 3 of 17

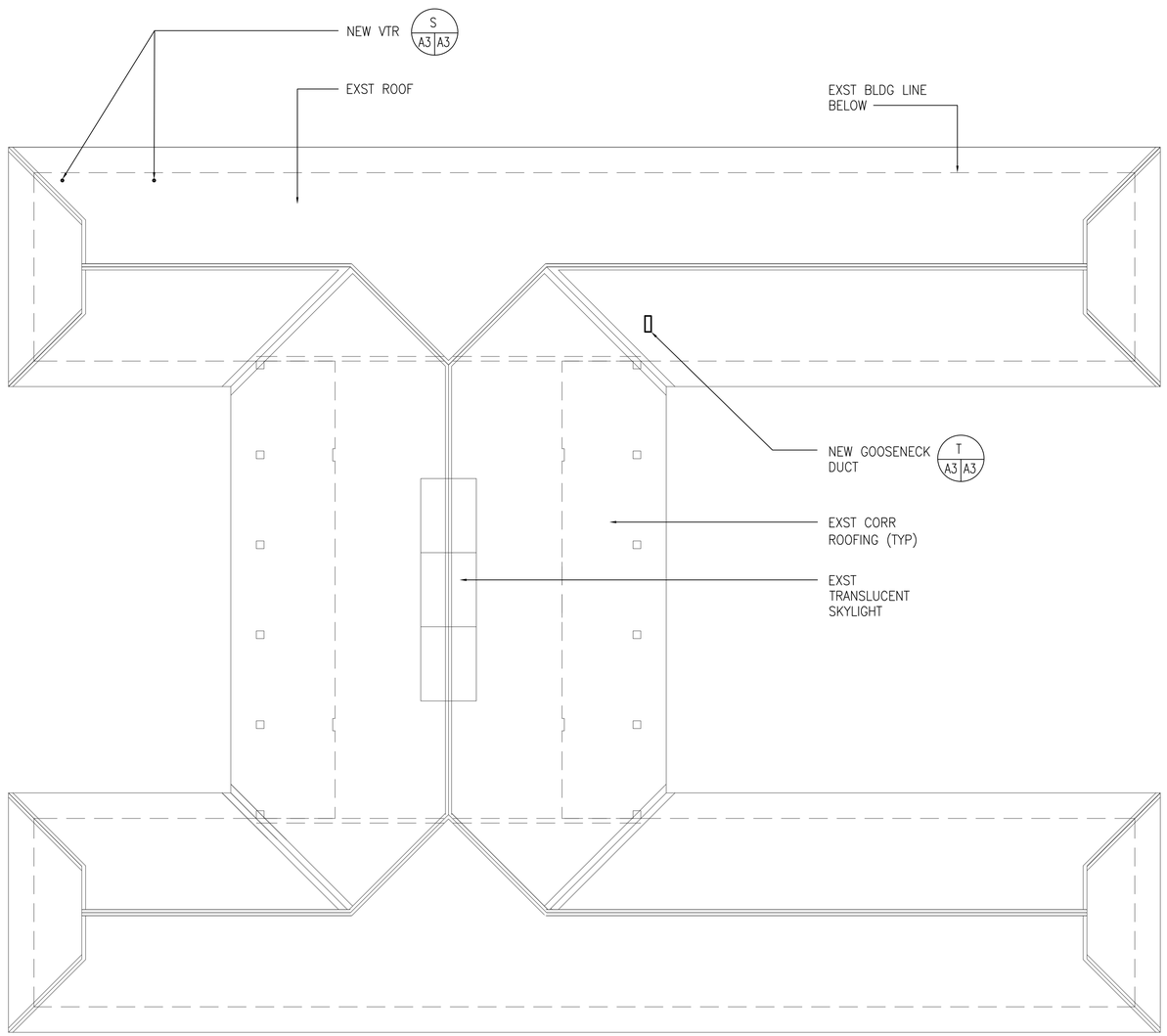

ROOF PLAN

1/8" = 1'-0"

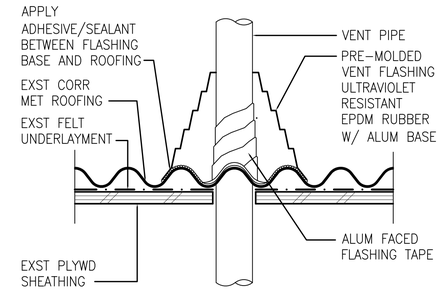

S A3 A3 VENT PIPE FLASHING DETAIL

3" = 1'-0"

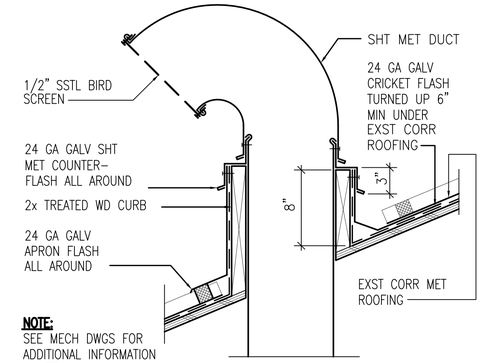

T A3 A3 GOOSENECK DUCT FLASH DETAIL

1 1/2" = 1'-0"

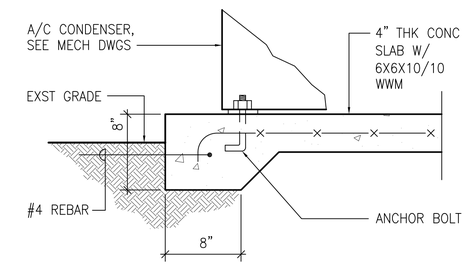

O A2 A3 A/C CONC PAD DETAIL

1 1/2" = 1'-0"

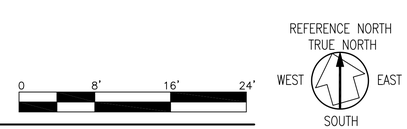

This work was prepared by me or under my supervision and construction of this project will be under my observation.

Signature — Expiration Date of the License: 4/30/2012

GLENN E. MASON — LICENSED PROFESSIONAL ARCHITECT No. 4073 — HAWAII, U.S.A.

DESIGNED: WL	SUB SHEET NO.	TITLE OF SHEET	DRAWING NO.
CADD WL	A3	COMPLETE CURATORIAL FACILITY TO MEET COLLECTION MANAGEMENT STANDARD AND PROVIDE SAFE PUBLIC ACCESS	491/80037
TECH. REVIEW: GM		ROOF PLAN & DETAIL	PMIS/PKG NO. 98337
DATE: 8/4/10		KALAUPAPA NATIONAL HISTORICAL PARK	SHEET 4 OF 17

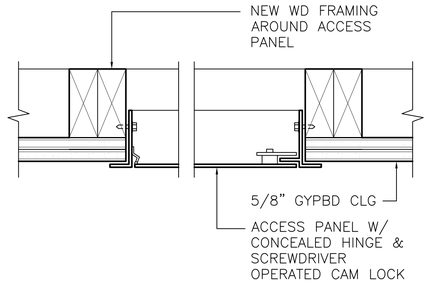

P A2 A4 ACCESS PANEL DETAIL
SCALE: 3" = 1'-0"

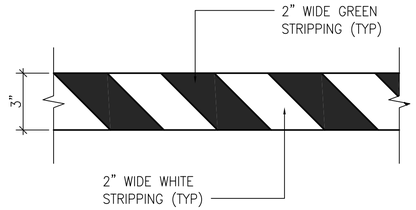

Q A2 A4 CLEARANCE BORDER DETAIL
SCALE: 3" = 1'-0"

MATERIAL INDEX

CODE	DESCRIPTION	MANUFACTURER/PATTERN/STYLE
PT 1	EPOXY COATING	COLOR TO MATCH SOUTH WING
PT 2	PAINT, EGGSHELL	BENJAMIN MOORE: HC-6 WINDHAM CREAM ACRYLIC/LATEX
PT 3	PAINT, EGGSHELL	BENJAMIN MOORE: ATRIUM WHITE ACRYLIC/LATEX
PT 4	PAINT, SEMI-GLOSS	BENJAMIN MOORE: COTTON BALLS ACRYLIC/LATEX
RB 1	4" RESILIENT BASE	FLEXCO: 035 DELFT PANSY

ROOM FINISH SCHEDULE

ROOM NAME	FLOOR	BASE	WALL	CEILING	
RECEIVING	PT 1	RB 1	PT 2	PT 3	
STORAGE	PT 1	RB 1	PT 2	PT 3	
DEEP FREEZE ROOM	PT 1	RB 1	PT 2	PT 3	
MECHANICAL ROOM	PT 1	RB 1	PT 2	PT 3	

MISCELLANEOUS

ALL INTERIOR DOORS AND CASING SHALL BE PAINTED PT 4

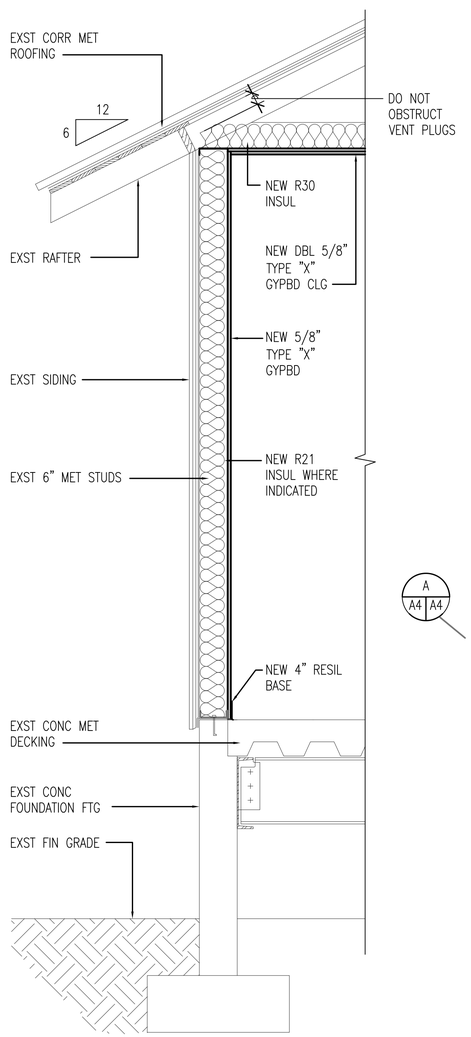

A A3 A4 TYP WALL SECTION
3/4"=1'-0"

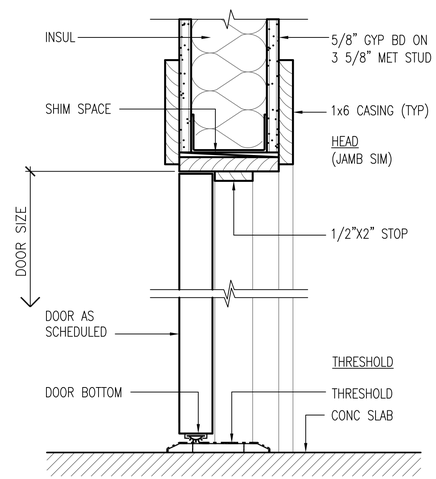

H A2 A4 DOOR DETAIL
SCALE: 3" = 1'-0"

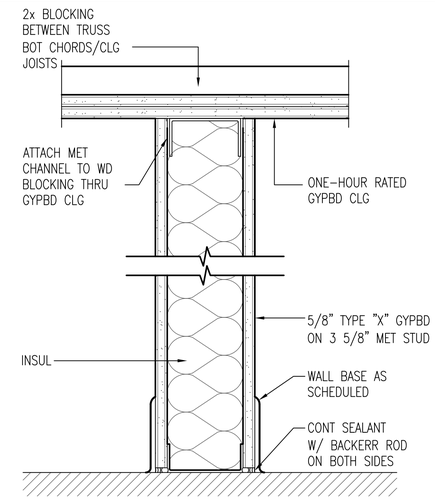

I A2 A4 PARTITION TYPE A
SCALE: 3" = 1'-0"

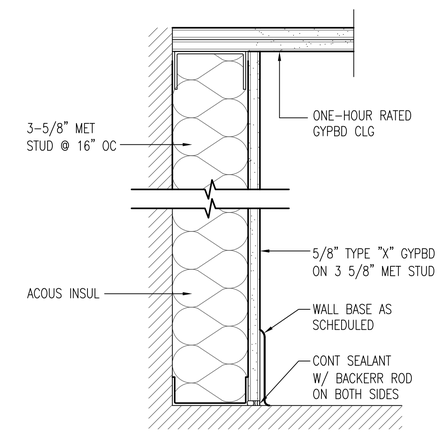

J A2 A4 PARTITION TYPE B
SCALE: 3" = 1'-0"

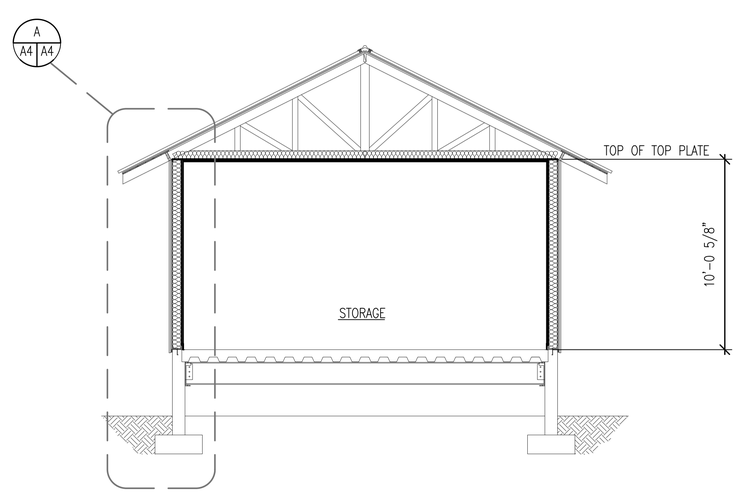

B A2 A4 BLDG CROSS SECTION
1/4"=1'-0"

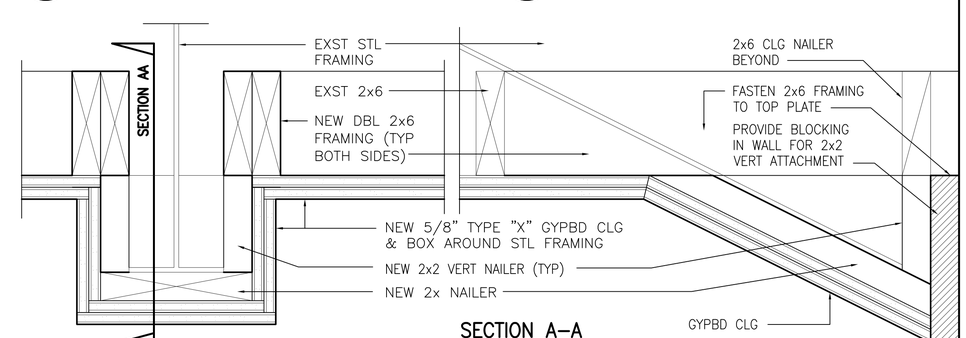

D A2 A4 STEEL BEAM WRAP DETAIL
SCALE: 3" = 1'-0"

This work was prepared by me or under my supervision and construction of this project will be under my observation.

Signature — Expiration Date of the License 4/30/2012

GLENN E. MASON LICENSED PROFESSIONAL ARCHITECT No. 4073 HAWAII, U.S.A.

DESIGNED: WL	SUB SHEET NO.	TITLE OF SHEET	DRAWING NO.
DADD WL	A4	COMPLETE CURATORIAL FACILITY TO MEET COLLECTION MANAGEMENT STANDARD AND PROVIDE SAFE PUBLIC ACCESS	491/80037
TECH. REVIEW: GM		BLDG CROSS SECTION, TYPICAL WALL SECTION, ROOM FINISH SCHEDULE, MATERIAL INDEX & DETAILS	PMIS/PKG NO. 98337
DATE: 8/4/10		KALAUPAPA NATIONAL HISTORICAL PARK	SHEET 5 OF 17

AIR COOLED CONDENSING UNIT SCHEDULE

UNIT NO	MANUFACTURER AND MODEL	LOCATION	COOLING CAPACITY TONS	AMBIENT AIR TEMP °F	REFR TYPE	SATURATED SUCTION TEMP °F	TOTAL CFM	FAN MOTOR			COMPRESSORS					CAPACITY REDUCTION PERCENT	OPR WT POUNDS	REMARKS
								NO	HP	FLA EACH	NO	RLA EACH	LRA EACH	VOLTS	ϕ			
ACCU-2	CARRIER 38HDR030	EXTERIOR	2.5	95	R-410A	40	3900	1	1/4	1.5	1	14.1	73.0	230	1	–	200	SOUND POWER = 72 DBA

FAN COIL UNIT SCHEDULE

UNIT NO	MANUFACTURER AND MODEL	LOCATION	SENSIBLE COOL CAP BTU/HR	LATENT COOL CAP BTU/HR	TOTAL COOL CAP BTU/HR	SUPPLY AIR CFM	OUTSIDE AIR CFM	COIL FACE VELOCITY FPM (MAX)	NO ROWS	FINS PER INCH	ENT AIR TEMP °F		REFR TYPE	SATURATED SUCTION TEMP °F	FILTER			EXTERNAL SP INCHES	FAN RPM	HP	VOLTS	ϕ	OPR WT POUNDS	REMARKS
											DB	WB			TYPE	EFF	AREA SQ FT							
FCU-2	CARRIER FV4BNF003	STORAGE	21,300	5400	26,700	875	170	500	3	14.5	79.5	64.5	R-410A	40	1" TA	25%	3.46	0.65	–	1/6	230	1	150	PROVIDE SECONDARY DRAIN PAN WITH MOISTURE SENSOR BENEATH FCU AND REFRIGERANT COIL CONNECTION

GENERAL NOTES:

1. ALL WORK SHOWN ON THESE DRAWINGS ARE NEW UNLESS OTHERWISE NOTED.
2. EXISTING CONDITIONS AND DIMENSIONS SHOWN ON THESE DRAWINGS ARE APPROXIMATE, BIDDERS SHALL VISIT THE PREMISES AND THOROUGHLY FAMILIARIZE THEMSELVES WITH ALL DETAILS OF WORK AND WORKING CONDITIONS BEFORE SUBMITTING THEIR BID. REASONABLE MODIFICATIONS IN LOCATION AND ARRANGEMENTS TO SUIT JOB CONDITIONS SHALL NOT CONSTITUTE BASIS FOR REQUESTING OF ADDITIONAL FUNDS FROM THE OWNER.
3. PRIOR TO ORDERING MATERIALS AND PROCURING EQUIPMENT, SUCCESSFUL BIDDER (CONTRACTOR) SHALL BE REQUIRED TO VERIFY ALL EXISTING CONDITIONS, INCLUDING BUT NOT LIMITED TO EQUIPMENT, MATERIALS, SIZES, DIMENSIONS, INVERTS, AND VOLTAGES THAT AFFECT HIS WORK. SUBMIT A LETTER TO THE ENGINEER CONFIRMING THAT THIS WAS DONE. IF WRITTEN CONFIRMATION IS NOT RECEIVED BY THE ENGINEER, SHOP DRAWINGS AND OTHER SUBMITTALS WILL BE RETURNED WITHOUT REVIEW. SHOW ALL DISCREPANCIES ON SHOP DRAWINGS AND NOTIFY THE ENGINEER IN WRITING OF SUCH DISCREPANCIES PRIOR TO PROCUREMENT.
4. EXISTING UTILITY LATERAL LOCATIONS ARE CRITICAL WHERE BUILDING UTILITIES CONNECT TO EXISTING, CONTRACTOR SHALL VERIFY THE EXACT LOCATION (BY TONING) AND INVERTS (BY EXCAVATION), BEFORE ORDERING MATERIALS.
5. ALL UTILITIES AND APPURTENANCES SHALL BE PROTECTED AT ALL TIMES DURING CONSTRUCTION, AND IF DAMAGED, SHALL BE REPAIRED BY THE CONTRACTOR AT NO COST TO OWNER.
6. FOR ALL FLOOR, WALL PARTITION, CEILING AND ROOF PENETRATIONS, SEE ARCHITECTURAL DRAWINGS FOR DETAILS.
7. NO CUTTING OR DRILLING OF ANY STRUCTURAL MEMBERS WILL BE PERMITTED WITHOUT THE APPROVAL OF THE STRUCTURAL ENGINEER. REFER TO STRUCTURAL DRAWING DETAILS FOR ALL MECHANICAL EQUIPMENT AND PIPING ATTACHMENTS TO STRUCTURAL MEMBERS.
8. ALL FASTENERS, SUPPORTS, PIPE HANGERS, AND MISCELLANEOUS STEEL ITEMS INCLUDING BUT NOT LIMITED TO BOLTS, NUTS, SCREWS, RODS, PLATES, AND ANGLES, ETC. SHALL BE GALVANIZED UNLESS OTHERWISE NOTED OR SPECIFIED.
9. PAINT ALL EXPOSED PIPING; COLOR PER SPECIFICATION. PROVIDE ESCUTCHEONS WHERE ALL EXPOSED PIPING PENETRATES FINISHED WALLS, FLOORS, AND CEILINGS.

FIRE PROTECTION NOTES:

1. CONTRACTOR SHALL PERFORM THE FOLLOWING BEFORE INSTALLATION:
   - A. SUBMIT SIX (6) SETS OF COMPLETE WORKING DRAWINGS TO THE ENGINEER FOR REVIEW AND APPROVAL.
   - B. SUBMIT SIX (6) SETS OF HYDRAULIC CALCULATIONS TO THE ENGINEER FOR REVIEW AND APPROVAL. IF COMPUTER CALCULATIONS ARE USED, SUBMITTAL SHALL INCLUDE LEGEND OF ALL ABBREVIATIONS AND STEP-BY-STEP DETAILED EXPLANATION OF PRINTOUTS. INCOMPLETE SUBMITTAL WILL BE RETURNED WITHOUT REVIEW.
   - C. HYDRAULIC CALCULATION SHALL ADD 10% SAFETY FACTOR TO TOTAL REQUIRED WATER PRESSURE AT REQUIRED FLOW.
   - D. ALL DRAWINGS AND CALCULATIONS SHALL BE STAMPED BY HAWAII INSURANCE RATING BUREAU AND FIRE SPRINKLER CONTRACTOR'S LICENSED ENGINEER.
2. PROVIDE COMPLETE WET PIPE FIRE SPRINKLER PROTECTION FOR ENTIRE BUILDING PER NFPA 13 AND IBC.
   - A. OCCUPANCY HAZARD CLASSIFICATION SHALL BE LIGHT UNLESS OTHERWISE NOTED.
3. SITE WATER DATA:

   CONTRACTOR SHALL PERFORM AN NFPA 291 COMPLIANT FIRE FLOW TEST OF THE TWO CLOSEST FIRE HYDRANTS TO ASCERTAIN WATER DISTRIBUTION SYSTEM CAPABILITY TO ENSURE SYSTEM WILL PROVIDE SUFFICIENT FLOW AND PRESSURE FOR SPRINKLER EXTENSION.
4. FIRE SPRINKLER HEADS AND PIPING INDICATED ON FLOOR PLANS ARE INTENDED TO SHOW GENERAL ROUTING OF PIPING AND TO PROVIDE CONTROL OF CEILING APPEARANCE. THEY SHOULD NOT BE INTERPRETED TO MEAN COMPLETE LAYOUT OF SPRINKLER SYSTEM. FIRE SPRINKLER HEAD LOCATIONS SHALL NOT BE ALTERED EXCEPT WITH THE APPROVAL OF THE ARCHITECT AND ENGINEER AND NPS AHJ'S APPROVAL.
5. WHERE FIRE SPRINKLER HEADS ARE NOT SHOWN, THE CONTRACTOR SHALL DESIGN AND INSTALL A COMPLETE LAYOUT OF FIRE SPRINKLER HEADS TO PROVIDE AN EFFICIENT LAYOUT AND COVERAGE.
6. ALL SHUT-OFF VALVES THAT CONTROL WATER SUPPLY TO THE FIRE SPRINKLER SYSTEM OR PORTIONS THEREOF SHALL BE PROVIDED WITH GALVANIZED CHAIN AND SOLID BRASS LOCK.
7. WHEN VALVES ARE INSTALLED IN A HORIZONTAL POSITION, VALVE STEM SHALL BE INSTALLED IN A UPRIGHT POSITION. IF THIS IS NOT POSSIBLE BECAUSE OF SPACE AND HEADROOM CONSTRAINTS, VALVE STEM SHALL BE INSTALLED IN AN INCLINED POSITION ABOVE THE HORIZONTAL CENTERLINE OF THE PIPE.
8. PROVIDE SPARE SPRINKLER HEADS, PROPER STOPPERS, AND SPECIAL SPRINKLER WRENCH STORED IN A METAL CABINET. CABINET SHALL BE TURNED OVER TO THE OWNER. SPRINKLER WRENCH TO BE USED IN THE REMOVAL AND INSTALLATION OF SPRINKLER HEADS PER UFC, 1988, AMENDED SECTION 10.308 (a).
9. PROVIDE SEISMIC PROTECTION FOR PIPING TO PREVENT DAMAGE FROM EARTHQUAKES, PER NFPA 13.

MECHANICAL LEGEND:

ACCU	AIR COOLED CONDENSING UNIT
AFF	ABOVE FINISHED FLOOR
AHJ	AUTHORITY HAVING JURISDICTION
AP	ACCESS PANEL
CD	CEILING DIFFUSER
CDR	CONDENSATE DRAIN
CFM	CUBIC FOOT PER MINUTE
CHW	CHILLED WATER
CLG	CEILING
CO	CLEANOUT
CONN	CONNECT OR CONNECTION
CONT	CONTINUATION
CV	CHECK VALVE
CW	COLD WATER
EXST	EXISTING
FCO	FLOOR CLEANOUT
FCU	FAN COIL UNIT
FD	FLOOR DRAIN
FDC	FIRE DEPARTMENT CONNECTION
FE	FIRE EXTINGUISHER
FEC-SR	FIRE EXTINGUISHER CABINET – SEMI-RECESSED
FLXC	FLEXIBLE CONNECTOR
FSPK	FIRE SPRINKLER
GC	GENERAL CONTRACTOR
	HUMIDISTAT
HB	HOSE BIBB
HW	HOT WATER
IWH	INSTANTANEOUS WATER HEATER
LAV	LAVATORY
NIC	NOT IN CONTRACT
OA	OUTSIDE AIR
OPR WT	OPERATING WEIGHT
OFCI	OWNER FURNISHED, CONTRACTOR INSTALLED
	PENDENT FIRE SPRINKLER HEAD
RL	REFRIGERANT LIQUID
RR	RETURN REGISTER
RS	REFRIGERANT SUCTION
S OR W	SOIL OR WASTE
SP	STATIC PRESSURE
SS	SERVICE SINK
	THERMOSTAT
TERM	TERMINATE
TYP	TYPICAL
V	VENT
VD	VOLUME DAMPER
VTR	VENT THRU ROOF
WC	WATER CLOSET
WCO	WALL CLEANOUT
WHA	WATER HAMMER ARRESTER

THIS WORK WAS PREPARED BY ME OR UNDER MY SUPERVISION AND CONSTRUCTION OF THIS PROJECT WILL BE UNDER MY OBSERVATION.
MECHANICAL ENGINEERS OF HAWAII
04/30/12
Expiration Date of the License

LOUIS T. L. CHENG
LICENSED PROFESSIONAL ENGINEER
No. 3684-M
HAWAII, U.S.A.

DESIGNED:	SUB SHEET NO.	TITLE OF SHEET	DRAWING NO.
JK CADD KY TECH. REVIEW: LC DATE: 8/4/10	M-1	**COMPLETE CURATORIAL FACILITY TO MEET COLLECTION MANAGEMENT STANDARD AND PROVIDE SAFE PUBLIC ACCESS** EQUIPMENT SCHEDULES, GENERAL NOTES, FIRE PROTECTION NOTES, AND MECHANICAL LEGEND KALAUPAPA NATIONAL HISTORICAL PARK	491/80037 PMIS/PKG NO. 98337 SHEET 6 OF 17

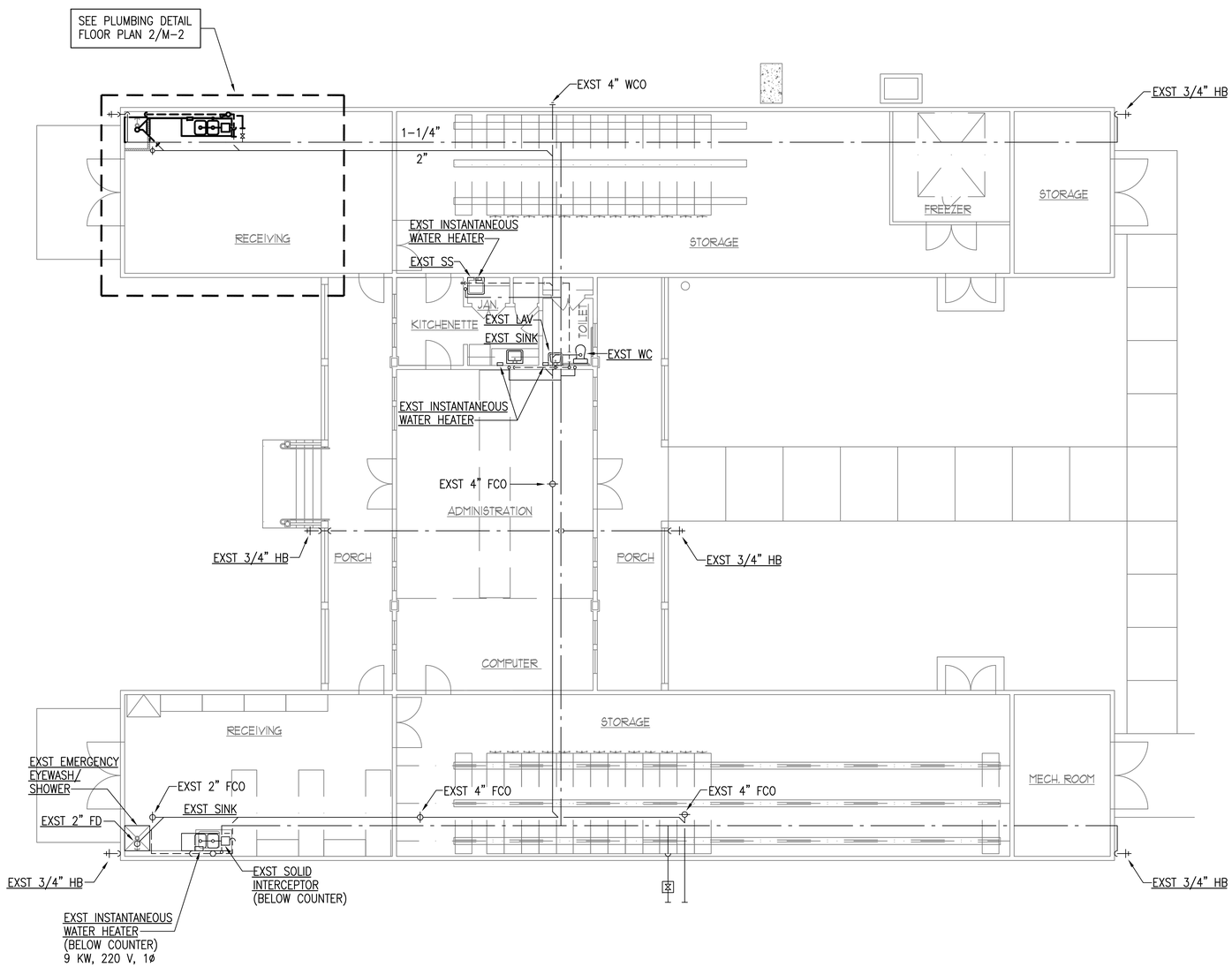

1 M-2 PLUMBING FLOOR PLAN
SCALE: 1/8" = 1'-0"

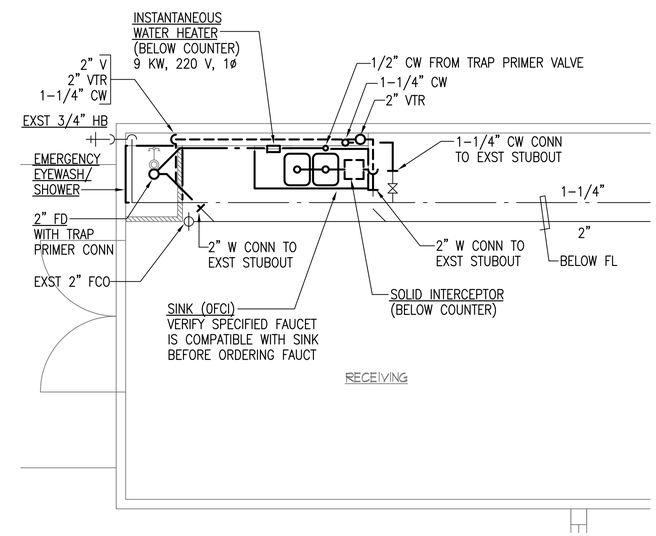

2 M-2 PLUMBING DETAIL FLOOR PLAN
SCALE: 1/4" = 1'-0"

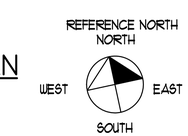

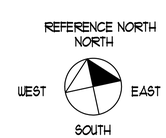

THIS WORK WAS PREPARED BY ME OR UNDER MY SUPERVISION AND CONSTRUCTION OF THIS PROJECT WILL BE UNDER MY OBSERVATION.
MECHANICAL ENGINEERS OF HAWAII
04/30/12
Expiration Date of the License

LOUIS T. L. CHENG
LICENSED PROFESSIONAL ENGINEER
No. 3684-M
HAWAII, U.S.A.

DESIGNED: JK	SUB SHEET NO.	TITLE OF SHEET	DRAWING NO.
DADP KY	M-2	COMPLETE CURATORIAL FACILITY TO MEET COLLECTION MANAGEMENT STANDARD AND PROVIDE SAFE PUBLIC ACCESS	491/80037
TECH. REVIEW: LC		PLUMBING FLOOR PLANS	PMIS/PKG NO. 98337
DATE: 8/4/10		KALAUPAPA NATIONAL HISTORICAL PARK	SHEET 7 OF 17

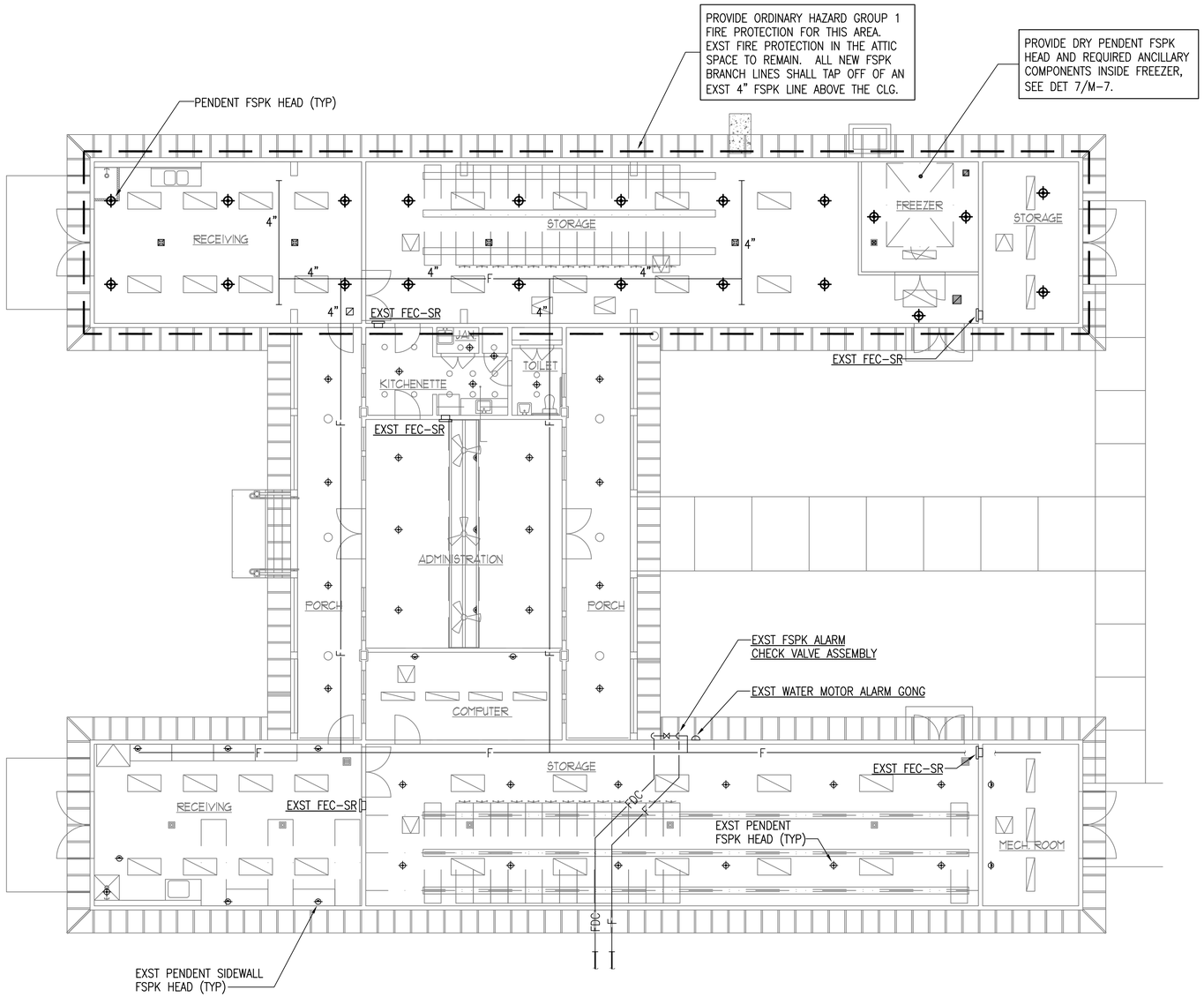

1 / M-3 FIRE PROTECTION PLAN
SCALE: 1/8" = 1'-0"

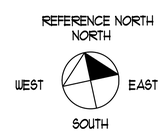

THIS WORK WAS PREPARED BY ME OR UNDER MY SUPERVISION AND CONSTRUCTION OF THIS PROJECT WILL BE UNDER MY OBSERVATION.
MECHANICAL ENGINEERS OF HAWAII
04/30/12
Expiration Date of the License

LOUIS T. L. CHENG
LICENSED PROFESSIONAL ENGINEER
No. 3684-M
HAWAII, U.S.A.

DESIGNED: JK	SUB SHEET NO.	TITLE OF SHEET	DRAWING NO.
CADD KY	M-3	COMPLETE CURATORIAL FACILITY TO MEET COLLECTION MANAGEMENT STANDARD AND PROVIDE SAFE PUBLIC ACCESS	491/80037
TECH. REVIEW: LC		FIRE PROTECTION PLAN	PMIS/PKG NO. 98337
DATE: 8/4/10		KALAUPAPA NATIONAL HISTORICAL PARK	SHEET 8 OF 17

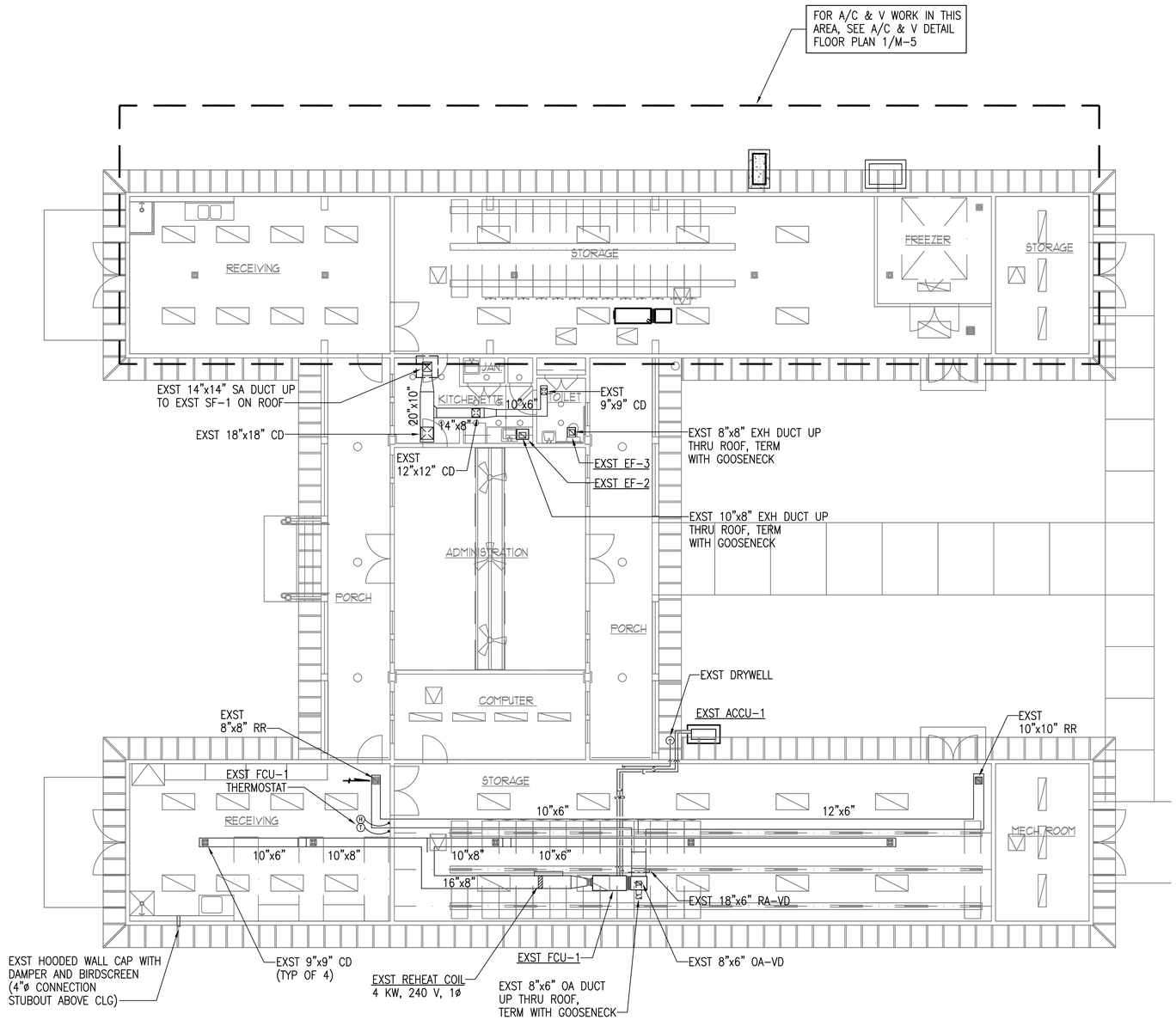

1 / M-4 A/C & V FLOOR PLAN

SCALE: 1/8" = 1'-0"

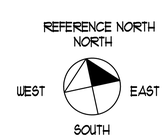

THIS WORK WAS PREPARED BY ME OR UNDER MY SUPERVISION AND CONSTRUCTION OF THIS PROJECT WILL BE UNDER MY OBSERVATION.

MECHANICAL ENGINEERS OF HAWAII

04/30/12
Expiration Date of this License

LOUIS T. L. CHENG
LICENSED PROFESSIONAL ENGINEER
No. 3684-M
HAWAII, U.S.A.

DESIGNED: JK CADD KY TECH. REVIEW: LC DATE: 8/4/10	SUB SHEET NO. M-4	TITLE OF SHEET **COMPLETE CURATORIAL FACILITY TO MEET COLLECTION MANAGEMENT STANDARD AND PROVIDE SAFE PUBLIC ACCESS** A/C & V FLOOR PLAN KALAUPAPA NATIONAL HISTORICAL PARK	DRAWING NO. 491/80037 PMIS/PKG NO. 98337 SHEET 9 OF 17

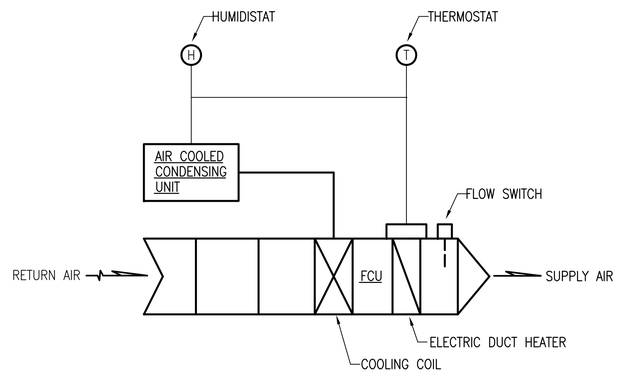

NOTES:

1. HUMIDISTAT SHALL CONTROL AIR COOLED CONDENSING UNIT TO MAINTAIN ROOM HUMIDITY.
2. THERMOSTAT SHALL CONTROL BOTH COOLING COIL & ELECTRIC DUCT HEATER TO MAINTAIN ROOM TEMPERATURE.
3. INTERLOCK ELECTRIC DUCT HEATER WITH AIR FLOW SWITCH.

2 / M-5 TEMPERATURE AND HUMIDITY CONTROLS

NOT TO SCALE

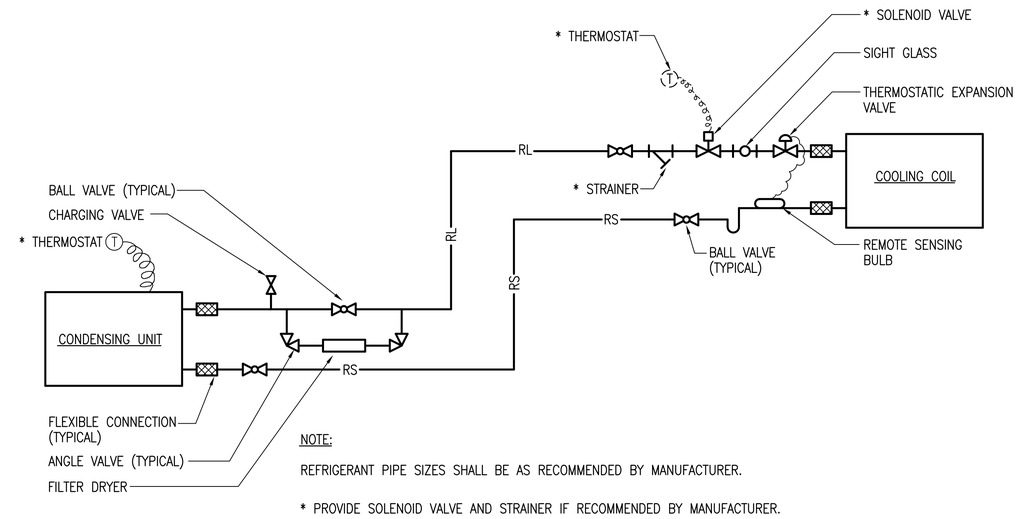

NOTE:

REFRIGERANT PIPE SIZES SHALL BE AS RECOMMENDED BY MANUFACTURER.

* PROVIDE SOLENOID VALVE AND STRAINER IF RECOMMENDED BY MANUFACTURER.

3 / M-5 SCHEMATIC REFRIGERANT PIPING DIAGRAM

NOT TO SCALE

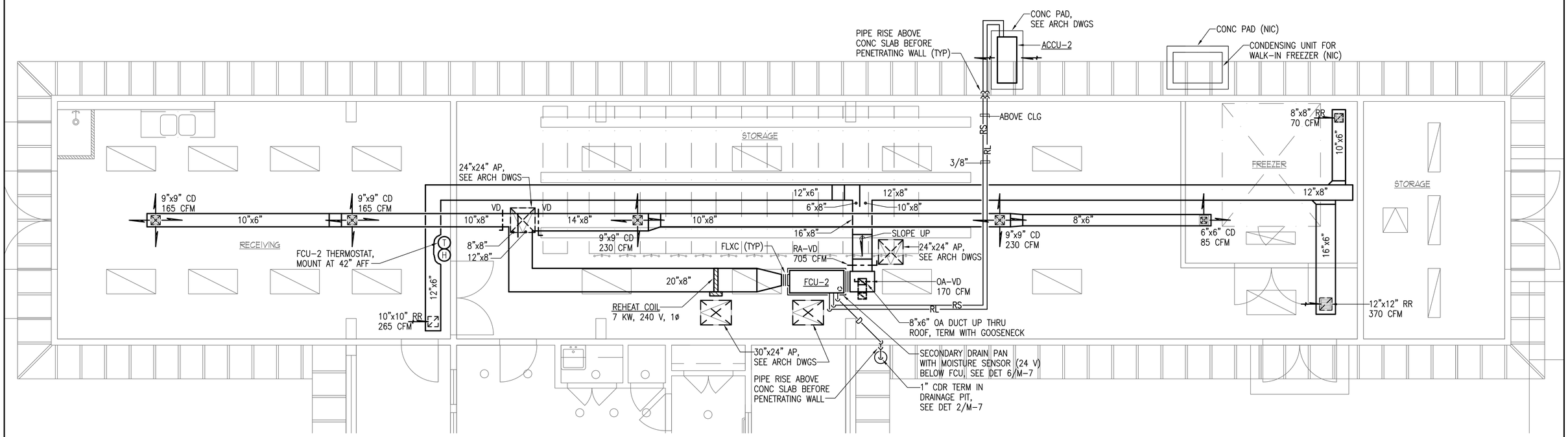

NOTE:

MAINTAIN REQUIRED SERVICE CLEARANCES AROUND THE CONDENSING UNITS AS RECOMMENDED BY THEIR RESPECTIVE MANUFACTURERS.

1 / M-5 A/C & V DETAIL FLOOR PLAN

SCALE: 1/4" = 1'-0"

REFERENCE NORTH
NORTH
WEST
EAST
SOUTH

THIS WORK WAS PREPARED BY ME OR UNDER MY SUPERVISION AND CONSTRUCTION OF THIS PROJECT WILL BE UNDER MY OBSERVATION.
MECHANICAL ENGINEERS OF HAWAII
04/30/12
Expiration Date of the License

LOUIS T. L. CHENG
LICENSED PROFESSIONAL ENGINEER
No. 3684-M
HAWAII, U.S.A.

DESIGNED:	SUB SHEET NO.	TITLE OF SHEET	DRAWING NO.
JK	M-5	COMPLETE CURATORIAL FACILITY TO MEET COLLECTION MANAGEMENT STANDARD AND PROVIDE SAFE PUBLIC ACCESS	491/80037
CADD KY		A/C & V DETAIL FLOOR PLAN AND SCHEMATICS	PMIS/PKG NO. 98337
TECH. REVIEW: LC			SHEET
DATE: 8/4/10		KALAUPAPA NATIONAL HISTORICAL PARK	10 OF 17

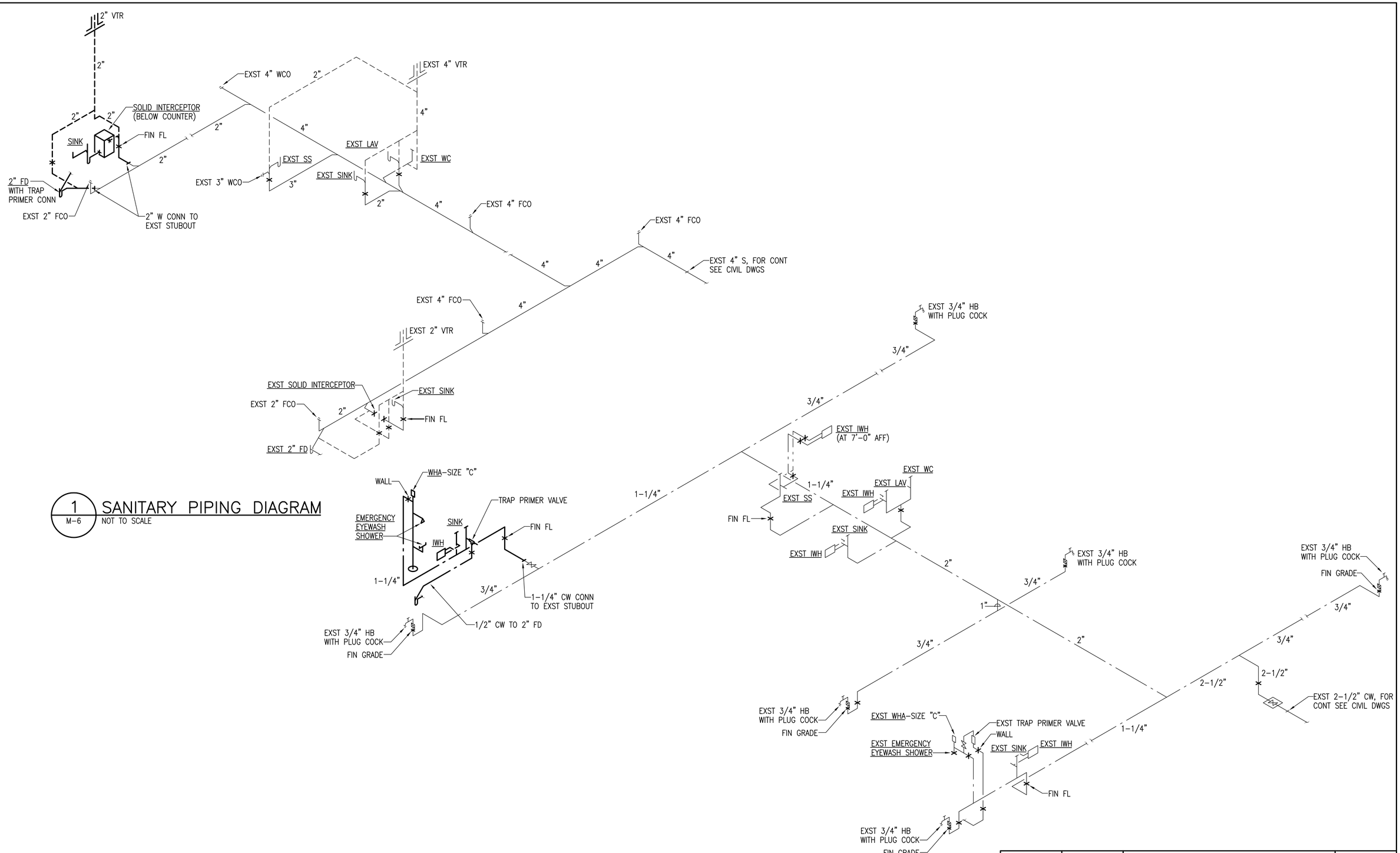

1 M-6 SANITARY PIPING DIAGRAM
NOT TO SCALE

2 M-6 WATER PIPING DIAGRAM
NOT TO SCALE

THIS WORK WAS PREPARED BY ME OR UNDER MY SUPERVISION AND CONSTRUCTION OF THIS PROJECT WILL BE UNDER MY OBSERVATION.
MECHANICAL ENGINEERS OF HAWAII
04/30/12
Expiration Date of the License

LOUIS T. L. CHENG
LICENSED PROFESSIONAL ENGINEER
No. 3684-M
HAWAII, U.S.A.

DESIGNED:	SUB SHEET NO.	TITLE OF SHEET	DRAWING NO.
JK	M-6	COMPLETE CURATORIAL FACILITY TO MEET COLLECTION MANAGEMENT STANDARD AND PROVIDE SAFE PUBLIC ACCESS	491/80037
CADD KY		PIPING DIAGRAMS	PMIS/PKG NO. 98337
TECH. REVIEW: LC			SHEET
DATE: 8/4/10		KALAUPAPA NATIONAL HISTORICAL PARK	11 OF 17

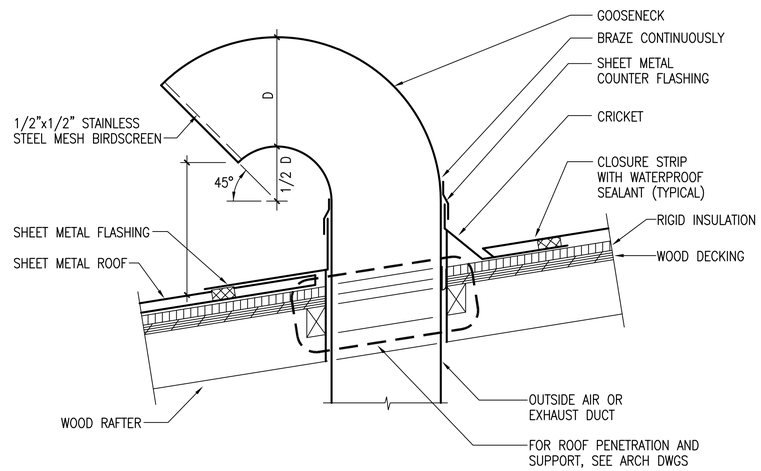

1 / M-7 GOOSENECK ON SLOPED ROOF DETAIL

NOT TO SCALE

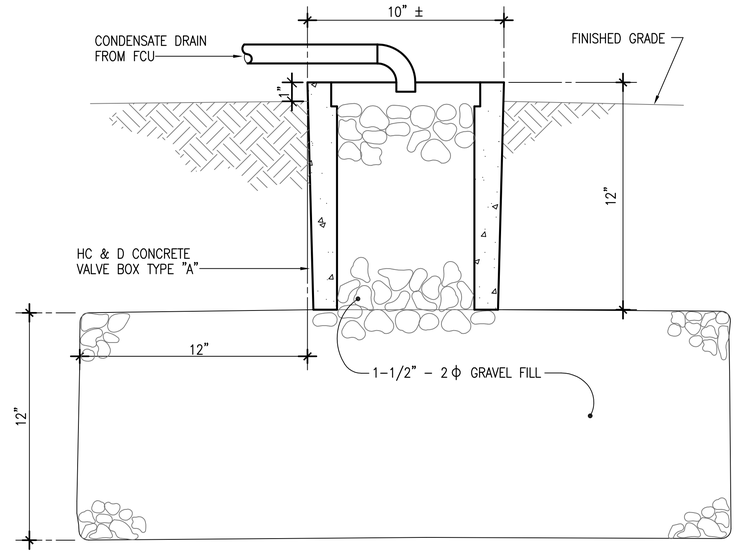

2 / M-7 DRAINAGE PIT DETAIL

NOT TO SCALE

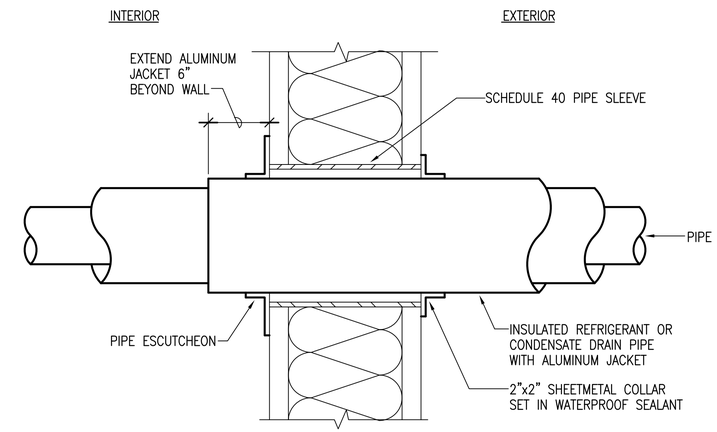

NOTE:

INSTALLATION OF UNINSULATED PIPE SIMILAR.

3 / M-7 INSULATED PIPE THRU WALL DETAIL

NOT TO SCALE

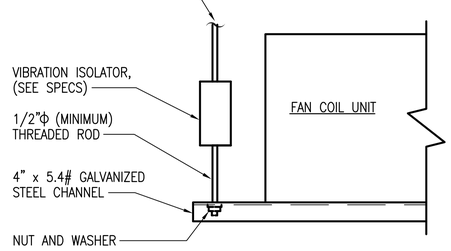

4 / M-7 TYPICAL FCU HANGER DETAIL

NOT TO SCALE

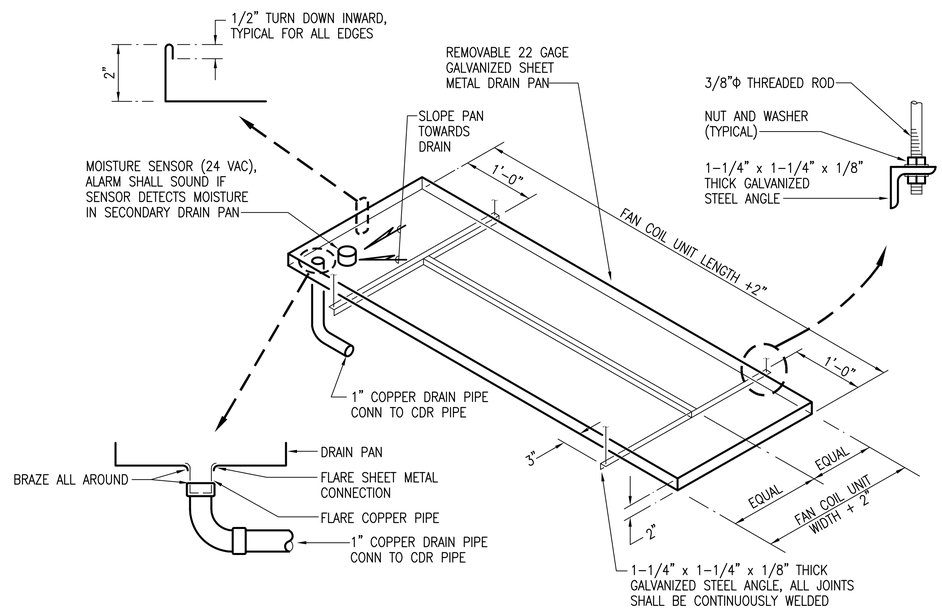

6 / M-7 SECONDARY CONDENSATE DRAIN PAN DETAIL

NOT TO SCALE

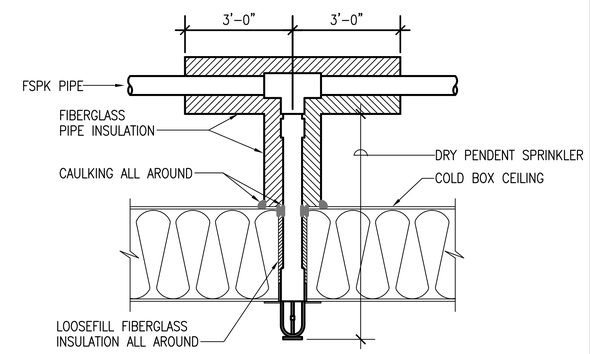

7 / M-7 DRY PENDENT SPRINKLER HEAD THRU COLD BOX DETAIL

NOT TO SCALE

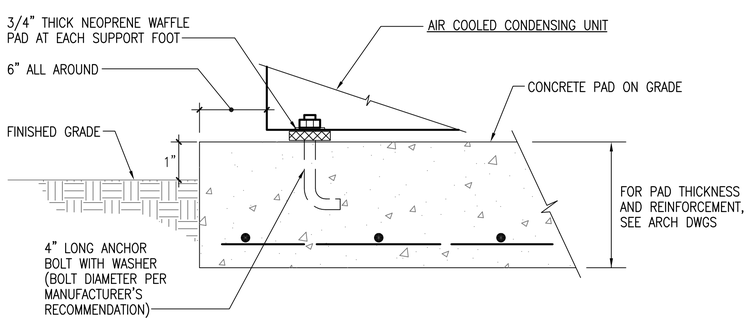

5 / M-7 AIR COOLED CONDENSING UNIT MOUNTING DETAIL

NOT TO SCALE

THIS WORK WAS PREPARED BY ME OR UNDER MY SUPERVISION AND CONSTRUCTION OF THIS PROJECT WILL BE UNDER MY OBSERVATION.

MECHANICAL ENGINEERS OF HAWAII

04/30/12
Expiration Date of the License

LOUIS T. L. CHENG
LICENSED PROFESSIONAL ENGINEER
No. 3684-M
HAWAII, U.S.A.

DESIGNED: JK	SUB SHEET NO.	TITLE OF SHEET	DRAWING NO.
CADD KY	M-7	COMPLETE CURATORIAL FACILITY TO MEET COLLECTION MANAGEMENT STANDARD AND PROVIDE SAFE PUBLIC ACCESS	491/80037
TECH. REVIEW: LC		DETAILS	PMIS/PKG NO. 98337
DATE: 8/4/10		KALAUPAPA NATIONAL HISTORICAL PARK	SHEET 12 OF 17

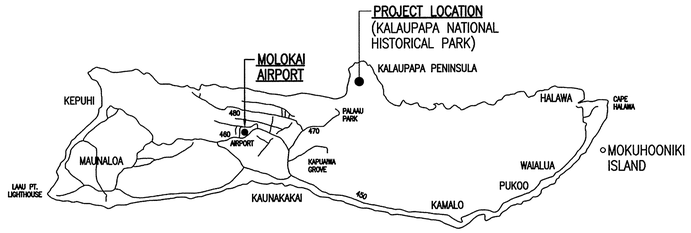

ISLAND OF MOLOKAI

NOT TO SCALE

ABBREVIATIONS

A	AMPERE
AC	AIR CONDITIONING OR ALTERNATING CURRENT
ACCU	AIR COOLED CONDENSING UNIT
__AF	AMPERE FRAME
AIC	AMPERE INTERRUPTING CAPACITY
__AT	AMPERE TRIP
AUTO	AUTOMATIC
C	CONDUIT
CO	CONDUIT ONLY
D	DEEP
(E)	EXISTING
E, ELEC	ELECTRIC, ELECTRICAL
EF__	EXHAUST FAN
EL	ELEVATION, EVENING LIGHTS
EMT	ELECTRICAL METALLIC TUBING
EP	ELECTRICAL PRIMARY
ES	ELECTRICAL SECONDARY
FA	FIRE ALARM
FACP	FIRE ALARM CONTROL PANEL
FCU_	FAN COIL UNIT__
G, GND	GROUND
GFIC	GROUND FAULT INTERRUPTING CAPABILITY
H	HORIZONTAL OR HIGH
JBX	JUNCTION BOX
KV	KILO-VOLT
KVA	KILO-VOLT AMPERE
KWH	KILO-WATT HOUR
L	LIGHTS, LIGHTING, LONG, LENGTH
LTFMC	LIQUIDTIGHT FLEXIBLE METAL CONDUIT
N	NEUTRAL
(N)	NEW
NEC	NATIONAL ELECTRICAL CODE
NFSS	NON-FUSED SAFETY SWITCH
NTS	NOT TO SCALE
NPS	NATIONAL PARK SERVICE
OH	OVERHEAD
__P	POLE
PBX	PULLBOX
PFFB	PROVISIONS FOR FUTURE BREAKER
PH	PHASE
PNLBD	PANELBOARD
R	RECEPTACLE
RMC	RIGID METAL CONDUIT (STEEL)
RNMC	RIGID NON-METALLIC CONDUIT (SCH 40 PVC UNLESS OTHERWISE INDICATED)
(TYP)	TYPICAL
U/C	UNDER COUNTER
UG	UNDERGROUND
V	VOLTS, VERTICAL
W	WIRE(S), WIDE, WATTS
WP	WEATHERPROOF
_W.x_H.x_L.	W.=WIDE, H.=HIGH, L.=LONG OR LENGTH
_W.x_H.x_D.	W.=WIDE, H.=HIGH, D.=DEEP OR DEPTH

ELECTRICAL PLAN SYMBOLS

*	* – EQUIPMENT AS IDENTIFIED
	PANELBOARD
	NON-FUSED SAFETY SWITCH
T	TRANSFORMER
	CONCEALED WIRING IN CEILING OR WALL. WHERE USED, HASH LINES INDICATE QTY OF WIRES
	CONCEALED WIRING BELOW FINAL GRADE, BELOW FLOOR, OR IN FLOOR SLAB
	EXPOSED WIRING
	FLEXIBLE METAL CONDUIT, LIQUIDTIGHT
HR A1	HOMERUN AND CIRCUITING INDICATOR. HASH LINES=QTY. OF CONDUCTORS, A-PNLBD, 1-CIR. NO.
A1	CIRCUITING INDICATOR. HASH LINES = QTY. OF CONDUCTORS, A-PNLBD, 1-CIR. NO., (HOMERUN/HOMERUN GROUPINGS ARRANGED BY CONTRACTOR)
	WIRING TO BE DISCONNECTED/REMOVED AS IDENTIFIED
	EQUIPMENT/DEVICE TO BE DISCONNECTED/REMOVED AS IDENTIFIED
3	DUPLEX RECEPTACLE OUTLET, 125 VOLT, SINGLE PHASE (3 = PANELBOARD CIRCUIT NUMBER)
	250 VOLT RECEPTACLE OUTLET (RATING OR USE AS INDICATED)
S_a	LIGHTING SWITCH OUTLET [a = CONTROLLED LIGHTING FIXTURE(S)], S-SINGLE POLE, S2-DOUBLE POLE SINGLE THROW, S3-SINGLE POLE DOUBLE THROW, S4-DOUBLE POLE DOUBLE THROW
$3a$	LIGHTING FIXTURE/OUTLETS, CEILING MOUNTED, INCANDESCENT, FLUORESCENT, OR HID, SURFACE OR RECESSED AS INDICATED. (a = SWITCH IDENT., 3 = CIR. NO.) (* = TYPE IDENT BY NUMBER)
	LIGHTING FIXTURE/OUTLET, WALL MOUNTED, INCANDESCENT, FLUORESCENT, OR HID, SURFACE OR FLUSH, AS INDICATED. (* = TYPE IDENT BY NUMBER)
	LIGHTING FIXTURE/OUTLET, CEILING MOUNTED, FLUORESCENT, ENCLOSED LAMP, SURFACE OR RECESSED, AS INDICATED. (* = TYPE IDENT BY NUMBER)
J *	EQUIPMENT OR OTHER ELECTRICAL CONNECTION AS INDICATED
*	CONTROL DEVICE OR ITEM CONNECTION AS IDENTIFIED
M	MOTOR CONNECTION, ANY HP, VOLTAGE, PHASE
F	FIRE ALARM MANUAL INITIATING STATION
F	FIRE ALARM INDICATING APPLIANCES (AUDIO)
F	FIRE ALARM INDICATING APPLIANCES (VISUAL)
F F	COMBINATION FIRE ALARM INDICATING APPLIANCES (AUDIO/VISUAL)

GENERAL NOTES:

1. ALL ELECTRICAL ITEMS INDICATED ON THE DRAWINGS ARE NEW AND SHALL BE PROVIDED BY THE CONTRACTOR UNLESS INDICATED AS "EXISTING", OR AS OTHERWISE NOTED.
2. ALL LOCATIONS SHOWN ON THE DRAWING FOR ITEMS OF WORK TO BE FURNISHED AND/OR INSTALLED ARE APPROXIMATE. THE CONTRACTOR SHALL SELECT LOCATIONS TO SUIT FIELD CONDITIONS SUBJECT TO APPROVAL OF THE CONTRACTING OFFICER.
3. CONTRACTOR SHALL INDICATE ALL FINAL LOCATIONS ON THE "AS-BUILT" DRAWINGS WHERE THEY DIFFER FROM THAT SHOWN ON THE DRAWINGS.
4. CONTRACTOR SHALL BE RESPONSIBLE FOR COORDINATING THE WORK AMONG THE VARIOUS TRADES AS NECESSARY TO AVOID CONFLICTS AND TO INSURE THE INSTALLATION OF ALL WORK WITHIN THE AVAILABLE SPACE.
5. CONTRACTOR SHALL CHECK AND MAINTAIN ORIGINAL PHASE RELATIONSHIPS ON ALL CIRCUITS.
6. EXISTING CONDITIONS, MATERIALS, SIZES, LOCATIONS, AND DIMENSIONS SHOWN ON THESE DRAWINGS REPRESENT THE BEST AVAILABLE INFORMATION OBTAINED FROM FIELD INVESTIGATION. PRIOR TO ORDERING MATERIALS AND EQUIPMENT, THE CONTRACTOR SHALL VERIFY ALL EXISTING CONDITIONS, MATERIALS, SIZES, LOCATIONS, AND DIMENSIONS THAT AFFECT THE WORK OF THIS PROJECT. NOTIFY THE CONTRACTING OFFICER OF ALL QUESTIONS IN WRITING AND RESOLVE ALL CONTRACTOR'S QUESTIONS AND CONCERNS PRIOR TO PROCUREMENT AND BEFORE START OF CONSTRUCTION.
7. ALL EXPOSED CONDUITS AND FITTINGS, AND METAL PORTIONS OF EQUIPMENT ENCLOSURE SHALL BE FIELD PAINTED FOR CORROSION PROTECTION.
8. ALL EQUIPMENT SHALL BE PROPERLY MOUNTED, ANCHORED, AND SUPPORTED BY APPROVED METHODS FOR THE APPLICABLE SEISMIC DESIGN CATEGORY FOR THE COUNTY OF MAUI.

DEFINITIONS

PROVIDE- FURNISH AND INSTALL.
REPLACE – REMOVE AND PROVIDE NEW.
RESTORE – MATCH EXISTING TYPES, RATING, FUNCTIONS AT NEW LOCATION. RE-USE EXISTING WIRING IF CAN BE RELCATED WITHOUT SPLICING. PROVIDE ADDITIONAL NEW WIRING AND SPLICE TO EXISTING AND EXTEND TO NEW LOCATION WHERE APPLICABLE. FOR TELEPHONE/DATA/VIDEO WIRING, PROVIDE NEW HR'S IF NOT ABLE TO RELOCATE WITHOUT SPLICING.
RELOCATE – DISCONNECT, REMOVE, STORE, RE-INSTALL, RE-CONNECT, AND PLACE INTO CORRECT OPERATION ALL WITHOUT CAUSING ANY DAMAGE TO AFFECTED ITEMS.
WIRING – ALL CONDUITS, RACEWAYS, CONDUCTORS, FITTINGS, PULLBOXES, JUNCTION BOXES, OUTLET BOXES, DEVICES, AND OTHER MATERIALS OR ITEMS AS NECESSARY FOR A COMPLETED AND OPERATIONAL ELECTRICAL CIRCUIT OR SYSTEM; OR THAT WHICH COMPRISES AN ELECTRICAL CIRCUIT OR SYSTEM.
OUTLET – IN ADDITION TO DEFINITION IN THE NEC, OUTLET SHALL MEAN THE REQUIRED OUTLET BOXES, CONDUCTORS, TERMINATIONS, WIRING DEVICES, AND COVER PLATES, TO PROVIDE FOR THE INTENDED USE, APPLICATION, OR UTILIZATION EQUIPMENT.
REATTACH – REPLACE MOUNTING ATTACHMENT METHODS. REPLACE ALL MOUNTING HARDWARE, SCREWS, BOLTS, WASHERS, NUTS. MATCH EXISTING TYPES, SIZES, AND QUANTITIES. REPLACE ALL WIRING SPLICES, TERMINATIONS, CONNECTIONS. MATCH EXISTING TYPES, SIZES, AND QUANTITIES.
FIELD ROUTE – FINAL CONDUIT ROUTING SELECTED BY CONTRACTOR WITH ACCEPTANCE BY ENGINEER TO SUIT EXISTING SITE CONDITIONS AVOIDING INTERFERENCES WITH OTHER EQUIPMENT, PIPING, STRUCTURAL STEEL, STRUCTURAL WALLS, ETC, AND TO MATCH CONSTRUCTION METHOD DESIRED BY CONTRACTOR.
FIELD LOCATE – FINAL LOCATION ADJUSTED TO SUIT EXISTING FIELD CONDITIONS TO ACCOMIDATE CONTRACTORS CONSTRUCTION METHODS, WHILE COMPLYING WITH MINIMAL REQUIREMENTS OF NEC AND AS ACCEPTABLE TO ENGINEER. ALLOW FOR MINIMUM 10 FEET HORIZONTAL ADJUSTMENT WITHOUT ADDITIONAL COST AND/OR PROVIDE FOR THE ADDITIONAL ADJUSTMENTS WHERE NOTED.

DEMOLITION NOTES

1. THE CONTRACTOR SHALL COORDINATE ALL WORK WITH THE CONTRACTING OFFICER IN THE FIELD DURING THE ACTUAL DEMOLITION WORK TO RESOLVE ALL QUESTIONS WHERE APPLICABLE.
2. DISCONNECT AND REMOVE THE EXISTING ELECTRICAL ITEMS AND THEIR ASSOCIATED WIRING AS INDICATED.
3. EXISTING WIRING NOT RE-USED FOR NEW WORK OR NOT DESIGNATED AS "SPARES" SHALL BE REMOVED IN IT ENTIRETY.
4. ALL REMOVED ITEMS SHALL REMAIN THE PROPERTY OF THE GOVERNMENT. CONTRACTOR SHALL CONSULT THE OWNER FOR STORAGE AND/OR DISPOSAL INSTRUCTIONS.
5. ALL WIRING ASSOCIATED WITH ITEMS TO BE REMOVED SHALL BE DISCONNECTED AND REMOVED BACK TO LAST OVERCURRENT DEVICE, CONTROLLER, OR FIELD TERMINAL POINT.
6. DEVICE AND LIGHTING FIXTURE OUTLET BOXES NOT RE-USED FOR NEW WIRING SHALL BE COVERED WITH BLANK PLATES OR BOXES REMOVED AND OUTLET HOLE REPAIRED ARCHITECTURALLY.
7. THE CONTRACTOR SHALL COORDINATE/VERIFY ALL EXISTING BRANCH CIRCUITS AS APPLICABLE TO THE DEMOLITION WORK AND AS NECESSARY TO PROVIDE TEMPORARY POWER DURING THE VARIOUS PHASES OF CONSTRUCTION.
8. ALL EMBEDDED CONDUITS SHALL HAVE ALL WIRING REMOVED AND CONDUITS REMOVED OR ABANDONED AS APPLICABLE. ALL ABANDONED CONDUITS SHALL BE CAPPED AND/OR SEALED BY APPROVED METHODS.
9. IT SHALL BE THE CONTRACTOR'S RESPONSIBILITY TO VERIFY ALL EXISTING CONDITIONS. THE EXISTING CONDITIONS SHOWN ARE INTENDED TO BE AS COMPLETE AND ACCURATE AS POSSIBLE. HOWEVER, ALL ITEMS NOT SHOWN SHALL BE DEMOLISHED WHERE REQUIRED AT NO ADDITIONAL COST TO THE GOVERNMENT.

ELECTRICAL PLAN NOTES

1. ALL PLANS ARE DIAGRAMMATIC AND INDICATE LOCATIONS AND GENERAL REQUIREMENTS ONLY. ALL FINAL LOCATIONS SHALL BE DETERMINED BY THE CONTRACTOR SUBJECT TO ACCEPTANCE BY THE ENGINEER. ALL ROUTINGS FOR WIRING SHALL BE SELECTED AND DETERMINED BY THE CONTRACTOR, COMPLYING WITH ALL REQUIREMENTS OF THE NEC.
2. ALL PLANS ARE DIAGRAMMATIC AND SHOWS CIRCUITING AND HOMERUN REQUIREMENTS ONLY. WHERE A "HR" IS INDICATED, THE CONTRACTOR SHALL INSTALL THE HOMERUN CIRCUIT WIRING AS INDICATED. WHERE NO "HR" IS INDICATED, THE CONTRACTOR SHALL FIELD ARRANGE ALL HOMERUNS. CONDUITS AND CONDUCTORS SHALL BE SIZED PROPERLY PER NEC REQUIREMENTS DEPENDING ON THE HOMERUN GROUPINGS SELECTED BY THE CONTRACTOR.
3. ALL PANELBOARDS SHALL BE CIRCUITED AS INDICATED ON THE DRAWINGS. DO NOT CHANGE WITHOUT THE APPROVAL OF THE ENGINEER.
4. ALL PANELBOARDS SHALL HAVE TYPEWRITTEN DIRECTORIES AND IN THE FORMAT AS INDICATED ON THE SCHEDULES, I.E., SAME PHYSICAL ARRANGEMENT AS PANELBOARD.
5. PROVIDE A NEUTRAL CONDUCTOR FOR EACH SET OF PHASE CONDUCTORS.
6. PROVIDE A GROUNDING CONDUCTOR FOR ALL CIRCUITS. DO NOT USE CONDUIT OR RACEWAY FOR CIRCUIT GROUNDING.
7. PLANS MAY NOT ALWAYS INDICATE QUANTITY OF CONDUCTORS BY HASH MARKS. PROVIDE CONDUCTORS BASED ON CIRCUITING REQUIREMENTS AND GUIDELINES STATED ABOVE.
8. ALL REQUIREMENTS FOR MECHANICAL EQUIPMENT ITEMS SHALL BE COORDINATED WITH THE EQUIPMENT SHOP DRAWINGS FOR DETAILS OF INSTALLATION AND WIRING CONNECTIONS. THE CONTRACT DRAWINGS REPRESENT TYPICAL REQUIREMENTS WHICH MAY BE DIFFERENT FROM THE EQUIPMENT TO BE INSTALLED.
9. DRAWINGS ARE INTENDED TO BE COMPLETE AS TO GENERAL INTENT AND REQUIREMENTS BUT NOT TO ACTUAL DETAILS OF CONSTRUCTION, INSTALLATION, AND LOCATIONS.

DATE	ISSUE
8/17/10	FINAL FS .PDF
8/3/10	FINAL SUBMISSION
7/28/10	100% SUBMITTAL
6/4/10	75% SUBMITTAL

WALLACE T. OKI LICENSED PROFESSIONAL ENGINEER 3539-E HAWAII, U.S.A.

THIS WORK WAS PREPARED BY ME OR UNDER MY SUPERVISION

WALLACE T. OKI, P.E., INC.
ELECTRICAL ENGINEERING
688 KINOOLE ST., STE. 115B
HILO, HI. 96720 PH:961-9666

WTO REF NO. 102009146

DESIGNED: WTO
DADD: LHN
TECH. REVIEW: LTK
DATE: AUG 4, 2010

SUB SHEET NO. E1

TITLE OF SHEET
COMPLETE CURATORIAL FACILITY TO MEET COLLECTION MANAGEMENT STANDARD AND PROVIDE SAFE PUBLIC ACCESS

NOTES/SYMBOLS/ABBREVIATIONS

KALAUPAPA NATIONAL HISTORICAL PARK

DRAWING NO. 491/80037
PMIS/PKG NO. 98337
SHEET 13 OF 17

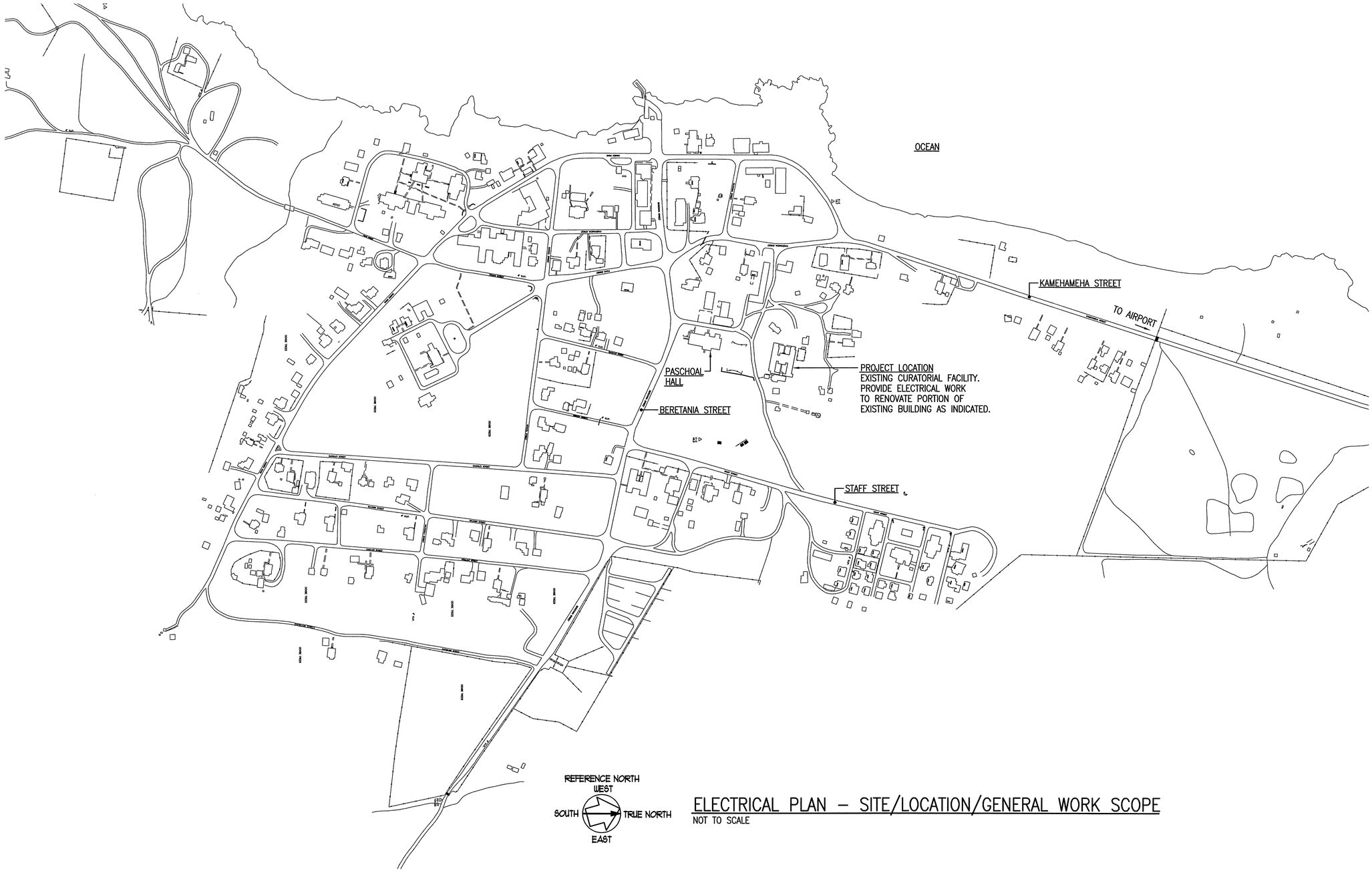

ELECTRICAL PLAN – SITE/LOCATION/GENERAL WORK SCOPE

NOT TO SCALE

WALLACE T. OKI
LICENSED PROFESSIONAL ENGINEER 3539-E
HAWAII, U.S.A.

THIS WORK WAS PREPARED BY ME OR UNDER MY SUPERVISION

WALLACE T. OKI, P.E., INC.
ELECTRICAL ENGINEERING
688 KINOOLE ST., STE. 115B
HILO, HI. 96720 PH:961-9666

WTO REF NO. 102009146

DESIGNED: WTO
CADD: LHN
TECH. REVIEW: LTK
DATE: AUG 4, 2010

SUB SHEET NO. E2

TITLE OF SHEET
COMPLETE CURATORIAL FACILITY TO MEET COLLECTION MANAGEMENT STANDARD AND PROVIDE SAFE PUBLIC ACCESS

ELECTRICAL PLAN – SITE/LOCATION/GENERAL WORK SCOPE

KALAUPAPA NATIONAL HISTORICAL PARK

DRAWING NO. 491/80037
PMIS/PKG NO. 98337
SHEET 14 OF 17

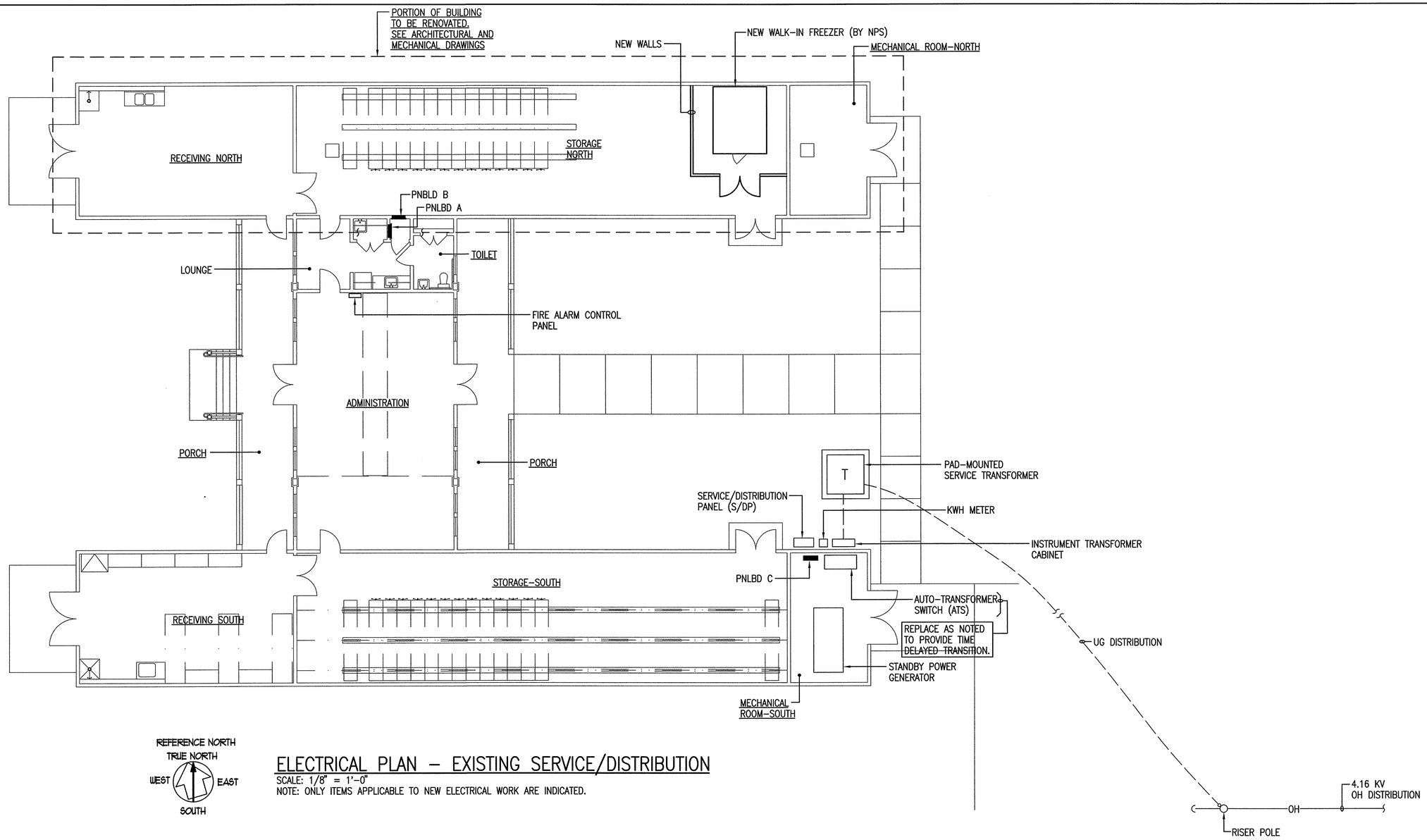

ELECTRICAL PLAN – EXISTING SERVICE/DISTRIBUTION

SCALE: 1/8" = 1'-0"

NOTE: ONLY ITEMS APPLICABLE TO NEW ELECTRICAL WORK ARE INDICATED.

WALLACE T. OKI LICENSED PROFESSIONAL ENGINEER 3539-E HAWAII, U.S.A.

THIS WORK WAS PREPARED BY ME OR UNDER MY SUPERVISION

WALLACE T. OKI, P.E., INC.
ELECTRICAL ENGINEERING
688 KINOOLE ST., STE. 115B
HILO, HI. 96720 PH:961-9666

WTO REF NO. 102009146

DESIGNED:	WTO
DRAWN:	LHN
TECH. REVIEW:	LTK
DATE:	AUG 4, 2010
SUB SHEET NO.	E3

TITLE OF SHEET

COMPLETE CURATORIAL FACILITY TO MEET COLLECTION MANAGEMENT STANDARD AND PROVIDE SAFE PUBLIC ACCESS

ELECTRICAL PLAN – EXISTING SERVICE/DISTRIBUTION

KALAUPAPA NATIONAL HISTORICAL PARK

DRAWING NO. 491/80037

PMIS/PKG NO. 98337

SHEET 15 OF 17

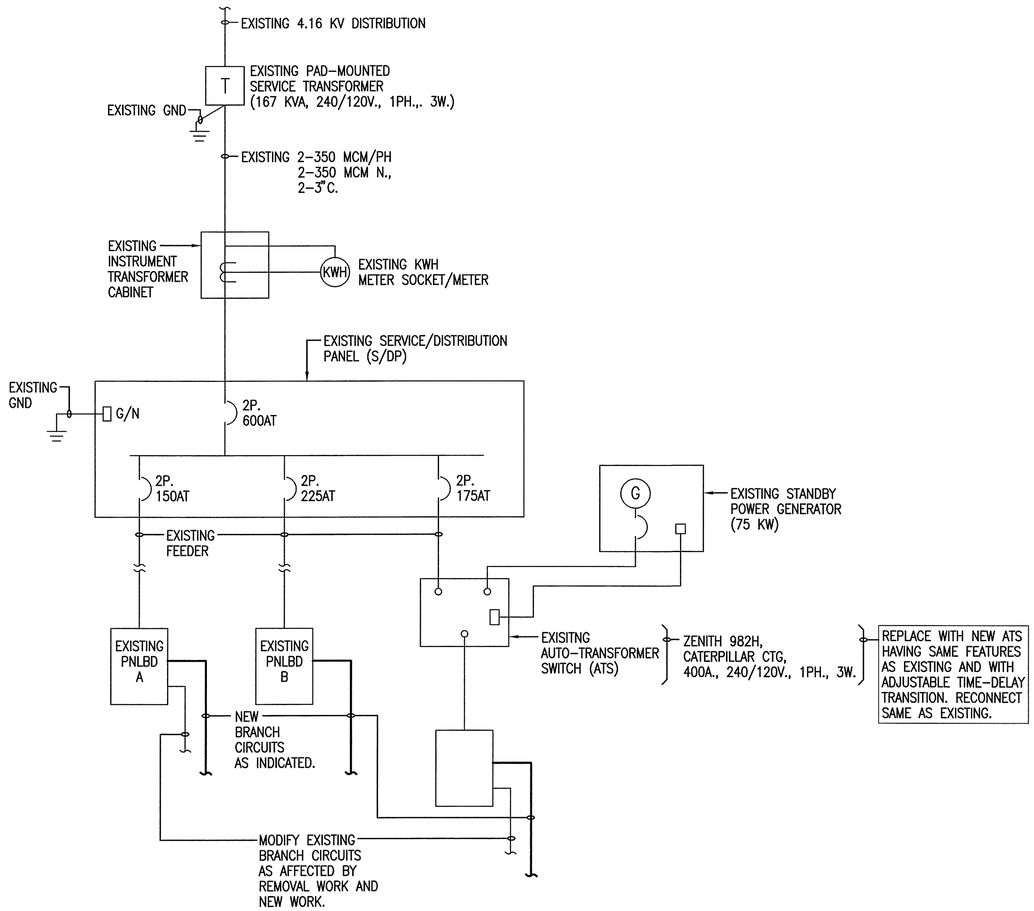

ONE-LINE DIAGRAM – SERVICE/DISTRIBUTION

1,2 EXISTING PNLBD A — 240/120 VOLTS, 1 PHASE, 3 WIRE, 225 AMP MAINS, FLUSH MOUNTED (CUTTLER-HAMMER PRL-1A)

	WIRE SIZE	SERVICE	CIR. BKR. AMP	CIR. BKR. POLE	CIR. NO.	LINE	CIR. NO.	CIR. BKR. POLE	CIR. BKR. AMP	SERVICE	WIRE SIZE	
3		L-RECEIVING NORTH	20	1	1	L1	2	1	20	R-RECEIVING NORTH		3
3		L-STORAGE/MECH NORTH	20	1	3	L2	4	1	20	R-STORAGE/MECH NORTH		3
3		L-STORAGE NORTH	20	1	5	L1	6	1	20	R-RECEIVING SOUTH		3
3		L-RECEIVING NORTH	20	1	7	L2	8	1	20	R-REFRIG SOUTH		3
3		L-STOR/MECH SOUTH	20	1	9	L1	10	1	20	R-STOR SOUTH		3
3		L-STOR SOUTH	20	1	11	L2	12	1	20	R-COMPUTER ROOM		3
3		L-LOUNGE/TOILET	20	1	13	L1	14	1	20	R-ADMINISTRATION		3
3		L-ADMINISTRATION	20	1	15	L2	16	1	20	R-REFRIG NORTH (FUTURE)		3
3		L-ADMINISTRATION	20	1	17	L1	18	1	20	R-LOUNGE		3
3		L-CEILING FANS ADMIN	20	1	19	L2	20	1	20	R-LOUNGE REFRIG		3
3		L-COMPUTER ROOM	20	1	21	L1	22	1	20	R-LOUNGE CTR		3
3		L-NL	20	1	23	L2	24	1	20	R-LOUNGE CTR		3
3		R-RESTROOM	20	1	25	L1	26	1	20	SF1		3
4	#12	~~SPARE~~ R-EXTERIOR	20	1	27	L2	28	1	20	FACP		3
		SPARE	20	1	29	L1	30	1	20	SPARE		
		PFFB			31	L2	32			PFFB		
		PFFB			33	L1	34			PFFB		
		PFFB			35	L2	36			PFFB		
		PFFB			37	L1	38			PFFB		
		PFFB			39	L2	40			PFFB		
		PFFB			41	L1	42			PFFB		

EXISTING PNLBD B — 240/120 VOLTS, 1 PHASE, 3 WIRE, 225 AMP MAINS, FLUSH MOUNTED (CUTTLER-HAMMER PRL-1A)

	WIRE SIZE	SERVICE	CIR. BKR. AMP	CIR. BKR. POLE	CIR. NO.	LINE	CIR. NO.	CIR. BKR. POLE	CIR. BKR. AMP	SERVICE	WIRE SIZE	
		PFFB			1	L1	2			PFFB		
		PFFB			3	L2	4	1	20	(?)		3
3		INSTANT WH/JANITOR	50	2	5	L1	6	2	50	INSTANT WH		3
				–	7	L2	8	–				
3		INSTANT WH/RESTROOMS	50	2	9	L1	10	2	50	INSTANT WH		3
				–	11	L2	12	–		RECEIVING SOUTH		
5	#8	~~PFFB~~ WH-RECEIVING NORTH	50	2	13	L1	14			PFFB		
	#8	~~PFFB~~		–	15	L2	16			PFFB		
		PFFB			17	L1	18			PFFB		
		PFFB			19	L2	20			PFFB		
		PFFB			21	L1	22			PFFB		
		PFFB			23	L2	24			PFFB		
		PFFB			25	L1	26			PFFB		
		PFFB			27	L2	28			PFFB		
		PFFB			29	L1	30			PFFB		
		PFFB			31	L2	32			PFFB		
		PFFB			33	L1	34			PFFB		
		PFFB			35	L2	36			PFFB		
		PFFB			37	L1	38			PFFB		
		PFFB			39	L2	40			PFFB		
		PFFB			41	L1	42			PFFB		

EXISTING PNLBD C — 240/120V., 1PH., 3W., 225A. MAIN, SURFACE MOUNTED. (CUTTLER-HAMMER PRL-1A)

	WIRE SIZE	SERVICE	CIR. BKR. AMP	CIR. BKR. POLE	CIR. NO.	LINE	CIR. NO.	CIR. BKR. POLE	CIR. BKR. AMP	SERVICE	WIRE SIZE	
4	#8	~~SPARE~~ FCU2 REHEAT	40	2	1	L1	2	2	20	FCU1		3
	#8			–	3	L2	4	–				
3		REHEAT COIL(FCU1)	30	2	5	L1	6	1	20	BATTERY CHARGER		3
				–	7	L2	8	2	30	~~BALLY 1 ACCU~~ FREEZER ACCU	#10	7
6		~~BALLY 1 FCU~~ SPARE	20	2	9	L1	10	–			#10	
				–	11	L2	12	~~2~~ 1	~~30~~ 20	~~BALLY 2 ACCU~~ FREEZER	#12	7
6		~~BALLY 2 FCU~~ SPARE	20	2	13	L1	14	~~#~~ 1	20	FREEZER	#12	7
				–	15	L2	16	2	30	~~BALLY 3 ACCU~~ SPARE		6
6		~~BALLY 3 FCU~~ SPARE	20	2	17	L1	18	–				
				–	19	L2	20	1	40	~~BALLY 1 HUMIDIFIER~~ SPARE		6
6		~~BALLY 2 HUMIDIFIER~~ SPARE	40	1	21	L1	22	1	40	~~BALLY 3 HUMIDIFIER~~ SPARE		6
3		R-MECH RM SOUTH	20	1	23	L2	24	2	30	ACCU1		3
3		COMPRESSOR FA	20	1	25	L1	26	–				
		PFFB			27	L2	28	2	50	~~PFFB~~ ACCU2	#8	5
		PFFB			29	L1	30	–		~~PFFB~~	#8	
		PFFB			31	L2	32	2	20	~~PFFB~~ FCU2	#12	5
		PFFB			33	L1	34	–		~~PFFB~~	#12	
		PFFB			35	L2	36	1	20	~~PFFB~~ MOISTURE SENSOR	#12	5
		PFFB			37	L1	38			PFFB		
		PFFB			39	L2	40			PFFB		
		PFFB			41	L1	42			PFFB		

NOTES: EXISTING PNLBD A/PNLBD B/PNLBD C

1 = CONTRACTOR SHALL PROVIDE THE REQUIRED MAN-HOURS TO FIELD IDENTIFY AND VERIFY EACH BRANCH CIRCUIT.
2 = PROVIDE NEW TYPEWRITTEN PNLBD DIRECTORY IN ACCORDANCE WITH FIELD IDENTIFICATION WORK AND NEW WORK.
3 = EXISTING BRANCH CIRCUIT. NO WORK SHOULD BE REQUIRED.
4 = NEW BRANCH CIRCUIT. USE EXISTING SPARE BRANCH CIRCUIT BREAKER.
5 = NEW BRANCH CIRCUIT. PROVIDE NEW BRANCH CIRCUIT BREAKER IN EXISTING PFFB.
6 = REMOVE EXISTING BRANCH CIRCUIT. RE-LABEL DIRECTORY AS "SPARE".
7 = NEW BRANCH CIRCUIT. RE-USE PORTION OF EXISTING WIRING, REPLACE BRANCH CIRCUIT BREAKERS AS INDICATED.

WALLACE T. OKI LICENSED PROFESSIONAL ENGINEER 3539-E HAWAII, U.S.A.

THIS WORK WAS PREPARED BY ME OR UNDER MY SUPERVISION

WALLACE T. OKI, P.E., INC.
ELECTRICAL ENGINEERING
688 KINOOLE ST., STE. 115B
HILO, HI. 96720 PH:961-9666

WTO REF NO. 102009146

DESIGNED: WTO
DRAWN: LHN
TECH. REVIEW: LTK
DATE: AUG 4, 2010

SUB SHEET NO. E4

TITLE OF SHEET
COMPLETE CURATORIAL FACILITY TO MEET COLLECTION MANAGEMENT STANDARD AND PROVIDE SAFE PUBLIC ACCESS

ONE-LINE DIAGRAM/PNLBD SCHEDULES

KALAUPAPA NATIONAL HISTORICAL PARK

DRAWING NO. 491/80037
PMIS/PKG NO. 98337
SHEET 16 OF 17

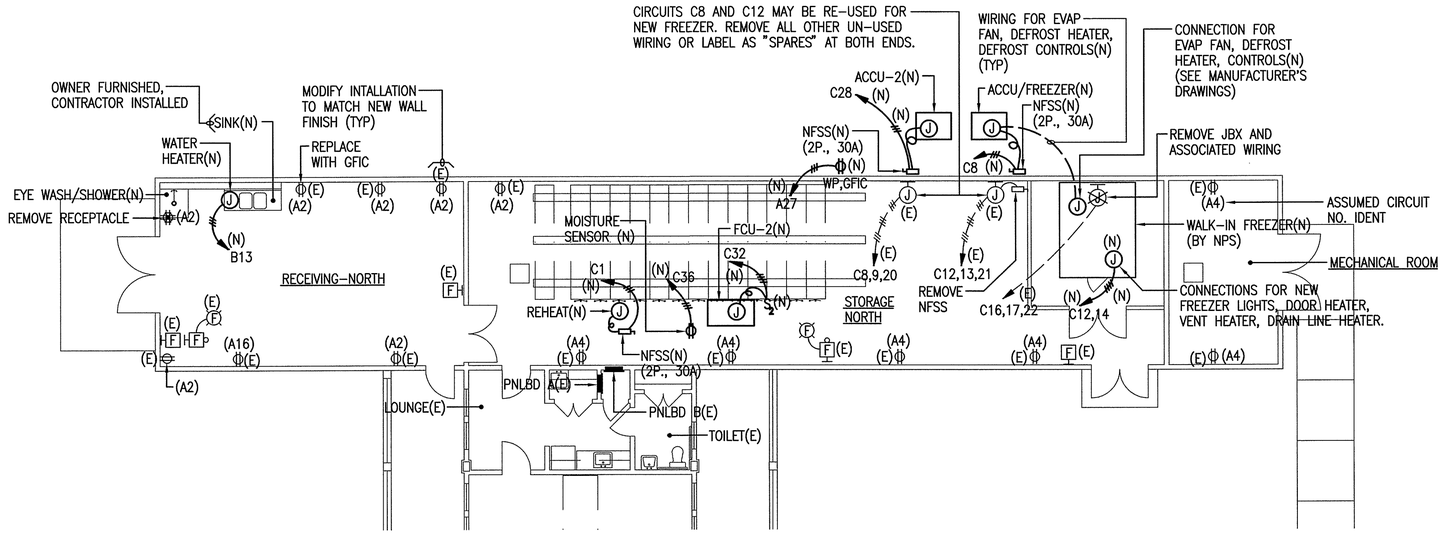

LIGHTING FIXTURE SCHEDULE

SYMBOL/TYPE	MOUNTING	LAMP	DESCRIPTION
Ⓐ	WALL SURFACE	150W. HIGH PRESSURE SODIUM	EXISTING NIGHT LIGHT
Ⓑ	WALL SURFACE	SELF-ILLUMINATED	EXISTING SELF-ILLUMINATED "EXIT" SIGN
Ⓒ	CEILING SURFACE	2-F32T8	EXISTING 8"X48" ENCLOSED FLUORESCENT
Ⓓ	CEILING SURFACE	4-F32T8	EXISTING 24"X48" ENCLOSED FLUORESCENT
①	CEILING SURFACE	2-F32T8 4100K	NEW 8"X48" ENCLOSED FLUORESCENT SIMILAR TO OR MATCH TYPE C

ELECTRICAL PLAN – NEW WORK – GENERAL POWER/RECEPTACLE

SCALE: 1/8" = 1'-0
NOTES: 1. ONLY ITEMS APPLICABLE TO ELECTRICAL WORK ARE INDICATED.
2. ALL ITEMS NEW EXCEPT AS INDICATED.
3. (E) = EXISTING ITEM
4. (N) = NEW WORK

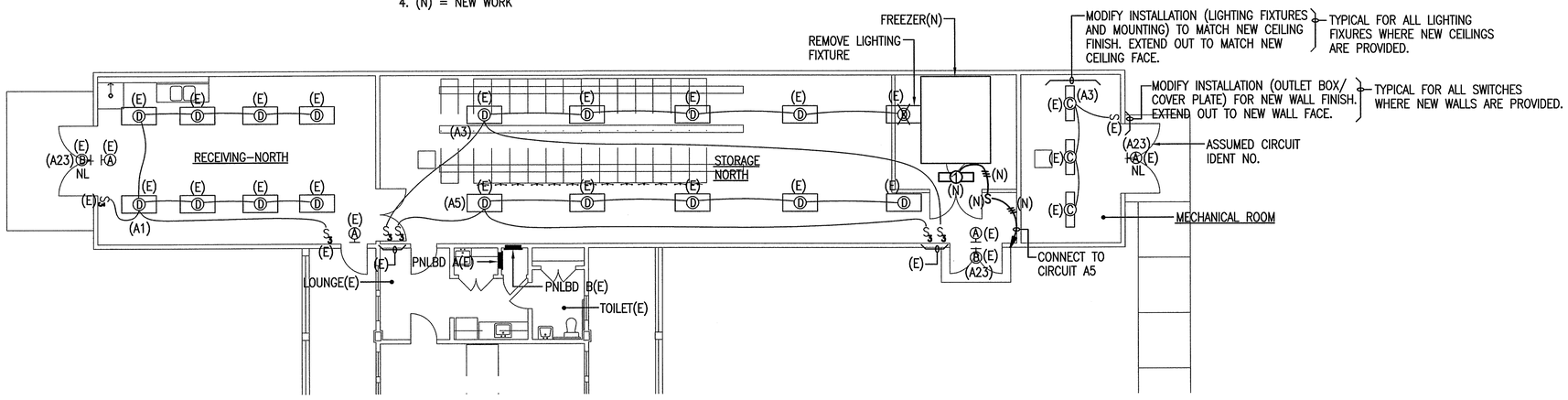

ELECTRICAL PLAN – NEW WORK – LIGHTING

SCALE: 1/8" = 1'-0
NOTES: 1. ONLY ITEMS APPLICABLE TO ELECTRICAL WORK ARE INDICATED.
2. ALL ITEMS NEW EXCEPT AS INDICATED.
3. (E) = EXISTING ITEM
4. (N) = NEW WORK

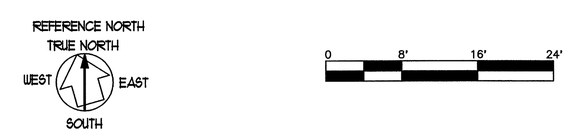

WALLACE T. OKI LICENSED PROFESSIONAL ENGINEER 3539-E HAWAII, U.S.A.

THIS WORK WAS PREPARED BY ME OR UNDER MY SUPERVISION

WALLACE T. OKI, P.E., INC.
ELECTRICAL ENGINEERING
688 KINOOLE ST., STE. 115B
HILO, HI. 96720 PH:961-9666

WTO REF NO. 102009146

DESIGNED: WTO
DRAWN: LHN
TECH. REVIEW: LTK
DATE: AUG 4, 2010

SUB SHEET NO. E5

TITLE OF SHEET
COMPLETE CURATORIAL FACILITY TO MEET COLLECTION MANAGEMENT STANDARD AND PROVIDE SAFE PUBLIC ACCESS

ELECTRICAL PLAN – NEW WORK

KALAUPAPA NATIONAL HISTORICAL PARK

DRAWING NO. 491/80037
PMIS/PKG NO. 98337
SHEET 17 OF 17