UNITED STATES DEPARTMENT OF THE INTERIOR

BUREAU OF LAND MANAGEMENT

PARK CENTER WELL 2014

Royal Gorge Field Office

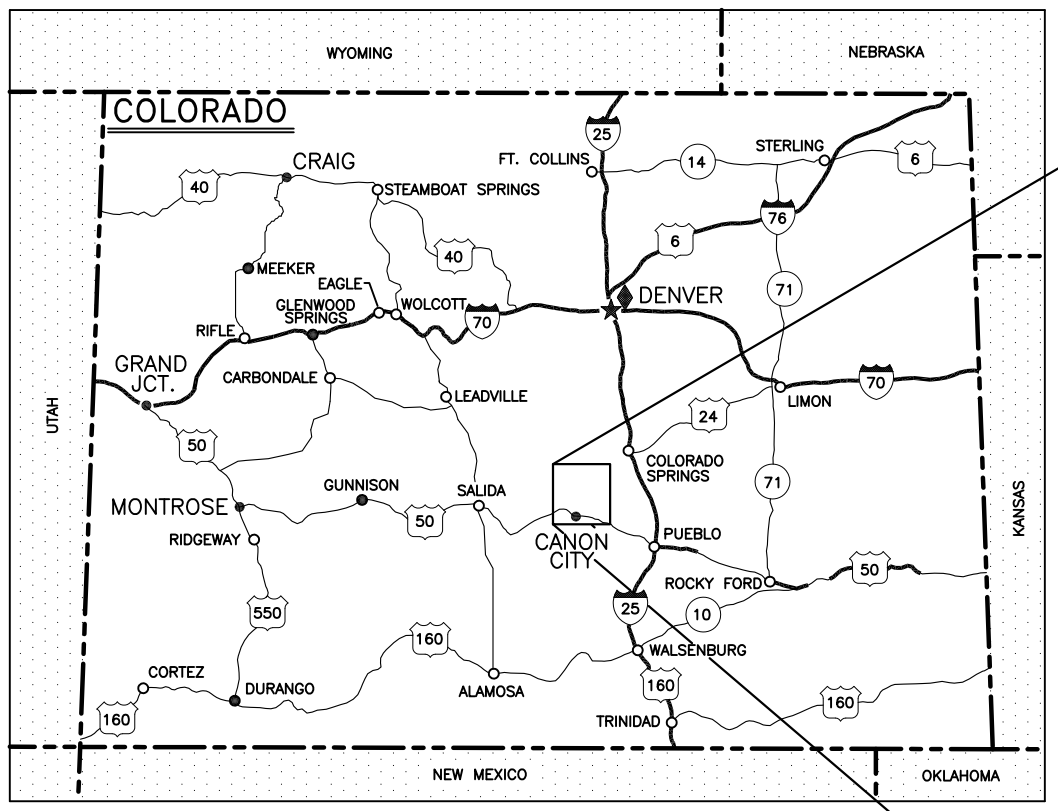

AREA REFERENCE MAP

SYMBOL	DESCRIPTION	SYMBOL	DESCRIPTION
25	INTERSTATE HIGHWAY	★	STATE CAPITOL
50	U.S. HIGHWAY	♦	BLM STATE OFFICE
71	STATE HIGHWAY	•	BLM FIELD OFFICE

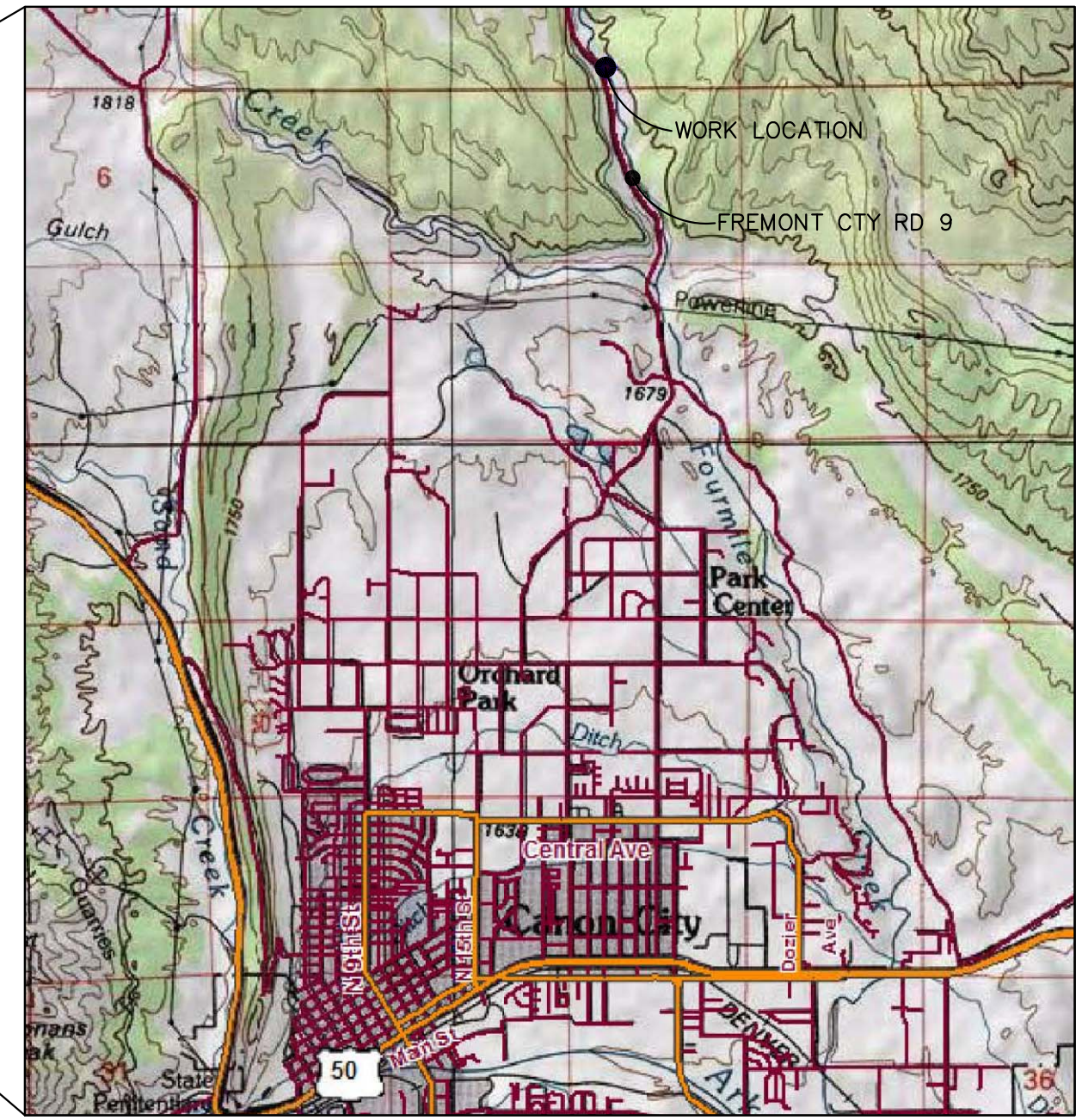

AREA MAP

0.0 0.5 1.0 1.5 miles

0.0 0.5 1.0 1.5 2.0 2.5 km

SHEET INDEX

1. TITLE SHEET	7. MAIN PARKING DETAILS
2. SITE PLAN	8. WELL LOCATION AREA DETAILS
3. REPLACEMENT WELL DIAGRAM	9. PARKING–PROFILES & SECTIONS
4. CONCRETE–SECTIONS AND DETAILS	10. TRAIL & RETAINING WALL SECTIONS
5. PLUMBING DETAILS	11. CHAIN LINK FENCE DETAILS, TYPICAL
6. EXISTING WELL DIAGRAM	12. DETAILS

ALWAYS THINK SAFETY

U.S. DEPARTMENT OF THE INTERIOR
BUREAU OF LAND MANAGEMENT

CO

UNITED STATES DEPARTMENT OF THE INTERIOR
BUREAU OF LAND MANAGEMENT

Title Sheet

Park Center Well 2014

Front Range District

MARK	DESCRIPTION	DATE	APPROVED

PROJECT NO: LDDMP0580000

DESIGN OFFICE: LLCO952000

DESIGNED BY:

DRAWN BY: BCV

CHK'D BY:

APPROVED BY:

DATE: 07/2014

SHEET 1 OF 12

89/250

Park Center Well

L15PC00000 / L14PS01277

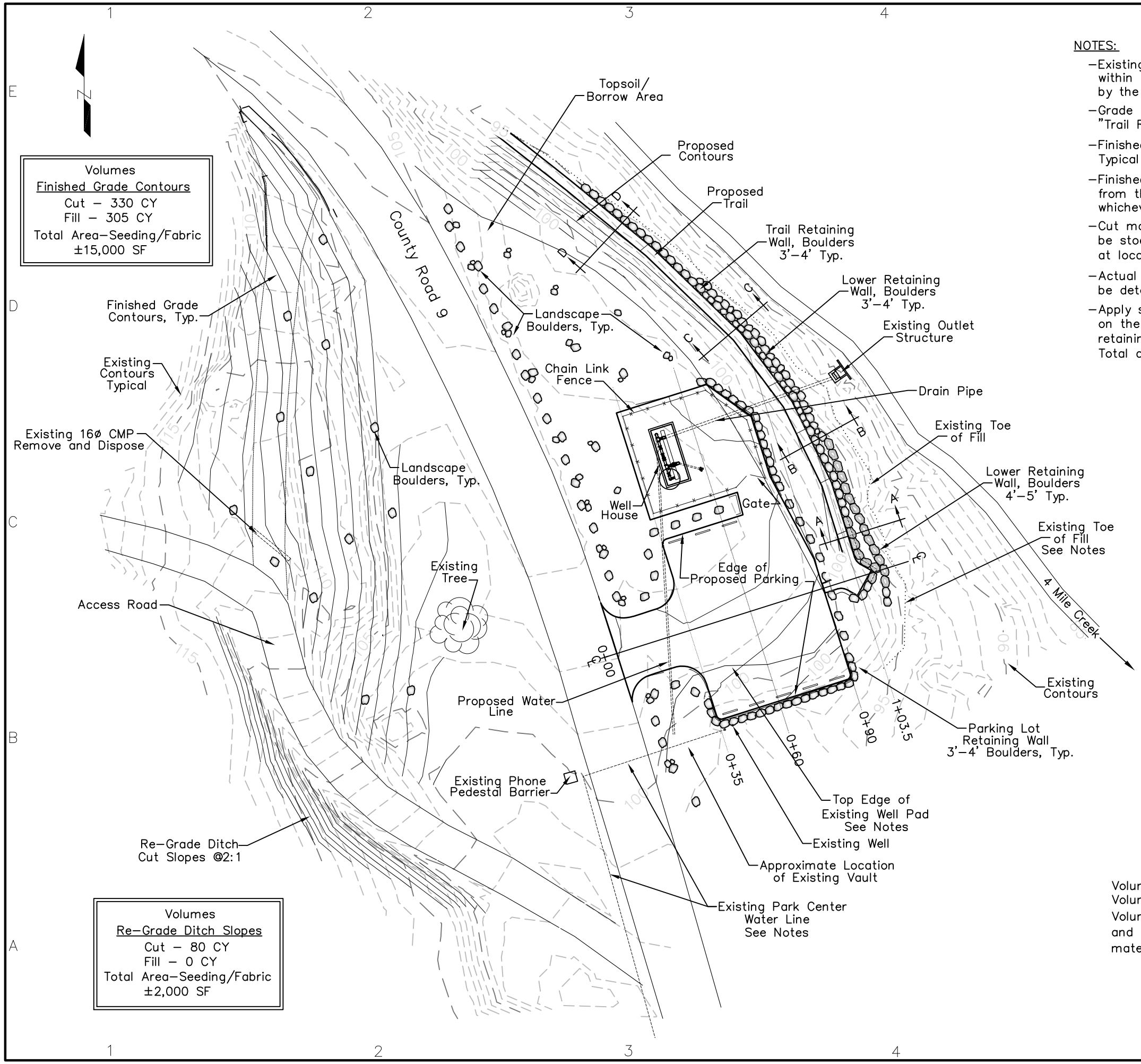

NOTES:

- Existing boulders located onsite (not shown) shall be used within the retaining wall or as landscape boulders as directed by the Contacting Officer. Estimated 25 Boulders onsite.
- Grade ±level between the "Lower Retaining Wall" and the "Trail Retaining Wall" when applicable.
- Finished grade of the top of the"Lower Retaining Wall, 4'–5' Typical Boulder" size is ±96.5' the entire length of wall.
- Finished grade of all other Retaining Walls shall be determined from the finished grade of the adjacent trail or parking area, whichever is applicable.
- Cut material collected from re–grading the ditch slopes shall be stockpiled at a location on site and re–used for seed bed at locations as directed by the Contracting Officer.
- Actual locations for the existing Park Center Water line is to be determined by the Contractor.
- Apply seed and install erosion blankets on all re–hab areas on the West side of County Rd. 9, all disturbed areas near retaining walls, and at the borrow area if applicable. Total area for seed/blankets is estimated at 30,000 SF.

Volume of earthwork material is calculated by the "Grading Volume Tool", AutoCAD Civil 3D 2014.

Volume of material is measured between existing ground and design surfaces. No compensation for shrink or swell material has been considered in the volume totals.

Scale in Feet
0 30 60 90

U.S. DEPARTMENT OF THE INTERIOR
BUREAU OF LAND MANAGEMENT

UNITED STATES DEPARTMENT OF THE INTERIOR
BUREAU OF LAND MANAGEMENT

Site Plan

Park Center Well 2014

Front Range District

MARK	DESCRIPTION	DATE	APPROVED

PROJECT NO: LDDMP0580000
DESIGN OFFICE: LLCO952000
DESIGNED BY: others
DRAWN BY: BCV
CHK'D BY:
APPROVED BY:
DATE: 07/2014

SHEET 2 OF 12

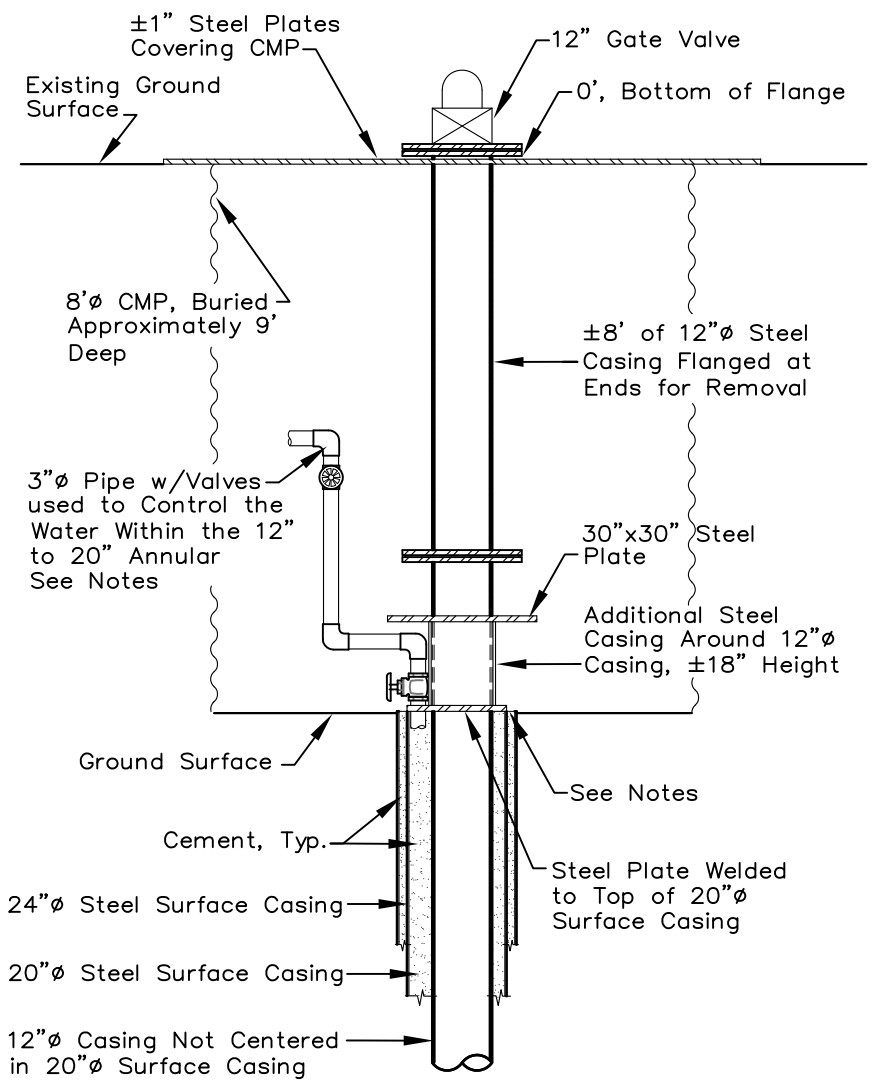

Replacement Wellhead Detail

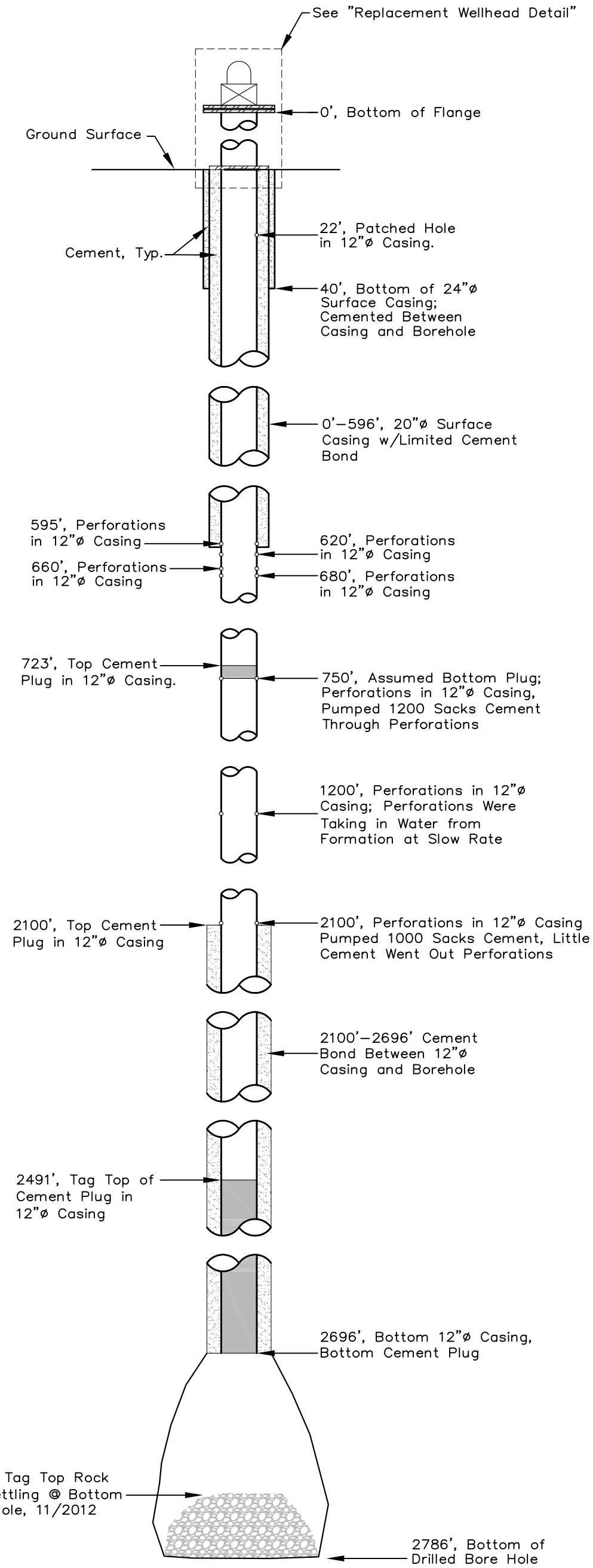

Replacement Well Diagram

Notes:
1. Drawings are not to scale.
2. These drawings illustrate what is known about the well and the most recent configuration of the wellhead.
3. See solicitation attachments, including cement bond logs and other reports for additional information on the replacement well.
4. 3" pipe as shown in the "Replacement Wellhead Detail" drains into the concrete baffled structure as shown on the drawings.
5. Extend casing(s) to the required elevations as shown on the drawings and according to 2 CCR 402–2.

PROJECT NO: LDDMP0580000					UNITED STATES DEPARTMENT OF THE INTERIOR BUREAU OF LAND MANAGEMENT
DESIGN OFFICE: LLCO9520000					
DESIGNED BY: others					Replacement Well Diagram
DRAWN BY: BCV					
CHK'D BY:					Park Center Well 2014
APPROVED BY:					
DATE: 07/2014	MARK	DESCRIPTION	DATE	APPROVED	Front Rage District CO

SHEET 3 OF 12

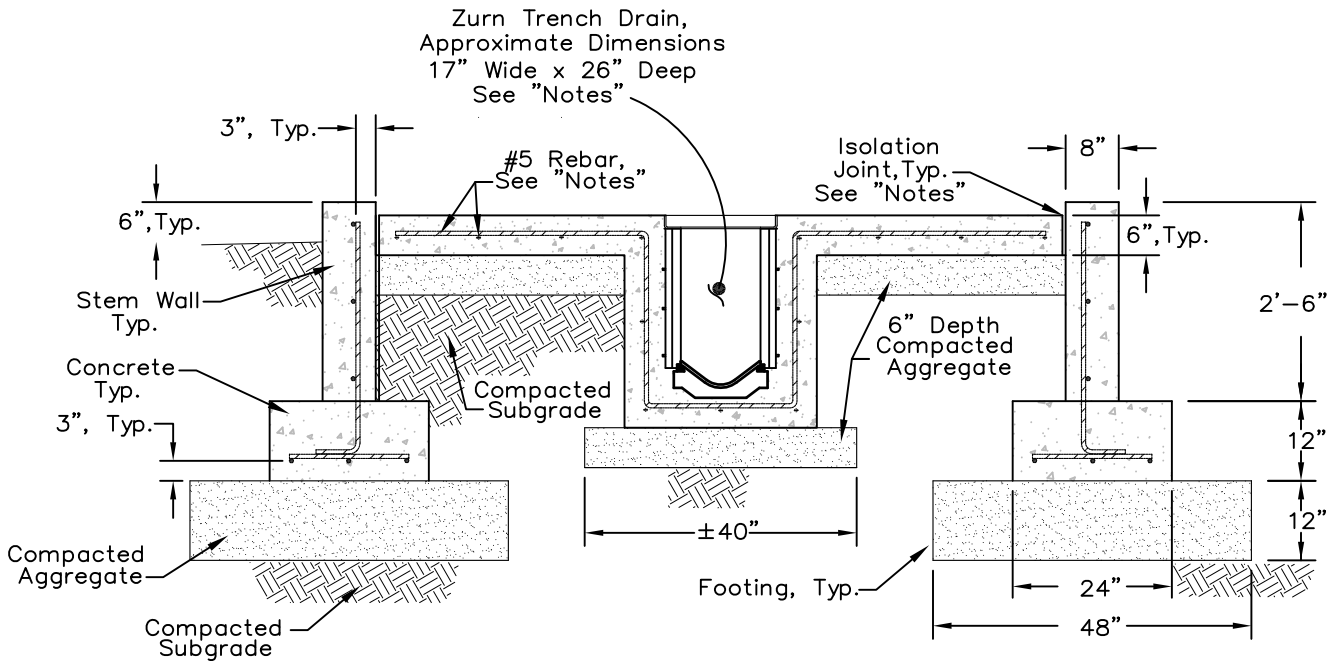

Section "A-A"

Notes:

- Rebar shall be #5.
  Rebar shall have a 3" clearance at all edges and structures.
  Rebar in floor slab/trench drain shall be centered as shown.
  Rebar in footings shall be as shown.
- Zurn trench drain dimensions vary with each section depending on slope within drain. See manufacturers information for exact dimensions.
- Isolation joints shall be constructed between stemwalls and floor slab, and between all ductile pipes penetrating the slab. Seal all isolation and control joints with joint sealant as specified.

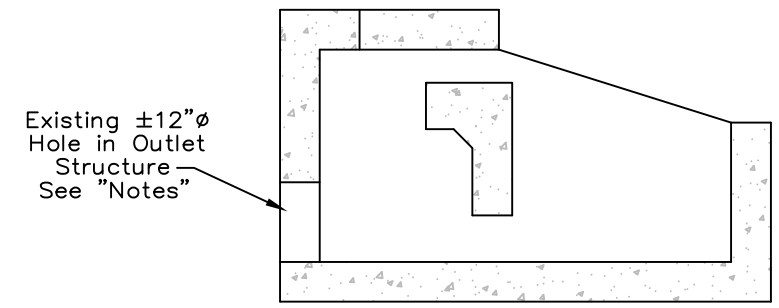

Section "C-C

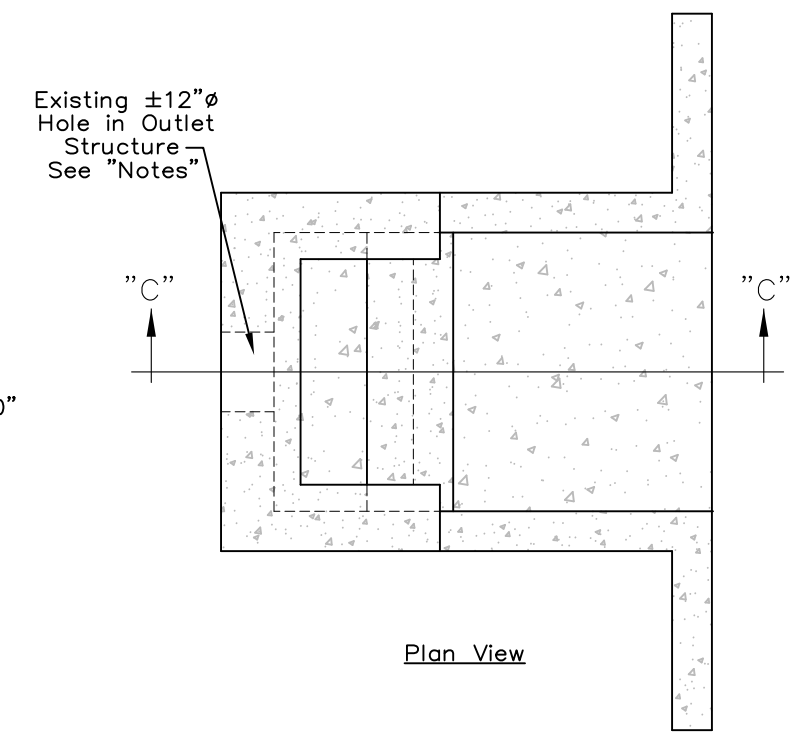

Plan View

Existing Baffled Outlet Structure

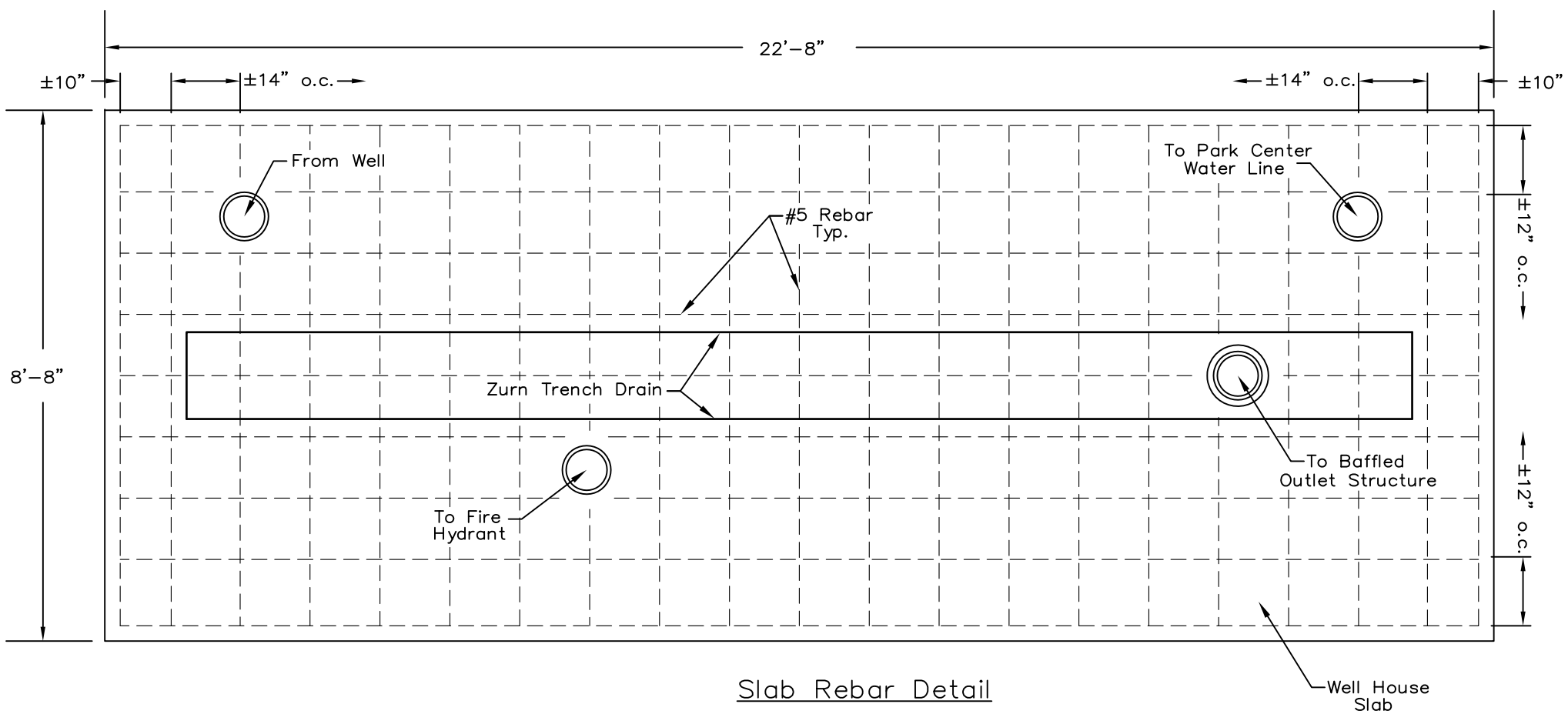

Slab Rebar Detail

Notes:

- Existing outlet structure is concrete with approximately 6" thick sidewall and floor. Wall with existing ±12"ø opening is 8" thick.
  It is anticipated that the existing ±12"ø opening shall have to be enlarged to accept drain pipe and for the installation of "Flap Gate" on end of pipe.
  Once pipe and fittings are in place, fill voids full wall thickness between pipe and structure with concrete.

U.S. DEPARTMENT OF THE INTERIOR
BUREAU OF LAND MANAGEMENT

UNITED STATES DEPARTMENT OF THE INTERIOR
BUREAU OF LAND MANAGEMENT

Concrete-Sections & Details

Park Center Well 2014

Front Range District

CO

MARK	DESCRIPTION	DATE	APPROVED

PROJECT NO: LDDMP0580000
DESIGN OFFICE: LLCO9520000
DESIGNED BY: BCV
DRAWN BY: BCV
CHK'D BY:
APPROVED BY:
DATE: 07/2014

SHEET 4 OF 12

Park Center Well
L15PC00009 / L14PS01277
92/250

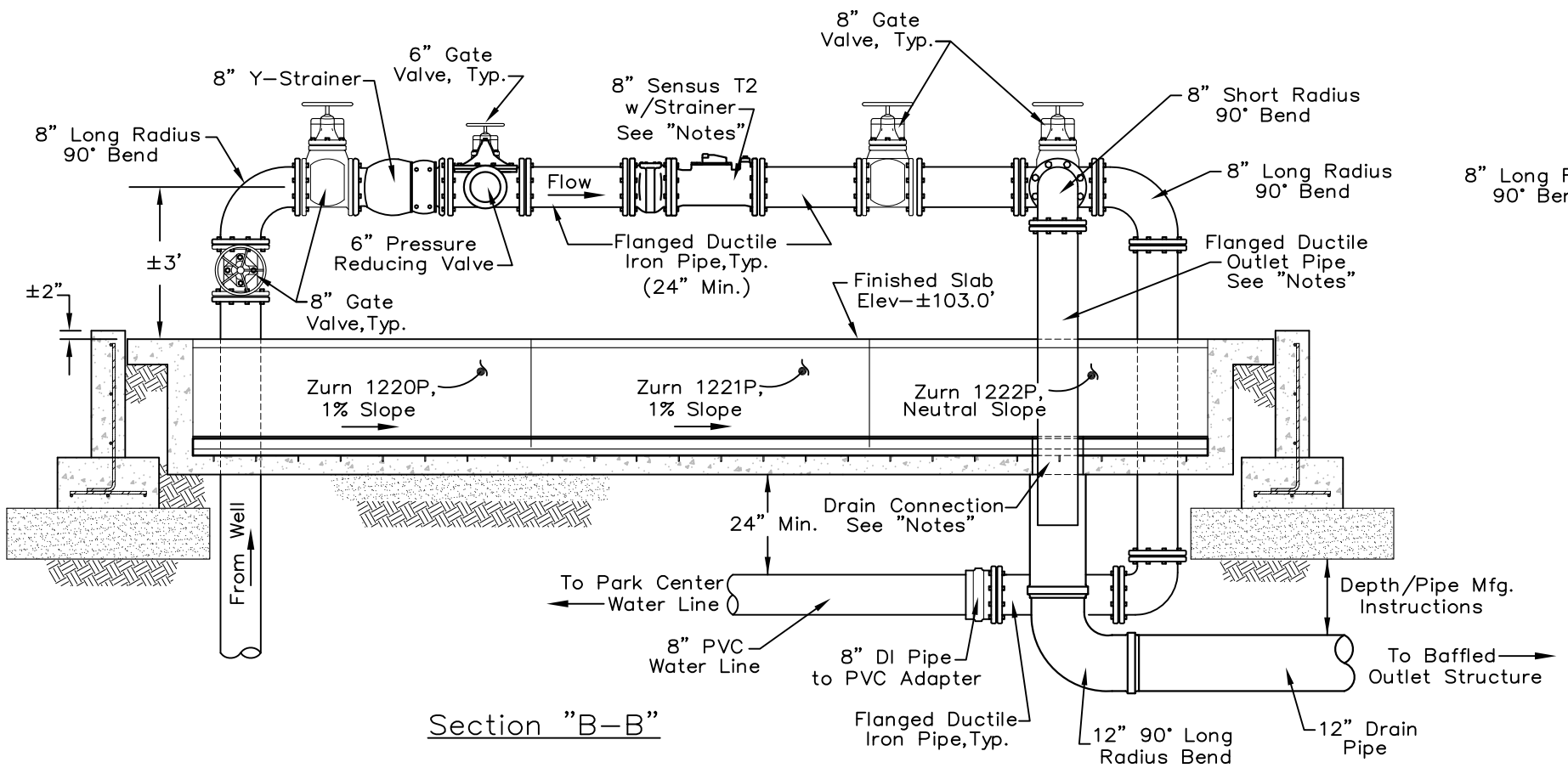

Section "B-B"

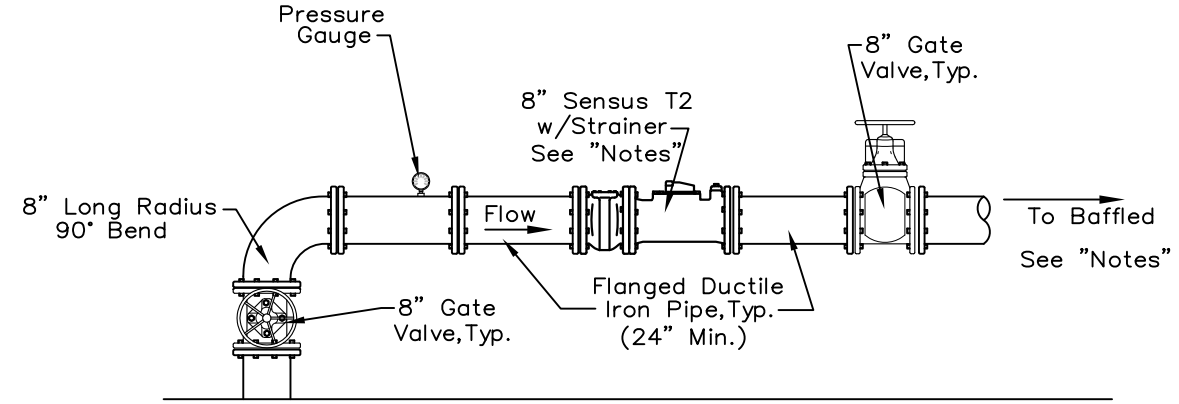

Temporary Well Head Detail

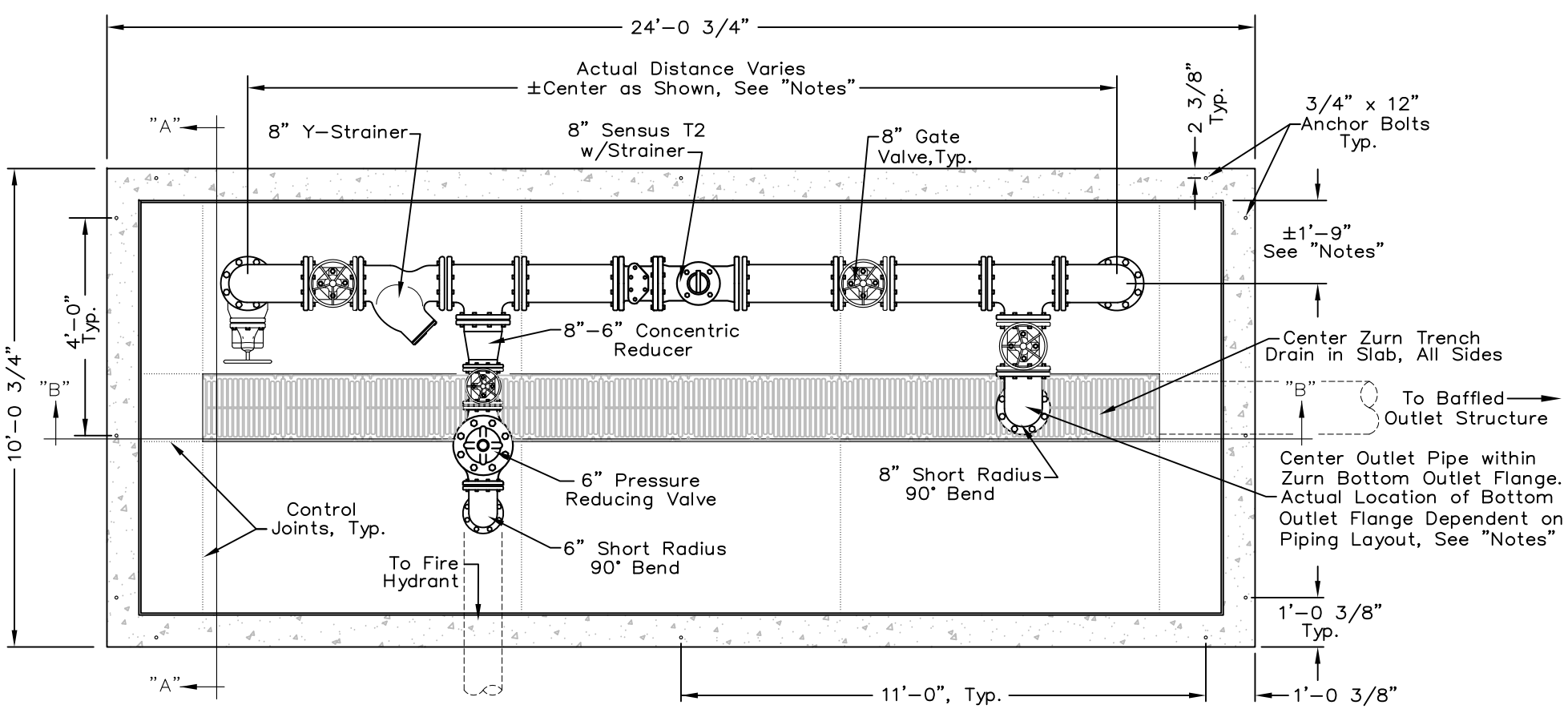

Well Plumbing-Plan View

Notes:

- Drain connection for Zurn bottom outlet shall be more or less centered within the Zurn 1222 section of the drain. Install flange and connect to PVC pipe as instructed by manufacturer.
- Actual lengths of ductile fittings, valves, and meters may vary slightly between manufacturers. Center ductile pipe w/fitting, valves, and meters approximately evenly within concrete slab.
- Actual distance for piping layout from back of slab may vary. Distance to be determined by centering outlet pipe into Zurn drain outlet.
- Extend outlet drain pipe into PVC pipe a minimum of 20" below Zurn section 1222.
- Temporary wellhead shall be constructed and used during well development and testing.
- Submit process for constructing temporary waterline to existing baffled outlet structure for handling the flow of water during well development process. Remove temporary wellhead and pipeline following completion of development and testing.
- Supply two separate "Sensus Omni T2" flow meters, One to be used in the temporary waterline and one for the permanent waterline. The flow meter used in the temporary waterline shall remain the property of the Government.
- Construct well house foundation to the dimensions as shown. Pre-fabricated well house building to be install by others after completion of Contract. Anchor bolts shall be installed at the exact locations as shown to match hole locations in frame of pre-fabricated well house building.

U.S. DEPARTMENT OF THE INTERIOR BUREAU OF LAND MANAGEMENT

UNITED STATES DEPARTMENT OF THE INTERIOR BUREAU OF LAND MANAGEMENT

Plumbing Details

Park Center Well 2014

Front Range District

MARK	DESCRIPTION	DATE	APPROVED

PROJECT NO: LDDMP0580000
DESIGN OFFICE: LLCO9520000
DESIGNED BY: BCV
DRAWN BY: BCV
CHK'D BY:
APPROVED BY:
DATE: 07/2014

SHEET 5 OF 12

Park Center Well 93/250
L15PC00000 / L14PS01277

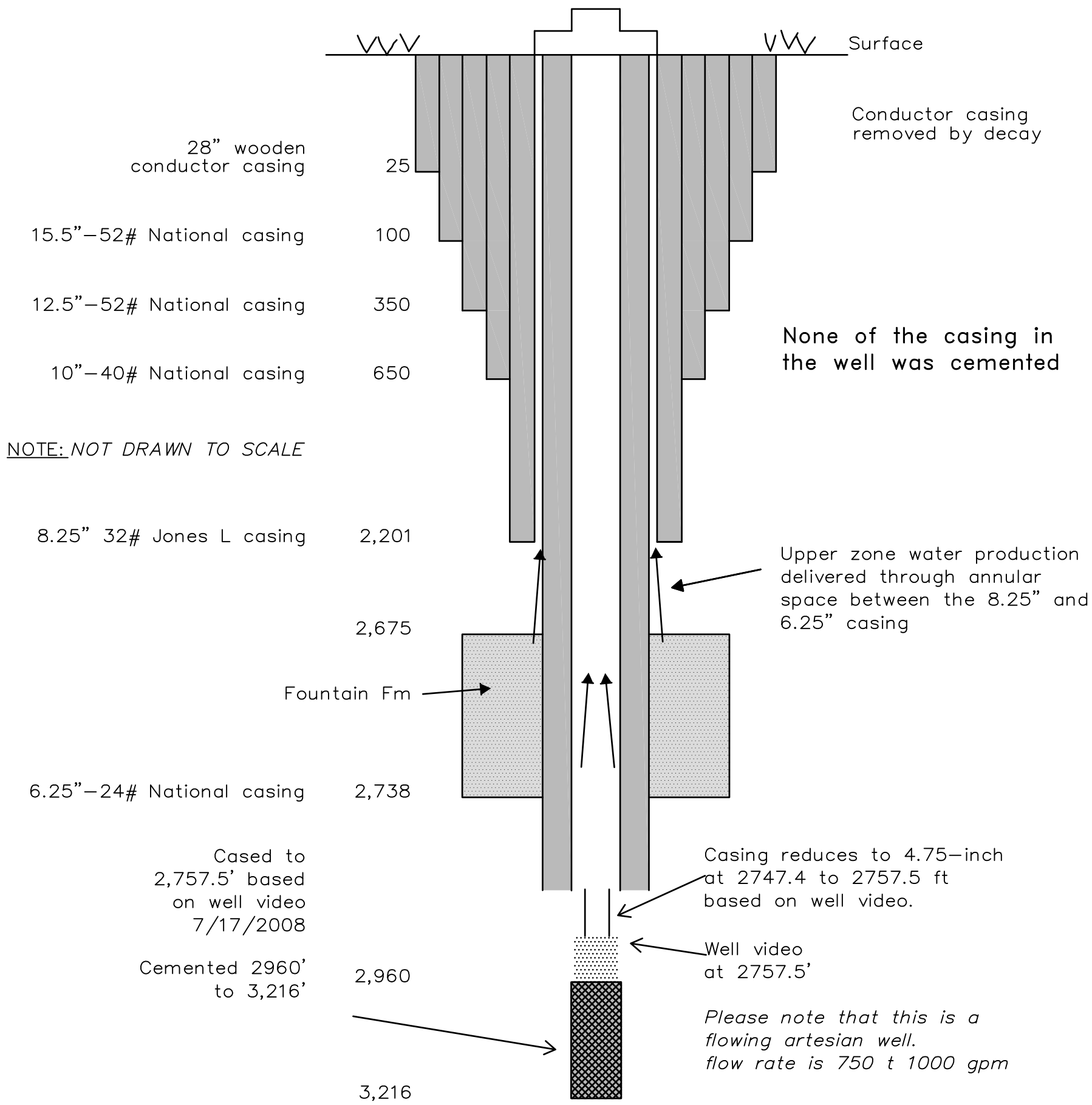

PROJECT NO: LDDMP0580000					UNITED STATES DEPARTMENT OF THE INTERIOR BUREAU OF LAND MANAGEMENT
DESIGN OFFICE: LLCO9520000					Existing Well Diagram
DESIGNED BY: others					Park Center Well 2014
DRAWN BY: BCV					
CHK'D BY:					
APPROVED BY:					
DATE: 07/2014	MARK	DESCRIPTION	DATE	APPROVED	Front Range District CO

SHEET 6 OF 11

6

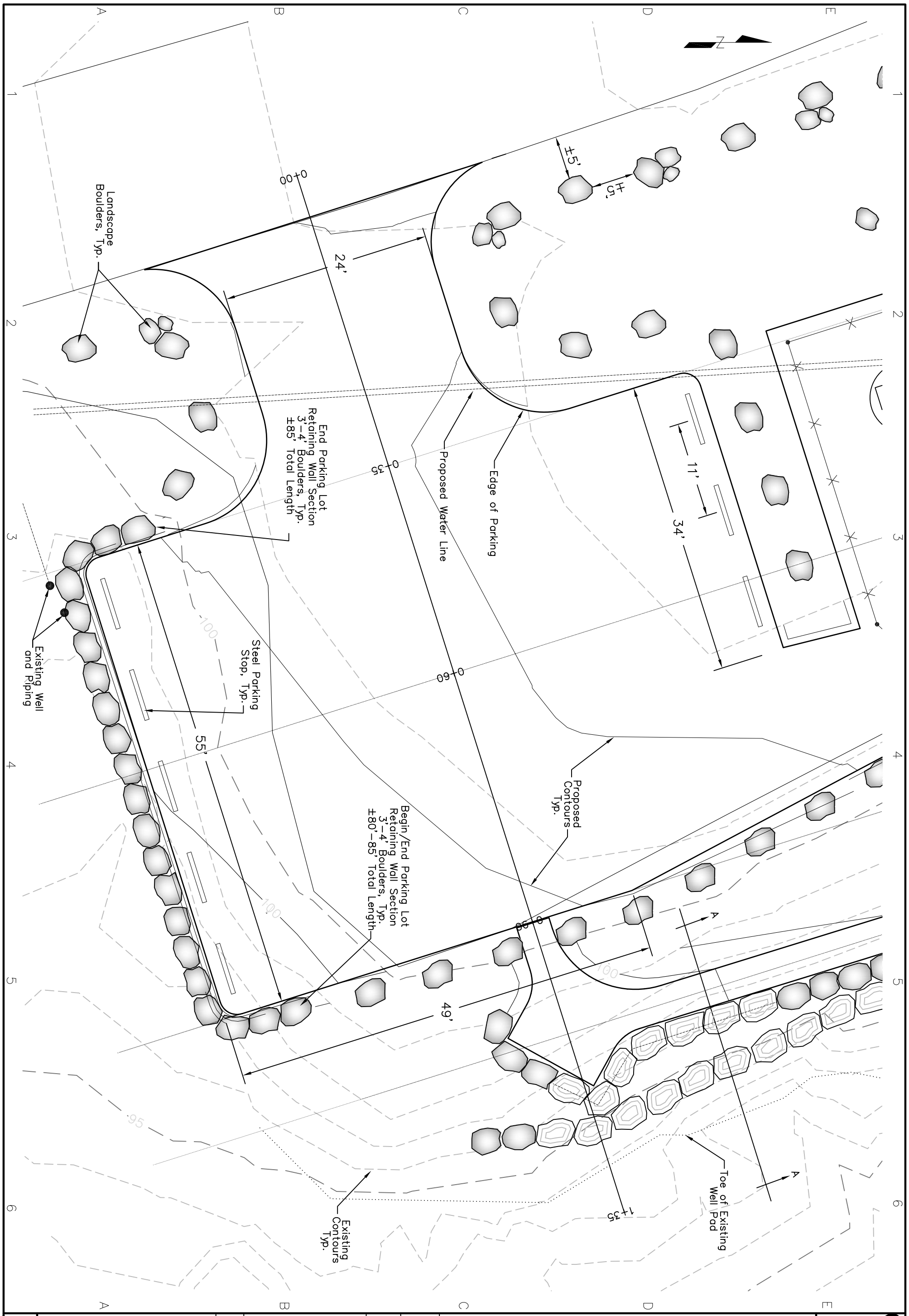

PROJECT NO: LDDMP0580000					UNITED STATES DEPARTMENT OF THE INTERIOR BUREAU OF LAND MANAGEMENT
DESIGN OFFICE: LLCO952000					Main Parking Details
DESIGNED BY: BCV					Park Center Well 2014
DRAWN BY: BCV					
CHK'D BY:					
APPROVED BY:					
DATE: 07/2014	MARK	DESCRIPTION	DATE	APPROVED	Front Range District CO

SHEET 7 OF 12

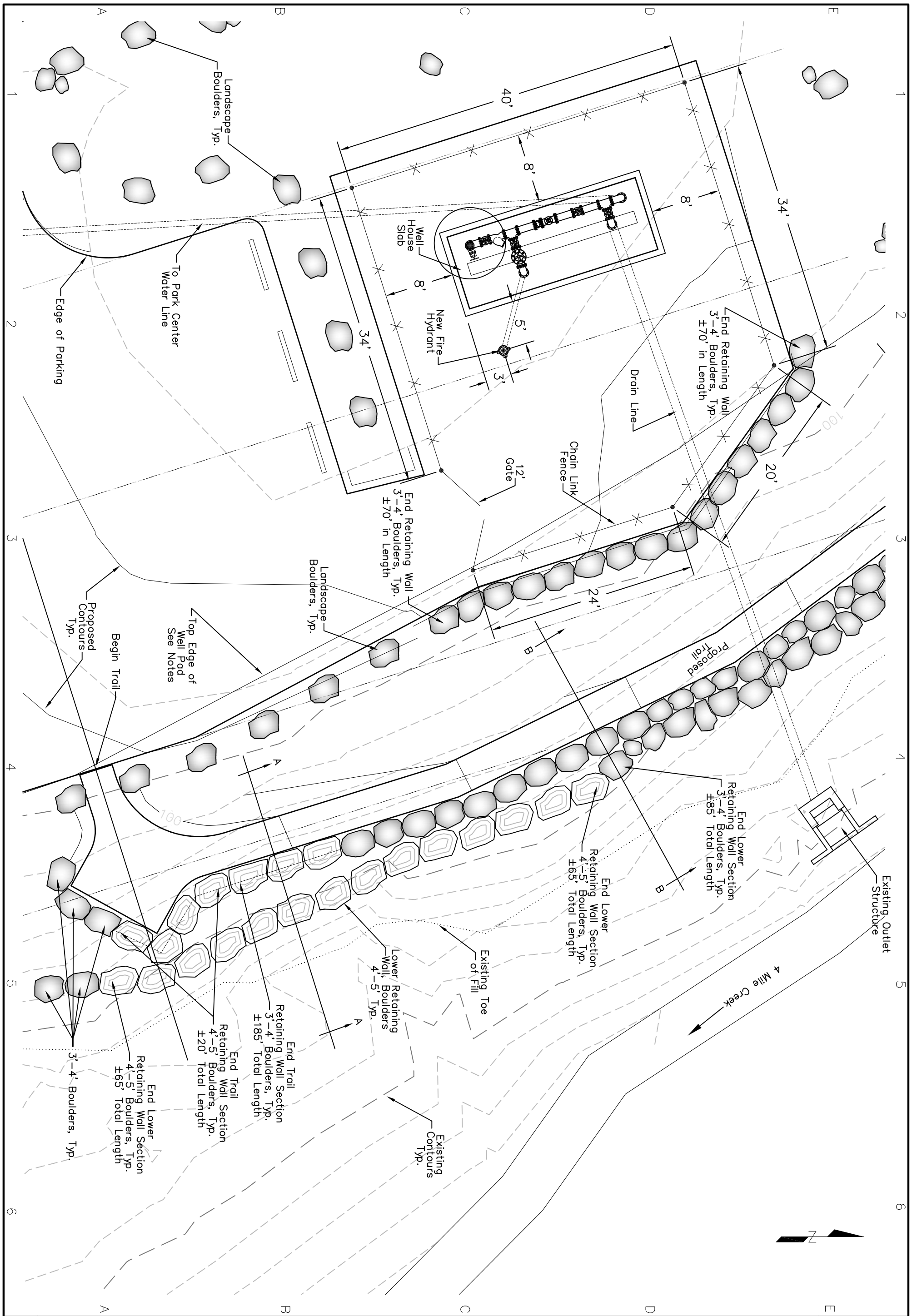

PROJECT NO: LDDMP0580000					UNITED STATES DEPARTMENT OF THE INTERIOR BUREAU OF LAND MANAGEMENT
DESIGN OFFICE: LLCO952000					
DESIGNED BY: BCV					Well Location Area Details
DRAWN BY: BCV					Park Center Well 2014
CHK'D BY:					
APPROVED BY:					
DATE: 07/2014	MARK	DESCRIPTION	DATE	APPROVED	Front Range District CO

SHEET 8 OF 12

8

97/250
Park Center Well
L15PC00089 / L14PS01277

Volumes – Parking and Well House Parking

Cut – 35 CY Total
Fill – 40 CY, Total to Sub–Grade,
Aggregate Surfacing – 130 CY (220 Tons)

Volume of earthwork material is calculated by the "Grading Volume Tool", AutoCAD Civil 3D 2014.
Volume of material is measured between existing ground and design surfaces. No compensation for shrink or swell material has been considered in the volume totals.

NOTES:

- The north end of the existing well pad may be used as a borrow area as directed by the Contracting Officer. Area of borrow shall be between County Road 9 and the proposed trail. Material may be used as fill material in the parking areas and trail as approved by the Contracting Officer.
- Design surface is to Finished Grade, top of crushed aggregate surfacing. Depth of aggregate in parking area is ±6".

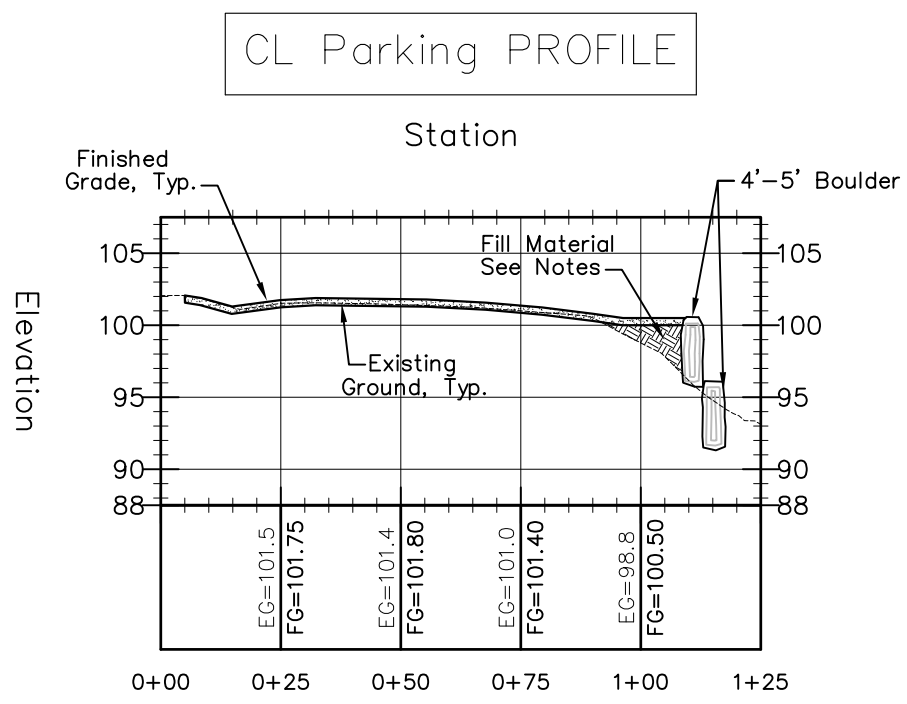

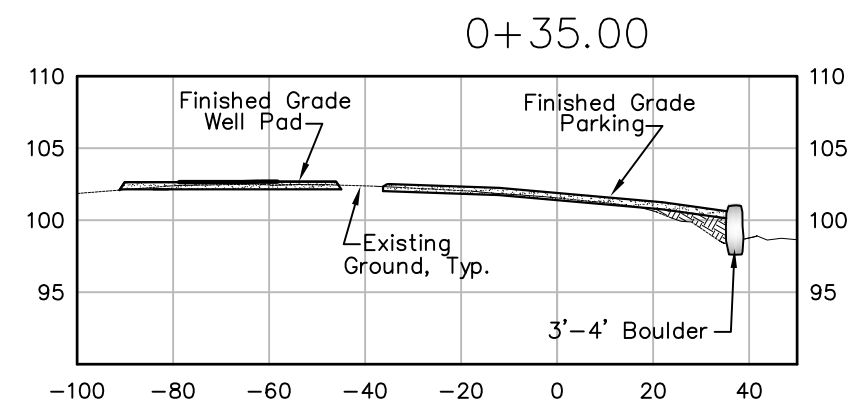

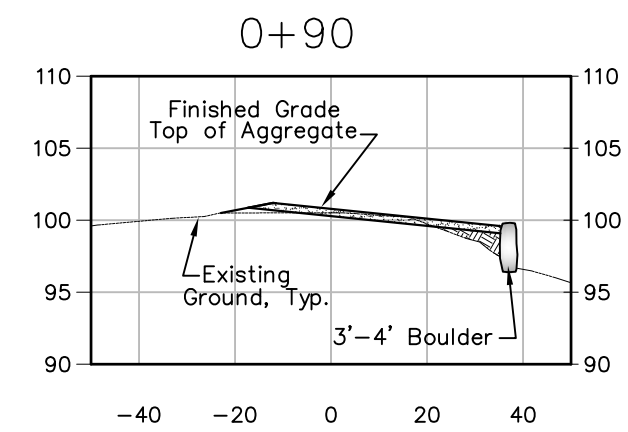

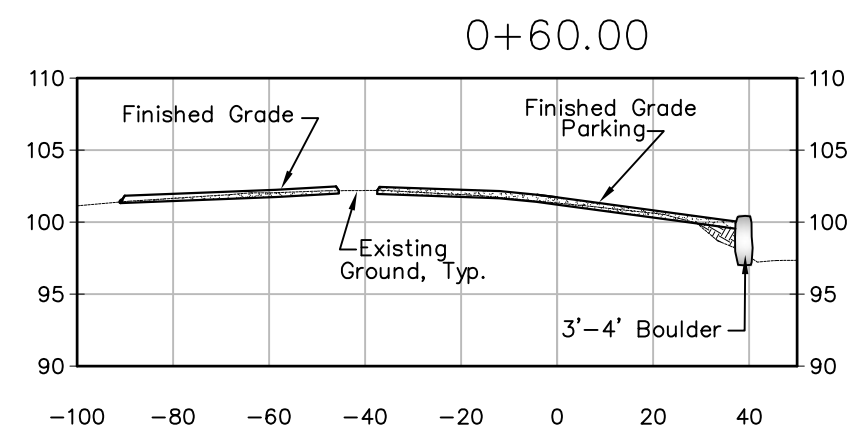

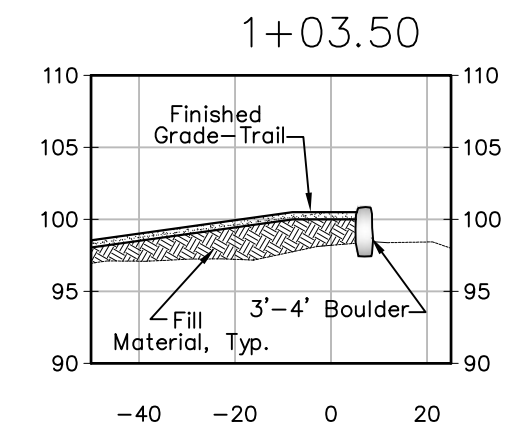

Main Parking – Cross Section

U.S. DEPARTMENT OF THE INTERIOR
BUREAU OF LAND MANAGEMENT

UNITED STATES DEPARTMENT OF THE INTERIOR
BUREAU OF LAND MANAGEMENT

Parking–Profile & Sections

Park Center Well 2014

Front Range District

MARK	DESCRIPTION	DATE	APPROVED

PROJECT NO: LDDMP0580000
DESIGN OFFICE: LLCO952000
DESIGNED BY: BCV
DRAWN BY: BCV
CHK'D BY:
APPROVED BY:
DATE: 07/2014

SHEET 9 OF 12

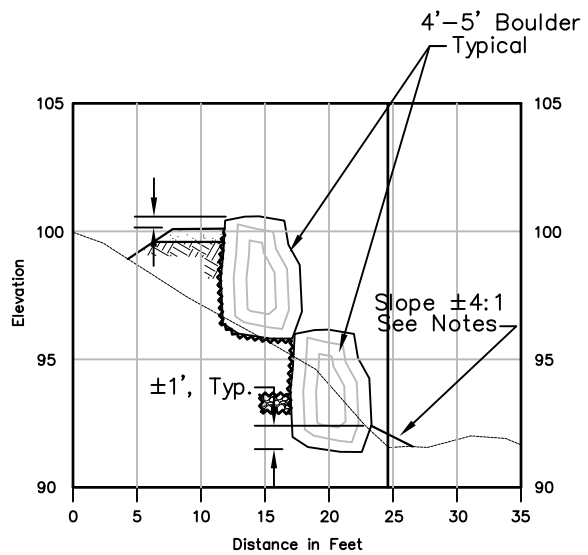

Trail Section "A–A"

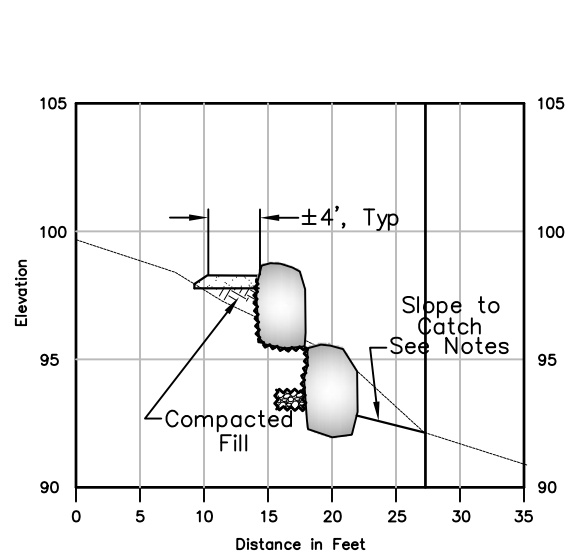

Trail Section "B–B"

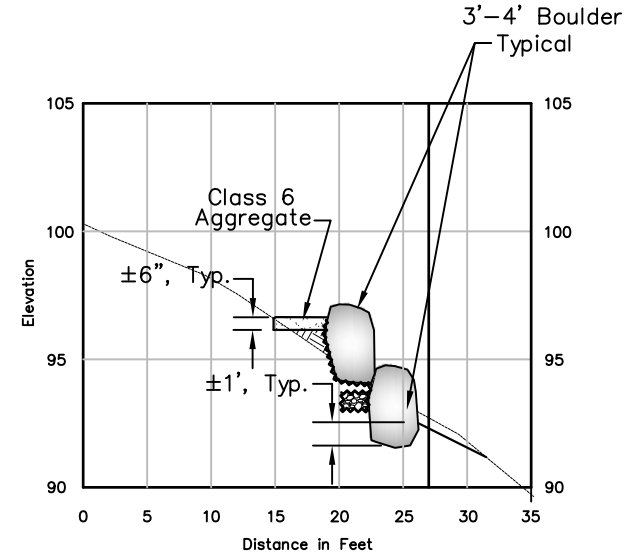

Trail Section "C–C"

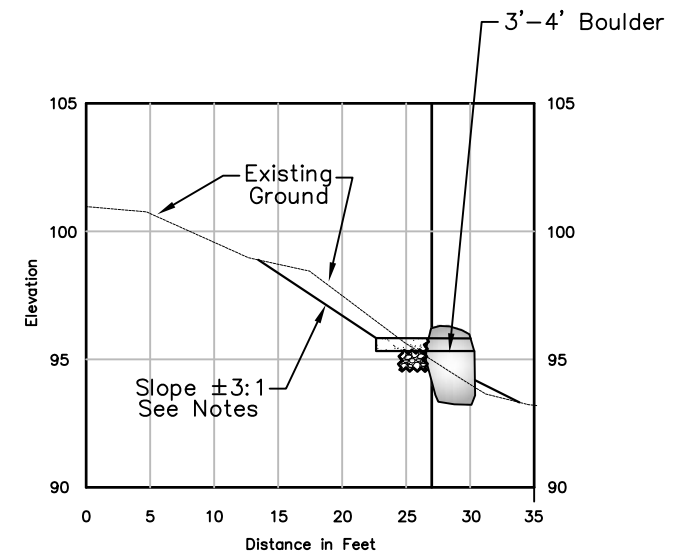

Trail Section "D–D"

Volumes – Parking and Well House Parking

Cut – 95 CY Total

Fill – 35 CY, Total to Sub–Grade,

Aggregate Surfacing – 20 CY (35 Tons)

Volume of earthwork material is calculated by the "Grading Volume Tool", AutoCAD Civil 3D 2014.

Volume of material is measured between existing ground and design surfaces. No compensation for shrink or swell material has been considered in the volume totals.

Notes:

- The north end of the existing well pad may be used as a borrow area as directed by the Contracting Officer. Area of borrow shall be between County Road 9 and the proposed trail. Material may be used as fill material in the parking areas and trail as approved by the Contracting
- Fill all voids larger ±3" on all sides of the retaining wall with rocks similar in composition and shaped to best fit within the void. Place rocks from the inside of the wall when possible so not to be easily removed.
- Slope away from the bottom of the retaining wall at a 4:1 minimum, slope at a less steep grade if necessary. Continue slope until it catches the existing ground.
- Washed aggregate shall be ±24" x ±12", full length of the retaining walls. Bottom of washed aggregate shall be approximately the same elevations as the top of the slope on the opposite side of the retaining wall.

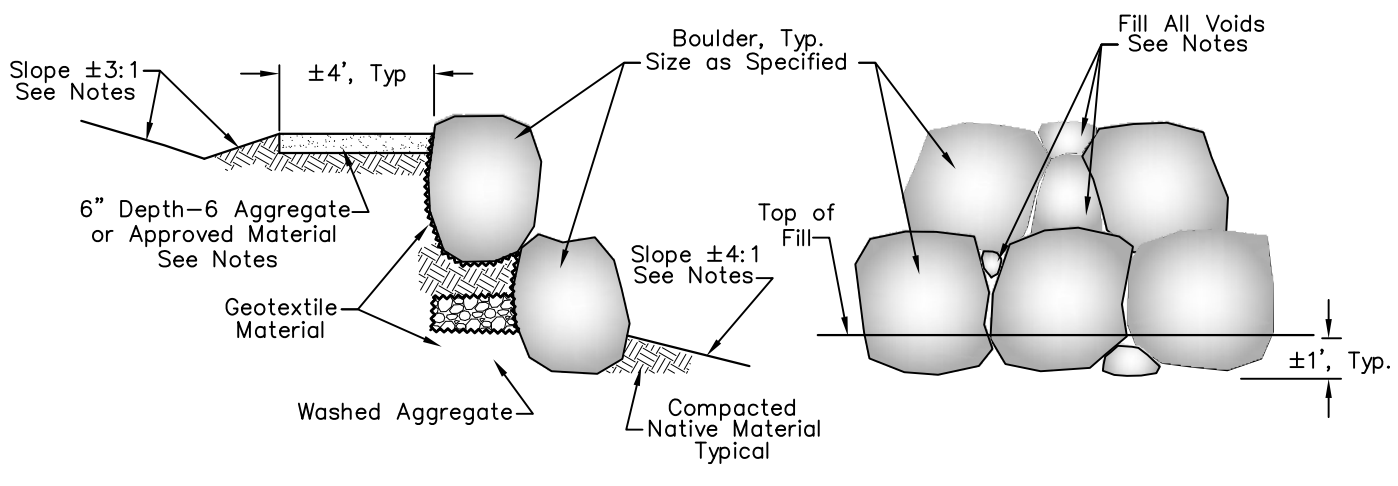

Cross Section View

Front Section View

Boulder Retaining Wall–Two Tier
Typical

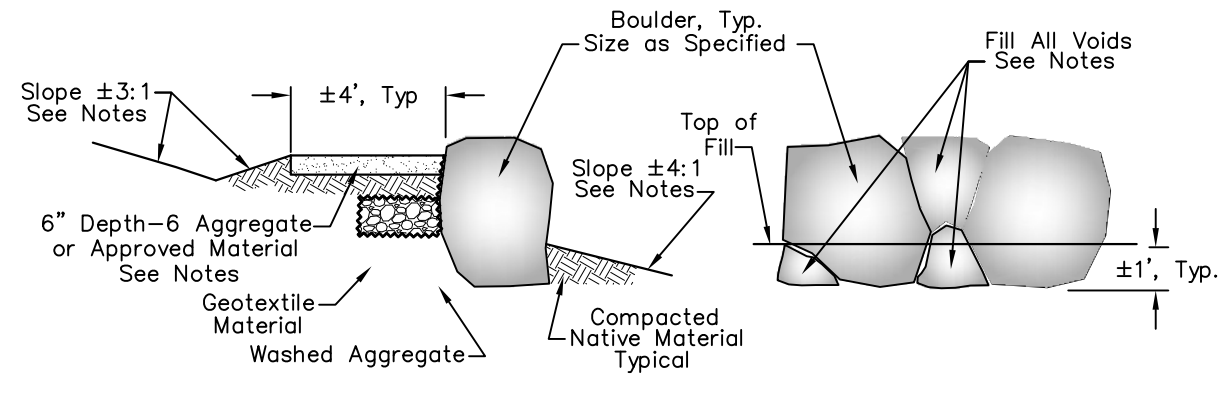

Cross Section View

Front Section View

Boulder Retaining Wall–One Tier
Typical

U.S. DEPARTMENT OF THE INTERIOR
BUREAU OF LAND MANAGEMENT

UNITED STATES DEPARTMENT OF THE INTERIOR
BUREAU OF LAND MANAGEMENT

Trail & Retaining Wall Sections

Park Center Well 2014

Front Range District

MARK	DESCRIPTION	DATE	APPROVED

PROJECT NO: LDDMP0580000
DESIGN OFFICE: LLCO952000
DESIGNED BY: BCV
DRAWN BY: BCV
CHK'D BY:
APPROVED BY:
DATE: 07/2014

SHEET 10 OF 12

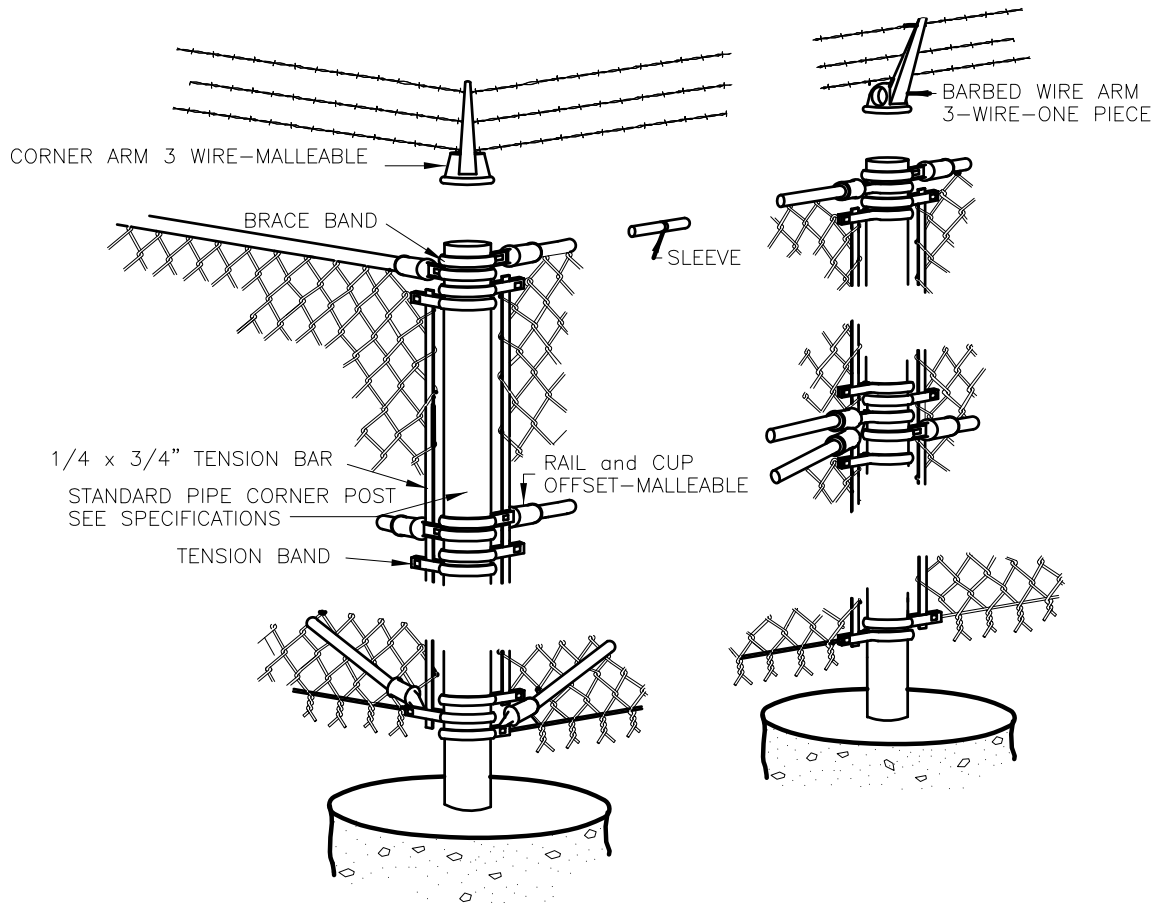

CHAIN LINK FENCE ASSEMBLY

w\ONE–PIECE BARBED WIRE ARM (3–WIRE)
NO SCALE

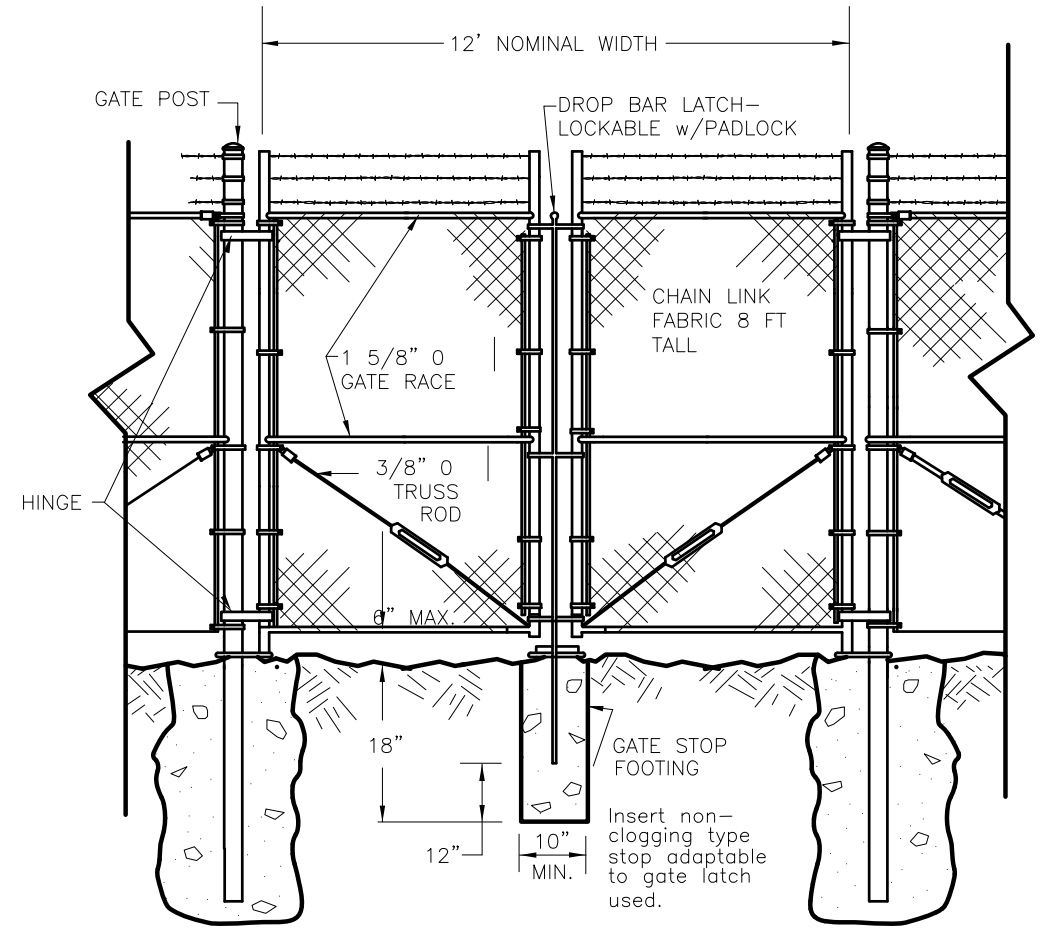

DOUBLE PANEL SWING GATE

NO SCALE

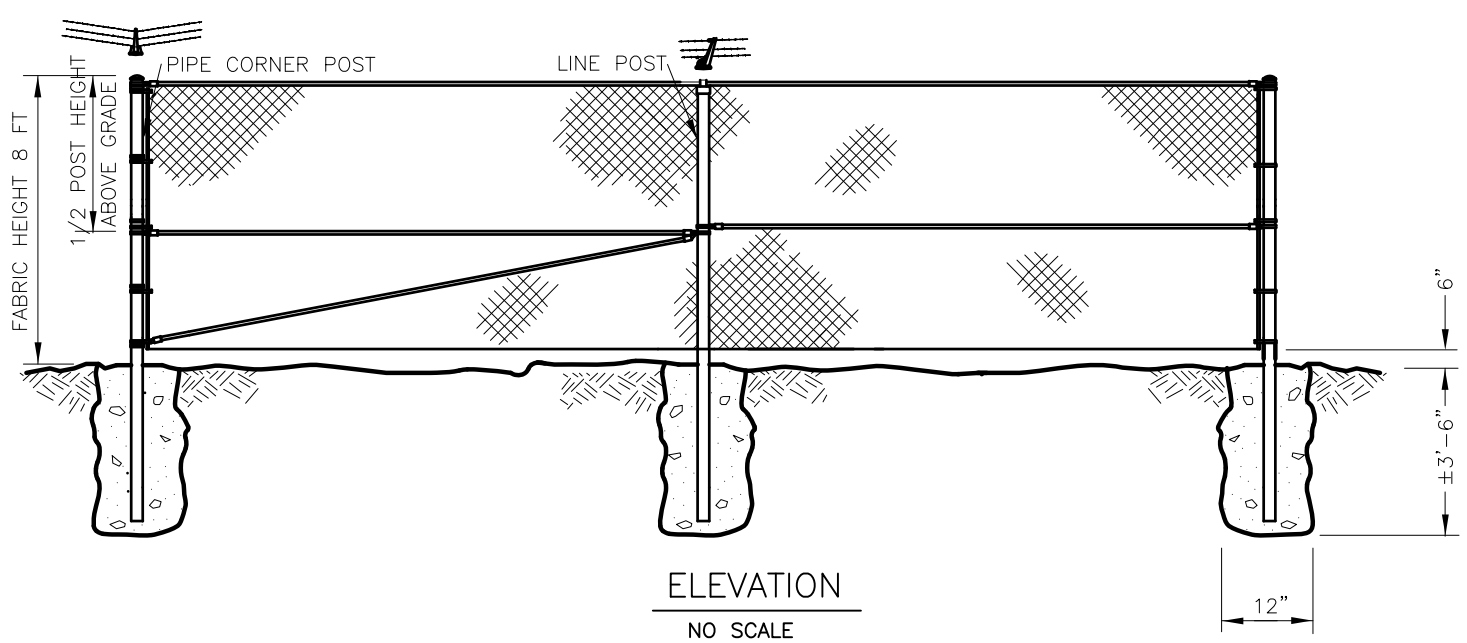

ELEVATION

NO SCALE

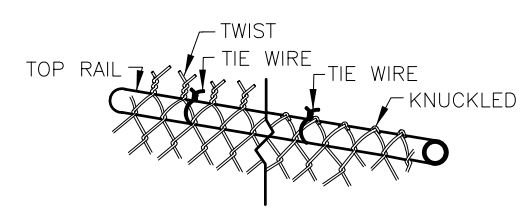

FABRIC SELVAGE

NO SCALE

U.S. DEPARTMENT OF THE INTERIOR
BUREAU OF LAND MANAGEMENT

UNITED STATES DEPARTMENT OF THE INTERIOR
BUREAU OF LAND MANAGEMENT

Chain Link Fence Details, Typical

Park Center Well 2014

Front Range District

Colorado

MARK	DESCRIPTION	DATE	APPROVED

PROJECT NO: LDDMP0580000
DESIGN OFFICE: LLCO9520000
DESIGNED BY: others
DRAWN BY: others
CHK'D BY:
APPROVED BY:
DATE: 07/2014

11

SHEET 11 OF 12

–Partially bury boulders as shown, grade area adjacent to boulders to match adjacent slopes and elevations. Hand rake if necessary.

–Install single landscape boulders in the same manner as grouped boulder installations.

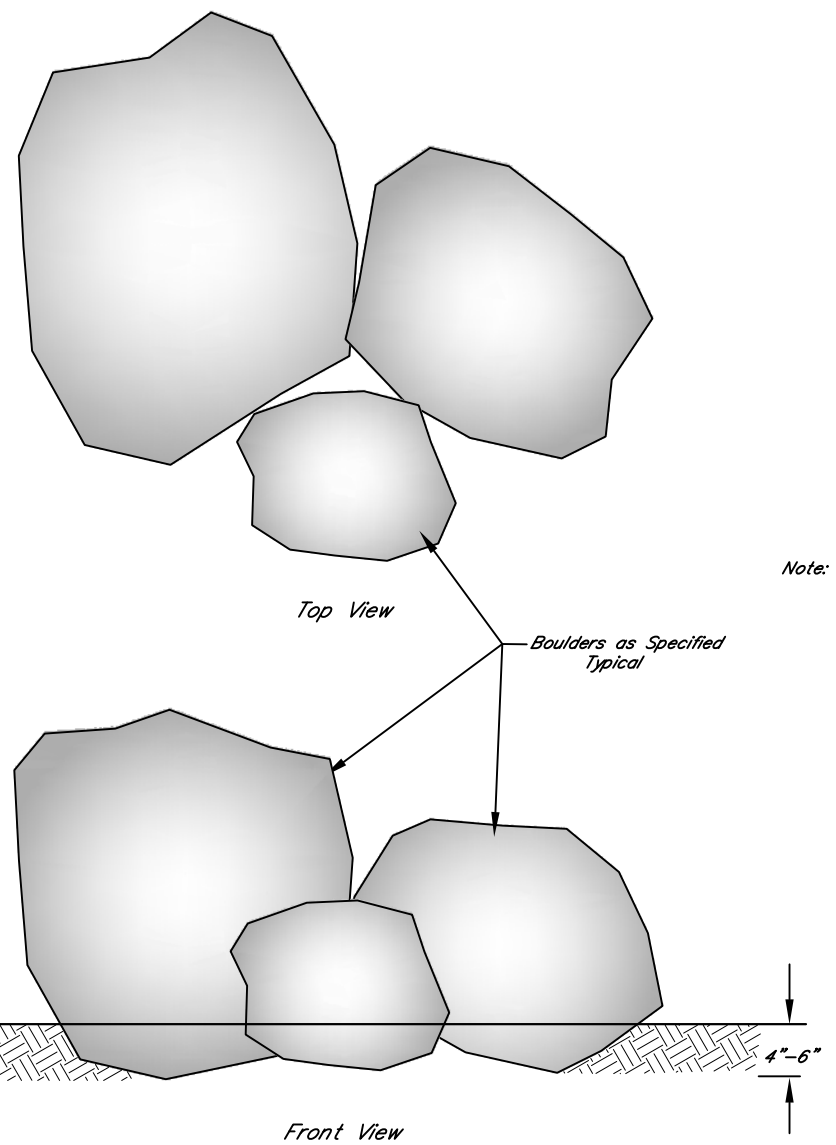

Landscape Boulders

Note:

––Pound rebar flush with top of pipe. Weld to top pipe and grind smooth.

––Top of pipe shall be set 3" above finished grade.

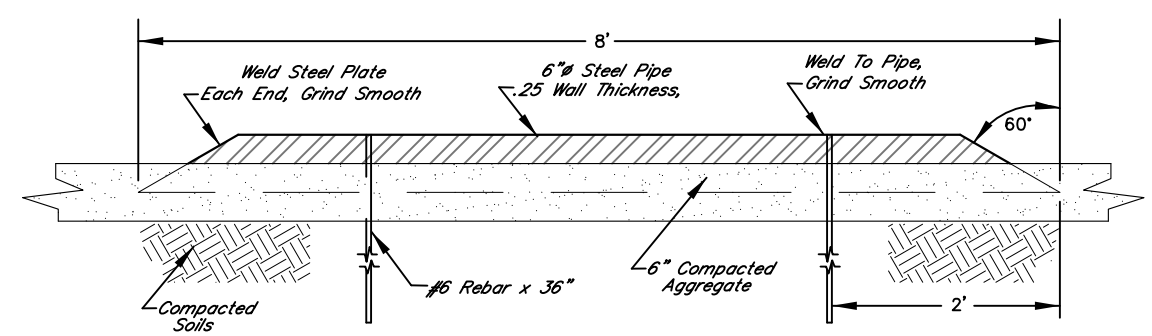

Steel Parking Stop

U.S. DEPARTMENT OF THE INTERIOR
BUREAU OF LAND MANAGEMENT

UNITED STATES DEPARTMENT OF THE INTERIOR
BUREAU OF LAND MANAGEMENT

Details

Park Center Well 2014

Front Range District

CO

MARK	DESCRIPTION	DATE	APPROVED

PROJECT NO: LDDMP0580000
DESIGN OFFICE: LLC0952000
DESIGNED BY: others
DRAWN BY: BCV
CHK'D BY:
APPROVED BY:
DATE: 07/2014

SHEET 12 OF 12