# 140R6026Q0098 - SOURCES SOUGHT NOTICE
# Downs Protective Dike
# Pumping Unit Repair and Generator Replacement

This Sources Sought Notice is issued in accordance with Federal Acquisition Regulation (FAR) Part 10. It does not constitute a solicitation or any commitment to contract. This notice is not a request for quotations and the information presented in this announcement will not obligate the Bureau of Reclamation in any manner.

**This request is part of the Government's market research efforts to identify and gather information on potential sources capable of providing pump repair and generator replacement services located in Downs, Kansas.** The anticipated contract action is not expected to exceed the Simplified Acquisition Threshold (SAT).

Respondents are advised that the Government will not pay for any information submitted or for any administrative costs incurred in response to this notice. All costs associated with responding to this request will be solely at the respondent's expense.

The Government anticipates utilizing North American Industry Classification System (NAICS) code 811310, Commercial and Industrial Machinery and Equipment (Pump Repair), which carries a small business size standard of $12.5 million. The corresponding Product Service Code (PSC) is expected to be J043, Maint/Repair/Rebuild of Equipment – Pumps and Compressors. Interested parties are invited to submit written comments or recommendations regarding the proposed NAICS and PSC designations if they believe alternative classifications may be more appropriate. The Government reserves the right to revise the proposed NAICS and/or PSC designations based on feedback received.

A firm-fixed-price contract is contemplated. The anticipated solicitation release date is late July or early August 2026, with an anticipated period of performance of 180 days from contract award.

**<u>Small Business Sources</u> are encouraged to respond with a capability statement if your company is interested and can demonstrate the firm's ability, capability, and responsibility to provide the services and supplies detailed in the attached draft work statement.**

Interested **<u>Small Business Sources</u>** are invited to submit a capability statement of no more than 5 pages addressing:

(a) Business name, address, and point of contact information.

(b) Unique Entity ID for SAM.gov

(c) Business size status and socio-economic designation (8(a), HUBZone, Women-owned, Service-Disabled Veteran- Owned, Indian Small Business Economic Enterprise, Small Business, etc.)

(d) Experience performing similar and relevant pump repair services within the last 5 years. Additionally, include any relevant experience with supply purchases for similar generators.

(e) Any comments or recommendations regarding the proposed NAICS and PSC designations.

Responses to this notice are strictly voluntary and will not in any way affect the ability to submit a quotation, nor will it have any effect on the evaluation of any contractor's response to a future solicitation should one be issued.

**Responses to this notice should be submitted to Dwane D. Esplin, dwane_esplin@ios.doi.gov by July 8, 2026, 5:00 PM (MDT).**

Prospective contractors must be registered and must maintain active registration in the System for Award Management, (SAM). Prospective contractors must be registered in SAM prior to submitting a quote for the future solicitation should one be issued. Lack of registration in the SAM database will make a vendor ineligible for the prospective award. Information on SAM registration can be obtained via the internet at http://www.sam.gov.

**DOWNS PROTECTIVE DIKE**
**PUMPING UNIT REPAIR AND GENERATOR REPLACEMENT**
**Pick-Sloan Missouri Basin Program**
**Kansas**

**Summary of Work:**

This work statement outlines required services to include repair of two pumping units and replacement of a backup generator. Services summary below:

- Mobilization
- Removal of pumping units
- Repair of pumping units
- Re-installation of pumping units
- Installation of flexible hose-type grease lines.
- Commissioning of pumping units within manufacturer's specifications.
- Supply and installation of generator unit.

**Site Conditions:**

The work is located at the Downs Protective Dike, Downs Kansas. See Exhibit A.

The pumping units are in the Downs pump house. Removal of a roof access hatch is required and shall be completed by the Contractor. Roof hatch shall be reinstalled after removal of pumping units to prevent water from entering pump building. Removal of the pumps shall require a large crane with a horizontal reach of approximately 90 feet. See Exhibit B for facility drawings.

**NOTE: Crane / pulling unit will not be allowed on the access bridge that connects from the dike crest to the pump house.**

**Pumping Unit Details:**

The pumping units were replaced in 2020. One pumping unit exhibited excessive vibration after installation that required additional adjustments for run-out. In 2023, the oil system ran over, and it was undetermined if the oiler was applying excess oil or if there was a blockage in the line. In 2025, the pump was run and excessive vibration began that caused a retaining collar on the bottom side of the motor to come loose as well as excessive wear in the seal housing bearing. Additionally, the pumping unit motor has exhibited higher operating temperatures than the other unit. The unit was taken offline in 2025.

In 2026, the grease line to the second pumping unit suction bearing was broken off. The unit may have run as much as 100 hours with the detached grease line.

Both pumping units and motors are identical.

**Repair Details:**

The Contractor shall remove the pumping units, disassemble them, perform inspections, and replace all worn or damaged components as identified during inspection. The lineshafts shall be inspected for damage and checked for straightness according to the manufacturer's instruction manual. The Contractor shall document all inspection findings. Additionally, all seals and bearings shall be replaced with factory specified parts. Bearings in the motor shall be replaced with factory specified parts. See Exhibit C for details on parts, and installation procedures.

The Contractor shall notify the Contracting Officer of any components, other than bearings and seals, that show damage or excessive wear. The Contractor shall provide a cost proposal (including parts, labor, profit, etc) to the Contracting Officer for review and memorialized via supplemental agreement. Replacement of these components shall not occur until a supplemental agreement modification is issued for an equitable adjustment to the contract.

**NOTE: Damage done to components, by the Contractor, during the performance of the Contract shall be corrected at no cost to the Government.**

The Contractor shall reassemble the pumping units, reinstall pumping units, and make final performance adjustments including replacing all lubricants in accordance with the manufacturer's installation instructions. See Exhibit C. The Contractor shall replace steel grease lines with flexible hose-type grease lines.

**Generator Details:**

The existing generator is in the generator building on top of the dike and adjacent to the pump house access bridge. See Exhibit B.

The Contractor shall remove existing generator. After removal, the existing generator shall become the Contractor's property for disposal. Existing generator shall not be removed until the replacement generator is onsite and ready for installation.

The Contractor shall provide and install a replacement generator with the following salient characteristics:

Minimum Prime Power Rating: 180KW/225KVA
Phase: 3
Voltage: 277/480
Fuel: Diesel
The generator shall not exceed the following maximum dimensions:

Length: 144 inches
Width: 66 inches
Height: 72 inches

Factory-authorized service provider shall be within ~200 miles of Downs, KS.

The Contractor shall include with the generator the standard commercial warranty as provided by the manufacturer at no additional cost to the government.

The Contractor shall provide and install a 500 gallon fuel tank with double wall integral containment. Open containment basins will not be acceptable. Fuel tank shall be located outside, on the east side of the generator building.

Electrical work shall be performed by an electrician licensed by the State of Kansas.

**NOTE: Contractor shall follow Section 1.03 of Reclamation Safety and Health Standards (RSHS). The RSHS can be found at https://www.usbr.gov/safety/rshs/index.html.**

**Period of Performance:**

Contractor shall complete all work within 180 days after prospective contract award.

**The Contractor shall submit the following:**

**Pumping units:**

- Documentation of pump inspection and listing of all replaced components and lubricants to be used prior to reinstallation of pumping units.
- Measurements taken during installation as directed in Exhibit D.

**Generator:**

- Specifications including datasheet and warranty information.
- Name and location of factory authorized service providers.
- Fuel tank specifications

**Other Information:**

Pumping unit information is provided in Exhibit D.
Photographs are provided in Exhibit E.

**Listing of Exhibits:**

Exhibit A – Location Map

Exhibit B – Facility Drawings

Exhibit C – Manufacturer's Installation Instructions.

Exhibit D – Pumping Unit Information

Exhibit E – Photographs

# Exhibit A – Location Map

# Tessel Web Map

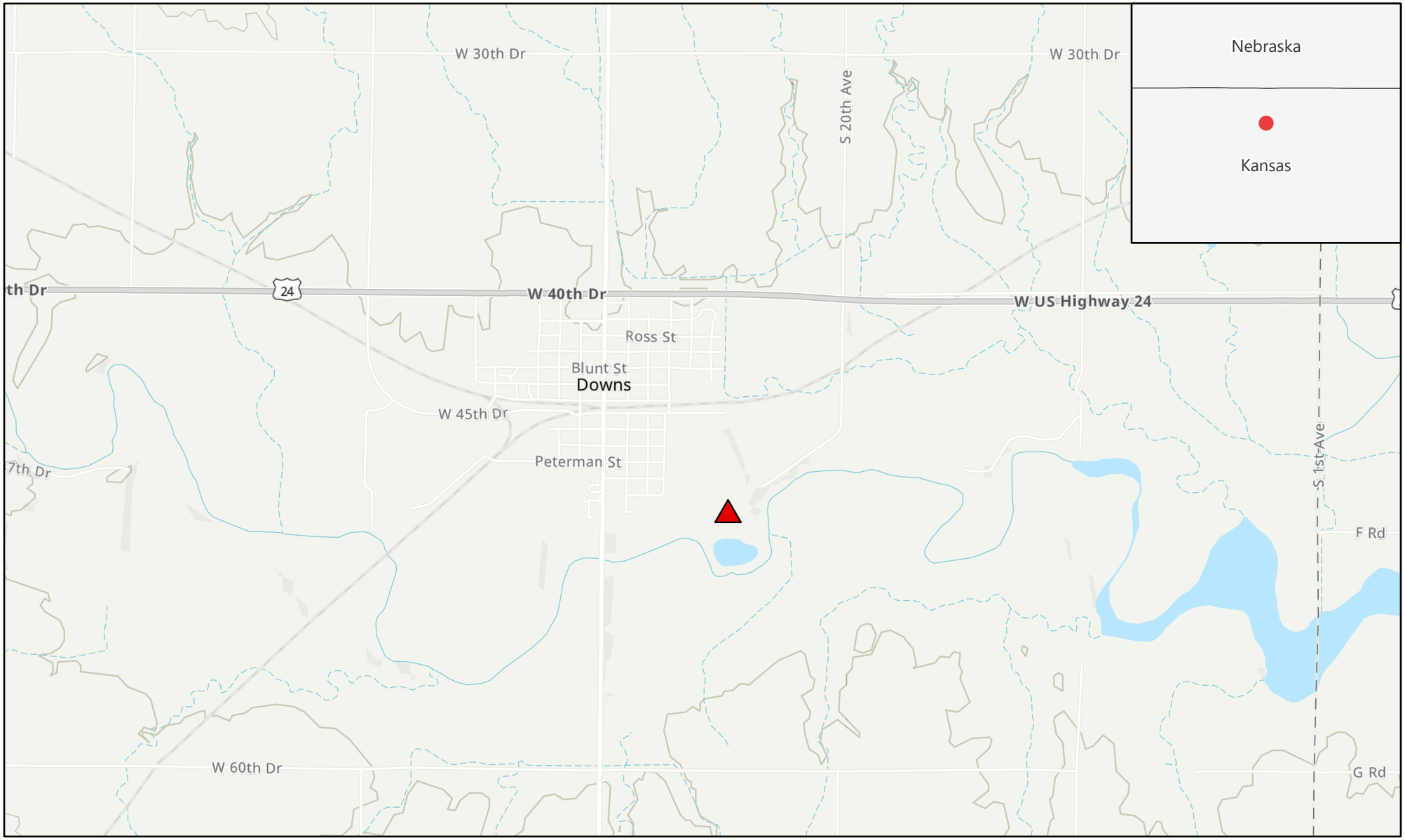


Dams

High Hazard Potential

mi
0 0.65 1.3

DISCLAIMER: This map and data are provided as-is and are intended for general reference only. None of the parties involved in preparing the map or data contained herein warrant or represent the data to be complete and accurate.

Date: 3/4/2025

# Exhibit B – Facility Drawings

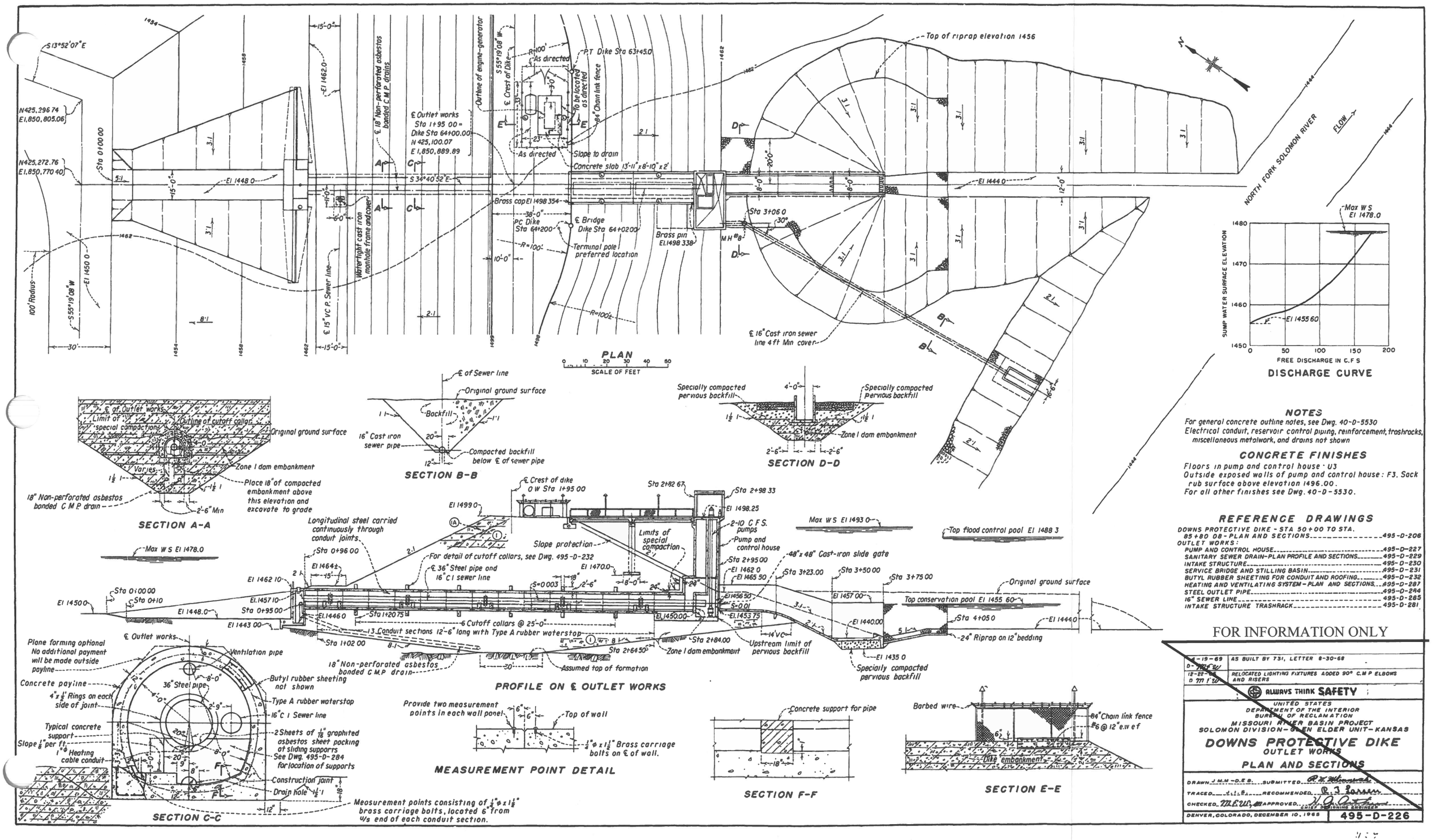


## NOTES

For general concrete outline notes, see Dwg. 40-D-5530
Electrical conduit, reservoir control piping, reinforcement, trashracks, miscellaneous metalwork, and drains not shown

## CONCRETE FINISHES

Floors in pump and control house: U3
Outside exposed walls of pump and control house: F3. Sack rub surface above elevation 1496.00.
For all other finishes see Dwg. 40-D-5530.

## REFERENCE DRAWINGS

DOWNS PROTECTIVE DIKE - STA 50+00 TO STA. 85+80.08 - PLAN AND SECTIONS ..... 495-D-206
OUTLET WORKS:
- PUMP AND CONTROL HOUSE ..... 495-D-227
- SANITARY SEWER DRAIN-PLAN PROFILE AND SECTIONS ..... 495-D-229
- INTAKE STRUCTURE ..... 495-D-230
- SERVICE BRIDGE AND STILLING BASIN ..... 495-D-231
- BUTYL RUBBER SHEETING FOR CONDUIT AND ROOFING ..... 495-D-232
- HEATING AND VENTILATING SYSTEM - PLAN AND SECTIONS ..... 495-D-287
- STEEL OUTLET PIPE ..... 495-D-244
- 16" SEWER LINE ..... 495-D-285
- INTAKE STRUCTURE TRASHRACK ..... 495-D-281

FOR INFORMATION ONLY

| | |
|---|---|
| 4-19-69 D-777 F.W. | AS BUILT BY 731, LETTER 8-30-68 |
| 12-22-68 D 777 F.W. | RELOCATED LIGHTING FIXTURES ADDED 90° C.M.P ELBOWS AND RISERS |

ALWAYS THINK SAFETY

UNITED STATES
DEPARTMENT OF THE INTERIOR
BUREAU OF RECLAMATION
MISSOURI RIVER BASIN PROJECT
SOLOMON DIVISION - GLEN ELDER UNIT - KANSAS

# DOWNS PROTECTIVE DIKE
## OUTLET WORKS
## PLAN AND SECTIONS

DRAWN J.N.M.-D.E.B. SUBMITTED R. W. Wilcomb
TRACED J.L.S. RECOMMENDED R. J. Sorensen
CHECKED M.E.W. APPROVED V. A. Ostrom (CHIEF DESIGNING ENGINEER)

DENVER, COLORADO, DECEMBER 10, 1965 — 495-D-226

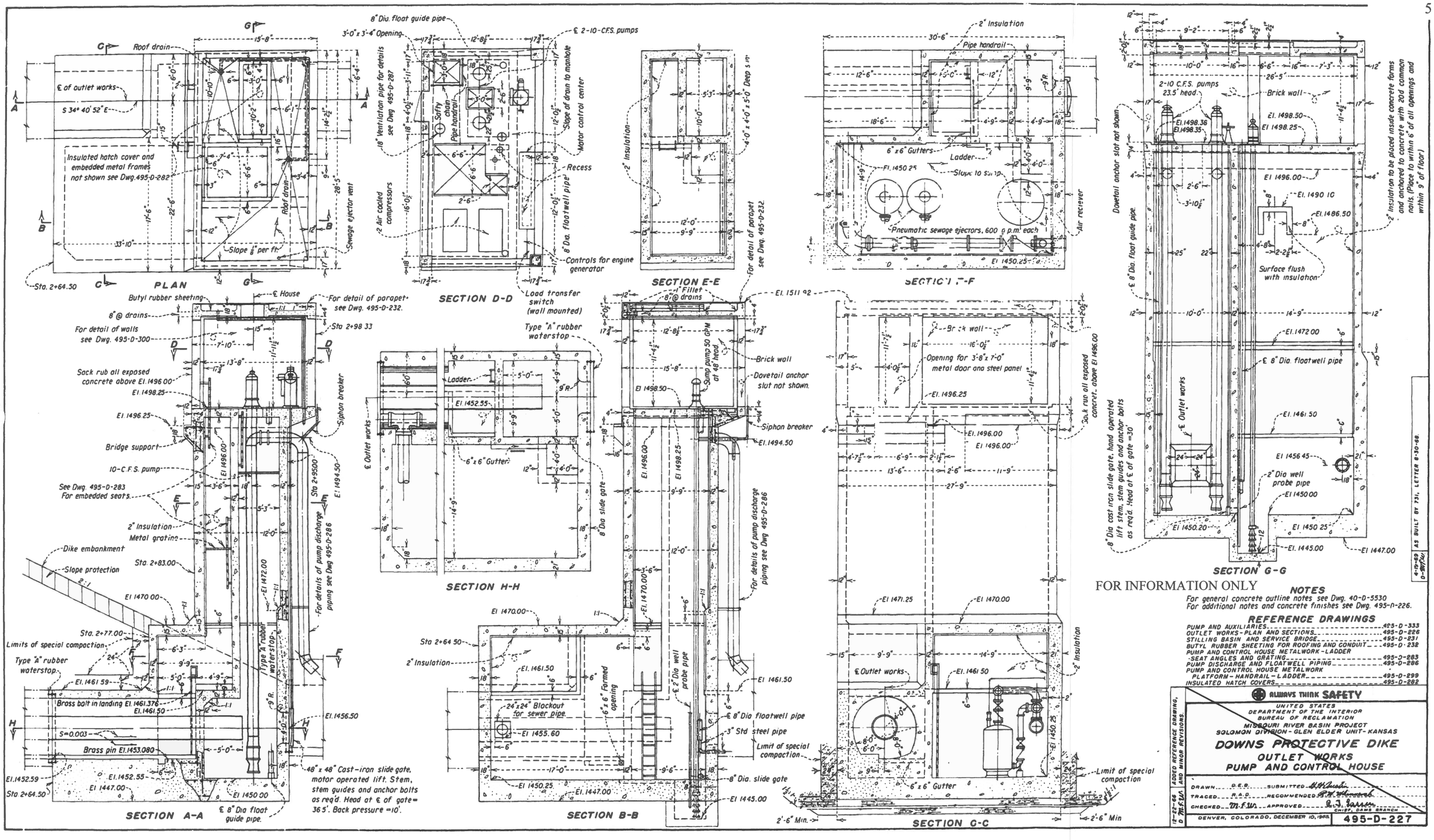


FOR INFORMATION ONLY

## NOTES

For general concrete outline notes see Dwg. 40-D-5530
For additional notes and concrete finishes see Dwg. 495-D-226.

## REFERENCE DRAWINGS

| | |
|---|---|
| PUMP AND AUXILIARIES | 495-D-333 |
| OUTLET WORKS - PLAN AND SECTIONS | 495-D-226 |
| STILLING BASIN AND SERVICE BRIDGE | 495-D-231 |
| BUTYL RUBBER SHEETING FOR ROOFING AND CONDUIT | 495-D-232 |
| PUMP AND CONTROL HOUSE METALWORK - LADDER - SEAT ANGLES AND GRATING | 495-D-283 |
| PUMP DISCHARGE AND FLOATWELL PIPING | 495-D-286 |
| PUMP AND CONTROL HOUSE METALWORK PLATFORM - HANDRAIL - LADDER | 495-D-299 |
| INSULATED HATCH COVERS | 495-D-282 |

ALWAYS THINK SAFETY

UNITED STATES
DEPARTMENT OF THE INTERIOR
BUREAU OF RECLAMATION
MISSOURI RIVER BASIN PROJECT
SOLOMON DIVISION - GLEN ELDER UNIT - KANSAS

# DOWNS PROTECTIVE DIKE

## OUTLET WORKS
## PUMP AND CONTROL HOUSE

12-22-68 ADDED REFERENCE DRAWING, D. M.F.W. AND MINOR REVISIONS

DRAWN D.E.D. SUBMITTED
TRACED R.A.D. RECOMMENDED
CHECKED M.F.W. APPROVED
CHIEF, DAMS BRANCH

DENVER, COLORADO, DECEMBER 10, 1968

495-D-227

# Exhibit C – Manufacturer's Instructions

**INSTRUCTION MANUAL**

IOMGWVITR02

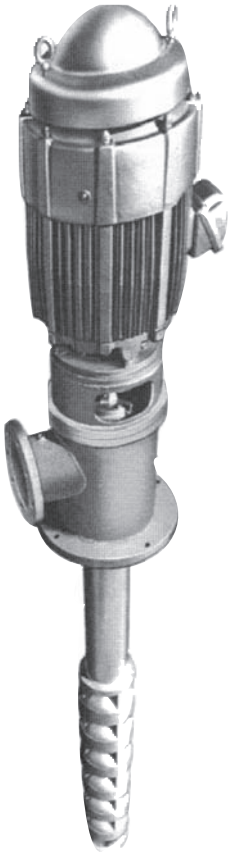

# MODEL VIT

VERTICAL INDUSTRIAL TURBINE PUMPS

**INSTALLATION, OPERATION AND MAINTENANCE INSTRUCTIONS**

GOULDS WATER TECHNOLOGY

a xylem brand

# Foreword

This manual provides instructions for the Installation, Operation, and Maintenance of the Goulds Water Technology Vertical Industrial Turbine Pumps. This manual covers a standard product. For special options, supplemental instructions are available. **This manual must be read and understood before installation and start-up.**

This instruction manual covers several different pump models. Most assembly, disassembly, and inspection procedures are the same for all the pumps. However, where there are differences, these differences will be noted within the manual. The design, materials and workmanship incorporated in the construction of the Goulds Water Technology VIT Pumps makes them capable of giving long, trouble-free service. The life and satisfactory service of any mechanical unit, however, is enhanced and extended by correct application, proper installation, periodic inspection, condition monitoring and careful maintenance. This instruction manual was prepared to assist operators in understanding the construction and the correct methods of installing, operating, and maintaining these pumps.

The information contained in this book is intended to assist operating personnel by providing information on the characteristics of the purchased equipment. It does not relieve the user of their responsibility of using accepted safe engineering practices in the installation, operation and maintenance of this equipment.

**Goulds Water Technology shall not be liable for physical injury, death, damage, or delays caused by a failure to observe the instructions for installation, operation and maintenance contained in this manual.**

**Warranty is valid only when genuine Goulds Water Technology parts are used.**

Use of the equipment on a service other than stated in the order will nullify the warranty, unless written approval is obtained in advance from Goulds Water Technology.

For information or questions not covered in this manual, contact Goulds Water Technology at (806) 763-7867.

**THIS MANUAL EXPLAINS :**

- Proper Installation
- Start-up Procedures
- Operation Procedures
- Routine Maintenance
- Pump Overhaul
- Trouble Shooting
- Ordering Spare or Repair Parts

# Table of Contents


**SUBJECT** **PAGE**

SECTION 1 – Safety ..... 4
- Safety Instructions ..... 4
- General Precautions ..... 4

SECTION 2 – General Information ..... 4
- Introduction ..... 4
- Receiving and Checking ..... 4
- Materials and Equipment Required ..... 5
- Storage ..... 5
- General Description ..... 6
- Typical Drawings ..... 7-10

SECTION 3 – Installation ..... 11
- Foundation / Piping ..... 11
- Pump Installation ..... 12
- Installing the Bowl Assembly ..... 12
- Installing the Column ..... 13
- Installing the Discharge Head ..... 15
- Installing the Stuffing Box ..... 15
- Installing the Mechanical Seal ..... 16
- Mechanical Seal Alignment ..... 16
- Installing the Tension Plate ..... 17
- Installing the Driver ..... 19
- Installing the Thrust Pot ..... 22

SECTION 4 – Pump Start Up and Operation ..... 24

SECTION 5 – Maintenance ..... 26
- Preventive Maintenance ..... 26
- Packing Adjustment and Replacement ..... 26
- Seasonal Shutdown ..... 26
- Thrust Pot Lubrication and Maintenance ..... 27
- Recommended Lubricants ..... 28
- Troubleshooting ..... 29

SECTION 6 – Disassembly and Reassembly ..... 31
- Disassembly ..... 31
- Inspection and Reassembly ..... 32

SECTION 7 – Repair Parts ..... 34

Limited Warranty ..... 36

## Safety Instructions – SECTION 1

**TO AVOID SERIOUS OR FATAL PERSONAL INJURY OR MAJOR PROPERTY DAMAGE, READ AND FOLLOW ALL SAFETY INSTRUCTIONS IN THE MANUAL AND ON THE PUMP.**

This is a **SAFETY ALERT SYMBOL.** When you see this symbol on the pump or in the manual, look for one of the following signal words and be alert to the potential for personal injury or property damage.

**DANGER** Warns of hazards that **WILL** cause serious personal injury, death or major property damage.

**WARNING** Warns of hazards that **CAN** cause serious personal injury, death or major property damage.

**CAUTION** Warns of hazards that **CAN** cause personal injury or property damage.

**NOTICE:** INDICATES SPECIAL INSTRUCTIONS WHICH ARE VERY IMPORTANT AND MUST BE FOLLOWED.

**THIS MANUAL IS INTENDED TO ASSIST IN THE INSTALLATION AND OPERATION OF THIS UNIT. THOROUGHLY REVIEW ALL INSTRUCTIONS AND WARNINGS PRIOR TO PERFORMING ANY WORK ON THIS PUMP.**

**MAINTAIN ALL SAFETY DECALS.**

**WARNING**

Hazardous voltage can shock, burn or cause death.

Install, ground and wire according to local and National Electrical Code Requirements.

Install an all leg disconnect switch near the pump.

Disconnect and lockout electrical power before installing or servicing the pump.

Electrical supply must match motor's nameplate specifications. Incorrect voltage can cause fire, damage motor and void the warranty.

Single phase pump motors are equipped with an automatic thermal protector, which opens the motor's electrical circuit when an overload condition exists. This can cause the pump to start unexpectedly.

## General Precautions

**WARNING** *Personal injuries will result if procedures outlined in this manual are not followed*

**CAUTION** *Electric supply MUST match pump's nameplate specifications. Incorrect voltage can cause fire, damage to motor and voids warranty.*

**Safety Apparel:**

- Insulated work gloves when handling hot sand collar.
- Heavy work gloves when handling parts with sharp edges, especially impellers.
- Safety glasses (with side shields) for eye protection.
- Steel-toed shoes for foot protection when handling parts, heavy tools, etc.
- Other personal protective equipment to protect against hazardous/toxic fluid.

**Maintenance Safety:**

- Always lock out power.
- Ensure pump is isolated from system and the pressure is relieved before disassembling the pump, removing plugs, or disconnecting the piping.
- Use proper lifting and supporting equipment to prevent serious injury or death.
- Observe all decontamination procedures.

## General Information – SECTION 2

### INTRODUCTION

NOTE: **The information in this manual intends to be used as a guide only. If you are in doubt, consult your Goulds Water Technology representative for specific information about your pump.**

The design, material, and workmanship incorporated in the construction of Goulds Water Technology VIT Pumps makes them capable of giving long, trouble free service. The life and satisfactory service of any mechanical unit, however, is enhanced and extended by correct application, proper installation, periodic inspection and careful maintenance. This instruction manual was prepared to assist operators in understanding the construction and the correct methods of installing, operating and maintaining these pumps.

**WARNING** *Rotating components of the pump assembly must be covered with a suitable rigid guard to prevent injury to personnel.*

Study thoroughly Sections 1 through 6 and carefully follow the instructions for installing and operating. Sections 5 contains answers to troubleshooting and maintenance questions. Keep this instruction manual handy for reference.

**CAUTION** *Goulds Water Technology will not be liable for any damages or delay caused by failure to comply with the provisions of this instruction manual.*

### RECEIVING AND CHECKING

The pump should be carefully supported prior to unloading from the carrier. Handle all components carefully. Inspection for damage of the shipping crate should be made prior to unpacking the pump. After unpacking, visually inspect the pump and check the following:

1. Contents of the pump assembly against the packing list.
2. All components against damage.
3. All shafting for damage, should the crate be broken or show careless handling. All shafting must be checked for straightness.

**Any shortages or damages should be immediately called to the attention of the local freight agent of the carrier by which the shipment arrived and proper notation made on the bill.** This will prevent any controversy when a claim is made and facilitate prompt and satisfactory adjustment.

## EQUIPMENT REQUIRED

The material and equipment necessary for installation of the pump will vary with the size of the pump and the type of installation.

The following list of standard tools and supplies is offered only as a guide.

### BULK MATERIAL

- Anti-Galling lubricant (such as Dow Corning "MOLYKOTE")
- Thread Compound
- Lubrication Oil
- Turbine Oil
- Grease

### RIGGING EQUIPMENT

- Mobile power hoist, traveling crane or derrick.
- Drag line and blocks.
- Lifting Bail for Threaded Column.
- Elevator clamps, if unit is unassembled.
- Clevises – for use with eyebolts.
- Timbers – size, length and quantity to support long pump parts on the floor.
- I-Beams or timbers to support pump over installation.

### HAND TOOLS

- Pipe wrenches
- Feeler gauges
- Machinist Level
- Set of mechanics tools including: files, wire brush, pliers, wire cutters and pocket knife.
- Clean rags
- Dial indicator to assist in motor and pump alignment

### OPTIONAL TOOLS TO FACILITATE PUMP ASSEMBLY AND DISASSEMBLY

- Taperlock driver to assist in bowl assembly and disassembly for pumps with taper lock impellers only.

## STORAGE

Goulds Water Technology carefully preserves and protects its products for shipment. However, the effective life of the preservatives applied at the factory can vary from 3 to 18 months depending on the severity of the environment in which the equipment is stored. This section provides procedures for preparation prior to storage and maintenance during storage of Goulds Water Technology VIT Pumps. These procedures are necessary to protect the precision parts of the pumps. Specific procedures for storing motors, gear drivers, and engines, should be obtained from the equipment manufacturer. This section is intended to be of general assistance to users of Goulds Water Technology VIT Pumps. It shall not modify, amend and/or otherwise alter the scope of Goulds Water Technology VIT Pumps warranty responsibilities to the purchaser in any way whatsoever.

### Storage Preparation

Goulds Water Technology VIT Pumps require proper preparation for storage and regular maintenance during storage. The pump shall be considered in storage when it has been delivered to the job site and is awaiting installation.

Preferably, the storage area shall be paved, well drained and free from flooding, and be indoors whenever possible.

Weatherproof coverings used for outdoor storage shall be flame resistant type sheeting or tarpaulins. They shall be placed so as to provide good drainage and air circulation and shall be tied down to protect from wind damage.

Storage area shall be maintained in a clean condition at all times.

Pumps and/or component parts shall be placed on skids, pallets, or shoring to permit good air circulation.

Pumps and/or component parts shall be sorted so as to permit ready access for inspection and/or maintenance without excessive handling.

Pumps and/or component parts stacked during storage shall be arranged so that the racks, containers, or crates bear full weight without distortion of pumps or parts. Identification markings must be readily visible. Any cover removed for internal access shall be replaced immediately.

Pump and bowl assembly shafting shall be rotated counter clockwise, as a minimum, once a month. Shaft shall not be left in the same previous position, nor in the extreme raised or lowered lateral position. Shaft should rotate freely.

**NOTE: For further information on these procedures contact your Goulds Water Technology representative.**

### Recommended Storage Procedures

Controlled storage facilities should be maintained at an even temperature 10° F (6° C) or more **above the dew point** with relative humidity less than 50% and little or no dust. (If these requirements can not be met the pump is to be considered in uncontrolled storage.)

For uncontrolled storage periods of 6 months or less, the pump is to be inspected periodically to insure that all preservatives are intact.

All pipe threads and flanged pipe covers are to be sealed with tape.

The pump must not be stored closer than six inches (15 cm) from the ground.

### Uncontrolled Long Term Storage Preparations

When applicable to the pump, storage periods over six months require the preceding storage procedure and storage preparation plus the following:

Inspect the lube oil and seal flush piping and either fill the piping with rust preventative oil, or re-coat the piping periodically to prevent corrosion.

Place 10 pounds (4.5 kg) of moisture absorbing desiccant or 5 pounds (2.3 kg) of vapor phase inhibitor crystals near the center of the pump. If the pump is assembled, place an additional one pound (0.5 kg) in the discharge nozzle securely fastened to the discharge elbow.

Install a moisture indicator near the perimeter of the pump. Cover the pump with 6 mil (0.15 mm) minimum thickness black polyethylene or equal and seal it with tape. Provide a small ventilation hole approximately ½ inch (12 mm) diameter.

Provide a roof or shed shelter to protect from direct exposure to the elements.

## GENERAL DESCRIPTION

The model VIT pump is a vertical turbine lineshaft pump, which is designed to meet wide ranges of service with maximum dependability. See Figure 1 or Figure 2 for open lineshaft pump and Figure 3 and Figure 4 for enclosed lineshaft pump.

### Drivers

Hollow shaft motors or right angle gear drives, are often used with a separate head shaft through the driver and connected to the pump by a threaded coupling.

### Discharge Head

The discharge head is either a cast iron head or a fabricated head. Ports are provided for connecting the pressure gauge, stuffing box bypass return and lubricator connections. The driver support portion of the discharge head is designed with large windows for easy stuffing box or tension plate adjustment. The windows are covered with guards for safe operation.

### Column

Threaded or flanged column construction provides positive shaft and bearing alignment. Bearings are spaced to provide vibration free operation away from the shaft critical speed in order to insure long bearing life and reduced shaft wear. For open lineshaft, the shaft is supported within the column by using bearing retainers in the column assembly. For enclosed lineshaft, the bearings are also the tube couplings of the shaft-enclosing tube. The shaft-enclosing tube is stabilized in the column pipe by tube stabilizer.

### Bowl Assembly

The bowls are generally of flanged construction for accurate alignment and ease of assembly and disassembly. Impellers may be either open or enclosed depending on the design requirements. They are fastened to the pump shaft by taperlocks. For temperatures over 140° F (60° C) and in the larger size bowls (over 18”), impellers are keyed to the shaft. A special first stage low NPSH impeller may be provided on some pump for certain special application.

### Thrust Pot

A thrust pot is utilized when the driver is not designed to carry the pump thrust.

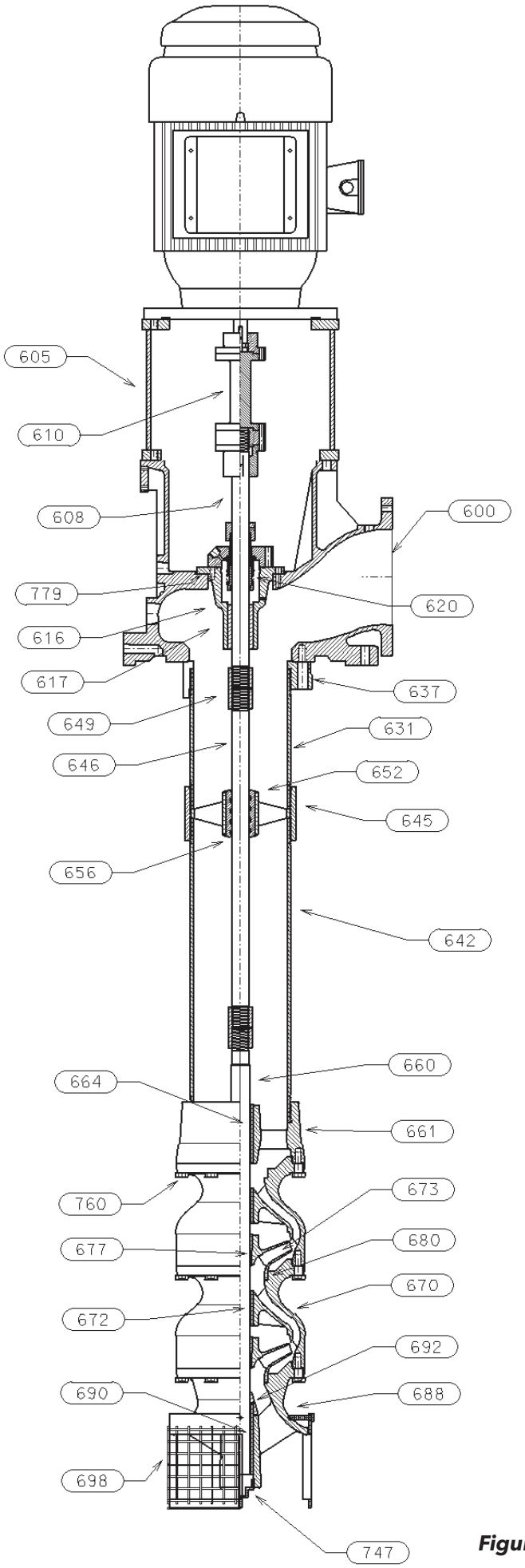


**DISCHARGE HEAD ASSEMBLY**

| ITEM | DESCRIPTION |
|---|---|
| 600 | DISCHARGE HEAD |
| 601 | MOTOR SUPPORT |
| 608 | HEADSHAFT |
| 610 | COUPLING ASSEMBLY |
| 616 | SEAL HOUSING |
| 617 | SEAL HOUSING BEARING |
| 620 | MECHANICAL SEAL |
| 637 | COLUMN FLANGE |
| 779 | SEAL HOUSING GASKET |

**COLUMN ASSEMBLY**

| | |
|---|---|
| 642 | COLUMN PIPE |
| 645 | COLUMN COUPLING |
| 646 | LINESHAFT |
| 649 | LINESHAFT COUPLING |
| 652 | BEARING RETAINER |
| 656 | LINESHAFT BEARING |

**BOWL ASSEMBLY**

| | |
|---|---|
| 660 | BOWL SHAFT |
| 661 | DISCHARGE BOWL |
| 664 | DISCHARGE BEARING |
| 670 | INTERMEDIATE BOWL |
| 672 | INTERMEDIATE BOWL BEARING |
| 673 | IMPELLER |
| 677 | TAPERLOCK |
| 680 | WEAR RING (OPTIONAL) |
| 760 | HEX BOLT |
| 692 | SAND COLLAR |
| 688 | SUCTION BOWL/BELL |
| 690 | SUCTION BEARING |
| 698 | SUCTION STRAINER |
| 747 | PLUG |

***Figure 1*** **Open Lineshaft Pump with Threaded Column Pipe**

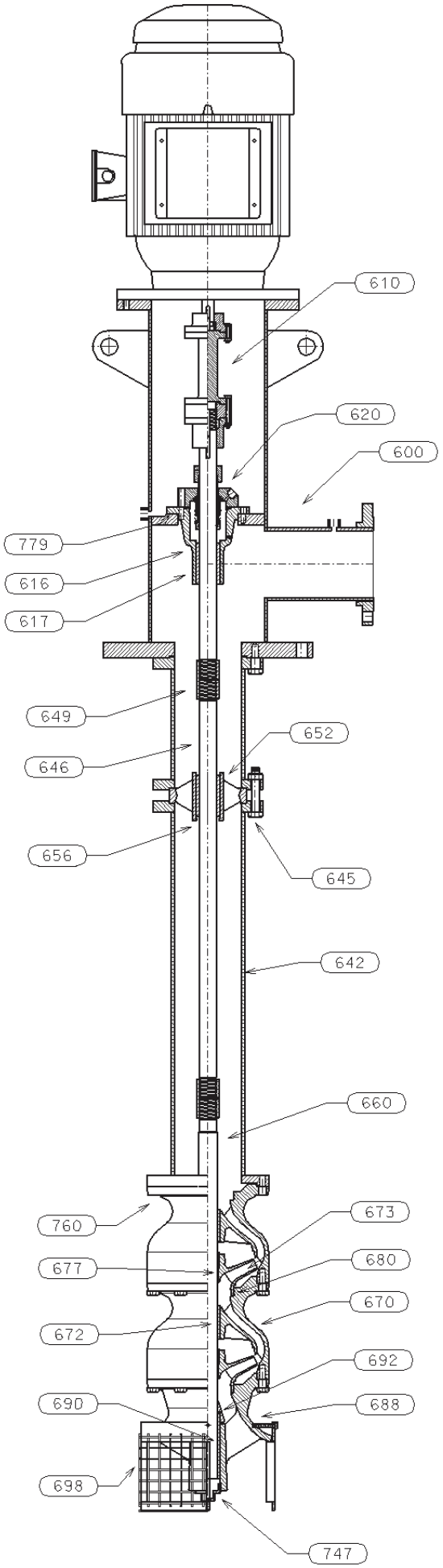


**DISCHARGE HEAD ASSEMBLY**

| ITEM | DESCRIPTION |
|---|---|
| 600 | DISCHARGE HEAD |
| 608 | HEADSHAFT |
| 610 | COUPLING ASSEMBLY |
| 616 | SEAL HOUSING |
| 617 | SEAL HOUSING BEARING |
| 620 | MECHANICAL SEAL |

**COLUMN ASSEMBLY**

| | |
|---|---|
| 642 | COLUMN PIPE |
| 645 | COLUMN BOLTING |
| 646 | LINESHAFT |
| 649 | LINESHAFT COUPLING |
| 652 | BEARING RETAINER |
| 656 | LINESHAFT BEARING |

**BOWL ASSEMBLY**

| | |
|---|---|
| 660 | BOWL SHAFT |
| 670 | INTERMEDIATE BOWL |
| 672 | INTERMEDIATE BOWL BEARING |
| 673 | IMPELLER |
| 677 | TAPERLOCK |
| 680 | WEAR RING (OPTIONAL) |
| 760 | HEX BOLT |
| 692 | SAND COLLAR |
| 688 | SUCTION BOWL/BELL |
| 690 | SUCTION BEARING |
| 698 | SUCTION STRAINER |
| 747 | PLUG |

***Figure 2*** **Open Lineshaft Pump with Flanged Column**

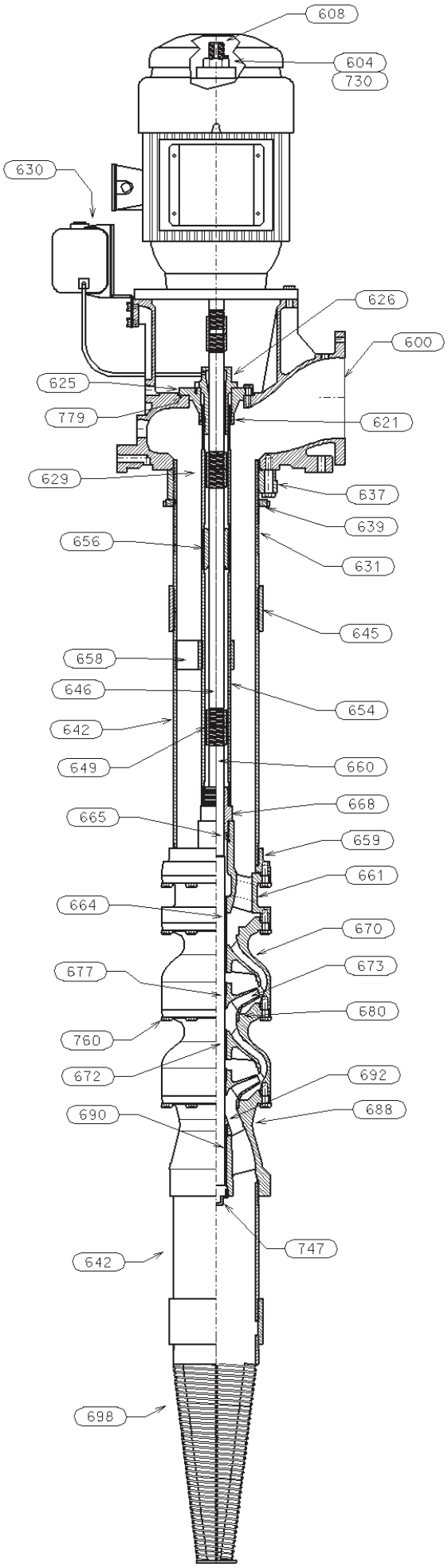


## HEAD ASSEMBLY

| ITEM | DESCRIPTION |
|---|---|
| 600 | DISCHARGE HEAD |
| 604 | ADJUSTING NUT |
| 608 | HEADSHAFT |
| 621 | O-RING |
| 625 | TENSION PLATE |
| 626 | TENSION NUT |
| 630 | OILER |
| 637 | COLUMN FLANGE |
| 730 | GIB KEY |
| 779 | TENSION PLATE GASKET |

## COLUMN ASSEMBLY

| | |
|---|---|
| 629 | TUBE NIPPLE |
| 631 | COLUMN NIPPLE |
| 639 | COLUMN LOCK RING |
| 642 | COLUMN PIPE |
| 645 | COLUMN COUPLING |
| 646 | LINESHAFT |
| 649 | LINESHAFT COUPLING |
| 654 | OIL TUBE |
| 656 | LINESHAFT BEARING |
| 658 | TUBE STABILIZER |

## BOWL ASSEMBLY

| | |
|---|---|
| 659 | COLUMN ADAPTER |
| 660 | BOWL SHAFT |
| 661 | DISCHARGE BOWL |
| 664 | DISCHARGE BEARING |
| 665 | OIL SEAL |
| 668 | TUBE ADAPTER BEARING |
| 670 | INTERMEDIATE BOWL |
| 672 | INTERMEDIATE BOWL BEARING |
| 673 | IMPELLER |
| 677 | TAPERLOCK |
| 680 | WEAR RING (OPTIONAL) |
| 688 | SUCTION BOWL/BELL |
| 690 | SUCTION BEARING |
| 692 | SAND COLLAR |
| 698 | SUCTION STRAINER |
| 747 | PLUG |
| 760 | HEX BOLT |

***Figure 3*** **Enclosed Lineshaft Pump with Threaded Column Pipe**

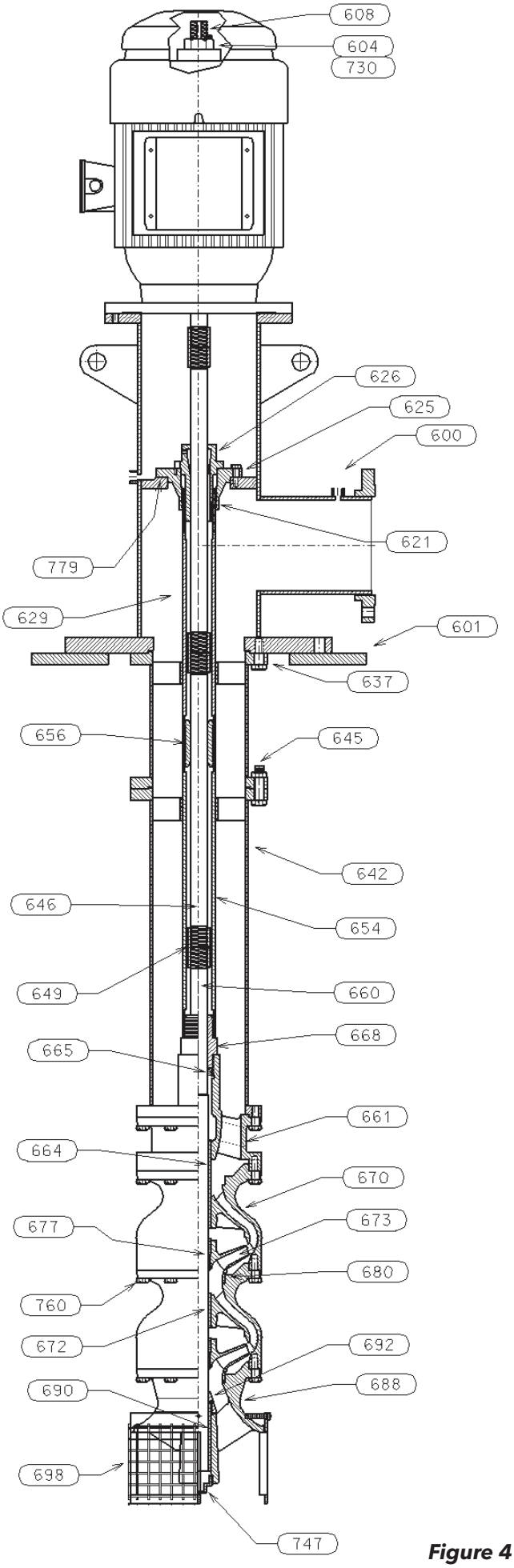


### HEAD ASSEMBLY

| ITEM | DESCRIPTION |
|---|---|
| 600 | DISCHARGE HEAD |
| 604 | ADJUSTING NUT |
| 608 | HEADSHAFT |
| 621 | O-RING |
| 625 | TENSION PLATE |
| 626 | TENSION NUT |
| 630 | OIL RESERVOIR |
| 637 | COLUMN FLANGE |
| 730 | GIB KEY |
| 779 | TENSION PLATE GASKET |

### COLUMN ASSEMBLY

| | |
|---|---|
| 629 | TUBE NIPPLE |
| 642 | COLUMN PIPE |
| 645 | COLUMN BOLTING |
| 646 | LINESHAFT |
| 649 | LINESHAFT COUPLING |
| 654 | OIL TUBE |
| 656 | LINESHAFT BEARING |
| 658 | TUBE STABLIZER |

### BOWL ASSEMBLY

| | |
|---|---|
| 660 | BOWL SHAFT |
| 661 | DISCHARGE BOWL |
| 664 | DISCHARGE BEARING |
| 665 | OIL SEAL |
| 668 | TUBE ADAPTER BEARING |
| 670 | INTERMEDIATE BOWL |
| 672 | INTERMEDIATE BOWL BEARING |
| 673 | IMPELLER |
| 677 | TAPERLOCK |
| 680 | WEAR RING (OPTIONAL) |
| 688 | SUCTION BOWL/BELL |
| 690 | SUCTION BEARING |
| 692 | SAND COLLAR |
| 698 | SUCTION STRAINER |
| 747 | PLUG |
| 760 | HEX BOLT |

***Figure 4*** **Enclosed Lineshaft Pump with Flanged Column**

## FOUNDATION AND PIPING

### SUB BASE (SOLE PLATE) INSPECTION

Sub base and sole plate are terms in common use to describe a general class of solid steel plates mounted in grout (or bolted to steel structures) at the pump-foundation interface.

1. Remove the sub base from the pump discharge head, when shipped assembled.

2. Completely clean the underside of the sub base. It is sometimes necessary to coat the underside of the sub base with an epoxy primer. (This is available as an option.)

3. Remove the rust preventative solution from the machined topside with an appropriate solution.

### SITE WITH CONCRETE FOUNDATION

1. A pump should have adequate space for operation, maintenance and inspection.

2. Sub base mounted pumps are normally grouted on a concrete foundation, which has been poured on a solid footing. The foundation must be able to absorb any vibration and to form a permanent, rigid support for the pumping unit.

3. The foundation must be of adequate strength to support the complete weight of the pump, plus the weight of the liquid passing through it. A typical installation will have bolts with a pipe sleeve 2½ times the bolt diameter embedded in the concrete.

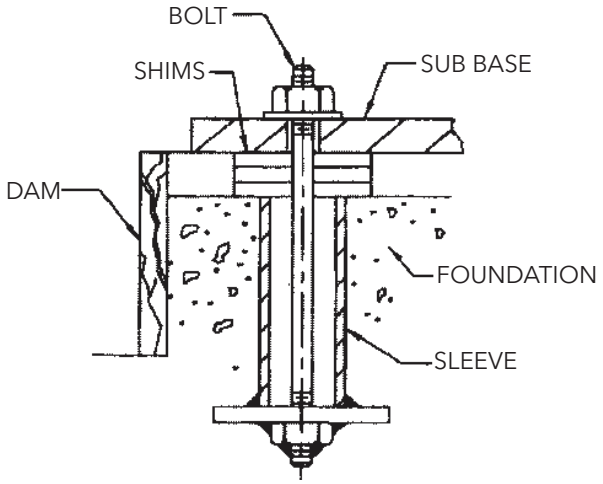


***Figure 5***

Bolts should be sized and located in accordance with the dimensions given on the Certified Pump Outline Drawing, if provided. The pipe sleeve allows movement for the final positioning of the foundation bolts to conform to the holes in the sub base flange. See Figure 5.

4. Remove water and/or debris from anchor bolt holes/ sleeves prior to grouting. If the sleeve type bolts are being used, fill the sleeves with packing or rags to prevent grout from entering.

5. Carefully lower the sub base onto the foundation bolts. Hand tighten the nuts.

6. Leveling the sub base may be done by several methods. Two common methods are:

   A. Using leveling wedges. This is shown in Figure 6.
   B. Leveling nuts on the anchor bolts.

   Regardless of the method, a machinist level must be used for leveling.

**NOTE: When using a machinist level, it is important that the surface being leveled is free of all contaminants, such as dust, to ensure an accurate reading.**

7. Level the sub base in two directions at 90 degrees on the machined surface. The levelness tolerance is 0.005 inches per foot for commercial, and 0.001 inches per foot for API.

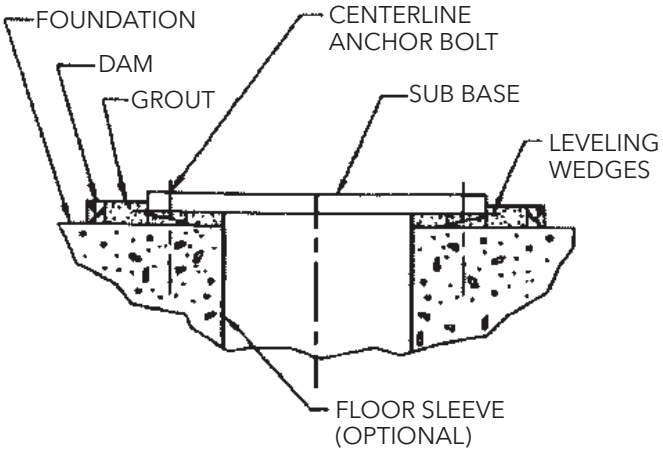


***Figure 6***

### SUB BASE GROUTING

1. Inspect foundation for dust, dirt, oil, chips, water, etc. and remove any contaminants. Do not use oil-based cleaners as grout will not bond to them. Refer to grout manufacturer's instructions.

2. Build dam around foundation (See Figure 6). Thoroughly wet foundation. Refer to grout manufacturer's instructions.

3. Pour grout between sub base and concrete foundation, up to level of dam. Remove air bubbles from grout as it is poured by puddling, using a vibrator, or pumping the grout into place. Non-shrink grout is recommended. Refer to grout manufacturer's instructions.

4. Allow grout to set at least 48 hours.

5. Tighten foundation bolts.

### PIPING

Guidelines for piping are given in the "Hydraulic Institute Standards", available from: Hydraulic Institute,

9 Sylvan Way, Parsippany, NJ 07054-3802 and must be reviewed prior to pump installation.

**⚠WARNING** *Never draw piping into place by forcing the flange connections of the pump. Pipe strain will adversely effect the operation of the pump resulting in damage to the equipment and possible physical injury.*

1. All piping must be supported independently of, and line up naturally with the pump flange so that undue pipe strain is not imposed on the pump.

2. **DO NOT** connect piping to pump until grout has hardened and pump hold-down bolts have been tightened.

3. It is suggested that expansion loops or joints, if used, be properly installed in the discharge line. When handling liquids at elevated temperatures expansion joints are used, so linear expansion of piping will not draw pumps out of alignment.

4. Carefully clean all pipe parts, valves and fittings, and piping branches prior to assembly.

5. Isolation and check valves should be installed in discharge line. Locate the check valve between isolation valve and pump, this will permit inspection of the check valve. The isolation valve is required for regulation of flow, and for inspection and maintenance of pump. The check valve prevents pump or seal damage due to reverse flow through the pump when the driver is turned off.

6. Increasers, if used, should be placed between pump and check valves.

7. Cushioning devices should be used to protect the pump from surges and water hammer if quick-closing valves are installed in the system.

## PUMP INSTALLATION

Pumps of 20 feet (6 meters) or less in length are usually shipped assembled, with the exception of the driver, mechanical seal with tubing and coupling assembly, spacer or non spacer type. When provided, refer to the Certified Pump Outline for the applicable base plate plan for the location of anchor bolt holes.

### INSTALLING AN ASSEMBLED PUMP

1. If a base plate was supplied, install as described in Foundation/Piping Section (page 11).

2. Clean the mounting surface of the plate and clean bottom surface of discharge head mounting flange.

3. Sling through discharge head holes or thread two eyebolts through bolt holes in the mounting flange and hoist unit into position over foundation. **NOTE: Eyebolts or sling should be rated to handle in excess of the pump weight (See Outline Drawing).**

4. Lower the unit and carefully guide it so that unit does not strike the side of the base plate. Continue to lower unit until the discharge head flange engages and rests firmly on the plate, then secure with capscrews provided.

5. **When a lineshaft is shipped separately check shaft for straightness; average total run out should not exceed 0.005" TIR (0.127mm) for 10 feet (3m). Shaft must be within tolerance prior to installation.**

6. Refer to remainder of this manual for complete assembly, startup, maintenance, disassembly and recommended lubricants for the pump.

### INSTALLING A PARTIALLY ASSEMBLED PUMP

**⚠WARNING** *Do not work under a heavy suspended object unless there is positive support and safe guards, which will protect personnel, should a hoist or sling fail.*

**⚠CAUTION** *Do not attempt to lift bowl assembly by the pump shaft. This can result in damaging the pump shaft.*

1. Prior to installing the bowl assembly, check that all capscrews are tight. Turn the pump shaft by hand and make sure it turns freely. Remove all accumulated dust, oil or other foreign material from the external surfaces.

2. Place two I-beam supports across the base plate opening, strong enough to safely support the weight of the entire pump assembly. These I-beams should be connected by threaded rods and nuts so as to clamp them firmly together to support the pump. (See Figure 7).

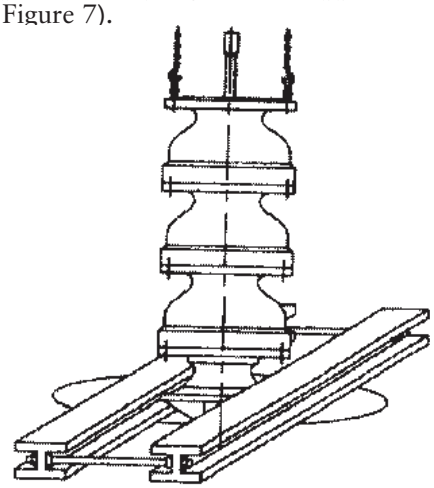

***Figure 7***

3. Place a suitable hoist or derrick over base plate opening with the hook in the center.

4. If a suction strainer is provided, assemble it to the suction bell (or suction bowl).

5. Place the elevator clamps just below the discharge bowl. For flanged column install two threaded eyebolts through the discharge bowl bolt holes 180° apart for flanged column. For threaded discharge utilize a lifting bail sized to handle the weight of the bowl assembly and suction apparatus.

6. Attach a sling to the elevator clamps, eyebolts, or lifting bail and hoist it into position over the foundation opening. (See Figure 7).

7. Carefully lower bowl assembly, guiding the unit so it does not strike the sides of the opening. Continue to lower bowl assembly until the elevator clamps or discharge bowl flange rests firmly on the I-beam supports.

8. Place a cover over the discharge bowl opening to prevent entrance of dirt or other foreign matter until ready for installation of the column assembly.

**⚠CAUTION** ***Do not drop any foreign object into the bowl assembly. Such an object can cause serious damage to the pump and any downstream components. Any foreign object dropped into the bowl assembly must be retrieved prior to continuing assembly.***

## COLUMN

### OPEN LINESHAFT

Lineshafts are coupled with threaded or keyed couplings. Column pipe may be threaded or flanged. When provided, see the Certified Pump Outline Drawing for the number of column and shaft sections required. The top and bottom sections may be special lengths:

1. **Check the lineshaft (646) for straightness. Average total runout should be less than 0.0005" TIR per foot, not to exceed 0.005" T.I.R. for every 10 feet of shafting.**

**⚠CAUTION** **Bottom section of column pipe should not be longer than 5 feet.**

2. Hoist the first piece of lineshaft over the bowl assembly. Lower the lineshaft until the bottom end is properly aligned with the coupling of the pump shaft. Apply a thin film of oil to the threads on the lineshaft (646) and the coupling (649) (for non-galling material, or Molykote if galling material).

**⚠CAUTION** ***Use "MOLYKOTE" Dow Corning or equal for all galling material such as 316 stainless steel.***

3a. With lineshaft in the proper position on the coupling, screw lineshaft into the coupling manually until resistance is felt. A fine wire inserted in the hole at the center of the coupling can be used as a gage to determine when the coupling is correctly positioned on the shaft. **Remove the wire after installing the shaft.** Completely tighten the joint by using a pair of pipe wrenches. Use care not to damage any bearing journal areas on the shaft. *NOTE: Shaft threads are left-handed.*

**⚠CAUTION** ***Make up threaded joints manually to verify that the threads are properly engaged prior to applying a wrench. If cross-threading occurs, break the joint and repair the threads. If the threads are beyond repair, replace the damaged part.***

3b.

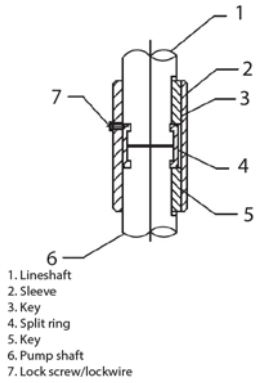


With a keyed coupling insert the key into the pump shaft. Lower the sleeve over the pump shaft, to approximately 1.0 in (25.4 mm) below the top of the shaft. Then lower the lineshaft until it touches the pump shaft. Insert the split ring into the grooves of the pump shaft and lineshaft. Raise the sleeve until it covers the split ring, then insert the key into the lineshaft. Raise the sleeve to the top of the key and secure the sleeve to the split ring with a lock screw and lock wire.

4. For threaded column, secure a friction clamp immediately below the column coupling. Hoist column section over bowl assembly. Lower column over lineshaft until column pipe engages the discharge bowl. Manually screw the column into discharge bowl. Complete joint by tightening column with chain tongs until the end of the column butts firmly against discharge bowl.

5. For flanged column, install two eyebolts diametrically opposite the upper flange of the bottom column. Attach a sling to the eyebolts and to the hoist hook. Lower column section until the flange engages the flanged top bowl register. Insert as many bolts through both flanges as possible. Lift column assembly high enough to allow rotation of the supports. Install and tighten remaining capscrews gradually in diametrically opposite pairs until all are uniformly tightened.

6. Lift the assembly and remove the elevator clamp or supports and slowly lower the bowl and the column assembly. Place supports on the base plate and continue to lower the assembly until the column elevator clamps or column flange comes to rest on the supports. Place an elevator clamp under the column pipe and allow it to butt firmly against the column pipe coupling.

7. Place the bearing retainer over the shaft and locate it in the column coupling recess. Make sure the end faces of the column pipe are clean. For flanged columns, fit the retainer in the female register of the flange. Make sure the contact faces in the flanges are clean.

8. Check that the shaft is approximately centered in the bearing. Move the shaft around slightly so as to center it in its bearing. Only a slight amount of force should be required. **If an excessive amount of force is required, the pipe or shaft may not be butted properly or the shaft may be bent.** In any case, the problem must be corrected prior to proceeding further.

9. Repeat the preceding procedures until all column sections required have been installed.

10. Install the top shaft or stub shaft and coupling. If the pump is equipped with column adjusting nipple, install it with longer threaded end upward. Screw the lock ring on to the nipple until you reach the end of the thread.

**⚠CAUTION** ***Do not drop any foreign object into the column assembly. Such an object can cause serious damage to the pump and any downstream components. Any foreign object dropped into the column assembly must be retrieved prior to continuing assembly.***

ENCLOSED LINESHAFT

1. Insert tube (654) and shaft (646) sections into column section.
2. Place an elevator clamp near top of column just below and butt firmly against column pipe coupling (645). For flanged columns, place the elevator clamp just below the flange.
3. Attach a sling to hoist hook. Attach bottom of shaft (646) to column (644), by tying a tail rope to deep-throated clamp attached to bottom of column. (See Figure 8). Tie a clove hitch or double half hitch around the enclosing tube and then around the shaft in threaded area. Figure 8 also shows the alternate method (dotted lines).

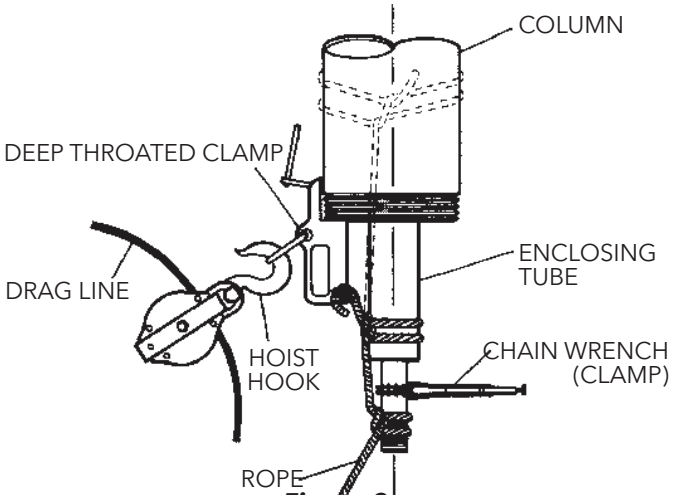

***Figure 8***

4. Utilize the remaining tail rope to keep tension on the knots during hoisting. Lower end of column section shall be guided by a drag line which is pulled by the hoist. A traveling block for the drag-line shall be attached to a deep-throated clamp, which is secured to bottom of the column threads.
5. Hoist column section over pump, keeping tension on tail rope. With column in a vertical position, remove drag-line and traveling block, lower column until bottom line shaft is properly aligned with pump shaft coupling.
6. Apply a thin film of oil to the threads on the lineshaft (646) and the coupling (649) (for non-galling material or Molykote if galling material).

**⚠CAUTION** ***Use "MOLYKOTE" Dow Corning or equal for all galling material such as 316 stainless steel.***

7. With lineshaft in proper position on the coupling, remove tail rope and screw lineshaft into coupling until resistance is felt. A fine wire inserted in the hole at the center of the coupling can be used as a gage to determine when the coupling is correctly positioned on the shaft. **Remove the wire after installing the shaft.** Completely tighten the joint by using a pair of pipe wrenches. Use care not to damage any bearing journal areas of the shaft. *NOTE: Shaft threads are left-handed.*

**⚠CAUTION** ***Make up threaded joints manually to verify that the threads are properly engaged prior to applying a wrench. If cross-threading occurs, break the joint and repair the threads. If the threads are beyond repair, replace the damaged part.***

8. Carefully lower column section until lower end of the tube section rests on the adapter bearing (668). **The end faces of the tube should be clean and free of nicks.** Remove tail rope, clean outside of the adapter bearing and lubricate with thread compound. Screw tube section onto adapter bushing manually, until resistance is felt. Complete tube joint by utilizing a pair of pipe wrenches or chain tongs, butting the end of tube against the upper end of the tube adapter bearing.
9. Clean column threads and lubricate with thread compound.
10. Lower column until column pipe engages in the discharge bowl. Manually thread the column into discharge bowl. Complete joint by tightening column, utilizing chain tongs until the end of the column butts firmly against discharge bowl.
11. Lift the pump assembly and remove elevator clamp secured to discharge bowl. Slowly lower assembly into well or sump until elevator clamp gently comes to rest on timbers or I-beam supports and remove the sling.
12. Remove the exposed lineshaft bearing, pour oil into the tubing and reinstall the bearing. The amount of oil to be poured is given in the following table:

| Tube Size | Amount of oil per section | |
|---|---|---|
| | 10 ft. Sections | 20 ft. Sections |
| 1¼, 1½, 2 | ½ Cup | 1 Cup |
| 2½, 3, 3½ | 1 Cup | ½ Qt. |
| 4 and larger | ½ Qt. | 1 Qt. |

*See page 27 for recommended oil.*

13. Repeat the preceding procedures. Throughout the column assembly, install tube stabilizer (658) over the enclosing tube (654) every 40 feet. The last one should be less than 20 feet below the bottom of the discharge head. Use soapy water as lubricant when sliding the stabilizer over the tube.
14. Continue the procedure until all column sections for the proper setting have been installed, excluding the column adjusting nipple (631) and tube nipple (629), if provided.
15. Install the top shaft or stub shaft and coupling.

**⚠CAUTION** ***Do not drop any foreign object into the bowl assembly. Such an object can cause serious damage to the pump and any downstream components. Any foreign object dropped into the bowl assembly must be retrieved prior to continuing assembly.***

## INSTALLING THE DISCHARGE HEAD

VIT Pumps are provided with either a cast iron or fabricated steel type head. For pump with below ground discharge, a motor stand is provided instead the discharge head. Install the discharge head as follows:

1. If the stuffing box (See Fig. 9) or tension nut (See Fig. 10) is assembled to the head, remove it and all the attached piping.
2. For threaded column, **check to be sure that the column flange (637) is securely attached to the bottom of the discharge head. Check and tighten the capscrews** (or socket head screw) gradually in diametrically opposite pairs.
3. Remove coupling guard if provided. Attach a sling to the lifting lugs on the side of the discharge head through windows and hoist discharge head over the protruding top shaft (or stub shaft).

**⚠CAUTION** ***Do not bump or scrape the shaft protruding above the column. This could result in bending or damaging the shaft.***

4. Orient the discharge head in the required position and lower the head. Center the vertical hole with the top shaft protruding above the column. For threaded column, continue to lower the discharge head until the large threaded hole in the bottom of the discharge head rests squarely on top of column. Clean the threads at upper end of column assembly and lubricate with thread compound. Rotate discharge head, screw it onto the column, for short set-pump, (without the column adjusting nipple) butting the top of column tightly against the discharge head.
5. For flanged column, continue to lower the discharge head until the discharge head engages the column flange. Install capscrews and secure discharge head to the column flange. Tighten capscrews gradually in diametrically opposite pairs. Lift the pump assembly high enough to allow rotation of the supports. Realign and lower assembly. Install and tighten remaining capscrews. Repeat the rotating and the tightening procedure until all capscrews are uniformly tight.
6. Hoist the discharge head by lifting lug and remove the elevator clamp attached to column.
7. Remove the support timbers or I-beams and clean the top of foundation or base plate. Orient the discharge head in the required position.

**NOTE: Sling should be rated to handle in excess of the pump weight.**

8. Lower bowl, column and head assembly, until discharge head mounting flange engages base plate. Secure discharge head to the foundation or base plate. Check the levelness of the discharge head in all directions, utilizing a machinist level across the driver's mounting surface of the discharge head.
9. Check whether the top shaft (or stub shaft) is in the center of the stuffing box bore. If not, the shaft must be centered by shimming the head base and the sub base (or the foundation).
10. Rotate the shaft approximately 90°. Check again whether the shaft is at the center of the stuffing box bore or not. If not, either the top shaft is bent or the first shaft below it did not butt properly. Correction must be made before the installation procedures can proceed.

## INSTALLING THE STUFFING BOX

Assemble stuffing box as shown in Figure 9.

1. Clean the surface of the discharge head where the stuffing box will be mounted and remove any nicks or burrs with a fine flat file. Position gasket on surface. Slide stuffing box (616) down over headshaft and into position on the gasket. Secure stuffing box with capscrews. Make sure the capscrews are torqued equally to prevent misalignment.
2. Grease the packing ring (620) for easier installation.
3. Twist the packing ring sideways to get it around the shaft easily. Start the first ring into the stuffing box. When the entire ring is worked in using the fingers, tamp it down using a split wood bushing (or equal) and push the packing ring down firmly. It must seal on the shaft and bore of the stuffing box. Install all three (3) rings in this manner. Stagger ring joints 90° apart. The split gland may be used as a tamper for the top ring.
4. Insert lantern ring (622) into stuffing box. Be sure it is properly positioned so that it aligns with the lubrication passage in the stuffing box.
5. Insert three (3) additional rings of packing. Stagger ring joint 90° apart.
6. Install the split gland and screw nuts on the split gland studs. Tighten nuts then relieve the nuts and tighten finger tight.

**⚠CAUTION** ***Check that the split gland is square in the stuffing box. Cocking can cause uneven compression of packing and damage to the shaft or sleeve and heat up the shaft and stuffing box.***

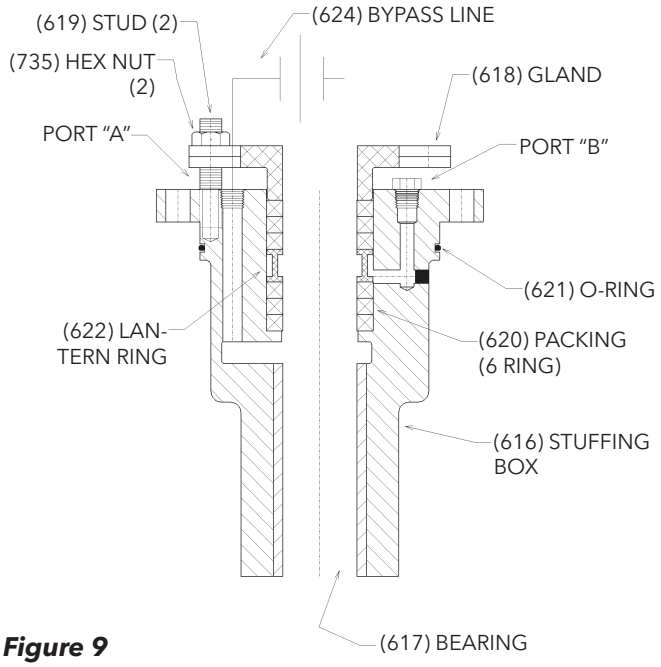


***Figure 9***

7. The stuffing box is shipped with both ports plugged. If the discharge pressure is over 100 psi, remove the plug on Port "A" and attach a bypass (relief) line. If the discharge pressure is over 200 psi, remove the plug on Port "B" and attach another bypass line.
8. Final adjustment of the stuffing box must be made at pump start up. A properly packed stuffing box should be loose enough to allow the shaft to be turned manually. Also, packing must allow leak. See page 24, Pump Start Up #5.

**⚠CAUTION** ***Do not over tighten packing or excessive wear can occur on the shaft or sleeve.***

## INSTALLING THE MECHANICAL SEAL

Vertical turbine pumps are usually supplied with cartridge type mechanical seals, shipped assembled - ready for installation, when mechanical seals are supplied. Instructions for installing mechanical seals are provided by the seal manufacturer. **Consult the seal manufacturer's instructions (furnished with the seal) for information on the type of seal used**. Additionally, refer to factory furnished outline drawing and seal piping schematic on complex seal piping arrangements.

### GENERAL REQUIREMENTS FOR INSTALL SEALS

1. Check surfaces at the face of the seal housing and at the bottom of the seal housing to insure that they are clean, flat and free of burrs. The face surface must be smooth to form a good sealing surface for a gasket or O-ring.
2. Check that shaft is smooth, and free of burrs, nicks and sharp corners that could nick or cut the O-ring or shaft packing. When further clean up is required, protect by covering the inside of the pump seal housing. Remove burrs, nicks and sharp corners by using a strip of emery cloth over the shaft threads. File threads around the keyway with a smooth mill file or emery cloth. Sharp edges must be rounded.
3. Remove all chips and dust from the shaft area.
4. Check that all rotary unit parts of the seal fit over the shaft. A pre-check may be made by removing the O-ring(s) from the cartridge sleeve Inside Diameter (ID) and then installing the seal on the shaft. Further shaft clean up will be necessary when the seal will not pass all the way into the seal housing.
5. Remove the seal after the pre-check and re-install the sleeve O-ring(s).
6. Sparingly lubricate the shaft and sleeve ID with the lubricant included with the mechanical seal or recommended by the mechanical seal manufacturer. The following lubricants may be used, for water service, when no lubricant is supplied or recommended by the mechanical seal manufacturer.
   - Light oil (SAE #10 or 20)
   - Dow Corning #4 Grease
   - Silicone lubricant
   - Wax or Clay
   - Soapy water

   Oil based lubricants will damage EPR / EPDM elastomer O-rings. Silicone lube and soapy water are safe for EPR / EPDM elastomer O-rings.
7. Install the O-ring or gasket, between the seal housing and seal. Install the seal over the shaft and ease it into position against the face of the seal box. Take care when passing the sleeve and O-ring over keyways or threads to avoid damaging the O-ring.

**⚠CAUTION** ***Do not bump carbon members against The shaft as they may chip, crack or break.***

8. Position seal gland on discharge head seal housing and secure with capscrews (or nuts for studs) provided. Tighten capscrews gradually and uniformly in a criss-cross pattern, taking 2 or 3 passes.

**⚠CAUTION** ***Do not over tighten capscrews on gland. This can distort seal seat and cause seal failure.***

9. Install all seal piping as required. Prior to making final connections of sealing liquid pressurizing lines, make sure the seal housing and all sealing liquid lines are flushed free of dirt, scale and other particles that would be abrasive to the sealing faces.
10. The Driver and Coupling must now be installed per instruction. (See page 24 - INSTALLING THE HOLLOW SHAFT DRIVER or page 26 - INSTALLING THE SOLID SHAFT DRIVER).

## MECHANICAL SEAL ALIGNMENT

### CONCENTRICITY OF MOTOR SHAFT

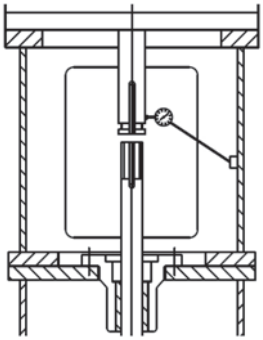

1. Install the dial indicator as shown, with the base attached to the motor support.
2. Rotate the motor shaft by hand while you read the dial.
3. Make sure that the runout does not exceed NEMA standards, 0.002 in (0.05 mm) maximum TIR.
4. If the indicator reads higher than 0.002 in (0.05 mm)TIR, loosen the four motor hold-down bolts and relocate the motor on the motor base register.
5. Obtain the desired position.
6. Tighten the hold-down bolts and repeat the indicator reading.

   Note: Adding or removing shims between the motor and the discharge head helps alignment in the vertical direction. The motor may also have to be adjusted in the horizontal direction for alignment.

### FLATNESS OF THE SEAL HOUSING

For this measurement, remove the mechanical seal if the dial indicator stylus cannot rotate 360° on the top surface of the seal gland.

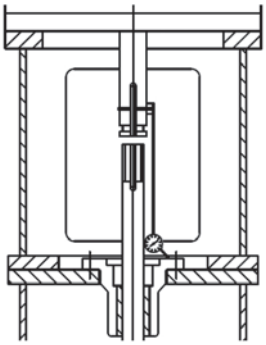

1. Install the dial indicator as shown, with the base 1) Remove the lower coupling components and attach the base of the dial indicator to the motor shaft.
2. Place the stylus at the top surface of the seal gland, or at the top surface of the seal housing.
3. Slowly rotate the motor shaft 360°.
4. Check that the face of the seal housing is square with the shaft to within 0.002 in (0.05 mm) TIR.

### CONCENTRICITY OF THE SEAL HOUSING

This measurement requires that you remove the mechanical seal.

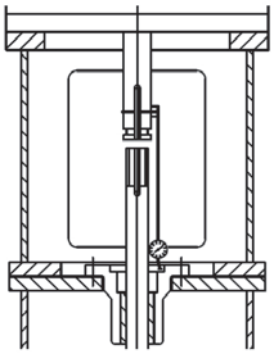

1. Install the dial indicator as shown.
2. Rotate the motor shaft by hand and run the indicator in the inside-machined surface of the seal housing in order to determine the concentricity.
3. If the indicator reads higher than 0.004 in (0.10 mm) TIR, loosen the four motor hold-down bolts and relocate the motor on the motor base register.
4. Obtain the desired position.
5. Tighten the hold-down bolts and repeat the indicator reading.

### CONCENTRICITY OF THE HEADSHAFT

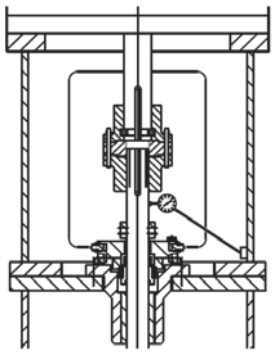

1. Reinstall the mechanical seal if it was removed for the flatness or concentricity measurement.
2. Install the coupling assembly and adjust the impeller.
3. Attach the base of the dial indicator on the discharge head or motor support.
4. Place the stylus on the shaft between the top of the seal and the bottom of the pump coupling.
5. Slowly rotate the motor shaft 360°.
6. Check that the shaft runout is within 0.004 in (0.10 mm) TIR, or as required by specification.
7. Drill and dowel the pin in three places in order to secure the motor to the motor base after you obtain the required runouts.

### CONCENTRICITY OF MOTOR SHAFT USING JACKSCREWS

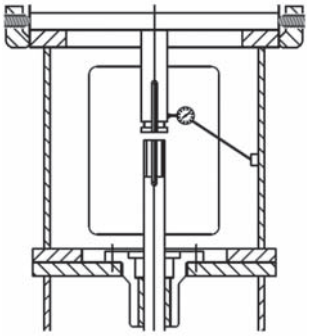

1. Install the dial indicator as shown, with the base attached to the motor support.
2. Rotate the motor shaft by hand while you read the dial.
3. Make sure that the runout does not exceed NEMA standards, 0.002 in (0.05 mm) maximum TIR.
4. If the indicator reads higher than 0.002 in (0.05 mm) TIR, using the jackscrews relocate the motor on the motor base (sometimes no register).
5. Obtain the desired position.
6. Tighten the hold-down bolts (not the jackscrews) and repeat the indicator reading.

   Note: Adding or removing shims between the motor and the discharge head helps alignment in the vertical direction. The jackscrews are provided to adjust the motor in the horizontal direction for alignment.

## INSTALLING THE TENSION PLATE WITH CAST IRON TENSION NUT

### INSTALLING THE TUBE TENSION PLATE

1. (See Figure 10). Lubricate tube threads and underside of tension plate flange with thread compound. Thread the tension plate (625) onto the enclosing tube nipple (629) manually until its shoulder rests on the discharge head.

### TENSIONING THE ENCLOSING TUBE

The enclosing tube sags from its own weight as it is installed and must be pulled tight (tensioned) to make it straight. This section describes two methods of tensioning the tube. The direct pull method is more precise and is preferred. The second method--the wrenching method--is given as an alternate.

*NOTE: The correct tension is equal to the weight of the enclosing tube plus 10%.*

Weights per unit length for each tube size are given in the Table 1. Multiply by total length of the tube to determine the total weight.

**TABLE 1 – Weight-per-foot of Enclosing Tubing**

| TUBE SIZE (INCH) | WEIGHT PER FOOT (LB.) |
|---|---|
| 1¼ | 2.99 |
| 1½ | 3.63 |
| 2 | 5.02 |
| 2½ | 7.66 |
| 3 | 10.25 |
| 3½ | 12.50 |
| 4 | 14.98 |
| 5 | 20.78 |
| 6 | 28.57 |

## DIRECT PULL METHOD

1. The upper end of the tube may be pulled by the hoist to obtain the predetermined tension value. This requires the use of a dynamometer scale and an adapter fitting to grip the tube. TUBE TENSION ADAPTER AVAILABLE THROUGH FACTORY. With the tension plate installed manually but not tightened, thread the special fitting onto the top of the tube to full engagement. Attach the dynamometer scale to the fitting, and connect the upper end of the scale to the hoist hook. Operate the hoist hook to apply the required tension. This should pull the tension plate off the discharge head. Manually thread the tension plate to reset it. Release tension, remove dynamometer scale and special fitting.

## WRENCHING METHOD

1. If a dynamometer is not available, the tube can be tensioned by wrenching the tube tension plate. Make up a spanner wrench to straddle the projecting threaded tube end and to engage the tube tension plate capscrew holes by two lugs. Torque the tension plate to take all the slack out of the shaft tubing and induce a reasonable amount of tension by turning the tension plate counterclockwise. For tubing 2½" (63.5mm) and larger, an individual's full strength on a 3 foot (915mm) lever arm is sufficient. For smaller sizes, less pull must be exercised.

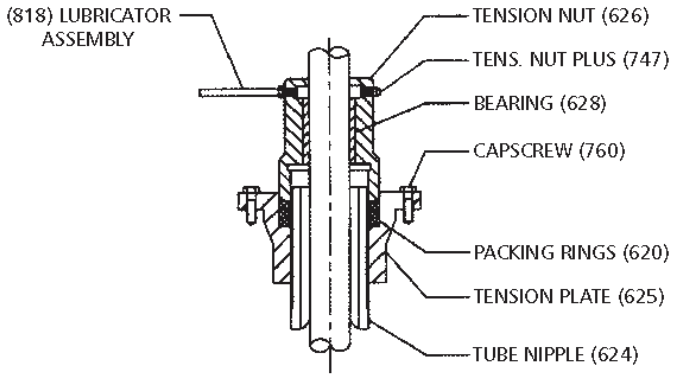


TENSION PLATE
OIL LUBE

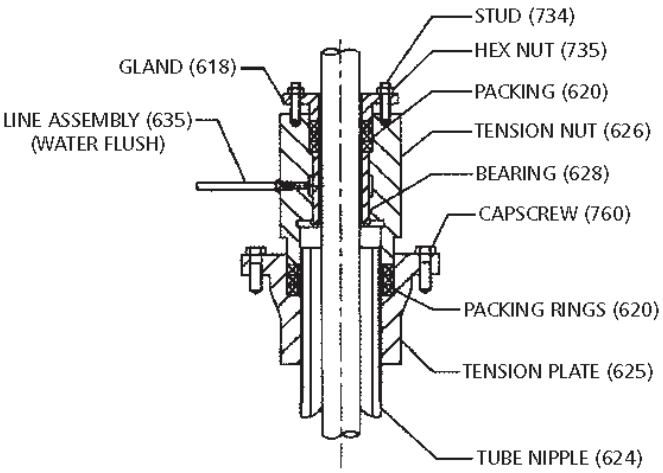


TENSION PLATE
WATER FLUSH

***Figure 10***

*NOTE: Do not turn clockwise to align holes in tension plate and discharge head.*

## INSTALLING TENSION NUT

1. (See Figure 10). Install capscrews (760) in the tension plate. Pour one pint of oil down the oil tube. **Note: Factory assembled unit has no oil in it. Oil must added in the field.**
2. Install packing (620) in the tension plate and thread the tension nut (626), tightening it firmly against the packing.
3. If a packed type tension nut (626) is used (for water flush), install packing (620), packing gland (618) and secure with stud (734) and nut (735). Screw nut finger tight. Install line assembly (635) and connect to flush liquid supply (see Figure 10).

**⚠CAUTION** ***Be sure that the top of the enclosing tube does not interference with the tension nut.***

4. If the top of the tube interferes with the tension nut, determine the distance, if the tube is too long or too short. If the tube is too short, it must be replaced with a longer tube of the correct length. If the tube is too long, it must be cut to the correct length and re-threaded. Reinstall and re-level pump.

## LUBRICATION SYSTEM

1. Connect solenoid valve (if provided), oil lines, and fill the oil reservoir with oil.
2. Check the lubricator feed and see that the oil reservoir is flowing freely. (In the case of a solenoid valve, temporary power connections are required.) Set the proper drops per minute on the regulator. Table 2 shows recommended regulator setting.

**TABLE 2 – Regulator Setting**

| Shaft Size (in.) | Basic drops per minute | Additional drops per minute per 100 ft. setting |
|---|---|---|
| 0.75 - 1.18 | 5 | 2 |
| 1.50 - 1.68 | 7 | 3 |
| 1.94 - 2.43 | 10 | 4 |
| 2.68 and larger | 12 | 5 |

## INSTALLING THE TENSION PLATE WITH BRONZE TENSION NUT

Assemble Tension Plate Assembly as shown in Figure 11.

1. Remove the lock bolt (636) and o-ring (621). Thoroughly clean the tension plate (625) include the o-ring groove. Lightly grease the o-ring and re-install it.
2. Clean the surface of the discharge head where the tension plate will be mounted and remove any nicks or burrs with a fine flat file. Clean the O.D. of the tube nipple. Carefully install the tension plate and gasket (779). Evenly tighten the mounting capscrews (759F).
3. Pour one pint of recommended oil down the tube nipple (629). (See page 27 for recommended lubricants.) **Note: Factory assembled unit has no oil in it. Oil must be added in the field.**

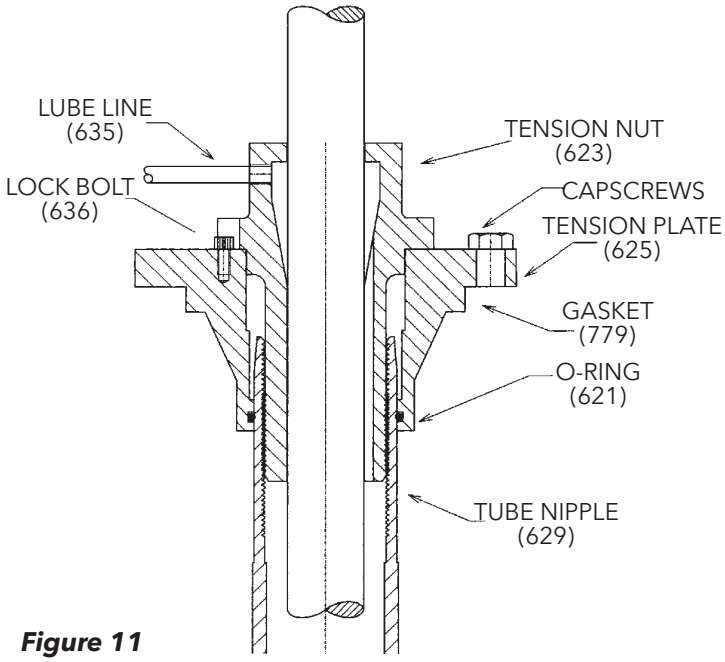


***Figure 11***

4. Clean the tension nut (623) and lightly oil its bore and the threads. Screw the tension nut into the tube nipple until the flange face of the nut contact the tension plate.
5. For setting less than 100 feet, tighten the tension nut until a slot aligns with the nearest locking position. Install the locking bolt.

## INSTALLING THE DRIVER

### INSTALLATION OF A HOLLOW SHAFT DRIVER

This refers to either VHS type electric motors or hollow shaft type gear drives. A small paragraph will be devoted to combination electric motor and right angle gear drives.

**⚠WARNING** ***Do not work under a heavy suspended object unless there is a positive support and safe guards which will protect personnel should a hoist or sling fail.***

1. The driving mechanism of all hollow shaft driver is shown on Figure 12. The head shaft (608) extends up through the quill or hollow shaft of the driver and is held in place by an adjusting nut (604), which not only carries all the static and hydraulic thrust of the impellers and shaft, but also provides the adjustment for the impeller clearances. The head shaft is connected to top shaft (or stub shaft) by a threaded coupling or a rigid flange coupling.
2. When a motor stand is furnished and not installed, proceed as follows:
   A. Hoist the motor stand, inspect the mounting surfaces, register and clean these surfaces thoroughly.
   B. Install the motor stand on discharge head and secure with capscrews provided.
3. Attach a sling to the lifting lugs of driver and hoist the driver up. Inspect the mounting surface, register and clean these surfaces thoroughly. If any burrs are found, remove burrs with a smooth mill file, cleaning thoroughly afterward.
4. For motor, orient the motor conduit box in the required position. For the right angle gear, orient the input shaft to the desired position. Align the driver mounting holes with the mating tapped holes on the discharge head. Lower the driver until the registers engage and the driver rests on the discharge head. Secure driver with capscrews provided.
5. Lubricate the driver bearings in accordance with instructions given on lubrication plate attached to the driver case (or in the motor IOM).

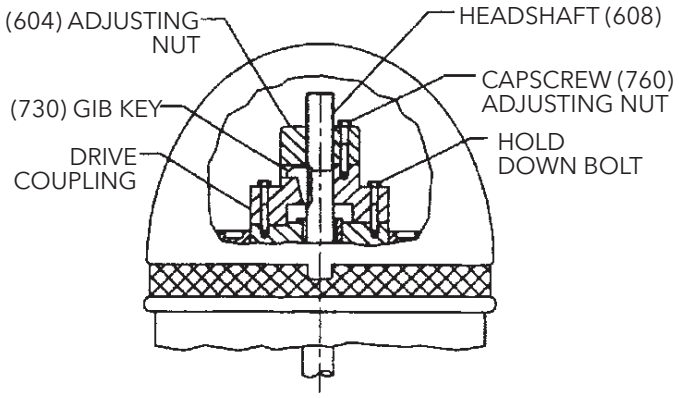


***Figure 12***

6. After lowering and orienting the driver as explained above, remove the drive coupling and the hold down bolts (See Figure 12). **Be sure to mark the location of the coupling before removing it.**
7. Lower the head shaft through the motor quill shaft to meet the shaft coupling. Apply a thin film of oil to head shaft threads (if non-galling material) and screw into the shaft coupling (located above the stuffing box). Make sure the shaft is not damaged in any way. Tighten the joint.
8. Check that the head shaft centers inside the driver quill shaft within 0.06” (1.5 mm). If it does not, misalignment is indicated.
9. Any head shaft misalignment with driver quill shaft could be caused by a bent headshaft, burrs, or foreign matter between shaft ends or any of the mounting flanges: motor flange to discharge head top flange, discharge head base flange to base plate or the base plate itself could be out of level. If the latter, shimming between base plate and discharge head base, will correct it. Also, check concentricity of motor to motor-stand (if provided) to discharge head.
10. With the motor in place and the head shaft projecting through the motor quill shaft, make temporary electrical connection to check the motor rotation. **(Be sure to remove the ratchet pins or balls before checking motor rotation.)** Motor must rotate counter-clockwise when viewed from the top. See arrow on pump name plate. If motor does not rotate counter-clockwise, you can change the rotation by interchanging any two leads. (For three phase only. For single phase motors see motor manufacturer’s instructions.)

**⚠CAUTION** ***Never check motor rotation with the drive coupling in place. The bore clearance between the drive coupling and the pump shaft O. D. is so close that should the motor spin with this shaft stationary, galling and locking together is very likely to take place.***

11. Install motor drive coupling. **(Be sure to line up the match mark made at step 6.)** Inserting the ratchet pins if a non-reverse ratchet is used. Match the coupling lugs with corresponding holes in motor. Tighten hold down bolts evenly, making sure driver coupling is properly seated in the register fit.
12. Fit gib key (730) into keyway, by filing if necessary, to where there is a snug but sliding fit. This key must be able to be removed by gentle leverage with a screwdriver under it.
13. Be careful that the gib key (730) is not too high so as to hold up the adjusting nut (604) from seating on the drive coupling. If it is, cut off some length of the key.
14. Install adjusting nut (604) to hand tight.

**COMBINATION ENGINE AND MOTOR DRIVES**

1. On combination drivers, the motor is invariably on top with a projecting head shaft extension.
2. Follow all procedures outlined in the previous paragraph, except that the motor must be lowered over this extended head shaft and great care must be taken to center it exactly so as not to bump or mis-align the shaft while the motor is being lowered into place.
3. There are several methods of running engines without electric motors and vice versa, requiring simple adjustment to the combination drive, but they are too numerous to mention here and can be obtained from the gear manufacturers instructions included with the shipment.

**IMPELLER ADJUSTMENT FOR ALL HOLLOW SHAFT DRIVERS**

**NOTE: Shaft adjustment up or down is accomplished by turning the adjusting nut (604) Figure 13.**

**NOTE: There are five holes in the adjusting nut and only four in the motor coupling. See Figure 13.**

1. With shafting all the way down and the impellers resting on their seats, turn the adjusting nut (604) in counter-clockwise direction, thus lifting the shaft, until the impellers just clear their seats and the shaft/motor turns free by hand. This removes all deflection from the shaft.
2. **If pump setting is 200 ft. or less,** make another two turns on the adjusting nut for the first 100 ft. (3 turns for 12 thread/inch shaft). Line-up one of the holes in the adjusting nut with the nearest hole in the driver coupling. Insert the capscrew in the hole and tighten it.

**NOTE: 1.00" and 1.18" diameter shafts are 12 thread per inch (tpi), 1.50" through 2.44" are 10 tpi, all larger sizes are 8 tpi.**

3. **For pump setting over 200 ft. see IOM for DWT.**

**FOR OPEN IMPELLERS**

1. With shafting all the way down and the impellers resting on their seats, turn the adjusting nut (604) in counter-clockwise direction, thus lifting the shaft, until the impellers just clear their seats and the shaft/motor turns free by hand. This removes all deflection from the shaft.
2. Align hole "A" in the adjusting nut (604) and hole "C" in the driver coupling (See Figure13) or whatever similar holes are in like position. If care is exercised, this will give an initial impeller clearance of 0.001" to 0.003" depending on shaft size or the pitch of the thread.
3. Insert capscrew into hole "B" provided these are the nearest matching holes for counter-clockwise rotation of adjusting nut, turn adjusting nut counter-clockwise until holes "B" and "D" line up. This gives 1/20 of a turn which is 0.004" on 12 tpi shaft or 0.005" on 10 tpi shaft.
4. Normal impeller clearance for the open impeller is consider to be 0.015" for the first 10 ft of the column length and 0.010" additional clearance for each 10 ft of length thereafter. This can be reduced in some instances where is necessary, but should not be attempted without consulting the factory or factory serviceman if present.

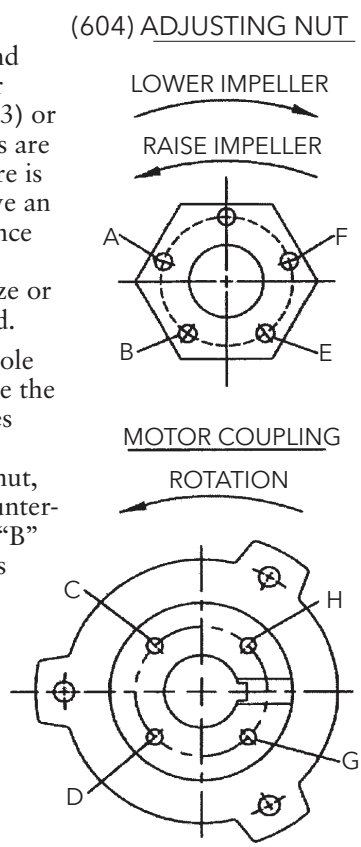

***Figure 13***

**INSTALLATION OF A SOLID SHAFT DRIVER**

**NOTE: When pump is supplied with an oil lubricated thrust pot, do not secure driver to discharge head until after the thrust pot and flexible coupling are installed. (See page 22 for thrust pot installation instruction.)**

**⚠WARNING** ***Do not work under a heavy suspended object unless there is a positive support and safe guard which will protect personnel should a hoist or sling fail.***

The coupling between the driveshaft and discharge head shaft may be a non-spacer type (see Figure 14), or a spacer type (see Figure 15). The latter is used on pumps furnished with a mechanical seal to permit servicing of the seal without removal of the driver.

1. Driver support. When a driver support is furnished and not installed, proceed as follows.
   A. Hoist driver support, inspect the mounting surfaces, register and clean these surfaces thoroughly.
   B. Install driver support on discharge head and secure with capscrews provided.
2. Attach a sling to the lifting lugs of driver, hoist motor, inspect the mounting surface, register, and shaft extension, and clean those surfaces thoroughly. If any burrs are found, remove burrs with a smooth mill file, cleaning thoroughly afterward.

3. Orient the motor conduit box in the required position. Align the motor mounting holes with the mating tapped holes on the discharge head. Lower the motor until the registers engage and the motor rests on the discharge head. Secure motor with capscrews provided.
4. On drivers having a non-reverse ratchet or pins, manually turn the driver shaft clockwise viewed from the top until the non-reverse ratchet or pins fully engage.
5. Lubricate motor bearings in accordance with instructions given on lubrication plate attached to the motor case.

**NOTE: Please read and follow the motor manufacturer's instructions before lubricating the motor bearings. Too much lubricant can cause the bearings to overheat and prematurely fail.**

**⚠WARNING** ***The motor must not be tested for direction of rotation when coupled to the pump. If pump should rotate in the wrong direction, serious damage to the pump and motor would result. Also serious injury to personnel could result.***

6. Make temporary electrical connections according to tagged leads or diagram attached to the motor. Motor must rotate counter-clockwise when viewed from the top. See arrow on pump name plate. If motor does not rotate counter-clockwise, you can change the rotation by interchanging any two leads (For three phase only, for single phase motors see motor manufacturer's instructions.)
7. Motor shaft end play adjustment: if required, motor shaft end play shall be checked with a dial indicator prior to connecting the pump coupling to the solid shaft motor. Consult the applicable motor manufacturer's instruction manual for detailed information on motor shaft end play.

**COUPLING INSTALLATION:** **(SEE FIGURES 14 and 15)**

1. Check all mating face with a fine flat file before installation. Remove all burrs from face.
2. Apply a thin film of oil on the pump key (730) and insert key into headshaft keyway seat.
3. Gently lower pump hub of coupling (614) onto headshaft.
4. Thread on the adjusting plate (613) onto the headshaft until flush with top of the headshaft.
5. Clean driver shaft by removing all grease and burrs. Try to fit the key on the driver hub (610) before installing it to the driver shaft.

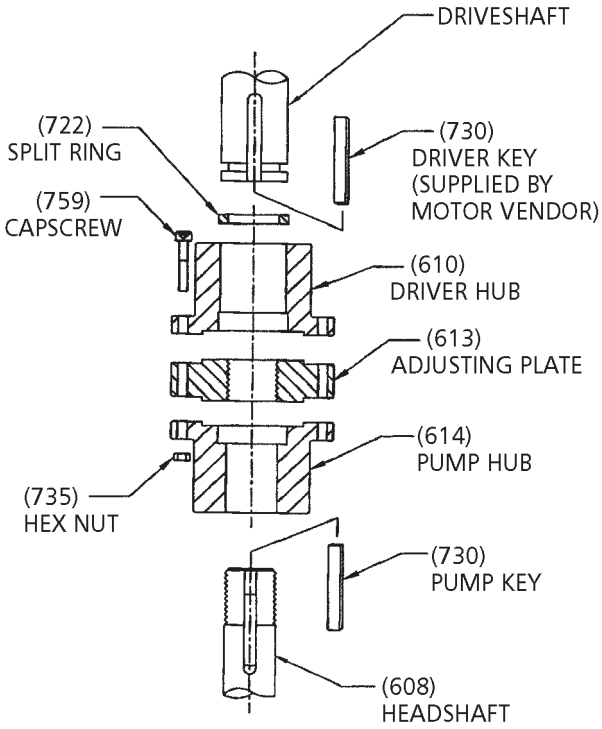


***Figure 14***

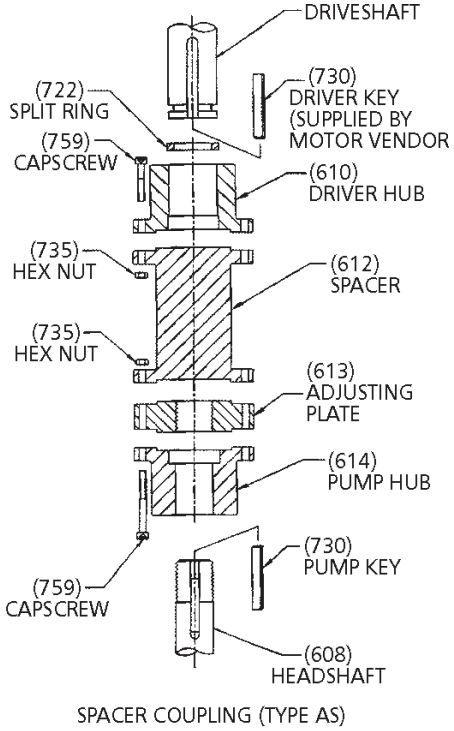


***Figure 15***

6. Apply a thin film of oil to the driver key (730) and insert key into drive shaft keyway seat. Place the driver hub (610) onto the drive shaft and with key slide it up the drive shaft until the annular grove is exposed. Install split ring (722) in the groove and slide driver hub down over the split ring to capture it.
7. If the pump is supplied with an adjustable spacer coupling (see Figure 15), install spacer (612) between headshaft and driveshaft hubs. Secure with capscrews (759) and hex nuts (735).

## IMPELLER ADJUSTMENT

Impeller adjustment is identical for all motors and right angle gear drives. Adjustment is accomplished by turning the adjusting plate (613). (See Figure 16 or 17). The correct adjustment is listed on the Outline Drawing for the specific unit. If the pump has a thrust pot, do not adjust the impeller position until the thrust pot has been installed and adjust the impeller position by using the adjust nut on the thrust pot.

NOTE: **Mechanical seal, when provided, must not be secured to the shaft prior to impeller adjustment. (open or enclosed type impellers). Shaft must move up or down within the seal Assembly.**

**For pumps handing liquids between –50° to 200° F, impeller adjustment can be made under ambient conditions. For liquids in excess of this range, it is recommended that impeller adjustment be made after the pump surface temperature has reached an equilibrium when charged with the pumpage. In those cases, where this is not feasible due to safety consideration or impossible due to external ice build up in cryogenic applications, refer to factory for specific instructions.**

## OPEN IMPELLERS

1. With the impellers touching the bottom of the bowls, turn the adjusting plate (613) towards the driver hub (610) or spacer (612) to obtain 0.015 inch clearance between the adjusting plate and driver hub or spacer for the first 10 feet of column. Add 0.010" for each additional 10 feet of column. See Figures 16 and 17. **Note: The determination of driver shaft end play can be critical and should be added to this setting.** For larger pumps over 8", this amount may be too little; please refer to Outline Drawing.

   **Example:** total pump length is 50 feet - set impellers at 0.055 inch.

2. After impeller adjustment, align adjusting plate (613) with the pump hub (614), and tightly draw coupling flanges together with capscrews (759) and nuts (735). (See Figures 14 and 15.)

3. Check shaft run out with dial indicator. For mechanical seal installation, the run out should be 0.005" or less.

4. Set seal after impeller adjustment. Securely tighten all set screws in the collar. Remove the spacer between the gland plate and collar. Retain spacer for future resetting of seal.

NOTE: **When impellers are reset, the seal must also be reset.**

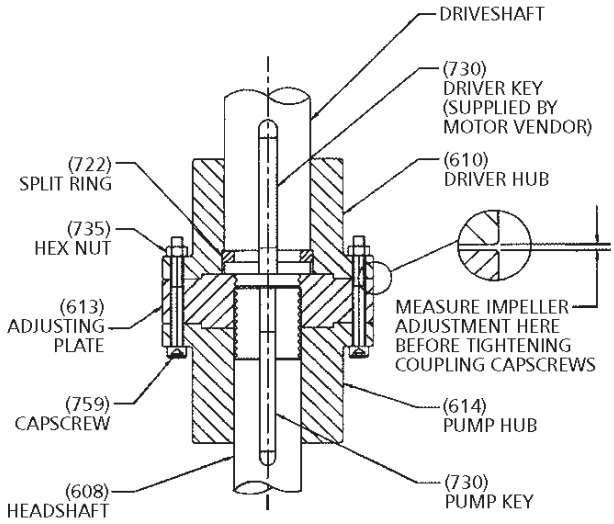


ADJUSTABLE COUPLING (TYPE A)
IMPELLER ADJUSTMENT

***Figure 16***

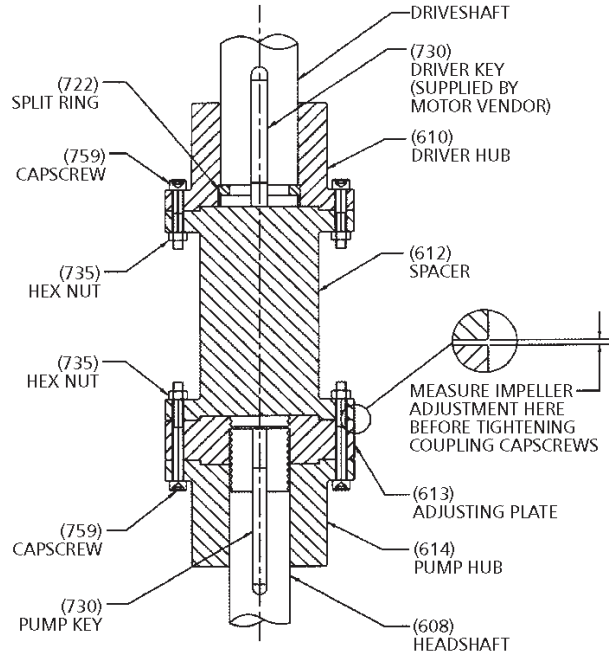


SPACER COUPLING (TYPE AS)
IMPELLER ADJUSTMENT

***Figure 17***

## ENCLOSED IMPELLERS

For enclosed impellers obtain the clearance between the adjusting plate and driver hub or spacer as specified on the outline drawing. See Figure 16 or 17.

## INSTALLING THE GREASE LUBRICATED THRUST POT

This type of thrust pot and the motor stand are assembled on the discharge head by the factory. This thrust pot is designed to be used with NEMA Vertical C-face motors. The motor shaft and the pump shaft are to be coupled with flexible coupling.

INSTALLATION:

1. Install both coupling halves prior to mounting the motor. Refer to the coupling manufacturer's instructions.
2. Using the lifting lugs on the motor, carefully lower the motor onto to the motor stand of the thrust pot (See Figure 18) and align the bolt holes.
3. Install the bolts finger tight.
4. Make temporary electrical connections according to tagged leads or diagram attached to the motor. Motor must rotate counterclockwise when viewed from the top. See arrow on pump name plate. If motor does not rotate counterclockwise, you can change the rotation by interchanging any two leads.

**⚠WARNING** ***Before beginning any alignment procedure, make sure driver power is locked out. Failure to lock out driver power will result in serious physical injury.***

---

ALIGNMENT OF FLEXIBLE COUPLING:

Alignment of the pump and motor is extreme importance for trouble-free mechanical operation. Straight edge alignment by an experienced installer proves adequate for most installations.

1. Check for coupling alignment by laying a straight edge across both coupling rims at four points 90° apart.
2. Move motor until straight edge rests evenly at each position. Repeat procedure until correct alignment is achieved.
3. Install flexible sleeve between the hubs per the manufacture's instructions.
4. Tighten all motor bolts.

**NOTE: Be sure the relief fitting (#11 in Figure 18) is clear of paint or any other obstructive material. Otherwise it will cause premature failure of the thrust pot and is not covered under warranty.**

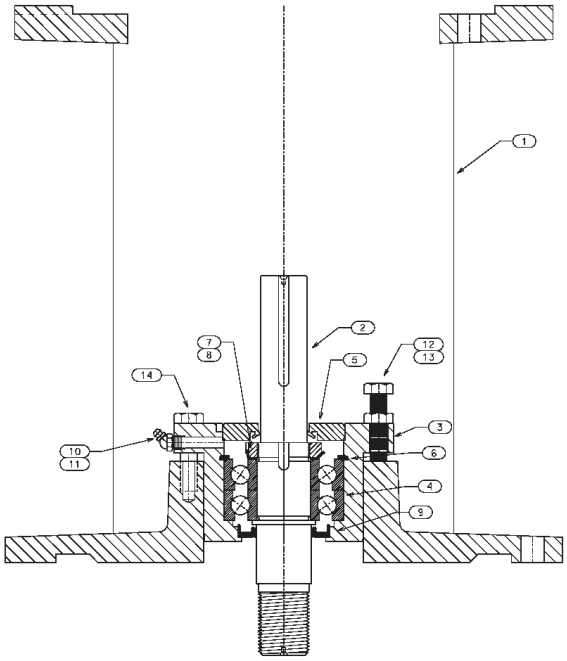


***Figure 18 – Grease Lubricated Thrust Pot***

**INSTALLING THE OIL LUBRICATED THRUST POT**

If the unit is supplied with a thrust pot (see Figure 19), the thrust pot should be installed on top of the discharge head or motor stand before installing the driver. The driving mechanism of the thrust pot assembly is similar to the hollow shaft motor. (See Figure 12)

1. Attach a sling to the thrust pot assembly through the windows on the motor adapter and hoist the assembly over the top of the discharge head.
2. Clean the mounting face with a flat file to remove any burrs of the discharge head and the thrust pot. Lower the thrust pot assembly and orient it so that the bolt hole on the base of the thrust pot and the top flange of the discharge head are line up. Install all the bolts to secure the assembly to the discharge head.
3. Lower the drive shaft through the quill of the thrust pot assembly to meet the shaft coupling. Apply a thin film of oil to the head shaft thread and screw into the shaft coupling.
4. For unit with mechanical seal and flanged coupling, install the spacer flange coupling as instructed on page 20.
5. Install the gib key (#16) into the drive shaft and the hollow shaft clutch.
6. Install the adjusting nut (#17) to hand tight.
7. With shafting all the way down and the impellers resting on their seats, turn the adjusting nut (#17) in counter-clockwise direction, thus lifting the shaft, until the impellers just clear their seats and the shaft/motor turns free by hand. This removes all deflection from the shaft.
8. For enclosed impellers, if pump setting is 200 feet or less, make another two turns on the adjusting nut for the first 100 feet (3 turns for 12 tpi shaft) Line-up one of the holes in the adjusting nut with the nearest hole in the driver coupling. Insert the capscrew in the hole and tighten it.

**NOTE: 1.00" and 1.18" diameter shafts are 12 tpi, 1.50" through 2.44" are 10 tpi, all larger sizes are 8 tpi.**

| ITEM | DESCRIPTION |
|---|---|
| 1 | Motor stand |
| 2 | Head shaft |
| 3 | Bearing housing |
| 4 | Bearings |
| 5 | Top seal |
| 6 | Snap ring |
| 7 | Lock nut |
| 8 | Lock washer |
| 9 | Lower seal |
| 10 | Grease lube fitting |
| 11 | Grease relief fitting |
| 12 | Hex tap bolt |
| 13 | Hex nut |
| 14 | Hex capscrew |

9. Install the bottom of the flexible coupling to the top of the drive shaft.

10. Attach a sling to the lifting lugs of driver and hoist the driver up. Inspect the mounting surface, register and clean these surfaces thoroughly. If any burrs are found, remove burrs with a smooth mill file, cleaning thoroughly afterward. Temporarily attach the top half of the flexible coupling to the motor shaft.

11. Orient the motor conduit box in the required position. Align the driver mounting holes with the mating tapped holes on the discharge head. Lower the driver until the registers engage and the driver rests on the thrust pot assembly. Secure driver with capscrews provided.

12. Secure the flexible coupling assembly.

13. Install the coupling guard.

14. Fill the oil reservoir with recommended oil.

## Pump Startup and Operation – SECTION 4

### PRE-START PROCEDURE

Consult the applicable manufacturer's instructions for detailed information for the prime mover (electric motor, engine or steam turbine), coupling, driveshaft, gear driver. Prior to startup, check the following:

1. Confirm that the following procedures described in the "Installing the Drivers" sections have been performed:

   A. Wiring of Driver.

   B. Driver must rotate counterclockwise (CCW) when viewed from above.

**⚠WARNING** ***Do not check motor rotation unless motor is bolted to pump and drive coupling is removed.***

***Be sure to remove all the hand tools and to install the coupling guards around all exposed shafts and couplings before start up of the pump. Failure to comply may result in sever personnel injury or death.***

   C. Check alignment of pump and driver.

   D. Impeller adjustment has been made.

   E. Mechanical seal lock collar is attached to shaft.

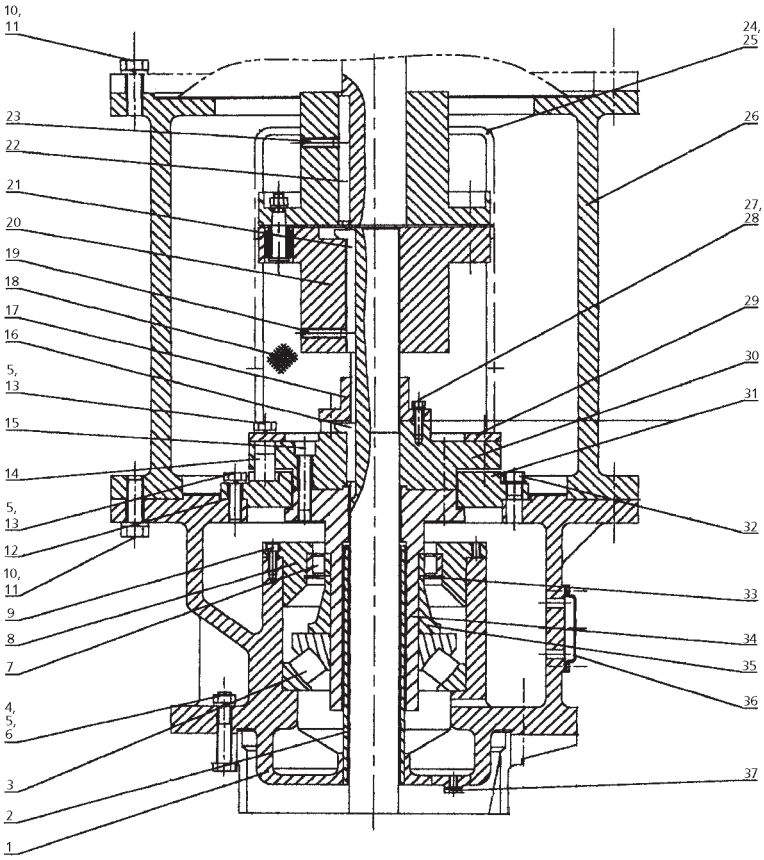


***Figure 19 – Oil Lubricated Thrust Pot***

| ITEM | DESCRIPTION |
|---|---|
| 1 | Thrust pot body |
| 2 | Tube - oil retaining |
| 3 | Thrust bearing |
| 4 | Capscrew - head to thrust pot |
| 5 | Washer - head to thrust pot |
| 6 | Hex Nut - head to thrust pot |
| 7 | Roller bearing |
| 8 | Bearing seat |
| 9 | Allen head screw |
| 10 | Capscrew - motor adapter to motor or thrust pot |
| 11 | Washer - motor adapter to motor or thrust pot |
| 12 | Gasket |
| 13 | Capcsrew |
| 14 | Non-reverse pin |
| 15 | Socket head screw |
| 16 | Gib key |
| 17 | Adjusting nut |
| 18 | Coupling guard |
| 19 | Setscrew |

| ITEM | DESCRIPTION |
|---|---|
| 20 | Flexible shaft coupling |
| 21 | Gib key |
| 22 | Key (motor shaft) |
| 23 | Setscrew |
| 24 | Round head screw for coupling guard |
| 25 | Washer coupling guard |
| 26 | Motor adapter |
| 27 | Capscrew - adjusting nut |
| 28 | Washer - adjusting nut |
| 29 | Retaining ring |
| 30 | Hollow shaft clutch |
| 31 | Non-reverse plate |
| 32 | Pipe plug - oil filling |
| 33 | Retaining ring |
| 34 | Hollow shaft |
| 35 | Shaft sleeve |
| 36 | Sight gauge |
| 37 | Pipe plug - oil drain |

2. For open lineshaft pump, make sure the stuffing box relief (bleed) line is connected (if applicable). For enclosed lineshaft pump, make sure the oil lubrication piping is connected and oil reservoir filled with the recommended oil. (See page 15 and 18.)

3. For pump with mechanical seal, make sure mechanical seal is properly lubricated and all piping to seal is connected. Also, check that all cooling, heating and flushing lines are operating and regulated.

4. For open lineshaft pump, when water level exceeding 30 feet, pre-lubrication is necessary. If it is equipped with prelube system supplied from a pressurized header, open the supply valve and allow the prelube water to flow for 15 seconds plus 15 seconds per 100 ft of pump setting. If it is equipped with a tank type prelube system, open the valve between the prelube tank and the pump and allow approximately half of the water in the tank to run into the pump before start the pump. The prelube valve should remain open during the start up.

5. For oil lubricated pump, clean and fill the lubricator tank with recommended oil. (See page 27.) Manually open the lubricator valve and allow oil to run into the shaft enclosing tube for at least 20 minutes for each 100 feet of setting prior to start up. On the system equipped with a solenoid operated lubricator valve that cannot be energized independently, it will be necessary to remove the valve stem to allow the oil to flow into the tube. If the start up is delayed or the pump has been shut down for over 150 hours, the lubrication procedure must be repeated just prior to actual start up.

6. Open the air release system isolation valve. Adjusting the air release system throttling device so that it is partially open. It should not be closed or fully open.

**NOTE: Not exhausting the air or exhausting it too fast can damage the pump.**

7. All connections to driver and starting device match wiring diagram. Voltage, phase and frequency on motor nameplate agree with line current.

8. Rotate shaft manually to ensure impellers are not binding.

9. Verify that driver bearings are properly lubricated and check oil level in housing.

10. Inspect discharge piping connection, valves and pressure gauges for proper operation.

## PUMP STARTUP

1. Partially close the valve in the discharge line.

2. Start the pump. If any abnormal noises, jerking or vibration is noted, stop the pump immediately, determine the cause of the abnormalities and correct them.

3. After the pump is operating at full speed, slowly open discharge valve. If driver overheats or there is excessive vibration, stop the pump, determine the causes and correct them.

4. If the air release valve is manually operated, close it.

5. For open lineshaft pumps, with the pump in operation, there should be some leakage at the stuffing box packing. The correct leakage rate is approximately one drop per second. Check the temperature of the leakage as well as the discharge head. If the pump runs hot and the leakage begins to choke off, stop the pump and allow it to cool down. A few light taps with a hammer on the gland will upset the packing sufficiently to resume leakage. After pump has cooled, restart pump and follow preceding procedure. Run pump 15 minutes, check leakage, if it exceeds two drops per second, adjust packing as described in “Packing Adjustment and Replacement”.

6. For enclosed line shaft pumps, adjust the lubricator valve for the proper flow rate of the lubrication oil. (See Page 17.)

7. For pump with mechanical seal, if seal leaks slightly at startup, allow a reasonable amount of time for seal to adjust itself. Liquids with good lubricating qualities normally take longer to wear in the seal than liquid with lesser qualities. When a seal starts out with a slight leak and gets progressively less while running, it is indicative of leakage across the seal faces. Continued running will eliminate this. Where leakage occurs immediately and remains constant, unaffected by running, it usually indicates secondary seal (Shaft packing) damage, or seal faces are warped out of flat.

## PREVENTIVE MAINTENANCE

**⚠WARNING** ***Before initiating maintenance procedures, disconnect all electric sources to the equipment and accessories and completely. Discharge all parts and accessories which retain electric charges. Failure to comply may result in severe personnel injury or death.***

Preventive maintenance includes periodic inspection of oil level in the oil reservoir (for pump with oil lube column) re-lubrication of electric motors, gear drives and prime mover. Systematic inspection of the pump and its components shall be made at regular intervals. The frequency required depends upon the operating conditions of the pump and its environment. See following Preventive Maintenance schedule. Consult the applicable manufacturer's instructions for detailed information on maintenance for the prime mover, driveshaft, electric motors and gear drives. Any deviation in performance or operations from what is expected can be traced to some specific cause. Variances from initial performance will indicate changing system conditions, wear, or impending breakdown of the unit.

## PREVENTIVE MAINTENANCE SCHEDULE

| PROCEDURE | TIME INTERVAL (in operating hours) |
|---|---|
| Clean dirt, oil and grease from driver and discharge head. | As required |
| Clean driver ventilation passage to prevent overheating. | As required |
| Change lubrication in gear drive. | 2,000 or once a year |
| Change lubrication in thrust pot. | See page 27 |
| Check oil level in the reservoir. It should never be less than ½ full. Refill, check drip rate. | 24 |
| Tighten all loose bolts and check for excessive vibration. | As required |
| If packing is grease lubricated, add as required. | 100 |
| Check that there is some leakage through stuffing box while pump is in operation. Do not tighten gland nuts unless necessary. Refer to page 24 for tightening requirement. | As required |
| Maintain a liquid film of lubrication between the seal rubbing faces. | As required |
| Re-grease the motor bearings: | |
| 1800 RPM and above | Refer to Motor IOM |
| Below 1800 RPM | Refer to Motor IOM |

## PACKING ADJUSTMENT AND REPLACEMENT

Pumps equipped with packing, shall be adjusted whenever the leakage rate exceeds two drops per second. If there is no leakage or the stuffing box overheats, do not back off gland nuts while the pump is running. This will allow the entire set of rings to move away from the bottom of the box, without relieving pressure of the packing on the shaft. Stop the pump and allow packing to cool then restart the pump.

It may be necessary to repeat this procedure several times before proper amount of liquid comes through to efficiently prevent overheating. If leakage is excessive, adjust the stuffing box as follows:

1. With the pump in operation, tighten the gland nuts one-quarter turn for each adjustment. Allow packing to equalize against the increased pressure and leakage to gradually decrease to a steady rate, before making another adjustment.

**⚠CAUTION** ***Do not over tighten the stuffing box. Excessive pressure can wear out packing prematurely and seriously damage the shaft.***

2. With the pump shut down and when packing has been compressed to the point that the gland is about to contact the upper face of stuffing box, remove the split gland, add one extra packing ring and readjust. If this fails to reduce leakage to two drops per second, remove all packing rings and replace with new rings.
3. Remove the packing with the aid of a packing hook. If a lantern ring is provided, remove it by inserting a wire hook in the slots of the ring and pull it from the packing box. Thoroughly clean the stuffing box of all foreign matter.
4. If the replacement packing is in the form of a continuous coil or rope, it must be cut into rings before installing. Tightly wrap one end of the packing material around the top shaft like one coil spring, and cut through the coil with a sharp knife. For re-packing sequence, refer to "Installing the Stuffing Box" (page 15).

**⚠WARNING** ***Do not over tighten the stuffing box. Excessive pressure can wear out packing prematurely and seriously damage the shaft.***

## SEASONAL SHUTDOWN

**⚠WARNING** ***Prior to restarting the pump, manually rotate the shaft several times.***

1. For oil lubricated pumps that are shut down for an extended period of time, it is suggested that the pump be operated for at least 15 minutes every two weeks with oil feed wide open 2 hours before and during startup in order to maintain a film of oil on the shafting and shaft bearings.
2. For product (or water) lubricated pump, if the pump is to be shut down for an extended period of time, operate it for at least 15 minutes with adequate pre-lubrication every two weeks.
3. Before resuming normal operations, oil should be changed on drivers, right angle gear and lubricating oil system. After 15 minutes of operation adjust the lateral.

## THRUST POT LUBRICATION AND MAINTENANCE

### OIL LUBRICATED THRUST POT (SEE FIGURE 19)

**⚠WARNING** ***Pumps are shipped without oil. Oil-lubricated bearings must be lubricated at jobsite.***

It is a good practice to flush the oil reservoir before first time operation and at the time of oil changes to remove all grit particles in the oil reservoir sump. Use the same type of oil to flush reservoir as specified for lubrication. (See page 27 on recommended turbine oil.) Remove drain plug (Item # 39) before flushing. Flushing oil may be poured through oil fill opening (item #33) after removing oil fill plug #39. The proper oil level when the unit is not running shall be not more than 1/8" to ¼" from the top of the oil sight gauge (Item #37). Overfilling may result in overheating of the unit. During operation the oil level in the sight gauge may be higher than the recommended range mentioned above. Under no circumstance is it allowed to rotate the unit when the oil in the sight gauge is not at the required level.

To avoid oxidation of the anti-friction bearings during shut-down periods lasting longer than one week, it is recommended to fill up the oil reservoir until the oil runs over the oil retainer tube (Item #2) and down the shaft so that the bearings remain completely immersed in the oil. Before startup, do not forget to drain the excess oil to its required level. Oil change depends on the severity of the environment. Generally speaking, when the oil in the sight gauge changes to a darkish brown color it is time for an oil change. However, for a longer bearing life, it is recommended that the oil be changes every six months. Be sure to flush the oil reservoir (see above) with each oil change.

### GREASE LUBRICATED THRUST POT (SEE FIGURE 18)

**Lubricating Intervals in Operating Hours**

| Thrust Rating | Operating Speed (RPM) | | | |
|---|---|---|---|---|
| | <1770 | 1770 | 2900 | 3500 |
| 2000 lbs | 2000 | 2000 | 2000 | 1800 |
| 4000 lbs | 2000 | 2000 | 1600 | 1400 |
| 6600 lbs | 2000 | 2000 | 1400 | 1200 |

The bearing is pre-lubricated at factory. Re-grease the bearing according the following procedure and per the schedule in the above table. Following are the re-grease procedure:

1. Wipe dirt from grease fittings.
2. Check relief port 180° from fitting to make sure it is open.
3. Fill the grease cavity through the fitting until fresh grease comes out the relief hole.
4. Ensure the relief port closes.

**NOTE: The bearing temperature usually rises after re-greasing due to an excess supply of grease. Temperature will return to normal after the pump has run and purged the excess from the bearings, usually two to four hours.**

For most operating conditions, lithium based NLGI 2 grease is recommended. This is the grease factory used for pre-lubrication. This grease is acceptable for bearing temperatures of 5° to 230° F. Temperature extremes (either high or low) may require different type grease. Following table lists some various manufacturers' compatible grease:

| | |
|---|---|
| Mobil | Mobilith AW2 |
| Amoco | Amolith EP2 |
| Ashland | Multilube EP2 |
| Exxon | Unirex N2 |
| Shell | Alvania EP LF2 |
| Unocal | Unoba EP2 |
| Chevron | Dura-Lith EP NLGI2 |

**NOTE: If it is necessary to change the grease type or consistency, the bearing must be removed and all the old grease eliminated from the housing and bearing.**

**⚠WARNING** ***Bearings must be lubricated properly in order to prevent excess heat generation, spark and premature failure.***

| RECOMMENDED LUBRICANTS | | |
|---|---|---|
| | **Grease for Lineshafts, Suction Bowl Bearings and Shaft Packings** | **Turbine oils for Lineshafts, Suction Bowl Bearings and similar applications** |
| **Operating Temperature Range** | 20° F to 120° F | 20° F to 120° F |
| **Required properties** | | |
| Pour Point : | 20° F or lower (base oil) | 20° F or lower |
| Flash Point : | 300° F or higher (base oil) | 300° F or higher |
| 100° F Viscosity : | 450 SUS or higher (base oil) | 150 SUS or higher |
| ASTM Dropping Point : | 160° F or higher | 32 |
| Nitrile Rubber Swell : | Minimal (up to 3%) | Minimal (up to 3%) |
| Thickener Type: | Calcium or Lithium | |
| Thickener Percent: | 15% Minimum | |

| Manufacturer | Recommended Standard Industrial Lubricants | |
|---|---|---|
| Chevron Texaco Corp. | Chevron<br>Ulti-Plex Grease EP2 | Chevron<br>*Hydraulic Oil AW32 |
| | Texaco<br>Novatex EP2 | Texaco<br>*Regal EP 32 |
| CITGO Petroleum Corp. | Mystik Oil & Grease<br>Mystik JT-6 Grease (5484) | Mystik Oil & Grease<br>*Mystik Turbax Oil 32 (1812) |
| | Citgo Oil & Grease<br>Premium Lithium EP2 | Citgo Oil & Grease<br>Pacemaker Oil 32 |
| | Lyondell Lubricants<br>Litholine HEP Grease | Lyondell Lubricants<br>*Duro Oil 32 |
| Exxon Mobil Corp. | Mobil<br>Mobilux Grease EP2 | Mobil<br>DTE Oil 24 |
| | Exxon<br>Lodok EP 2 | Exxon<br>*Nuto H Hydraulic Oil 32 |
| 76 Lubricants Co. | 76 Lubricants<br>Multiplex EP Grease 2 | 76 Lubricants<br>Hydraulic Oil AW/D 32 |
| Shell Oil | Shell<br>Alvania EP Grease 2 | Shell<br>*Tellus Plus Oil 32 |

*Note: * in front of the oil grade means it is suitable for sub zero (F) temperature service.*

| Manufacturer | Recommended Food Machinery Lubricants | |
|---|---|---|
| Chevron Texaco Corp. | Chevron<br>#FM Grease EP2 | Chevron<br>*#Lubricating Oil FM32 |
| | Texaco<br>#Cygnus Grease 2 | Texaco<br>#Cygnus Hydraulic Oil 32 |
| CITGO Petroleum Corp. | Mystik Oil & Grease<br>#Mystik FG2 Grease (5607) | Mystik Oil & Grease<br>#Mystik FG/AW 32 Oil (1931) |
| | Citgo Oil & Grease<br>#Clarion FG HTEP Grease | Citgo Oil & Grease<br>#Clarion FG AW Oil 32 |
| | Lyondell Lubricants<br>Ideal FG 2 Grease | Lyondell Lubricants<br>#Ideal FG 32 Oil |
| Exxon Mobil Corp. | Mobil<br>#Mobil Grease FM102 | Mobil<br>DTE FM 32 Oil |
| | Exxon<br>Foodrex FG 1 | Exxon<br>*Nuto FG Hydraulic oil 32 |
| 76 Lubricants Co. | 76 Lubricants<br>76 Pure FM Grease | 76 Lubricants<br>76 FM Oil 32 |

*Note: 1. * in front of the oil grade means it is suitable for sub zero temperature (F) service.*
*2. Food machinery lubricants meet USDA H-1 requirements and FDA document 21 CFR 178.3570.*
*In addition, # in front of the product name means it is NSF 61 registered products.*

| TROUBLESHOOTING | | |
|---|---|---|
| **TROUBLE** | **PROBABLE CAUSE** | **REMEDY** |
| 1. Pump does not start | A. Electrical circuit open or not completed<br>B. Improper lateral adjustment. Impeller on bottom.<br>C. Low voltage supplied to electric driver<br>D. Defective motor | Check circuit and correct.<br>Reset impeller adjustment, See pages 19 or 21.<br>Check whether driver wiring is correct and receiving full voltage.<br>Consult factory. |
| 2. No liquid delivered | A. Discharge valve closed<br>B. Speed is too low<br>C. Wrong rotation<br>D. Obstruction in liquid passage<br>E. Water level in the well is below 1st stage impeller<br>F. Static lift too high<br>G. Field head requirement greater than design head<br>H. Damaged bowl assembly; Broken or disconnected shaft<br>I. Driver with reduced voltage, or reduced current starting does not come up to speed | Be sure the discharge valve is in full open position.<br>Check if driver is directly across the line and receiving full voltage.<br>Check for CCW rotation when viewed from above. Check engagement of motor coupling.<br>Pull pump, inspect suction strainer, impeller and bowls.<br>Increase pump setting by adding column.<br>Check the dynamic water level in well. Consult factory for adding stages or increase impeller diameter.<br>Check system friction loss. Increase discharge piping size. Consult factory for adding stages or increase impeller diameter<br>Pull pump and repair all damaged components.<br>Check RPM, voltage and amps. |
| 3. Not enough liquid | A. Same as items 2-A thru 2-G<br>B. Cavitation<br>C. Impellers adjusted too high<br>D. Air or gas in the water<br>E. Excessive pump wear | Same as items 2-A thru 2-G.<br>Insufficient NPSH available. Consider lowering the bowl assembly by adding column.<br>See pages 19 or 21.<br>If successive starts and stops do not remedy, lower pump if possible, or close discharge valve to maintain well pumping level at a lower GPM.<br>Pull pump and repair as required. |
| 4. Not enough pressure | See not enough liquid. | See not enough liquid. |
| 5. Pump works for a while and quits | A. Excessive horsepower required.<br>B. Pumping higher viscosity or specific gravity liquid than designed for.<br>C. Mechanical failure of critical parts<br>D. Suction strainer clogged<br>E. Misalignment<br>F. Break suction | Use larger driver. Consult factory.<br>Test liquid for viscosity and specific gravity.<br>Check bearings and impellers for damage. Any irregularities in these parts will cause a drag on the shaft.<br>Pull pump and clean the strainer.<br>Realign pump and driver.<br>Check dynamic water level in the well. Lower bowl assembly by adding column. |

| TROUBLESHOOTING | | |
|---|---|---|
| **TROUBLE** | **PROBABLE CAUSE** | **REMEDY** |
| 6. Pump takes too much power | A. Damaged impeller<br>B. Foreign object lodged between impeller and bowl<br>C. Specific gravity higher than pump designed for<br>D. Viscosity too high, partial freezing of pumpage<br>E. Defective bearing<br>F. Packing is too tight | Inspect, replace if damaged.<br>Remove object as required.<br>Test liquid for viscosity and specific gravity.<br>Check for both. They can cause drag on impeller.<br>Replace bearing, check shaft or shaft sleeve for scoring.<br>Release gland pressure. Retighten. (See page 15.) Keep leakage flowing. If no leakage, check packing, sleeve or shaft. |
| 7. Pump is too noisy | A. Cavitation<br>B. Bent shaft<br>C. Rotating parts binding, loose or broken.<br>D. Bearings are worn out<br>E. Resonance | Same as Item 3-B.<br>Straighten as required. See Page 13 for runout limits.<br>Replace as required.<br>Replace bearings.<br>Check piping strain, consult factory. |
| 8. Excessive vibrations | A. Coupling misalignment, bent impeller unbalance, worn bearings, cavitation, piping strain and/or resonance<br>B. Motor or gear driveshaft end play maladjustment<br>C. Bent shaft<br>D. Crooked well. | Determine cause utilizing shaft vibration frequency analyzer and/or disassemble pump. Complex problem may require factory service assistance.<br>See Installation of Hollow Shaft Driver (VHS), Page 18.<br>Straighten as required. See Page 13 for runout limits.<br>Survey the well and consult factory. |
| 9. Pump leaks excessively at stuffing box | A. Defective packing<br>B. Wrong type of packing | Replace worn packing.<br>Replace packing not properly installed or run-in. Replace improper packing with correct grade for liquid being pumped. |
| 10. Stuffing box is overheating | A. Packing is too tight<br>B. Packing is not lubricated<br>C. Wrong grade of packing<br>D. Stuffing box improperly packed | See item 6-F.<br>Release gland pressure and replace all packing if burnt or damaged. Re-grease packing as required.<br>Consult factory.<br>Repack stuffing box. |
| 11. Packing wears too fast | A. Shaft or shaft sleeve worn<br>B. Insufficient or no lubrication<br>C. Improperly packed<br>D. Wrong grade of packing | Pull pump and remachine, or replace shaft and/or sleeve.<br>Repack and make sure packing is loose enough to allow some leakage.<br>Repack properly, make sure all old packing is removed and stuffing box is clean.<br>Consult factory. |

## DISASSEMBLY

**⚠WARNING** *Before working on pump or motor, lock out driver power to prevent accidental startup and physical injury.*

**NOTE: Pump components should be match-marked prior to disassembly to ensure they are reassembled in the correct location.**

### HEAD AND COLUMN

1. On pumps which are driven through a gear drive, remove the driveshaft between the gear and the prime mover.

2. On pumps, which are electric motor driven, remove the electrical connections at the conduit box and tag the electrical leads, so they can be reassembled the same way they were disassembled.

3. Uncouple driver (or gear box) from pump shaft and mounting flanges and lift off by the lifting lugs or eyebolts as furnished.

**⚠WARNING** *Never try to lift entire pump assembly by the lifting lugs or eyebolts furnished for the driver only.*

4. Disconnect discharge head from the discharge piping. Remove all hold down bolts and external piping. Remove coupling, packing box and proceed with disassembly down to the bowls by reversing the procedures described in detail for assembling the unit.

### BOWL ASSEMBLY

The bowl assembly is composed of a suction bowl/bell, intermediate bowl(s), top bowl, impellers and securing hardware, bearings, and pump shaft.

Turbine bowl impellers are secured to the shaft by either a taperlock or a key and split thrust ring. Follow only those procedures that apply to the particular construction supplied.

**NOTE: Match mark bowl assembly in sequence of disassembly to aid in the reassembly procedure.**

### TAPERLOCK CONSTRUCTION BOWL DISASSEMBLY

1. Remove capscrews that secure top intermediate bowl (669), not shown, to intermediate bowl (670). See Figure 1 or 2.

2. Slide discharge bowl and top bowl off the pump shaft (660).

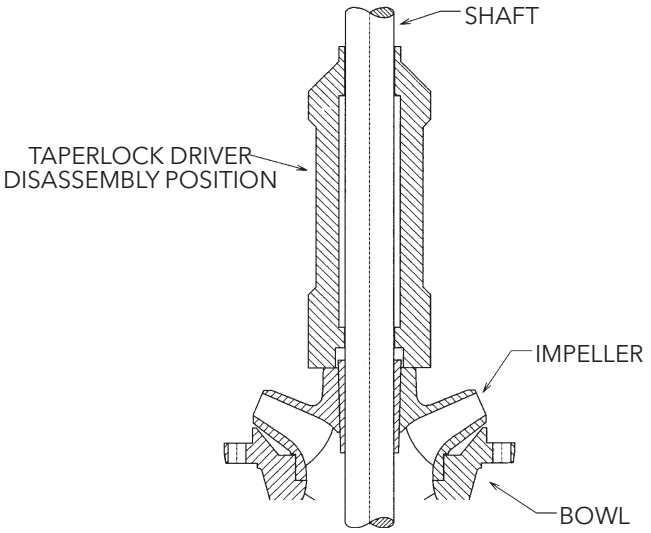


***Figure 20***

3. Pull shaft out as far as possible and strike the hub of the impeller by taperlock driver, or equivalent, until the impeller is off the taperlock (See Figure 20).

4. After the impeller is free, insert a screw-driver into the slot in the taperlock and spread it open. Slide the taperlock and impeller off the pump shaft.

5. Repeat the above procedures until the bowl assembly is completely disassembled.

### KEYED BOWL DISASSEMBLY

1. Remove capscrews that secure top bowl (669) to intermediate bowl (670).

2. Slide top bowl off the pumpshaft (660).

3. Remove capscrews (759) and split thrust ring (725) from pump shaft.

4. Slide impeller off the pumpshaft and remove the key (730). If impeller is seized to the shaft, strike impeller with a fiber mallet and drive impeller off the pumpshaft.

5. Repeat the above procedures until the bowl assembly is completely disassembled.

### TURBINE BOWL – WEAR RING REMOVAL

1. Remove set screws or grind off tack weld, when rings are furnished with those locking methods.

2. Utilizing a diamond point chisel, cut two "V" shaped grooves on the bowl wear ring approximately 180° apart. Use extreme care not to damage the wear ring seat.

3. With a chisel or drift, knock the end of one half of the ring in, and pry the ring out.

4. On special materials such as chrome steel, set up the bowl in a lathe and machine the wear ring off using extreme care not to machine or damage the ring seat.

### IMPELLER WEAR RING REMOVAL

1. Utilizing a diamond point chisel, cut two "V" shaped grooves on the impeller wear ring approximately 180 degrees apart. Use extreme care not to damage the wear ring seat.

2. With a chisel or drift, knock the end of one half of the ring out, and pry the ring off.

3. On special materials such as chrome steel, set up the impeller in a lathe and machine the wear ring off using extreme care not to machine or damage the ring seat.

### BOWL AND LINESHAFT BEARING REMOVAL

Utilizing an arbor press and a piece of pipe or sleeve with outside diameter slightly smaller than the outside diameter of the bearing to press the bearing out.

**NOTE: Bowl bearings are press fit. Do not remove unless replacement is necessary.**

## INSPECTION AND REASSEMBLY

### INSPECTION AND REPLACEMENT

1. Clean all pump parts thoroughly with a suitable cleaner.

2. Check bearing retainers for deformation and wear.

3. Check shafts for straightness and excessive wear on bearing surfaces. Average total runout should be less than 0.0005" TIR per foot, not to exceed 0.005" T.I.R. for every 10 feet of shafting.

4. Visually check impellers and bowls for cracks and pitting. Check all bowl bearings for excessive wear and corrosion.

5. Replace all badly worn or damaged parts with new parts. In addition, replace all gaskets and packing as required.

### TURBINE BOWL WEAR RING INSTALLATION

Place chamfered face of the bowl or impeller wear ring towards the ring seat and press the ring into the seat. Use an arbor press or equal, making sure the ring is flush with the edge or the wear ring seat.

### INSTALL BOWL AND LINESHAFT BEARING
(Refer to Figure 1 for components numbers)

1. Press bearing (653) into retainer (652) using an arbor press or equal.

2. Press bearing (690) into suction bowl/bell (689) by using an arbor press or equal. The top of the bearing should protrude above the suction hub equal to the depth of the counter bore in the sand collar.

3. Place the bowl (670) with the flange downward and press bearing (672) through chamfered side of bowl hub until the bearing is flush with the hub by using an arbor press or equal.

### REASSEMBLY OF THE BOWL ASSEMBLY WITH TAPERLOCK CONSTRUCTION

1. For ease in reassembly apply a thin film of turbine oil to all mating and threaded parts.

2. If the sand collar is not assembled to the shaft, install the sand collar. The sand collar is attached to the shaft with a shrink fit. The larger diameter of the counterbore of the sand collar goes toward the suction bell bearing. Heat the sand collar until it slips over the shaft and quickly position it so that the bottom of the sand collar is set according to the "X" dimension, before it cools. See Figure 21. See Table 3 for the "X" dimensions. Slide the plain end of the pump shaft into the suction bowl/bell bearing until the sand collar rests against the suction bowl/bell.

**⚠WARNING** *Wear protective gloves and use appropriate eye protection to prevent injury when handling hot parts.*

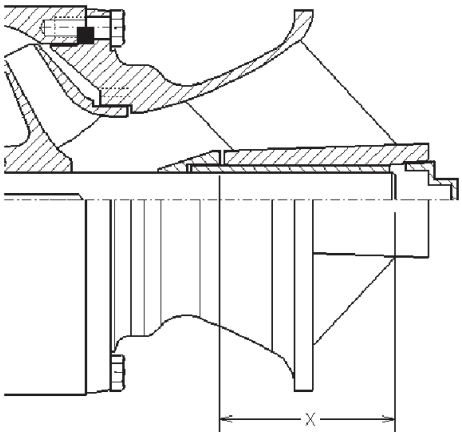


***Figure 21***

**TABLE 3 Sand Collar Location Dimension**

| Pump Model | "X" Dim. | | Pump Model | "X" Dim. |
|---|---|---|---|---|
| 5C, 5T | 1.88" | | 13A, 13RA | 7.19" |
| 5RWA | 1.81" | | 13C | 5.13" |
| 6A, 6RA | 3.13" | | 14DH | 8.13" |
| 6C | 2.25" | | 14F, 14H, 14RH | 7.13" |
| 6DH | 3.50" | | 14RJ | 5.06" |
| 7A, 7RA | 3.13" | | 15F | 9.50" |
| 7C, 7T, 7WA | 2.81" | | 16B | 6.56" |
| 8A, 8RA | 3.13" | | 16DH | 8.63" |
| 8DH | 4.44" | | 16DM | 5.88" |
| 8I | 2.94" | | 16F, 16RG | 6.69" |
| 8RJ | 2.88" | | 18B | 7.25" |
| 9A, 9RA | 3.41" | | 18C | 6.63" |
| 9RC, 9T, 9WA | 5.19" | | 18D | 7.56" |
| 10A, 10RA | 4.31" | | 18G | 5.75" |
| 10DH | 6.31" | | 20B, 18L | 6.88" |
| 10L | 6.25" | | 20E, 18H | 7.00" |
| 10RJ | 5.00" | | 20C | 6.44" |
| 10WA | 5.19" | | 20H | 9.00" |
| 11A, 11RA | 5.31" | | 24C | 12.38" |
| 11C | 4.88" | | 24D | 9.38" |
| 11WA | 5.13" | | 24E | 8.13" |
| 12C | 5.31" | | 24F | 10.44" |
| 12DH | 5.19" | | 24G | 8.00" |
| 12FR | 6.50" | | 26G | 7.75" |
| 12WA, 12RA | 5.00" | | 28G | 8.75" |
| 12RJ | 4.94" | | 30B | N/A |

3. Hold the shaft in this position by inserting a long capscrew (or all thread rod with a hex nut) with an assembly jig into the bottom end of the suction hub and secure tight into the threaded hole at the end of the shaft. **Be sure the shaft has been cleaned and checked for straightness.**

4. Slide the first impeller over the shaft until it seats on the suction bowl/bell.

**NOTE: If there are different diameter impellers, put the large diameter impeller at the lower stage.**

5. Insert a screwdriver into the slot in the taperlock (677) to spread the slot and slide the taperlock over the pump shaft. Hold the impeller against bowl and slide the taperlock into the impeller hub. **Be sure the taperlocks have been cleaned and are dry.**

6. Hold impeller firmly against the suction bowl/bell and drive the taperlock into place with a taperlock driver, (See Figure 22). After the impeller is secured in position, the top end of the taperlock should be 1/8" above the impeller hub.

7. Slide intermediate bowl (670) onto shaft and secure with capscrews provided.

8. Repeat preceding procedure for number of stages required.

9. Remove long capscrew and the assembly jig at the end of suction hub and check that the shaft rotates freely without dragging or binding. Also check for adequate lateral (end play).

**FINAL ASSEMBLY**

After reassembling the bowl assembly, see Section 3 for installation. Refer to Section 4, for startup and operation procedures.

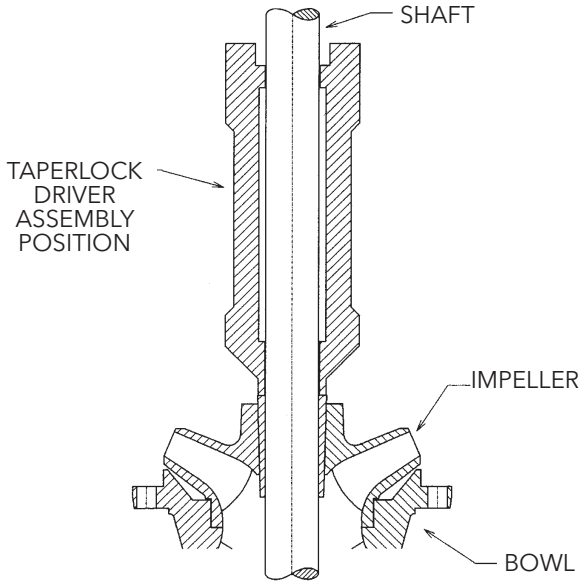


***Figure 22***

## ORDERING PARTS

When ordering spare or replacement parts, the pump serial number and size and type of pump must be given. This can be found on the nameplate furnished with the unit. Give the complete name and reference number of each part as indicated on the applicable sectional drawings, Figure 1 to Figure 4, and the quantity required.

## STOCKING SPARE PARTS

Spare parts to be kept in inventory will vary according to service, field maintenance, allowable down time and number of units. A Minimum inventory of one complete set of bearings and one spare of each moving part is suggested.

## RETURNING PARTS

A completed Return Material Authorization (RMA) form must accompany all materials returned to the factory. The RMA forms can be obtained direct from the factory or through your local Goulds Water Technology representative. The RMA form must be filled in completely and forwarded as directed thereon. Parts being returned under warranty claim must have a complete written report submitted with the RMA form.

**⚠WARNING** ***Returned goods must be free of any hazardous materials, substances, or residue.***

**⚠CAUTION** ***Returned material must be carefully packaged to prevent transit damage - the factory cannot assume any responsibility for parts damaged in transit.***

# NOTES

## COMMERCIAL WARRANTY

For goods sold to commercial buyers, Seller warrants the goods sold to Buyer hereunder (with the exception of membranes, seals, gaskets, elastomer materials, coatings and other "wear parts" or consumables all of which are not warranted except as otherwise provided in the quotation or sales form) will be (i) be built in accordance with the specifications referred to in the quotation or sales form, if such specifications are expressly made a part of this Agreement, and (ii) free from defects in material and workmanship for a period of one (1) year from the date of installation or twelve (12) months from the date of shipment (which date of shipment shall not be greater than eighteen (18) months after receipt of notice that the goods are ready to ship), whichever shall occur first, unless a longer period is specified in the product documentation (the "Warranty").

Except as otherwise required by law, Seller shall, at its option and at no cost to Buyer, either repair or replace any product which fails to conform with the Warranty provided Buyer gives written notice to Seller of any defects in material or workmanship within ten (10) days of the date when any defects or non-conformance are first manifest. Under either repair or replacement option, Seller shall not be obligated to remove or pay for the removal of the defective product or install or pay for the installation of the replaced or repaired product and Buyer shall be responsible for all other costs, including, but not limited to, service costs, shipping fees and expenses. Seller shall have sole discretion as to the method or means of repair or replacement. Buyer's failure to comply with Seller's repair or replacement directions shall terminate Seller's obligations under this Warranty and render the Warranty void. Any parts repaired or replaced under the Warranty are warranted only for the balance of the warranty period on the parts that were repaired or replaced. Seller shall have no warranty obligations to Buyer with respect to any product or parts of a product that have been: (a) repaired by third parties other than Seller or without Seller's written approval; (b) subject to misuse, misapplication, neglect, alteration, accident, or physical damage; (c) used in a manner contrary to Seller's instructions for installation, operation and maintenance; (d) damaged from ordinary wear and tear, corrosion, or chemical attack; (e) damaged due to abnormal conditions, vibration, failure to properly prime, or operation without flow; (f) damaged due to a defective power supply or improper electrical protection; or (g) damaged resulting from the use of accessory equipment not sold or approved by Seller. In any case of products not manufactured by Seller, there is no warranty from Seller; however, Seller will extend to Buyer any warranty received from Seller's supplier of such products.

THE FOREGOING WARRANTY IS EXCLUSIVE AND IN LIEU OF ANY AND ALL OTHER EXPRESS OR IMPLIED WARRANTIES, GUARANTEES, CONDITIONS OR TERMS OF WHATEVER NATURE RELATING TO THE GOODS PROVIDED HEREUNDER, INCLUDING WITHOUT LIMITATION ANY IMPLIED WARRANTIES OF MERCHANTABILITY AND FITNESS FOR A PARTICULAR PURPOSE, WHICH ARE HEREBY EXPRESSLY DISCLAIMED AND EXCLUDED. EXCEPT AS OTHERWISE REQUIRED BY LAW, BUYER'S EXCLUSIVE REMEDY AND SELLER'S AGGREGATE LIABILITY FOR BREACH OF ANY OF THE FOREGOING WARRANTIES ARE LIMITED TO REPAIRING OR REPLACING THE PRODUCT AND SHALL IN ALL CASES BE LIMITED TO THE AMOUNT PAID BY THE BUYER FOR THE DEFECTIVE PRODUCT. IN NO EVENT SHALL SELLER BE LIABLE FOR ANY OTHER FORM OF DAMAGES, WHETHER DIRECT, INDIRECT, LIQUIDATED, INCIDENTAL, CONSEQUENTIAL, PUNITIVE, EXEMPLARY OR SPECIAL DAMAGES, INCLUDING BUT NOT LIMITED TO LOSS OF PROFIT, LOSS OF ANTICIPATED SAVINGS OR REVENUE, LOSS OF INCOME, LOSS OF BUSINESS, LOSS OF PRODUCTION, LOSS OF OPPORTUNITY OR LOSS OF REPUTATION.

xylem
Let's Solve Water

Xylem Inc.
PO Box 5487
Lubbock, TX 79408
Phone: 1-806-763-7867
Fax: 1-800-453-4749
www.gouldswatertechnology.com

Goulds is a registered trademark of Goulds Pumps, Inc. and is used under license.
© 2017 Xylem Inc. IOMGWVITR02 August 2017

# Exhibit D – Pumping Unit Information

GOULDS WATER TECHNOLOGY a xylem brand

Downs Replacement Pumps
Quantity: Two (2)

# TURBINE SUBMITTAL

**Quote Number: 9001-170922-028:2**
**Model: VIT-FUFM**
**Size: 18LHXC 1 Stage(s)**

## OPERATING CONDITIONS

| | |
|---|---|
| Temp / SG | 70° F / SP.GR 1.00 |
| Fluid Type | Water |
| Lubrication Method | Oil (Enclosed Lineshaft) (Chevron Lubricating Oil FM 32 recommended) |
| Vapor Pressure | 0.3633 psi |
| Viscosity | 0.9695 cP |
| Specified Flow | 4488.00 USGPM |
| Total Dynamic Head | 24.00 ft |
| Pumping Level | 1.000 ft |
| TPL | 47.52 ft |
| Sump/Pit Depth | 53.500 ft |
| Documentation | Standard pump installation and operation manual and order data |

Updated 05/06/2020

## PERFORMANCE AT 1180 RPM

| | |
|---|---|
| Bowl Efficiency | 80.80 @design, 85.00 Best Efficiency |
| Run Out Capacity | 6.67 USGPM |
| Power | 33.40 @design, 50.70 NOL (Hp) **(50HP motor will be provided)** |
| Npshr | 14.90 ft @design |
| Design Thrust | 1424.60 @design (lb) |
| Shut off Pressure | 27.10 psi |

## MATERIALS AND DIMENSIONS

| | |
|---|---|
| Bowl | Epoxied Cast Iron |
| Suction Bell | Cast Iron CL30 |
| Bowl Wear Ring | 416SS |
| Impeller | Silicon Bronze C87610 |
| Impeller Diameter | 9.1875 inch |
| Impeller Balance | Dynamic Two-Plane Balance |
| Impeller Lock Method | Keyed Key Material 416SS |
| Bowl Shaft | 416SS, 2.4375 inch diam. |
| Suction Bearing | Grease Lubricated Bronze (Chevron FM Grease EP2 recommended) |
| Bowl Bearings | Bronze C90300 "G" Modified |
| Tube Bearing Adapter Material | Carbon Steel |
| Column | Carbon Steel,16" [.375 wall] (in) diam., 48.89 ft , Flanged with rabbett fits, Sections not to exceed 10 ft |
| Column Shaft Diameter | CS, 1.6875 (in) diam. |
| Lineshaft Bearings | Bronze C90300 "G" Modified |
| Max Bearing Space | 5 ft (1.5 m) Spacing |
| Lineshaft Coupling | Carbon Steel 1018 |
| Tube Material | Carbon Steel with support spacing at 20ft |
| Discharge Head | Carbon Steel Fab |
| Discharge Head Style | FU |
| Discharge Flange | 16" [406mm] (in), Plain End .375 wall |
| Head Shaft Coupling | 416SS Threaded |
| Head Bolting | Carbon steel |

Updated 07/06/2020

| | |
|---|---|
| Certified by | TSierra |
| Date of certification | 5/06/20 |
| Pump serial number | 4542117 |
| Project Name | Cawker City & Downs Pump Replacement |
| Tag: | Downs Units 1 & 2 |

GOULDS WATER TECHNOLOGY a xylem brand

Downs Replacement Pumps
Quantity: Two (2)

# TURBINE SUBMITTAL

**Quote Number: 9001-170922-028:2**
**Model: VIT-FUFM**
**Size: 18LHXC 1 Stage(s)**

| | |
|---|---|
| Sealing Method | Tension Plate |

## DRIVER INFORMATION

| | |
|---|---|
| Motor Type | Standard |
| Motor Manufacturer | US Motors |
| Rating | 50 Hp |
| Efficiency Level | PREM |
| Enclosure | WPI |
| Phase / Frequency / Volts | 3 / 60 Hz / 460PWS |
| Speed | 1200 RPM |

## TESTING

| | |
|---|---|
| Hydrostatic: | Hydrostatic Testing (Non-Witness): Bowl, Column and Head |
| Performance: | Performance Testing (Witness): Customer Motor, Bowl Assembly, HI 14.6 1U acceptance grade, Due to lab capabilities the complete pump cannot be tested in our lab. Testing will be on the bowl assembly with job motor only |

## COATING

| | |
|---|---|
| Coating Information: | SEE COATING SUBMITTAL |

## ADDITIONAL FEATURES

| | |
|---|---|
| Additional Bowl Features | PTI 25 Chrome Oxide Hardface >0.01" thick on bowlshaft @ bearing journals not less than 500 BHN |
| Additional Column Features | Lifting Lugs @ each Column Section<br>ASME BPVC IX Welding Only<br>Grease Lube Line to Suction (from head to suction tail bearing) Steel Pipe ASTM A53 |
| Additional Head Features: | Button Head Grease Fitting on Baseplate<br>Baseplate to match existing soleplate (dims to be verified)<br>Discharge to be a long radius elbow<br>Mating surfaces to be machined to .001" flat<br>Oiler with automatic 120V solenoid |
| Additional Driver Features: | Oversized Conduit Box<br>NW Complete Initial Test |
| Additional Misc features: | Field Service Representative - one day rate<br>Spare Parts - |

## WEIGHTS

Updated 05/06/2020

Updated 05/06/2020

| | |
|---|---|
| Total bowl weight | 1020 lbs |
| Total column weight | **5202** lbs |
| Discharge head weight | 1740.00 lbs |
| Driver weight | 1075.00 lbs |
| Approximate net weight | 9037.00 lbs |

**Our offer does not include specific review and incorporation of any Statutory or Regulatory Requirements and the offer is limited to the requirements of the design specifications. Should any Statutory or Regulatory requirements need to be reviewed and incorporated then the Customer is responsible to identify those and provide copies for review and revision of our offer.**

**Our quotation is offered in accordance with our comments and exceptions identified in our proposal and governed by our standard terms and conditions of sale – Xylem Americas attached hereafter.**

Updated 07/06/2020

| | |
|---|---|
| Certified by | TSierra |
| Date of certification | 5/06/20 |
| Pump serial number | 4542117 |
| Project Name | Cawker City & Downs Pump Replacement |
| Tag: | Downs Units 1 & 2 |

GOULDS WATER TECHNOLOGY
a xylem brand

# TURBINE SUBMITTAL

**Quote Number: 9001-170922-028:2**
**Model: VIT-FUFM**
**Size: 18LHXC 1 Stage(s)**

**For units requiring performance test, all performance tests will be conducted per ANSI/HI 14.6 standards unless otherwise noted in the selection software submittal documents. Test results meeting with grade 2B tolerances for pumps with a rated shaft power of 134HP or less and grade 1B for greater than 134HP will be considered passing.**

**Customer is responsible for verifying that the recommendations made and the materials selected are satisfactory for the Customer's intended environment and Customer's use of the selected pump. Customer is responsible for determining the suitability of Xylem recommendations for all operating conditions within Customer's and/or End User's control. Xylem disclaims all warranties, express or implied warranties, including, but not limited to, warranties of merchantability and fitness for a particular purpose and all express warranties other than the limited express warranty set forth in the attached standard terms and conditions of sale – Xylem Americas attached hereafter.**

**Xylem does not guarantee any pump intake configuration. The hydraulic and structural adequacies of these structures are the sole responsibility of the Customer or his representatives. Further, Xylem accepts no liabillty arising out of unsatisfactory pump intake field operating conditions.**

**The Customer or his representatives are referred to the Hydraulic Institute Standards for recommendations on pump intake design. To optimize the hydraulic design of a field pump intake configuration, the Customer should strongly consider performing a detailed scale model pump intake study. However, the adequacies of these recommendations are the sole responsibillty of the Customer.**

Updated 07/06/2020

| | |
|---|---|
| Certified by | TSierra |
| Date of certification | 5/06/20 |
| Pump serial number | 4542117 |
| Project Name | Cawker City & Downs Pump Replacement |
| Tag: | Downs Units 1 & 2 |

GOULDS WATER TECHNOLOGY a xylem brand

Downs Replacement Pumps
Quantity: Two (2)

# HYDRAULIC ANALYSIS

**Quote Number: 9001-170922-028:2**
**Model: VIT-FUFM**
**Size: 18LHXC 1 Stage(s)**

Updated 05/06/2020

## OVERALL PUMP PARAMETERS

| | | | |
|---|---|---|---|
| Capacity: | 4488.00 USGPM | Total Dynamic Head: | 24.00 ft |
| Total Pump Length: | 47.52 ft | Impeller Trim: | 9.1875 inch |
| Pump Type: | VIT - Short Set Lineshaft Turbine Pumps | Head Type: | Type FU (Fabricated U-Underground Head) |
| Pump K-Factor: | 36.8000 lbs/ft | Number of Stages: | 1 |
| Additional Pump K-Factor: | 36.8000 lbs/ft | Pumping Level: | 1.000 ft |
| Pump Operating Speed [RPM]: | 1180 | | |

## LINE SHAFT RELATED DATA

| | | | |
|---|---|---|---|
| Shaft Diameter: | 1.6875 inch | Shaft Limit : | 213 Hp |
| Shaft Material: | CS | Material Correction Fact: | 1.00 |
| Line Shaft Length: | 586.63 inch | Shaft Elongation: | 0.00810 inch |
| Line Shaft Type: | Oil (Enclosed Lineshaft) | Impeller Running Clearance: | 0.13 inch |

## BOWL DATA

| | | | |
|---|---|---|---|
| Total Bowl Length: | 43.88 inch | Bowl Shaft Limit: | 606 Hp |
| Bowl Shaft Diameter: | 2.4375 inch | Bowl Shaft Material: | 416SS |
| Bowl Diameter: | 23.500 inch | | |

## COLUMN DATA

| | | | |
|---|---|---|---|
| Column Diameter: | 16 inch | Column Elongation: | 0.00000 inch |
| Column Wall Thickness: | 0.370 inch | Shut Off Column Elongation: | 0.00000 inch |
| Column Load: | 756.40 lb | | |

## HORSEPOWER DATA

| | | | |
|---|---|---|---|
| Shaft Friction Loss: | 0.44735 Hp | Thrust Load Loss: | 0.12315 Hp |
| Bowl Hp at Design: | 33 Hp | Rating: | 50 Hp |

## OTHER DATA

| | | | |
|---|---|---|---|
| Hydraulic Thrust: | 883.10 lb | Thrust at Design: | 1424.60 lb |
| Thrust at Shut Off: | 2884.94 lb | Actual Head Above Grade: | 21.29 ft |
| Available Lateral: | 1.12 inch | Design Lateral: | 0.13810 inch |
| Shut Off Lateral: | 0.15182 inch | | |
| Suction Head: | 0.00 ft | Shut Off Discharge Pressure: | 27.10 psi |
| Column Loss: | 0.70 ft | NPSH Actual: | 30.90 ft |
| Head Loss: | 1.01 ft | NPSHr: | 14.90 ft @design |
| Total Loss: | 1.71 ft | NPSH Margin: | 16.00 ft |

## EFFICIENCY DATA

| | | | |
|---|---|---|---|
| Bowl Efficiency: | 85.00 % | Overall Efficiency: | 69.70 % |
| Motor Efficiency: | 94.50 % | KWH per 1000 gallons: | 0.11 |
| Pump Efficiency: | 73.80 % | | |

## FLUID DATA

| | | | |
|---|---|---|---|
| Fluid Type: | Water | Specific Gravity: | 0.9999 |
| Temperature: | 70°F | Viscosity: | 0.9695 cP |

## COMPONENT WEIGHTS

| | | | |
|---|---|---|---|
| Bowl Weight: | 1020 lbs | Column Weight: | 5202 lbs |
| Head Weight: | 1740 lbs | Can Weight: | 0 lbs |
| Driver Weight: | 1075 lbs | Total Pump Weight: | 9037 lbs |

Updated 07/06/2020

Updated 05/06/2020

| | |
|---|---|
| Certified by | Tsierra |
| Date of certification | 5/06/20 |
| Pump serial number | 4542117 |
| Project Name | Cawker City & Downs Pump Replacment |
| Tag | Downs Units 1 & 2 |

GOULDS WATER TECHNOLOGY a xylem brand

# Downs Replacement Pumps
## Quantity: Two (2)

# OUTLINE DRAWING

**Quote Number: 9001-170922-028:2**
**Model: VIT-FUFM**
**Size: 18LHXC 1 Stage(s)**

Updated 05/06/2020

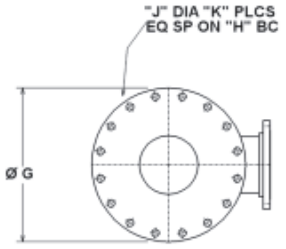


DISC HEAD

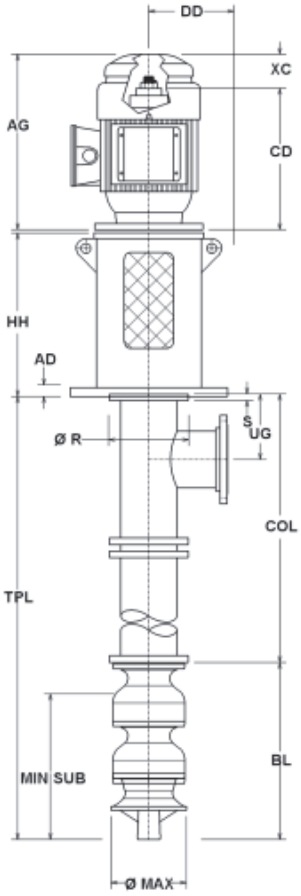


## DIMENSIONS

| | | |
|---|---|---|
| AD | 1.94 | inch |
| AG | 42.69 | inch |
| BD | 16.5 | inch |
| BL | 43.88 | inch |
| CD | 36.94 | inch |
| COL | 526.38 | inch |
| DD | 30.00 | inch |
| MIN SUB | 37.18 | inch |
| DH | 24.00 | inch |
| G | NA | inch |
| H | NA | inch |
| HH | 24.00 | inch |
| J | NA | inch |
| R | 0.00 | inch |
| S | 0.00 | inch |
| TPL | 570.25 | inch |
| UG | 48.38 | inch |
| XC | 5.50 | inch |
| Max Dia | 23.50 | inch |
| Discharge | 16" Plain End | inch |

## Weights

| | | |
|---|---|---|
| Total bowl | 1020.00 | lb |
| Total column | 5202.00 | lb |
| Discharge head | 1740.00 | lb |
| Driver | 1075.00 | lb |
| Approx weight | 9037.00 | lb |

## PUMP DATA

| | |
|---|---|
| No. of Units | 1.00 |
| Model: | VIT-FUFM 18LHXC |
| Stages: | 1 |
| Col Size: | 16" [406mm] |
| Shaft: | 1.6875 in dia |
| Flow: | 4488.00 USGPM |
| Head: | 24.00 ft |
| Driver Mfr: | US Motors |
| Driver Type: | VHS |
| Rating: | 50 Hp |
| Speed: | 1200 RPM |
| Phase: | 3 |
| Frequency: | 60 Hz |
| Voltage: | 460PWS |

Updated 05/06/2020

| No. | NOTES |
|---|---|
| 1 | *Total Pump Length ± 1.0 inch.* |
| 2 | *Tolerance on all dimensions is .12 or ± .12 inch per 5 ft, whichever is greater.* |
| 3 | *All dimensions shown are in inches unless otherwise specified.* |
| 4 | *Drawing not to scale.* |
| 5 | *½" NPT – Gauge Conn (plugged)* |
| 6 | *Driver may be rotated at 90° intervals about vertical centerline for details refer to driver dimension drawing.* |
| 7 | *Refer to product IOM for impeller setting requirements.* |
| 8 | *This assembly has been designed so that its natural frequency responses avoid the specific operating speeds by an adequate safety margin. The design has assumed the foundation to be rigid.* |

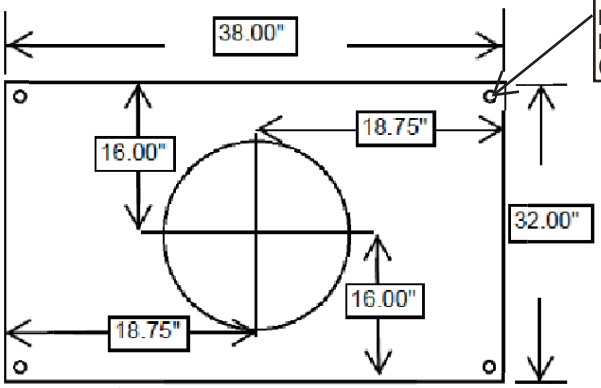


The cL of each mounting hole to each edge of the baseplate will be 1.5" (typ 4)

Updated 07/06/2020

| | |
|---|---|
| Certified by | Tsierra |
| Date of certification | 5/06/20 |
| Pump serial number | 4542117 |
| Project Name | Cawker City & Downs Pump Replacement |
| Tag | Downs Units 1 & 2 |

New Addition

**VIT-FF ELS Layout**

CS.F047
Rev 0
4/14/2003

**Customized Drawing for SO:** 4777487 **Date:** 4 / 24 / 2020 **Authorized by:** HAMMOCK

**No of Units:** 2

Downs Pump Replacement

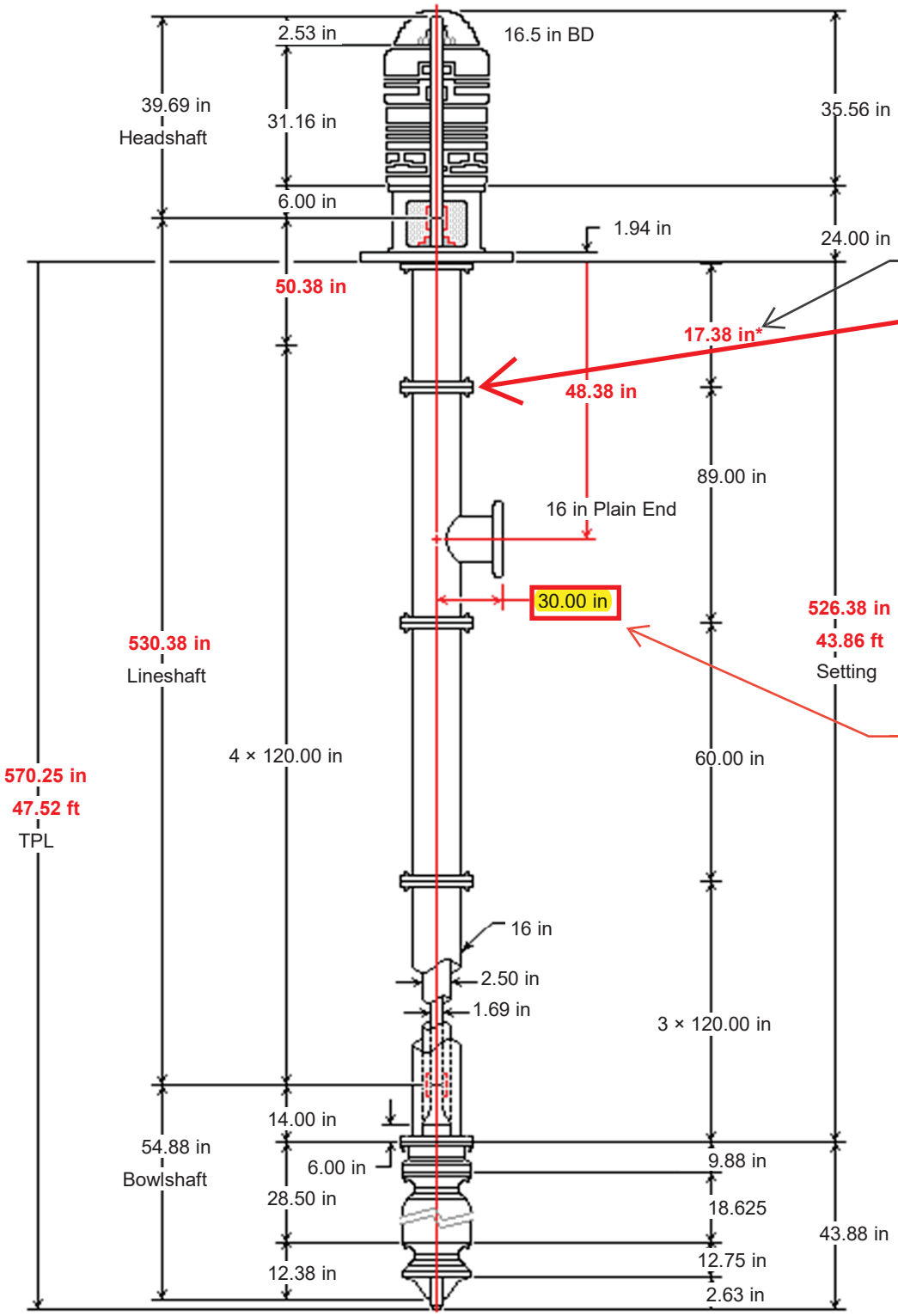


Dimension includes a 3.38" machined spacer per drawing# E00432b_sub and located between bottom flange of the upper-most column section, and the top flange of the discharge column section.

*This pump does not include a strainter.

*Approximate distance from the bowl to the floor is ~12.87"

Updated 05/06/2020

Comment 16×18LX/1-STG

New Addition

VIT-FF ELS Layout

CS.F047
Rev 0
4/14/2003

**Customized Drawing for SO:** 4777487 **Date:** 4 / 24 / 2020 **Authorized by:** HAMMOCK

**No of Units:** 2

Downs Pump Replacement

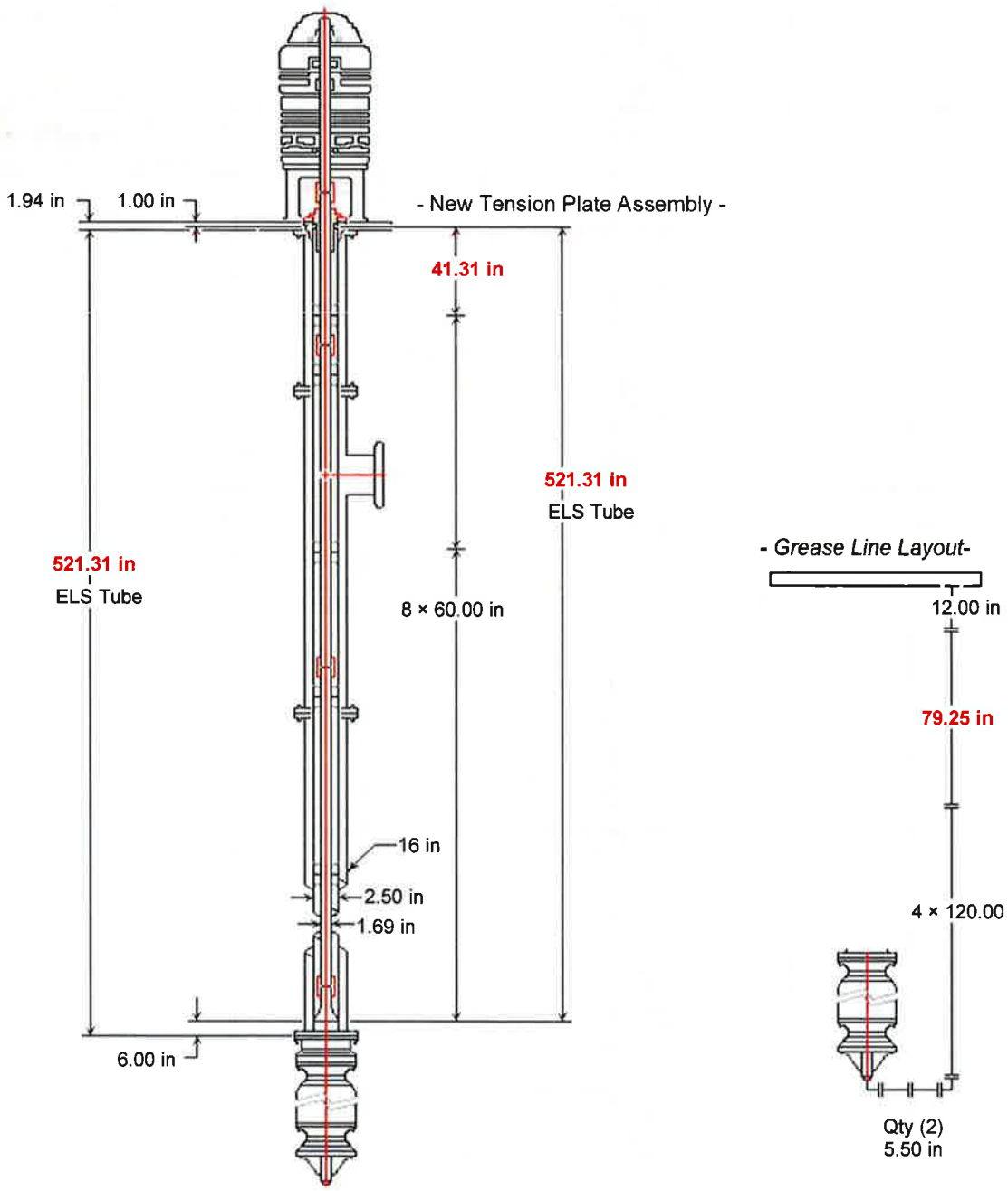


Comment 16×18LX/1-STG

New Addition

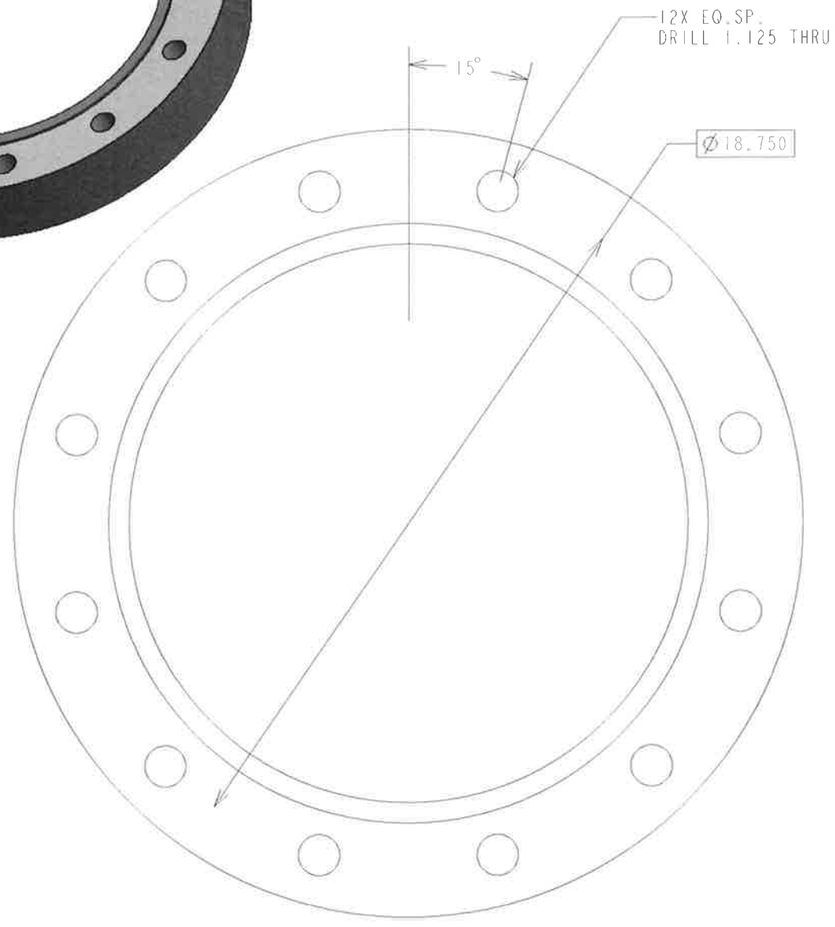


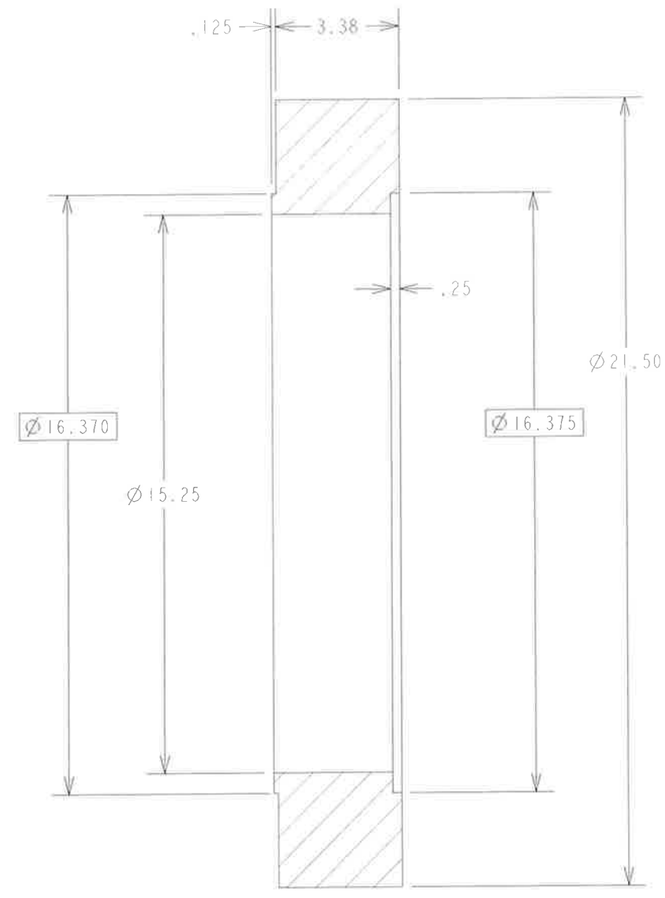


THIS DRAWING IS THE PROPERTY OF TEXAS TURBINE OPERATIONS, LUBBOCK TEXAS USA AND SHALL NOT EXCEPT UPON WRITTEN PERMISSION OF TEXAS TURBINE OPERATIONS BE USED FOR ANY PURPOSE EXCEPT THE MANUFACTURE OF ARTICLES FOR TEXAS TURBINE OPERATIONS. DRAWINGS TO BE RETURNED ON REQUEST.

| | |
|---|---|
| PART | PLATE SPACER 16" COLUMN X 3.38" LONG |
| MODEL | TURB |
| THIRD ANGLE PROJECTION | |
| TEXAS TURBINE OPERATIONS LUBBOCK, TX U.S.A | |
| DRAWING NO | E00432B_SUB |
| REV | 0 |
| SHEET | 1 OF 1 |

ProE

GOULDS WATER TECHNOLOGY a xylem brand

Downs Replacement Pumps
Quantity: Two (2)

# CROSS SECTIONAL

**Quote Number: 9001-170922-028:2**
**Model: VIT-FUFM**
**Size: 18LHXC 1 Stage(s)**

## BILL OF MATERIAL

| ITEM | Part Name | CODE | MATERIAL | ASTM# |
|---|---|---|---|---|
| **Discharge Head Assembly** | | | | |
| 600 | Head – Discharge | 9645 | Carbon Steel Fab | A53 |
| 602 | Head – Base Plate | N/A | Not Included | N/A |
| 604 | Nut – Adjusting | 2242 | Carbon Steel 1018 | A108-99 |
| 608 | Headshaft | 2227 | 416SS | A582M-95b |
| 616 | Housing | 1003 | Cast Iron CL30 | A48-94-ae1 |
| 617 | Bearing-Housing | 1109 | Bronze C90300 "G" Modified | B584-00 |
| 623 | Nut-Tension | 2242 | Carbon Steel 1018 | A108-99 |
| 625 | Tension Plate | 1003 | 1003 | A48-94-ae1 |
| 630 | Reservoir-Oil | 1425 | Alum 316 | B179-96 |
| 730 | Key-Motor Gib | 2242 | Carbon Steel 1018 | A108-99 |
| 779 | Gasket-Housing | 5136 | Acrylic/Nitrile | 5136 Rev 4 |
| **Column and Lineshaft Assembly** | | | | |
| 637 | Hanger Flange | N/A | Not Included | N/A |
| 642 | Column Pipe | 9645 | Carbon Steel | A53 |
| 645 | Column-Coupling | N/A | Not Applicable | N/A |
| 646 | Lineshaft | 2205 | CS | A108-99 |
| 649 | Lineshaft Coupling | 2242 | Carbon Steel 1018 | A108-99 |
| 652 | Retainer-Bearing | N/A | Not Applicable | N/A |
| 654 | Tube-Enclosing | 6518 | Carbon Steel | A53-98 |
| 656 | Lineshaft Bearing | 1109 | Bronze C90300 "G" Modified | B584-00 |
| 760 | Capscrew-Hex | 2298 | Steel Bolting Gr8 | J429-99 |
| **Bowl Assembly** | | | | |
| 658 | Retainer-Tube | 5121 | Rubber EPDM | D356898 |
| 660 | Bowl-Shaft | 2227 | 416SS | A582M-95b |
| 664 | Bearing – Disc Bowl | N/A | None | N/A |
| 668 | Bearing Tube Adapt | N/A | Carbon Steel | N/A |
| 670 | Bowl-Inter | 5853 | Cast Iron CL30 Epoxy | A48-94e1 |
| 672 | Bearing-Int Bowl | 1109 | Bronze C90300 "G" Modified | B584-00 |
| 673 | Impeller | 1398 | Silicon Bronze C87610 | B584-00 |
| 677 | Collet-Impeller | N/A | None | N/A |
| 674 | Key-Impeller | 2217 | 416SS | A582M-95B |
| 680 | Wear Ring-Bowl | 1299 | 416SS | A743M-98ae1 |
| 681 | Wear Ring-Impeller | N/A | Not Included | N/A |
| 688 | Bell-Suction | 690 | Cast Iron CL30 | 1003 |
| 690 | Bearing-Suction | 1109 | Bronze C90300 "G" Modified | |
| | Sandcollar | 1205 | 304SS | A744M-00 |
| 698 | Strainer Type | N/A | None | N/A |
| 760 | Capscrew-Hex | 2298 | Steel Bolting Gr8 | J429-99 |

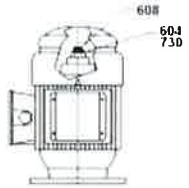


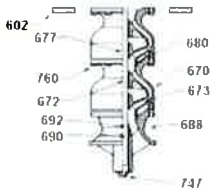


| DO NOT USE FOR CONSTRUCTION UNLESS CERTIFIED | |
|---|---|
| Certified by | |
| Date of certification | |
| Pump serial number | |
| Project Name | Cawker City & Downs Pumps |
| Tag | |

GOULDS WATER TECHNOLOGY a xylem brand

Downs Replacement Pumps
Quantity: Two (2)

# PERFORMANCE CURVE

**Quote Number: 9001-170922-028:2**
**Model: VIT-FUFM**
**Size: 18LHXC 1 Stage(s)**

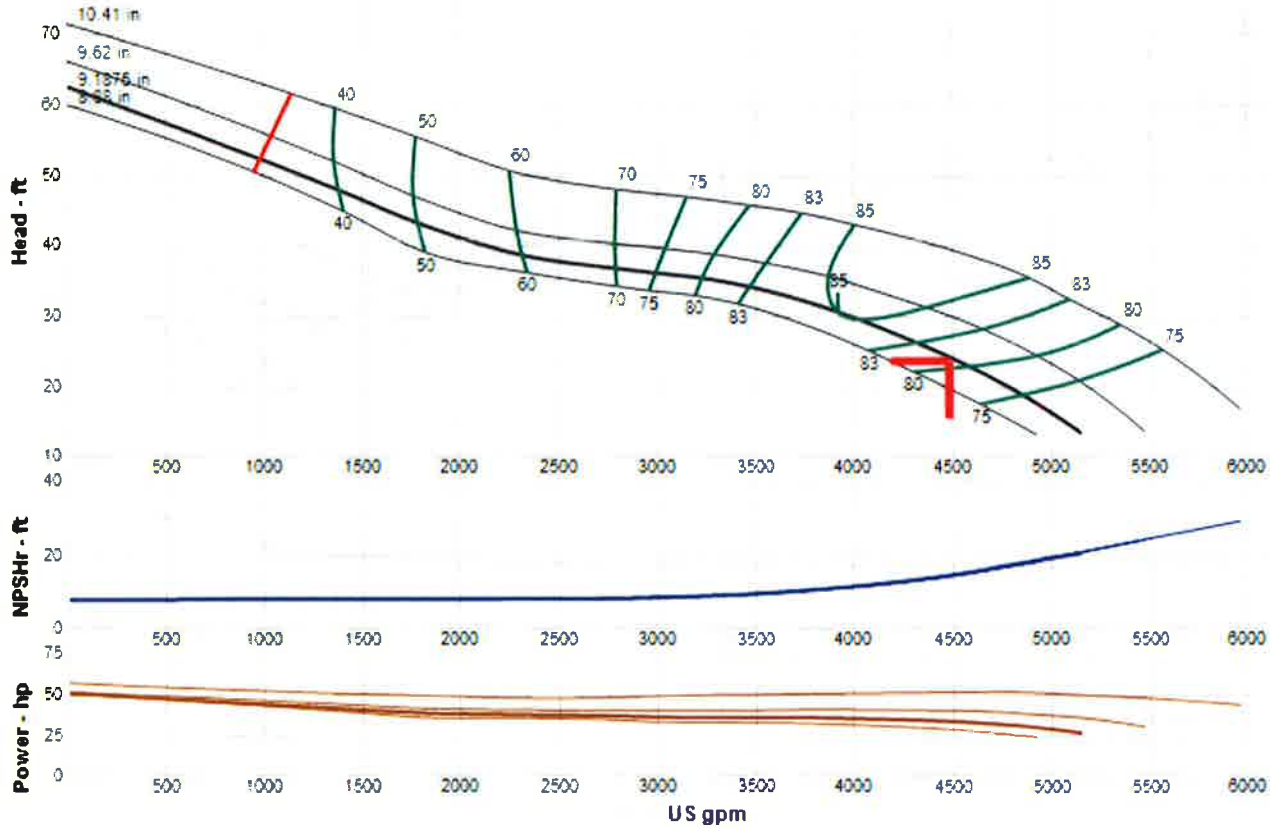


| | | | |
|---|---|---|---|
| Driver Size Criteria: | Max power on design curve (NOL) | Best Efficiency: | 85.00 % |
| Speed: | 1180 | Flow at BEP: | 3917.00 USGPM |
| Impeller Trim: | 9.1875 inch | Min Flow: | 979.00 USGPM |
| Frequency: | 60 Hz | Derate Factor: | 0.0000 |
| Additional Impeller Trim: | 9.188 inch | NPSH Required: | 14.90 ft |
| Impeller Maximum Trim: | 10.4100 inch | NPSH Actual: | 30.90 ft |
| Specified Flow: | 4488.00 USGPM | Shut-Off Head: | 62.60 ft |
| Specified Head: | 23.50 ft | Fluid Type: | Water |
| Head at Design: | 24.00 ft | Temperature / Specifc Gravity: | 70°F / 1.00 |
| Efficiency at Design: | 80.80 % | Viscosity: | 0.9695 cP |
| Power at Design: | 33.40 Hp | Allowable Sphere Size: | 1.88 inch |
| Flow on Design Trim at Max Power: | 8 USGPM | Thrust K Factor: | 36.8000 lbs/ft |
| Max Power on Design Curve: | 50.70 Hp **(50HP motor will be provided)** | Additional Thrust K Factor: | 36.8000 lbs/ft |
| Run-Out Flow: | 0.00 USGPM | Max Lateral: | 1.12 inch |
| Run-Out Head: | 0 ft | | |

Updated 07/06/2020

| | |
|---|---|
| Certified by | Tsierra |
| Date of certification | 5/06/20 |
| Pump serial number | 4542117 |
| Project Name | Cawker City & Downs Pump Replacement |
| Tag | Downs Units 1 & 2 |

# 400 & RC400
# COUPLINGS

## SUBMITTAL INFORMATION

Quantity 4, Total

## MATERIALS

**END RINGS & CENTER RING**
The end rings and center ring are made from ASTM A 36 steel.

**GASKETS**
Nitrile Butadiene Rubber (NBR) compounded for water and sewer service also resistant to hyprocarbons. Meeting the requirements of ASTM D 2000. Other compounds available on request.

**BOLTS AND NUTS**
High strength low alloy steel bolts and nuts. Steel meets AWWA Standard C111. Type 304 and 316. Stainless Steel bolt material optional.

**COATINGS**
Shop coat applied to parts for corrosion protection in transit. Fusion bonded epoxy, liquid epoxy and other coatings available on request.

## PRESSURE

When properly installed on a pipe that is within the coupling manufacturer's tolerances, couplings in the Romac Style 400 line may typically be used at 150 psi working pressure. Higher working pressures can easily be accommodated . Please consult Romac literature for special applications.

## STANDARD

The Romac Series 400 style couplings meets all specifications set forth in the AWWA Standard C219.

## SIZES & RANGES

See catalog.

Document # 30-8-0002 1/17

*This information is based on the best data available at the date printed above. Please check with Romac for any updates or changes.*

ROMAC INDUSTRIES, INC.
www.romac.com
21919 20th Avenue SE • Suite 100 • Bothell, WA 98021
Phone (425) 951-6200 • 1-800-426-9341 • Fax (425) 951-6201

# STYLE 400 STEEL COUPLING
## (FOR 12" AND LARGER PIPE)

ROMAC INDUSTRIES, INC.

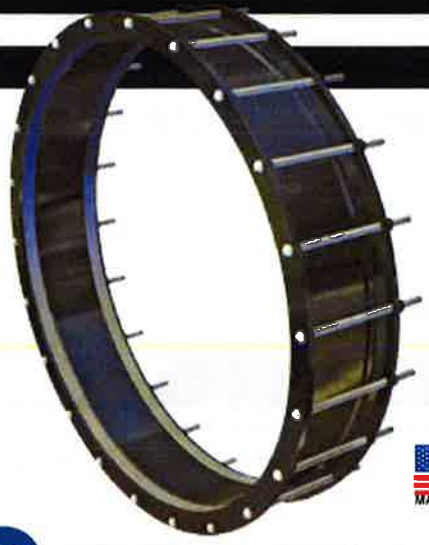

## MATERIAL SPECIFICATIONS

**CENTER RINGS:** Beveled, flared or formed carbon steel with minimum yield of 30,000 PSI.

**END RINGS:** Contoured rolled mill section carbon steel. End-ring thickness determined by pipe O.D. and pressure rating.

**GASKETS:** Compounded for water and sewer service. Meets the requirements of AWWA C219 and ASTM D2000. Other compounds available on request.

**BOLTS AND NUTS:** Trackhead bolts, heavy hex nuts, 5/8" UNC rolled thread, high strength, low alloy corrosion-resistant steel per AWWA C111. Threads protected with plastic caps on each bolt end.

**PAINT:** Romac shopcoat for corrosion protection in transit.

**SPECIALS:** Center ring length and thickness not shown, special linings and coatings desired, diameters and pressure ratings not shown. Prices and availablility on request.

**OPTIONS:** Available for pipe sizes 12" - 200". ~~For other options and specifications, see page 3-25 & 3-26.~~

**USE:** To flexibly couple pipe of the same diameters. See Style TC400 on Page 3-23 for limited range if O.D. is not known.

Style 400 Couplings comply with the requirement of AWWA C219.

MADE IN U.S.A.

NSF61 certified upon request.

**MEETS AWWA C219**

*For restrained "400" steel couplings, see page 8-10*

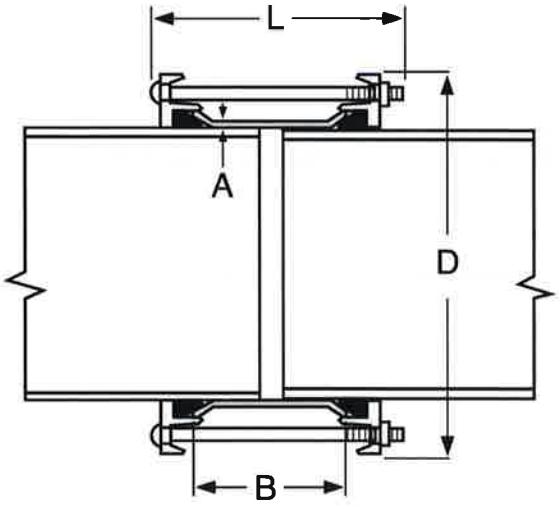


### DIMENSIONS
**Reference charts on following pages**

**A** Center ring thickness

**B** Center ring length

**D** Overall coupling diameter

**L** Overall coupling length.

WARNING: Flexible couplings do not provide protection against possible pullout of pipe ends in unrestrained conditions.

**TO ORDER:** Determine pipe size, center ring thickness and length. Any special gaskets, linings and coatings, or nuts and bolts should be described in full.

**EXAMPLE:** To couple 16" O.D. steel pipe with a coupling wall thickness of .250 and 7" long, order **400-16.00-1**

ROMAC INDUSTRIES, INC.

# STYLE 400 STEEL COUPLING (FOR 12" AND LARGER PIPE)

## STYLE 400 STEEL COUPLINGS FOR JOINING PLAIN-END PIPE TO PLAIN-END PIPE

| NOM. PIPE SIZE | OUTSIDE DIAMETER O.D. | CENTER RING (A) × (B) | CATALOG NUMBER | LIST PRICE SHOPCOAT w/STD | SHOPCOAT w/304 | SHOPCOAT w/316 | FUSION EPOXY w/STD | FUSION EPOXY w/304 | FUSION EPOXY w/316 | BOLT NO : SIZE | OVERALL LENGTH (L) |
|---|---|---|---|---|---|---|---|---|---|---|---|
| 12" | 13.20 | 1/4" x 7" | 400-13.20-1 | | | | | | | 8: 5/8" x 11 1/2" | 12" |
| | 13.20 | 1/4" x 10" | 400-13.20-1A | | | | | | | 8: 5/8" x 15" | 15 1/2" |
| | 13.20 | 3/8" x 7" | 400-13.20-2 | | | | | | | 8: 5/8" x 11 1/2" | 12" |
| | 13.20 | 3/8" x 10" | 400-13.20-3 | | | | | | | 8: 5/8" x 15" | 15 1/2" |
| 14" | 14.00 | 1/4" x 7" | 400-14.00-1 | | | | | | | 8: 5/8" x 11 1/2" | 12" |
| | 14.00 | 1/4" x 10" | 400-14.00-1A | | | | | | | 8: 5/8" x 15" | 15 1/2" |
| | 14.00 | 3/8" x 7" | 400-14.00-2 | | | | | | | 8: 5/8" x 11 1/2" | 12" |
| | 14.00 | 3/8" x 10" | 400-14.00-3 | | | | | | | 8: 5/8" x 15" | 15 1/2" |
| | 15.30 | 1/4" x 7" | 400-15.30-1 | | | | | | | 10: 5/8" x 11 1/2" | 12" |
| | 15.30 | 1/4" x 10" | 400-15.30-1A | | | | | | | 10: 5/8" x 15" | 15 1/2" |
| | 15.30 | 3/8" x 7" | 400-15.30-2 | | | | | | | 10: 5/8" x 11 1/2" | 12" |
| | 15.30 | 3/8" x 10" | 400-15.30-3 | | | | | | | 10: 5/8" x 15" | 15 1/2" |
| 16" | 16.00 | 1/4" x 7" | 400-16.00-1 | | | | | | | 10: 5/8" x 11 1/2" | 12" |
| | 16.00 | 1/4" x 10" | 400-16.00-1A | | | | | | | 10: 5/8" x 15" | 15 1/2" |
| | 16.00 | 3/8" x 7" | 400-16.00-2 | | | | | | | 10: 5/8" x 11 1/2" | 12" |
| | 16.00 | 3/8" x 10" | 400-16.00-3 | | | | | | | 10: 5/8" x 15" | 15 1/2" |
| | 17.40 | 1/4" x 7" | 400-17.40-1 | | | | | | | 10: 5/8" x 11 1/2" | 12" |
| | 17.40 | 1/4" x 10" | 400-17.40-1A | | | | | | | 10: 5/8" x 15" | 15 1/2" |
| | 17.40 | 3/8" x 7" | 400-17.40-2 | | | | | | | 10: 5/8" x 11 1/2" | 12" |
| | 17.40 | 3/8" x10" | 400-17.40-3 | | | | | | | 10: 5/8" x 15" | 15 1/2" |
| 18" | 18.00 | 1/4" x 7" | 400-18.00-1 | | | | | | | 10: 5/8" x 11 1/2" | 12" |
| | 18.00 | 1/4" x 10" | 400-18.00-1A | | | | | | | 10: 5/8" x 15" | 15 1/2" |
| | 18.00 | 3/8" x 7" | 400-18.00-2 | | | | | | | 10: 5/8" x 11 1/2" | 12" |
| | 18.00 | 3/8" x 10" | 400-18.00-3 | | | | | | | 10: 5/8" x 15" | 15 1/2" |
| | 19.50 | 1/4" x 7" | 400-19.50-1 | | | | | | | 12: 5/8" x 11 1/2" | 12" |
| | 19.50 | 1/4" x10" | 400-19.50-1A | | | | | | | 12: 5/8" x 15" | 15 1/2" |
| | 19.50 | 3/8" x 7" | 400-19.50-2 | | | | | | | 12: 5/8" x 11 1/2" | 12" |
| | 19.50 | 3/8" x 10" | 400-19.50-3 | | | | | | | 12: 5/8" x 15" | 15 1/2" |
| 20" | 20.00 | 1/4" x 7" | 400-20.00-1 | | | | | | | 12: 5/8" x 11 1/2" | 12" |
| | 20.00 | 1/4" x 10" | 400-20.00-1A | | | | | | | 12: 5/8" x 15" | 15 1/2" |
| | 20.00 | 3/8" x 7" | 400-20.00-2 | | | | | | | 12: 5/8" x 11 1/2" | 12" |
| | 20.00 | 3/8" x 10" | 400-20.00-3 | | | | | | | 12: 5/8" x 15" | 15 1/2" |
| | 21.60 | 1/4" x 7" | 400-21.60-1 | | | | | | | 12: 5/8" x 11 1/2" | 12" |
| | 21.60 | 1/4" x 10" | 400-21.60-1A | | | | | | | 12: 5/8" x 15" | 15 1/2" |
| | 21.60 | 3/8" x 7" | 400-21.60-2 | | | | | | | 12: 5/8" x 11 1/2" | 12" |
| | 21.60 | 3/8" x 10" | 400-21.60-3 | | | | | | | 12: 5/8" x 15" | 15 1/2" |
| 22" | 22.00 | 1/4" x 7" | 400-22.00-1 | | | | | | | 12: 5/8" x 11 1/2" | 12" |
| | 22.00 | 1/4" x 10" | 400-22.00-1A | | | | | | | 12: 5/8" x 15" | 15 1/2" |
| | 22.00 | 3/8" x 7" | 400-22.00-2 | | | | | | | 12: 5/8" x 11 1/2" | 12" |
| | 22.00 | 3/8" x 10" | 400-22.00-3 | | | | | | | 12: 5/8" x 15" | 15 1/2" |
| 24" | 24.00 | 1/4" x 7" | 400-24.00-1 | | | | | | | 14: 5/8" x 11 1/2" | 12" |
| | 24.00 | 1/4" x 10" | 400-24.00-1A | | | | | | | 14: 5/8" x 15" | 15 1/2" |
| | 24.00 | 3/8" x 7" | 400-24.00-2 | | | | | | | 14: 5/8" x 11 1/2" | 12" |
| | 24.00 | 3/8" x 10" | 400-24.00-3 | | | | | | | 14: 5/8" x 15" | 15 1/2" |

**Other sizes available. Price on application.**

Large Size Style 400 Couplings are No Cancel, No Return Items.

WARNING: Flexible couplings do not provide protection against possible pullout of pipe ends in unrestrained conditions.

ROMAC INDUSTRIES, INC.

# GENERAL INFORMATION FOR 400 SERIES COUPLINGS

Engineering data, such as end ring design and gasket size, may differ according to specific need and pressures. The table below is for general submittal information only for the diameters listed and the working pressures indicated. Requirements not shown in the following table will be engineered specifically for your needs upon request.

| NOM. PIPE SIZE | OUTSIDE DIAMETER O.D. | CENTER RING (A) x (B) | MAX PSI WORK PRESS. | OVERALL DIAMETER (D) | LENGTH OVERALL (L) | APPROX. WEIGHT (lbs.) |
|---|---|---|---|---|---|---|
| 12" | 13.20 | 1/4" x 7" | 390 | 17.5 | 12" | 65 # |
| | 13.20 | 1/4" x 10" | 390 | | 15 1/2" | 77 # |
| | 13.20 | 3/8" x 7" | 390 | | 12" | 76 # |
| | 13.20 | 3/8" x 10" | 390 | | 15 1/2" | 92 # |
| 14" | 14.00 | 1/4" x 7" | 368 | 18.3 | 12" | 68 # |
| | 14.00 | 1/4" x 10" | 368 | | 15 1/2" | 80 # |
| | 14.00 | 3/8" x 7" | 368 | | 12" | 79 # |
| | 14.00 | 3/8" x 10" | 368 | | 15 1/2" | 96 # |
| | 15.30 | 1/4" x 7" | 423 | 19.6 | 12" | 75 # |
| | 15.30 | 1/4" x 10" | 423 | | 15 1/2" | 88 # |
| | 15.30 | 3/8" x 7" | 423 | | 12" | 87 # |
| | 15.30 | 3/8" x 10" | 423 | | 15 1/2" | 106 # |
| 16" | 16.00 | 1/4" x 7" | 405 | 20.3 | 12" | 77 # |
| | 16.00 | 1/4" x 10" | 405 | | 15 1/2" | 91 # |
| | 16.00 | 3/8" x 7" | 405 | | 12" | 90 # |
| | 16.00 | 3/8" x 10" | 405 | | 15 1/2" | 110 # |
| | 17.40 | 1/4" x 7" | 374 | 21.7 | 12" | 82 # |
| | 17.40 | 1/4" x 10" | 374 | | 15 1/2" | 97 # |
| | 17.40 | 3/8" x 7" | 374 | | 12" | 96 # |
| | 17.40 | 3/8" x10" | 374 | | 15 1/2" | 117 # |
| 18" | 18.00 | 1/4" x 7" | 362 | 22.3 | 12" | 84 # |
| | 18.00 | 1/4" x 10" | 362 | | 15 1/2" | 100 # |
| | 18.00 | 3/8" x 7" | 362 | | 12" | 99 # |
| | 18.00 | 3/8" x 10" | 362 | | 15 1/2" | 121 # |
| | 19.50 | 1/4" x 7" | 402 | 23.8 | 12" | 92 # |
| | 19.50 | 1/4" x10" | 402 | | 15 1/2" | 109 # |
| | 19.50 | 3/8" x 7" | 402 | | 12" | 108 # |
| | 19.50 | 3/8" x 10" | 402 | | 15 1/2" | 131 # |
| 20" | 20.00 | 1/4" x 7" | 392 | 24.3 | 12" | 94 # |
| | 20.00 | 1/4" x 10" | 392 | | 15 1/2" | 111 # |
| | 20.00 | 3/8" x 7" | 392 | | 12" | 110 # |
| | 20.00 | 3/8" x 10" | 392 | | 15 1/2" | 134 # |
| | 21.60 | 1/4" x 7" | 364 | 25.9 | 12" | 99 # |
| | 21.60 | 1/4" x 10" | 364 | | 15 1/2" | 118 # |
| | 21.60 | 3/8" x 7" | 364 | | 12" | 117 # |
| | 21.60 | 3/8" x 10" | 364 | | 15 1/2" | 143 # |
| 22" | 22.00 | 1/4" x 7" | 357 | 26.3 | 12" | 101 # |
| | 22.00 | 1/4" x 10" | 357 | | 15 1/2" | 120 # |
| | 22.00 | 3/8" x 7" | 357 | | 12" | 118 # |
| | 22.00 | 3/8" x 10" | 357 | | 15 1/2" | 145 # |
| 24" | 24.00 | 1/4" x 7" | 333 | 28.3 | 12" | 110 # |
| | 24.00 | 1/4" x 10" | 333 | | 15 1/2" | 131 # |
| | 24.00 | 3/8" x 7" | 386 | | 12" | 129 # |
| | 24.00 | 3/8" x 10" | 386 | | 15 1/2" | 158 # |
| | 25.80 | 1/4" x 7" | 310 | 30.1 | 12" | 117 # |
| | 25.80 | 1/4" x 10" | 310 | | 15 1/2" | 138 # |
| | 25.80 | 3/8" x 7" | 360 | | 12" | 137 # |
| | 25.80 | 3/8" x 10" | 360 | | 15 1/2" | 168 # |

**Note:** See page 3-25 for options and application data.

| NOM. PIPE SIZE | OUTSIDE DIAMETER O.D. | CENTER RING (A) x (B) | MAX PSI WORK PRESS. | OVERALL DIAMETER (D) | LENGTH OVERALL (L) | APPROX. WEIGHT (lbs.) |
|---|---|---|---|---|---|---|
| 26" | 26.00 | 1/4" x 7" | 307 | 30.40 | 12" | 117 # |
| | 26.00 | 1/4" x 10" | 307 | | 15 1/2" | 139 # |
| | 26.00 | 3/8" x 7" | 357 | | 12" | 138 # |
| | 26.00 | 3/8" x 10" | 357 | | 15 1/2" | 169 # |
| 28" | 28.00 | 1/4" x 7" | 285 | 32.40 | 12" | 127 # |
| | 28.00 | 1/4" x 10" | 285 | | 15 1/2" | 151 # |
| | 28.00 | 3/8" x 7" | 380 | | 12" | 149 # |
| | 28.00 | 3/8" x 10" | 380 | | 15 1/2" | 182 # |
| 30" | 30.00 | 1/4" x 7" | 266 | 34.40 | 12" | 134 # |
| | 30.00 | 1/4" x 10" | 266 | | 15 1/2" | 159 # |
| | 30.00 | 3/8" x 7" | 354 | | 12" | 158 # |
| | 30.00 | 3/8" x 10" | 354 | | 15 1/2" | 193 # |
| | 32.00 | 1/4" x 7" | 250 | 36.40 | 12" | 141 # |
| | 32.00 | 1/4" x 10" | 250 | | 15 1/2" | 168 # |
| | 32.00 | 3/8" x 7" | 333 | | 12" | 166 # |
| | 32.00 | 3/8" x 10" | 333 | | 15 1/2" | 204 # |
| 34" | 34.00 | 1/4" x 7" | 235 | 38.40 | 12" | 148 # |
| | 34.00 | 1/4" x 10" | 235 | | 15 1/2" | 176 # |
| | 34.00 | 3/8" x 7" | 311 | | 12" | 175 # |
| | 34.00 | 3/8" x 10" | 311 | | 15 1/2" | 215 # |
| 36" | 36.00 | 1/4" x 7" | 222 | 40.40 | 12" | 158 # |
| | 36.00 | 1/4" x 10" | 222 | | 15 1/2" | 187 # |
| | 36.00 | 3/8" x 7" | 333 | | 12" | 186 # |
| | 36.00 | 3/8" x 10" | 333 | | 15 1/2" | 228 # |
| | 38.30 | 1/4" x 7" | 208 | 42.70 | 12" | 166 # |
| | 38.30 | 1/4" x 10" | 208 | | 15 1/2" | 197 # |
| | 38.30 | 3/8" x 7" | 313 | | 12" | 196 # |
| | 38.30 | 3/8" x 10" | 313 | | 15 1/2" | 240 # |
| 42" | 42.00 | 1/4" x 7" | 190 | 46.90 | 12" | 223 # |
| | 42.00 | 1/4" x 10" | 190 | | 15 1/2" | 257 # |
| | 42.00 | 3/8" x 7" | 288 | | 12" | 256 # |
| | 42.00 | 3/8" x 10" | 288 | | 15 1/2" | 305 # |
| | 44.50 | 3/8" x 7" | 269 | 49.40 | 12" | 269 # |
| | 44.50 | 3/8" x 10" | 269 | | 15 1/2" | 320 # |
| 48" | 48.00 | 3/8" x 7" | 250 | 52.90 | 12" | 290 # |
| | 48.00 | 3/8" x 10" | 250 | | 15 1/2" | 345 # |
| | 50.80 | 3/8" x 7" | 236 | 55.70 | 12" | 304 # |
| | 50.80 | 3/8" x 10" | 236 | | 15 1/2" | 362 # |
| 54" | 54.00 | 3/8" x 10" | 222 | 58.90 | 15 1/2" | 385 # |
| | 54.00 | 1/2" x 10" | 270 | | | 446 # |
| 60" | 60.00 | 3/8" x 10" | 200 | 64.90 | 15 1/2" | 428 # |
| | 60.00 | 1/2" x 10" | 266 | | | 495 # |
| 66" | 66.00 | 3/8" x 10" | 181 | 70.90 | 15 1/2" | 468 # |
| | 66.00 | 1/2" x 10" | 242 | | | 542 # |
| 72" | 72.00 | 3/8" x 10" | 167 | 77.0 | 15 1/2" | 508 # |
| | 72.00 | 1/2" x 10" | 222 | | | 588 # |
| 96" | 96.00 | 1/2" x 10" | 166 | 101.0 | 15 1/2" | 954 # |

**Other sizes available. Price on application.**

# Exhibit E – Photographs

**Photo 1 - Crane location. NOTE: crane is not allowed on bridge adjacent to building.**

**Photo 2 – Access road along dike crest. NOTE: High-voltage powerline.**

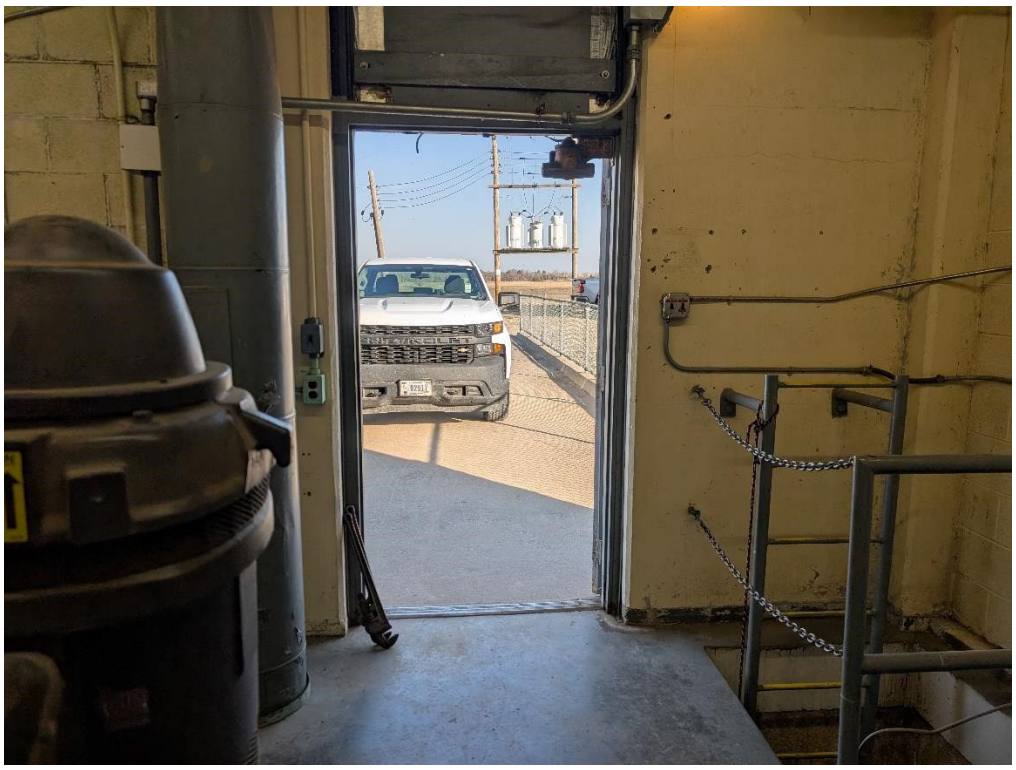

**Photo 3 – Access door to pump.**

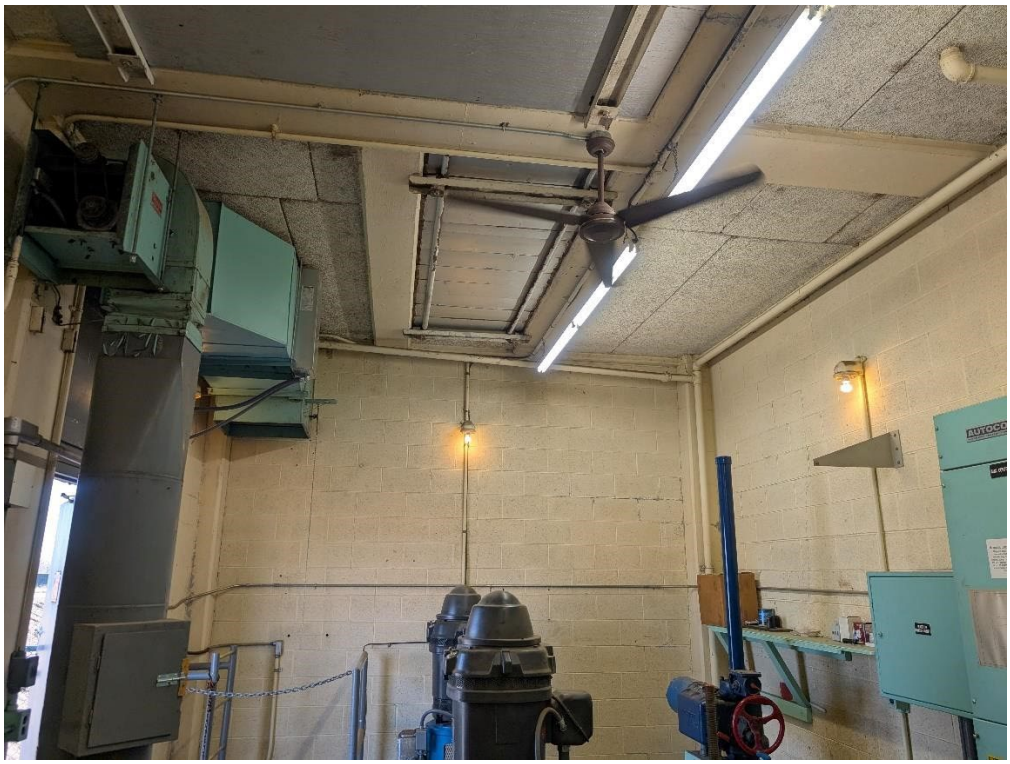

**Photo 4 – Access hatch above pump.**

**Photo 5 – Pump location in building.**

**Photo 6 – Pump to be repaired.**

**Photo 7 – Spare parts.  NOTE: not all parts are for this pump.**

**Photo 8 – Top of lineshaft**

**Photo 9 – Closeup view of top bearing showing wear from lineshaft vibration.**

**Photo 10 – Bottom view of motor. NOTE: the bronze collar and lineshaft coupler have been loose in the past after operation of the pumping unit.**

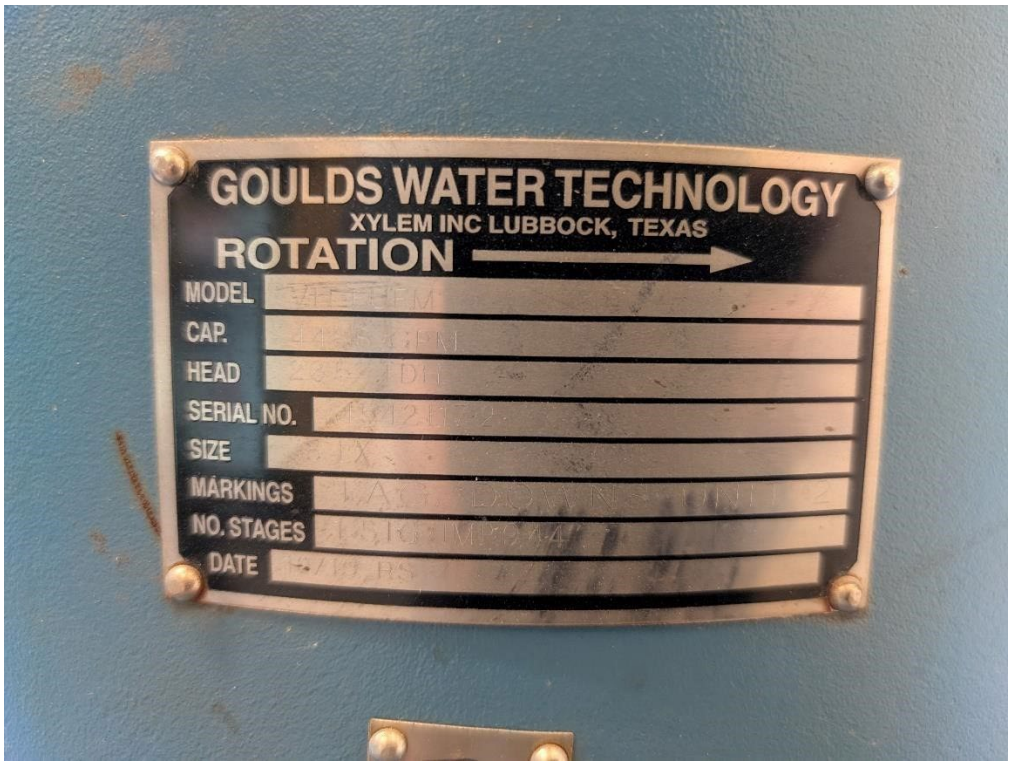


**Photo 11 – Pump data plate.**

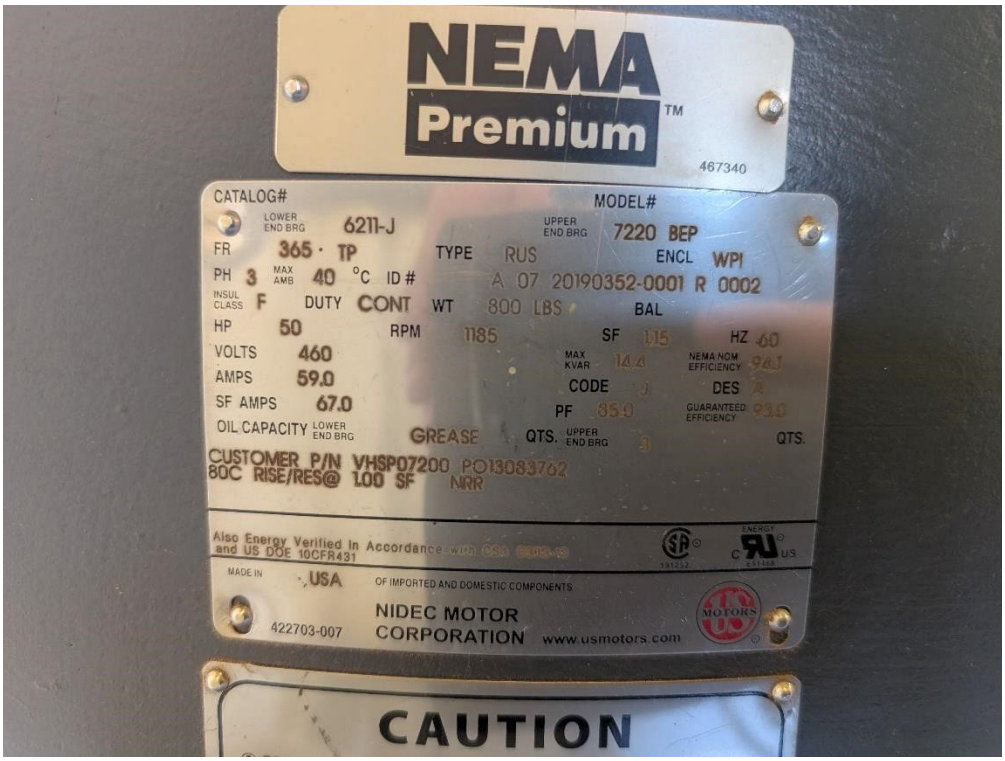


**Photo 12 – Motor date plate.**

**Photo 13 – Steel grease line to be replaced by flexible hose-type grease line.**

**Photo 14 – Exterior of generator building.**

**Photo 15 – Generator building access doors.**

**Photo 16 – Location of fuel tank. Reclamation will remove propane tank and place concrete pad for new fuel tank.**

**Photo 17 – Existing generator installation.**

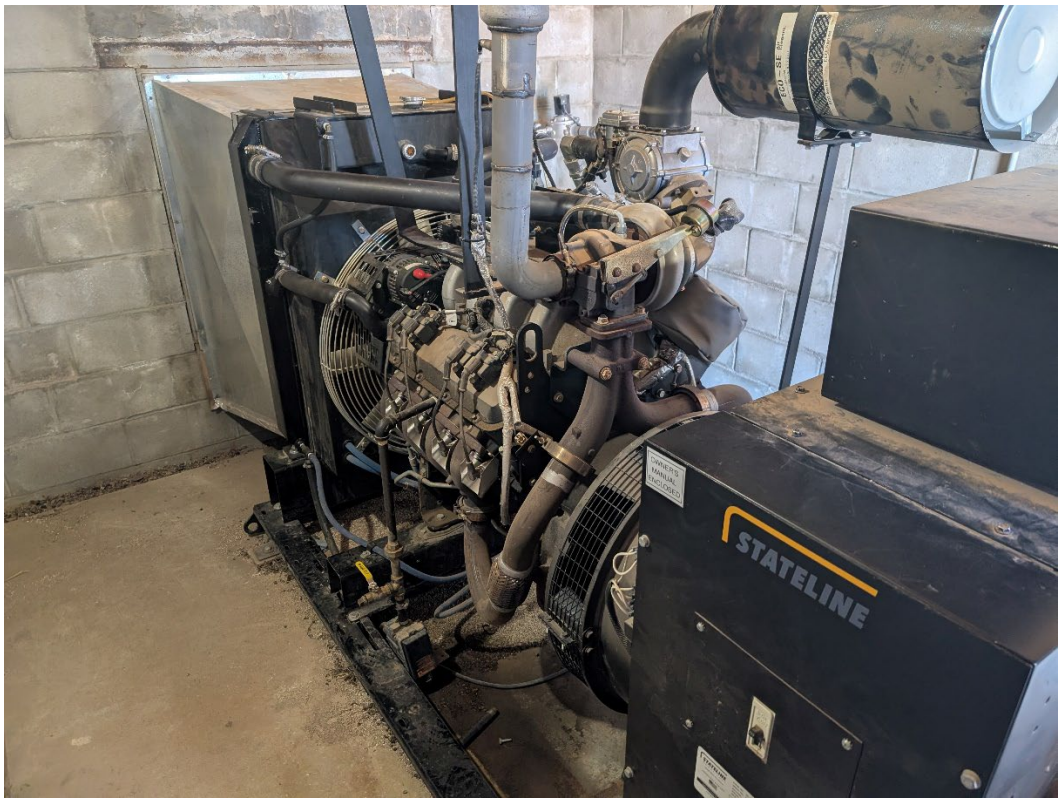


**Photo 18 – Existing generator installation.**

**Photo 19 – Generator electrical connections.**