February, 2012

Asbestos and Lead-Based Paint Inspection At Building 2903 Fort Bliss, Texas

Prepared for:

Tepa EC, LLC

Attn.: Mr. Juan Lara
6501 Boeing Dr.
El Paso, Texas 79925

Prepared by:

R&A CONSULTANTS, CORP.

Ph.: 915-779-6605 Fax: 915-779-6689
5620 Gateway Blvd. East El Paso, TX 79905

R&A CONSULTANTS, CORP.

5620 Gateway Blvd. East
El Paso, Texas 79905

Phone: (915) 779-6605
Fax: (915) 779-6689

February 14, 2012

Tepa EC, LLC
Attn.: Mr. Juan Lara
6501 Boeing Drive, Suite D-4
El Paso, Texas 79925
915-779-8400

Subject: **Report of Asbestos and Lead-Based Paint Survey**
Building 2903
Fort Bliss, Texas
R & A Project No: RA11-308

Dear Mr. Lara:

Thank you for this opportunity to provide Tepa EC, LLC (Tepa) with our professional services. R & A Consultants, Corp. (R&A) has completed an asbestos and lead survey in support of the planned renovation/demolition of Building 2903 located at Fort Bliss, Texas. R & A performed this survey on February 9, 2012.

The purpose of the asbestos survey was to identify asbestos-containing materials that may be present in the affected areas and are anticipated to be disturbed. The survey was performed to comply with regulations issued by the U.S. Environmental Protection Agency (NESHAP regulations, 40 CFR 61 (M)), and the Texas Asbestos Health Protection Rules (25 TAC § 295.31 to 295.73). These regulations generally require that, prior to any construction, renovation, or demolition, the area where the work is to be performed shall be inspected by a properly trained and licensed individual for the presence of asbestos-containing materials that may be disturbed during the work.

The asbestos/Lead-Based Paint survey was performed on February 9, 2012 by Mr. Juan R. Ayala (DSHS Asbestos Consultant No. 105450) and Mr. Oscar E. Ayala (DSHS Lead Risk Assessor No. 2070966). Based on the scope of renovations, as we understand it, bulk samples were collected from suspect materials identified on the property.

During the asbestos inspection suspect materials were identified and sampled. The suspect materials that were sampled during the survey included 12x12 white floor tile, floor tile mastic, sheetrock wall, joint compound wall, sheetrock ceiling, joint compound ceiling, gray vinyl flooring & mastic, carpet mastic, 2x2 ceiling tile, gray cove base, cove base mastic, interior wall plaster, spray-on ceiling texture, interior door caulking, exterior door caulking and exterior plaster materials.

The samples of suspect materials were sent to Crisp Analytical, LLC, an accredited and licensed asbestos laboratory (TX DSHS Laboratory License No. 300235), for analysis by polarized light microscopy (PLM) coupled with dispersion staining utilizing visual area estimation. The samples were submitted for "positive stop" analysis. Under the EPA's AHERA protocols, if any one sample from a particular homogenous area is found to contain more than one percent asbestos, analyses of further samples from that same area may be omitted because the homogeneous area is considered ACM. The remaining samples of the same material are not analyzed.

Of the bulk samples collected, none of them were reported to contain asbestos.

Conclusion

As noted previously, from the suspect materials identified on the areas to be disturbed on an up-coming renovation project, bulk samples were collected and analyzed. None of the collected samples were found to contain asbestos.

Again, R & A Consultants, Corp. appreciates the opportunity to serve as your consultant in this matter. If you have any questions or if we may be of further service to you, please contact us at (915) 779-6605.

Sincerely,

R & A Consultants, Corp.

Juan R. Ayala
Asbestos Consultant Lic. No. 105450

CA Labs
Dedicated to Quality

Crisp Analytical, L.L.C.
1929 Old Denton Road
Carrollton, TX 75006
Phone 972-242-2754
Fax 972-242-2798

CA Labs, L.L.C.
12232 Industriplex, Suite 32
Baton Rouge, LA 70809
Phone 225-751-5632
Fax 225-751-5634

Materials Characterization - Bulk Asbestos Analysis

Laboratory Analysis Report - Polarized Light

R & A Consultants
5620 Gateway East Blvd
El Paso, TX 79905

Attn: Oscar Ayala
Customer Project: Fort Bliss / Building 2903
Reference #: CAL12021022MA Date: 02/13/12

Analysis and Method

Summary of polarizing light microscopy (PLM / Stereomicroscopy bulk asbestos analysis) using the methods described in 40CFR Part 763 Appendix E to Subpart E (Interim and EPA 600 / R-93 / 116 (Improved). The sample is first viewed with the aid of stereomicroscopy. Numerous liquid slide preparations are created for analysis under the polarized microscope where identifications and quantifications are preformed. Calibrated liquid refractive oils are used as liquid mouting medium. These oils are used for identification (dispersion staining). A calibrated visual estimation is reported, should any asbestiform mineral be present. Other techniques such as acid washing are used in conjugation with refractive oils for detection of smaller quantities of asbestos. All asbestos percentages are based on calibrated visual estimation traceable to NIST standards for regulated of asbestos. Traceability to measurement and calibration is achieved by using known amounts and types of asbestos from standards where analyst and laboratory accuracy are measured. As little as 0.001% asbestos can be detected in favorable samples, while detection in unfavorable samples may approach the detection limit of 0.50% (well above the laboratory definition of trace).

Discussion

Vermiculite containing samples may have trace amounts of actinolite-tremolite, where not found be PLM should be analyzed using TEM methods and / or water separation techniques. Suspected actinolite/vermiculite presence will be indicated through the sample comment section of this report.

Fibrous talc containing samples may even contain a related asbestos fiber known as anthophyllite. Under certain conditions the same fiber may actually contain both talc and anthophyllite (a phenomenon called intergrowth). Again, TEM detection methods are recommended. CA Labs PLM report comments will denote suspected amounts of asbestiform anthophyllite with talc, where further analysis is recommended.

Some samples (floor tiles, surfacings, etc.) may contain fibers too small to be delectable by PLM analysis and should be analyzed by TEM bulk protocols.

A "trace asbestos" will be reported if the analyst observes far less than 1% asbestos. CA Labs defines "trace asbestos" as a few fibers detected by the analyst in several preparations and will indicate as such under these circumstances.

Quantification of <1% will actually be reported as <=1% (allowable variance close to 1% is high). Such results are ideal for point counting, and the technique is mandatory for friable samples (NESHAP, Nov. 1990 and clarification letter 8 May 1991) under 1% percent asbestos and the "trace asbestos". **In order to make all initial PLM reports issued from CA Labs NESHAP compliant, all <1% asbestos results (except floor tiles) will be point counted at no additional charge.**

Qualifications

CA Labs is accredited by the National Voluntary Accreditation Program (NVLAP) for selected test methods for airborne fiber analysis (TEM), and for bulk asbestos fiber analysis (PLM). CA Labs is also accredited by AIHA LAP, LLC. in the PLM asbestos field of testing for Industrial Hygiene. All analysts have a college degree in a natural science (geology, biology, or environmental science) or are recognized by a state professional board in one these disciplines .Extensive in-house training programs are used to augment education background of the analyst. The group leader of polarized light has received supplemental McCrone Research training for asbestos identification. Analysis performed at Crisp Analytical Labs, LLC 1929 Old Denton Road Carrollton, TX 75006

Dallas NVLAP Lab Code 200349-0 TEM/PLM EPA H20 TX 01402 TDH 30-0235
AIHA LAP, LLC Laboratory #102929

CA Labs
Dedicated to Quality

Crisp Analytical, L.L.C.
1929 Old Denton Road
Carrollton, TX 75006
Phone 972-242-2754
Fax 972-242-2798

CA Labs, L.L.C.
12232 Industriplex, Suite 32
Baton Rouge, LA 70809
Phone 225-751-5632
Fax 225-751-5634

Overview of Project Sample Material Containing Asbestos

Customer Project: Fort Bliss / Building 2903 **CA Labs Project #:** CAL12021022MA

Sample #	Layer #	Analysts Physical Description of Subsample	Asbestos type / calibrated visual estimate percent	List of Affected Building Material Types

No Asbestos Detected.

Dallas NVLAP Lab Code 200349-0 TEM/PLM EPA H20 TX 01402 TDH 30-0235
AIHA LAP, LLC Laboratory #102929

Glossary of abbreviations (non-asbestos fibers and non-fibrous minerals):

ca - carbonate
gypsum - gypsum
bi - binder
or - organic
ma - matrix
mi - mica
ve - vermiculite
ot - other
pe - perlite
qu - quartz
fg - fiberglass
mw - mineral wool
wo - wollastinite
ta - talc
sy - synthetic
ce - cellulose
br - brucite
ka - kaolin (clay)
pa - palygorskite (clay)

This report relates to the items tested. This report is not to be used by the customer to claim product certification, approval or endorsement by NVLAP, NIST, AIHA LAP, LLC, or any other agency of the federal government. This report may not be reproduced except in full without written permission from CA Labs. These results are submitted pursuant to CA Labs' current terms and sale, condition of sale, including the company's standard warranty and limitations of liability provisions and no responsibility or liability is assumed for the manner in which the results are used or interpreted. Unless notified in writing to return the samples covered by this report, CA Labs will store the samples for a period of ninety (90) days before discarding. A shipping or handling fee may be assessed for the return of any samples.

CA Labs
Dedicated to Quality

Crisp Analytical, L.L.C.
1929 Old Denton Road
Carrollton, TX 75006
Phone 972-242-2754
Fax 972-242-2798

CA Labs, L.L.C.
12232 Industriplex, Suite 32
Baton Rouge, LA 70809
Phone 225-751-5632
Fax 225-751-5634

Polarized Light Asbestiform Materials Characterization

Customer Info: **Attn:** Oscar Ayala
R & A Consultants
5620 Gateway East Blvd
El Paso, TX 79905

Phone # 915-779-6605
Fax # 915-779-6689

Customer Project:
Fort Bliss / Building 2903
Turnaround Time:
24 hours

CA Labs Project #:
CAL12021022MA

Date: 02/13/12
Samples Received: 2/10/12 9 am
Date Of Sampling: 2/9/2012
Purchase Order #:

Sample #	Comment	Layer #	Analysts Physical Description of Subsample	Homogeneous (Y/N)	Asbestos type / calibrated visual estimate percent	Non-asbestos fiber type / percent	Non-fibrous type / percent
FB2902-01		1-1	*tan floor tile*	y	***None detected***		100% qu,ca
		1-2	*tan mastic*	y	***None detected***		100% qu,ma
FB2902-02		2-1	*tan floor tile*	y	***None detected***		100% qu,ca
		2-2	*tan mastic*	y	***None detected***		100% qu,ma
FB2902-03		3-1	*tan floor tile*	y	***None detected***		100% qu,ca
		3-2	*tan mastic*	y	***None detected***		100% qu,ma
FB2902-04		4-1	*white surfaced white compound*	n	***None detected***		100% qu,mi,ca

Dallas NVLAP Lab Code 200349-0 TEM/PLM *EPA H20 TX 01402* *TDH 30-0235*

AIHA LAP, LLC Laboratory #102929

Analysis Method: Interim (40CFR Part 763 Appendix E to Subpart E) / Improved (EPA-600 / R-93/116)
Preparation Method: HCL acid washing for carbonate based samples, chemical reduction for organically bound components, oil immersion for identification of asbestos types by dispersion attaining / becke line method.

ca - carbonate	mi - mica	lg - fiberglass	ce - cellulose
gypsum - gypsum	ve - vermiculite	mw - mineral wool	br - brucite
bi - binder	ot -other	wo - wollastinite	ka - kaolin (clay)
or - organic	pe - perlite	ta - talc	pa - palygorskite (clay)
ma - matrix	qu - quartz	sy - synthetic	

Approved Signatories:

Leslie Crisp
Analyst

QAC
Leslie Crisp, P.G.

Technical Manager
Chad Lytle

1. Fire Damage significant fiber damage - reported percentages reflect unaltered fibers
2. Fire Damage no significant fiber damages effecting fibrous percentages
3. Actinolite in association with Vermiculite
4. Layer not analyzed - attached to previous positive layer and contamination is suspected
5. Not enough sample to analyze
6. Anthophyllite in association with Fibrous Talc
7. Contamination suspected from other building materials
8. Favorable scenario for water separation on vermiculite for possible analysis by another method
9. < 1% Result point counted positive
10. TEM analysis suggested

CA Labs
Dedicated to Quality

Crisp Analytical, L.L.C.
1929 Old Denton Road
Carrollton, TX 75006
Phone 972-242-2754
Fax 972-242-2798

CA Labs, L.L.C.
12232 Industriplex, Suite 32
Baton Rouge, LA 70809
Phone 225-751-5632
Fax 225-751-5634

Polarized Light Asbestiform Materials Characterization

Customer Info: **Attn:** Oscar Ayala
R & A Consultants
5620 Gateway East Blvd
El Paso, TX 79905

Phone # 915-779-6605
Fax # 915-779-6689

Customer Project:
Fort Bliss / Building 2903
Turnaround Time:
24 hours

CA Labs Project #:
CAL12021022MA

Date: 02/13/12
Samples Received: 2/10/12 9 am
Date Of Sampling: 2/9/2012
Purchase Order #:

Sample #	Comment	Layer #	Analysts Physical Description of Subsample	Homogeneous (Y/N)	Asbestos type / calibrated visual estimate percent	Non-asbestos fiber type / percent	Non-fibrous type / percent
		4-2	*white drywall with brown paper*	*n*	***None detected***	18% ce 2% fg	80% qu,gy
FB2902-05		*5-1*	*white surfacing*	*y*	***None detected***		100% qu,bi
		5-2	*white drywall with brown paper*	*n*	***None detected***	20% ce 1% fg	79% qu,gy
		5-3	*off-white surfaced white compound*	*n*	***None detected***		100% qu,mi,ca
FB2902-06		*6-1*	*white surfacing*	*y*	***None detected***		100% qu,bi
		6-2	*white drywall with brown paper*	*n*	***None detected***	18% ce 2% fg	80% qu,gy
		6-3	*white surfaced white compound*	*n*	***None detected***		100% qu,mi,ca

Dallas NVLAP Lab Code 200349-0 TEM/PLM *EPA H20 TX 01402* *TDH 30-0235*

AIHA LAP, LLC Laboratory #102929

Analysis Method: Interim (40CFR Part 763 Appendix E to Subpart E) / Improved (EPA-600 / R-93/116)
Preparation Method: HCL acid washing for carbonate based samples, chemical reduction for organically bound components, oil immersion for identification of asbestos types by dispersion attaining / becke line method.

ca - carbonate	mi - mica	fg - fiberglass	ce - cellulose
gypsum - gypsum	ve - vermiculite	mw - mineral wool	br - brucite
bi - binder	ot -other	wo - wollastinite	ka - kaolin (clay)
or - organic	pe - perlite	ta - talc	pa - palygorskite (clay)
ma - matrix	qu - quartz	sy - synthetic	

Approved Signatories:

Leslie Crisp
Analyst

QAC
Leslie Crisp, P.G.

Technical Manager
Chad Lytle

1. Fire Damage significant fiber damage - reported percentages reflect unaltered fibers
2. Fire Damage no significant fiber damages effecting fibrous percentages
3. Actinolite in association with Vermiculite
4. Layer not analyzed - attached to previous positive layer and contamination is suspected
5. Not enough sample to analyze
6. Anthophyllite in association with Fibrous Talc
7. Contamination suspected from other building materials
8. Favorable scenario for water separation on vermiculite for possible analysis by another method
9. < 1% Result point counted positive
10. TEM analysis suggested

CA Labs
Dedicated to Quality

Crisp Analytical, L.L.C.
1929 Old Denton Road
Carrollton, TX 75006
Phone 972-242-2754
Fax 972-242-2798

CA Labs, L.L.C.
12232 Industriplex, Suite 32
Baton Rouge, LA 70809
Phone 225-751-5632
Fax 225-751-5634

Polarized Light Asbestiform Materials Characterization

Customer Info: **Attn:** Oscar Ayala
R & A Consultants
5620 Gateway East Blvd
El Paso, TX 79905

Phone # 915-779-6605
Fax # 915-779-6689

Customer Project:
Fort Bliss / Building 2903
Turnaround Time:
24 hours

CA Labs Project #:
CAL12021022MA

Date: 02/13/12
Samples Received: 2/10/12 9 am
Date Of Sampling: 2/9/2012
Purchase Order #:

Sample #	Comment	Layer #	Analysts Physical Description of Subsample	Homogeneous (Y/N)	Asbestos type / calibrated visual estimate percent	Non-asbestos fiber type / percent	Non-fibrous type / percent
FB2902-07		7-1	*white surfacing*	*y*	***None detected***		100% qu,bi
		7-2	*white drywall with brown paper*	*n*	***None detected***	23% ce 2% fg	75% qu,gy
		7-3	*white surfaced white compound*	*n*	***None detected***		100% qu,mi,ca
FB2902-08		8-1	*white surfacing*	*y*	***None detected***		100% qu,bi
		8-2	*white drywall with brown paper*	*n*	***None detected***	20% ce 2% fg	78% qu,gy
		8-3	*white surfaced white compound*	*n*	***None detected***		100% qu,mi,ca
FB2902-09		9-1	*white surfacing*	*y*	***None detected***		100% qu,bi

Dallas NVLAP Lab Code 200349-0 TEM/PLM *EPA H20 TX 01402* *TDH 30-0235*

AIHA LAP, LLC Laboratory #102929

Analysis Method: Interim (40CFR Part 763 Appendix E to Subpart E) / Improved (EPA-600 / R-93/116)
Preparation Method: HCL acid washing for carbonate based samples, chemical reduction for organically bound components, oil immersion for identification of asbestos types by dispersion attaining / becke line method.

ca - carbonate	mi - mica	fg - fiberglass	ce - cellulose
gypsum - gypsum	ve - vermiculite	mw - mineral wool	br - brucite
bi - binder	ot -other	wo - wollastinite	ka - kaolin (clay)
or - organic	pe - perlite	ta - talc	pa - palygorskite (clay)
ma - matrix	qu - quartz	sy - synthetic	

Approved Signatories:

Leslie Crisp
Analyst

QAC
Leslie Crisp, P.G.

Technical Manager
Chad Lytle

1. Fire Damage significant fiber damage - reported percentages reflect unaltered fibers
2. Fire Damage no significant fiber damages effecting fibrous percentages
3. Actinolite in association with Vermiculite
4. Layer not analyzed - attached to previous positive layer and contamination is suspected
5. Not enough sample to analyze
6. Anthophyllite in association with Fibrous Talc
7. Contamination suspected from other building materials
8. Favorable scenario for water separation on vermiculite for possible analysis by another method
9. < 1% Result point counted positive
10. TEM analysis suggested

CA Labs
Dedicated to Quality

Crisp Analytical, L.L.C.
1929 Old Denton Road
Carrollton, TX 75006
Phone 972-242-2754
Fax 972-242-2798

CA Labs, L.L.C.
12232 Industriplex, Suite 32
Baton Rouge, LA 70809
Phone 225-751-5632
Fax 225-751-5634

Polarized Light Asbestiform Materials Characterization

Customer Info: **Attn:** Oscar Ayala
R & A Consultants
5620 Gateway East Blvd
El Paso, TX 79905

Phone # 915-779-6605
Fax # 915-779-6689

Customer Project:
Fort Bliss / Building 2903
Turnaround Time:
24 hours

CA Labs Project #:
CAL12021022MA

Date: 02/13/12
Samples Received: 2/10/12 9 am
Date Of Sampling: 2/9/2012
Purchase Order #:

Sample #	Comment	Layer #	Analysts Physical Description of Subsample	Homogeneous (Y/N)	Asbestos type / calibrated visual estimate percent	Non-asbestos fiber type / percent	Non-fibrous type / percent
		9-2	*white drywall with brown paper*	*n*	***None detected***	18% ce 1% fg	81% qu,gy
		9-3	*white surfaced white compound*	*n*	***None detected***		100% qu,mi,ca
FB2902-10		*10-1*	*gray rubber flooring*	*y*	***None detected***		100% qu,or
	5	*10-2*	*clear mastic*				
FB2902-11		*11-1*	*gray rubber flooring*	*y*	***None detected***		100% qu,or
		11-2	*clear mastic*	*y*	***None detected***		100% qu,ma
FB2902-12		*12-1*	*gray rubber flooring*	*y*	***None detected***		100% qu,or

Dallas NVLAP Lab Code 200349-0 TEM/PLM *EPA H20 TX 01402* *TDH 30-0235*

AIHA LAP, LLC Laboratory #102929

Analysis Method: Interim (40CFR Part 763 Appendix E to Subpart E) / Improved (EPA-600 / R-93/116)
Preparation Method: HCL acid washing for carbonate based samples, chemical reduction for organically bound components, oil immersion for identification of asbestos types by dispersion attaining / becke line method.

ca - carbonate	mi - mica	fg - fiberglass	ce - cellulose
gypsum - gypsum	ve - vermiculite	mw - mineral wool	br - brucite
bi - binder	ot -other	wo - wollastinite	ka - kaolin (clay)
or - organic	pe - perlite	ta - talc	pa - palygorskite (clay)
ma - matrix	qu - quartz	sy - synthetic	

Approved Signatories:

Leslie Crisp
Analyst

QAC
Leslie Crisp, P.G.

Technical Manager
Chad Lytle

1. Fire Damage significant fiber damage - reported percentages reflect unaltered fibers
2. Fire Damage no significant fiber damages effecting fibrous percentages
3. Actinolite in association with Vermiculite
4. Layer not analyzed - attached to previous positive layer and contamination is suspected
5. Not enough sample to analyze
6. Anthophyllite in association with Fibrous Talc
7. Contamination suspected from other building materials
8. Favorable scenario for water separation on vermiculite for possible analysis by another method
9. < 1% Result point counted positive
10. TEM analysis suggested

CA Labs
Dedicated to Quality

Crisp Analytical, L.L.C.
1929 Old Denton Road
Carrollton, TX 75006
Phone 972-242-2754
Fax 972-242-2798

CA Labs, L.L.C.
12232 Industriplex, Suite 32
Baton Rouge, LA 70809
Phone 225-751-5632
Fax 225-751-5634

Polarized Light Asbestiform Materials Characterization

Customer Info: **Attn:** Oscar Ayala
R & A Consultants
5620 Gateway East Blvd
El Paso, TX 79905

Phone # 915-779-6605
Fax # 915-779-6689

Customer Project:
Fort Bliss / Building 2903
Turnaround Time:
24 hours

CA Labs Project #:
CAL12021022MA

Date: 02/13/12
Samples Received: 2/10/12 9 am
Date Of Sampling: 2/9/2012
Purchase Order #:

Sample #	Comment	Layer #	Analysts Physical Description of Subsample	Homogeneous (Y/N)	Asbestos type / calibrated visual estimate percent	Non-asbestos fiber type / percent	Non-fibrous type / percent
		12-2	*clear mastic*	*y*	***None detected***		100% qu,ma
FB2902-13		*13-1*	*tan mastic*	*y*	***None detected***	<1% fg	100% gy,ma
FB2902-14		*14-1*	*tan mastic*	*y*	***None detected***	1% fg	99% gy,ma
FB2902-15		*15-1*	*tan mastic*	*y*	***None detected***	1% fg	99% gy,ma
FB2902-16		*16-1*	*white surfacing*	*y*	***None detected***		100% qu,ca
		16-2	*gray ceiling tile*	*y*	***None detected***	41% ce 17% fg	42% ot
FB2902-17		*17-1*	*white surfacing*	*y*	***None detected***		100% qu,ca

Dallas NVLAP Lab Code 200349-0 TEM/PLM *EPA H20 TX 01402* *TDH 30-0235*

AIHA LAP, LLC Laboratory #102929

Analysis Method: Interim (40CFR Part 763 Appendix E to Subpart E) / Improved (EPA-600 / R-93/116)
Preparation Method: HCL acid washing for carbonate based samples, chemical reduction for organically bound components, oil immersion for identification of asbestos types by dispersion attaining / becke line method

ca - carbonate	mi - mica	fg - fiberglass	ce - cellulose
gypsum - gypsum	ve - vermiculite	mw - mineral wool	br - brucite
bi - binder	ot -other	wo - wollastinite	ka - kaolin (clay)
or - organic	pe - perlite	ta - talc	pa - palygorskite (clay)
ma - matrix	qu - quartz	sy - synthetic	

Approved Signatories:

Leslie Crisp
Analyst

QAC
Leslie Crisp, P.G.

Technical Manager
Chad Lytle

1. Fire Damage significant fiber damage - reported percentages reflect unaltered fibers
2. Fire Damage no significant fiber damages effecting fibrous percentages
3. Actinolite in association with Vermiculite
4. Layer not analyzed - attached to previous positive layer and contamination is suspected
5. Not enough sample to analyze
6. Anthophyllite in association with Fibrous Talc
7. Contamination suspected from other building materials
8. Favorable scenario for water separation on vermiculite for possible analysis by another method
9. < 1% Result point counted positive
10. TEM analysis suggested

CA Labs
Dedicated to Quality

Crisp Analytical, L.L.C.
1929 Old Denton Road
Carrollton, TX 75006
Phone 972-242-2754
Fax 972-242-2798

CA Labs, L.L.C.
12232 Industriplex, Suite 32
Baton Rouge, LA 70809
Phone 225-751-5632
Fax 225-751-5634

Polarized Light Asbestiform Materials Characterization

Customer Info: **Attn:** Oscar Ayala
R & A Consultants
5620 Gateway East Blvd
El Paso, TX 79905

Phone # 915-779-6605
Fax # 915-779-6689

Customer Project:
Fort Bliss / Building 2903
Turnaround Time:
24 hours

CA Labs Project #:
CAL12021022MA

Date: 02/13/12
Samples Received: 2/10/12 9 am
Date Of Sampling: 2/9/2012
Purchase Order #:

Sample #	Comment	Layer #	Analysts Physical Description of Subsample	Homogeneous (Y/N)	Asbestos type / calibrated visual estimate percent	Non-asbestos fiber type / percent	Non-fibrous type / percent
		17-2	*gray ceiling tile*	*y*	***None detected***	43% ce 17% fg	40% ot
FB2902-18		*18-1*	*gray ceiling tile*	*y*	***None detected***	47% ce 15% fg	38% ot
FB2902-19		*19-1*	*brown base board*	*y*	***None detected***		100% gy,or
		19-2	*tan mastic*	*y*	***None detected***		100% gy,ma
FB2902-20		*20-1*	*brown base board*	*y*	***None detected***		100% gy,or
		20-2	*tan mastic*	*y*	***None detected***	1% ce	99% gy,ma
FB2902-21		*21-1*	*brown base board*	*y*	***None detected***		100% gy,or

Dallas NVLAP Lab Code 200349-0 TEM/PLM *EPA H20 TX 01402* *TDH 30-0235*

AIHA LAP, LLC Laboratory #102929

Analysis Method: Interim (40CFR Part 763 Appendix E to Subpart E) / Improved (EPA-600 / R-93/116)
Preparation Method: HCL acid washing for carbonate based samples, chemical reduction for organically bound components, oil immersion for identification of asbestos types by dispersion attaining / becke line method.

ca - carbonate	mi - mica	fg - fiberglass	ce - cellulose
gypsum - gypsum	ve - vermiculite	mw - mineral wool	br - brucite
bi - binder	ot -other	wo - wollastinite	ka - kaolin (clay)
or - organic	pe - perlite	ta - talc	pa - palygorskite (clay)
ma - matrix	qu - quartz	sy - synthetic	

Approved Signatories:

Leslie Crisp
Analyst

QAC
Leslie Crisp, P.G.

Technical Manager
Chad Lytle

1. Fire Damage significant fiber damage - reported percentages reflect unaltered fibers
2. Fire Damage no significant fiber damages effecting fibrous percentages
3. Actinolite in association with Vermiculite
4. Layer not analyzed - attached to previous positive layer and contamination is suspected
5. Not enough sample to analyze
6. Anthophyllite in association with Fibrous Talc
7. Contamination suspected from other building materials
8. Favorable scenario for water separation on vermiculite for possible analysis by another method
9. < 1%. Result point counted positive
10. TEM analysis suggested

CA Labs
Dedicated to Quality

Crisp Analytical, L.L.C.
1929 Old Denton Road
Carrollton, TX 75006
Phone 972-242-2754
Fax 972-242-2798

CA Labs, L.L.C.
12232 Industriplex, Suite 32
Baton Rouge, LA 70809
Phone 225-751-5632
Fax 225-751-5634

Polarized Light Asbestiform Materials Characterization

Customer Info: **Attn:** Oscar Ayala
R & A Consultants
5620 Gateway East Blvd
El Paso, TX 79905

Phone # 915-779-6605
Fax # 915-779-6689

Customer Project:
Fort Bliss / Building 2903
Turnaround Time:
24 hours

CA Labs Project #:
CAL12021022MA

Date: 02/13/12
Samples Received: 2/10/12 9 am
Date Of Sampling: 2/9/2012
Purchase Order #:

Sample #	Comment	Layer #	Analysts Physical Description of Subsample	Homogeneous (Y/N)	Asbestos type / calibrated visual estimate percent	Non-asbestos fiber type / percent	Non-fibrous type / percent
		21-2	tan mastic	y	***None detected***	1% ce	99% gy,ma
FB2902-22		22-1	off-white finishing plaster	y	***None detected***		100% qu,ca
FB2902-23		23-1	off-white finishing plaster	y	***None detected***		100% qu,ca
FB2902-24		24-1	off-white finishing plaster	y	***None detected***		100% qu,ca
FB2902-25		25-1	off-white finishing plaster	y	***None detected***		100% qu,ca
FB2902-26		26-1	off-white finishing plaster	y	***None detected***		100% qu,ca
FB2902-27		27-1	off-white finishing plaster	y	***None detected***		100% qu,ca

Dallas NVLAP Lab Code 200349-0 TEM/PLM *EPA H20 TX 01402* *TDH 30-0235*

AIHA LAP, LLC Laboratory #102929

Analysis Method: Interim (40CFR Part 763 Appendix E to Subpart E) / Improved (EPA-600 / R-93/116)
Preparation Method: HCL acid washing for carbonate based samples, chemical reduction for organically bound components, oil immersion for identification of asbestos types by dispersion attaining / becke line method.

ca - carbonate	mi - mica	fg - fiberglass	ce - cellulose
gypsum - gypsum	ve - vermiculite	mw - mineral wool	br - brucite
bi - binder	ot -other	wo - wollastinite	ka - kaolin (clay)
or - organic	pe - perlite	ta - talc	pa - palygorskite (clay)
ma - matrix	qu - quartz	sy - synthetic	

Approved Signatories:

Leslie Crisp
Analyst

QAC
Leslie Crisp, P.G.

Technical Manager
Chad Lytle

1. Fire Damage significant fiber damage - reported percentages reflect unaltered fibers
2. Fire Damage no significant fiber damages effecting fibrous percentages
3. Actinolite in association with Vermiculite
4. Layer not analyzed - attached to previous positive layer and contamination is suspected
5. Not enough sample to analyze
6. Anthophyllite in association with Fibrous Talc
7. Contamination suspected from other building materials
8. Favorable scenario for water separation on vermiculite for possible analysis by another method
9. < 1% Result point counted positive
10. TEM analysis suggested

CA Labs
Dedicated to Quality

Crisp Analytical, L.L.C.
1929 Old Denton Road
Carrollton, TX 75006
Phone 972-242-2754
Fax 972-242-2798

CA Labs, L.L.C.
12232 Industriplex, Suite 32
Baton Rouge, LA 70809
Phone 225-751-5632
Fax 225-751-5634

Polarized Light Asbestiform Materials Characterization

Customer Info: **Attn:** Oscar Ayala
R & A Consultants
5620 Gateway East Blvd
El Paso, TX 79905

Phone # 915-779-6605
Fax # 915-779-6689

Customer Project:
Fort Bliss / Building 2903
Turnaround Time:
24 hours

CA Labs Project #:
CAL12021022MA

Date: 02/13/12
Samples Received: 2/10/12 9 am
Date Of Sampling: 2/9/2012
Purchase Order #:

Sample #	Comment	Layer #	Analysts Physical Description of Subsample	Homogeneous (Y/N)	Asbestos type / calibrated visual estimate percent	Non-asbestos fiber type / percent	Non-fibrous type / percent
FB2902-28		*28-1*	*off-white finishing plaster*	*y*	***None detected***		100% qu,mi,ca
FB2902-29		*29-1*	*off-white caulking*	*y*	***None detected***		100% qu,mi,bi
FB2902-30		*30-1*	*off-white caulking*	*y*	***None detected***		100% qu,mi,bi
FB2902-31		*31-1*	*off-white caulking*	*y*	***None detected***		100% qu,mi,bi
FB2902-32		*32-1*	*gray plaster*	*y*	***None detected***		100% qu,ca

Dallas NVLAP Lab Code 200349-0 TEM/PLM *EPA H20 TX 01402* *TDH 30-0235*

AIHA LAP, LLC Laboratory #102929

Analysis Method: Interim (40CFR Part 763 Appendix E to Subpart E) / Improved (EPA-600 / R-93/116)
Preparation Method: HCL acid washing for carbonate based samples, chemical reduction for organically bound components, oil immersion for identification of asbestos types by dispersion attaining / becke line method.

ca - carbonate	mi - mica	fg - fiberglass	ce - cellulose
gypsum - gypsum	ve - vermiculite	mw - mineral wool	br - brucite
bi - binder	ot -other	wo - wollastinite	ka - kaolin (clay)
or - organic	pe - perlite	ta - talc	pa - palygorskite (clay)
ma - matrix	qu - quartz	sy - synthetic	

Approved Signatories:

Leslie Crisp
Analyst

QAC
Leslie Crisp, P.G.

Technical Manager
Chad Lytle

1. Fire Damage significant fiber damage - reported percentages reflect unaltered fibers
2. Fire Damage no significant fiber damages effecting fibrous percentages
3. Actinolite in association with Vermiculite
4. Layer not analyzed - attached to previous positive layer and contamination is suspected
5. Not enough sample to analyze
6. Anthophyllite in association with Fibrous Talc
7. Contamination suspected from other building materials
8. Favorable scenario for water separation on vermiculite for possible analysis by another method
9. < 1% Result point counted positive
10. TEM analysis suggested

CA Labs

Crisp Analytical Laboratories, L.L.C
1929 Old Denton Rd.
Carrollton, TX 75006

Phone: 972-242-2754
Fax: 972-242-2798
Mobile: 469-222-6907

Chain of Custody

Client Name: R&A Consultants, Corp
Client Address: 5670 Gateway Blvd E.
El Paso, TX 79905

CA Labs job #: CAL

Billing Address: (if different)

Phone number: 915-779-6605
Fax number: 915-779-6689
Email: racons.deaylab@stzglobal.net

P.O. # :
Project Name: Ft. Bliss / Bldg 2903
Project Number:

Contact:

Reports Results VIA: EMAIL FAX VERBAL

Total # Samples Submitted:	Total # Samples to be Analyzed: STOP POSITIVE	Material Matrix: Air / Bulk / Water

Asbestos:

please call ahead for availability of all rush and/or after hours samples.

TEM	TA Time	PLM	TA Time	Optical / IAQ	TA Time
Circle analysis and TA time		*Circle analysis and TA time*			
AHERA	*4 hour*	Improved	*2 hour* 4 hour	PCM: NIOSH 7400	Note TAT
EPA Level II	8 hour	Interim	8 hour	~~Allergen Particle~~ tape/bulk/swab	~~24 hour~~ 2 days
Drinking Water	16 hour		16 hour	Cyclex-d cassettes	3 days
Wipe	24 hour	AHERA	24 hour	Air-o-cell cassettes	5-10 days
Micro-vac	2 days		2 days	Anderson cultures	Specify
NIOSH 7402	~~3 days~~	~~Point Count~~	~~3 days~~	~~Bulk/swab cultures~~	~~Mold or~~
Chatfield Bulk	5 days	(NESHAPS)	5 days	Bacteria cultures	bacteria

Please indicate appropriate turn around time. (minimum turnaround - 24 hrs for Lead TCLP and water)

Lead: *Circle analysis and TA time*

Matrix:	Paint Chips	Soil	Air	Wipes	Wastewater	
TA Time:	***8 hour***	1 day	2 days	3 days	5 days	6-10 days

Sample Information:

Sample Number:	Sample Location:	Sample Date/Time:	~~Sample Volume~~ (L)
FB2903-01,02,03	White 12x12 F.T. & Mastic	02/09/2012	STOP POSITIVE
" -04,05,06	Sheetrock & Je Ceiling text.	"	" "
" -07,08,09	Sheetrock & Je WALL TEXTURE	"	" "
" -10,11,12	GRAY Vinyl Flooring (STAIR) & Mastic	"	" "
" -13,14,15	CARPET MASTIC	"	" "

Custody Information:

Samples relinquished: 02/09/2012
Signature / Date / Time

Samples received:
Signature / Date / Time

Samples relinquished:
Signature / Date / Time

Samples received:
Signature / Date / Time

Client Name: R+A Consultants, Corp
Client Address: 5673 Gateway Blvd E
El Paso, TX 79905
phone number: 915-779-6605
fax number: 915-779-6689
Send Reports to: ramons.02ap@sbcglobal.net

CA Labs job # CAL
Billing Address: (if different)
Project Name:
Project Number:

Sample Number:	Sample Location:	Sample Date/Time:	~~Sample Volume (L)~~
FB2903-16,17,18	2x2 Ceiling tile	02/09/12	Stop Positive
" 19,20,21	Cove Base (Gray) & Mastic	"	" "
" 22,23,24	Interior wall PLASTER	"	" "
" 25,26,27	Spray on Ceiling texture	"	" "
" 28,29,30	Interior Door Caulking	"	—
" 31	Exterior Door Caulking	"	—
" 32	Exterior PLASTER	"	

For internal use:
Any initial changes regarding project (indicate yes by checking line)_____

ACM DRAWINGS

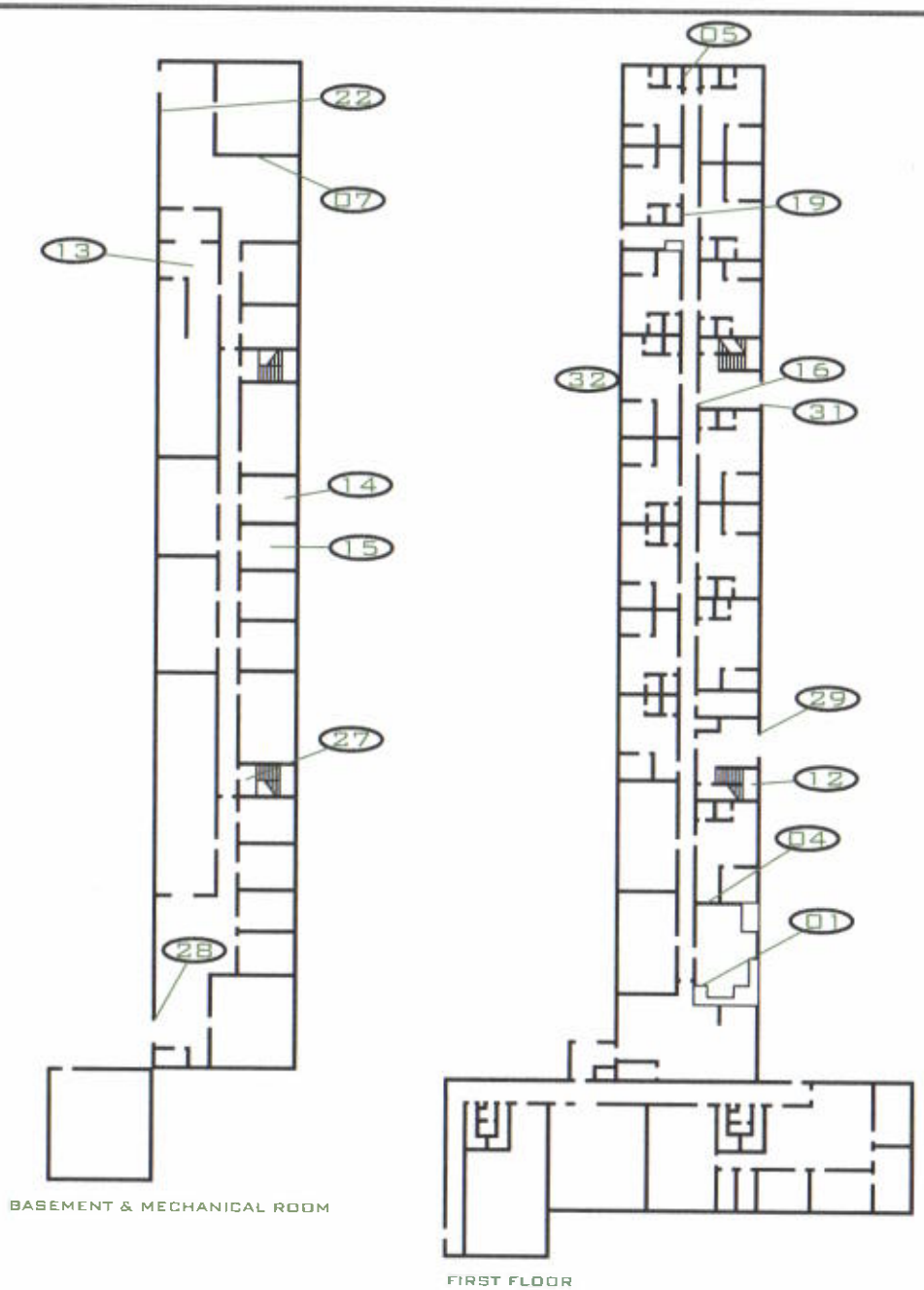

BUILDING 2903

R&A CONSULTANTS, CORP.
8620 GATEWAY EAST
EL PASO, TX 79908
PHONE: (915) 779-6605
FAX: (915) 779-6689

BUILDING 2903
FORT BLISS, TEXAS

ASBESTOS INSPECTION

LOCATION
FIRST FLOOR, BASEMENT, & MECHANICAL ROOM

LEGEND
SAMPLE LOCATIONS
(#) SAMPLE LOCATION NUMBER

REVISIONS
1
2

INSPECTED BY: O. E. AYALA
DRAWN BY: J. E. AYALA
DATE: 02/09/2012
PROJECT No.:
SHEET #:

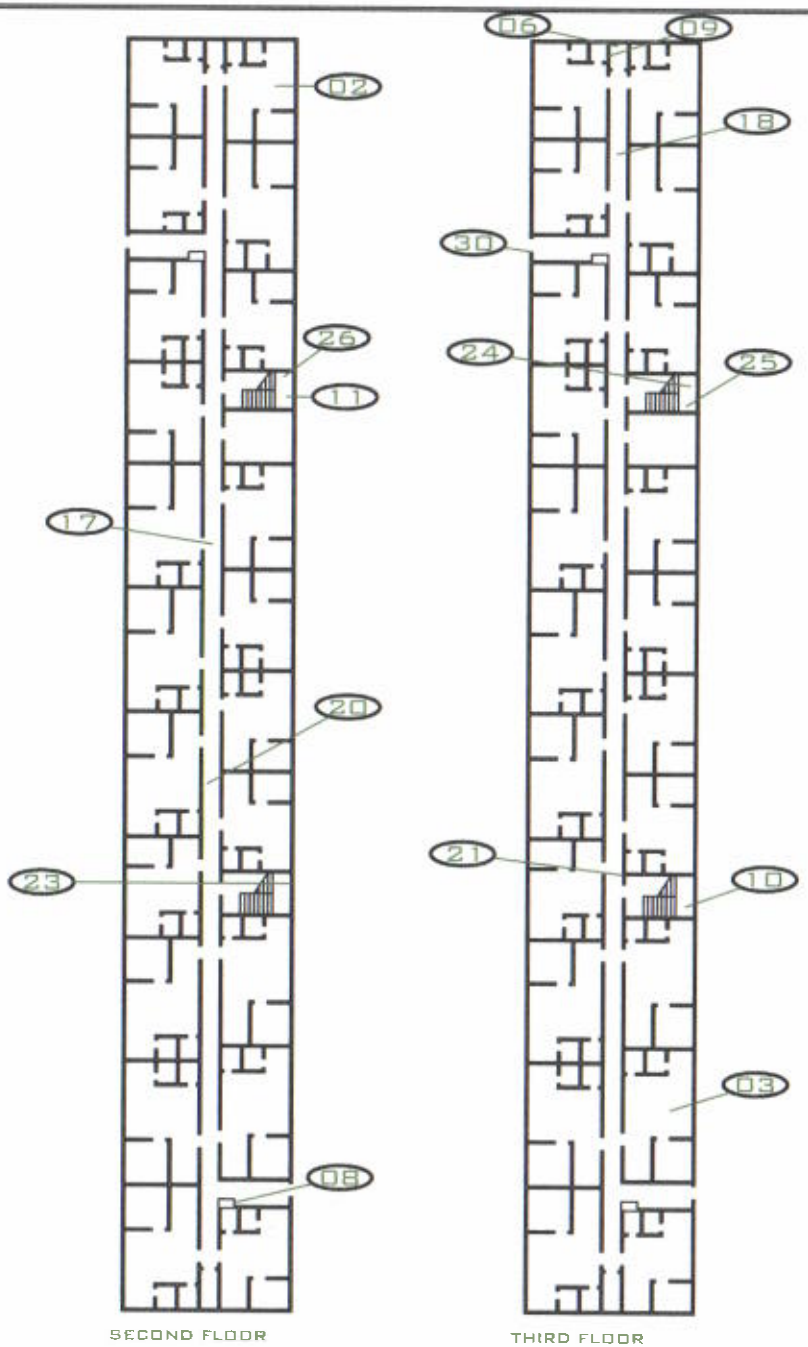

BUILDING 2903

R&A CONSULTANTS, CORP.
5820 GATEWAY EAST
EL PASO, TX 79905
PHONE: (915) 779-6605
FAX: (915) 779-6689

BUILDING 2903
FORT BLISS, TEXAS

ASBESTOS INSPECTION

LOCATION

SECOND & THIRD FLOORS

LEGEND

SAMPLE LOCATIONS

SAMPLE LOCATION NUMBER

REVISIONS

INSPECTED BY: O. E. AYALA

DRAWN BY: J. E. AYALA

DATE: 02/09/2012

PROJECT NO.:

SHEET #:

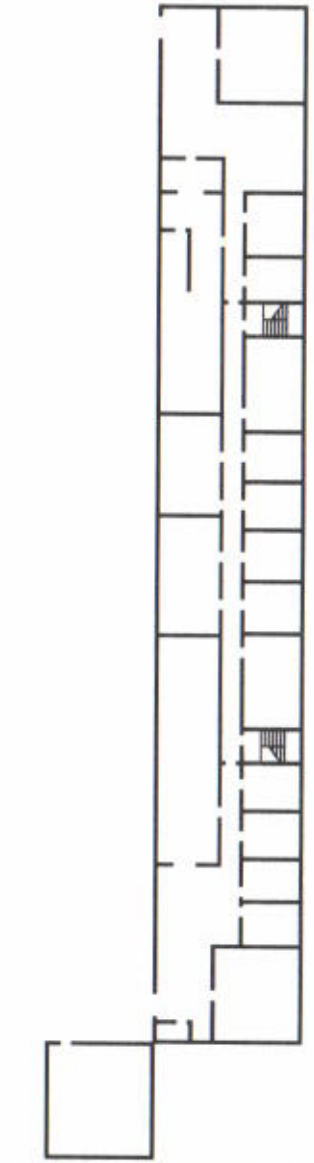

BASEMENT & MECHANICAL ROOM

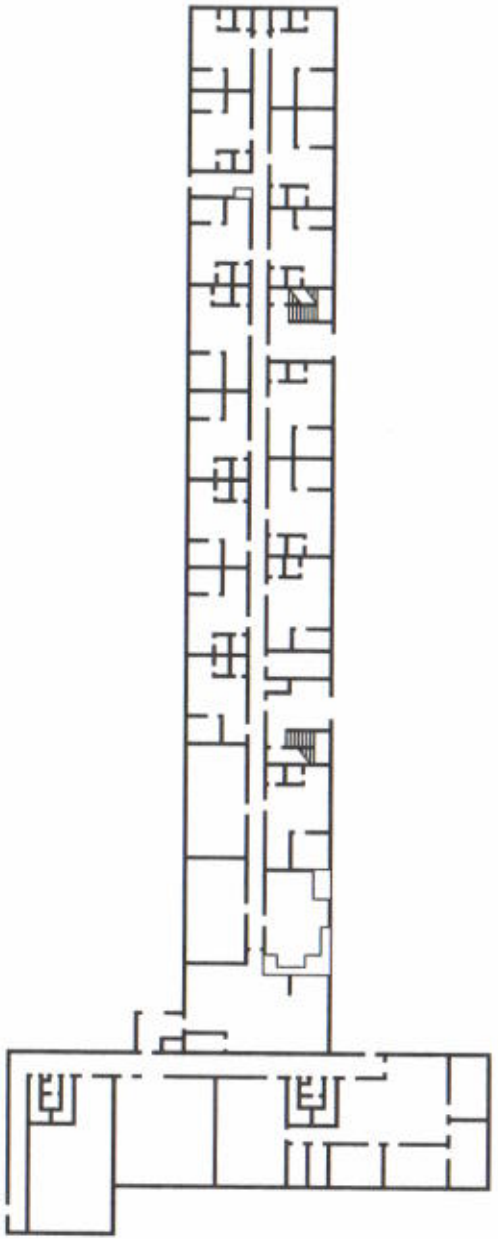

FIRST FLOOR

BUILDING 2903

NO ACM IDENTIFIED

R&A CONSULTANTS, CORP.

5620 GATEWAY EAST
EL PASO, TX 79905
PHONE: (915) 779-5605
FAX: (915) 779-5689

BUILDING 2903
FORT BLISS, TEXAS

ASBESTOS INSPECTION

LOCATION

FIRST FLOOR, BASEMENT, & MECHANICAL ROOM

LEGEND

REVISIONS

INSPECTED BY:	O. E. AYALA
DRAWN BY:	J. E. AYALA
DATE:	02/09/2012
PROJECT No.:	
SHEET #:	

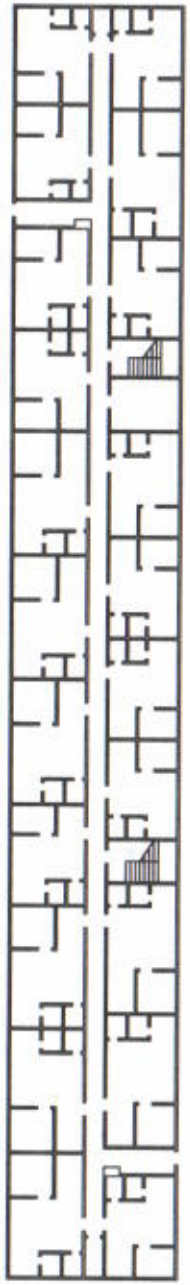

SECOND FLOOR

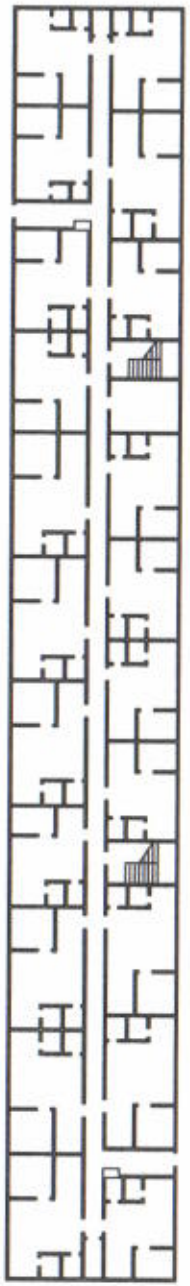

THIRD FLOOR

BUILDING 2903

NO ACM IDENTIFIED

R&A CONSULTANTS, CORP.

5920 GATEWAY EAST
EL PASO, TX 79905
PHONE: (915) 779-5605
FAX: (915) 779-5689

BUILDING 2903
FORT BLISS, TEXAS

ASBESTOS INSPECTION

LOCATION

SECOND & THIRD FLOORS

LEGEND

REVISIONS

INSPECTED BY: O. E. AYALA
DRAWN BY: J. E. AYALA
DATE: 02/09/2012
PROJECT No.:
SHEET #:

CERTIFICATIONS

TEXAS DEPARTMENT OF STATE HEALTH SERVICES

R & A CONSULTANTS CORP

is certified to perform as a

Asbestos Consultant Agency

in the State of Texas within the purview of Texas Occupations Code, chapter 1954, so long as this license is not suspended or revoked and is renewed according to the rules adopted by the Texas Board of Health.

DAVID LAKEY, M.D.
COMMISSIONER OF HEALTH

License Number: 100278

Expiration Date: 7/14/2012

Control Number: 96333

(Void After Expiration Date)

VOID IF ALTERED NON-TRANSFERABLE

TEXAS DEPARTMENT OF STATE HEALTH SERVICES

CRISP ANALYTICAL LAB LLC

is certified to perform as a

Asbestos Laboratory
PCM, PLM, TEM

in the State of Texas within the purview of Texas Occupations Code, chapter 1954, so long as this license is not suspended or revoked and is renewed according to the rules adopted by the Texas Board of Health.

DAVID LAKEY, M.D.
COMMISSIONER OF HEALTH

License Number: 300235

Expiration Date: 11/2/2013

Control Number: 95749

(Void After Expiration Date)

VOID IF ALTERED NON-TRANSFERABLE

LEAD-BASED PAINT INSPECTION REPORT

For:

Building 2903

Fort Bliss, Texas

Lead-Based Paint Inspection
At:
Building 2903
Fort Bliss, Texas

R&A Consultants, Corp. (R&A) has conducted a Lead-Based inspection at the above mentioned area located in Fort Bliss, Texas.

Summary:

The purpose of our Lead-Based Paint (LBP) sampling was to determine the presence or absence of LBP by performing an investigation of selected areas of building. A total of one-hundred twenty-seven (127) XRF readings were taken.

Lead-Based Paint means paint or other surface coatings that contain lead equal or in excess of 1.0 milligrams per square centimeter (mg/cm^2) or more than 0.5% by weight or 5,000 parts per million (ppm) by weight as established by EPA and HUD regulations. **Results indicate that five (5) of the one-hundred twenty-seven (127) XRF readings tested equal to or greater than the EPA established limit of 1.0 mg/cm^2.**

Description of Areas Tested:

The building components consisted of gypsum wallboard ceiling, concrete masonry unit (CMU) walls, metal doors, metal door frames, concrete floors, wood door, wood door frame, concrete wall, metal beam and metal door frames.

It was observed that the units have been repainted over the years. The physical conditions of the paints were in fair condition at the time of the inspection. An inventory of painted surfaces in each room equivalent within each unit as XRF tests proceeded. See the "LBP Sampling Data Sheet"

Calibration of the XRF Instrument:

Before proceeding with the investigation of painted surfaces, the XRF instrument performed a self-calibration check in accordance with the manufacturer's quality control procedures. After the warm up period, the inspector took three calibration check readings on a 1.0 mg/cm^2 lead film provided by the manufacturer. The difference among the first calibration check average and the 1.0 mg/cm^2 lead film was not greater than the 2.0 mg/cm^2 calibration check tolerance limit obtained from the XRF Performance Characteristic Sheet (PCS). Calibration was performed every two hours, when applicable, as recommended by the manufacturer. In accordance with the XRF PSC, the XRF instrument in use did not require correction for substrate bias for any substrate encountered. No XRF readings above the upper limits of the inconclusive range were encountered. Because there were no inconclusive results, no paint chip samples were required to

collect. At the end of the work shift, the inspector took a final set of two calibration check readings using the same procedure as for the initial calibration check.

Results that tested positive for Lead at or above 1.0 mg/cm^2:

This report includes a lead-based testing performed following the EPA Lead Reduction Rules (40-CFR Past 745). Results are as follows:

FORT BLISS / BUILDING 2903					
Sample I.D.	**Substrate**	**Component**	**Color**	**Test Location**	**XRF Result (mg/cm^2)**
FB2903-14	Ceramic Tile	Floor	Sand	Main Entrance Lobby	1.0
FB2903-35	Ceramic Tile	Floor	Sand	1st Floor Laundry Room 124	1.0
FB2903-56	Concrete	Floor	Yellow	Basement by Room 028 Entrance	5.0
FB2903-59	Metal	Door	Brown	Mech. Room	1.0
FB2903-126	Concrete	Floor	Yellow	Exterior Entrance To Mech. Room	5.0

Lead-based paint was detected in throughout building. Care shall be taken for surfaces that contain levels of lead below the regulatory limit of 1.0 mg/cm^2, which could create lead dust or lead-contaminated soil hazards if the paint is turned into dust by abrasion, scraping or sanding.

Conclusion:

R&A Consultants Corp. has performed a LBP inspection at Building 2903in Fort Bliss, TX in accordance with the EPA Lead Reduction Rules (40 CFR Part 745). The attached drawings indicate the locations where samples were taken.

Again, R & A Consultants, Corp. appreciates the opportunity to serve as your consultant in this matter. If you have any questions or if we may be of further service to you, please contact us at (915) 779-6605.

Sincerely,
R & A Consultants, Corp.

Oscar E. Ayala
Lead Inspector/Risk Assessor

APPENDIX A

XRF LEAD RESULTS

5820 GATEWAY EAST BLVD.
EL PASO, TEXAS 79905

R&A CONSULTANTS, CORP.

PHONE: (915) 779-6605
FAX: (915) 779-6689

LEAD BASED PAINT SAMPLING SHEET

Date: 2.9.12

Address: Fort Bliss, TX Building # 2903 Room/Description: Throughout Building

SAMPLE ID	SUBSTRATE	COMPONENT	COLOR	LOCATION	XRF READING	CLASSIFICATION	CONDITION
FB 2903-01	SR / P / W / M / V / CT / B / C / CMU	wall	Beige	1st floor corridor	0 mg/cm²	POS / NEG	FAIR / POOR
.02	SR / P / W / M / V / CT / B / C / CMU	"	"	"	0 mg/cm²	POS / NEG	FAIR / POOR
.03	SR / P / W / M / V / CT / B / C / CMU	floor	SAND	"	.08 mg/cm²	POS / NEG	FAIR / POOR
.04	SR / P / W / M / V / CT / B / C / CMU	"	"	"	.03 mg/cm²	POS / NEG	FAIR / POOR
.05	SR / P / W / M / V / CT / B / C / CMU	wall	white	1st floor Rm 101	0 mg/cm²	POS / NEG	FAIR / POOR
.06	SR / P / W / M / V / CT / B / C / CMU	ceiling	"	"	0 mg/cm²	POS / NEG	FAIR / POOR
.07	SR / P / W / M / V / CT / B / C / CMU	window	Brown	"	0 mg/cm²	POS / NEG	FAIR / POOR
.08	SR / P / W / M / V / CT / B / C / CMU	Door	varnish	"	0 mg/cm²	POS / NEG	FAIR / POOR
.09	SR / P / W / M / V / CT / B / C / CMU	Door frame	Brown	"	0 mg/cm²	POS / NEG	FAIR / POOR
.10	SR / P / W / M / V / CT / B / C / CMU	Door	Brown	1st floor west Exit Door	0.8 mg/cm²	POS / NEG	FAIR / POOR

Inspector: Dean E. Avila Signature:

XRF SERIAL NO. 1065/

Page: 2

Address: Fort Bliss, TX Building # 2903

SAMPLE ID	SUBSTRATE	COMPONENT	COLOR	LOCATION	XRF READING	CLASSIFICATION	CONDITION
FB2903 .11	SR / P / W / M / V / CT / B / C / CMU	Door frame	Brown	1st floor west exit Door	.01 mg/cm²	POS / NEG	FAIR / POOR
.12	SR / P / W / M / V / CT / B / C / CMU	Door	"	MAIN ENTRANCE	.13 mg/cm²	POS / NEG	FAIR / POOR
.13	SR / P / W / M / V / CT / B / C / CMU	Door frame	"	"	.05 mg/cm²	POS / NEG	FAIR / POOR
.14	SR / P / W / M / V / CT / B / C / CMU	floor	SAND	MAIN ENTRANCE LOBBY	1.0 mg/cm²	POS / NEG	FAIR / POOR
.15	SR / P / W / M / V / CT / B / C / CMU	WALL	Beige	"	0 mg/cm²	POS / NEG	FAIR / POOR
.16	SR / P / W / M / V / CT / B / C / CMU	Stair handrails	Brown	1st to 2nd floor	.32 mg/cm²	POS / NEG	FAIR / POOR
.17	SR / P / W / M / V / CT / B / C / CMU	Pipe	"	LOBBY	0 mg/cm²	POS / NEG	FAIR / POOR
.18	SR / P / W / M / V / CT / B / C / CMU	Door	Warnock	1st floor Rm 114	0 mg/cm²	POS / NEG	FAIR / POOR
.19	SR / P / W / M / V / CT / B / C / CMU	Door frame	Brown	"	0 mg/cm²	POS / NEG	FAIR / POOR
.20	SR / P / W / M / V / CT / B / C / CMU	wall	white	"	0 mg/cm²	POS / NEG	FAIR / POOR
.21	SR / P / W / M / V / CT / B / C / CMU	ceiling	"	"	0 mg/cm²	POS / NEG	FAIR / POOR
.22	SR / P / W / M / V / CT / B / C / CMU	window	Brown	"	0 mg/cm²	POS / NEG	FAIR / POOR
.23	SR / P / W / M / V / CT / B / C / CMU	Door trim	Brown Door	Kitchen & (Rm 125) Snack bar Area	.11 mg/cm²	POS / NEG	FAIR / POOR
.24	SR / P / W / M / V / CT / B / C / CMU	Door frame to Rm	Brown	"	.01 mg/cm²	POS / NEG	FAIR / POOR
.25	SR / P / W / M / V / CT / B / C / CMU	WALL	white	"	0 mg/cm²	POS / NEG	FAIR / POOR

Inspector: OSCAR E. ARZA

Signature:

XRF SERIAL NO. 10657

Address: Fort Bliss, TX Building # 2903

SAMPLE ID	SUBSTRATE	COMPONENT	COLOR	LOCATION	XRF READING	CLASSIFICATION	CONDITION
FB2903 .26	SR / P / W / M / V / CT / B / C / CMU	Floor	TAN	Kitchen, Smoke Area (125)	.16 mg/cm²	POS / NEG	FAIR / POOR
.27	SR / P / W / M / V / CT / B / C / CMU	Window	Brown	"	mg/cm²	POS / NEG	FAIR / POOR
.28	SR / P / W / M / V / CT / B / C / CMU	Floor	TAN	1st floor Hallway & conference & office area	.18 mg/cm²	POS / NEG	FAIR / POOR
.29	SR / P / W / M / V / CT / B / C / CMU	Wall	Beige TAN	"	mg/cm²	POS / NEG	FAIR / POOR
.30	SR / P / W / M / V / CT / B / C / CMU	Ceiling	"	"	mg/cm²	POS / NEG	FAIR / POOR
.31	SR / P / W / M / V / CT / B / C / CMU	Window	Brown	"	mg/cm²	POS / NEG	FAIR / POOR
.32	SR / P / W / M / V / CT / B / C / CMU	"	"	"	mg/cm²	POS / NEG	FAIR / POOR
.33	SR / P / W / M / V / CT / B / C / CMU	Door	"	"	mg/cm²	POS / NEG	FAIR / POOR
.34	SR / P / W / M / V / CT / B / C / CMU	Door frame	"	"	mg/cm²	POS / NEG	FAIR / POOR
.35	SR / P / W / M / V / CT / B / C / CMU	Floor	Sand	1st floor Laundry Rm (124)	1.0 mg/cm²	POS / NEG	FAIR / POOR
.36	SR / P / W / M / V / CT / B / C / CMU	Wall	White	"	mg/cm²	POS / NEG	FAIR / POOR
.37	SR / P / W / M / V / CT / B / C / CMU	Window	Brown	"	mg/cm²	POS / NEG	FAIR / POOR
.38	SR / P / W / M / V / CT / B / C / CMU	Door	"	"	mg/cm²	POS / NEG	FAIR / POOR
.39	SR / P / W / M / V / CT / B / C / CMU	Door frame	"	"	.01 mg/cm²	POS / NEG	FAIR / POOR
.40	SR / P / W / M / V / CT / B / C / CMU	Shelve	TAN	Shelve "	mg/cm²	POS / NEG	FAIR / POOR

Inspector: CESAR C. AYALA

Signature:

XRF SERIAL NO. 10057

Address: Fort Bliss, TX Building # 2903

Page: 4

SAMPLE ID	SUBSTRATE	COMPONENT	COLOR	LOCATION	XRF READING	CLASSIFICATION	CONDITION
FB2903 .41	SR / P / W / M / V / CT / B / C / CMU	Door	Unknown	1st Floor Hennessey Office Area Male Restroom (151)	.03 mg/cm²	POS / NEG	FAIR / POOR
.42	SR / P / W / M / V / CT / B / C / CMU	Door Casing	Brown	"	0 mg/cm²	POS / NEG	FAIR / POOR
.43	SR / P / W / M / V / CT / B / C / CMU	Floor	TAN	"	.16 mg/cm²	POS / NEG	FAIR / POOR
.44	SR / P / W / M / V / CT / B / C / CMU	wall	TAN	"	.69 mg/cm²	POS / NEG	FAIR / POOR
.45	SR / P / W / M / V / CT / B / C / CMU	wall	white	"	0 mg/cm²	POS / NEG	FAIR / POOR
.46	SR / P / W / M / V / CT / B / C / CMU	ceiling	"	"	0 mg/cm²	POS / NEG	FAIR / POOR
.47	SR / P / W / M / V / CT / B / C / CMU	WALL	white WALL	BASEMENT	.14 mg/cm²	POS / NEG	FAIR / POOR
.48	SR / P / W / M / V / CT / B / C / CMU	wall	white	"	0 mg/cm²	POS / NEG	FAIR / POOR
.49	SR / P / W / M / V / CT / B / C / CMU	floor	GRAY	"	.07 mg/cm²	POS / NEG	FAIR / POOR
.50	SR / P / W / M / V / CT / B / C / CMU	Door	Brown	"	0 mg/cm²	POS / NEG	FAIR / POOR
.51	SR / P / W / M / V / CT / B / C / CMU	Door frame	"	"	.03 mg/cm²	POS / NEG	FAIR / POOR
.52	SR / P / W / M / V / CT / B / C / CMU	Door	"	"	0 mg/cm²	POS / NEG	FAIR / POOR
.53	SR / P / W / M / V / CT / B / C / CMU	Door frame	"	"	.01 mg/cm²	POS / NEG	FAIR / POOR
.54	SR / P / W / M / V / CT / B / C / CMU	Duct	white	"	0 mg/cm²	POS / NEG	FAIR / POOR
.55	SR / P / W / M / V / CT / B / C / CMU	Pipe	"	"	0 mg/cm²	POS / NEG	FAIR / POOR

Inspector: [illegible] A7312

Signature: [illegible]

XRF SERIAL NO. 10657

Address: Fort Bliss, TX Building # 2903

SAMPLE ID	SUBSTRATE	COMPONENT	COLOR	LOCATION	XRF READING	CLASSIFICATION	CONDITION
FB 2903 . 56	SR / P / W / M / V / CT / B / C / CMU	floor	yellow	Basement by rm 028 entrance	5.0 mg/cm²	POS / NEG	FAIR / POOR
. 57	SR / P / W / M / V / CT / B / C / CMU	Door	Brown	Basement exit Door	.04 mg/cm²	POS / NEG	FAIR / POOR
. 58	SR / P / W / M / V / CT / B / C / CMU	Door frame	"	"	.23 mg/cm²	POS / NEG	FAIR / POOR
. 59	SR / P / W / M / V / CT / B / C / CMU	Door	"	Mech Rm	1.0 mg/cm²	POS / NEG	FAIR / POOR
. 60	SR / P / W / M / V / CT / B / C / CMU	Door frame	"	"	.33 mg/cm²	POS / NEG	FAIR / POOR
. 61	SR / P / W / M / V / CT / B / C / CMU	wall	white	"	0 mg/cm²	POS / NEG	FAIR / POOR
. 62	SR / P / W / M / V / CT / B / C / CMU	"	"	"	.09 mg/cm²	POS / NEG	FAIR / POOR
. 63	SR / P / W / M / V / CT / B / C / CMU	Pipe	"	"	0 mg/cm²	POS / NEG	FAIR / POOR
. 64	SR / P / W / M / V / CT / B / C / CMU	Pipe	"	"	0 mg/cm²	POS / NEG	FAIR / POOR
. 65	SR / P / W / M / V / CT / B / C / CMU	wall	Blue	Basement Rm 009	0 mg/cm²	POS / NEG	FAIR / POOR
. 66	SR / P / W / M / V / CT / B / C / CMU	Door	Brown	"	0 mg/cm²	POS / NEG	FAIR / POOR
. 67	SR / P / W / M / V / CT / B / C / CMU	Door frame	"	—	.03 mg/cm²	POS / NEG	FAIR / POOR
. 68	SR / P / W / M / V / CT / B / C / CMU	"	Brown	Door Basement	— mg/cm²	POS / NEG	FAIR / POOR
. 69	SR / P / W / M / V / CT / B / C / CMU	Door frame "	Brown	"	.01 mg/cm²	POS / NEG	FAIR / POOR
. 70	SR / P / W / M / V / CT / B / C / CMU	hand rail stairs	Brown	hand rail 1st to 2nd floor Stairs	.08 mg/cm²	POS / NEG	FAIR / POOR

Inspector: Oscar E. Ayala

Signature:

XRF SERIAL NO. 1065/

Address: Fort Bliss, TX Building # 2903

SAMPLE ID	SUBSTRATE	COMPONENT	COLOR	LOCATION	XRF READING	CLASSIFICATION	CONDITION
FB2903 .71	SR / P / W / M / V / CT / B / C / CMU	wall	Brick	2nd floor Corridor	0 mg/cm²	POS / NEG	FAIR / POOR
.72	SR / P / W / M / V / CT / B / C / CMU	wall	"	"	0 mg/cm²	POS / NEG	FAIR / POOR
.73	SR / P / W / M / V / CT / B / C / CMU	floor	Sand	"	.04 mg/cm²	POS / NEG	FAIR / POOR
.74	SR / P / W / M / V / CT / B / C / CMU	Door	Brown	Exit Door east side	.08 mg/cm²	POS / NEG	FAIR / POOR
.75	SR / P / W / M / V / CT / B / C / CMU	Door frame	Brown	"	.01 mg/cm²	POS / NEG	FAIR / POOR
.76	SR / P / W / M / V / CT / B / C / CMU	wall	white	Rm 224	0 mg/cm²	POS / NEG	FAIR / POOR
.77	SR / P / W / M / V / CT / B / C / CMU	ceiling	"	"	0 mg/cm²	POS / NEG	FAIR / POOR
.78	SR / P / W / M / V / CT / B / C / CMU	Door	varnish	"	0 mg/cm²	POS / NEG	FAIR / POOR
.79	SR / P / W / M / V / CT / B / C / CMU	Door frame	Brown	"	0 mg/cm²	POS / NEG	FAIR / POOR
.80	SR / P / W / M / V / CT / B / C / CMU	window	"	"	0 mg/cm²	POS / NEG	FAIR / POOR
.81	SR / P / W / M / V / CT / B / C / CMU	wall	white	Rm 212 2nd flr	0 mg/cm²	POS / NEG	FAIR / POOR
.82	SR / P / W / M / V / CT / B / C / CMU	ceiling	"	"	0 mg/cm²	POS / NEG	FAIR / POOR
.83	SR / P / W / M / V / CT / B / C / CMU	Door	varnish	"	0 mg/cm²	POS / NEG	FAIR / POOR
.84	SR / P / W / M / V / CT / B / C / CMU	Door frame	Brown	"	0 mg/cm²	POS / NEG	FAIR / POOR
.85	SR / P / W / M / V / CT / B / C / CMU	window	"	"	0 mg/cm²	POS / NEG	FAIR / POOR

Inspector: OSCAR E. AYALA

Signature:

XRF SERIAL NO. 10657

Address: Fort Bliss, TX Building # 2903

SAMPLE ID	SUBSTRATE	COMPONENT	COLOR	LOCATION	XRF READING	CLASSIFICATION	CONDITION
FB 2903 .86	SR / P / W / M / V / CT / B / C / CMU	Door	Brown	2nd floor storage	0 mg/cm²	POS / NEG	FAIR / POOR
.87	SR / P / W / M / V / CT / B / C / CMU	Door frame	"	"	0 mg/cm²	POS / NEG	FAIR / POOR
.88	SR / P / W / M / V / CT / B / C / CMU	wall	white	"	0 mg/cm²	POS / NEG	FAIR / POOR
.89	SR / P / W / M / V / CT / B / C / CMU	ceiling	"	"	0 mg/cm²	POS / NEG	FAIR / POOR
.90	SR / P / W / M / V / CT / B / C / CMU	hand rail stairs	brown	2nd to 3rd floor hand rail stairs	.08 mg/cm²	POS / NEG	FAIR / POOR
.91	SR / P / W / M / V / CT / B / C / CMU	wall yellow/tan	yellow	1st & 2nd floor lobby Plaster	0 mg/cm²	POS / NEG	FAIR / POOR
.92	SR / P / W / M / V / CT / B / C / CMU	Door	brown	3rd floor Entrance Door	0 mg/cm²	POS / NEG	FAIR / POOR
.93	SR / P / W / M / V / CT / B / C / CMU	Door frame	"	"	0 mg/cm²	POS / NEG	FAIR / POOR
.94	SR / P / W / M / V / CT / B / C / CMU	stairs	Beige	ladder to Roof	0 mg/cm²	POS / NEG	FAIR / POOR
.95	SR / P / W / M / V / CT / B / C / CMU	wall	Beige	3rd floor corridor	0 mg/cm²	POS / NEG	FAIR / POOR
.96	SR / P / W / M / V / CT / B / C / CMU	floor	tan	"	.01 mg/cm²	POS / NEG	FAIR / POOR
.97	SR / P / W / M / V / CT / B / C / CMU	wall	white	2nd floor storage	0 mg/cm²	POS / NEG	FAIR / POOR
.98	SR / P / W / M / V / CT / B / C / CMU	Door	Brown	"	0 mg/cm²	POS / NEG	FAIR / POOR
.99	SR / P / W / M / V / CT / B / C / CMU	Door frame	brown	"	0 mg/cm²	POS / NEG	FAIR / POOR
.100	SR / P / W / M / V / CT / B / C / CMU	ceiling	white	"	0 mg/cm²	POS / NEG	FAIR / POOR

Inspector: OSCAR AYALA

Signature:

XRF SERIAL NO. 10657

Address: Fort Bliss, TX Building # 2703

Page: 8

SAMPLE ID	SUBSTRATE	COMPONENT	COLOR	LOCATION	XRF READING	CLASSIFICATION	CONDITION
FB2703-101	SR / P / W / M / V / CT / B / C / CMU	wall	white	Rm 325	mg/cm²	POS / NEG	FAIR / POOR
.102	SR / P / W / M / V / CT / B / C / CMU	Ceiling	"	"	mg/cm²	POS / NEG	FAIR / POOR
.103	SR / P / W / M / V / CT / B / C / CMU	window	Brown	"	mg/cm²	POS / NEG	FAIR / POOR
.104	SR / P / W / M / V / CT / B / C / CMU	Door	varnish	"	mg/cm²	POS / NEG	FAIR / POOR
.105	SR / P / W / M / V / CT / B / C / CMU	Door frame	Brown	"	mg/cm²	POS / NEG	FAIR / POOR
.106	SR / P / W / M / V / CT / B / C / CMU	Door	Brown	3rd floor Exit Door	mg/cm²	POS / NEG	FAIR / POOR
.107	SR / P / W / M / V / CT / B / C / CMU	Door frame	"	"	mg/cm²	POS / NEG	FAIR / POOR
.108	SR / P / W / M / V / CT / B / C / CMU	Door	varnish	3rd floor Rm 305	mg/cm²	POS / NEG	FAIR / POOR
.109	SR / P / W / M / V / CT / B / C / CMU	Door frame	Brown	"	mg/cm²	POS / NEG	FAIR / POOR
.110	SR / P / W / M / V / CT / B / C / CMU	wall	white	"	mg/cm²	POS / NEG	FAIR / POOR
.111	SR / P / W / M / V / CT / B / C / CMU	ceiling	"	"	mg/cm²	POS / NEG	FAIR / POOR
.112	SR / P / W / M / V / CT / B / C / CMU	window	Brown	"	mg/cm²	POS / NEG	FAIR / POOR
.113	SR / P / W / M / V / CT / B / C / CMU	Gutter	Beige	Exterior	mg/cm²	POS / NEG	FAIR / POOR
.114	SR / P / W / M / V / CT / B / C / CMU	"	"	"	mg/cm²	POS / NEG	FAIR / POOR
.115	SR / P / W / M / V / CT / B / C / CMU	"	"	"	mg/cm²	POS / NEG	FAIR / POOR

Inspector: OSCAR AYALA

Signature:

XRF SERIAL NO. 10657

Address: Fort Bliss, TX Building # 2983

SAMPLE ID.	SUBSTRATE	COMPONENT	COLOR	LOCATION	XRF READING	CLASSIFICATION	CONDITION
SB2903 .116	SR / P / W / M / V / CT / B / C / CMU	stair handrail	Brown	Exterior (exit entrance) stairs main entrance hallway	.18 mg/cm²	POS / NEG	FAIR / POOR
.117	SR / P / W / M / V / CT / B / C / CMU	"	"	west entrance "	— mg/cm²	POS / NEG	FAIR / POOR
.118	SR / P / W / M / V / CT / B / C / CMU	wall	Beige	Exterior	— mg/cm²	POS / NEG	FAIR / POOR
.119	SR / P / W / M / V / CT / B / C / CMU	"	"	"	— mg/cm²	POS / NEG	FAIR / POOR
.120	SR / P / W / M / V / CT / B / C / CMU	Door	Brown	Exterior west main door entrance	.23 mg/cm²	POS / NEG	FAIR / POOR
.121	SR / P / W / M / V / CT / B / C / CMU	Door frame	"	"	.08 mg/cm²	POS / NEG	FAIR / POOR
.122	SR / P / W / M / V / CT / B / C / CMU	stairs handrail	"	To basement stair east	.08 mg/cm²	POS / NEG	FAIR / POOR
.123	SR / P / W / M / V / CT / B / C / CMU	"	"	" west	.01 mg/cm²	POS / NEG	FAIR / POOR
.124	SR / P / W / M / V / CT / B / C / CMU	balcony	Brown	Back 3rd floor	— mg/cm²	POS / NEG	FAIR / POOR
.125	SR / P / W / M / V / CT / B / C / CMU	"	"	Back 2nd	— mg/cm²	POS / NEG	FAIR / POOR
.126	SR / P / W / M / V / CT / B / C / CMU	floor	Yellow	Exterior Entrance to Mech Rm	5.0 mg/cm²	POS / NEG	FAIR / POOR
.127	SR / P / W / M / V / CT / B / C / CMU	hand rails stair	Brown	Entrance to (manager) area 1st floor offices	.03 mg/cm²	POS / NEG	FAIR / POOR
.128	SR / P / W / M / V / CT / B / C / CMU				mg/cm²	POS / NEG	FAIR / POOR
.129	SR / P / W / M / V / CT / B / C / CMU				mg/cm²	POS / NEG	FAIR / POOR
.130	SR / P / W / M / V / CT / B / C / CMU				mg/cm²	POS / NEG	FAIR / POOR

Inspector: OSCAR E. AYALA

Signature:

XRF SERIAL NO. 10657

APENDIX B

SAMPLE LOCATIONS DRAWING

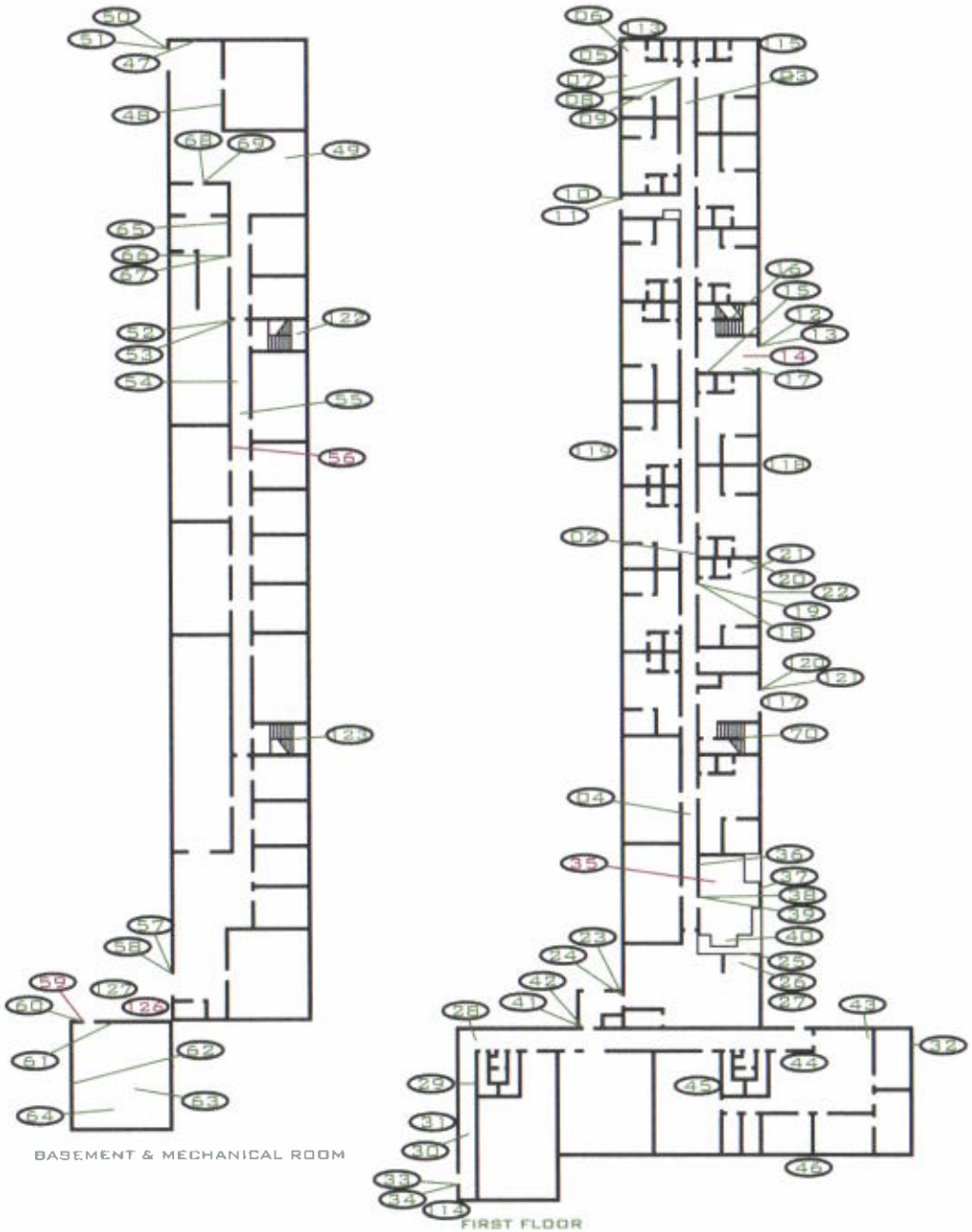

BUILDING 2903

R&A CONSULTANTS, CORP.
6630 GATEWAY EAST
EL PASO, TX 79905
PHONE: (915) 779-6605
FAX: (915) 779-6629

BUILDING 2903
FORT BLISS, TEXAS

LEAD-BASED PAINT INSPECTION

LOCATION
FIRST FLOOR, BASEMENT, & MECHANICAL ROOM

LEGEND
SAMPLE LOCATIONS
SAMPLE LOCATION NUMBER

REVISIONS

INSPECTED BY: D. E. AYALA
DRAWN BY: J. E. AYALA
DATE: 02/09/2012
PROJECT NO.:
SHEET #:

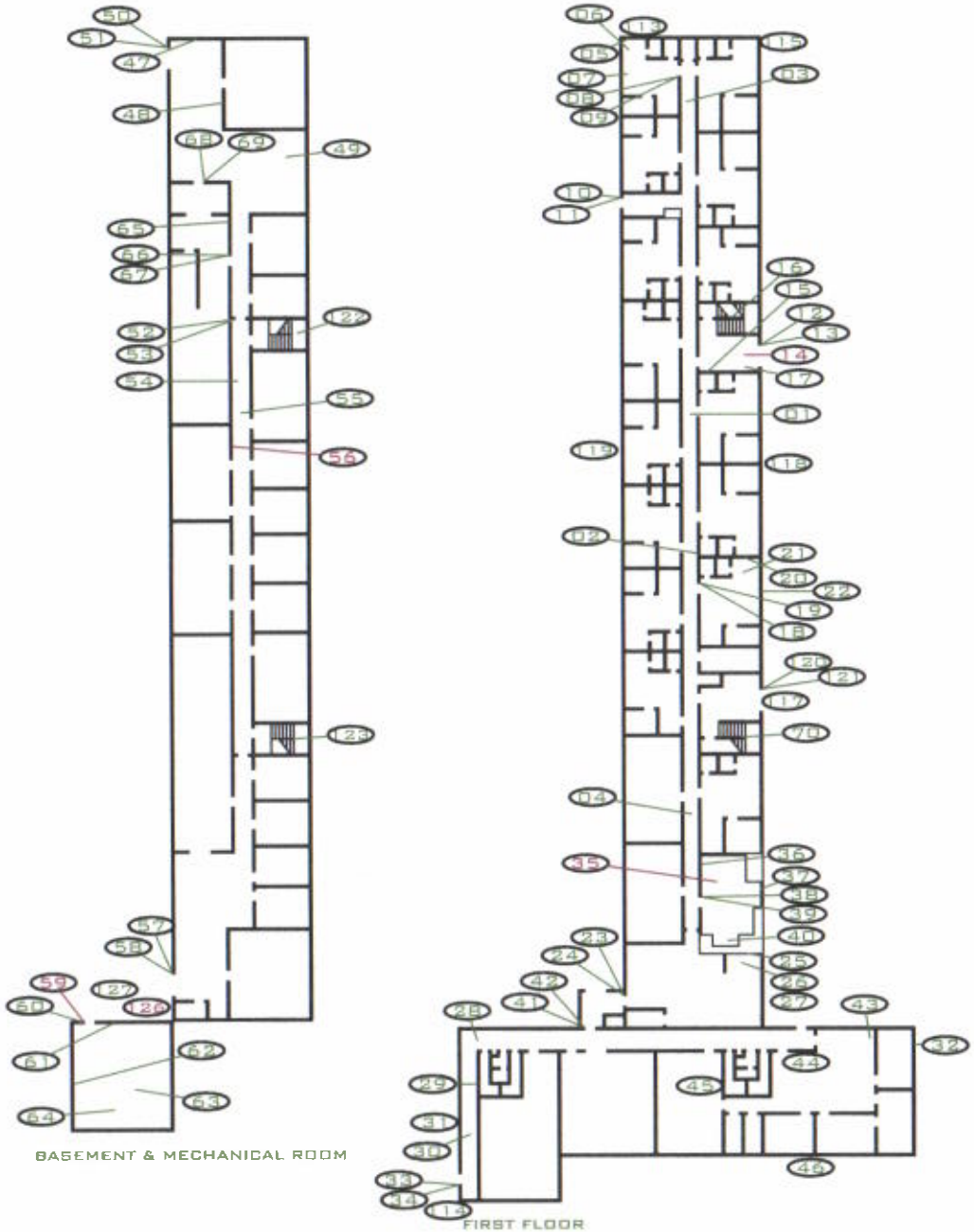

BUILDING 2903

R&A CONSULTANTS, CORP.
8880 GATEWAY EAST
EL PASO, TX 79906
PHONE: (915) 779-8605
FAX: (915) 779-8689

BUILDING 2903
FORT BLISS, TEXAS

LEAD-BASED PAINT INSPECTION

LOCATION
FIRST FLOOR, BASEMENT, & MECHANICAL ROOM

LEGEND
SAMPLE LOCATIONS
(#) SAMPLE LOCATION NUMBER

REVISIONS
1
2

INSPECTED BY: O. E. AYALA
DRAWN BY: J. E. AYALA
DATE: 02/09/2012
PROJECT NO.:
SHEET #:

APENDIX C

CERTIFICATIONS

TEXAS DEPARTMENT OF STATE HEALTH SERVICES

Be it known that

R & A CONSULTANTS CORP

is certified to perform as a

Lead Firm

in the State of Texas and is hereby governed by the rights, privileges and responsibilities set forth in Texas Occupations Code, Chapter 1955 and Title 25, Texas Administrative Code, Chapter 295 relating to Texas Environmental Lead Reduction, as long as this license is not suspended or revoked.

David L. Lakey, M.D.
Commissioner of Health

License Number: 2110537

Control Number 6276

Expiration Date: 12/6/2012

(Void After Expiration Date)

VOID IF ALTERED NON-TRANSFERABLE

TEXAS DEPARTMENT OF STATE HEALTH SERVICES

Be it known that

OSCAR E AYALA

is certified to perform as a

Lead Risk Assessor

in the State of Texas and is hereby governed by the rights, privileges and responsibilities set forth in Texas Occupations Code, Chapter 1955 and Title 25, Texas Administrative Code, Chapter 295 relating to Texas Environmental Lead Reduction, as long as this license is not suspended or revoked.

David L. Lakey, M.D.
Commissioner of Health

License Number: 2070966

Expiration Date: 8/30/2013

Void After Expiration Date

VOID IF ALTERED

Control Number 6658

NON-TRANSFERABLE