5000 PSI AIR HEAT EXCHANGER

Requirements Document

B1215 Steam Plant Heat-Exchanger

Rev 1

5000 PSI AIR HEAT EXCHANGER
Requirements Document
B1215 Steam Plant Heat-Exchanger

Table of Contents

1.0 SCOPE

2.0 GENERAL
- 2.1 BASIC DESIGN
- 2.2 SUBMITTALS
  - 2.2.1 Proposal Information
  - 2.2.2 Shop Drawings
  - 2.2.3 Product Data
  - 2.2.4 Test Reports
  - 2.2.5 Certificates
- 2.3 QUALITY ASSURANCE
- 2.4 DELIVERY, STORAGE, AND HANDLING
- 2.5 SPARE PARTS

3.0 PRODUCTS
- 3.1 MATERIALS AND EQUIPMENT
  - 3.1.1 Standard Products
  - 3.1.2 Nameplates
  - 3.1.3 Asbestos Prohibition
  - 3.1.4 Body, Stationary Head, Cover
  - 3.1.5 Body Flanges, Tube Sheet, Tubes
  - 3.1.6 Connections: Hub Connectors, Flanges, Couplings
  - 3.1.7 Gaskets for Flanges
  - 3.1.8 Studs and Nuts
- 3.2 HEAT EXCHANGERS
  - 3.2.1 Type
  - 3.2.2 General Construction
  - 3.2.3 Performance
  - 3.2.4 Dimensions
- 3.3 SYSTEM EQUIPMENT AND ACCESSORIES
  - 3.3.1 Lifting and Support Systems
  - 3.3.2 Vent Connection
  - 3.3.3 Coating/Paint System

4.0 EXECUTION
- 4.1 Connections
- 4.2 Testing and Cleaning
- 4.3 Pressure Testing
- 4.4 Cleaning
- 4.5 Lead Time

Appendix A

Heat Exchanger Data Sheet

1.0 SCOPE

This document provides the requirements for the procurement of one heat-exchanger that will serve as a Joules-Thompson heater for the 5000 psi Air Reducing Station at the Steam Plant, B1215.

2.0 GENERAL

2.1 BASIC DESIGN

2.1.1 The heat exchanger shall be:

- 2.1.1.1 designed using Heat Transfer Research, Incorporated, HTRI, software
- 2.1.1.2 complimentarily designed to TEMA standards
- 2.1.1.3 designed to heat air (5000 psig design, 4250 psig maximum operation, 2800 psig minimum operation) with 125 psig saturated steam metered by a control valve. See the data sheet in Appendix A for performance requirements.
- 2.1.1.4 designed and stamped per ASME Section VIII Division 1 code and provided with a nameplate
- 2.1.1.5 furnished with components in accordance with applicable ASTM and MSS SP standards or other applicable ASME codes
- 2.1.1.6 provided with process connections per data sheet in Appendix A
- 2.1.1.7 provided with support saddles and lifting lugs per Appendix A
- 2.1.1.8 fabricated with new materials that conform to the Buy American Act

2.2 SUBMITTALS

Government (NASA) approval is required for submittals in each section herein:

2.2.1 Proposal Information

- 2.2.1.1 The vendor's proposal shall include the following:
  - 2.2.1.1.1 completed datasheets, following those given in TEMA General Fabrication and Performance Information, Section 3, Figure G-5.2M Heat Exchanger Specification Sheet,
  - 2.2.1.1.2 Following the data sheets included in Appendix A, a written statement indicating complete compliance of the new heat exchanger provided herein with datasheets in Appendix A.
- 2.2.1.2 The Vendor's proposal shall include drawings and sketches that are sufficient to describe the heat exchanger construction, to be provided as required in Appendix A.
- 2.2.1.3 Design features that are not fully defined by the nomenclature in TEMA, Section 1
- 2.2.1.4 The proposal shall include detailed description of all exceptions to the requirements herein.
- 2.2.1.5 The Vendor shall supply the following components:
  - 2.2.1.5.1 Data and Information indicating compliance to specified requirements for bolts, nuts, and gaskets with torque requirements suitable for pressures and temperatures identified.
- 2.2.1.6 Identify the cost in dollars for the goods including all shipping and insurance to the point of delivery identified herein. The time for delivery of goods shall be identified in the Vendor's proposal.

2.2.2 Shop Drawings

2.2.2.1 On award of the work, the Vendor shall submit, for review by the Government, outline drawings for the heat exchanger. The drawings shall include at least the following information:

2.2.2.1.1 service, item number, project name and location, Government's order number, Vendor's shop order number, serial number, and other special identification numbers

2.2.2.1.2 design pressure, test pressure, design temperature, minimum design metal temperature (MDMT), and any restriction on testing or operation of the heat exchanger

2.2.2.1.3 maximum allowable working pressure (MAWP) in the corroded condition and at the design temperature for the shell side and tube side

2.2.2.1.4 connection sizes, location, orientation, projection, direction of flow and, if flanged, the rating and facing type

2.2.2.1.5 measurement instruments used and their calibration data

2.2.2.1.6 overall dimensions of the heat exchanger

2.2.2.1.7 mass of the heat exchanger, empty and full of water, and of any removable components with a mass greater than 60 lb

2.2.2.1.8 specified corrosion allowance for each side of the heat exchanger

2.2.2.1.9 references to the applicable code and the Government's specification

2.2.2.1.10 requirements for non-destructive examination (NDE)

2.2.2.1.11 requirements for material impact testing

2.2.2.1.12 requirements for surface preparation and painting

2.2.2.1.13 gasket materials, type and thickness

2.2.2.1.14 location and orientation of nameplates, lifting lugs, grounding clips or other attachments

2.2.2.1.15 location of the center of gravity of the heat exchanger (empty and full of water)

2.2.2.2 The review of shop drawing documents by the Government shall not relieve the Vendor and Original Equipment Manufacturer, OEM, of the responsibility for meeting the requirements herein and the purchase order.

2.2.2.3 Information Required After Outline Drawings Are Reviewed:

2.2.2.3.1 The Vendor shall submit gasket details, including type and material, on a separate drawing. This drawing shall not be marked with any restrictions for use.

2.2.2.4 Upon receipt of the Government's review comments on the outline drawings, the Vendor shall submit copies of all detailed drawings for the Government's review. These shall fully describe the heat exchanger and shall include at least the following information:

2.2.2.4.1 complete bills of materials, including the material specification

2.2.2.4.2 special installation and maintenance instructions including lifting and handling.

2.2.2.5 After final review the Vendor shall revise all the required drawings, welding procedures, and submit each with the following text marked on every sheet separately and dated: "CERTIFIED FOR CONSTRUCTION."

2.2.2.6 Reports and Records

2.2.2.6.1 After the heat exchanger is completed, the OEM shall furnish to the Government with the following documents in Adobe Acrobat PDF searchable format and one hard copy, specified by the Government:

2.2.2.6.1.1 "as-built" datasheet, and Form U1 Manufacturer's Data Report for Pressure Vessels; Form U-5 Manufacturer's Data Report Supplementary Sheet; Photo of label plate; photo of serial number label plate; General Fabrication and Performance Information sheet in accordance with Figure G-5.2M Heat exchanger Specification Sheet TEMA;
2.2.2.6.1.2 all outline and detail drawings, marked "CERTIFIED AS-BUILT";
2.2.2.6.1.3 certified mill test reports for all pressure parts, including tubes (each material test report shall be identified by a part number)
2.2.2.6.1.4 complete certified bill of materials suitable for obtaining all replacement parts, including quantity, description, material specification, and identification of each part
2.2.2.6.1.5 temperature charts of all postweld heat treatments, if applicable
2.2.2.6.1.6 completed manufacturer's data report in accordance with the pressure design code
2.2.2.6.1.7 nameplate photo
2.2.2.6.1.8 non-destructive examination (NDE) map
2.2.2.6.1.9 all associated NDE reports, including radiographic, magnetic-particle, liquid-penetrant, ultrasonic, hardness, positive material identification (PMI), and any other reports as applicable
2.2.2.6.1.10 leak-test results
2.2.2.6.1.11 hydrostatic test records in the form of a chart or certification

2.2.3 Product Data
- 2.2.3.1 Gaskets
- 2.2.3.2 Studs and Nuts
- 2.2.3.3 Primer and final paint coatings

2.2.4 Test Reports
- 2.2.4.1 Testing Results
- 2.2.4.2 Cleaning

2.2.5 Certificates
- 2.2.5.1 Certificate of Shop Compliance
- 2.2.5.2 Certificate of Shop Inspection
- 2.2.5.3 Bill of Materials
- 2.2.5.4 Written certification from OEM that all materials of construction are new, unused, and not remanufactured.

2.3 QUALITY ASSURANCE

Vendor shall act on behalf and provide OEM's material and goods. Vendor shall be responsible to respond to all purchase and specification requirements.

Procedures and welders must be qualified in accordance with the code under which the welding is specified to be accomplished.

OEM shall submit written certification that all materials are new, unused, and not remanufactured.

2.4 DELIVERY, STORAGE, AND HANDLING

2.4.1 The goods shall be manufactured for:

NASA Langley Research Center
14 West Taylor Street
Building 1215
Hampton, Virginia 23681

2.4.2 Deliver the approved completed goods to:

NASA Langley Research Center
4 South Marvin Street
Building 1206
Hampton, Virginia 23681

2.4.3 Protect all equipment delivered and placed in storage from the weather, excessive humidity and excessive temperature variation, and dirt, dust, or other contaminants. The heat exchanger shall be boxed and crated suitable for shipping and handling with a forklift and/or crane. Lift points shall be clearly marked. The shipping container shall not impart any scratches to paint, be clearly marked and labeled on the exterior of the shipping container with the heat exchanger data for identification.

The heat exchanger shall be cleaned and dry prior to shipping. All openings shall be supplied with suitable protective cover to prevent foreign objects or debris from entering the heat exchanger.

2.5 SPARE PARTS

Provide spare parts as indicated below and packaged to protect the parts and include with the shipment of the heat exchanger.

2.5.1 Provide and deliver one set of spare gaskets of each size for the heat exchanger.

3.0 PRODUCTS

3.1 MATERIALS AND EQUIPMENT

3.1.1 Standard Products

Provide all materials, goods, and equipment herein which are new, and the standard products of the OEM regularly engaged in the manufacture of such products and that essentially duplicate items. Provide a source for spare parts. Equipment must be supported by a service organization that is in the service area and reasonably convenient to the delivery site.

3.1.2 Nameplates

A stainless steel plate on the heat exchanger shall be provided having the manufacturer's name, address, type or style, model (if applicable), National board number, serial number, date, performance data, MAWP with coincidental design temperature, MDMT, and catalog number permanently (if applicable) secured to the heat exchanger.

3.1.3 Asbestos Prohibition

Asbestos and asbestos-containing products will not be accepted.

3.1.4 Shell, Bonnet, and Cover

The heat exchanger shell shall be constructed of ASTM A106 Grade B seamless pipe. The shell flange and bonnet shall be constructed of forged carbon steel with bolt patterns in accordance with ASME B16.5. The shell cover shall be carbon steel. See Appendix A for additional information.

3.1.5 Tube Sheet and Tubes

Tube sheet material shall conform to ASTM A516 Gr70. Tubes shall be seamless carbon steel with a minimum average thickness calculated by OEM for the required process conditions as identified in Appendix A. The decrease in tube thickness due to the bending process shall be accounted for in calculations.

3.1.6 Connections: Hub Connectors, Flanges, Couplings

The final tube side inlet and outlet connections shall be carbon steel hub connectors (e.g. Grayloc or Oteco). Buttweld hub connectors shall be furnished by the Government for OEM to weld onto the heat exchanger. OEM shall provide 2” XXS ASTM A106 seamless pipe connections onto bonnet for weldment of hub connectors.

Shell side inlet and outlet connections shall be Class 300, raised-face, weldneck type flanges conforming to ASTM A105. Flanges must have the manufacturer’s trademark and flange information affixed in accordance with MSS SP-25. Couplings shall conform to ASTM A105 and MSS SP-97 with threads conforming to ASME B1.20.1.

3.1.7 Gaskets

Gaskets must be suitable for pressures and temperatures of the required process conditions as identified in Appendix A.

3.1.8 Studs and Nuts

New studs and nuts shall be provided and comply with ASTM A193 Grade B7 and ASTM A194 Grade 2H, respectively. Headed bolts are not allowed. All bolting shall be in compliance with ASME PCC-1. Torque values shall be provided and installation torquing

shall be in three steps. Identify wet or dry torque values on drawings.

3.2 HEAT EXCHANGER

3.2.1 Type

Heat exchanger shall be shell and tube, TEMA Type BEU with a stationary head and a removable U-tube bundle. Manufacturer to determine if impingement plates are required to ensure maximum tube life. Refer to the datasheet in Appendix A for preliminary nozzle locations.

3.2.2 General Construction

Heat exchanger must be constructed and tested in accordance with ASME BPVC SEC VIII D1 and certified with a permanent ASME and National Board stamp secured to unit.

Tubes shall be free to expand within shell. Shell shall be of seamless steel pipe. Tube connections to plates must be leakproof. All materials of construction shall be new with no remanufactured parts or materials.

3.2.3 Performance

Heat exchanger shall heat air in the tube side using 125 psig steam on the shell side at the performance requirements as identified in Appendix A.

3.2.4 Dimensions

Heat exchangers longer than 6 feet shall be reviewed by NASA.

3.3 SYSTEM EQUIPMENT AND ACCESSORIES

3.3.1 Lifting and Support Systems

Heat exchanger shall be provided with lifting lugs: one lugs (minimum) shall be provided for the shell; one lug (minimum) shall be provided for the bonnet.

Heat exchanger shall be provided with support legs (two minimum) that will allow for bolting down onto structure steel frame members.

3.3.2 Vent Connection

Vent (intermediate) connection shall be provided as indicated in APPENDIX A.

3.3.3 Coating/Paint System

Heat exchanger must be coated on its exterior with primer and a final paint system. Both primer and final paint systems shall be suitable for a sustained temperature of 400 degrees F. Color shall be Light Grey. Surface preparation prior to painting shall be White metal blast

cleaning: SSPC SP5, NACE No. 1, SA3. Bolts, nuts, flange face, and gaskets shall not be painted. Primer and final paint coating thickness shall be as recommended by the paint manufacturer for the paint system.

4.0 EXECUTION

4.1 Testing and Cleaning

Submit performance and all test reports to demonstrate compliance with the specified performance criteria for the completed goods.

4.2 Pressure Testing

Hydrostatic testing of the assembled heat exchanger at pressure in accordance with Code shall be completed with clean potable water free of chlorides. Results of test results shall be provided. Leakage allowance is zero. All residual water shall be completely removed after testing. Provide blind flanges and plugs suitable for the pressure and service as required for testing. All test water shall be completely removed.

4.3 Cleaning

Prior to hydrostatic tests, the heat exchanger shall be cleaned of all interior and exterior metal surface oils or metal preservatives, dust, dirt, rust. The Original Equipment Manufacturer will be responsible for maintaining the heat exchanger in a clean condition until delivery of goods at NASA.

4.4 Lead Time

The lead time for delivery to NASA after award of contract shall be no longer than 18 weeks. This lead time includes time for OEM to develop a design and drawings, time for the Government to review the design and drawings, time for fabrication by OEM, and time for delivery.

APPENDIX A

1. Heat Exchanger Data Sheet

NASA LANGLEY RESEARCH CENTER - HAMPTON, VA

SHELL AND TUBE HEAT EXCHANGER DATA SHEET

1	Facility	B1215 STEAM PLANT					Project No.	JTHEX5000		
2	Address	14 W TAYLOR ST, MS 177, HAMPTON, VA 23681					Date	6/23/2026	Rev	1
3	Equipment Tag	HEX-1								
4	Service of Unit	5000 PSI AIR								
5	Size	Note 1 x Note 1	inch	Type	BEU in Horizontal		Connected In	N/A Parallel	N/A Series	
6	Surf/Unit (Gross/Eff)	Note 2 / Note 1	ft2	Shell/Unit	1		Surf/Shell (Gross/Eff)	/	ft2	

7	PERFORMANCE OF ONE UNIT					
8	Fluid Allocation		Shell Side		Tube Side	
9	Fluid Name		STEAM (IN/OUT)		AIR (IN/OUT)	
10	Fluid Quantity, Total	lb/hr	414		16840 (3740 SCFM)	
11	Vapor (In/Out)	Note 3			16840	16840
12	Liquid					
13	Steam (Saturated)	Note 3	414			
14	Water/Condensate	Note 3		414		
15	Noncondensables					
16	Temperature (In/Out)		353	353	60	126.4
17	Specific Gravity	Note 2			0.324	0.282
18	Viscosity	Cp Note 3	0.015	0.152	0.027	0.027
19	Molecular Weight, Vapor		18		29	
20	Molecular Weight, Noncondensables					
21	Specific Heat	Btu/lb-F			0.324 (Note 3)	0.305 (Note 3)
22	Thermal Conductivity	Btu/hr-ft-F			0.026 (Note 3)	0.026 (Note 3)
23	Latent Heat	Btu/lb	869			
24	Inlet Pressure	psia	139.7		4264.7	
25	Velocity	ft/sec				
26	Pressure Drop, Allow/Calc	psi	6		3	
27	Fouling Resistance (min)	ft2-hr-F/Btu	0.0005 (Note 1)		0.001 (Note 1)	

28	Heat Exchanged	359,900	Btu/hr (Note 3)		MTD (Corrected)	257	F
29	Transfer Rate, Service	Note 1	Btu/ft2-hr-F	Clean	Btu/ft2-hr-F	Actual	Btu/ft2-hr-F

30	CONSTRUCTION OF ONE SHELL				Sketch (Bundle/Nozzle Orientation)
31			Shell Side	Tube Side	See Page 2 of this data sheet.
32	Design/Test Pressure		psig	635/953	5000/7500
33	Design Temperature (MDMT)		F	400 (-20)	400 (-20)
34	No Passes per Shell			1	2
35	Corrosion Allowance		inch	0.0625	N/A
36	Connections	In	inch	4" Class 300	Note 4
37	Size &	Out	inch	4" Class 300	Note 4
38	Rating	Intermediate		3/4" 3000# FNPT	

39	Tube No.	Note 1	OD	Note 1	inch	Thk(Avg)	Note 1	inch	Length	Note 1	ft	Pitch	Note 1 inch
40	Tube Type	Plain, Seamless				Material:	Carbon Steel					Tube pattern:	Note 1
41	Shell/Flanges	ASTM A106 Gr B / ASTM A105 or ASTM A350							Shell Cover	Carbon Steel			
42	Bonnet	Forged Carbon Steel							Channel Cover	N/A			
43	Tubesheet-Stationary	ASTM A516 Gr 70							Tubesheet-Floating	N/A			
44	Floating Head Cover	N/A							Impingement Plate	Note 1			
45	Baffles-Cross	Carbon Steel											
46	Baffles-Long	N/A				Seal Type	N/A						
47	Supports-Tube					U-Bend	Note 1					Type	
48	Bypass Seal Arrangement	N/A				Tube-Tubesheet Joint	Note 1						
49	Expansion Joint	N/A				Type	N/A						
50													
51	Gaskets-Shell Side	Note 1				Tube Side	Note 1						
52	-Floating Head	N/A											
53	Code Requirements	ASME Section VIII Division 1							TEMA Class	Note 1			
54													

55 Remarks:

56 Note 1: Calculated, confirmed or determined by manufacturer.

57 Note 2: Manufacturer shall provide a minimum of 15% in excess of effective area.

58 Note 3: Manufacturer shall verify all fluid properties and heat exchanged.

59 Note 4: Provide a 2" XXS buttweld connection to the bonnet and weld on Government furnished reducing hub connector, which is a 2" Sch XXS buttweld x 1" hub reducing connector.

60 Note 5: Refer to the associated requirements document for additional information.

NASA LANGLEY RESEARCH CENTER - HAMPTON, VA						
SHELL AND TUBE HEAT EXCHANGER DATA SHEET						
1	Facility	B1215 STEAM PLANT	Project No.	JTHEX5000		
2	Address	14 W TAYLOR ST, MS 177, HAMPTON, VA 23681	Date	6/23/2026	Rev	1
3	Equipment Tag	HEX-1				
4	Service of Unit	5000 PSI AIR				
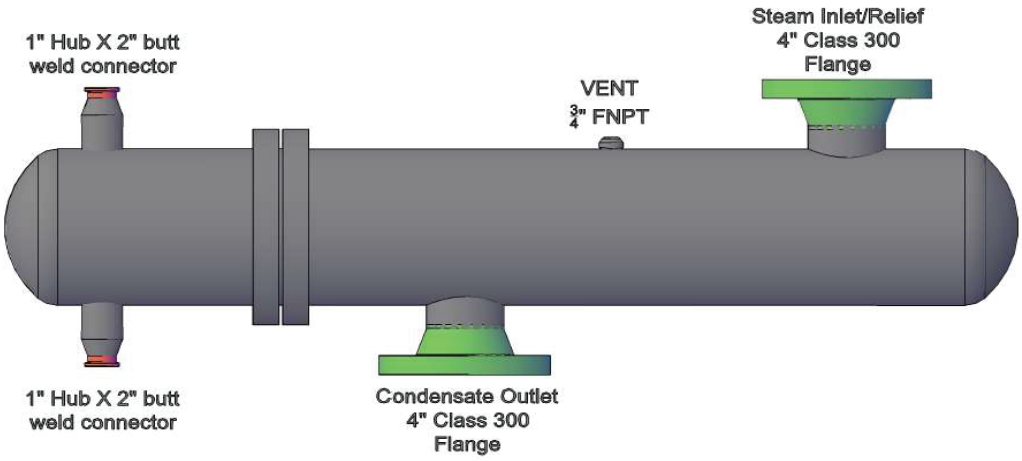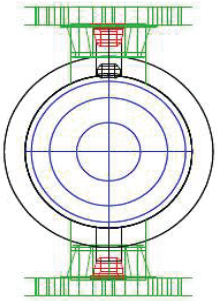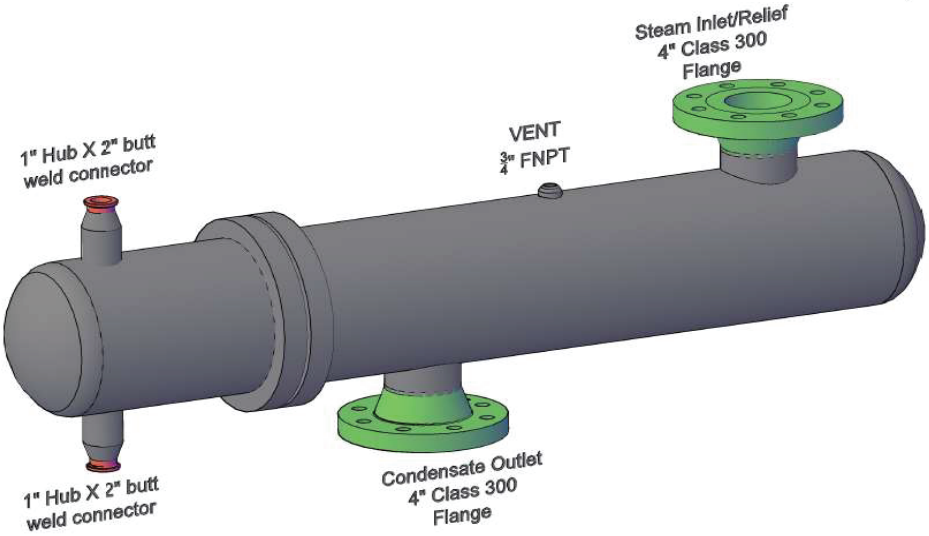
Concept of Heat Exchanger