MATERIALS LIST

REV	PIECE NO	QTY	UNIT	MFR #/NSN	DESCRIPTION	MATERIAL	BSI NO.
–	1	1	EA	"PIPE DREAMS MARINE"	FRAME AWNING AFT MAIN DECK CLEAR ANODIZED ALUMINUM	ALUMINUM	6233341
–	2	1	EA	"PIPE DREAMS MARINE"	FRAME AWNING AFT 01 DECK CLEAR ANODIZED ALUMINUM	ALUMINUM	6233351
–	3	1	EA	"PIPE DREAMS MARINE"	CANVAS SUN SHADE ROYAL BLUE COLOR CODE #464 AFT MAIN DECK	SUNBRELLA OR EQUAL	6233074
–	4	1	EA	"PIPE DREAMS MARINE"	CANVAS SUN SHADE ROYAL BLUE COLOR CODE #464 AFT 01 DECK	SUNBRELLA OR EQUAL	6233082
–	5	12	EA	"PIPE DREAMS MARINE"	COVER FITTED FLOODLIGHT	SUNBRELLA OR EQUAL	6238475
–	6	2	EA	"PIPE DREAMS MARINE"	COVER FITTED SPOTLIGHT ENSIGN	SUNBRELLA OR EQUAL	6238483
–	7	3	EA	"PIPE DREAMS MARINE"	COVER FITTED SEARCHLIGHT	SUNBRELLA OR EQUAL	6238491
–	8	1	EA	"PIPE DREAMS MARINE"	COVER FITTED BOAT WINCH MOTOR	SUNBRELLA OR EQUAL	6238505
–	9	1	EA	"PIPE DREAMS MARINE"	COVER FITTED BOAT WINCH CONTROLS	SUNBRELLA OR EQUAL	6238513
B	10	1	EA	"PIPE DREAMS MARINE"	COVER FITTED AFT PUMP P-100	SUNBRELLA OR EQUAL	6238521
–	11	2	EA	"PIPE DREAMS MARINE"	COVER FITTED PUMP P-6	SUNBRELLA OR EQUAL	6238823
–	12	3	EA	"PIPE DREAMS MARINE"	COVER FITTED CAPSTAN	SUNBRELLA OR EQUAL	5070520
–	13	3	EA	"PIPE DREAMS MARINE"	COVER FITTED CAPSTAN CONTROL	SUNBRELLA OR EQUAL	5070525
–	14	7	EA	"NEW ENGLAND ROPE"	ROPE NYLON 1/4"x 50FT URETHANE COATED PARALLEL CORED OF POLYESTER FIBER CONTAINED WITHIN A HELICALLY WRAPPED POLYESTER TAPE AND COVERED BY A WHITE AND BLUE FLECKED BRAIDED JACKET OF BOTH SPUN AND FILAMENT POLYESTER.	POLYESTER	6236049
–	15	9	EA	"RONSTAN"#RF45110	PULLEY BLOCK 3/8" ROPE SINGLE SWIVEL SHACKLE HEAD SERIES 40 BB MFG#RF45110 "RONSTAN" BSI#6233228	COMPOSITE/SS	6233228
C	16	7	EA	"WHITECAP INDUSTRIES"	SNAP HOOK 1/2" EYE ID X 2-7/8" LONG SWIVEL EYE NICKEL-PLATED BRASS-MFG#S-1128 "WHITECAP INDUSTRIES" BSI# 6119591	NICKEL-PLATED BRASS	6119591
C	17	7	EA	"SUNCOR"	RING ROUND 1-1/4"ID X 1-5/8"OD X 3/16" DIA, S/S-316 MFG#C0139-0530-W "SUNCOR" BSI# 6119611	316 STAINLESS STEEL	6119611
–	18	4	EA	"CREATIVE MOTIVES"	CURTAIN BLACKOUT 30" X 12" OVAL SHAPED INCLUDING VELCRO STRIPS	VINYL	6240186
–	19	2	EA	"CREATIVE MOTIVES"	CURTAIN BLACKOUT 18-1/2" X 18-1/2" INCLUDING VELCRO STRIPS	VINYL	6240151
–	20	2	EA	"CREATIVE MOTIVES"	CURTAIN BLACKOUT 12" X 12" INCLUDING VELCRO STRIPS	VINYL	6229980
–	21	1	EA	"LSC" #408	#408 LITTER COVER RS406 INTL ORANGE	VINYL COATED NYLON	6240852
–	22	2	EA	"DONOVAN MARINE"	STRAP LIFE-RAFT LASHING W/SLIDER & 3 D-RINGS	POLYESTER/SS-316	6240471
–	23	2	EA	GFE "HAMMAR" H-20	HYDROSTATIC RELEASE UNIT FOR LIFERAFTS	VARIOUS	GFE
–	24	2	EA	"SUNCOR"	SHACKLE LONG-D 5/16" X 2-5/16" SCREW PIN S/S-316 MFG#S0138-0008 "BOSUN"	SS-316	6205372
–	25	4	EA	"SUNCOR"	SHACKLE 1/4" ANCHOR TYPE SCREW PIN	SS-316	5571800
–	26	2	EA	"SUNCOR"S0170.0002	SHACKLE SWIVEL SNAP 3/4" W/YOKE 3-1/2" OAL	SS-316	6237614
–	27	2	EA	"SUNCOR"	TURNBUCKLE 5/16" X 4-1/8" CLOSED BODY TOGGLE END/TOGGLE END	SS-316	6045332
–	28	2	EA	"ACE" MFG#72249	HANDLE STARTER W/88" NYLON ROPE	VARIOUS	5167095
–	29	7	EA	"DAVEY"1634/BR/156	PIN BELAYING 3/8" DIA X 6-1/4"LG 3-3/4"STEM	BRASS	6239021
–	30	1	EA	"MARITIME WOOD"	RAIL BELAYING PIN 2" X 24" 4 HOLE	TEAK	6239013
–	31	1	EA	"MARITIME WOOD"	RAIL BELAYING PIN 2" X 18" 3 HOLE	TEAK	6239005
C	32	2	EA	"MCMASTER CARR"	STRAP S/S RATCHET 1" X 8' MAX LENGTH BLACK NYLON WEBBING W/STAINLESS STEEL WIRE HOOKS 400# WLL MFG#3102ST829	NYLON	6251153
B	33	1	EA	"PIPE DREAMS MARINE"	COVER FITTED FWD PUMP P-100	SUNBRELLA OR EQUAL	6241948

LIST OF COVERS PROVIDED WITH EQUIPMENT

REV	PIECE NO	QTY	UNIT	MFR #/NSN	DESCRIPTION	MATERIAL
2	SUPPLIED	4	EA	GFE	COVER FITTED .50 CAL GUN	SUNBRELLA OR EQUAL
2	SUPPLIED	1	EA		COVER FITTED CUTTER BOAT	SUNBRELLA OR EQUAL
2	SUPPLIED	1	EA		COVER FITTED CUTTER BOAT CONSOLE	SUNBRELLA OR EQUAL

GENERAL NOTES

1. COVERS SHALL BE PROVIDED FOR ITEMS EXPOSED TO THE WEATHER SUCH AS SEARCHLIGHTS, ANCHOR WINDLASS AND CONTROL STATION, STOKES LITTER, CUTTER BOAT RECOVERY WINCH, AND OTHER DECK MACHINERY. AN ALL AROUND COVER AND A CONSOLE COVER SHALL BE PROVIDED FOR THE CUTTER BOAT. A COVER SHALL BE PROVIDED FOR THE DROP PUMPS TO MINIMIZE EXPOSURE TO THE ELEMENTS. A COVER SHALL BE PROVIDED FOR THE P-100 PUMP ENCLOSURES TO MINIMIZE SALT WATER INTRUSION.

2. MATERIAL FOR COVERS SHALL BE 100% SATURATION SOLUTION-DYED ACRYLIC OR DACRON WITH A POLYURETHANE UNDERCOATING MEETING AT LEAST THE MINIMUM CHARACTERISTICS OF FLAME RETARDANT PROPERTIES, BREAKING STRENGTH, TEAR RESISTANCE, HYDROSTATIC RESISTANCE, AND UV RESISTANCE POSSESSED BY SUNBRELLA® PLUS MARINE FABRIC. ALL STITCHING SHALL BE WATERPROOFED.

3. COVERS SHALL BE SUNBRELLA® OCEAN BLUE, #4679, OR EQUAL IN COLOR.

4. COVERS SHALL HAVE STENCILED MARKINGS TO INDICATE ITS USE AND LOCATION. ALL COVERS SHALL FIT NEATLY WITHOUT WRINKLES OR POCKETS AND SHALL BE FITTED WITH ACCESSORIES AS NECESSARY FOR A COMPLETE INSTALLATION.

5. ALL DIMENSIONS ARE IN MILLIMETERS UNLESS OTHERWISE NOTED.

REVISIONS

REV	SHT	ZONE	ITEM	DESCRIPTION	DATE	INITIALS & ORG
A	3	GEN	1	REVISED LOCATION OF GANGWAY STORAGE.	12/7/12	GH /S/
B	1	8-G	1	REVISED QUANTITY FOR ITEM 10.	4/24/13	GH /S/
		8-E	2	ADDED ITEMS 32 & 33.		
	3	18-D		REVISED ITEMS FOR FWD P-100 PUMP COVERS.		
				THIS REVISION CLOSES FRC-ECN1644A.		
C	1	8-E	1	REVISED ITEM 32 DESCRIPTION.	7/14/14	GH /S/
		8-F	2	REVISED ITEM 16 & 17 FROM 9 TO 7.		
	2	13-F	1	REMOVED HALYARD ANCHOR CALL OUT FROM INTAKE TRUNK.		
		13-B, 13-E	2	REVISED SECTION ARROWS IN PLAN VEIWS TO SHOW ENTIRE PROFILE AND CORRECT CALL OUT FROM 14-A TO 29-A.		
	3	22-D	1	ADDED CALL OUT 21 FOR LITTER COVER.	7/25/14	GH /S/
	4	29-D	1	REVISED ITEM 27, 28 & 29 AND ADDED ITEM 30 & 31.		
		29-G				
		25-F	2	REVISED SECTION ARROW IN PLAN 29-F TO SHOW ENTIRE PROFILE.		
	5	34-D	1	REVISED ITEM 27, 28 & 29 AND ADDED ITEM 30 & 31.		JP HICKEY /S/
				THIS REVISION CLOSES FRC-ECN1689.		

NO	TITLE	DRAWING NO	REV
2	LIFE SAVING EQUIPMENT A&D	154-WPC-610-201	
1	GENERAL ARRANGEMENT	154-WPC-601-302	

REFERENCE PLANS

SPECIAL NOTATIONS

LIMITED RIGHTS NOTICE

A) THESE DATA ARE SUBMITTED WITH LIMITED RIGHTS UNDER GOVERNMENT CONTRACT NUMBER HSCG23-08-C-2FR125. THESE DATA MAY BE REPRODUCED AND USED BY THE GOVERNMENT WITH THE EXPRESS LIMITATION THAT THEY WILL NOT, WITHOUT WRITTEN PERMISSION OF BOLLINGER SHIPYARDS, INC., BE USED FOR PURPOSES OF MANUFACTURE NOR DISCLOSED OUTSIDE THE GOVERNMENT; EXCEPT THAT THE GOVERNMENT MAY DISCLOSE THESE DATA OUTSIDE THE GOVERNMENT FOR THE FOLLOWING PURPOSES, PROVIDED THAT THE GOVERNMENT MAKES SUCH DISCLOSURE SUBJECT TO PROHIBITION AGAINST FURTHER USE AND DISCLOSURE:
THE GOVERNMENT IS AUTHORIZED TO USE THE DATA FURNISHED FOR PURPOSES OF OPERATION, REPAIR, MAINTENANCE, AND OVERHAUL OF FAST RESPONSE CUTTER.
(B) THIS NOTICE SHALL BE MARKED ON ANY REPRODUCTION OF THESE DATA IN WHOLE OR IN PART.

BOLLINGER SHIPYARDS LOCKPORT, L.L.C
8365 HWY 308 SOUTH
LOCKPORT, LA 70374
PHONE: (985) 532-2554
CONTRACT/PO NO.
HSCG23-08-C-2FR125

DESIGNED:
DRAWN:
CHECKED:
APPROVED: GH /S/ 10/18/12
U.S.C.G. APPROVAL 12/4/12
JP HICKEY/S/
CDR USCG

UNITED STATES COAST GUARD WASHINGTON, D.C. 20593
OFFICE OF NAVAL ENGINEERING
154FT FAST RESPONSE CUTTER
RIGGING & COVERS A&D

SIZE	FSCM CAGE NO	U.S.C.G. DRAWING NO.	REV
H	81340	154-WPC-613-201	C
SCALE: NONE		10.42 SQ FT	SHEET 1 OF 5

SHT	REV
5	C
4	C
3	C
2	C
1	C

SHEET REV STATUS

154-WPC	ALL
PLAN-SET	HULLS

APPLICABILITY

DWG NO 154-WPC-613-201 REV C SH 1

PLOT DATE: Wednesday April 15 2015
PLOT TIME: 09:41:47am
PLOT ID: COATESCHE
FILE NAME: 154-WPC-613-201-1.DWG

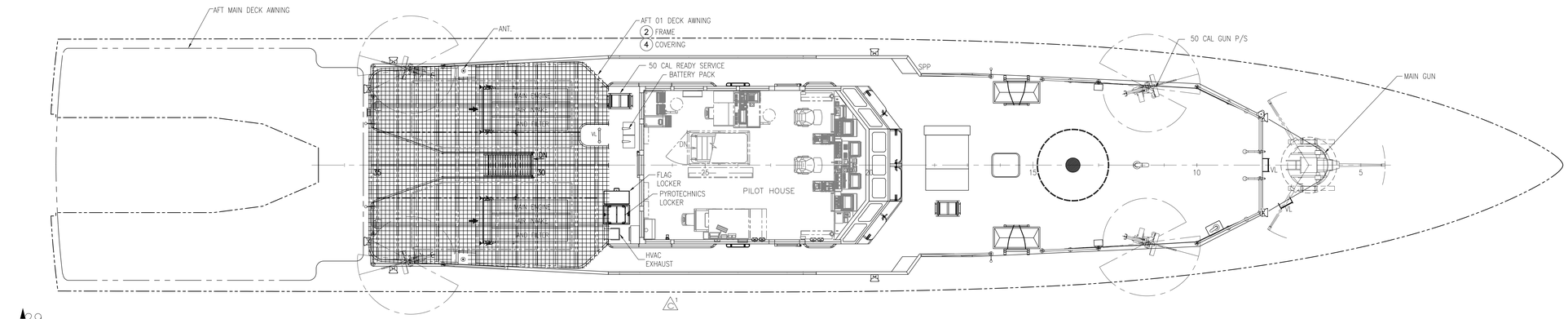

PLAN 13-E

SCALE: 1:50

01 DECK AMID AWNING

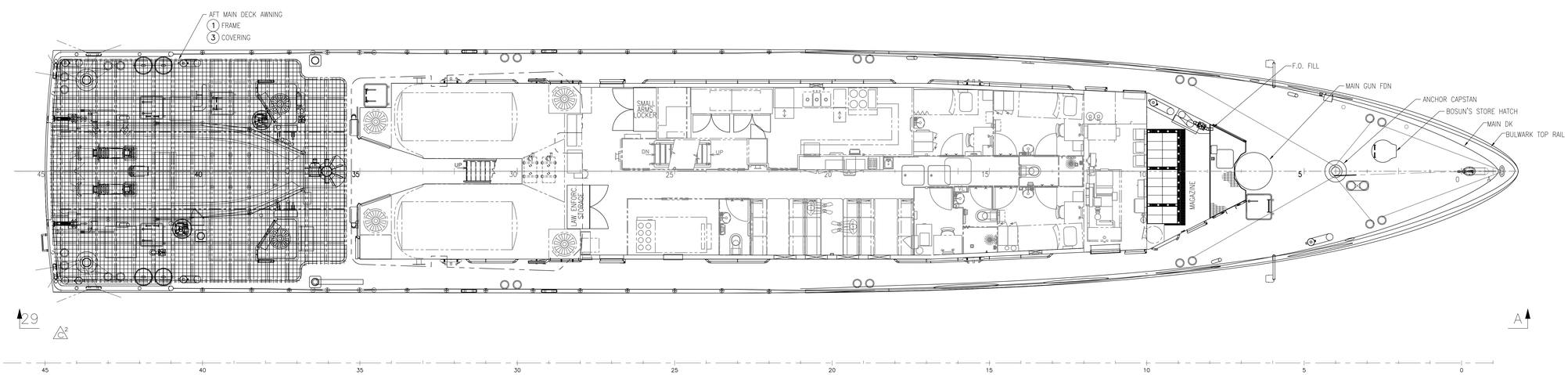

PLAN 13-B

SCALE: 1:50

MAIN DECK AMID AWNING

UNITED STATES COAST GUARD		WASHINGTON, D.C. 20593	
OFFICE OF NAVAL ENGINEERING			
154FT FAST RESPONSE CUTTER			
RIGGING & COVERS A&D			
SIZE	FSCM CAGE NO	U.S.C.G. DRAWING NO.	REV
H	81340	154-WPC-613-201	C
SCALE: AS NOTED		10.42 SQ FT	SHEET 2 OF

DWG NO 154-WPC-613-201 SH 2 REV C

PLOT DATE: Wednesday April 15 2015
PLOT TIME: 09:06:26 am
PLOT ID: CORTECCHE
FILE NAME: 154-WPC-613-201_LAYOUT_LAYOUT1.DWG

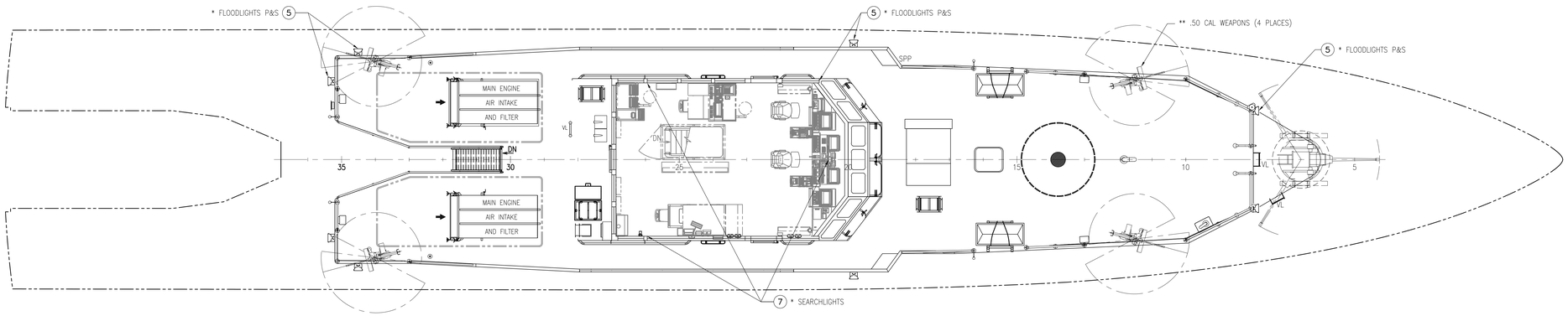

PLAN 21-E

SCALE: 1:50

01 DECK EQUIPMENT COVERS

NOTE:
ITEMS MARKED "*" TO BE FITTED WITH BLUE FABRIC COVERS. REFER TO GENERAL NOTES.
ITEMS MARKED "**" TO BE VENDOR SUPPLIED WITH FITTED COVERS.
ITEMS MARKED "***" TO BE FITTED WITH OPTIONAL COVERS FROM ITEM MANUFACTURER

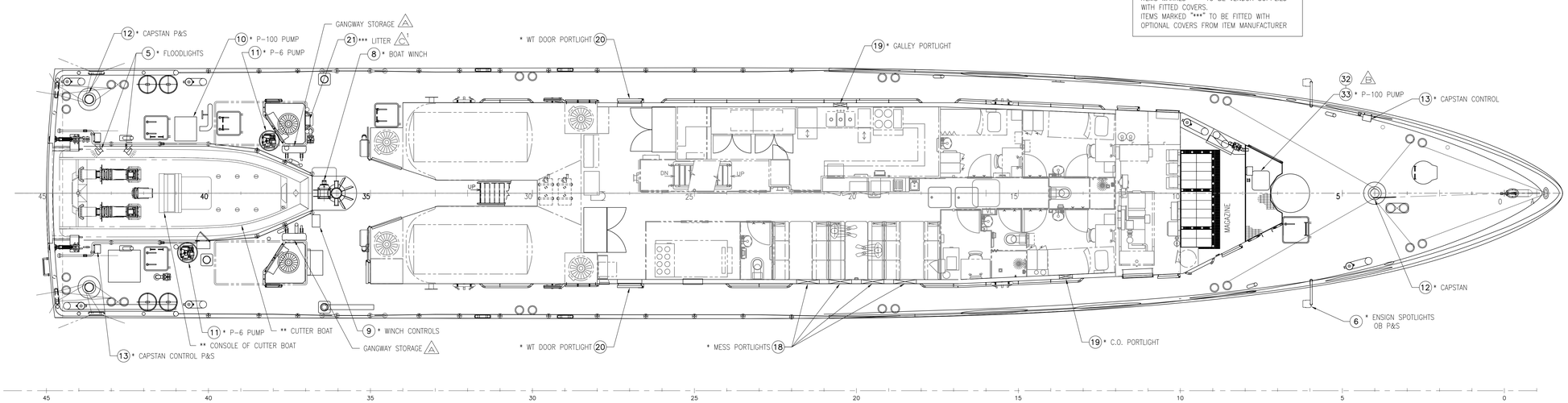

PLAN 21-B

SCALE: 1:50

MAIN DECK EQUIPMENT COVERS

UNITED STATES COAST GUARD WASHINGTON, D.C. 20593

OFFICE OF NAVAL ENGINEERING

154FT FAST RESPONSE CUTTER

RIGGING & COVERS A&D

SIZE	FSCM CAGE NO	U.S.C.G. DRAWING NO.	REV
H	81340	154-WPC-613-201	C
SCALE: AS NOTED		10.42 SQ FT	SHEET 3 OF

DWG NO 154-WPC-613-201 SH 3 REV C

DWG NO 154-WPC-613-301 SH 3 REV C

PLOT DATE: Wednesday April 15 2015
DGN TYPE: MODEL
PLOT TIME: 08:25:23pm
PLOT ID: CONTCOM
FILE NAME: C:\USERS\LUNTCHAS\DESKTOP\154-WPC-613-201_CONTCOM.DWG

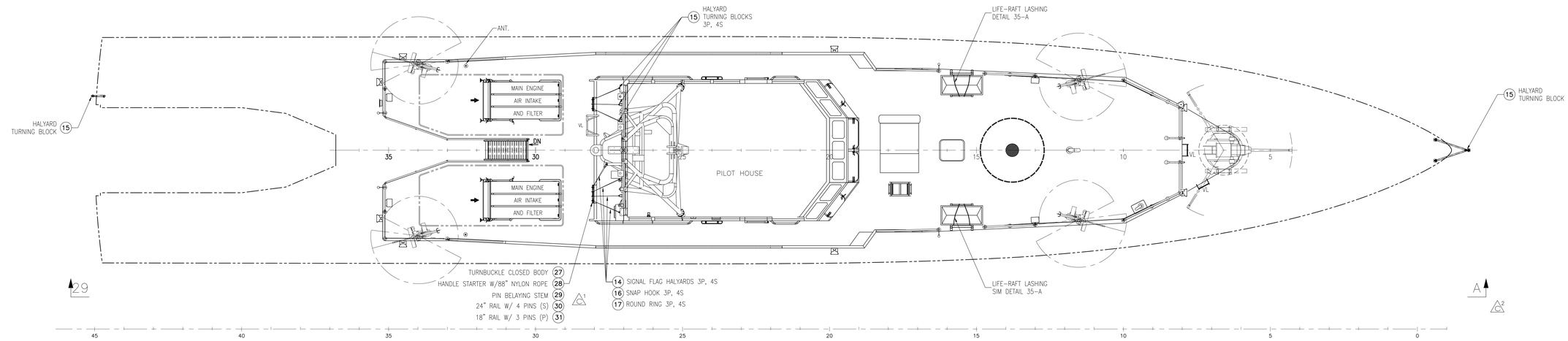

PLAN 29-F

SCALE: 1:50
01 DECK RIGGING

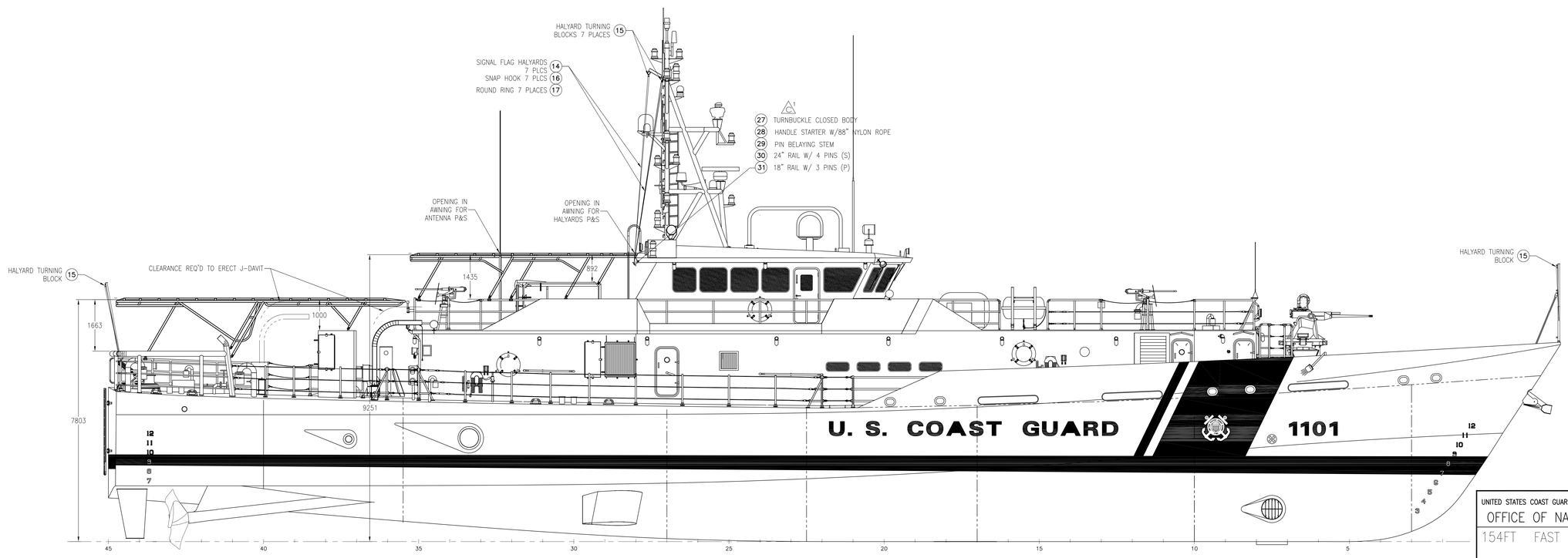

STBD PROFILE 29-A

SCALE: 1:50
RIGGING ELEVATION

UNITED STATES COAST GUARD WASHINGTON, D.C. 20593

OFFICE OF NAVAL ENGINEERING

154FT FAST RESPONSE CUTTER

RIGGING & COVERS A&D

SIZE	FSCM CAGE NO	U.S.C.G. DRAWING NO.	REV
H	81340	154-WPC-613-201	C
SCALE: AS NOTED		10.42 SQ FT	SHEET 4 OF

DWG NO 154-WPC-613-201 SH 4 REV C

PLOT DATE: Wednesday April 15 2015
PLOT TIME: 09:00:01am
PLOT ID: CUSTCGUE
FILE NAME: J:\154FRC-STUDIES\DESIGN\154-WPC-613-201.DWG

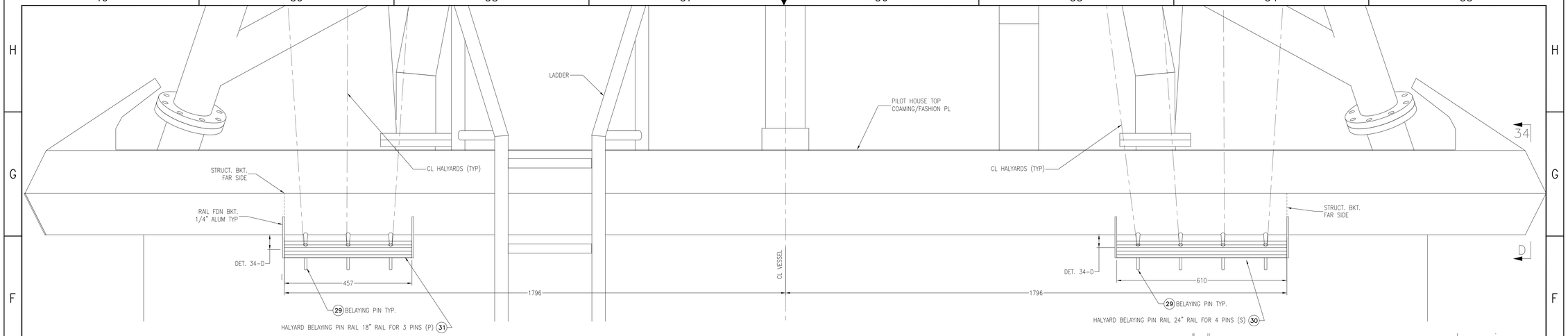

DETAIL 37-F
SCALE: 1:5
BELAYING PIN RAIL MOUNTING
AFT COAMING OF PILOT HOUSE TOP
LOOKING FWD

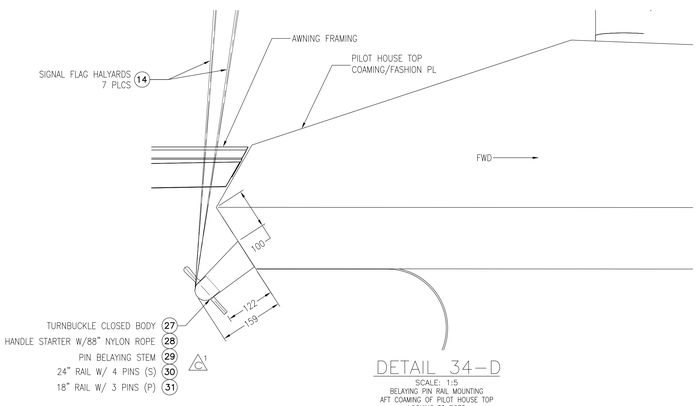

DETAIL 34-D
SCALE: 1:5
BELAYING PIN RAIL MOUNTING
AFT COAMING OF PILOT HOUSE TOP
LOOKING TO PORT

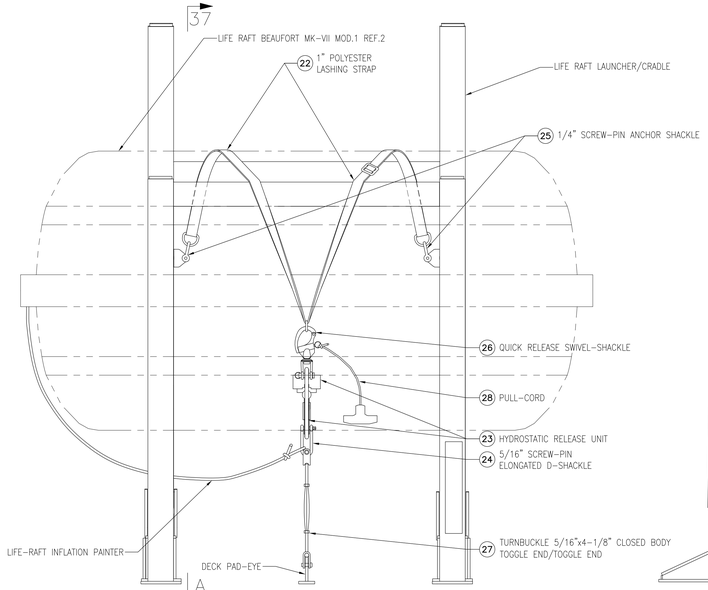

DETAIL 39-A
SCALE: 1:5
25-MAN LIFE-RAFT RIGGING
SIDE VIEW

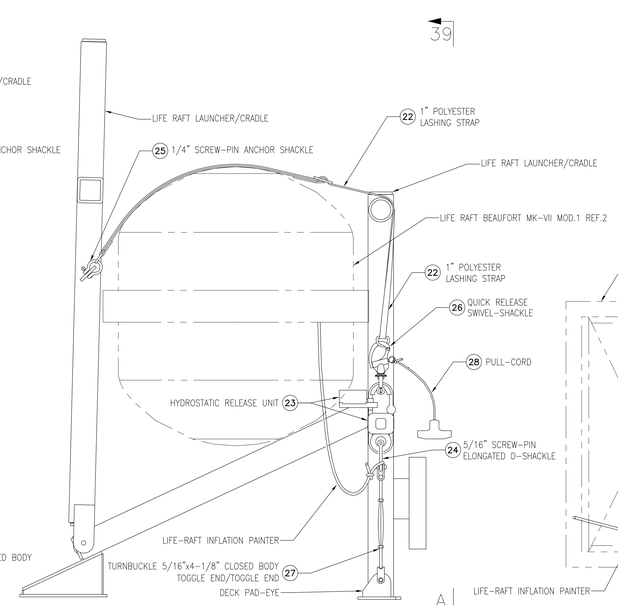

SECTION 37-A
SCALE: 1:5
25-MAN LIFE-RAFT RIGGING

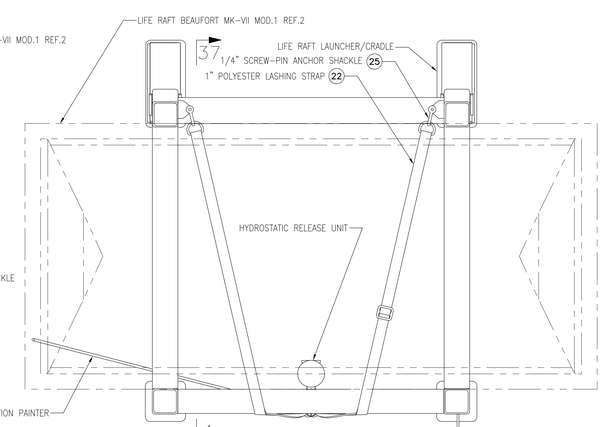

DETAIL 35-A
SCALE: 1:5
25-MAN LIFE-RAFT RIGGING
PLAN VIEW

UNITED STATES COAST GUARD	WASHINGTON, D.C. 20593
OFFICE OF NAVAL ENGINEERING	
154FT FAST RESPONSE CUTTER	
RIGGING & COVERS A&D	

SIZE	FSCM CAGE NO	U.S.C.G. DRAWING NO.	REV
H	81340	154-WPC-613-201	C
SCALE: AS NOTED		10.42 SQ FT	SHEET 5 OF

DWG NO 154-WPC-613-201 SH 2 REV C

PLOT DATE: Wednesday April 15 2015
DGN FILE: 154-WPC-613-201.DGN
PLOT ID:
PLOT SCALE: 1.0000
FILE NAME: C:\USERS\JOSHUA.LUCKNER\DOCUMENTS\154-WPC-613-201_LUCKNER.DGN