REPLACE CHILLERS & COOLING TOWER
BUILDING 4225

MARINE CORPS AIR STATION
CHERRY POINT, NORTH CAROLINA

CONSTRUCTION CONTRACT NO.
WORK ORDER NO. 7440851

LOCATION MAP

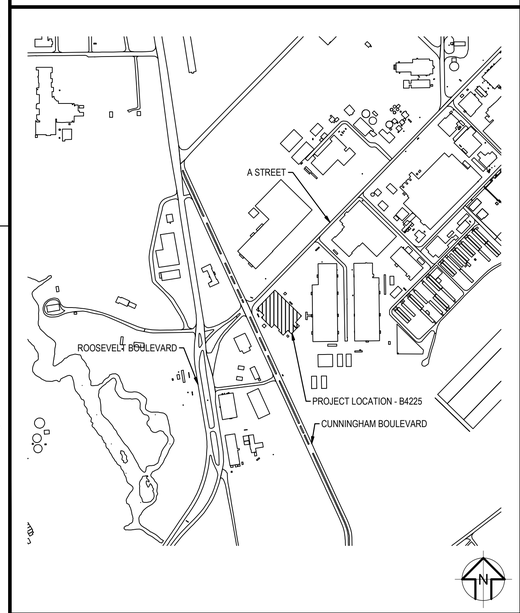

VICINITY MAP

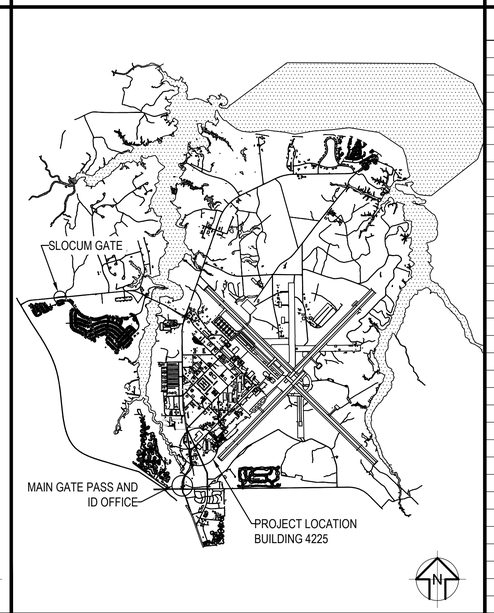

DRAWING INDEX

SHEET NUMBER	SHEET TITLE	NAVFAC DWG NO.	SHEET NUMBER	SHEET TITLE	NAVFAC DWG NO.
G-001	COVER SHEET	12939345	E-101	OVERALL PLAN	12939374
-	-	-	E-401	MECHANICAL ROOM PLAN	12939375
CD201	CIVIL DEMOLITION PLAN	12939346	E-402	ELECTRICAL ROOM PLAN	12939376
CS301	CIVIL SITE PLAN	12939347	E-403	MECHANICAL YARD PLAN	12939377
-	-	-	E-601	SCHEDULES	12939378
S-001	STRUCTURAL NOTES	12939348	E-602	PANEL SCHEDULES	12939379
S-002	STRUCTURAL NOTES	12939349	E-603	PANEL SCHEDULES	12939380
S-100	FOUNDATION DEMO PLAN	12939350	E-604	PANEL SCHEDULES	12939381
S-101	FOUNDATION PLAN	12939351	E-605	PANEL SCHEDULES	12939382
S-102	FRAMING PLAN	12939352	E-606	PARTIAL POWER RISER DIAGRAM	12939383
-	-	-	-	-	-
M-001	SYMBOLS & ABBREVIATIONS	12939353	-	-	-
M-002	PHASING PLAN	12939354	-	-	-
MD101	OVERALL PLAN - DEMOLITION	12939355	-	-	-
MD102	CONTROL VALVE PLAN - DEMOLITION	12939356	-	-	-
MD401	MECHANICAL ROOM PLAN - DEMOLITION	12939357	-	-	-
MD402	YARD PLAN - DEMOLITION	12939358	-	-	-
M-101	OVERALL PLAN	12939359	-	-	-
M-102	CONTROL VALVE PLAN	12939360	-	-	-
M-401	MECHANICAL ROOM PLAN	12939361	-	-	-
M-402	YARD PLAN	12939362	-	-	-
M-403	ROOF PLAN	12939363	-	-	-
M-501	DETAILS	12939364	-	-	-
M-601	SCHEDULES	12939365	-	-	-
M-701	CONTROLS COVER	12939366	-	-	-
M-702	CONTROLS	12939367	-	-	-
M-703	CONTROLS	12939368	-	-	-
-	-	-	-	-	-
E-001	SYMBOLS AND ABBREVIATIONS	12939369	-	-	-
ED101	OVERALL PLAN - DEMOLITION	12939370	-	-	-
ED401	MECHANICAL ROOM PLAN - DEMOLITION	12939371	-	-	-
ED402	ELECTRICAL ROOM PLAN - DEMOLITION	12939372	-	-	-
ED403	MECHANICAL YARD PLAN - DEMOLITION	12939373	-	-	-

HAZMAT SUMMARY

NO ASBESTOS CONTAINING MATERIALS HAVE BEEN IDENTIFIED IN THE CHILLER PLANT AREA

NO LEAD BASED PAINT WITH LEAD GREATER THAN OR EQUAL TO 1.0 MG/CM2 HAVE BEEN IDENTIFIED IN THE CHILLER PLANT AREA.

PAINT MUST BE CONSIDERED LEAD CONTAINING AT CONCENTRATIONS LESS THAN 1.0 MG/CM2.

PERFORM WORK IN ACCORDANCE WITH SPECIFICATIONS, OSHA STANDARDS AND GUIDELINES, INCLUDING 29 CFR 1926.62, LEAD EXPOSURE IN CONSTRUCTION STANDARDS.

SYM	DESCRIPTION	DATE	APPR

NAVFAC

NORTH CAROLINA PROFESSIONAL SEAL 039797 ENGINEER ROBERT A. POINTER
05/04/2026

SUMMER CONSULTANTS INCORPORATED
4325 Lake Boone Trail|Suite 301|Raleigh, NC 27607
(984) 204-4500 | www.summerconsultants.com

FOR COMMANDER NAVFAC
SIGNATURE: PERRY.HEATHER.MELYNN.1388599614 Digitally signed by PERRY.HEATHER.MELYNN.1388599614 Date: 2026.05.19 13:38:55 -04'00'

DES	ZAC	DRW	ZAC	CHK	WAN

<<PM/DM>> NICHOLAS A. HALL
BRANCH MANAGER PATRICK FAULKNER
CHIEF ENG/ARCH
<<XXX>>

DEPARTMENT OF THE NAVY
NAVAL FACILITIES ENGINEERING SYSTEMS COMMAND - MID-ATLANTIC
FACILITIES ENGINEERING & ACQUISITIONS DIVISION

NAVAL FACILITIES ENGINEERING SYSTEMS COMMAND
MCAS CHERRY POINT - CHERRY POINT, NC

MCAS CHERRY POINT, NC
REPLACE CHILLERS & COOLING TOWER
BUILDING 4225

CHERRY POINT, NC

COVER SHEET

SCALE: AS NOTED
EPROJECT NO.: 7440851
CONSTR. CONTR. NO.
NAVFAC DRAWING NO.
12939345
SHEET 1 OF 39
G-001

FILE NAME: 231.007 G-001.DWG
OUR REF: 231.007
PLOT DATE: 4/30/2026 2:23:55 PM

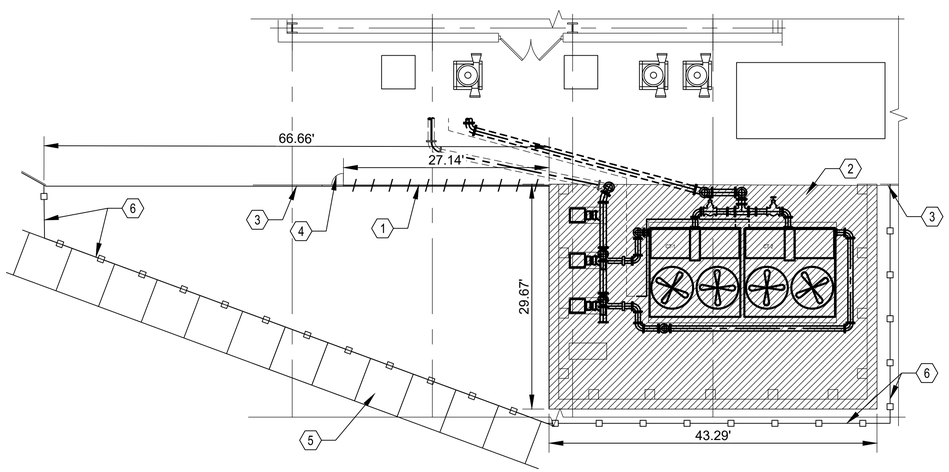

A1 CIVIL DEMOLITION PLAN
SCALE: 1" = 10'

0 5' 10' 20' 30'

PLAN NORTH

GENERAL SHEET NOTES

1. THIS SHEET IS PART OF A MULTI-SHEET SET OF CONSTRUCTION PLANS AND MUST BE READ WITH THE FULL SET TO BEST ENSURE PROPER INTERPRETATION.
2. ANY WORK/CUTOVERS/INTERRUPTIONS ON EXISTING UTILITIES MUST BE SCHEDULED THROUGH THE BASE AT LEAST 14 DAYS IN ADVANCE.
3. BACKGROUND INFORMATION HAS BEEN PROVIDED BY SUMMER CONSULTANTS. NO SURVEY HAS BEEN PERFORMED. CONTRACTOR MUST VERIFY ALL EXISTING CONDITIONS PRIOR TO DEMOLITION AND CONSTRUCTION.

SHEET KEYNOTES

1. DEMO THIS PART OF EXISTING CHAIN-LINK FENCE.
2. DEMO MECHANICAL EQUIPMENTS AND CONCRETE INSIDE THIS AREA - REFER TO MECHANICAL DRAWINGS SHEET (MD402) AND STRUCTURAL DRAWINGS SHEET (S-100).
3. EXISTING CHAIN-LINK FENCE TO REMAIN.
4. EXISTING GATE TO REMAIN.
5. EXISTING SIDEWALK.
6. TEMPORARY CONSTRUCTION FENCE - SEE DETAIL (D1), SHEET (CD201)

LEGEND:

DEMOLITION AREA

ITEM DEMOLITION

TEMPORARY CONSTRUCTION FENCE

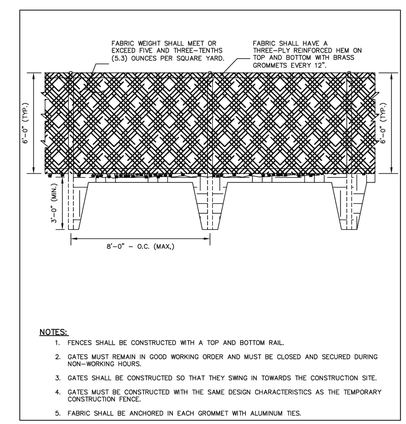

NOTES:

1. FENCES SHALL BE CONSTRUCTED WITH A TOP AND BOTTOM RAIL.
2. GATES MUST REMAIN IN GOOD WORKING ORDER AND MUST BE CLOSED AND SECURED DURING NON-WORKING HOURS.
3. GATES SHALL BE CONSTRUCTED SO THAT THEY SWING IN TOWARDS THE CONSTRUCTION SITE.
4. GATES MUST BE CONSTRUCTED WITH THE SAME DESIGN CHARACTERISTICS AS THE TEMPORARY CONSTRUCTION FENCE.
5. FABRIC SHALL BE ANCHORED IN EACH GROMMET WITH ALUMINUM TIES.

D1 TEMPORARY CONSTRUCTION FENCE DETAIL
NTS

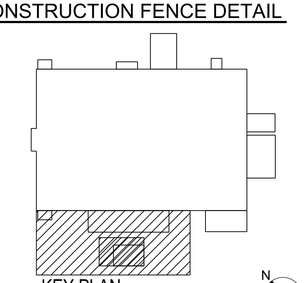

KEY PLAN
N.T.S.

RAYMOND 1035 GREEN ST. SUITE A CONYERS, GA 30012

SYM	DESCRIPTION	DATE	APPR

NAVFAC

NORTH CAROLINA PROFESSIONAL SEAL 034234 ENGINEER CLAY DANIELL REICHERT

SUMMER CONSULTANTS INCORPORATED
4325 Lake Boone Trail | Suite 301 | Raleigh, NC 27607
(984) 204-4500 | www.summerconsultants.com

FOR COMMANDER NAVFAC
ACTIVITY
SATISFACTORY TO DATE

DES WE	DRW WE	CHK CR

<<PM/DM>> NICHOLAS A. HALL
BRANCH MANAGER PATRICK FAULKNER
CHIEF ENG/ARCH
<<XXX>>

DEPARTMENT OF THE NAVY
NAVAL FACILITIES ENGINEERING SYSTEMS COMMAND
FACILITIES ENGINEERING & ACQUISITIONS DIVISION

NAVAL FACILITIES ENGINEERING SYSTEMS COMMAND - MID-ATLANTIC
MCAS CHERRY POINT - CHERRY POINT, NC

MCAS CHERRY POINT, NC
CHERRY POINT, NC
REPLACE CHILLERS & COOLING TOWER
BUILDING 4225

CIVIL DEMOLITION PLAN

SCALE: AS NOTED
EPROJECT NO.: 7440851
CONSTR. CONTR. NO.
NAVFAC DRAWING NO. 12939346
SHEET 2 OF 39
CD201

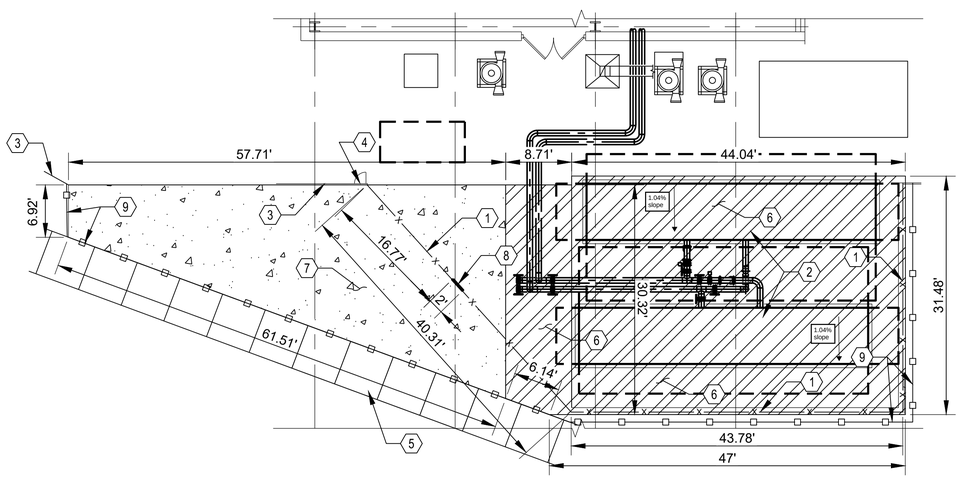

A1 CIVIL SITE PLAN
SCALE: 1" = 10'

0 5' 10' 20' 30'

PLAN NORTH

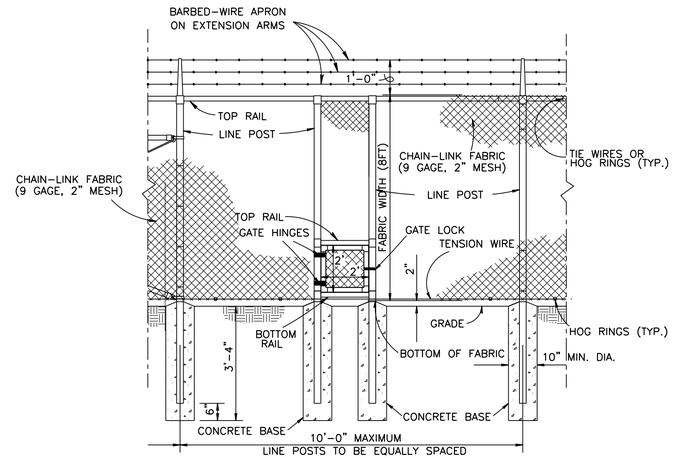

D2 2'x2' FENCE LOCKABLE ACCESS DOOR DETAIL
NTS

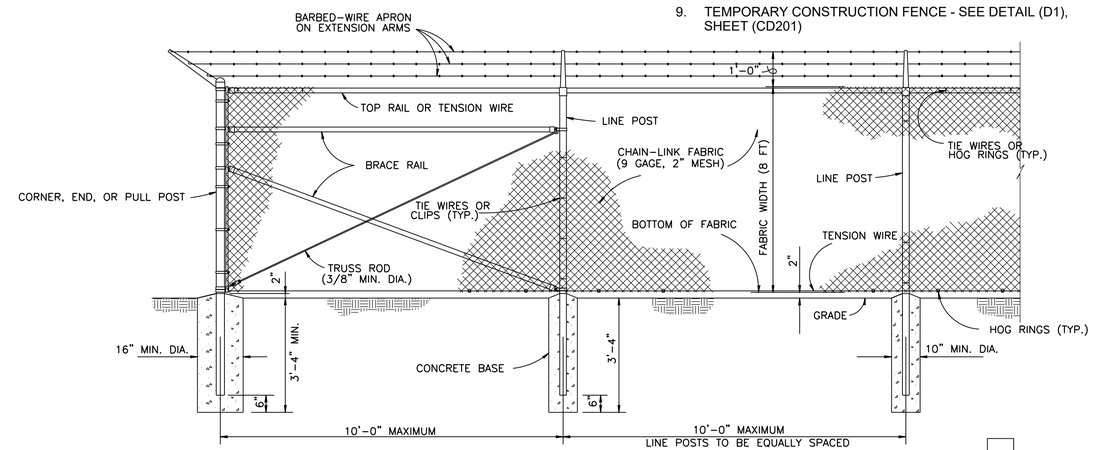

D3 8 FT CHAIN LINK SECURITY FENCE DETAIL
NTS

LEGEND:

- X — PROPOSED FENCE
- CONCRETE PAD
- PROPOSED CONCRETE PAD
- TEMPORARY CONSTRUCTION FENCE

GENERAL SHEET NOTES

1. THIS SHEET IS PART OF A MULTI-SHEET SET OF CONSTRUCTION PLANS AND MUST BE READ WITH THE FULL SET TO BEST ENSURE PROPER INTERPRETATION.
2. ANY WORK/CUTOVERS/INTERRUPTIONS ON EXISTING UTILITIES MUST BE SCHEDULED THROUGH THE BASE AT LEAST 14 DAYS IN ADVANCE.
3. BACKGROUND INFORMATION HAS BEEN PROVIDED BY SUMMER CONSULTANTS. NO SURVEY HAS BEEN PERFORMED. CONTRACTOR MUST VERIFY ALL EXISTING CONDITIONS PRIOR TO DEMOLITION AND CONSTRUCTION.
4. CONTRACTOR MUST PROVIDED FOR POSITIVE DRAINAGE AWAY FROM THE MECHANICAL EQUIPMENT PAD AND PREVENT ANY STANDING WATER.
5. CONCRETE MECHANICAL EQUIPMENT PAD MUST HAVE A 1.04% AWAY FROM THE BUILDING.
6. CONCRETE PAD MUST HAVE BETWEEN 5-6% AIR ENTRAINMENT.
7. CONCRETE PADS MUST HAVE BROOM FINISH.

SHEET KEYNOTES

1. PROPOSED 8 FT CHAIN-LINK SECURITY FENCE TO MATCH EXISTING FENCE (8 FT HEIGHT WITHOUT THE TOP BARBED-WIRE HEIGHT) - SEE DETAIL (D3), SHEET (CS301).
2. MECHANICAL EQUIPMENT INSIDE THIS AREA - REFER TO MECHANICAL DRAWINGS , SHEET (M-402)
3. EXISTING CHAIN-LINK FENCE.
4. EXISTING GATE.
5. EXISTING SIDEWALK.
6. PROVIDE CONCRETE PAD FLUSH TO GRADE - SEE STRUCTURAL DRAWINGS FOR MORE DETAILS.
7. AFTER TEMPORARY CHILLER HAS BEEN DE-MOBILIZED, EXTEND CONCRETE PAD FOR TEMPORARY CHILLER LAYDOWN AREA. PAD MUST FLUSH TO GRADE - SEE STRUCTURAL PLANS SHEET (S-101) FOR MORE DETAILS.
8. 2' x 2' LOCKABLE ACCESS DOOR - SEE DETAIL (D2), SHEET (CS301).
9. TEMPORARY CONSTRUCTION FENCE - SEE DETAIL (D1), SHEET (CD201)

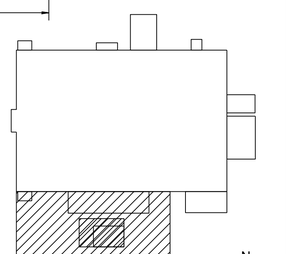

KEY PLAN
N.T.S.

N

RAYMOND 1035 GREEN ST. SUITE A CONYERS, GA 30012

SYM	DESCRIPTION	DATE	APPR

NAVFAC

NORTH CAROLINA PROFESSIONAL SEAL 034234 ENGINEER CLAY DANIELL REICHERT 4-25-24

SUMMER CONSULTANTS INCORPORATED
4325 Lake Boone Trail|Suite 301|Raleigh, NC 27607
(984) 204-4500 | www.summerconsultants.com

FOR COMMANDER NAVFAC
ACTIVITY
SATISFACTORY TO DATE
DES WE DRW WE CHK CR
<<PM/DM>> NICHOLAS A. HALL
BRANCH MANAGER PATRICK FAULKNER
CHIEF ENG/ARCH
<<XXX>>

DEPARTMENT OF THE NAVY
NAVAL FACILITIES ENGINEERING SYSTEMS COMMAND
FACILITIES ENGINEERING & ACQUISITIONS DIVISION
MCAS CHERRY POINT, NC

NAVAL FACILITIES ENGINEERING SYSTEMS COMMAND - MID-ATLANTIC
MCAS CHERRY POINT - CHERRY POINT, NC

REPLACE CHILLERS & COOLING TOWER BUILDING 4225

CHERRY POINT, NC

CIVIL SITE PLAN

SCALE: AS NOTED
EPROJECT NO.: 7440851
CONSTR. CONTR. NO.
NAVFAC DRAWING NO. 12939347
SHEET 3 OF 39
CS301

GENERAL STRUCTURAL NOTES:

1. THE CONTRACTOR MUST REVIEW ALL SUBMITTALS BEFORE THEY ARE PROVIDED TO THE CONTRACTING OFFICER. THE CONTRACTOR'S REVIEW MUST BE DOCUMENTED WITHIN THE SUBMITTAL. THE CONTRACTING OFFICER RESERVE THE RIGHT TO REJECT SUBMITTALS THAT HAVE NOT BEEN FIRST REVIEWED BY THE CONTRACTOR. THE ACCURACY AND COMPLETENESS OF THE SUBMITTALS IS THE SOLE RESPONSIBILITY OF THE CONTRACTOR, INCLUDING ALL ERRORS AND OMISSIONS. IN ADDITION, THE CONTRACTOR IS SOLELY RESPONSIBLE FOR ALL MEANS, METHODS, AND SEQUENCING OF CONSTRUCTION.

2. THE CONTRACTOR MUST BE EXPERIENCED AND QUALIFIED TO PERFORM THE TYPE OF CONSTRUCTION REQUIRED TO COMPLETE THE WORK PRESCRIBED BY THE CONTRACT DOCUMENTS. THE CONTRACT DOCUMENTS WERE PREPARED AS A COMPLETE SET OF PROJECT DRAWINGS AND SPECIFICATIONS. IT IS THE CONTRACTOR'S RESPONSIBILITY TO COORDINATE ALL INFORMATION PROVIDED IN THE ARCHITECTURAL, MECHANICAL, AND ELECTRICAL DRAWINGS AND SPECIFICATIONS. THE CONTRACTOR MUST NOTIFY THE CONTRACTING OFFICER IMMEDIATELY OF ANY CONFLICTS, OMISSIONS, OR DISCREPANCIES. THIS COORDINATION MUST BE PERFORMED BEFORE THE PROCUREMENT OF MATERIALS AND/OR FABRICATION OF ANY PROJECT COMPONENTS.

3. WHERE SECTION IS SHOWN AND DETAILED, OTHER SECTIONS OF SIMILAR CONDITION MUST BE DETAILED THE SAME OR OPPOSITE HAND, WHETHER SPECIFICALLY NOTED OR NOT.

4. CONTRACTOR MUST VERIFY EXISTING DIMENSIONS, ELEVATIONS, AND SITE CONDITIONS BEFORE BEGINNING CONSTRUCTION. NOTIFY ENGINEER OF RECORD OF ANY DISCREPANCIES.

5. COORDINATE SIZES AND LOCATIONS OF ALL FLOOR AND ROOF PENETRATIONS WITH PLUMBING, MECHANICAL, AND ARCHITECTURAL REQUIREMENTS.

6. CONTRACTING OFFICER'S APPROVAL MUST BE SECURED FOR ALL SUBSTITUTIONS. SUCH APPROVAL MAY ALSO BE WITHHELD AT THE SOLE DISCRETION OF THE CONTRACTING OFFICER.

7. THE STRUCTURES HAVE BEEN DESIGNED IN ACCORDANCE WITH THE PROVISIONS OF THE FOLLOWING:

   a. INTERNATIONAL BUILDING CODE, 2021 EDITION (IBC 2021).

   b. AMERICAN SOCIETY OF CIVIL ENGINEERS, "MINIMUM DESIGN LOADS FOR BUILDINGS AND OTHER STRUCTURES," 2022 EDITION (ASCE 7-22).

   c. UNIFIED FACILITIES CRITERIA (UFC) 3-301-01, "STRUCTURAL ENGINEERING," DATED 3 JUNE 2025

8. THE CONTRACTOR MUST PROVIDE TEMPORARY SHORING AND BRACING REQUIRED TO ERECT AND HOLD THE STRUCTURE IN PROPER ALIGNMENT UNTIL PERMANENT SUPPORTS AND LATERAL BRACING ARE IN PLACE.

9. DO NOT SCALE DRAWINGS, USE DIMENSIONS.

10. DESIGN LOADS USED IN THE DESIGN OF THE STRUCTURAL SYSTEMS IN THIS PROJECT ARE AS FOLLOWS:

a. RISK CATEGORY	II
b. LIVE LOAD:	
PIPE RACK LOAD	100 psf
c. ROOF SNOW LOAD:	
GROUND SNOW LOAD, p_g	31 psf
SNOW EXPOSURE FACTOR, C_e	0.9
IMPORTANCE FACTOR, I_s	1.0
THERMAL FACTOR, C_t	1.0
FLAT ROOF SNOW LOAD, p_f	26 psf
d. WIND DESIGN CRITERIA:	
EXPOSURE CATEGORY	B
BASIC WIND SPEED, V	137 mph (FACTORED, ULTIMATE LOAD)
e. SEISMIC DESIGN CRITERIA:	
SPECTRAL RESPONSE ACCELERATION:	
S_s (SHORT PERIOD (0.2 SECOND))	0.14 g
S_1 (LONG PERIOD (1.0 SECOND))	0.052 g
S_{DS} (SHORT PERIOD (0.2 SECOND))	0.12 g
S_{D1} (LONG PERIOD (1.0 SECOND))	0.074 g
SITE CLASS	CLASS D
SEISMIC DESIGN CATEGORY	B
LATERAL FORCE RESISTING SYSTEM	STEEL SYSTEM NOT SPECIFICALLY DEISGNED FOR SEISMIC RESISTANCE
IMPORTANCE FACTOR, I_e	1.0
RESPONSE MODIFICATION COEFFICIENT, R	3.0
SEISMIC RESPONSE COEFFICIENT, C_s	0.025
ANALYSIS PROCEDURE:	EQUIVALENT LATERAL FORCE
SEISMIC BASE SHEAR, V	130 LBS

11. ALL VERTICAL ELEVATIONS ARE BASED ON THE CONTROL ELEVATION FROM SURVEY BY OTHERS.

FOUNDATION

1. FOUNDATIONS FOR THIS STRUCTURE HAVE BEEN DESIGNED IN ACCORDANCE WITH PRESUMPTIVE LOAD BEARING VALUES PER THE INTERNATIONAL BUILDING CODE(IBC) TABLE 1806.2.

2. FOUNDATIONS AND EARTH RETAINING STRUCTURES HAVE BEEN DESIGNED FOR A MAXIMUM ALLOWABLE SOIL BEARING PRESSURE OF 1500 PSF.

3. PRIOR TO PLACING FOUNDATION CONCRETE, AND AFTER COMPACTION OF SUBGRADE, ALL FOUNDATION EXCAVATIONS MUST BE INSPECTED AND TESTED BY A QUALIFIED GEOTECHNICAL TECHNICIAN. TESTING MUST INCLUDE IN PLACE DENSITY TESTING, WHICH WILL REQUIRE ESTABLISHING THE OPTIMUM MOISTURE CONTENT OF THE SUBGRADE. IF THE SUBGRADE HAS LESS THAN THE STATED ALLOWABLE BEARING CAPACITY (NOTE 2 ABOVE) THE WEAK SUBGRADE MUST BE REMOVED, RECOMPACTED & RETESTED UNTIL IT IS SATISFACTORY AT NO ADDITIONAL COST TO THE OWNER. CONCRETE PLACEMENT MUST NOT PROCEED UNTIL THE SUBGRADE HAS BEEN COMPACTED TO A MINIMUM OF 98% MAX DRY DENSITY.

4. NO UNBALANCED BACKFILLING MUST BE DONE AGAINST CONCRETE OR MASONRY WALLS UNLESS WALLS ARE SECURELY BRACED AGAINST OVERTURNING, EITHER BY TEMPORARY CONSTRUCTION BRACING OR BY PERMANENT CONSTRUCTION.

ADHESIVE ANCHORS

1. ADHESIVE ANCHORS INTO CONCRETE OR SOLID GROUTED CMU MUST BE THREADED ANCHORS DRILLED AND GROUTED USING EPOXY OR ACRYLIC ADHESIVES BASED ON THE DIAMETER AND EMBEDMENT DEPTH SHOWN ON THE DESIGN DRAWINGS. ANY CONTRACTOR REQUEST FOR ALTERNATES MUST BE PRE-APPROVED IN WRITING BY THE CONTRACTING OFFICER.

2. ADHESIVE ANCHORS INTO HOLLOW CMU MUST BE THREADED ANCHORS DRILLED AND GROUTED USING EPOXY OR ACRYLIC. ADHESIVES BASED ON THE DIAMETER AND EMBEDMENT DEPTH SHWON ON THE DESIGN DRAWINGS. ANCHORS MUST USE A PLASTIC OR METALIC MESH SCREEN IN THE CMU VOIDS. ANY CONTRACTOR REQUEST FOR ALTERNATES MUST BE PRE-APPROVED IN WRITING BY THE CONTRACTING OFFICER.

3. ANCHORS MUST HAVE A MINIMUM Fy = 36 ksi.

4. ANCHOR INSTALLATION MUST BE IN STRICT CONFORMANCE WITH MANUFACTURER'S RECOMMENDATIONS.

STRUCTURAL STEEL

1. STRUCTURAL STEEL FOR THIS PROJECT HAS BEEN DESIGNED IN ACCORDANCE WITH THE FIFTEENTH EDITION OF THE AMERICAN INSTITUTE OF STEEL CONSTRUCTION (AISC) "STEEL CONSTRUCTION MANUAL", USING LOAD AND RESISTANCE FACTOR DESIGN(LRFD).

2. STRUCTURAL STEEL MUST COMPLY WITH THE FOLLOWING SPECIFICATIONS:

   a. STRUCTURAL STEEL WIDE FLANGE SHAPES - ASTM A992, Fy = 50 ksi
   b. OTHER STRUCTURAL STEEL SHAPES, PLATES, AND BARS - ASTM A36, Fy = 36 ksi
   c. COLD-FORMED STRUCTURAL STEEL TUBING - ASTM A500, GRADE B, Fy = 42 ksi
   d. STEEL PIPE - ASTM A53, GRADE B, TYPE E OR S, Fy = 35 ksi
   e. ANCHOR RODS - ASTM F1554, Fy = 36 ksi

3. WELDING MUST BE IN ACCORDANCE WITH THE AMERICAN WELDING SOCIETY(AWS) D.1, "STRUCTURAL WELDING CODE - STEEL", LATEST EDITION. WELD ELECTRODES MUST BE E70XX. PROVIDE 3/16" CONTINUOUS FILLET WELDS UNLESS NOTED OTHERWISE.

4. EXPOSED EXTERIOR METAL INCLUDING ALL EXTERIOR METAL FABRICATIONS MUST BE HOT DIPPED GALVANIZED.

5. UNLESS NOTED OTHERWISE, ALL BEAM SHEAR CONNECTIONS MUST BE MADE USING 3/4"∅ A325 BOLTS, BEARING TYPE WITH THREADS EXCLUDED. ALL GRAVITY ONLY BEAMS MUST HAVE SIMPLE SHEAR CONNECTIONS DESIGNED TO SUPPORT 1/2 THE TOTAL FACTORED UNIFORM LOAD FOR THE SUPPORTED BEAM, ITS SPAN, AND ITS GRADE OF STEEL AS SPECIFIED IN AISC LRFD.

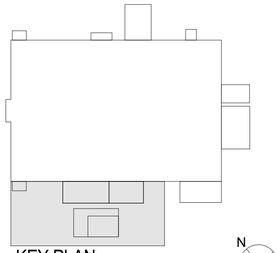

KEY PLAN
N.T.S.

N

SYM	DESCRIPTION	DATE	APPR.

NAVFAC

NORTH CAROLINA PROFESSIONAL SEAL 052546 ENGINEER RODNIQUA M. WINOR 5/14/26

SEAL

SUMMER CONSULTANTS INCORPORATED
4325 Lake Boone Trail|Suite 301|Raleigh, NC 27607
(984) 204-4500 | www.summerconsultants.com

FOR COMMANDER NAVFAC
ACTIVITY
SATISFACTORY TO DATE

DES RMM	DRW RMM	CHK JJS

<<PM/DM>> NICHOLAS A. HALL
BRANCH MANAGER PATRICK FAULKNER
CHIEF ENG/ARCH
<<XX>>

DEPARTMENT OF THE NAVY
NAVAL FACILITIES ENGINEERING SYSTEMS COMMAND
FACILITIES ENGINEERING & ACQUISITIONS DIVISION

NAVAL FACILITIES ENGINEERING SYSTEMS COMMAND - MID-ATLANTIC
MCAS CHERRY POINT - CHERRY POINT, NC

MCAS CHERRY POINT, NC
CHERRY POINT, NC

REPLACE CHILLERS & COOLING TOWER BUILDING 4225

STRUCTURAL NOTES

SCALE: AS NOTED
EPROJECT NO.: 7440851
CONSTR. CONTR. NO. NEVER INCLUDE
NAVFAC DRAWING NO. 12939348
SHEET 4 OF 39

S-001

File Path: X:\FY22\122006\04 CAD BIM\04.01 BIM
Plot Date: 4/29/2026 12:38:45 PM

CAST-IN-PLACE CONCRETE

1. CAST-IN-PLACE CONCRETE FOR THIS PROJECT MUST COMPLY WITH THE AMERICAN CONCRETE INSTITUTE (ACI) "BUILDING CODE REQUIREMENTS FOR REINFORCED CONCRETE AND COMMENTARY" ACI 318-19 AND ACI 318R-19.

2. REFERENCE PROJECT SPECIFICATION SECTION 03 30 00 "CAST-IN-PLACE CONCRETE".

3. CONCRETE MUST HAVE THE FOLLOWING PROPERTIES:

AREA	WEIGHT	STRENGTH @ 28 DAYS	AIR CONTENT	MAX. W/C RATIO	NOMINAL MAX. AGG. SIZE
FOUNDATIONS	145 pcf	3000 psi	5%	0.55	1"
PAVING	145 pcf	3000 psi	5%	N/A	3/4"

THE EXPOSURE CLASSES FOR THE CONCRETE AREAS ARE AS FOLLOWS:

AREA	FREEZING & THAWING (F)	SULFATES (S)	CONTACT W/ WATER (W)	CORROSION PROTECTION (C)
FOUNDATIONS	F1	S0	W1	C0

(SEE SPECIFICATION SECTION 03 30 00 FOR ADDITIONAL REQUIREMENTS)

4. AN INTENTIONALLY ROUGHENED SURFACE MAY BE USED INSTEAD OF A CONTINUOUS SHEAR KEY AT ALL HORIZONTAL CONSTRUCTION JOINTS.

5. ALL EXPOSED CONCRETE EDGES MUST HAVE 3/4" CHAMFER, WHETHER SPECIFICALLY NOTED OR NOT.

6. TYPICAL SLAB FINISH MUST BE BROOM FINISH FOR EXTERIOR SLABS AND STEEL TROWEL FINISH FOR INTERIOR SLABS.

7. ALL ANCHOR RODS MUST BE BLACK AS NOTED ON DESIGN DRAWINGS.

8. CONCRETE FORM WORK MUST COMPLY WITH ACI 347, LATEST EDITION. CONTRACTOR MUST BE RESPONSIBLE FOR THE DESIGN OF ALL FORMWORK.

9. DURING AND IMMEDIATELY AFTER PLACING, CONCRETE MUST BE THOROUGHLY COMPACTED BY SPADING OR MECHANICAL VIBRATING TO PROVIDE DENSE CONCRETE FREE OF HONEY COMBING.

10. DIRECTLY AFTER FORMS HAVE BEEN REMOVED, ALL EXPOSED TIE WIRES AND STAPLED ENDS MUST BE REMOVED FROM CONCRETE SURFACES TO BE EXPOSED. CUT TIES FLUSH WITH FINISHED SURFACES FOR ALL OTHER CONCRETE. RUB SMOOTH OR CUT OFF FINS AND ROUGH PLACES. REMOVE ALL LOOSE CONCRETE AND OTHER IRREGULARITIES. PATCH AND FILL VOIDS WITH BONDING AGENT AS REQUIRED.

CONCRETE REINFORCEMENT:

1. REINFORCING STEEL MUST CONFORM TO ASTM A615 SUPPLEMENT SI, GRADE 60, OF DOMESTIC MANUFACTURER.

2. WELDED WIRE REINFORCEMENT MUST CONFORM TO ASTM A185. WELDED WIRE REINFORCEMENT MUST BE SUPPLIED IN FLAT SHEETS ONLY. LAP 9" MINIMUM.

3. REINFORCEMENT MUST BE FABRICATED TO SHAPES AND DIMENSIONS SHOWN AND MUST CONFORM TO THE REQUIREMENTS OF CONCRETE REINFORCING STEEL INSTITUTE(CRSI) AND ACI 318. REINFORCEMENT MUST BE COLD BENT UNLESS OTHERWISE AUTHORIZED. BENDING MAY BE ACCOMPLISHED IN THE FIELD OR AT THE MILL. BARS MUST NOT BE BENT AFTER EMBEDDED IN CONCRETE.

4. REINFORCEMENT MUST BE FREE FROM LOOSE RUST AND SCALE, DIRT, OIL, OR OTHER DELETERIOUS COATING THAT COULD REDUCE BOND WITH THE CONCRETE.

5. NO SPLICES OF REINFORCEMENT MUST BE PERMITTED EXCEPT AS DETAILED OR AUTHORIZED. MAKE BARS CONTINUOUS AROUND CORNERS WITH CORNER BARS. WHERE PERMITTED, SPLICES MADE BY CONTACT LAPS MUST BE CLASS "B" TENSION LAPS.

6. TENSION AND COMPRESSION REINFORCEMENT SPLICES IN CONCRETE MUST BE MADE AS FOLLOWS:

3000 PSI CONC	3500 PSI CONC	4000 PSI CONC	4500 PSI CONC
#4 BARS - 37"	#4 BARS - 35"	#4 BARS - 33"	#4 BARS - 31"
#5 BARS - 46"	#5 BARS - 43"	#5 BARS - 41"	#5 BARS - 38"
#6 BARS - 56"	#6 BARS - 52"	#6 BARS - 49"	#6 BARS - 46"
#7 BARS - 81"	#7 BARS - 75"	#7 BARS - 71"	#7 BARS - 67"

7. WHERE HOOKS ARE SHOWN, PROVIDE STANDARD 90° HOOKS IN ACCORDANCE WITH CRSI AND ACI 318, UNLESS NOTED OTHERWISE.

8. WHERE REQUIRED, PROVIDE DOWELS TO MATCH SIZE AND SPACING OF VERTICAL REINFORCING FROM FOUNDATION. DOWELS MUST HAVE STANDARD 90° HOOKS.

9. MINIMUM CONCRETE REINFORCING COVER REQUIREMENTS:	CAST-IN-PLACE CONCRETE COVER
a. CONCRETE CAST AGAINST EARTH:	3"
b. FORMED CONCRETE EXPOSED TO EARTH OR WEATHER:	
WALLS, SLABS:	
#6 BAR AND LARGER	2"
#5 BAR AND SMALLER	1½"
c. FORMED CONCRETE NOT EXPOSED TO WEATHER OR IN CONTACT WITH GROUND:	
WALLS, SLABS:	
#11 BAR AND SMALLER	¾"

10. ALL REINFORCING STEEL AND EMBEDDED ITEMS SUCH AS ANCHOR RODS AND WELD PLATES MUST BE PLACED TO PREVENT DISPLACEMENT BEYOND PERMITTED TOLERANCES.

11. DETAIL BARS IN ACCORDANCE WITH "ACI DETAILING MANUAL-2004", PUBLICATION SP-66, ACI 318, AND ACI 315, OR LATEST EDITIONS.

12. PROVIDE ACCESSORIES NECESSARY TO PROPERLY SUPPORT REINFORCING AT POSITIONS SHOWN ON PLANS

ABBREVIATION KEY

@	AT	L.L.	LIVE LOAD
ARCH	ARCHITECTURAL	LLH	LONG LEG HORIZONTAL
B/	BOTTOM OF	LLV	LONG LEG VERTICAL
BLDG	BUILDING	MAX.	MAXIMUM
BM	BEAM	MECH.	MECHANICAL
BTM.	BOTTOM	MFR.	MANUFACTURER
C.L.	CENTERLINE	MIN.	MINIMUM
CIP	CAST-IN-PLACE	mph	MILES PER HOUR
CJ	CONTROL JOINT	N/A	NOT APPLICABLE
CLR.	CLEAR	N.I.C.	NOT IN CONTRACT
CMU	CONCRETE MASONRY UNIT	N.S.	NEAR SIDE
COL.	COLUMN	N.T.S.	NOT TO SCALE
CONC.	CONCRETE	O/O	OUT TO OUT
CONST.	CONSTRUCTION	O.C.	ON CENTER
CONT.	CONTINUOUS	OPN'G	OPENING
DEG.	DEGREE	OPP.	OPPOSITE
DIA.	DIAMETER	PEMB	PRE-ENGINEERED METAL BUILDING SYSTEM
D.L.	DEAD LOAD		
DWG.	DRAWING	PL.	PLATE
DWL.	DOWEL	PJF	PRE-MOLDED JOINT FILLER
E.E.	EACH END	PROJ.	PROJECTION
E.F.	EACH FACE	PTB	POST-TENSION BEAM
ELEC.	ELECTRICAL	psf	POUNDS PER SQUARE FOOT
ELEV.	ELEVATION	psi	POUNDS PER SQUARE INCH
E.O.R.	ENGINEER OF RECORD	RCB	REINFORCED CONCRETE BEAM
E.O.S.	EDGE OF SLAB	REINF.	REINFORCEMENT
EQ.	EQUAL	REQ'D	REQUIRED
E.S.	EACH SIDE	SDSTSMS	SELF-DRILLING, SELF-TAPPING SHEET METAL SCREWS
E.W.	EACH WAY		
EXIST.	EXISTING	S.F.	SQUARE FOOT
EXP.	EXPANSION	SIM.	SIMILAR
EXT.	EXTERIOR	SQ.	SQUARE
FD	FLOOR DRAIN	STD.	STANDARD
FDN.	FOUNDATION	STL.	STEEL
F.P.	FLOOR PENETRATION	S.W.	SELF-WEIGHT
F.F.	FINISH FLOOR	T&B	TOP AND BOTTOM
F.S.	FAR SIDE	T/	TOP OF
FT.	FEET	THRD'D	THREADED
FTG	FOOTING	TOS	TOP OF STEEL
HK.	HOOK	TYP.	TYPICAL
HOR.	HORIZONTAL	U.N.O.	UNLESS NOTED OTHERWISE
H.S.	HEADED STUD	VERT.	VERTICAL
HSS	HOLLOW STRUCTURAL SECTION	w/	WITH
HT.	HEIGHT	W/C	WATER TO CEMENT
HVY.	HEAVY	WF	WIDE FLANGE
IN.	INCH	W.L.	WIND LOAD
INT.	INTERIOR	W.P.	WORKING POINT
K	KIPS	WT.	WEIGHT
ksi	1,000 POUNDS PER SQUARE INCH	WWR	WELDED WIRE REINFORCEMENT
lb	POUNDS		

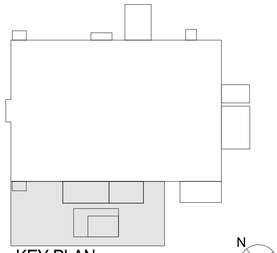

KEY PLAN
N.T.S.

N

SYM	DESCRIPTION	DATE	APPR.

NAVFAC

NORTH CAROLINA PROFESSIONAL SEAL 052546 ENGINEER RODNIQUA M. WINOR 5/4/26
SEAL

SUMMER CONSULTANTS INCORPORATED
4325 Lake Boone Trail|Suite 301|Raleigh, NC 27607
(984) 204-4500 | www.summerconsultants.com

FOR COMMANDER NAVFAC
ACTIVITY
SATISFACTORY TO DATE
DES RMM | DRW RMM | CHK JJS
<<PM/DM>> NICHOLAS A. HALL
BRANCH MANAGER PATRICK FAULKNER
CHIEF ENG/ARCH
<<XXX>>

DEPARTMENT OF THE NAVY
NAVAL FACILITIES ENGINEERING SYSTEMS COMMAND
FACILITIES ENGINEERING & ACQUISITIONS DIVISION
MCAS CHERRY POINT, NC

NAVAL FACILITIES ENGINEERING SYSTEMS COMMAND - MID-ATLANTIC
MCAS CHERRY POINT - CHERRY POINT, NC

CHERRY POINT, NC
REPLACE CHILLERS & COOLING TOWER
BUILDING 4225

STRUCTURAL NOTES

SCALE: AS NOTED
EPROJECT NO.: 7440851
CONSTR. CONTR. NO. NEVER INCLUDE
NAVFAC DRAWING NO. 12939349
SHEET 5 OF 39

S-002

File Path: X:\FY22\122006\04 CAD BIM\04.01 BIM
Plot Date: 4/29/2026 12:38:45 PM

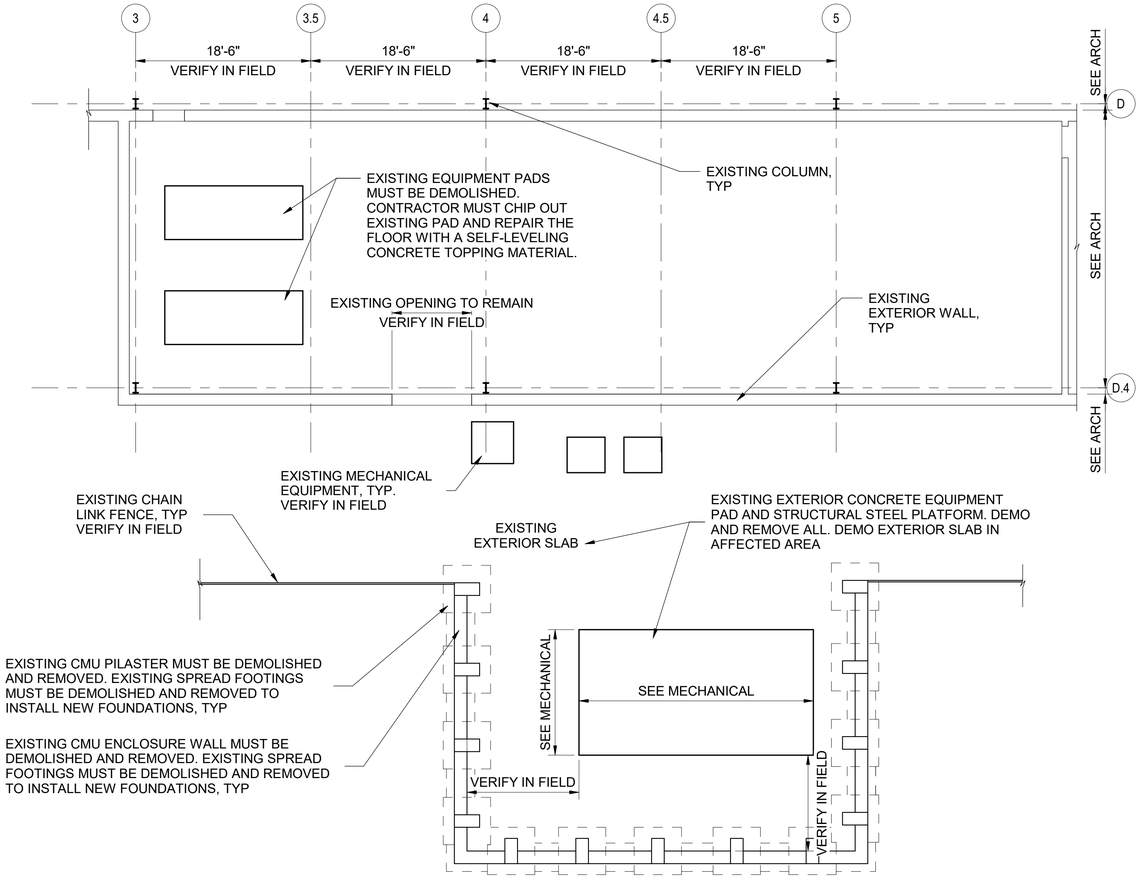

A1 FOUNDATION DEMO PLAN

1/8" = 1'-0"

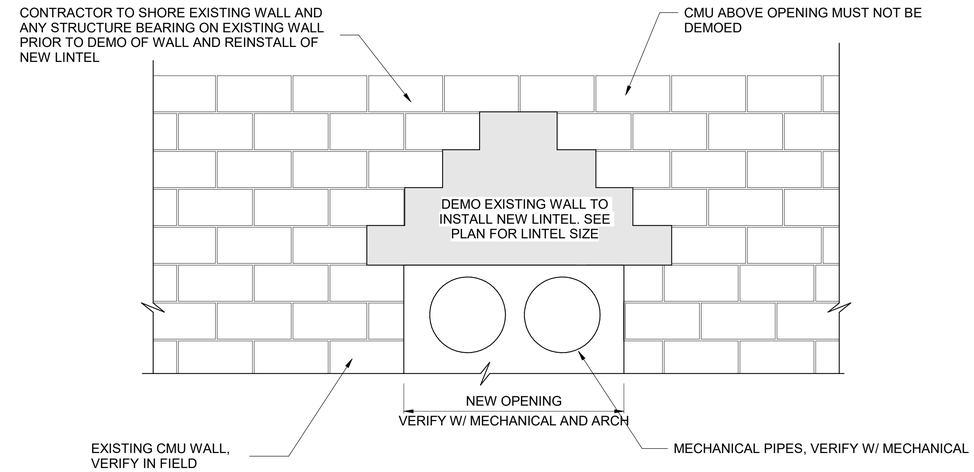

C3 NEW LINTEL IN EXISTING WALL DETAIL

3/4" = 1'-0"

NOTES:
1. SEE A1 / S-102 FOR LOCATION. VERIFY & COORDINATE WITH MECHANICAL

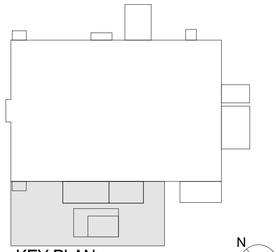

KEY PLAN
N.T.S.

N

SYM	DESCRIPTION	DATE	APPR.

NAVFAC

NORTH CAROLINA PROFESSIONAL SEAL 052546 ENGINEER RODNIQUA M. MINOR 5/14/26

SEAL

SUMMER CONSULTANTS INCORPORATED
4325 Lake Boone Trail|Suite 301|Raleigh, NC 27607
(984) 204-4500 | www.summerconsultants.com

FOR COMMANDER NAVFAC
ACTIVITY
SATISFACTORY TO DATE
DES RMM DRW RMM CHK JJS
<<PM/DM>> NICHOLAS A. HALL
BRANCH MANAGER PATRICK FALKNER
CHIEF ENG/ARCH
<<XXX>>

DEPARTMENT OF THE NAVY
NAVAL FACILITIES ENGINEERING SYSTEMS COMMAND
FACILITIES ENGINEERING & ACQUISITIONS DIVISION
MCAS CHERRY POINT, NC

NAVAL FACILITIES ENGINEERING SYSTEMS COMMAND
MCAS CHERRY POINT - CHERRY POINT, NC

CHERRY POINT, INC
REPLACE CHILLERS & COOLING TOWER
BUILDING 4225

FOUNDATION DEMO PLAN

SCALE: AS NOTED
EPROJECT NO.: 7440851
CONSTR. CONTR. NO. NEVER INCLUDE
NAVFAC DRAWING NO. 12939350
SHEET 6 OF 39

S-100

File Path: X:\FY22\122006\04 CAD BIM\04.01 BIM
Plot Date: 4/29/2026 12:38:45 PM

FOUNDATION PLAN NOTES:

1. SEE S-001 FOR STRUCTURAL GENERAL NOTES
2. F# DENOTES SPREAD FOOTING TYPE. SEE SCHEDULE FOR SIZE AND REINFORCING.

Spread Footing Schedule

Type Mark	Thickness	Length	Width	Reinforcement Details	Notes
F2.5	2' - 0"	2' - 6"	2' - 6"	(3) #6 EA DIRECTION T&B	
F3.11 x 2.0	2' - 0"	2' - 0"	3' - 11"	#6 @ 12" O.C. MAX EA WAY T&B	
F4.5 x 2.0	2' - 0"	2' - 0"	4' - 5"	#6 @ 12" O.C. MAX EA WAY T&B	
F5.5x2.25	2' - 0"	2' - 3"	5' - 5"	#6 @ 12" O.C. MAX EA WAY T&B	

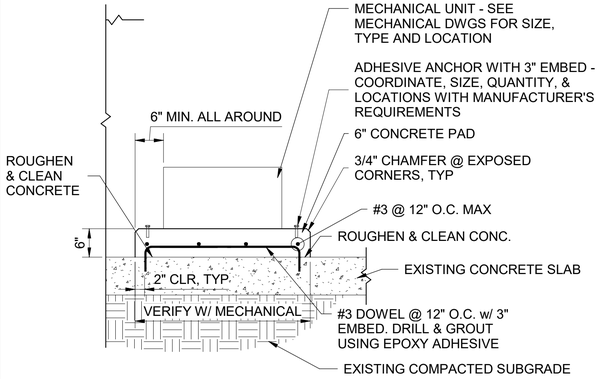

C1 INTERIOR EQUIPMENT PAD DETAIL
3/4" = 1'-0"

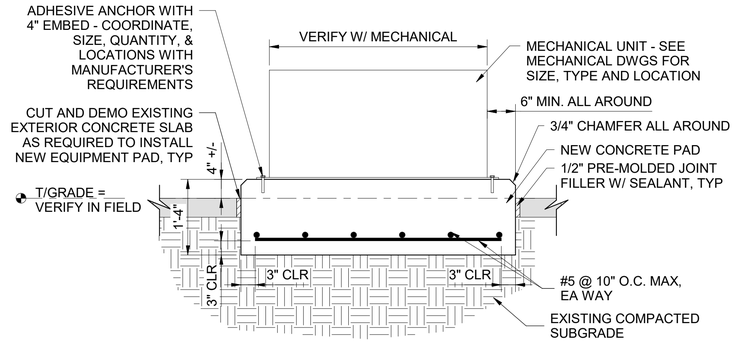

C2 EXTERIOR EQUIPMENT PAD DETAIL
3/4" = 1'-0"

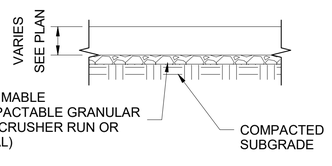

B1 TYPICAL EXTERIOR PAVING DETAIL
3/4" = 1'-0"

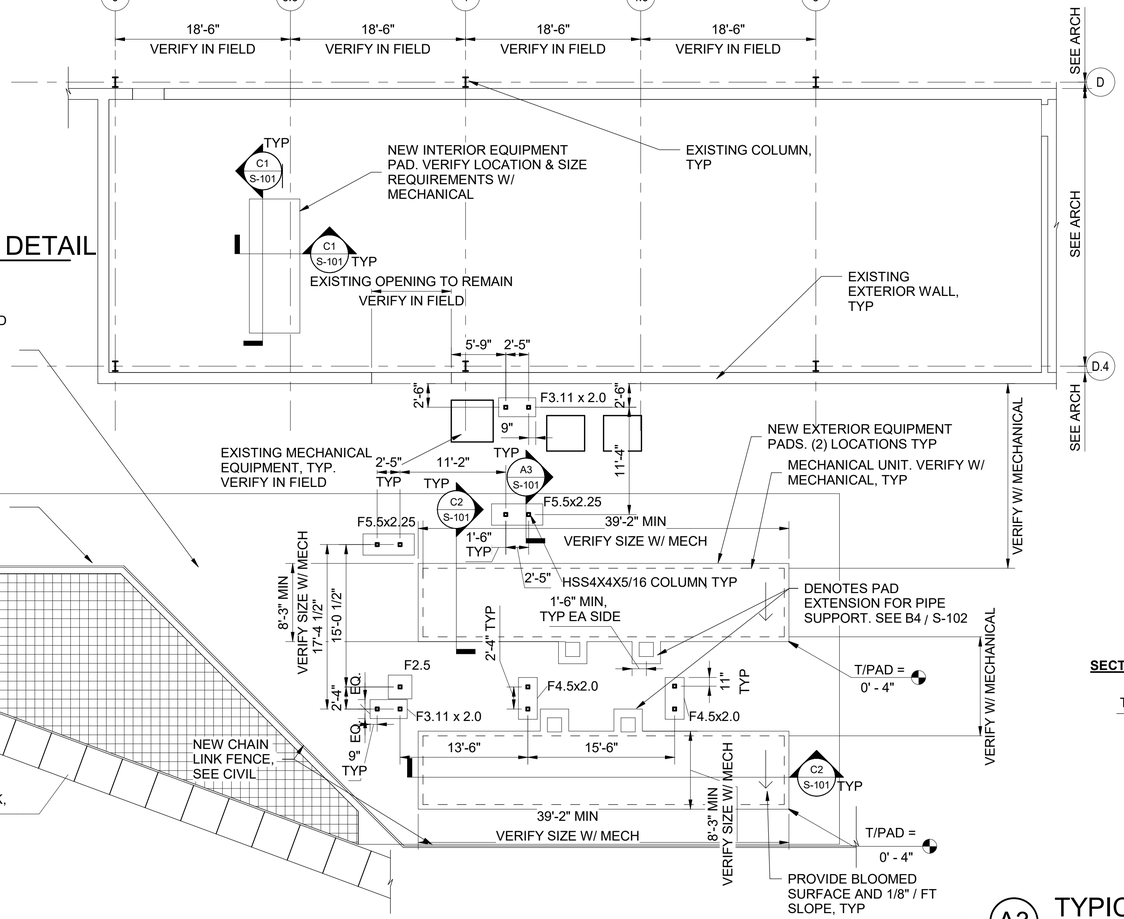

A1 FOUNDATION PLAN
1/8" = 1'-0"

NEW 4" EXTERIOR PAVING PER VERIFY EXTENTS OF EXISTING EXTERIOR SLAB IN THE FIELD & PROVIDE CONSTRUCTION JOINTS PER B1 / S-101 WHERE NEW SLAB MEETS EXISTING SLAB. D4 / S-101 PROVIDE MAX CONTROL JOINT SPACING OF 8'-0" x 8'-0" PER C4 / S-101

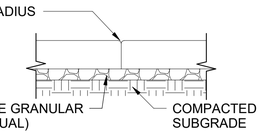

NOTES:
1. CONTROL JOINTS MAY REPLACE CONSTRUCTION JOINTS SEE C4 / S-101

2. WHERE THE CONSTRUCTION JOINT OCCURS BETWEEN THE NEW EXTERIOR SLAB AND EXISTING EXTERIOR SLAB, PROVIDE 1/2" PREMOLDED JOINT FILLER W/ SEALANT, TYP

D4 TYPICAL CONSTRUCTION JOINT DETAIL
3/4" = 1'-0"

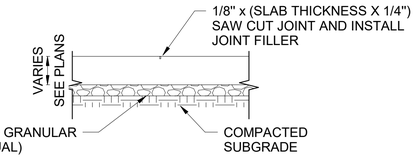

NOTES:
1. SLAB MUST BE SAWN AS SOON AS THE CONCRETE WILL SAFELY SUPPORT MEN AND EQUIPMENT.

2. FILL JOINT WITH SEALANT AFTER SLAB HAS BEEN CURED.

3. CONSTRUCTION JOINT MAY REPLACE CONTROL JOINT SEE D4 / S-101

C4 TYPICAL CONTROL JOINT DETAIL
3/4" = 1'-0"

ANCHOR ROD DIAM.	SQUARE WASHER SCHEDULE		
	SIZE (INCH)	BASEPLATE HOLE SIZE	THICKNESS
3/4" Ø	2	7/8" Ø	1/4"
1" Ø	3	1 1/8" Ø	3/8"
1 1/4" Ø	3	1 3/8" Ø	1/2"
1 1/2" Ø	3 1/2	1 5/8" Ø	1/2"
1 3/4" Ø	4	1 7/8" Ø	5/8"
2" Ø	5	2 1/8" Ø	3/4"

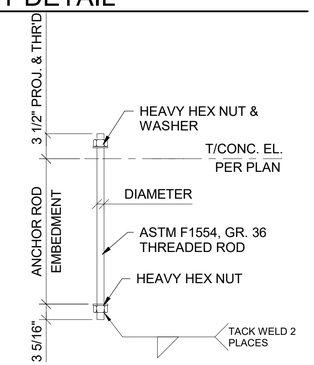

B4 ANCHOR BOLT DETAIL
3/4" = 1'-0"

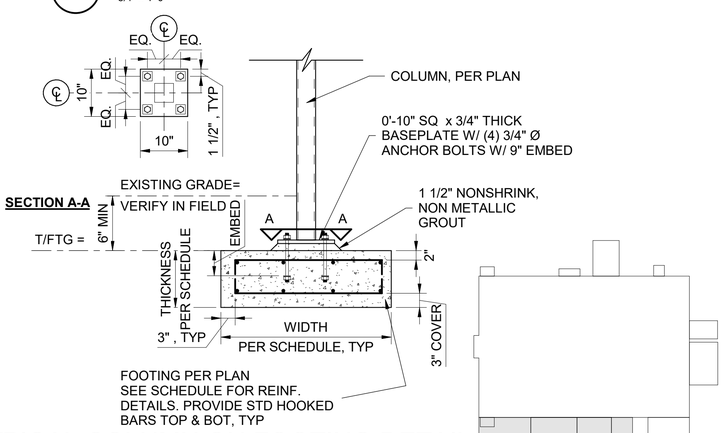

A3 TYPICAL COLUMN ON FOOTING DETAIL
3/4" = 1'-0"

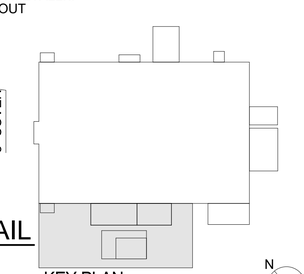

KEY PLAN
N.T.S.

N

SYM	DESCRIPTION	DATE	APPR.

NAVFAC

NORTH CAROLINA PROFESSIONAL SEAL 052546 ENGINEER RODNIQUA M. WINOR 5/4/26

SUMMER CONSULTANTS INCORPORATED
4325 Lake Boone Trail | Suite 301 | Raleigh, NC 27607
(984) 204-4500 | www.summerconsultants.com

FOR COMMANDER NAVFAC
ACTIVITY
SATISFACTORY TO DATE
DES RMM | DRW RMM | CHK JJS
<<PM/DM>> NICHOLAS A. HALL
BRANCH MANAGER PATRICK FALKNER
CHIEF ENG/ARCH
<<XXX>>

DEPARTMENT OF THE NAVY
NAVAL FACILITIES ENGINEERING & ACQUISITIONS DIVISION
NAVAL FACILITIES ENGINEERING SYSTEMS COMMAND
FACILITIES ENGINEERING SYSTEMS COMMAND - MID-ATLANTIC
MCAS CHERRY POINT - CHERRY POINT, NC
MCAS CHERRY POINT, NC
CHERRY POINT, NC
REPLACE CHILLERS & COOLING TOWER
BUILDING 4225
FOUNDATION PLAN

SCALE: AS NOTED
EPROJECT NO.: 7440851
CONSTR. CONTR. NO.: NEVER INCLUDE
NAVFAC DRAWING NO.: 12939351
SHEET 7 OF 39

S-101

File Path: X:\FY22\122006\04 CAD BIM\04.01 BIM
Plot Date: 4/29/2026 12:38:45 PM

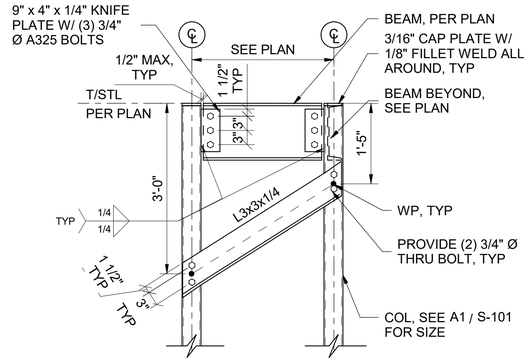

C1 BRACE DETAIL
3/4" = 1'-0"

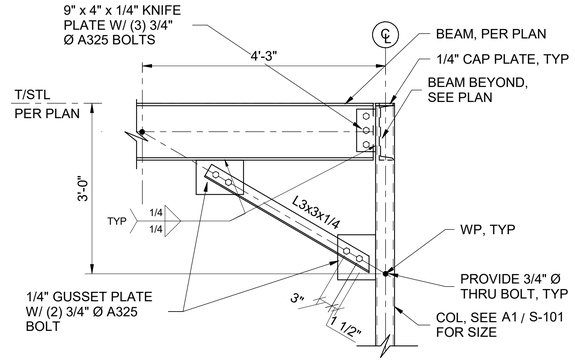

C2 BRACE DETAIL
3/4" = 1'-0"

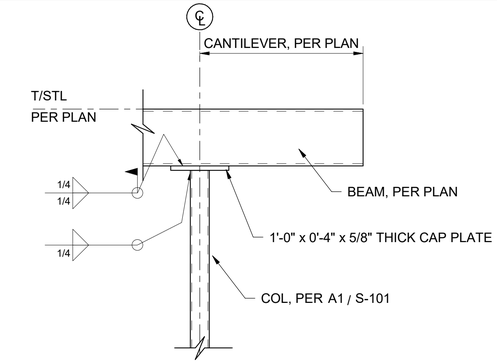

C3 BEAM OVER COLUMN DETAIL
3/4" = 1'-0"

FRAMING PLAN NOTES:

1. SEE S-001 FOR STRUCTURAL GENERAL NOTES
2. L-# DENOTES LINTEL. SEE LINTEL SCHEDULE.

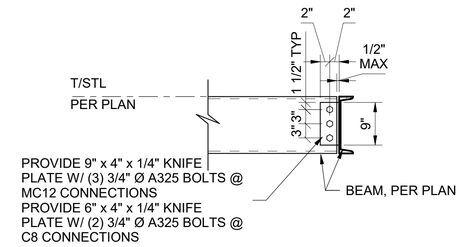

C4 TYPICAL BEAM TO BEAM DETAIL
3/4" = 1'-0"

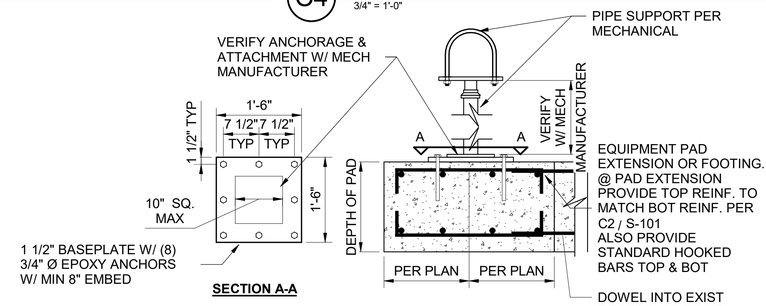

B4 TYPICAL PIPE SUPPORT DETAIL
3/4" = 1'-0"

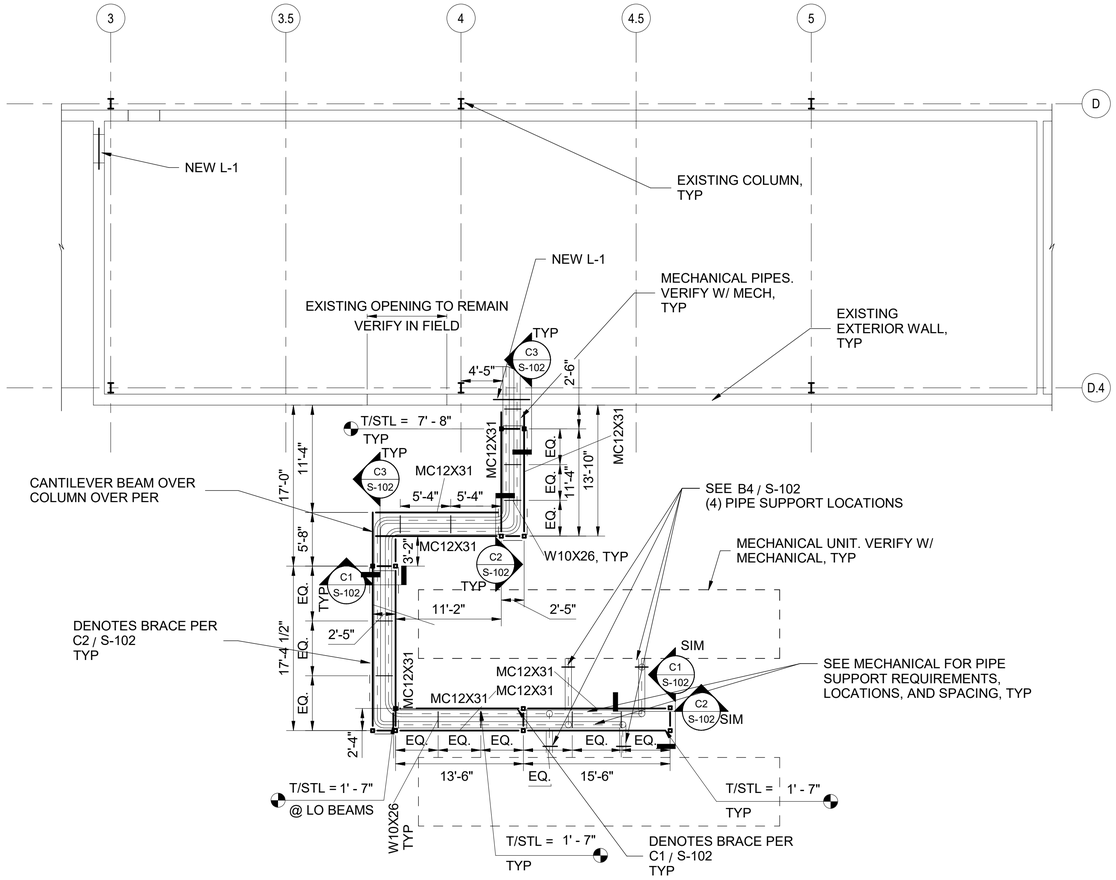

A1 PIPE SUPPORT FRAMING PLAN
1/8" = 1'-0"

NOTE: W10x26 INFILL BEAMS SHALL BE MOVED TO ACCOMODATE PIPE SUPPORTS. VERYIFY LOCATIONS WITH MECHANICAL. IF A BEAM IS MORE THAN 2'-0" AWAY FROM REQUIRED PIPE SUPPORT, A NEW W10x26 BEAM SHALL BE ADDED TO ACCOMODATE THAT REQUIRED PIPE SUPPORT.

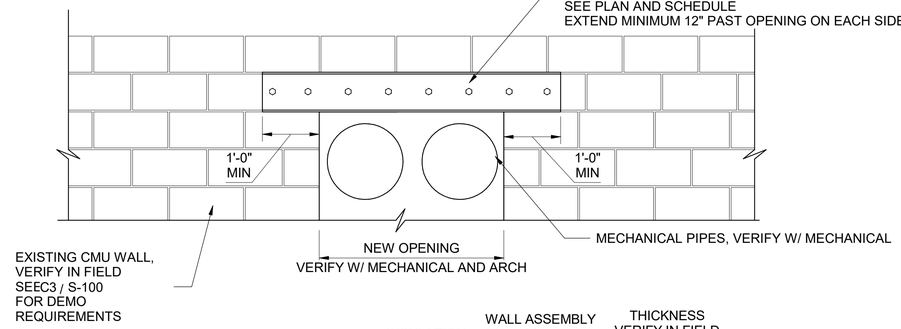

STEEL LINTEL SCHEDULE	
MARK	BEAM SIZE
L-1	(2) C8x11.5

NOTE:

1. LINTEL MUST EXTEND 12" EACH SIDE
2. SEE C3 / S-100 FOR DEMO REQUIREMENTS
3. INSTALL BRICK FACADE AFTER NEW LINTEL HAS COMPLETELY BEEN INSTALLED

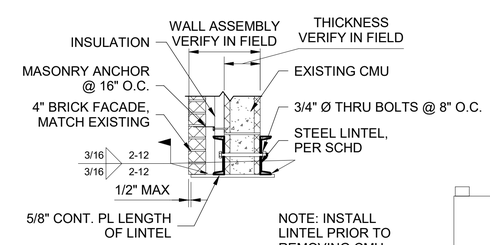

A3 TYPICAL STEEL LINTEL DETAIL
3/4" = 1'-0"

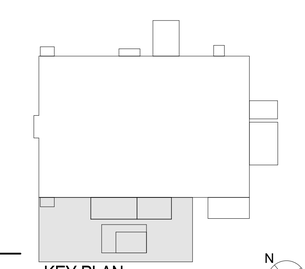

KEY PLAN
N.T.S.

SYM	DESCRIPTION	DATE	APPR.

NAVFAC

NORTH CAROLINA PROFESSIONAL SEAL 052546 ENGINEER RODNIQUA M. MINOR 5/4/26

SUMMER CONSULTANTS INCORPORATED
4325 Lake Boone Trail|Suite 301|Raleigh, NC 27607
(984) 204-4500 | www.summerconsultants.com

FOR COMMANDER NAVFAC
ACTIVITY
SATISFACTORY TO DATE
DES RMM | DRW RMM | CHK JJS
<<PM/DM>> NICHOLAS A. HALL
BRANCH MANAGER PATRICK FALKNER
CHIEF ENG/ARCH
<<XXX>>

DEPARTMENT OF THE NAVY
NAVAL FACILITIES ENGINEERING SYSTEMS COMMAND - MID-ATLANTIC
FACILITIES ENGINEERING & ACQUISITIONS DIVISION
MCAS CHERRY POINT, NC

NAVAL FACILITIES ENGINEERING SYSTEMS COMMAND
MCAS CHERRY POINT - CHERRY POINT, NC

CHERRY POINT, NC
REPLACE CHILLERS & COOLING TOWER
BUILDING 4225
FRAMING PLAN

SCALE: AS NOTED
EPROJECT NO.: 7440851
CONSTR. CONTR. NO. NEVER INCLUDE
NAVFAC DRAWING NO. 12939352
SHEET 8 OF 39
S-102

Plot Date: 4/29/2026 12:38:46 PM File Path: X:\FY22\122060\04 CAD BIM\04.01 BIM

ABBREVIATIONS

A.D.	ACCESS DOOR
A.F.F.	ABOVE FINISHED FLOOR
AHU	AIR HANDLING UNIT
AS	AIR SEPARATOR
BHP	BRAKE HORSEPOWER
BTU	BRITISH THERMAL UNITS
BTUH	BRITISH THERMAL UNITS PER HOUR
CFM	CUBIC FEET PER MINUTE
C.O.	CLEANOUT
CW	DOMESTIC COLD WATER
CWP	CHILLED WATER PUMP
D.B.	DRY BULB
db	DECIBEL
DDC	DIRECT DIGITAL CONTROL
DIA	DIAMETER
DN.	DOWN
(E)	EXISTING
EFF.	EFFICIENCY
ELEV.	ELEVATION/ELEVATOR
E.S.P.	EXTERNAL STATIC PRESSURE
ET	EXPANSION TANK
°F	DEGREES FAHRENHEIT
FLA	FULL LOAD AMPS
FL.D.	FLOOR DRAIN
FT.	FEET
GAL.	GALLON
GPM	GALLONS PER MINUTE
HP	HORSEPOWER
HWP	HEATING WATER PUMP
HWR	HEATING WATER RETURN
HWS	HEATING WATER SUPPLY
Hz	HERTZ
IN.	INCHES
LBS.	POUNDS
MER	MECHANICAL EQUIPMENT ROOM
MIN.	MINIMUM
M.O.D.	MOTOR OPERATED DAMPER
NC	NOISE CRITERIA
N.C.	NORMALLY CLOSED
N.I.C.	NOT IN CONTRACT
N.O.	NORMALLY OPEN
O.A.	OUTSIDE AIR
O.C.	ON CENTER
P.D.	PRESSURE DROP
PH	PHASE
PRV	PRESSURE RELIEF VALVE
PSI	POUNDS PER SQUARE INCH
PSIG	POUNDS PER SQUARE INCH GAUGE
RLA	RUNNING LOAD AMPS
RPZ	REDUCED PRESSURE ZONE
RTU	ROOFTOP UNIT
TYP.	TYPICAL
UH	UNIT HEATER
V	VOLTS

SYMBOLS

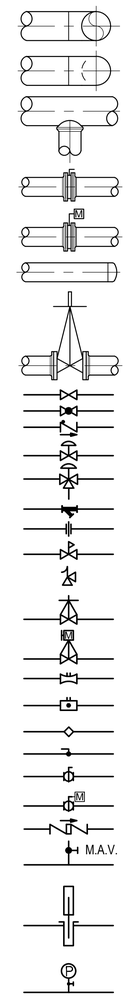

DOUBLE LINE PIPE TURN UP
DOUBLE LINE PIPE TURN DOWN
FORGED BRANCH PIPE FITTING
PROVIDE FULL LUG BUTTERFLY ISOLATION VALVES
PROVIDE MOTORIZED, FULL LUG BUTTERFLY ISOLATION VALVES
PIPE CAP
PROVIDE OS&Y ISOLATION VALVES
GATE VALVE
GLOBE VALVE
SWING CHECK VALVE
TWO-WAY CONTROL VALVE
THREE-WAY CONTROL VALVE
STRAINER
UNION
PRESSURE REDUCING VALVE
SAFETY RELIEF VALVE
O.S.&Y VALVE
MOTORIZED O.S.&Y VALVE
FLOW MEASURING VALVE
COMBINATION FLOW MEASURING AND BALANCING VALVE
BALANCING VALVE
BALL VALVE
BUTTERFLY VALVE
MOTORIZED BUTTERFLY VALVE
BACKFLOW PREVENTER
MANUAL AIR VENT 3/8" BALL VALVE
THERMOMETER AND WELL
PRESSURE GAUGE

GENERAL SYMBOLS

FLOOR PLAN AND DETAIL TITLES:

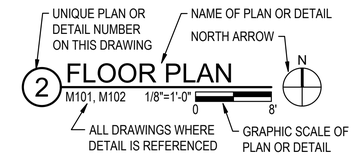

2-PART REFERENCE DETAIL IDENTIFICATION:

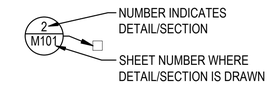

SECTION IDENTIFICATION

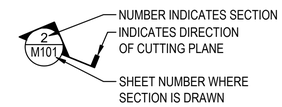

NORTH ARROW

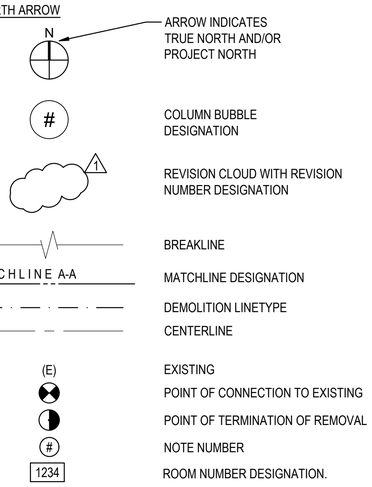

SYMBOLS

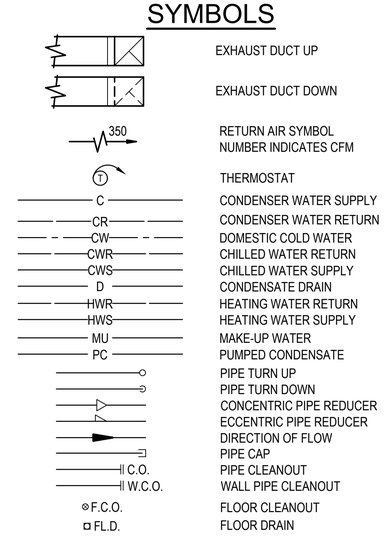

SYM	DESCRIPTION	DATE	APPR.

NAVFAC

NORTH CAROLINA PROFESSIONAL ENGINEER SEAL 039797 ROBERT A. POINTER
05/04/2026

SUMMER CONSULTANTS INCORPORATED
4325 Lake Boone Trail|Suite 301|Raleigh, NC 27607
(984) 204-4500 | www.summerconsultants.com

FOR COMMANDER NAVFAC
ACTIVITY
SATISFACTORY TO DATE

DES	ZAC	DRW	ZAC	CHK	WAN

<<PM/DM>> NICHOLAS A. HALL
BRANCH MANAGER PATRICK FAULKNER
CHIEF ENG/ARCH
<<XXX>>

DEPARTMENT OF THE NAVY
NAVAL FACILITIES ENGINEERING SYSTEMS COMMAND
FACILITIES ENGINEERING & ACQUISITIONS DIVISION

NAVAL FACILITIES ENGINEERING SYSTEMS COMMAND - MID-ATLANTIC
MCAS CHERRY POINT - CHERRY POINT, NC

MCAS CHERRY POINT, NC
CHERRY POINT, NC
REPLACE CHILLERS & COOLING TOWER
BUILDING 4225

SYMBOLS & ABBREVIATIONS

SCALE: AS NOTED
EPROJECT NO.: 7440851
CONSTR. CONTR. NO.
NAVFAC DRAWING NO. 12939353
SHEET 9 OF 39

M-001

FILE NAME: 231.007 M-001.DWG
OUR REF: 231.007
PLOT DATE: 4/30/2026 2:20:40 PM

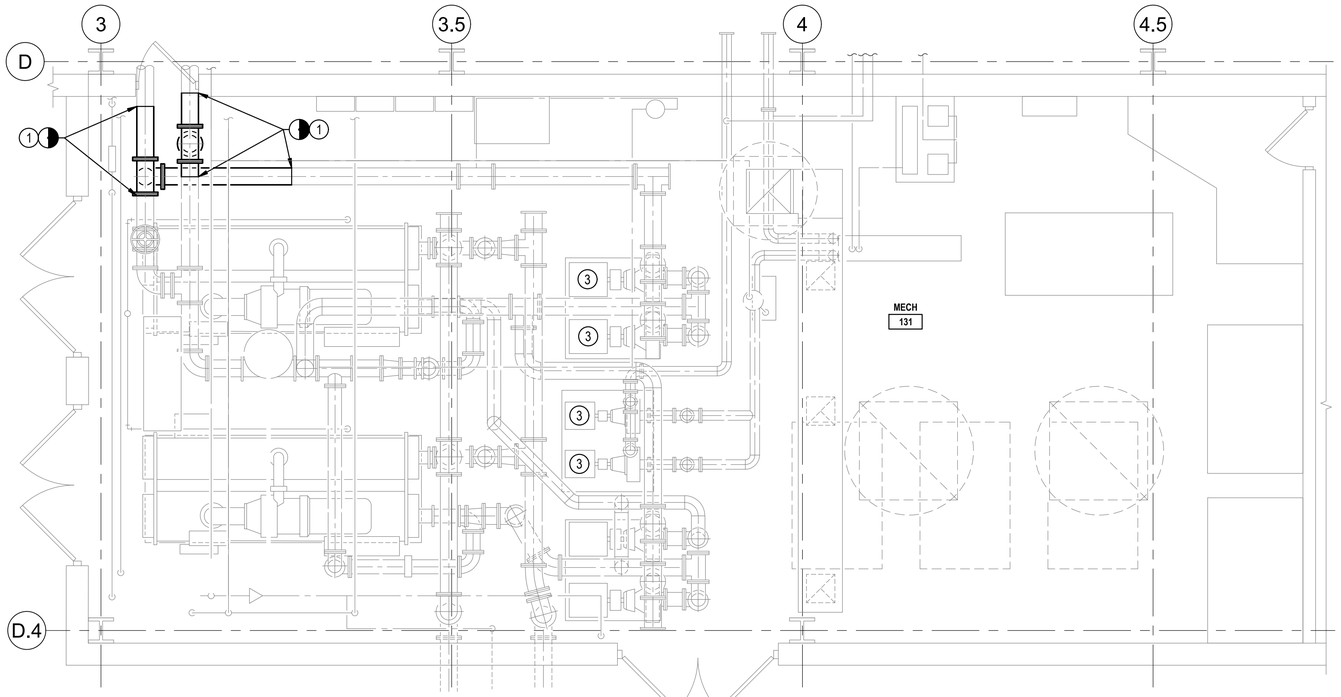

1 PHASING PLAN - DEMO

1/4"=1'-0"

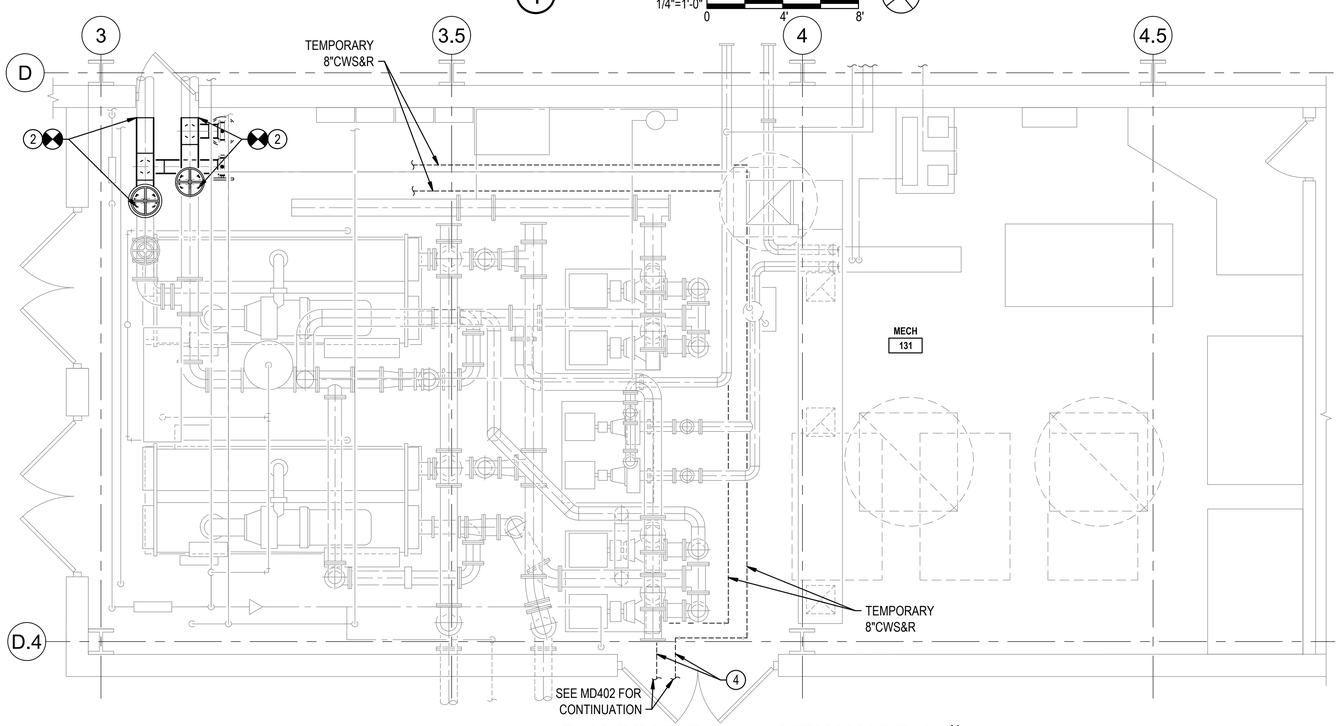

2 PHASING PLAN - NEW WORK

1/4"=1'-0"

(E) EQUIPMENT SCHEDULE [B]

UNIT NO.	GPM	NOTES
RTU-1	23.6	
RTU-2	4.8	
RTU-3	26.9	
RTU-4	12.5	
RTU-5	4.3	
RTU-7	18.8	
RTU-8	58.1	
RTU-9	13	
RTU-10	20.6	
RTU-14	4.1	
AHU-1	10.5	
AHU-2	5.9	
AHU-4	88.2	
AHU-22-301	63.2	
AHU-22-303	-	A
AHU-22-304	-	A
AHU-22-306	-	A

NOTES

A. OBTAIN PRE-TAB CHILLED WATER COIL FLOW MEASUREMENT PRIOR TO CONSTRUCTION.

B. PROVIDED FOR REFERENCE ONLY.

SEQUENCING NOTES

1. THE PROJECT MUST BE BUILT WHILE THE BUILDING REMAINS IN SERVICE AND OCCUPIED, AND MUST REMAIN IN SERVICE, EXCEPT FOR SCHEDULED OUTAGES.
2. GOVERNMENT WILL PROVIDE TEMPORARY CHILLER PRIOR TO START OF CONSTRUCTION. PROVIDE SKID MOUNTED CHILLED WATER PUMP. PUMP MUST BE TIED INTO THE EXISTING BUILDING SYSTEMS OVER A WEEKEND OUTAGE.
3. PROVIDE ALL NECESSARY VALVES, ACCESSORIES, TEMPORARY PIPING AND APPURTENANCES NECESSARY TO OPERATE TEMPORARY CHILLER. PROVIDE ISOLATION VALVES NECESSARY TO ISOLATE ACTIVE ZONES OF THE CHILLED WATER DISTRIBUTION SYSTEM FROM THE AREA OF WORK.
4. AFTER INSTALLATION OF PERMANENT CHILLER EQUIPMENT, START-UP AND SWITCHOVER WILL OCCUR WITH PRIOR APPROVAL FROM THE CONTRACTING OFFICER, AT LEAST 2 WEEKS IN ADVANCE. FOR START-UP, PROVIDE ISOLATION VALVES AT THE TEMPORARY EQUIPMENT FOR SWITCHOVER WITHOUT THE NEED FOR DE-COUPLING OR DRAIN DOWN.

NOTES

1. OVER A WEEKEND OUTAGE REMOVE 8"CWS&R COMPLETE TO POINTS INDICATED.
2. OVER A WEEKEND OUTAGE, CUT IN AND PROVIDE PERMANENTLY MOUNTED 8" TEMPORARY CHILLER CONNECTIONS.
3. PRIOR TO CONSTRUCTION, OBTAIN BASELINE OPERATING DATA FOR THE EXISTING CHILLED WATER SYSTEM, INCLUDING SECONDARY PUMP DIFFERENTIAL HEAD AND TOTAL BUILDING CHILLED WATER FLOW. OBTAIN OPERATING DATA WITH ALL CHILLED WATER COIL CONTROL VALVES AT 100%, 80%, & 60% OPEN. EXISTING EQUIPMENT CHILLED WATER FLOW RATES ARE PROVIDED FOR REFERENCE ONLY.
4. ROUTE TEMPORARY 8"CWS&R PIPING THROUGH EXISTING DOORWAY. PROVIDE TEMPORARY PLYWOOD WEATHER BARRIER TO MAINTAIN WEATHER TIGHTNESS.

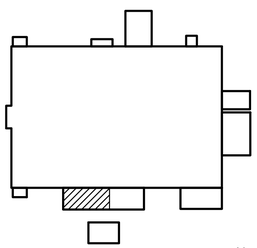

KEY PLAN
N.T.S.

CYM	DESCRIPTION	DATE	APPR

NAVFAC

NORTH CAROLINA PROFESSIONAL SEAL 039797 ENGINEER ROBERT A. POINTER

05/04/2026

SUMMER CONSULTANTS INCORPORATED
4325 Lake Boone Trail|Suite 301|Raleigh, NC 27607
(984) 204-4500 | www.summerconsultants.com

FOR COMMANDER NAVFAC
ACTIVITY
SATISFACTORY TO DATE

DES	ZAC	DRW	ZAC	CHK	WAN

<<PM/DM>> NICHOLAS A. HALL
BRANCH MANAGER PATRICK FAULKNER
CHIEF ENG/ARCH
<<XXX>>

DEPARTMENT OF THE NAVY
NAVAL FACILITIES ENGINEERING SYSTEMS COMMAND
FACILITIES ENGINEERING & ACQUISITIONS DIVISION

NAVAL FACILITIES ENGINEERING SYSTEMS COMMAND
MCAS CHERRY POINT - CHERRY POINT, NC

MCAS CHERRY POINT, NC
CHERRY POINT, NC
REPLACE CHILLERS & COOLING TOWER
BUILDING 4225

SEQUENCING PLAN

SCALE: AS NOTED
EPROJECT NO.: 7440851
CONSTR. CONTR. NO.
NAVFAC DRAWING NO. 12939354
SHEET 10 OF 39
M-002

FILE NAME: 231.007 M-002.DWG
OUR REF: 231.007
PLOT DATE: 4/30/2026 2:20:49 PM

GENERAL NOTES

G1. VERIFY LOCATION AND DIMENSIONS OF EXISTING EQUIPMENT AND COORDINATE ALL WORK PRIOR TO THE START OF CONSTRUCTION.

NOTES

1. NOT USED.

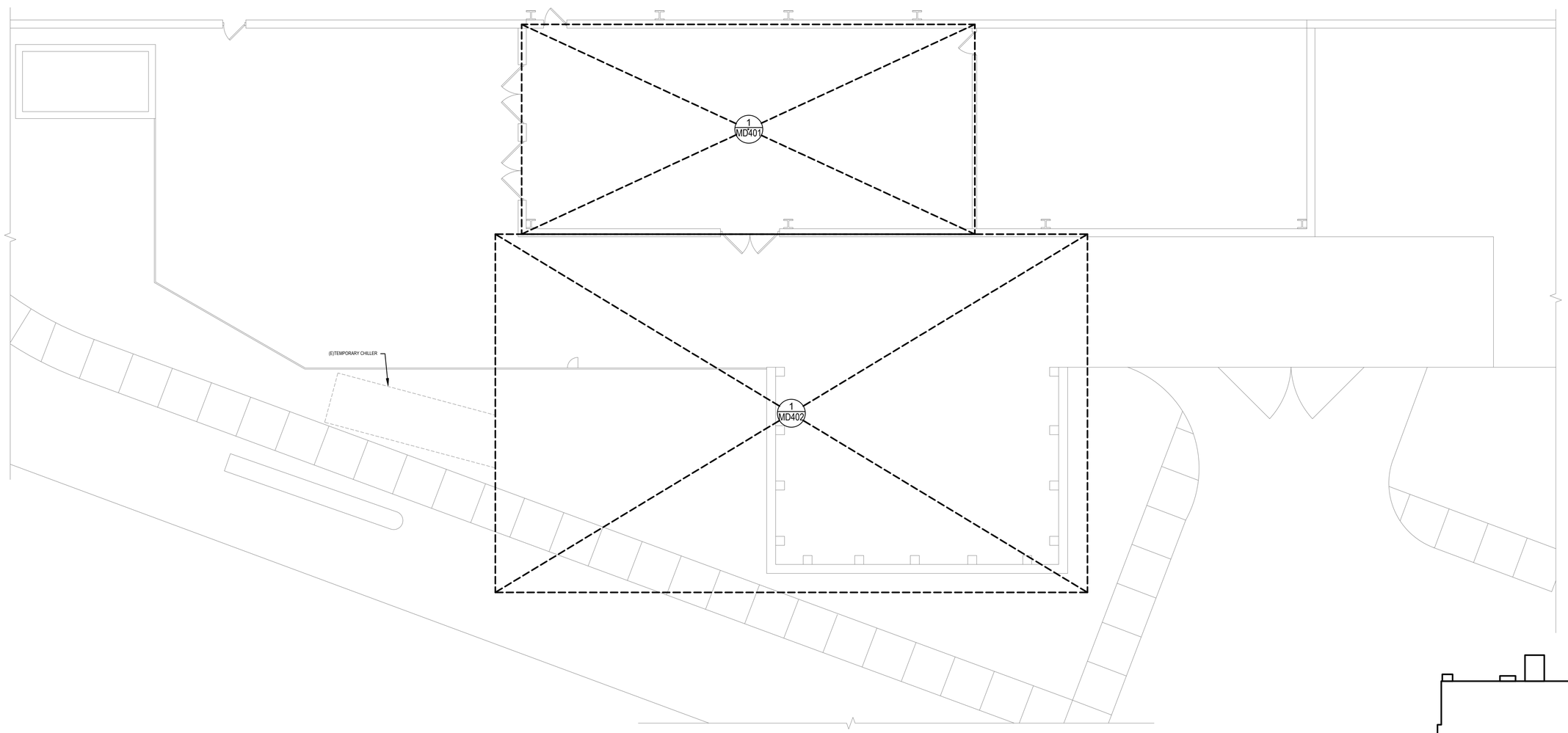

1 OVERALL PLAN - DEMOLITION
1/8"=1'-0"
0 8' 16'

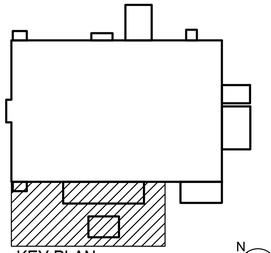

KEY PLAN
N.T.S.

SYM	DESCRIPTION	DATE	APPR

NAVFAC

NORTH CAROLINA PROFESSIONAL SEAL 039797 ENGINEER ROBERT A. POINTER

05/04/2026

SUMMER CONSULTANTS INCORPORATED
4325 Lake Boone Trail|Suite 301|Raleigh, NC 27607
(984) 204-4500 | www.summerconsultants.com

FOR COMMANDER NAVFAC
ACTIVITY
SATISFACTORY TO DATE

DES	ZAC	DRW	ZAC	CHK	WAN

<<PM/DM>> NICHOLAS A. HALL
BRANCH MANAGER PATRICK FAULKNER
CHIEF ENG/ARCH
<<XX>>

DEPARTMENT OF THE NAVY
NAVAL FACILITIES ENGINEERING SYSTEMS COMMAND
FACILITIES ENGINEERING & ACQUISITIONS DIVISION

NAVAL FACILITIES ENGINEERING SYSTEMS COMMAND - MID-ATLANTIC
MCAS CHERRY POINT - CHERRY POINT, NC

MCAS CHERRY POINT, NC
CHERRY POINT, NC
REPLACE CHILLERS & COOLING TOWER
BUILDING 4225

OVERALL PLAN - DEMOLITION

SCALE: AS NOTED
EPROJECT NO.: 7440851
CONSTR. CONTR. NO.
NAVFAC DRAWING NO.
12939355
SHEET 11 OF 39

MD101

FILE NAME: 231.007 MD101.DWG
OUR REF: 231.007
PLOT DATE: 4/30/2026 2:20:57 PM

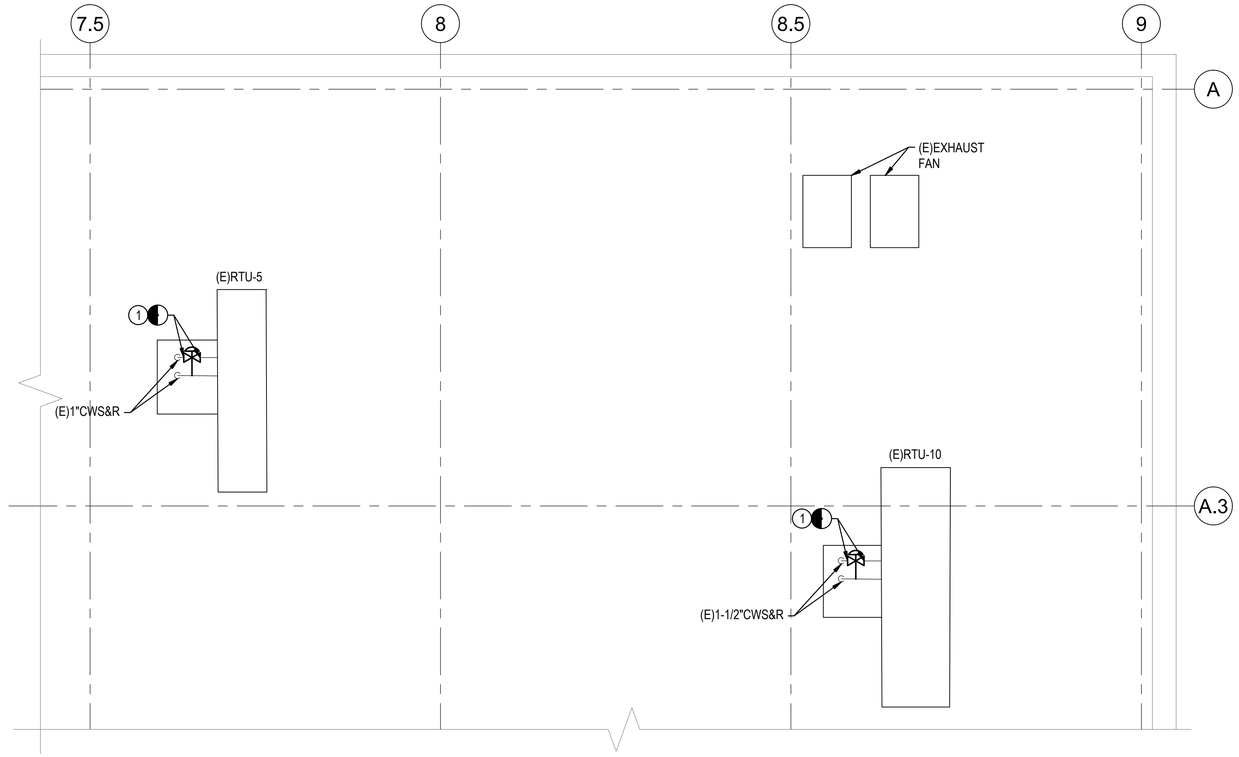

1 (E)RTU-5&10 CONTROL VALVES - DEMOLITION

1/4"=1'-0" 0 4' 8'

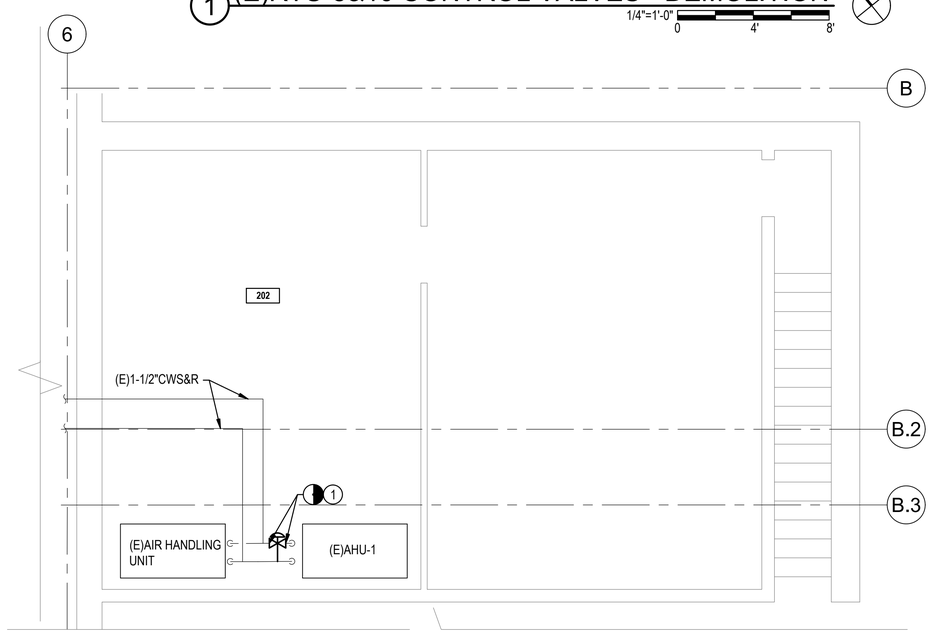

2 (E)AHU-1 CONTROL VALVE - DEMOLITION

1/4"=1'-0" 0 4' 8'

GENERAL NOTES

G1. VERIFY LOCATION AND DIMENSIONS OF EXISTING EQUIPMENT AND COORDINATE ALL WORK PRIOR TO THE START OF CONSTRUCTION.

NOTES

1. OVER A WEEKEND OUTAGE, REMOVE EXISTING THREE-WAY CONTROL VALVE AND ASSOCIATED BYPASS PIPING AND PROVIDE TWO WAY CONTROL VALVE. BALANCE NEW VALVE PER SCHEDULE ON M-601.

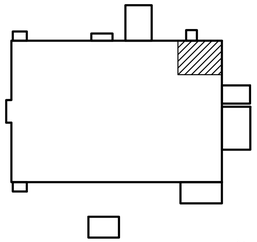

KEY PLAN
N.T.S.

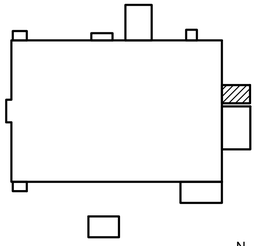

KEY PLAN
N.T.S.

CYM	DESCRIPTION	DATE	APPR

NAVFAC

NORTH CAROLINA PROFESSIONAL SEAL 039797 ENGINEER ROBERT A. POINTER

05/04/2026

SUMMER CONSULTANTS INCORPORATED
4325 Lake Boone Trail|Suite 301|Raleigh, NC 27607
(984) 204-4500 | www.summerconsultants.com

FOR COMMANDER NAVFAC
ACTIVITY
SATISFACTORY TO DATE

DES	ZAC	DRW	ZAC	CHK	WAN

<<PM/DM>> NICHOLAS A. HALL
BRANCH MANAGER PATRICK FAULKNER
CHIEF ENG/ARCH
<<XXX>>

DEPARTMENT OF THE NAVY
NAVAL FACILITIES ENGINEERING SYSTEMS COMMAND
FACILITIES ENGINEERING & ACQUISITIONS DIVISION
NAVAL FACILITIES ENGINEERING SYSTEMS COMMAND - MID-ATLANTIC
MCAS CHERRY POINT - CHERRY POINT, NC
MCAS CHERRY POINT, NC
CHERRY POINT, NC
REPLACE CHILLERS & COOLING TOWER
BUILDING 4225
CONTROL VALVE PLAN - DEMOLITION

SCALE: AS NOTED
EPROJECT NO.: 7440851
CONSTR. CONTR. NO.
NAVFAC DRAWING NO. 12939356
SHEET 12 OF 39
MD102

FILE NAME: 231.007 MD102.DWG
OUR REF: 231.007
PLOT DATE: 4/30/2026 2:21:03 PM

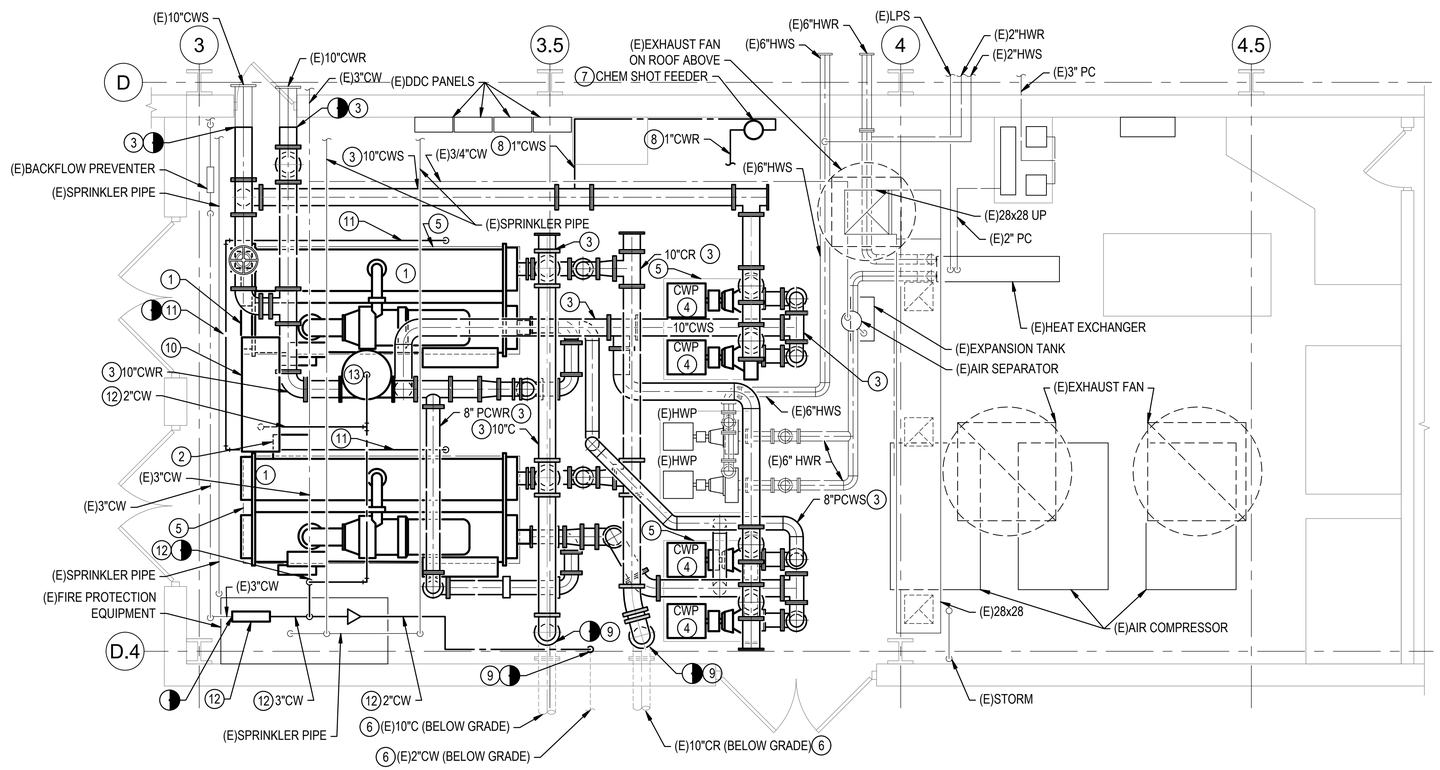

1 MECHANICAL ROOM PLAN - DEMOLITION

1/4"=1'-0"

0 4' 8'

N

GENERAL NOTES

G1. VERIFY LOCATION AND DIMENSIONS OF EXISTING EQUIPMENT AND COORDINATE ALL WORK PRIOR TO THE START OF CONSTRUCTION.

NOTES

1. REMOVE CHILLER AND ALL ASSOCIATED PIPING, SUPPORTS, CONTROLS, AND APPURTENANCES COMPLETE. CAPTURE AND DISPOSE OF REFRIGERANT PER SPECIFICATIONS.
2. REMOVE REFRIGERANT MONITORING SYSTEM AND ALL ASSOCIATED CONTROLS INCLUDING CONTROLLER, SENSOR, ALARM, LIGHT, WIRING, TUBE FOR AIR SAMPLING, AND HORNS. ASSOCIATED EXHAUST FAN TO REMAIN FOR REUSE.
3. REMOVE PIPING AND ALL ASSOCIATED INSULATION, SUPPORTS, AND APPURTENANCES COMPLETE TO POINTS INDICATED.
4. REMOVE END SUCTION PUMP AND ALL ASSOCIATED SUPPORTS, CONTROLS, PIPING AND APPURTENANCES COMPLETE.
5. REMOVE EQUIPMENT PAD COMPLETE. REPAIR FLOOR BELOW TO MATCH ADJACENT.
6. FILL AND ABANDON PIPE BELOW GRADE.
7. REMOVE CHEMICAL FEEDER AND ALL ASSOCIATED SUPPORTS AND APPURTENANCES COMPLETE.
8. REMOVE PIPING, AND ALL ASSOCIATED INSULATION, SUPPORTS, AND APPURTENANCES COMPLETE.
9. REMOVE PIPING AND ALL ASSOCIATED INSULATION, SUPPORTS, AND APPURTENANCES TO 6" BELOW FINISHED FLOOR, FILL AND CAP. PATCH CONCRETE SLAB TO MATCH EXISTING CONDITIONS.
10. REMOVE EXPANSION TANK AND ALL ASSOCIATED SUPPORTS AND APPURTENANCES COMPLETE.
11. REMOVE REFRIGERANT RELIEF PIPING COMPLETE TO ROOF PENETRATION. CAP AND ABANDON PIPE AT ROOF PENETRATION.
12. REMOVE BACKFLOW PREVENTER AND ALL ASSOCIATED DRAIN AND MAKE UP WATER PIPING COMPLETE TO POINTS INDICATED.
13. REMOVE AIR SEPARATOR AND ALL ASSOCIATED SUPPORTS AND APPURTENANCES COMPLETE.

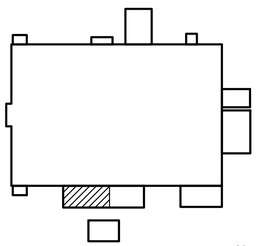

KEY PLAN
N.T.S.

SYM	DESCRIPTION	DATE	APPR

NAVFAC

NORTH CAROLINA PROFESSIONAL SEAL 039797 ENGINEER ROBERT A. POINTER
05/04/2026

SUMMER CONSULTANTS INCORPORATED
4325 Lake Boone Trail|Suite 301|Raleigh, NC 27607
(984) 204-4500 | www.summerconsultants.com

FOR COMMANDER NAVFAC
ACTIVITY
SATISFACTORY TO DATE

DES	ZAC	DRW	ZAC	CHK	WAN

<<PM/DM>> NICHOLAS A. HALL
BRANCH MANAGER PATRICK FAULKNER
CHIEF ENG/ARCH
<<XXX>>

DEPARTMENT OF THE NAVY
NAVAL FACILITIES ENGINEERING SYSTEMS COMMAND
FACILITIES ENGINEERING & ACQUISITIONS DIVISION

NAVAL FACILITIES ENGINEERING SYSTEMS COMMAND - MID-ATLANTIC
MCAS CHERRY POINT - CHERRY POINT, NC

MCAS CHERRY POINT, NC
CHERRY POINT, NC
REPLACE CHILLERS & COOLING TOWER
BUILDING 4225

MECHANICAL ROOM PLAN - DEMOLITION

SCALE: AS NOTED
EPROJECT NO.: 7440851
CONSTR. CONTR. NO.
NAVFAC DRAWING NO. 12939357
SHEET 13 OF 39
MD401

FILE NAME: 231.007 MD401.DWG
OUR REF: 231.007
PLOT DATE: 4/30/2026 2:21:11 PM

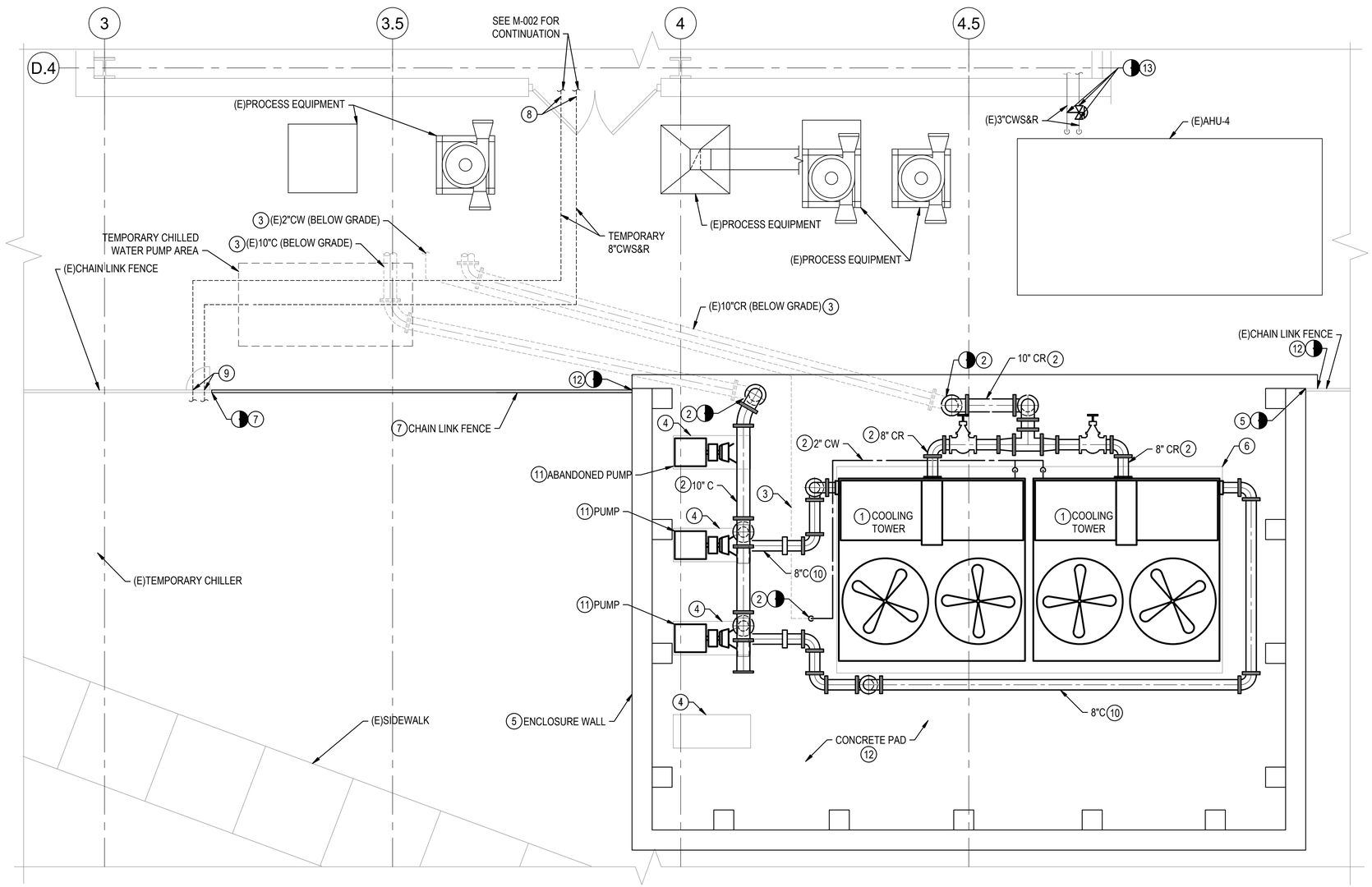

1 YARD PLAN - DEMOLITION

1/4"=1'-0"

0 4' 8'

N

GENERAL NOTES

G1. VERIFY LOCATION AND DIMENSIONS OF EXISTING EQUIPMENT AND COORDINATE ALL WORK PRIOR TO THE START OF CONSTRUCTION.

NOTES

1. REMOVE COOLING TOWER AND ALL ASSOCIATED CONTROLS, EQUALIZING AND BYPASS PIPING, APPURTENANCES, AND DRAIN PIPING COMPLETE.
2. REMOVE PIPING, AND ALL ASSOCIATED INSULATION, SUPPORTS, AND APPURTENANCES TO 6" BELOW GRADE, FILL AND CAP. PATCH CONCRETE SLAB TO MATCH EXISTING CONDITIONS.
3. FILL AND ABANDON PIPE BELOW GRADE.
4. REMOVE EQUIPMENT PAD COMPLETE. REPAIR FLOOR BELOW TO MATCH ADJACENT.
5. REMOVE CMU ENCLOSURE WALL COMPLETE. ENCLOSURE WALL IS APPROXIMATELY 17' TALL. SEE STRUCTURAL DRAWINGS FOR MORE REQUIREMENTS.
6. REMOVE COOLING TOWER EQUIPMENT CONCRETE SUPPORTS COMPLETE. SEE STRUCTURAL DRAWINGS FOR MORE REQUIREMENTS.
7. REMOVE CHAIN LINK FENCE COMPLETE TO POINTS INDICATED. SEE CIVIL DRAWINGS FOR MORE REQUIREMENTS.
8. ROUTE TEMPORARY 8"CWS&R PIPING THROUGH EXISTING DOORWAY. PROVIDE TEMPORARY PLYWOOD WEATHER BARRIER TO MAINTAIN WEATHER TIGHTNESS.
9. REUSE EXISTING FENCE PIPE CUT-OUTS FOR TEMPORARY CHILLER CONNECTION DURING CONSTRUCTION.
10. REMOVE PIPING, AND ALL ASSOCIATED INSULATION, SUPPORTS, AND APPURTENANCES COMPLETE.
11. REMOVE END SUCTION PUMP AND ALL ASSOCIATED SUPPORTS, CONTROLS, PIPING AND APPURTENANCES COMPLETE.
12. REMOVE CONCRETE ENCLOSURE PAD COMPLETE TO POINTS INDICATED.
13. OVER A WEEKEND OUTAGE, REMOVE EXISTING THREE-WAY CONTROL VALVE AND ASSOCIATED BYPASS PIPING AND PROVIDE TWO WAY CONTROL VALVE. BALANCE NEW VALVE PER SCHEDULE ON M-601.

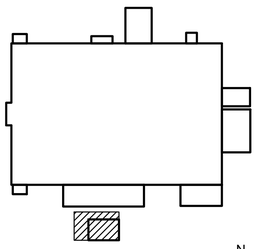

KEY PLAN

N.T.S.

N

CYM	DESCRIPTION	DATE	APPR

NAVFAC

NORTH CAROLINA PROFESSIONAL SEAL 039797 ENGINEER ROBERT A. POINTER

05/04/2026

SUMMER CONSULTANTS INCORPORATED
4325 Lake Boone Trail|Suite 301|Raleigh, NC 27607
(984) 204-4500 | www.summerconsultants.com

FOR COMMANDER NAVFAC

ACTIVITY

SATISFACTORY TO DATE

DES	ZAC	DRW	ZAC	CHK	WAN

<<PM/DM>> NICHOLAS A. HALL

BRANCH MANAGER PATRICK FAULKNER

CHIEF ENG/ARCH

<<XXX>>

DEPARTMENT OF THE NAVY
NAVAL FACILITIES ENGINEERING SYSTEMS COMMAND
FACILITIES ENGINEERING & ACQUISITIONS DIVISION

NAVAL FACILITIES ENGINEERING SYSTEMS COMMAND
MCAS CHERRY POINT - CHERRY POINT, NC

MCAS CHERRY POINT, NC
CHERRY POINT, NC

REPLACE CHILLERS & COOLING TOWER
BUILDING 4225

YARD PLAN - DEMOLITION

SCALE: AS NOTED

EPROJECT NO.: 7440851

CONSTR. CONTR. NO.

NAVFAC DRAWING NO. 12939358

SHEET 14 OF 39

MD402

FILE NAME: 231.007 MD402.DWG
OUR REF: 231.007
PLOT DATE: 4/30/2026 2:21:21 PM

GENERAL NOTES

G1. ALL WORK SHALL BE NEW AND PROVIDED UNDER THIS CONTRACT UNLESS SPECIFICALLY MARKED "EXISTING", "EXIST.", OR "(E)".

G2. VERIFY LOCATION AND DIMENSIONS OF EXISTING EQUIPMENT AND COORDINATE ALL WORK PRIOR TO THE START OF CONSTRUCTION.

NOTES

1. PROVIDE CONCRETE PAD FLUSH TO GRADE. SEE STRUCTURAL DRAWINGS FOR MORE DETAILS.
2. AFTER TEMPORARY CHILLER HAS BEEN DE-MOBILIZED, PROVIDE CONCRETE PAD FOR TEMPORARY CHILLER LAYDOWN AREA. PAD MUST FLUSH TO GRADE. SEE STRUCTURAL DRAWINGS FOR MORE DETAILS.

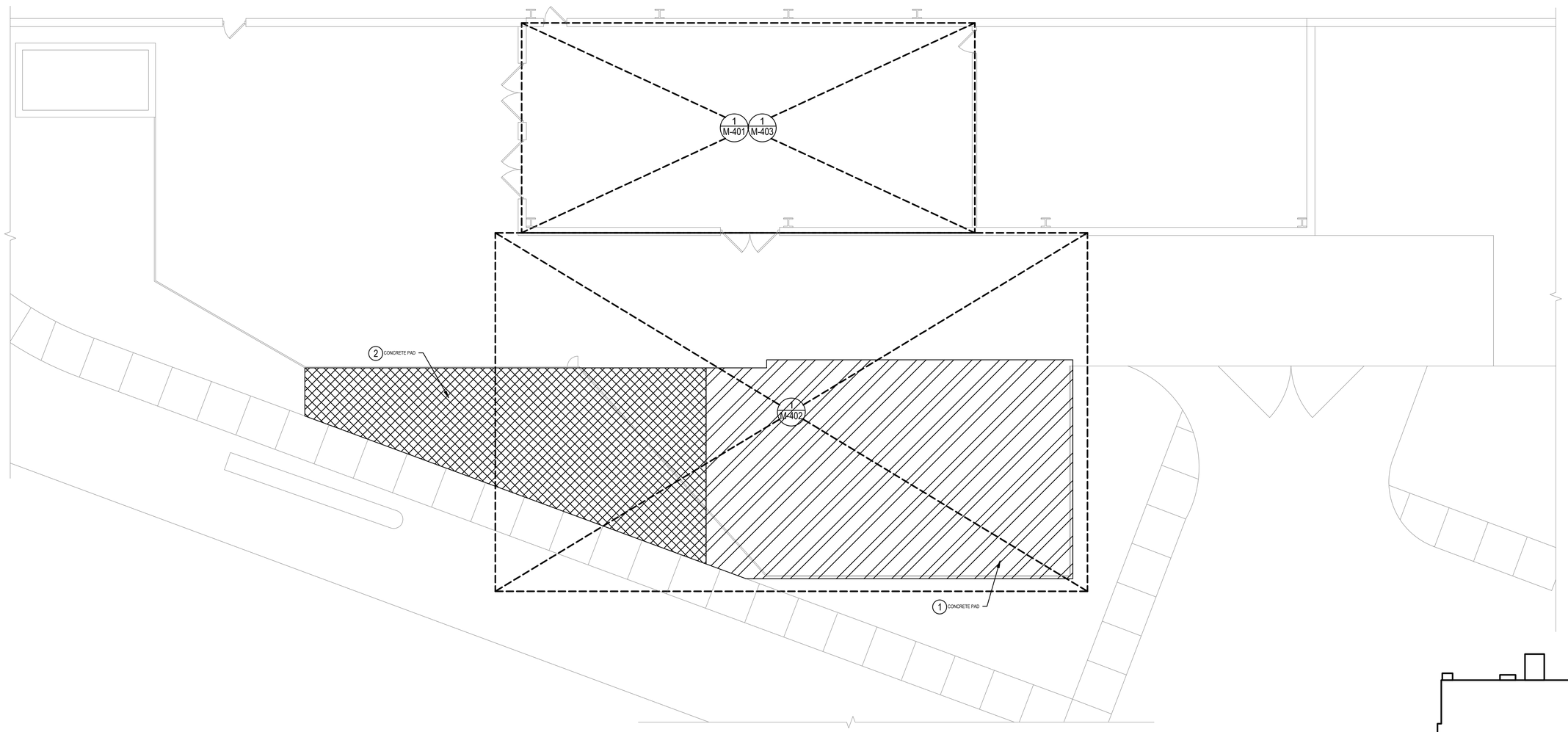

1 OVERALL PLAN
1/8"=1'-0"
0 8' 16'

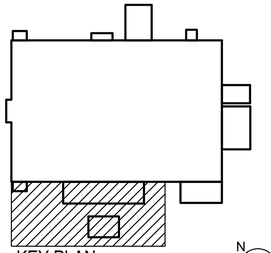

KEY PLAN
N.T.S.

CYM	DESCRIPTION	DATE	APPR

NAVFAC

NORTH CAROLINA PROFESSIONAL SEAL 039797 ENGINEER ROBERT A. POINTER

05/04/2026

SUMMER CONSULTANTS INCORPORATED
4325 Lake Boone Trail|Suite 301|Raleigh, NC 27607
(984) 204-4500 | www.summerconsultants.com

FOR COMMANDER NAVFAC
ACTIVITY
SATISFACTORY TO DATE

DES ZAC	DRW ZAC	CHK WAN

<<PM/DM>> NICHOLAS A. HALL
BRANCH MANAGER PATRICK FAULKNER
CHIEF ENG/ARCH
<<XX>>

DEPARTMENT OF THE NAVY
NAVAL FACILITIES ENGINEERING SYSTEMS COMMAND
FACILITIES ENGINEERING & ACQUISITIONS DIVISION

NAVAL FACILITIES ENGINEERING SYSTEMS COMMAND - MID-ATLANTIC
MCAS CHERRY POINT - CHERRY POINT, NC

MCAS CHERRY POINT, NC
CHERRY POINT, NC
REPLACE CHILLERS & COOLING TOWER
BUILDING 4225

OVERALL PLAN

SCALE: AS NOTED
EPROJECT NO.: 7440851
CONSTR. CONTR. NO.
NAVFAC DRAWING NO. 12939359
SHEET 15 OF 39

M-101

FILE NAME: 231.007 M-101.DWG
OUR REF: 231.007
PLOT DATE: 4/30/2026 2:21:29 PM

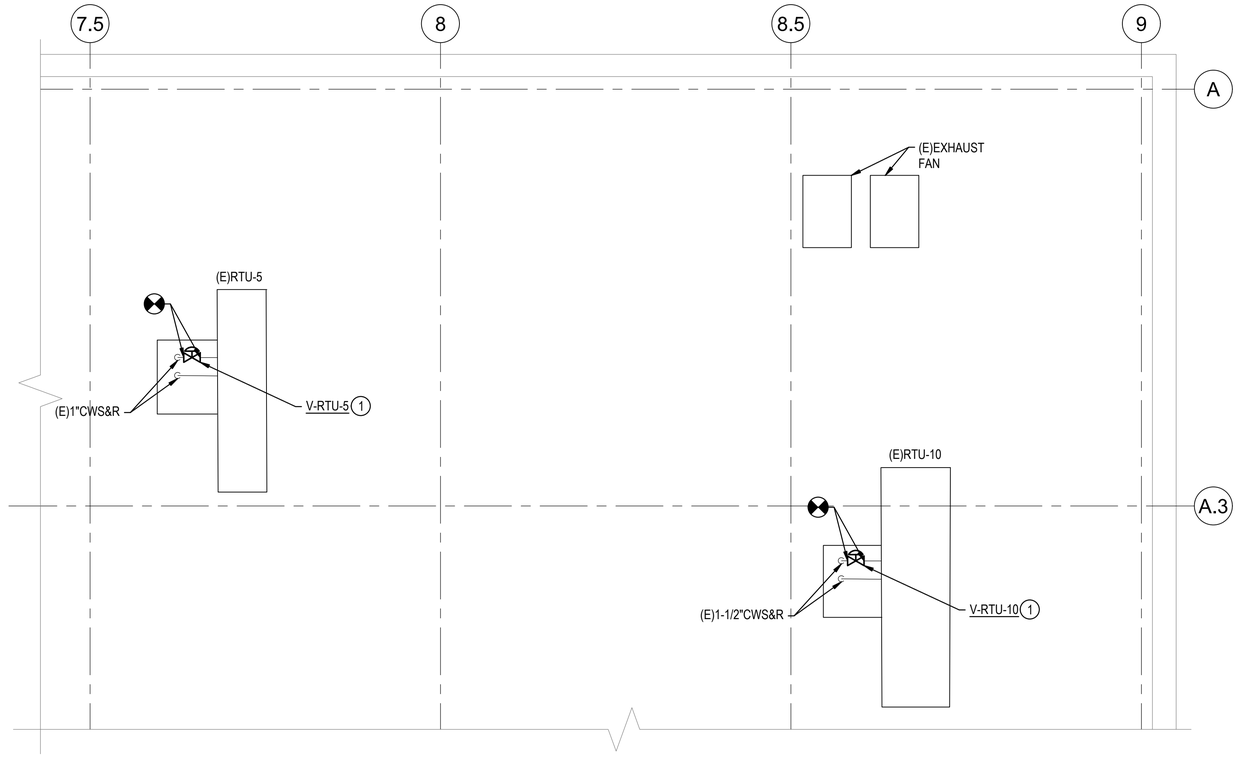

1 (E)RTU-5&10 CONTROL VALVES

1/4"=1'-0" 0 4' 8'

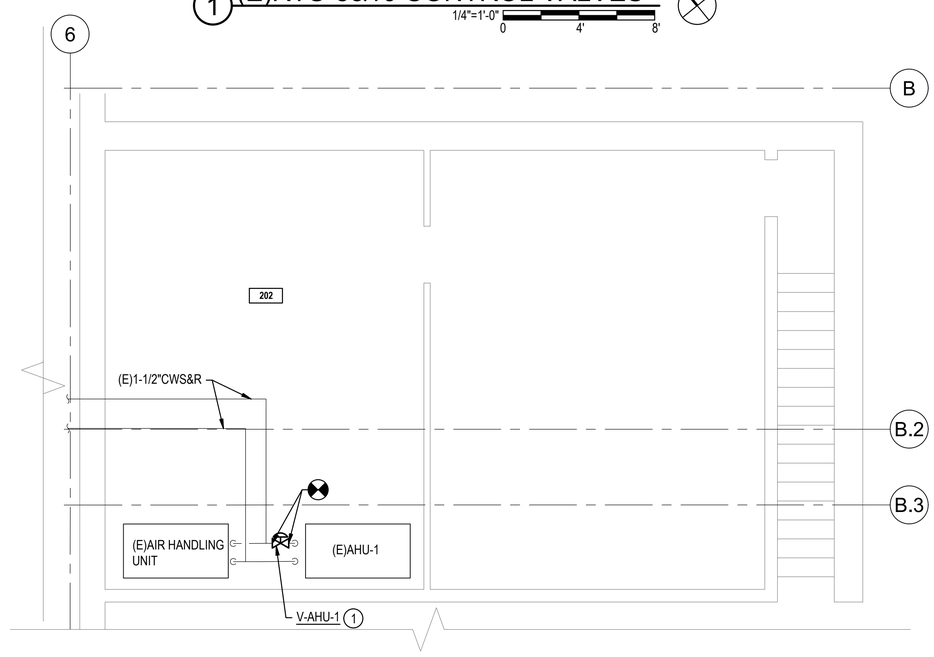

2 (E)AHU-1 CONTROL VALVE

1/4"=1'-0" 0 4' 8'

GENERAL NOTES

G1. ALL WORK MUST BE NEW AND PROVIDED UNDER THIS CONTRACT UNLESS SPECIFICALLY MARKED "EXISTING", "EXIST.", OR "(E)".

G2. VERIFY LOCATION AND DIMENSIONS OF EXISTING EQUIPMENT AND COORDINATE ALL WORK PRIOR TO THE START OF CONSTRUCTION.

NOTES

1. OVER A WEEKEND OUTAGE, REMOVE EXISTING THREE-WAY CONTROL VALVE AND ASSOCIATED BYPASS PIPING AND PROVIDE TWO WAY CONTROL VALVE. BALANCE NEW VALVE PER SCHEDULE ON M-601.

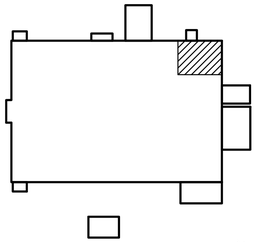

KEY PLAN
N.T.S.

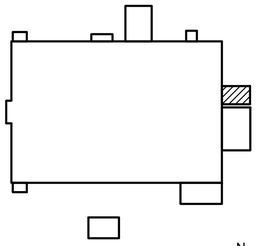

KEY PLAN
N.T.S.

SYM	DESCRIPTION	DATE	APPR

NAVFAC

NORTH CAROLINA PROFESSIONAL SEAL 039797 ENGINEER ROBERT A. POINTER

05/04/2026

SUMMER CONSULTANTS INCORPORATED
4325 Lake Boone Trail|Suite 301|Raleigh, NC 27607
(984) 204-4500 | www.summerconsultants.com

FOR COMMANDER NAVFAC
ACTIVITY
SATISFACTORY TO DATE

DES	ZAC	DRW	ZAC	CHK	WAN

<<PM/DM>> NICHOLAS A. HALL
BRANCH MANAGER PATRICK FAULKNER
CHIEF ENG/ARCH
<<XX>>

DEPARTMENT OF THE NAVY
NAVAL FACILITIES ENGINEERING SYSTEMS COMMAND
FACILITIES ENGINEERING & ACQUISITIONS DIVISION
NAVAL FACILITIES ENGINEERING SYSTEMS COMMAND - MID-ATLANTIC
MCAS CHERRY POINT - CHERRY POINT, NC

MCAS CHERRY POINT, NC
REPLACE CHILLERS & COOLING TOWER BUILDING 4225

CONTROL VALVE PLAN

SCALE: AS NOTED
EPROJECT NO.: 7440851
CONSTR. CONTR. NO.
NAVFAC DRAWING NO. 12939360
SHEET 16 OF 39

M-102

FILE NAME: 231.007 M-102.DWG
OUR REF: 231.007
PLOT DATE: 4/30/2026 2:21:36 PM

GENERAL NOTES

G1. ALL WORK MUST BE NEW AND PROVIDED UNDER THIS CONTRACT UNLESS SPECIFICALLY MARKED "EXISTING", "EXIST.", OR "(E)".

G2. VERIFY LOCATION AND DIMENSIONS OF EXISTING EQUIPMENT AND COORDINATE ALL WORK PRIOR TO THE START OF CONSTRUCTION.

NOTES

1. PROVIDE EQUIPMENT PAD 6" BEYOND THE EXTENTS OF EQUIPMENT ON ALL SIDES PER STRUCTURAL DETAIL.
2. PROVIDE PUMP PER DETAIL 5/M-501.
3. PROVIDE EXPANSION TANK PER DETAIL 2/M-501.
4. PROVIDE CHEMICAL FEEDER PER DETAIL 4/M-501.
5. OVER A WEEKEND OUTAGE, CUT IN AND PROVIDE PERMANENTLY MOUNTED 8" TEMPORARY CHILLER CONNECTIONS.
6. PROVIDE ROOM THERMOSTAT. SEE (E)EXHAUST FAN SEQUENCE ON M-702 FOR MORE DETAILS.
7. MOUNT RPZ-1 IN READILY ACCESSIBLE LOCATION.
8. HEIGHT IS FROM BOTTOM OF PIPE.

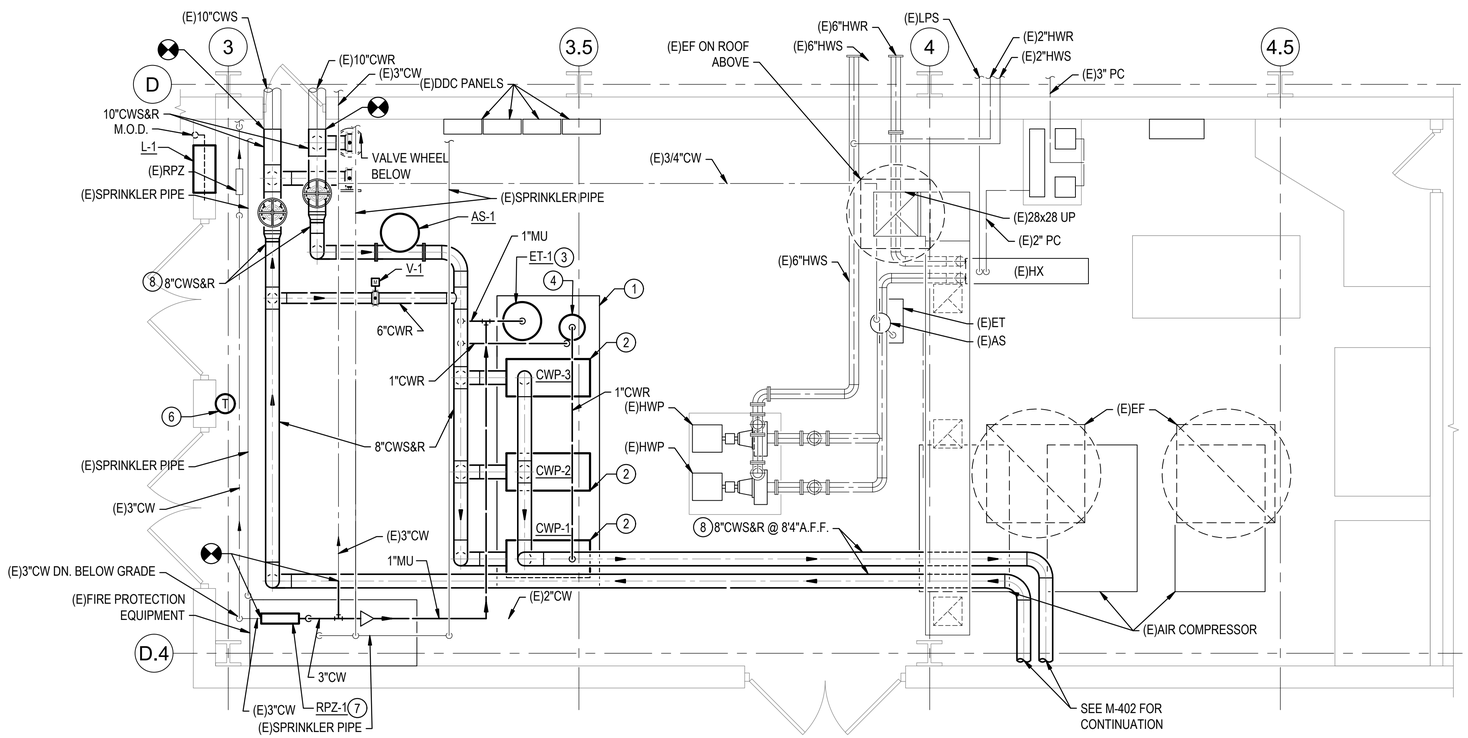

1 MECHANICAL ROOM PLAN

1/4"=1'-0"

0 4' 8'

N

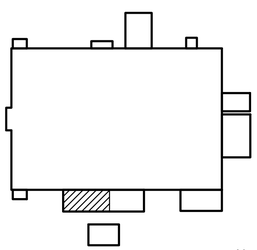

KEY PLAN

N.T.S.

N

CYM	DESCRIPTION	DATE	APPR

NAVFAC

NORTH CAROLINA PROFESSIONAL SEAL 039797 ENGINEER ROBERT A. POINTER

05/04/2026

SUMMER CONSULTANTS INCORPORATED

4325 Lake Boone Trail|Suite 301|Raleigh, NC 27607
(984) 204-4500 | www.summerconsultants.com

FOR COMMANDER NAVFAC
ACTIVITY
SATISFACTORY TO DATE

DES	ZAC	DRW	ZAC	CHK	WAN

<<PM/DM>> NICHOLAS A. HALL
BRANCH MANAGER PATRICK FAULKNER
CHIEF ENG/ARCH
<<XXX>>

DEPARTMENT OF THE NAVY
NAVAL FACILITIES ENGINEERING SYSTEMS COMMAND
FACILITIES ENGINEERING & ACQUISITIONS DIVISION

NAVAL FACILITIES ENGINEERING SYSTEMS COMMAND - MID-ATLANTIC
MCAS CHERRY POINT - CHERRY POINT, NC

MCAS CHERRY POINT, NC
CHERRY POINT, NC

REPLACE CHILLERS & COOLING TOWER
BUILDING 4225

MECHANICAL ROOM PLAN

SCALE: AS NOTED
EPROJECT NO.: 7440851
CONSTR. CONTR. NO.
NAVFAC DRAWING NO. XXXXXX
SHEET XX OF 39

M-401

FILE NAME: 231.007 M-401.DWG
OUR REF: 231.007
PLOT DATE: 4/30/2026 2:21:44 PM

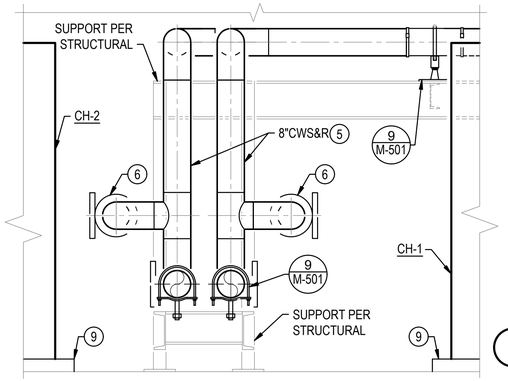

SECTION 1 CHILLED WATER PIPING

1/2"=1'-0"

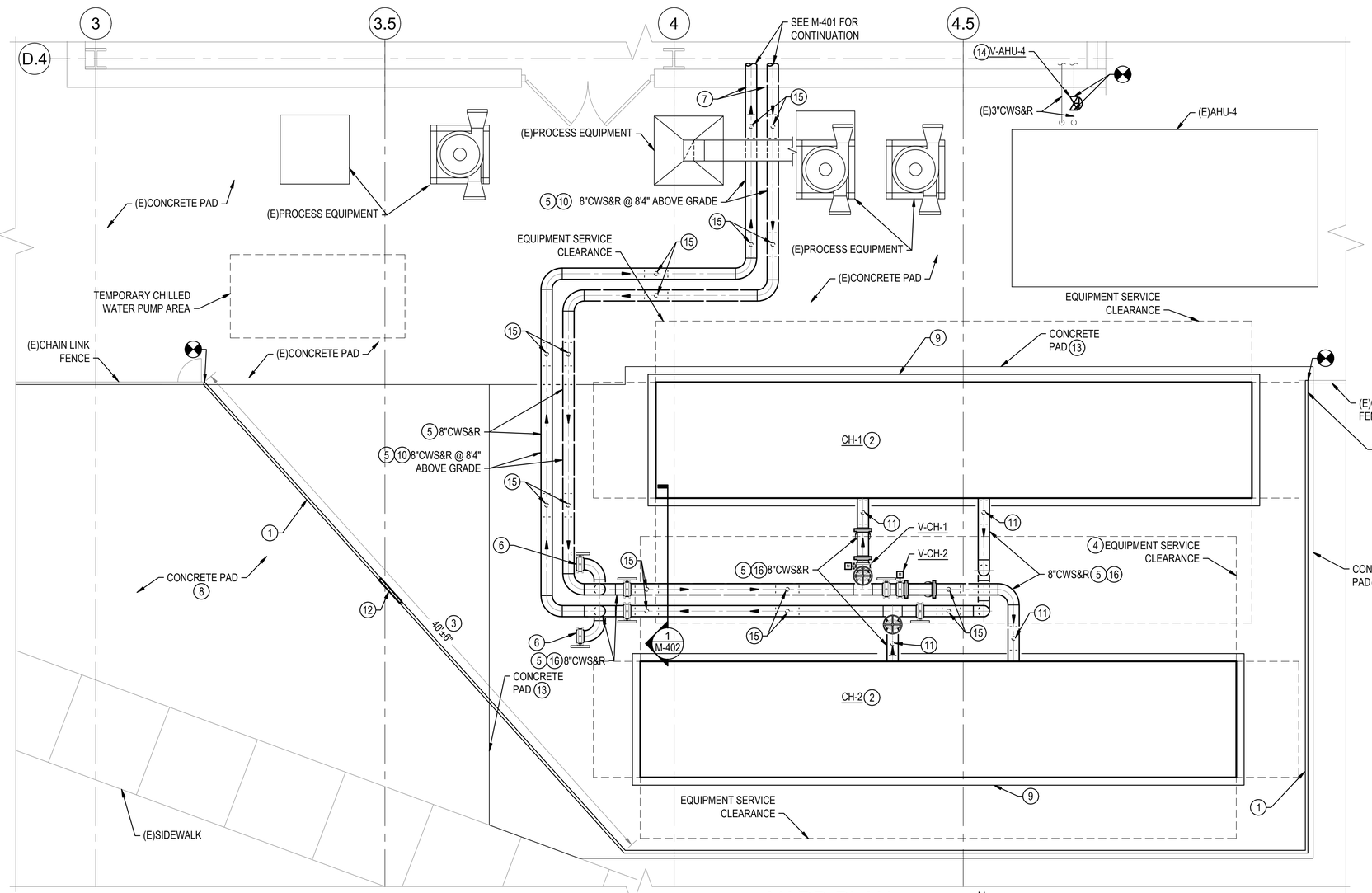

2 YARD PLAN

1/4"=1'-0"

GENERAL NOTES

G1. ALL WORK MUST BE NEW AND PROVIDED UNDER THIS CONTRACT UNLESS SPECIFICALLY MARKED "EXISTING", "EXIST.", OR "(E)".

G2. VERIFY LOCATION AND DIMENSIONS OF EXISTING EQUIPMENT AND COORDINATE ALL WORK PRIOR TO THE START OF CONSTRUCTION.

NOTES

1. PROVIDE NEW FENCE PER CIVIL DRAWINGS.
2. PROVIDE AIR COOLED CHILLER PER DETAIL 1/M-501.
3. VERIFY MEASUREMENT IN FIELD.
4. PROVIDE 8' SERVICE CLEARANCE BETWEEN CHILLERS FOR COIL ACCESS.
5. PROVIDE EXTERIOR PIPING WITH HEAT TRACING PER DETAIL 7/M-501.
6. PERMANENTLY MOUNTED 8" TEMPORARY CHILLER CONNECTIONS.
7. PROVIDE EXTERIOR WALL PIPING PENETRATION PER DETAIL 8/M-501.
8. AFTER TEMPORARY CHILLER HAS BEEN DE-MOBILIZED, PROVIDE CONCRETE PAD FOR TEMPORARY CHILLER LAYDOWN AREA. PAD MUST FLUSH TO GRADE. SEE STRUCTURAL DRAWINGS FOR MORE DETAILS.
9. PROVIDE EQUIPMENT PAD 6" BEYOND THE EXTENTS OF EQUIPMENT ON ALL SIDES PER STRUCTURAL DETAIL.
10. HEIGHT IS FROM BOTTOM OF PIPE INSULATION.
11. PROVIDE SUPPORT FOR PIPING PER DETAILS B4/S-102 & 3/M-501. COORDINATE EXACT PIPE CONNECTION LOCATIONS WITH MANUFACTURER.
12. PROVIDE 2'x2' LOCKABLE ACCESS PANEL IN CHAIN LINK FENCE PER CIVIL DETAIL.
13. PROVIDE CONCRETE PAD FLUSH TO GRADE. SEE STRUCTURAL DRAWINGS FOR MORE DETAILS.
14. OVER A WEEKEND OUTAGE, REMOVE EXISTING THREE-WAY CONTROL VALVE AND ASSOCIATED BYPASS PIPING AND PROVIDE TWO WAY CONTROL VALVE. BALANCE NEW VALVE PER SCHEDULE ON M-601.
15. PROVIDE SUPPORT FOR EXTERIOR PIPING PER DETAIL 9/M-501.
16. COORDINATE PIPE HEIGHT WITH CHILLER CONNECTIONS.

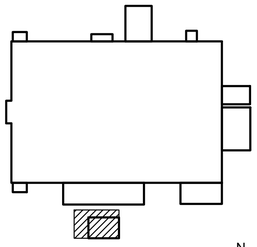

KEY PLAN
N.T.S.

SYM	DESCRIPTION	DATE	APPR

NAVFAC

NORTH CAROLINA PROFESSIONAL SEAL 039797 ENGINEER ROBERT A. POINTER
05/04/2026

SUMMER CONSULTANTS INCORPORATED
4325 Lake Boone Trail|Suite 301|Raleigh, NC 27607
(984) 204-4500 | www.summerconsultants.com

FOR COMMANDER NAVFAC
ACTIVITY
SATISFACTORY TO DATE

DES	ZAC	DRW	ZAC	CHK	WAN

<<PM/DM>> NICHOLAS A. HALL
BRANCH MANAGER PATRICK FAULKNER
CHIEF ENG/ARCH
<<XXX>>

DEPARTMENT OF THE NAVY
NAVAL FACILITIES ENGINEERING SYSTEMS COMMAND
FACILITIES ENGINEERING & ACQUISITIONS DIVISION
MCAS CHERRY POINT, NC

NAVAL FACILITIES ENGINEERING SYSTEMS COMMAND - MID-ATLANTIC
MCAS CHERRY POINT - CHERRY POINT, NC

CHERRY POINT, NC
REPLACE CHILLERS & COOLING TOWER
BUILDING 4225
YARD PLAN

SCALE: AS NOTED
EPROJECT NO.: 7440851
CONSTR. CONTR. NO.
NAVFAC DRAWING NO. 12939362
SHEET 18 OF 39
M-402

FILE NAME: 231.007 M-402.DWG
OUR REF: 231.007
PLOT DATE: 4/30/2026 2:21:51 PM

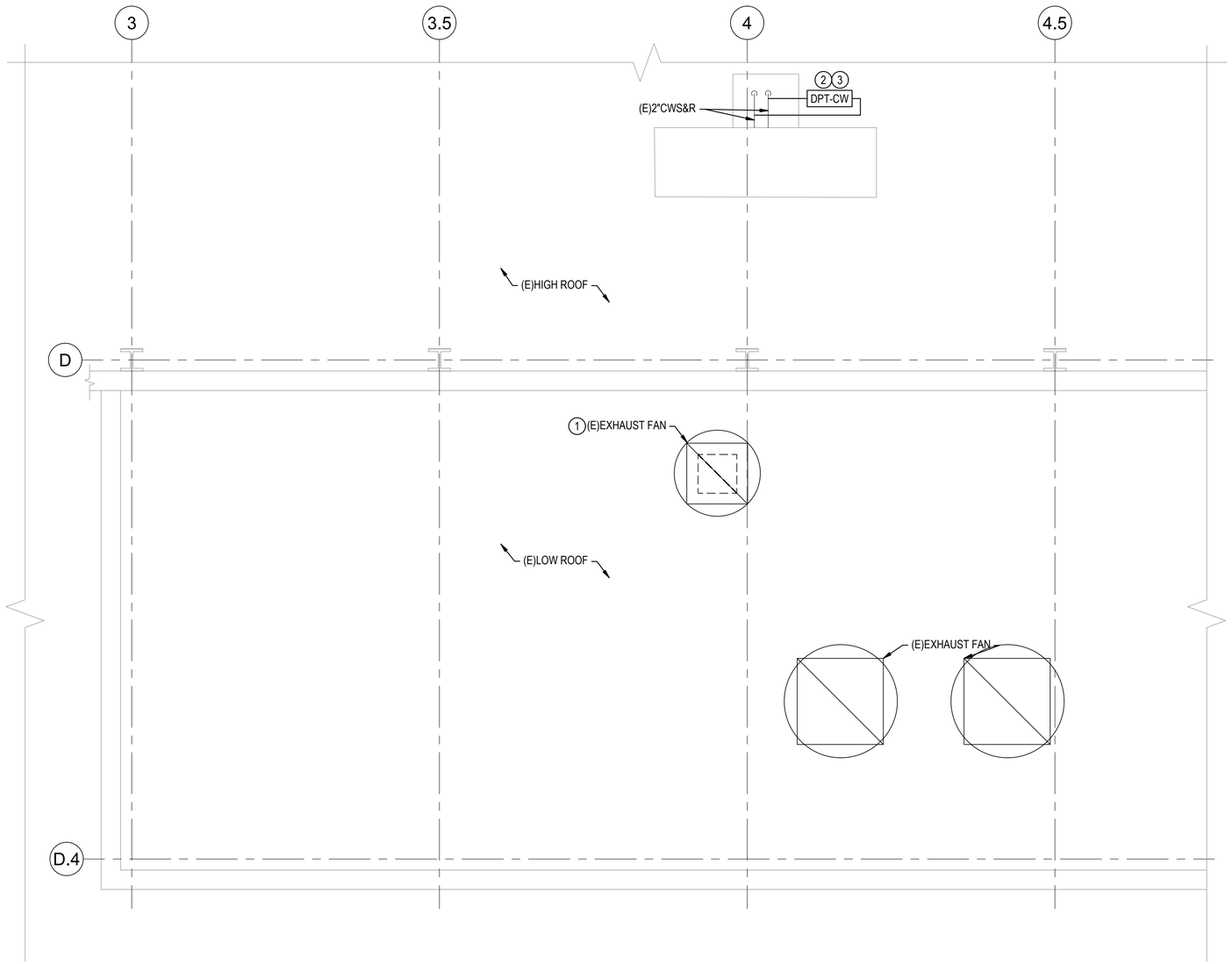

1 ROOF PLAN
1/4"=1'-0"
0 4' 8'
N

GENERAL NOTES

G1. ALL WORK MUST BE NEW AND PROVIDED UNDER THIS CONTRACT UNLESS SPECIFICALLY MARKED "EXISTING", "EXIST.", OR "(E)".

G2. VERIFY LOCATION AND DIMENSIONS OF EXISTING EQUIPMENT AND COORDINATE ALL WORK PRIOR TO THE START OF CONSTRUCTION.

NOTES

1. PROVIDE NEW CONTROLS SEQUENCE FOR (E)EXHAUST FAN PER M-703.
2. DETERMINE DIFFERENTIAL PRESSURE SETPOINT TO MAINTAIN ADEQUATE FLOW THROUGH THE CHILLED WATER PIPING SYSTEM.
3. LOCATE DPT-CW IN PIPING ENCLOSURE ON ROOF FOR EXISTING ROOF TOP UNIT 1. SEE M-702 FOR MORE INFORMATION.

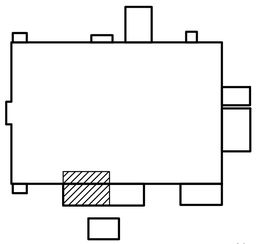

KEY PLAN
N.T.S.
N

SYM	DESCRIPTION	DATE	APPR

NAVFAC

NORTH CAROLINA PROFESSIONAL SEAL 039797 ENGINEER ROBERT A. POINTER
05/04/2026

SUMMER CONSULTANTS INCORPORATED
4325 Lake Boone Trail|Suite 301|Raleigh, NC 27607
(984) 204-4500 | www.summerconsultants.com

FOR COMMANDER NAVFAC
ACTIVITY
SATISFACTORY TO DATE
DES ZAC DRW ZAC CHK WAN
<<PM/DM>> NICHOLAS A. HALL
BRANCH MANAGER PATRICK FAULKNER
CHIEF ENG/ARCH
<<XXX>>

DEPARTMENT OF THE NAVY
NAVAL FACILITIES ENGINEERING SYSTEMS COMMAND
FACILITIES ENGINEERING & ACQUISITIONS DIVISION
NAVAL FACILITIES ENGINEERING SYSTEMS COMMAND - MID-ATLANTIC
MCAS CHERRY POINT - CHERRY POINT, NC
MCAS CHERRY POINT, NC
CHERRY POINT, NC
REPLACE CHILLERS & COOLING TOWER
BUILDING 4225
ROOF PLAN

SCALE: AS NOTED
EPROJECT NO.: 7440851
CONSTR. CONTR. NO.
NAVFAC DRAWING NO. 12939363
SHEET 19 OF 39
M-403

FILE NAME: 231.007 M-403.DWG
OUR REF: 231.007
PLOT DATE: 4/30/2026 2:21:59 PM

HEAT TRACE CABLE SIZING CHART	
PIPE SIZE	MIN. WATTS PER FOOT
4" OR LESS	5
6"	8
8"	2 STRIPS @ 5 WATTS PER FT.

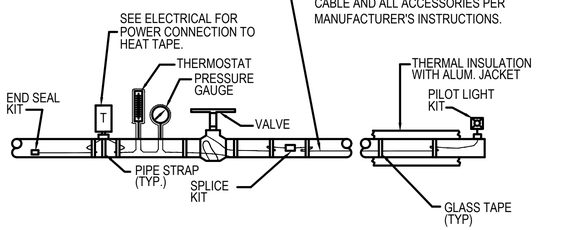

NOTES:
1. PROVIDE A TEE KIT WHEN CONNECTING THREE LENGTHS OF HEAT TRACE CABLE TOGETHER.
2. PROVIDE HEAT TRACE CABLE ON ALL DEVICES PER UNIT MANUFACTURER. RECOMMENDATIONS. THIS INCLUDES BUT IS NOT LIMITED TO PUMPS, TEES, ELBOWS, AND SUPPORTS.

DETAIL HEAT TRACE
7 M-402 NO SCALE

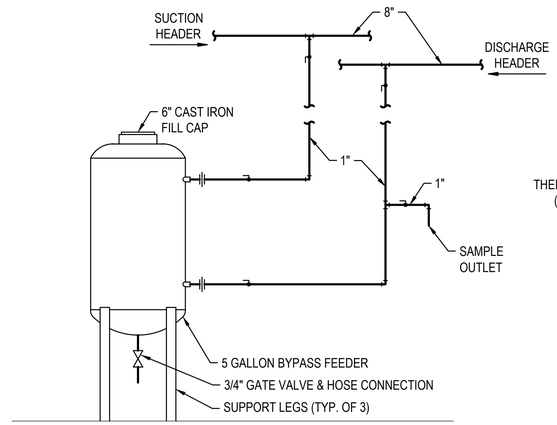

DETAIL CHEMICAL FEEDER
4 M-401 NO SCALE

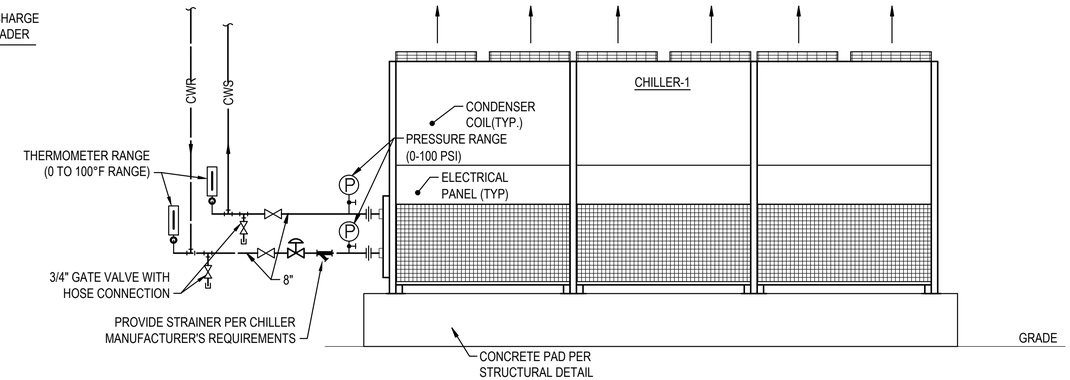

DETAIL AIR-COOLED CHILLER PIPING
1 M-402 NO SCALE

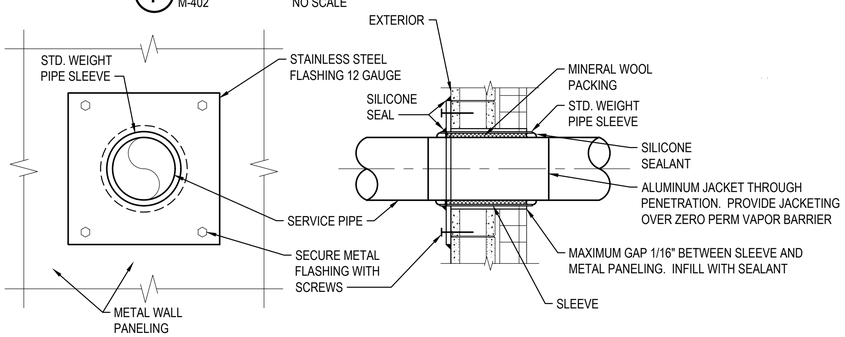

DETAIL EXTERIOR WALL PENETRATION
8 NO SCALE

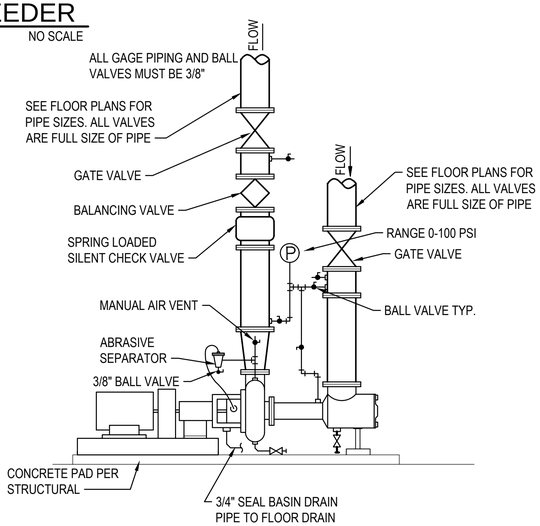

DETAIL END SUCTION PUMP
5 M-401 NO SCALE

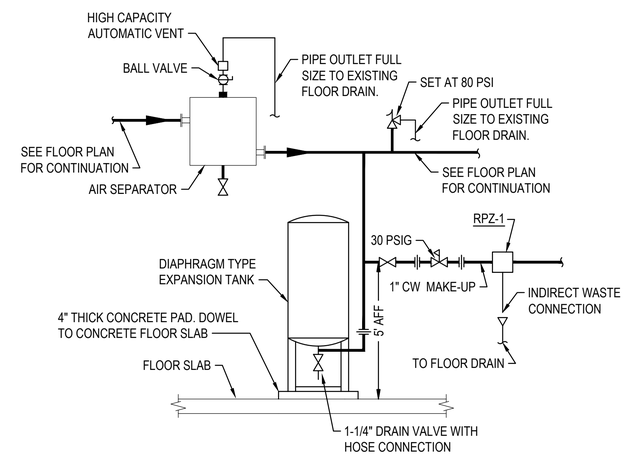

DETAIL EXPANSION TANK
2 M-401 NO SCALE

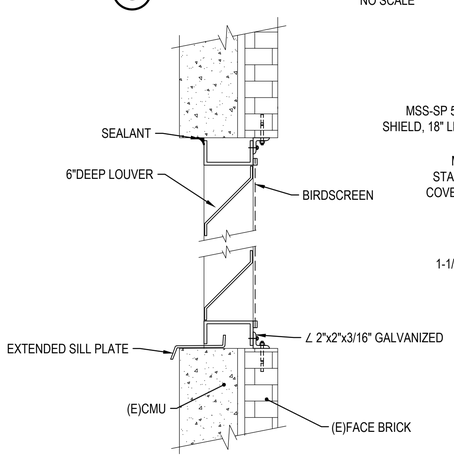

DETAIL L-1 INSTALLATION
10 M-401 NO SCALE

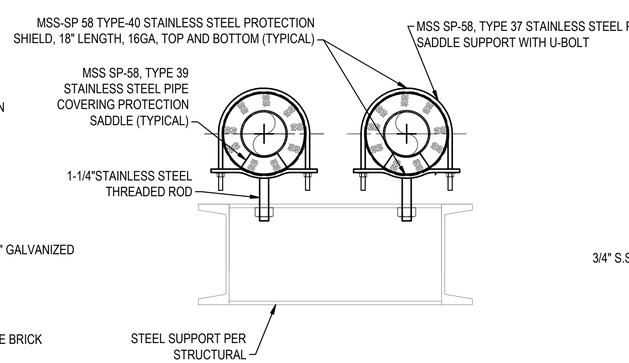

DETAIL PIPE SUPPORT
9 NO SCALE

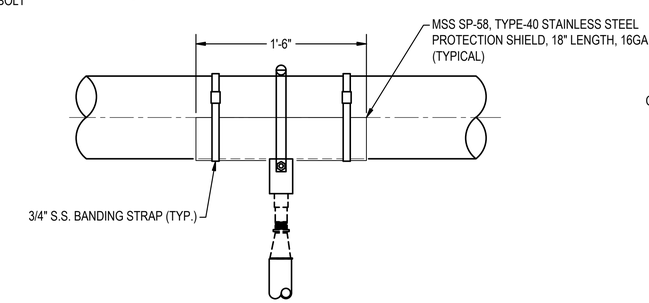

SECTION PIPE SUPPORT
6 NO SCALE

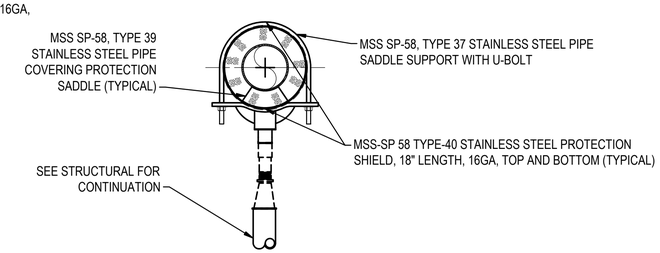

DETAIL PIPE SUPPORT
3 NO SCALE

APPR	DATE	DESCRIPTION	CTM

NAVFAC

NORTH CAROLINA PROFESSIONAL SEAL 039797 ENGINEER ROBERT A. POINTER
05/04/2026

SUMMER CONSULTANTS INCORPORATED
4325 Lake Boone Trail|Suite 301|Raleigh, NC 27607
(984) 204-4500 | www.summerconsultants.com

FOR COMMANDER NAVFAC
ACTIVITY
SATISFACTORY TO DATE
DES ZAC DRW ZAC CHK WAN
<<PM/DM>> NICHOLAS A. HALL
BRANCH MANAGER PATRICK FAULKNER
CHIEF ENGIARCH
<<XXX>>

DEPARTMENT OF THE NAVY
NAVAL FACILITIES ENGINEERING SYSTEMS COMMAND
FACILITIES ENGINEERING & ACQUISITIONS DIVISION
NAVAL FACILITIES ENGINEERING SYSTEMS COMMAND - MID-ATLANTIC
MCAS CHERRY POINT - CHERRY POINT, NC
MCAS CHERRY POINT, NC
CHERRY POINT, NC
REPLACE CHILLERS & COOLING TOWER
BUILDING 4225
DETAILS

SCALE: AS NOTED
EPROJECT NO.: 7440851
CONSTR. CONTR. NO.
NAVFAC DRAWING NO. 12939364
SHEET 20 OF 39
M-501

FILE NAME: 231.007 M-501.DWG
OUR REF: 231.007
PLOT DATE: 4/30/2026 4:45:55 PM

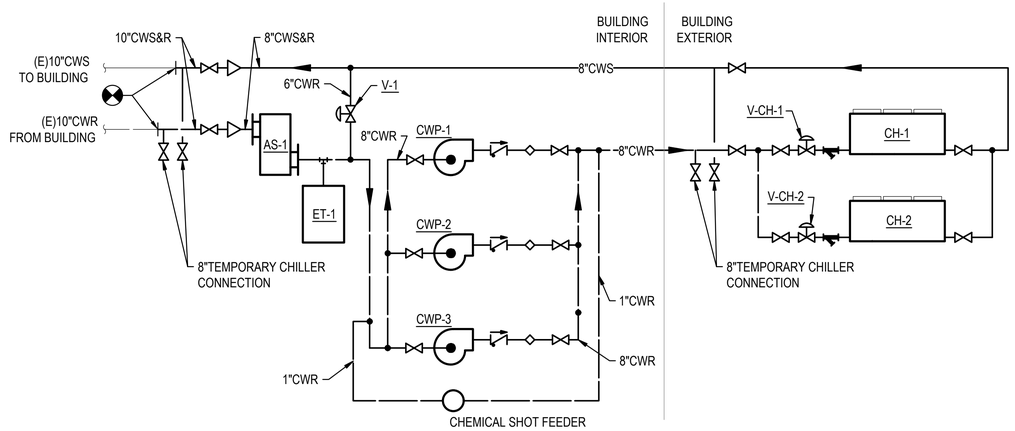

1 SYSTEM SCHEMATIC
NO SCALE

AIR-COOLED CHILLER SCHEDULE [A E I J K]

UNIT NO.	FLUID	GPM	NOMINAL CAPACITY (TONS)	FULL LOAD (TONS)	MIN LOAD CAPACITY (%)	E.W.T (°F)	L.W.T (°F)	MAX P.D. (FT. W.G.)	FOULING FACTOR	ELECTRICAL DATA (460V/3ϕ/60HZ) [F G H] NO. OF COMP.	TOTAL COMP. POWER (KW)	NO. COND. FANS	FAN FLA (EACH)	MCA	MAX DIMENSIONS (LxWxH)	NOTES
CH-1,2	CHILLED WATER	655	300	290.5	17%	55	44	17.5	0.0001	2	318	18	3.3	600	458"x88"x100"	[B C]

NOTES

A. PROVIDE ROTARY SCREW CHILLER. INSTALL PER DETAIL 1/M-501.

B. DESIGN OUTSIDE AMBIENT TEMPERATURE IS 95°F

C. PROVIDE SINGLE POINT OF CONNECTION, INTEGRAL NON-FUSED SWITCH.

D. AT AHRI STANDARD CONDITIONS, MINIMUM EFFICIENCY: 10.964 EER, 14 IPLV OR 9.7 EER, 17.13 IPLV.

E. PROVIDE WITH VARIABLE SPEED COMPRESSORS.

F. ALTERNATE OPTION: 3 COMPRESSORS TOTALING 320 KW.

G. ALTERNATE OPTION: 16 FANS TOTALING 22 KW.

H. ALTERNATE OPTION: 20 FANS TOTALING 26 KW.

I. PROVIDE HEAT TRACING ON CHILLER COMPONENTS PER MANUFACTURER'S RECOMMENDATIONS.

J. COORDINATE ELECTICAL REQUIREMENTS OF SELECTED CHILLER WITH THE ELECTRICAL CONTRACTOR.

K. PROVIDE WEATHERPROOF GFI RATED SERVICE RECEPTACLES.

[B] PUMP SCHEDULE

UNIT NO.	TYPE [A]	FLUID	GPM	HEAD (FT.)	RPM	EFF. (%)	BHP MAX.	MOTOR HP	ELEC. DATA (V/PH/HZ)	SERVICE	LOCATION	NOTES
CWP-1,2,3	ES	WATER	655	81	1760	80	16.7	20	460/3/60	CHILLED WATER	MER	[C D]

NOTES

A. ES = END SUCTION, BASE MOUNTED.

B. PROVIDE WITH FLANGED CONNECTIONS.

C. PROVIDE PREMIUM EFFICIENCY MOTOR AND VARIABLE FREQUENCY DRIVE.

D. INSTALL PER DETAIL 5/M-501.

LOUVER SCHEDULE [A]

UNIT NO.	DESCRIPTION	FACE SIZE WxH (IN)	FREE AREA (FT^2)	AIRFLOW (CFM)	MAX P.D (IN. W.G)
L-1	(E)EXHAUST FAN MAKEUP	30x36	3.9	2000	0.05

NOTES

A. ALL DEVICES SHALL BE EXTRUDED ALUMINUM CONSTRUCTION UNLESS OTHERWISE NOTED.

CONTROL VALVE SCHEDULE

UNIT NO.	VALVE NO.	SERVICE	TYPE	SIZE (IN.)	FLOW (GPM)	CV	MAX P.D. (FT. W.G.)	NOTES
CH-1	V-CH-1	CHILLED WATER	2 WAY	8	655	315	10	
CH-2	V-CH-2	CHILLED WATER	2 WAY	8	655	315	10	
CH-1,2	V-1	CHILLED WATER	BYPASS	6	340	155	10	
(E)AHU-1	V-AHU-1	CHILLED WATER	2 WAY	1.5	10.5	5	10	
(E)AHU-4	V-AHU-4	CHILLED WATER	2 WAY	3	88.2	42	10	
(E)RTU-5	V-RTU-5	CHILLED WATER	2 WAY	1	4.3	2	10	
(E)RTU-10	V-RTU-10	CHILLED WATER	2 WAY	1.5	20.6	10	10	

NOTES

BACKFLOW PREVENTER SCHEDULE

DESIG.	GPM	HEAD (PSI)	SIZE (IN)	SERVICE	LOCATION	BASIS OF DESIGN	REMARKS
RPZ-1	125	10	3	CHILLED & HEATING WATER	MER	WATTS 909	[A B]

NOTES:

A. TYPE: REDUCED PRESSURE ASSEMBLY

B. PROVIDE IN ACCORDANCE WITH MANUFACTURER'S RECOMMENDATIONS.

AIR SEPARATOR

UNIT NO.	GPM	MAX P.D. (FT. W.G.)	SERVICE	LOCATION	NOTES
AS-1	655	2	CHILLED WATER	MER	[A]

NOTES

A. INSTALL PER DETAIL 2/M-501.

TEMPORARY COOLING FACILITES:

GOVERNMENT PROVIDED TEMPORARY CHILLER: CARRIER AQUAFORCE 30XV250M:
COOLING CAPACITY: 250 TONS
FLOW RATE: 500 GPM
ELECTRICAL: 460V/3PH/60HZ

PROVIDE 20 HP SKID MOUNTED PUMP SIZED FOR 500 GPM AT 81 FEET OF HEAD.

ELECTRICAL REQUIREMENTS:
PROVIDE TEMPORARY 250 TON CHILLER AND TEMPORARY CHILLER PUMP 20HP EACH WITH SINGLE-POINT CONNECTION TO NEW DISCONNECTS. PROVIDE ALL REQUIRED CABLING FOR TEMPORARY CHILLER AND PUMP CONNECTION. FOR TEMPORARY CHILLER CONNECT TO NEW DISCONNECT ON EXTERIOR OF BUILDING LABELED "TEMPORARY CHILLER 250 TON FSS". BREAKER IS LOCATED IN SWBD-1, CIRCUIT #9 AND SIZED FOR 600AMPS AT 480V. FOR TEMPORARY CHILLER PUMP CONNECT TO NEW DISCONNECT ON EXTERIOR OF BUILDING LABELED "TEMPORARY CHILLER PUMP 20HP FSS". BREAKER IS LOCATED IN
PP2-1, CIRCUIT #8 AND SIZED FOR 60AMPS AT 480V. SEE ELECTRICAL DRAWINGS FOR DETAILS.

EXPANSION TANK SCHEDULE

UNIT NO.	TANK VOL. (GAL.)	ACCEPT. VOL. (GAL.)	INITIAL CHARGE (PSIG)	TANK SIZE DIA. x H (IN.)	SERVICE	LOCATION	NOTES
ET-1	60	10	30	24x49	CHILLED WATER	MER	[A]

NOTES

A. INSTALL PER DETAIL 2/M-501.

NUM	DESCRIPTION	DATE	APPR

NAVFAC

NORTH CAROLINA PROFESSIONAL SEAL 039797 ENGINEER ROBERT A. POINTER
05/04/2026

SUMMER CONSULTANTS INCORPORATED
4325 Lake Boone Trail|Suite 301|Raleigh, NC 27607
(984) 204-4500 | www.summerconsultants.com

FOR COMMANDER NAVFAC
ACTIVITY
SATISFACTORY TO DATE
DES ZAC DRW ZAC CHK WAN
<<PMDM>> NICHOLAS A. HALL
BRANCH MANAGER PATRICK FAULKNER
CHIEF ENG/ARCH
<<XXX>>

DEPARTMENT OF THE NAVY
NAVAL FACILITIES ENGINEERING SYSTEMS COMMAND
FACILITIES ENGINEERING & ACQUISITIONS DIVISION

NAVAL FACILITIES ENGINEERING SYSTEMS COMMAND - MID-ATLANTIC
MCAS CHERRY POINT - CHERRY POINT, NC

CHERRY POINT, NC
REPLACE CHILLERS & COOLING TOWER
BUILDING 4225

SCHEDULES

SCALE: AS NOTED
EPROJECT NO.: 7440851
CONSTR. CONTR. NO.
NAVFAC DRAWING NO.
12939365
SHEET 21 OF 39
M-601

FILE NAME: 231.007 M-601.DWG
OUR REF: 231.007
PLOT DATE: 4/30/2026 2:22:14 PM

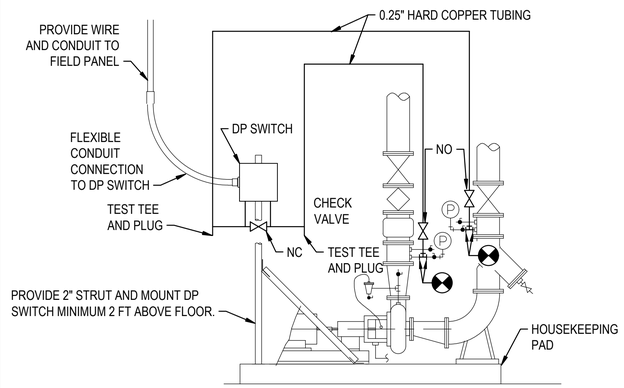

DETAIL - WATER DIFFERENTIAL PRESSURE DEVICE

1 M-701

NO SCALE

SYMBOLS & ABBREVIATIONS

DP-#	AIR OR WATER DIFFERENTIAL PRESSURE SWITCH, BY APPLICATION. PROVIDE AIR SWITCH PER DETAIL 4/M-701/M-701. PROVIDE WATER SWITCH PER DETAIL 2M-701.
G	DIFFERENTIAL PRESSURE GAUGE, CONNECT TO STATIC PRESSURE TAPS IN ACCORDANCE WITH DETAIL 3/M-701/M-701.
DPT-#	WATER DIFFERENTIAL PRESSURE TRANSMITTER, BY APPLICATION. PROVIDE WATER TRANSMITTER PER DETAIL 2/M-701.
TS-#	PIPE MOUNTED INSERTION TYPE ELECTRONIC TEMPERATURE SENSOR WITH WELL.
RS-#	WALL-MOUNTED ELECTRONIC TEMPERATURE SENSOR
CS-#	CURRENT SWITCH
ES-#	END SWITCH
	BINARY INPUT OR OUTPUT POINT
	ANALOG INPUT OR OUTPUT POINT
	NETWORK CONNECTION
	THERMOMETER.
	BUTTERFLY VALVE.

GENERAL REQUIREMENTS

1. PROVIDE THE FOLLOWING AUTOMATIC ALARM AT OWS EVERY MARCH 1ST AND SEPTEMBER 1ST: "IN CONFORMANCE WITH THE UFCs AND IN ORDER TO SAVE ENERGY, BUILDING SENSORS MUST BE CALIBRATED AND CLEANED AT REGULAR INTERVALS.

SYMBOLS & ABREVIATIONS

AI	ANALOG INPUT
AO	ANALOG OUTPUT
BI	BINARY INPUT
BO	BINARY OUTPUT
CLG	COOLING
COV	CHANGE OF VALUE
CS	CURRENT SWITCH
Cx	COMMISSIONING
EF	EXHAUST FAN
HTG	HEATING
I/O	INPUT/OUTPUT
NVI	NETWORK VARIABLE INPUT
NVO	NETWORK VARIABLE OUTPUT
SP	SETPOINT
H O A	HAND-OFF-AUTO SWITCH
	MOTOR
	NORMALLY OPEN CONTACTS
	NORMALLY CLOSED CONTACTS
R#	RELAY COIL
M	STARTER HOLDING COIL
	THERMAL MOTOR SWITCH
	PNEUMATIC TUBING
	EXISTING PNEUMATIC TUBING
	MOTOR STARTER
C EP# NC NO	ELECTRIC TO PNEUMATIC SOLENOID VALVE MOUNTED IN INSTRUMENTATION PANEL, COIL VOLTAGES AS INDICATED ON WIRING DIAGRAMS.
	FLOW METER (TURBINE-STYLE)
	FAN OR PUMP, BY APPLICATION
EHO	EMERGENCY HVAC OFF (SYSTEM VARIABLE)
VFD-#	VARIABLE FREQUENCY DRIVE
D-#	OPPOSED BLADE DAMPER.
D-#	PARALLEL BLADE DAMPER.
A-#	DAMPER OR VALVE ACTUATOR.
V-#	2 WAY CONTROL VALVE (BALL OR GLOBE AS SPECIFIED).
	HYDRONIC PIPING
	WATER FLOW PATH

SYM	DESCRIPTION	DATE	APPR

NAVFAC

NORTH CAROLINA PROFESSIONAL SEAL 039797 ENGINEER ROBERT A. POINTER

05/04/2026

SUMMER CONSULTANTS INCORPORATED
4325 Lake Boone Trail|Suite 301|Raleigh, NC 27607
(984) 204-4500 | www.summerconsultants.com

FOR COMMANDER NAVFAC
ACTIVITY
SATISFACTORY TO DATE

DES ZAC	DRW ZAC	CHK WAN

<<PMDM>> NICHOLAS A. HALL
BRANCH MANAGER PATRICK FAULKNER
CHIEF ENG/ARCH
<<XXX>>

DEPARTMENT OF THE NAVY
NAVAL FACILITIES ENGINEERING SYSTEMS COMMAND
FACILITIES ENGINEERING & ACQUISITIONS DIVISION
NAVAL FACILITIES ENGINEERING SYSTEMS COMMAND - MID-ATLANTIC
MCAS CHERRY POINT - CHERRY POINT, NC

MCAS CHERRY POINT, NC
CHERRY POINT, NC
REPLACE CHILLERS & COOLING TOWER
BUILDING 4225

CONTROLS COVER

SCALE: AS NOTED
EPROJECT NO.: 7440851
CONSTR. CONTR. NO.
NAVFAC DRAWING NO. 12939366
SHEET 22 OF 39

M-701

FILE NAME: 231.001 M-701.DWG
OUR REF: 231.007
PLOT DATE: 4/30/2026 2:22:21 PM

DESIGN INTENT
THE CHILLED WATER SYSTEM IS AN AIR-COOLED CHILLER PLANT WITH VARIABLE PRIMARY PUMPING SYSTEM. THE CHILLERS ARE IN A LEAD-LAG OPERATION AND PUMPS HAVE N+1 REDUNDANCY.

THE CHILLED WATER PLANT SERVES THE BUILDING HVAC EQUIPMENT. THE HVAC SYSTEM CONSISTS OF MULTIPLE ROOFTOP AIR HANDLER UNITS AND AIR HANDLER UNITS 2-WAY COOLING COILS.

GENERAL
IF REQUIRED BY THE CHILLER MANUFACTURER'S WRITTEN INSTRUCTIONS, PROVIDE DIFFERENTIAL PRESSURE TRANSMITTER DPT-X. WHEN THE PRESSURE DROP ACROSS THE CHILLER MEETS THE PRESSURE DROP ASSOCIATED WITH THE CHILLER MANUFACTURER'S REQUIRED MINIMUM FLOW THE CHILLER WILL BE ENABLED TO START.

UPON PROOF OF FLOW IN ACCORDANCE WITH CHILLER MANUFACTURER'S WRITTEN INSTRUCTIONS, THE SELF CONTAINED CHILLER CONTROLS WILL START AND MODULATE THE CHILLER CAPACITY TO MAINTAIN SETPOINT.

DISPLAY BTUM-1 TONNAGE, CHILLED WATER FLOW RATE (GPM), AND TEMPERATURES ON GRAPHIC.

RECORD INSTANTANEOUS TOTAL PLANT POWER (KW), PLANT PRODUCTION (TONS) AND CHILLED WATER FLOW (GPM) EVERY 5 MINUTES. INSTANTANEOUS TOTAL PLANT POWER (KW) IS THE SUM OF THE TOTAL KW FROM OPERATING CHILLERS, AND CHILLED WATER PUMPS. CHILLED WATER PUMP KW IS BASED UPON MEASURED CURRENT FROM TAB REPORT.

MONTHLY PRODUCTION REPORT: FOR A SPECIFIED 24 MONTH PERIOD, BY MONTH, DISPLAY: TOTAL GALLONS, TOTAL TON-HOURS, TOTAL KWH, AVERAGE KW/TON, AVERAGE GPM, AND AVERAGE OUTSIDE AIR TEMPERATURE. PROVIDE A BUTTON ON THE GRAPHICS TO GENERATE AND VIEW THE REPORT.

HOURLY PRODUCTION REPORT: FOR A SPECIFIED 24 HOUR PERIOD, BY HOUR, DISPLAY: TOTAL GALLONS, TOTAL TON-HOURS, TOTAL KWH, AVERAGE KW/TON, AND AVERAGE GPM. PROVIDE A BUTTON ON THE GRAPHICS TO GENERATE AND VIEW THE REPORT.

CHILLER
CHILLED WATER SYSTEM START / STOP: THE CHILLED WATER SYSTEM WILL BE ENABLED TO START AND STOP BY THE BAS. THERE IS NO TIME DELAY DURING OPTIMUM START AND OPTIMUM STOP.

ON A CALL FOR THE CHILLED WATER SYSTEM TO START, OPEN LEAD CHILLER VALVE V-CH-X. START LEAD CHILLED WATER PUMP AND ENABLE LEAD CHILLER.

ON COMMAND TO START A SECOND CHILLER, START ASSOCIATED PUMP AND OPEN CHILLER VALVE V-CH-X PRIOR TO ENABLING LAG CHILLER. UPON PROOF OF FLOW, ENABLE LAG CHILLER. ON COMMAND TO STOP THE SECOND, THE REVERSE WILL OCCUR.

THE OWS WILL COMMAND AN ADDITIONAL CHILLER ON WHEN CHILLED WATER SUPPLY TEMPERATURE AS SENSED BY TEMPERATURE TRANSMITTER TS-1 IS 1.5 DEGREES F ABOVE PLANT CHILLED WATER SETPOINT CONTINUOUSLY FOR 15 MINUTES, OR

THE OWS WILL COMMAND A CHILLER OFF WHEN ALL OF THE FOLLOWING OCCUR:

1. CHILLER CAPACITY IS NOT NEEDED: WHEN THE TOTAL ELECTRICAL DEMAND (SUM OF KW OR AMPERES) IS 90% OF A SINGLE CHILLER ELECTRICAL DEMAND, TURN OFF THE SECOND CHILLER.

2. IF THE MEASURED FLOW AT FMS-1 IS LESS THAN 590 GPM WHEN BOTH CHILLERS ARE RUNNING.

PROVIDE A ONE HOUR DELAY BETWEEN STARTING AND STOPPING OF CHILLERS.

WHEN THE FIRST CHILLED WATER PUMP IS AT MAXIMUM SPEED AND UPON A CONTINUED FALL IN DIFFERENTIAL PRESSURE AT DPT-CW BELOW SETPOINT, SEND ALARM TO OWS. THE SECOND PUMP WILL START UPON OPERATOR MANUAL APPROVAL AT OWS. UPON A FALL IN PUMP SPEED TO 75%, THE SECOND PUMP WILL STOP. PROVIDE A 15 MINUTE TIME DELAY BETWEEN PUMP STARTS AND STOPS. IF OPERATING, STOP LAG PUMP EACH NIGHT AT 2000 HOURS.

THE SELF-CONTAINED CHILLER CONTROLS WILL MODULATE THE CHILLER CAPACITY TO MAINTAIN PLANT CHILLED WATER SETPOINT.

ON A CALL FOR THE CHILLED WATER SYSTEM TO STOP, STOP ALL CHILLERS AND PUMPS AND RETURN ALL VALVES TO THE NORMAL POSITION.

LEAD/LAG SELECTION
THE SELECTION OF THE LEAD AND LAG CHILLED WATER PUMPS AND CHILLERS WILL BE MADE MANUALLY AT THE OWS. THE LEAD/LAG EQUIPMENT WILL ALTERNATE AUTOMATICALLY BASED ON EQUIPMENT ROTATION PARAGRAPH BELOW.

CHILLERS AND PUMPS INPUT AS "OUT OF SERVICE" WILL BE SKIPPED OVER IN THE STARTING AND STOPPING SEQUENCE.

EQUIPMENT ROTATION: AUTOMATICALLY ALTERNATE THE FOLLOWING TO EQUALIZE THE RUN TIMES, WITH A MINIMUM OF ONCE PER WEEK:
CHILLED WATER PUMPS CWP-1, CWP-2, AND CWP-3 AND CHILLER CH-1 AND CH-2

PUMPS
LEAD PUMP START/STOP: THE LEAD CHILLED WATER PUMP WILL BE STARTED BY THE BAS WHEN THE CHILLER IS ENABLED. THE PUMP WILL BE STOPPED WHEN THE CHILLER IS DISABLED.

PUMP SPEED: ON A FALL IN SYSTEM DIFFERENTIAL PRESSURE BELOW SETPOINT (INITIAL 40' W.G., SEE NOTE 1), AS SENSED BY DPT-CW, THE PUMP SPEED WILL INCREASE. ON A RISE IN PRESSURE THE REVERSE WILL OCCUR. CHILLED WATER BYPASS VALVE V-1 WILL BE MODULATED TO MAINTAIN A MINIMUM FLOW THROUGH THE OPERATING CHILLER AS MEASURED BY FLOW METER FMS-1. CONFIRM MINIMUM FLOW WITH MANUFACTURER. UPON ACTIVATION OF LAG CHILLER, VALVE V-1 SETPOINT WILL INCREMENT TO CUMULATIVE MINIMUM FLOW OF BOTH CHILLERS.

RESETS: WHEN THE MOST DEMANDING CHILLED WATER VALVE IS 85% OPEN OR LOWER FOR 5 MINUTES, CHILLED WATER DIFFERENTIAL PRESSURE SETPOINT WILL BE RESET LOWER, IN ACCORDANCE WITH ASHRAE 90.1. WHEN THE MOST DEMANDING VALVE IS 95% OPEN OR HIGHER FOR 5 MINUTES, THE REVERSE WILL OCCUR.

PUMP ROTATION: ON A FAILURE OF THE LEAD PUMP, THE LAG PUMP WILL BE STARTED AND AN ALARM INDICATED AT THE BAS.

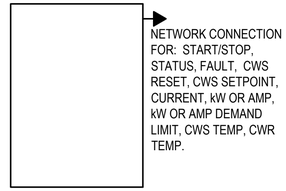

CHILLER CONTROL PANEL WIRING DIAGRAM

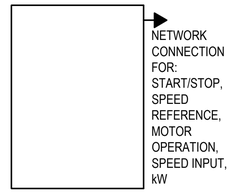

CWP-1,2,3 VFD WIRING DIAGRAM

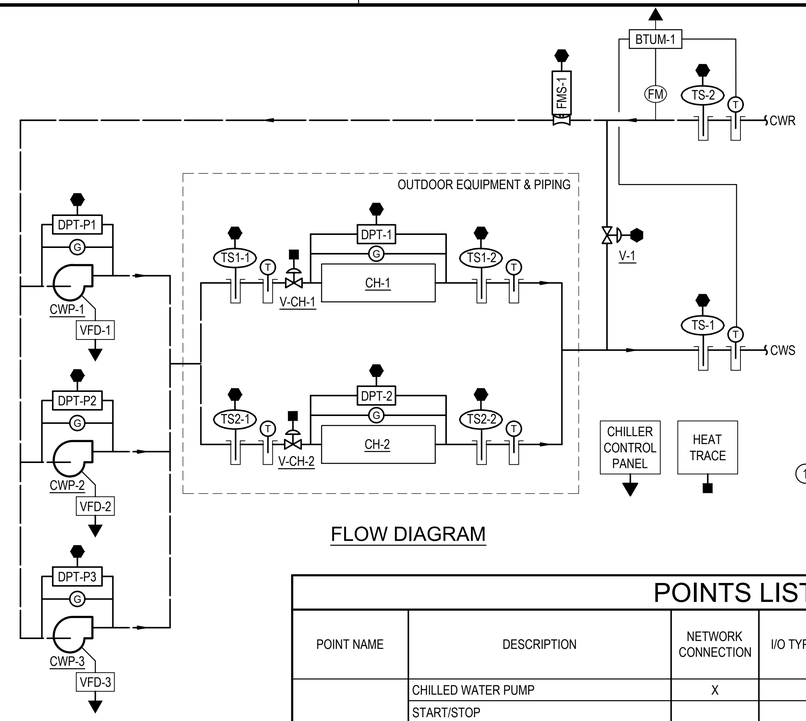

FLOW DIAGRAM

POWER FAILURE - AUTOMATIC RESTART
UPON RESTORATION OF POWER, DRIVE ALL VALVES TO NORMAL POSITIONS. THE BAS WILL AUTOMATICALLY RESTART LEAD CHILLER TO TIME OF DAY SCHEDULE. IF THE EQUIPMENT DOES NOT START, IMPLEMENT PROCEDURE FOR EQUIPMENT FAILURE. POWER INTERRUPTION RESETS/OVERRIDES THE CHILLER LOCKOUT TIMER.

PLANT OPERATION - EQUIPMENT FAILURE
IF ANY PIECE OF EQUIPMENT FAILS TO START FOR WHATEVER REASON, THE BAS WILL AUTOMATICALLY IMPLEMENT THE NORMAL SEQUENCE TO START THE LAG DEVICE.

SAFETIES:
IF ANY PIECE OF EQUIPMENT FAILS TO START FOR WHATEVER REASON, THE BAS WILL PROVIDE AN ALARM AT THE OWS.

FREEZE PROTECTION
IF BOTH CHILLERS ARE OFF, ENERGIZE BOTH CHILLED WATER PUMPS AT 36°F AMBIENT TEMPERATURE OR BELOW AND OPEN CHILLER VALVES. IF THERE IS NO CALL FOR COOLING AND AMBIENT TEMPERATURE RISES TO 38°F OR HIGHER, THE REVERSE WILL OCCUR.

IF ONE CHILLER IS ENERGIZED AND THE OTHER IS OFF, ENERGIZE LAG PRIMARY CHILLED WATER PUMP AT 36°F AMBIENT TEMPERATURE OR BELOW AND OPEN CHILLER VALVE FOR THE DE-ENERGIZED CHILLER. IF THERE IS NO CALL FOR COOLING AT THE DE-ENERGIZED CHILLER AND AMBIENT TEMPERATURE RISES TO 38°F OR HIGHER, THE REVERSE WILL OCCUR.

COMMISSIONING
ALL SETPOINTS, PERCENTAGES, TIME DELAYS, ETC. MUST BE ADJUSTABLE.

ALLOW THREE DAYS ON WEEKENDS FOR FINAL TESTING.

POINTS LIST [1]

POINT NAME	DESCRIPTION	NETWORK CONNECTION	I/O TYPE	ALARMS					TRENDING	
				FAIL	WARNING		LIMIT		Cx FREQUENCY	OPERATING FREQUENCY
					LOW	HIGH	LOW	HIGH		
VFD-1,2,3	CHILLED WATER PUMP	X								
	START/STOP								COV	COV
	SPEED REFERENCE								5min	15min
	MOTOR OPERATION			X					COV	COV
	VFD FAULT			X					COV	COV
	kW								5min	15min
CHILLER CONTROL PANEL	CHILLER	X								
	START/STOP								COV	COV
	INCREASE CAPACITY								COV	COV
	STABLE OPERATION								COV	COV
	STATUS								COV	COV
	FAULT			X					COV	COV
	CWS RESET								COV	COV
	CWS SETPOINT								COV	COV
	CURRENT								5min	15min
	kW OR AMP								5min	15min
	kW OR AMP DEMAND LIMIT								5min	15min
	CWS TEMP				40°F	54°F	38°F	58°F	5min	15min
	CWR TEMP					62°F		66°F	5min	15min
BTUM-1	BTU METER	X							COV	COV
	TEMPERATURE SENSOR SUPPLY								5min	15min
	TEMPERATURE SENSOR RETURN								5min	15min
	FLOW METER								5min	15min
	BTU								5min	15min
DPT-CW	CHILLED WATER DIFFERENTIAL PRESSURE		AI						5min	15min
DPT-PX	PUMP DIFFERENTIAL PRESSURE		AI						5min	15min
DPT-1,2	EVAPORATOR PRESSURE DROP		AI						5min	15min
FMS-1	FLOW MEASURING STATION		AI						5min	15min
TSX-1	CHILLER ENTERING TEMPERATURE		AI						5min	15min
TSX-2	CHILLER LEAVING TEMPERATURE		AI						5min	15min
TS-1	CHILLED WATER SUPPLY TEMP.		AI						5min	15min
TS-2	CHILLED WATER RETURN TEMP.		AI						5min	15min
V-1	CHILLED WATER BYPASS VALVE		AO						5min	15min
V-CH-X	CHILLER FLOW CONTROL VALVE		AO						5min	15min
HEAT TRACE	HEAT TRACE FAILURE		BI	X					COV	COV

[1] ALL POINTS INCLUDED ON LIST MUST BE SHOWN ON THE OWS GRAPHICS.

NOTES

1. DETERMINE DIFFERENTIAL PRESSURE SETPOINT TO MAINTAIN ADEQUATE FLOW THROUGH THE CHILLED WATER PIPING SYSTEM.
2. COORDINATE WITH AND IMPLEMENT SPECIFIC CHILLER MANUFACTURER WRITTEN REQUIREMENTS, INCLUDING BUT NOT LIMITED TO: HARDWARE CONNECTIONS FROM CHILLERS TO BAS TO START CHILLED WATER PUMPS AND OPEN ASSOCIATED VALVES V-CH-X & HARDWARE DIFFERENTIAL PRESSURE SWITCHES OR FLOW SWITCHES.
3. LOCATE DPT-CW IN PIPING ENCLOSURE ON ROOF FOR EXISTING ROOF TOP UNIT 1. SEE M-403 FOR EXACT LOCATION.

CHILLED WATER PLANT (2)

SYM	DESCRIPTION	DATE	APPR

NAVFAC

NORTH CAROLINA PROFESSIONAL SEAL 039797 ENGINEER ROBERT A. POINTER
05/04/2026

SUMMER CONSULTANTS INCORPORATED
4325 Lake Boone Trail|Suite 301|Raleigh, NC 27607
(984) 204-4500 | www.summerconsultants.com

FOR COMMANDER NAVFAC
ACTIVITY
SATISFACTORY TO DATE
DES ZAC | DRW ZAC | CHK WAN
<<PM/DM>> NICHOLAS A. HALL
BRANCH MANAGER PATRICK FAULKNER
CHIEF ENG/ARCH
<<XXX>>

DEPARTMENT OF THE NAVY
NAVAL FACILITIES ENGINEERING SYSTEMS COMMAND
FACILITIES ENGINEERING & ACQUISITIONS DIVISION
NAVAL FACILITIES ENGINEERING SYSTEMS COMMAND - MID-ATLANTIC
MCAS CHERRY POINT - CHERRY POINT, NC
MCAS CHERRY POINT, NC
CHERRY POINT, NC
REPLACE CHILLERS & COOLING TOWER
BUILDING 4225
CONTROLS

SCALE: AS NOTED
EPROJECT NO.: 7440851
CONSTR. CONTR. NO.
NAVFAC DRAWING NO. 12939367
SHEET 23 OF 39
M-702

FILE NAME: 231.007 M-702.DWG
OUR REF: 231.007
PLOT DATE: 4/30/2026 2:22:28 PM

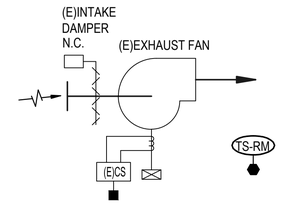

(E)EXHAUST FAN FLOW DIAGRAM

(E)EXHAUST FAN SEQUENCE OF OPERATION

FAN OPERATION: ON A RISE IN TEMPERATURE ABOVE SETPOINT OF 80°F (ADJUSTABLE), AS SENSED BY ROOM TEMPERATURE SENSOR TS-RM, THE FAN WILL START AND (E)INTAKE DAMPER WILL OPEN. ON A FALL IN TEMPERATURE OF 2°F BELOW SETPOINT, THE REVERSE WILL OCCUR.

MOTOR RUN TIME: (E)CURRENT SWITCH WILL INDICATE FAN MOTOR RUN TIME.

MOTOR STARTS: THE NUMBER OF MOTOR STARTS, AS INDICATED BY (E)CURRENT SWITCH, WILL BE TOTALIZED.

SYM	DESCRIPTION	DATE	APPR

NAVFAC

NORTH CAROLINA PROFESSIONAL SEAL 039797 ENGINEER ROBERT A. POINTER

05/04/2026

SUMMER CONSULTANTS INCORPORATED
4325 Lake Boone Trail|Suite 301|Raleigh, NC 27607
(984) 204-4500 | www.summerconsultants.com

FOR COMMANDER NAVFAC

ACTIVITY

SATISFACTORY TO DATE

DES ZAC	DRW ZAC	CHK WAN

<<PM/DM>> NICHOLAS A. HALL

BRANCH MANAGER PATRICK FAULKNER

CHIEF ENG/ARCH

<<XXX>>

DEPARTMENT OF THE NAVY
NAVAL FACILITIES ENGINEERING SYSTEMS COMMAND
FACILITIES ENGINEERING & ACQUISITIONS DIVISION

NAVAL FACILITIES ENGINEERING SYSTEMS COMMAND - MID-ATLANTIC
MCAS CHERRY POINT - CHERRY POINT, NC

MCAS CHERRY POINT, NC

CHERRY POINT, NC

REPLACE CHILLERS & COOLING TOWER BUILDING 4225

CONTROLS

SCALE: AS NOTED

EPROJECT NO.: 7440851

CONSTR. CONTR. NO.

NAVFAC DRAWING NO.
12939368

SHEET 24 OF 39

M-703

FILE NAME: 231.007 M-703.DWG
OUR REF: 231.007
PLOT DATE: 4/30/2026 2:22:35 PM

SEQUENCING NOTES

1. THE PROJECT MUST BE BUILT WHILE THE BUILDING REMAINS IN SERVICE AND OCCUPIED, AND MUST REMAIN IN SERVICE, EXCEPT FOR SCHEDULED OUTAGES.
2. GOVERNMENT PROVIDED TEMPORARY CHILLER AND CONTRACTOR PROVIDED SKID MOUNTED CHILLED WATER PUMP MUST BE TIED INTO THE EXISTING BUILDING SYSTEMS OVER A WEEKEND OUTAGE.
3. PRIOR TO THE INITIAL OUTAGE PERIOD, INSTALL THE TEMPORARY CHILLER 250 TON AND TEMPORARY CHILLER PUMP 20HP FUSED SAFETY SWITCHES AND CONDUIT. PRE-WIRE THE NEW FUSED SAFETY SWITCHES TO MINIMIZE THE DURATION OF THE OUTAGE.
4. DURING THE ALLOTTED OUTAGE PERIOD, WIRE THE FUSED SAFETY SWITCHES TO THEIR SOURCE AS INDICATED ON SHEET E-403.
5. PRIOR TO ENERGIZING THE LINE SIDE OF THE FUSED SAFETY SWITCHES, VERIFY ALL CONNECTIONS.
6. CONTINUE WIRING THE TEMPORARY CHILLER AND TEMPORARY PUMP TO THE NEW FUSED SAFETY SWITCHES.
7. PRIOR TO A FOLLOW UP OUTAGE PERIOD, INSTALL ALL REQUIRED ELECTRICAL CONNECTIONS FOR CH-1, CH-2, CWP-1, CWP-1, CWP-3, AND TEMPORARY CHILLER 80 TON FSS. PRE-WIRE THE NEW EQUIPMENT TO MINIMIZE THE DURATION OF THE OUTAGE.
8. DURING THE FOLLOW UP OUTAGE PERIOD, WIRE THE NEW EQUIPMENT TO THEIR SOURCE AS INDICATED ON THE PLANS.
9. AFTER INSTALLATION OF PERMANENT CHILLER EQUIPMENT, START-UP AND SWITCHOVER WILL OCCUR WITH PRIOR APPROVAL FROM THE CONTRACTING OFFICER, AT LEAST 2 WEEKS IN ADVANCE. FOR START-UP, DISCONNECT TEMPORARY CHILLER AND TEMPORARY PUMP POWER CONNECTION TO FUSED SAFETY SWITCHES. CONTRACTOR WILL PUT FUSED SAFETY SWITCHES TO REMAIN IN THE "OFF" POSITION.

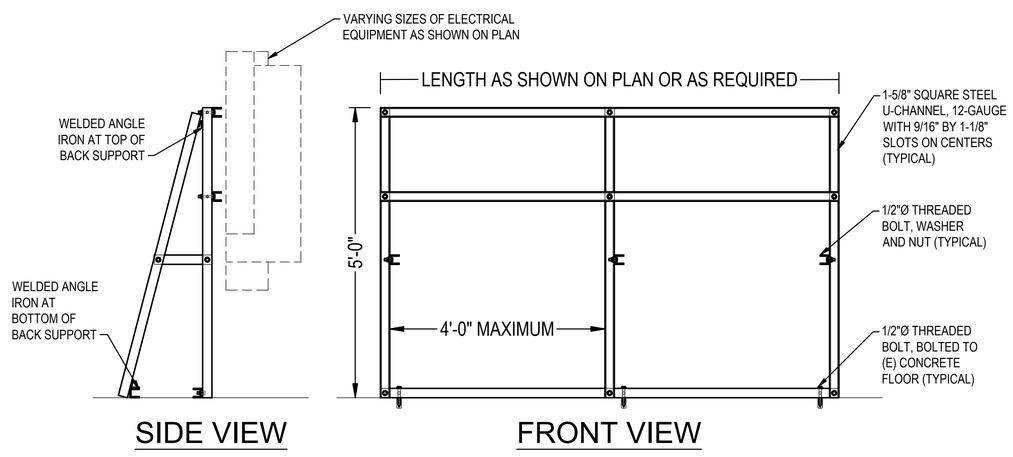

1 DETAIL - FREE-STANDING EQUIPMENT SUPPORT RACK
E-401 NOT TO SCALE

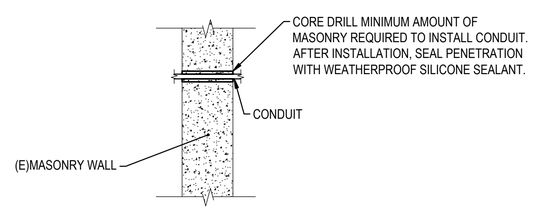

2 DETAIL - WALL PENETRATION
E-402 NOT TO SCALE

SYMBOLS

- DUPLEX RECEPTACLE, 20 AMPERE, 125 VOLT GROUNDING TYPE, NEMA 5-20R CONFIGURATION, SURFACE MOUNTED IN 4" SQUARE x 2-1/8" DEEP PRESSED STEEL JUNCTION BOX AT 18" ABOVE FINISHED FLOOR.
- QUADRUPLEX RECEPTACLE, 20 AMPERE, 125 VOLT GROUNDING TYPE, NEMA 5-20R CONFIGURATION, SURFACE MOUNTED IN 4" SQUARE x 2-1/8" DEEP PRESSED STEEL JUNCTION BOX AT 18" ABOVE FINISHED FLOOR.
- WALL MOUNTED LIGHTING FIXTURE, TYPE AS NOTED.
- S — LIGHT SWITCH, TOGGLE SWITCH, SINGLE POLE, 20 AMPERE, 120/277V, A.C. ONLY, RECESS MOUNTED AT 48" ABOVE FINISHED FLOOR UNLESS OTHER MOUNTING HEIGHT IS NOTED.
- [S] — SAME AS LIGHT SWITCH ABOVE, EXCEPT SURFACE MOUNTED.
- #10 / EM2 1,3,5 — BRANCH CIRCUIT CONDUIT AND CONDUCTORS RUN EXPOSED. SIZE IN ACCORDANCE WITH N.E.C. RACEWAY MUST BE MINIMUM 1/2" CONDUIT, AND WIRE MUST BE MINIMUM SIZE #12 AWG COPPER, UNLESS OTHER SIZES ARE SPECIFICALLY NOTED.
  - HOME RUN TO PANEL. NUMBER OF ARROWS INDICATE THE NUMBER OF CIRCUITS.
  - EM2 — PANEL NAME TO WHICH CIRCUITS RUN.
  - 1,3,5 — CIRCUIT BREAKERS IN PANEL SERVING THESE CIRCUITS.
  - #10 — WIRE SIZE IN AWG. SIZE NOT SHOWN INDICATES #12 AWG.

ABBREVIATIONS

A	AMPERES.
AF	FRAME SIZE IN AMPERES.
AFF	ABOVE FINISHED FLOOR.
AHU	AIR HANDLING UNIT.
ASD	SEE VFD
AT	TRIP SIZE IN AMPERES.
ATS	AUTOMATIC TRANSFER SWITCH.
AWG.	AMERICAN WIRE GAUGE.
BATT	BATTERY BACK-UP.
BLDG.	BUILDING.
C/B	CIRCUIT BREAKER.
CBM	CERTIFIED BALLAST MANUFACTURERS.
DDC	DIRECT DIGITAL CONTROL.
EC	EMPTY CONDUIT.
EM	EMERGENCY PANEL.
EMT	ELECTRICAL METALLIC TUBING.
ETR	EXISTING TO REMAIN.
EW	EMERGENCY WHITE.
EWC	ELECTRIC WATER COOLER.
FSS	FUSED SAFETY SWITCH.
FA	FIRE ALARM.
FAAP	FIRE ALARM ANNUNCIATOR PANEL.
FACP	FIRE ALARM CONTROL PANEL.
FCU	FAN COIL UNIT.
FLA	FULL LOAD AMPERES.
FVNR	FULL VOLTAGE NON-REVERSING.
GFCI	GOVERNMENT FURNISHED, CONTRACTOR INSTALLED.
GFI	GROUND FAULT INTERRUPTER.
GRD.	GROUND CONDUCTOR.
H-O-A	HAND-OFF-AUTOMATIC SELECTOR SWITCH.
KAIC	THOUSAND AMPERE INTERRUPTING CAPACITY.
KW	KILO-WATTS.
MCC	MOTOR CONTROL CENTER.
M.L.O.	MAIN LUGS ONLY.
N.C.	NORMALLY CLOSED.
N.E.C.	NATIONAL ELECTRICAL CODE.
NEMA	NATIONAL ELECTRICAL MANUFACTURER'S ASSOCIATION.
NFSS	NON-FUSED SAFETY SWITCH.
N.O.	NORMALLY OPEN.
P	NUMBER OF POLES.
PH.	NUMBER OF PHASES.
PVC	POLY-VINYL CHLORIDE.
RGS	RIGID GALVANIZED STEEL.
SPD	SURGE PROTECTIVE DEVICE.
U.L.	UNDERWRITER'S LABORATORIES.
UNK	UNKNOWN
V	VOLTAGE.
VFD, ASD, VFC	VARIABLE FREQUENCY DRIVE, ADJUSTABLE SPEED DRIVE, VARIABLE FREQUENCY MOTOR CONTROLLER AS SPECIFIED
WP	WEATHERPROOF, OR NEMA 3R ENCLOSURE.

SYMBOLS

- HEAVY DUTY ENCLOSED SAFETY SWITCH, SEE MOTOR AND EQUIPMENT SCHEDULE FOR SIZES AND CHARACTERISTICS.
- FUSED HEAVY DUTY ENCLOSED SAFETY SWITCH, SEE MOTOR AND EQUIPMENT SCHEDULE FOR SIZES AND CHARACTERISTICS.
- COMBINATION HEAVY DUTY SAFETY SWITCH AND MAGNETIC MOTOR STARTER, SEE MOTOR AND EQUIPMENT SCHEDULE FOR SIZES AND CHARACTERISTICS.
- MOTOR, SEE MOTOR AND EQUIPMENT SCHEDULE FOR SIZES AND CHARACTERISTICS.
- CIRCUIT BREAKER TYPE PANELBOARD.
- DISTRIBUTION TYPE PANELBOARD.
- SWITCH AND FUSE TYPE PANELBOARD.
- ELECTRICAL POINT OF CONNECTION.
- T — TRANSFORMER, SEE POWER RISER DIAGRAM FOR CHARACTERISTICS.
- HTC — TWO CHANNEL HEAT TRACE CONTROLLER WITH GFEP PER CHANNEL
- VFD — VARIABLE FREQUENCY DRIVE, ADJUSTABLE SPEED DRIVE, VARIABLE FREQUENCY MOTOR CONTROLLER AS SPECIFIED.
- J — JUNCTION BOX, 4" SQUARE x 2-1/8" DEEP GALVANIZED PRESSED STEEL, RECESS MOUNTED AT 18" ABOVE FINISHED FLOOR, WITH BLANK COVER PLATE.
- (J) — JUNCTION BOX, 4" SQUARE x 2-1/8" DEEP GALVANIZED PRESSED STEEL, MOUNTED ABOVE SUSPENDED TILE CEILING.

GENERAL NOTES

G1. ALL WORK MUST BE NEW AND PROVIDED UNDER THIS CONTRACT UNLESS SPECIFICALLY MARKED "EXISTING", "EXIST.", OR "(E)".

G2. VERIFY LOCATION AND DIMENSIONS OF EXISTING EQUIPMENT AND COORDINATE ALL WORK PRIOR TO THE START OF CONSTRUCTION.

G3. DEFINITION (DEMOLITION DRAWINGS ONLY): DISCONNECTION AND REMOVAL OF ASSOCIATED CONDUCTORS MUST CONSIST OF THE REMOVAL OF THE CONDUCTORS BACK TO THE NEXT EXISTING DEVICE TO REMAIN. PROVIDE NEW CONDUIT AND CONDUCTORS TO RECONNECT ANY EXISTING TO REMAIN DEVICES INTERRUPTED BY THE DEMOLITION UNDER THIS PROJECT. DISCONNECTION AND REMOVAL OF ASSOCIATED CONDUITS MUST INCLUDE ALL EXPOSED CONDUITS AND CONDUITS CONCEALED WITH DRYWALL SURFACES BACK TO NEXT EXISTING DEVICE. CUT AND PATCH DRYWALL SURFACES AS REQUIRED FOR REMOVAL OF CONDUIT.

GENERAL SYMBOLS

FLOOR PLAN AND DETAIL TITLES:

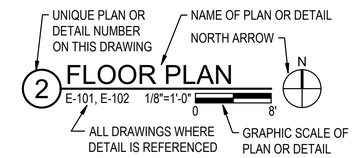

2-PART REFERENCE DETAIL IDENTIFICATION:

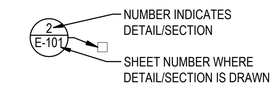

SECTION IDENTIFICATION

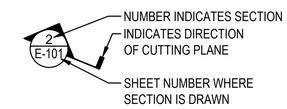

NORTH ARROW

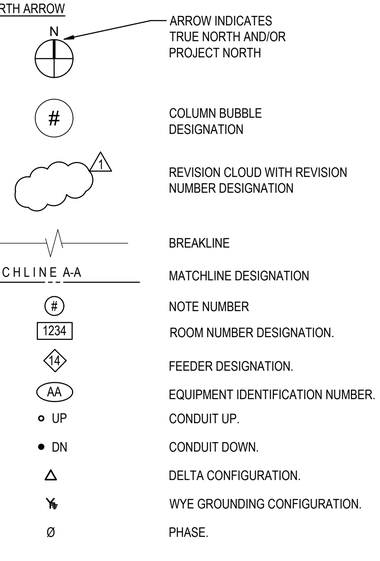

SYM	DESCRIPTION	DATE	APPR.

NAVFAC

NORTH CAROLINA PROFESSIONAL SEAL 057761 ENGINEER WILLIAM E. MARCINIAK
05/04/2026

SUMMER CONSULTANTS INCORPORATED
4325 Lake Boone Trail|Suite 301|Raleigh, NC 27607
(984) 204-4500 | www.summerconsultants.com

FOR COMMANDER NAVFAC
ACTIVITY
SATISFACTORY TO DATE
DES GB DRW GB CHK WM
<<PMDM>> NICHOLAS A. HALL
BRANCH MANAGER PATRICK FAULKNER
CHIEF ENG/ARCH
<<XXX>>

DEPARTMENT OF THE NAVY
NAVAL FACILITIES ENGINEERING COMMAND
FACILITIES ENGINEERING & ACQUISITIONS DIVISION
NAVAL FACILITIES ENGINEERING SYSTEMS COMMAND
NAVAL FACILITIES ENGINEERING SYSTEMS COMMAND - MID-ATLANTIC
MCAS CHERRY POINT - CHERRY POINT, NC
MCAS CHERRY POINT, NC
CHERRY POINT, NC
REPLACE CHILLERS & COOLING TOWER
BUILDING 4225
SYMBOLS & ABBREVIATIONS

SCALE: AS NOTED
EPROJECT NO.: 7440851
CONSTR. CONTR. NO.
NAVFAC DRAWING NO. 12939369
SHEET 25 OF 39
E-001

FILE NAME: 231.007 E-001.DWG
OUR REF: 231.007
PLOT DATE: 4/30/2026 3:12:23 PM

GENERAL NOTES

G1. ALL WORK MUST BE NEW AND PROVIDED UNDER THIS CONTRACT UNLESS SPECIFICALLY MARKED "EXISTING", "EXIST.", OR "(E)".

G2. VERIFY LOCATION AND DIMENSIONS OF EXISTING EQUIPMENT AND COORDINATE ALL WORK PRIOR TO THE START OF CONSTRUCTION.

G3. DEFINITION (DEMOLITION DRAWINGS ONLY): DISCONNECTION AND REMOVAL OF ASSOCIATED CONDUCTORS MUST CONSIST OF THE REMOVAL OF THE CONDUCTORS BACK TO THE NEXT EXISTING DEVICE TO REMAIN. PROVIDE NEW CONDUIT AND CONDUCTORS TO RECONNECT ANY EXISTING TO REMAIN DEVICES INTERRUPTED BY THE DEMOLITION UNDER THIS PROJECT. DISCONNECTION AND REMOVAL OF ASSOCIATED CONDUITS MUST INCLUDE ALL EXPOSED CONDUITS AND CONDUITS CONCEALED WITH DRYWALL SURFACES BACK TO NEXT EXISTING DEVICE. CUT AND PATCH DRYWALL SURFACES AS REQUIRED FOR REMOVAL OF CONDUIT.

NOTES

1. NOT USED.

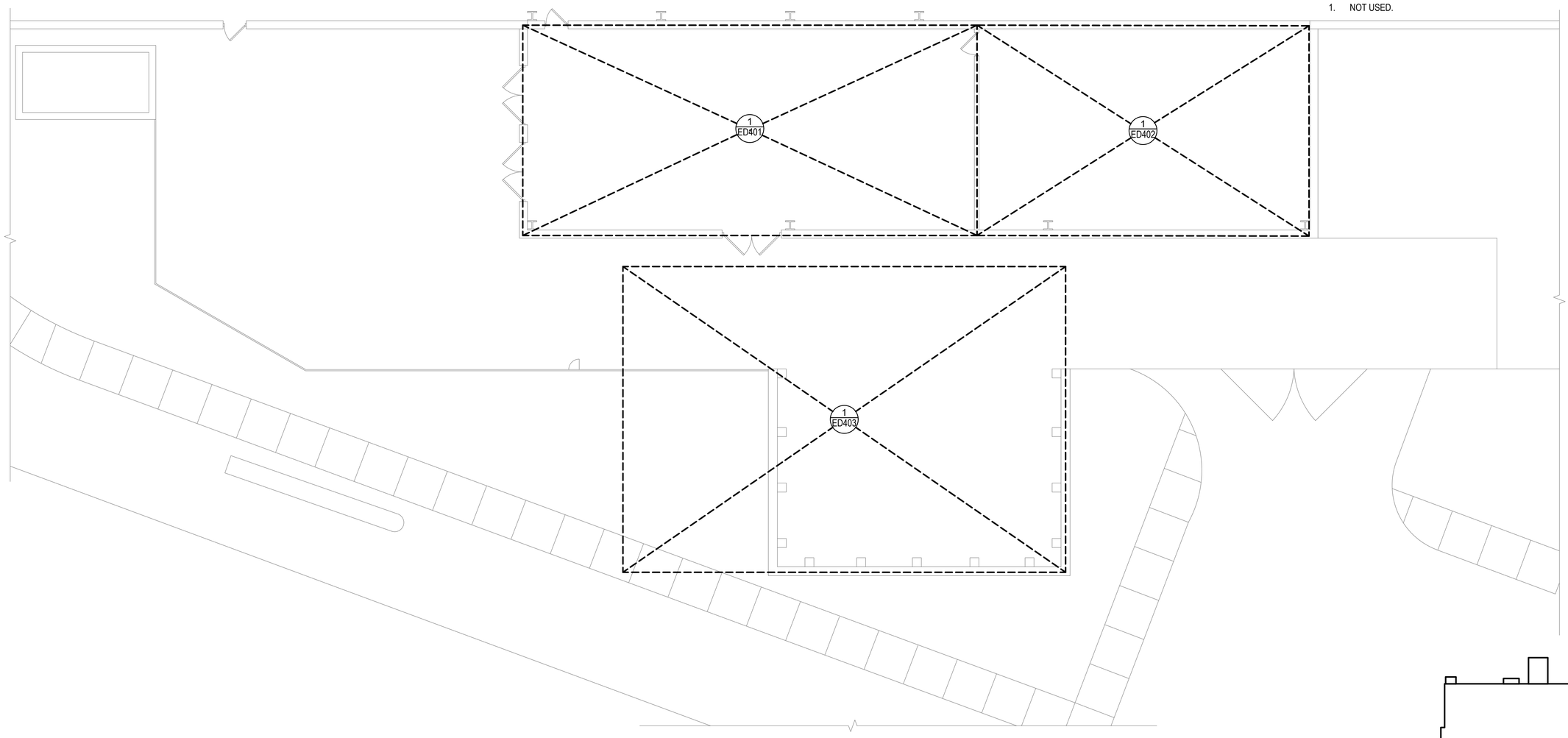

1 OVERALL PLAN - DEMOLITION

1/8"=1'-0"

0 8' 16'

N

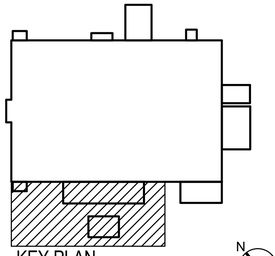

KEY PLAN

N.T.S.

N

SYM	DESCRIPTION	DATE	APPR

NAVFAC

NORTH CAROLINA PROFESSIONAL SEAL 057761 ENGINEER WILLIAM E. MARCINIAK

05/04/2026

SUMMER CONSULTANTS INCORPORATED

4325 Lake Boone Trail|Suite 301|Raleigh, NC 27607
(984) 204-4500 | www.summerconsultants.com

FOR COMMANDER NAVFAC

ACTIVITY

SATISFACTORY TO DATE

DES	GB	DRW	GB	CHK	WM

<<PM/DM>> NICHOLAS A. HALL

BRANCH MANAGER PATRICK FAULKNER

CHIEF ENG/ARCH

<<XXX>>

DEPARTMENT OF THE NAVY
NAVAL FACILITIES ENGINEERING SYSTEMS COMMAND
FACILITIES ENGINEERING & ACQUISITIONS DIVISION

NAVAL FACILITIES ENGINEERING SYSTEMS COMMAND - MID-ATLANTIC
MCAS CHERRY POINT - CHERRY POINT, NC

MCAS CHERRY POINT, NC

REPLACE CHILLERS & COOLING TOWER BUILDING 4225

OVERALL PLAN - DEMOLITION

SCALE: AS NOTED

EPROJECT NO.: 7440851

CONSTR. CONTR. NO.

NAVFAC DRAWING NO.
12939370

SHEET 26 OF 39

ED101

FILE NAME: 231.007 ED101.DWG
OUR REF: 231.007
PLOT DATE: 4/30/2026 3:12:31 PM

GENERAL NOTES

G1. ALL WORK MUST BE NEW AND PROVIDED UNDER THIS CONTRACT UNLESS SPECIFICALLY MARKED "EXISTING", "EXIST.", OR "(E)".

G2. VERIFY LOCATION AND DIMENSIONS OF EXISTING EQUIPMENT AND COORDINATE ALL WORK PRIOR TO THE START OF CONSTRUCTION.

G3. DEFINITION (DEMOLITION DRAWINGS ONLY): DISCONNECTION AND REMOVAL OF ASSOCIATED CONDUCTORS MUST CONSIST OF THE REMOVAL OF THE CONDUCTORS BACK TO THE NEXT EXISTING DEVICE TO REMAIN. PROVIDE NEW CONDUIT AND CONDUCTORS TO RECONNECT ANY EXISTING TO REMAIN DEVICES INTERRUPTED BY THE DEMOLITION UNDER THIS PROJECT. DISCONNECTION AND REMOVAL OF ASSOCIATED CONDUITS MUST INCLUDE ALL EXPOSED CONDUITS AND CONDUITS CONCEALED WITH DRYWALL SURFACES BACK TO NEXT EXISTING DEVICE. CUT AND PATCH DRYWALL SURFACES AS REQUIRED FOR REMOVAL OF CONDUIT.

NOTES

1. DISCONNECT POWER CONNECTION TO CHILLER. REMOVE ALL ASSOCIATED STARTERS, DISCONNECTS, CONDUIT, AND CONDUCTORS BACK TO SERVING PANEL.

2. DISCONNECT POWER CONNECTION TO PUMP MOTOR. REMOVE ALL ASSOCIATED STARTERS, DISCONNECTS, VFDS, CONDUCTORS, AND CONDUIT BACK TO SERVING PANEL.

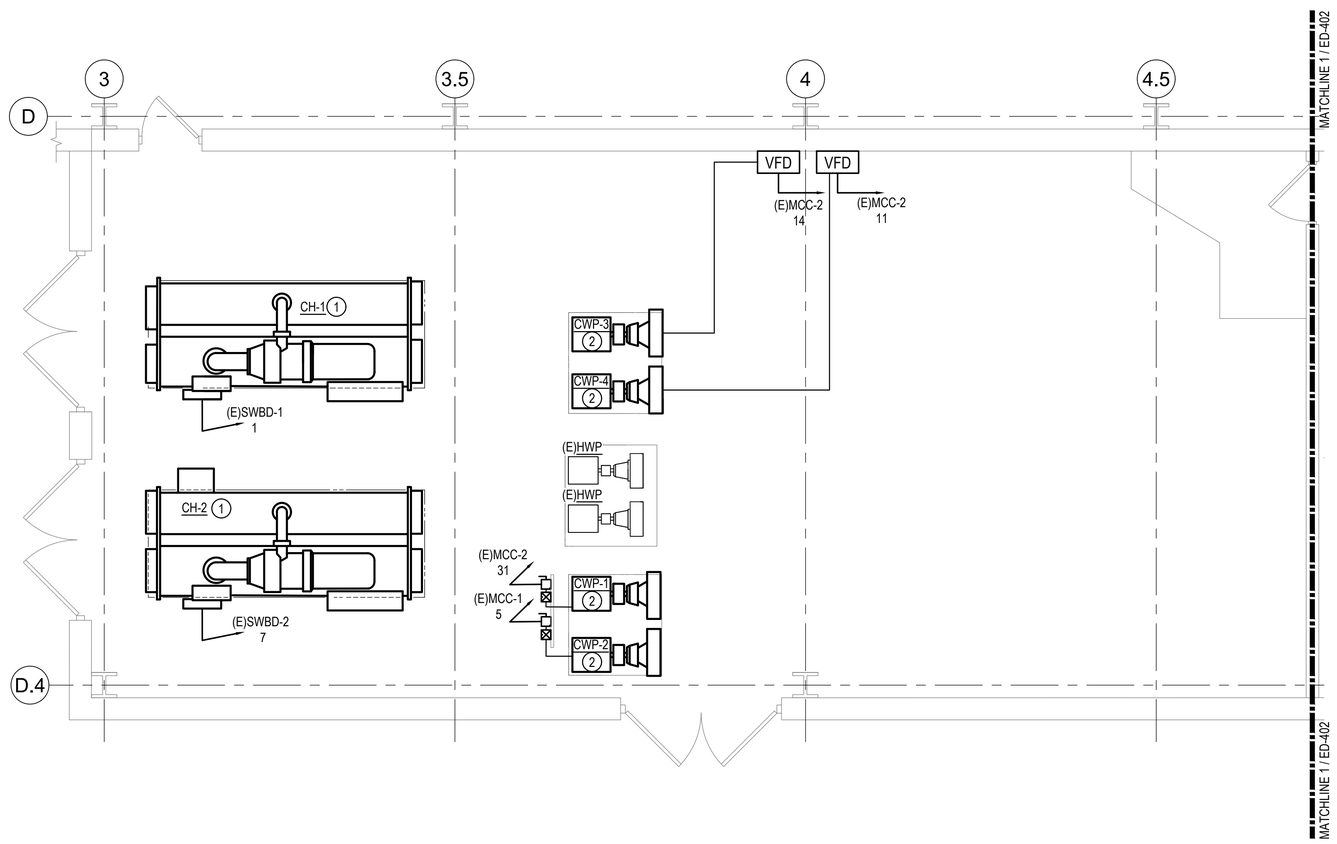

1 MECHANICAL ROOM PLAN - DEMOLITION

1/4"=1'-0"

0 4' 8'

N

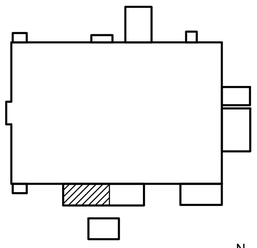

KEY PLAN

N.T.S.

N

SYM	DESCRIPTION	DATE	APPR

NAVFAC

NORTH CAROLINA PROFESSIONAL SEAL 057761 WILLIAM E. MARCINIAK ENGINEER

05/04/2026

SUMMER CONSULTANTS INCORPORATED

4325 Lake Boone Trail|Suite 301|Raleigh, NC 27607
(984) 204-4500 | www.summerconsultants.com

FOR COMMANDER NAVFAC

ACTIVITY

SATISFACTORY TO DATE

DES	GB	DRW	GB	CHK	WM

<<PM/DM>> NICHOLAS A. HALL

BRANCH MANAGER PATRICK FAULKNER

CHIEF ENG/ARCH

<<XXX>>

DEPARTMENT OF THE NAVY
NAVAL FACILITIES ENGINEERING SYSTEMS COMMAND
FACILITIES ENGINEERING & ACQUISITIONS DIVISION

NAVAL FACILITIES ENGINEERING SYSTEMS COMMAND - MID-ATLANTIC
MCAS CHERRY POINT - CHERRY POINT, NC

MCAS CHERRY POINT, NC

CHERRY POINT, NC
REPLACE CHILLERS & COOLING TOWER
BUILDING 4225

MECHANICAL ROOM PLAN - DEMOLITION

SCALE: AS NOTED

EPROJECT NO.: 7440851

CONSTR. CONTR. NO.

NAVFAC DRAWING NO. 12939371

SHEET 27 OF 39

ED401

FILE NAME: 231.007 ED401.DWG
OUR REF: 231.007
PLOT DATE: 4/30/2026 3:12:38 PM

GENERAL NOTES

G1. ALL WORK MUST BE NEW AND PROVIDED UNDER THIS CONTRACT UNLESS SPECIFICALLY MARKED "EXISTING", "EXIST.", OR "(E)".

G2. VERIFY LOCATION AND DIMENSIONS OF EXISTING EQUIPMENT AND COORDINATE ALL WORK PRIOR TO THE START OF CONSTRUCTION.

G3. DEFINITION (DEMOLITION DRAWINGS ONLY): DISCONNECTION AND REMOVAL OF ASSOCIATED CONDUCTORS MUST CONSIST OF THE REMOVAL OF THE CONDUCTORS BACK TO THE NEXT EXISTING DEVICE TO REMAIN. PROVIDE NEW CONDUIT AND CONDUCTORS TO RECONNECT ANY EXISTING TO REMAIN DEVICES INTERRUPTED BY THE DEMOLITION UNDER THIS PROJECT. DISCONNECTION AND REMOVAL OF ASSOCIATED CONDUITS MUST INCLUDE ALL EXPOSED CONDUITS AND CONDUITS CONCEALED WITH DRYWALL SURFACES BACK TO NEXT EXISTING DEVICE. CUT AND PATCH DRYWALL SURFACES AS REQUIRED FOR REMOVAL OF CONDUIT.

NOTES

1. DISCONNECT AND REMOVE AFFECTED CIRCUITS FROM EXISTING PANEL. REFER TO SHEET ED403 FOR AFFECTED CIRCUITS.
2. DISCONNECT AND REMOVE AFFECTED CIRCUITS FROM EXISTING MCC. REFER TO SHEET ED401 AND ED403 FOR AFFECTED CIRCUITS.
3. DISCONNECT AND REMOVE AFFECTED CIRCUITS FROM EXISTING SWITCHBOARD. REFER TO SHEET ED401 AND ED403 FOR AFFECTED CIRCUITS.
4. PANELBOARDS HAVE THE SAME NAME IN FIELD. THEIR VOLTAGE IS ADDED TO THEIR NAME ON THE DRAWINGS TO DISTINGUISH BETWEEN THE TWO PANELBOARDS. VERIFY PANELBOARDS AND LOADS CONNECTED BEFORE WORK IS PERFORMED.

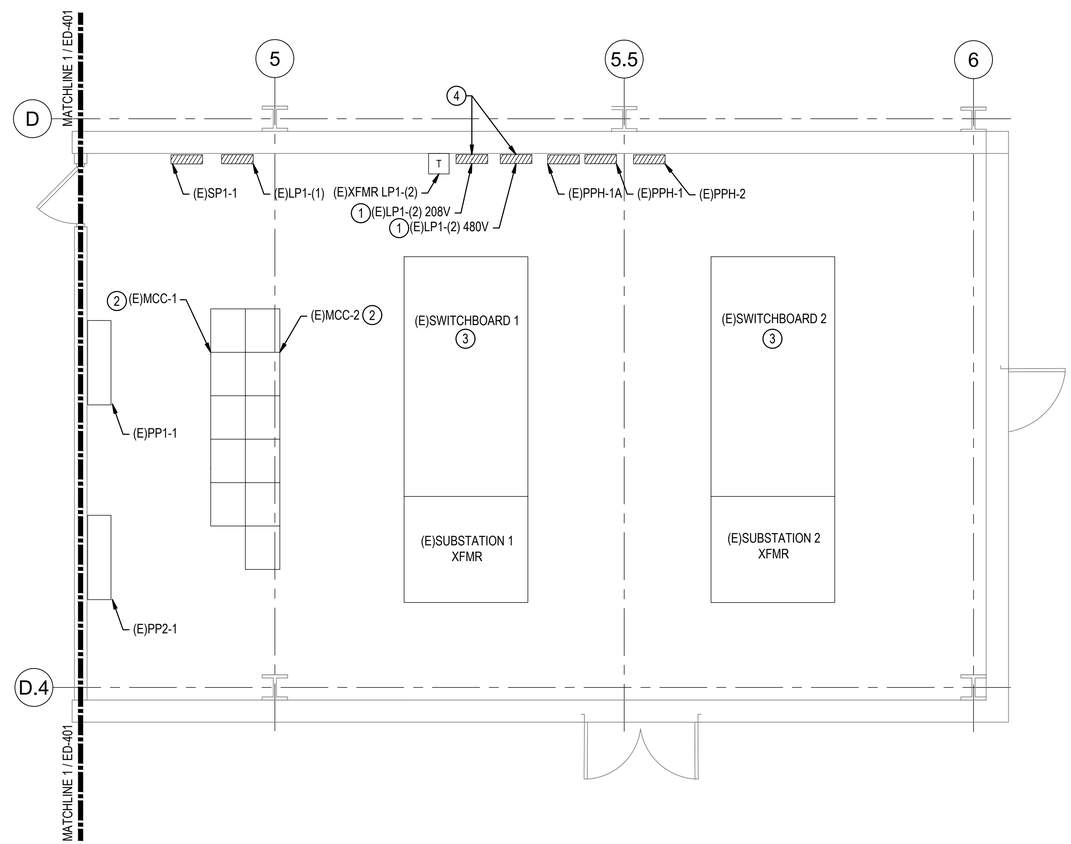

1 ELECTRICAL ROOM PLAN - DEMOLITION

1/4"=1'-0"
0 4' 8'

N

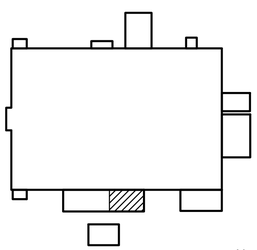

KEY PLAN
N.T.S.

N

								APPR
								DATE
								DESCRIPTION
								SYM

NAVFAC

NORTH CAROLINA PROFESSIONAL SEAL 057761 ENGINEER WILLIAM E. MARCINIAK
05/04/2026

SUMMER CONSULTANTS INCORPORATED
4325 Lake Boone Trail|Suite 301|Raleigh, NC 27607
(984) 204-4500 | www.summerconsultants.com

FOR COMMANDER NAVFAC
ACTIVITY
SATISFACTORY TO DATE

DES	GB	DRW	GB	CHK	WM

<<PM/DM>> NICHOLAS A. HALL
BRANCH MANAGER PATRICK FAULKNER
CHIEF ENG/ARCH
<<XXX>>

DEPARTMENT OF THE NAVY
NAVAL FACILITIES ENGINEERING SYSTEMS COMMAND
FACILITIES ENGINEERING & ACQUISITIONS DIVISION

NAVAL FACILITIES ENGINEERING SYSTEMS COMMAND - MID-ATLANTIC
MCAS CHERRY POINT - CHERRY POINT, NC

MCAS CHERRY POINT, NC
CHERRY POINT, NC
REPLACE CHILLERS & COOLING TOWER
BUILDING 4225

ELECTRICAL ROOM PLAN - DEMOLITION

SCALE: AS NOTED
EPROJECT NO.: 7440851
CONSTR. CONTR. NO.
NAVFAC DRAWING NO. 12939372
SHEET 28 OF 39
ED402

FILE NAME: 231.007 ED402.DWG
OUR REF: 231.007
PLOT DATE: 4/30/2026 3:12:46 PM

GENERAL NOTES

G1. ALL WORK MUST BE NEW AND PROVIDED UNDER THIS CONTRACT UNLESS SPECIFICALLY MARKED "EXISTING", "EXIST.", OR "(E)".

G2. VERIFY LOCATION AND DIMENSIONS OF EXISTING EQUIPMENT AND COORDINATE ALL WORK PRIOR TO THE START OF CONSTRUCTION.

G3. DEFINITION (DEMOLITION DRAWINGS ONLY): DISCONNECTION AND REMOVAL OF ASSOCIATED CONDUCTORS MUST CONSIST OF THE REMOVAL OF THE CONDUCTORS BACK TO THE NEXT EXISTING DEVICE TO REMAIN. PROVIDE NEW CONDUIT AND CONDUCTORS TO RECONNECT ANY EXISTING TO REMAIN DEVICES INTERRUPTED BY THE DEMOLITION UNDER THIS PROJECT. DISCONNECTION AND REMOVAL OF ASSOCIATED CONDUITS MUST INCLUDE ALL EXPOSED CONDUITS AND CONDUITS CONCEALED WITH DRYWALL SURFACES BACK TO NEXT EXISTING DEVICE. CUT AND PATCH DRYWALL SURFACES AS REQUIRED FOR REMOVAL OF CONDUIT.

NOTES

1. DISCONNECT POWER CONNECTION TO PUMP MOTOR. REMOVE ALL ASSOCIATED STARTERS, DISCONNECTS, CONDUCTORS, AND CONDUIT BACK TO SERVING PANEL.
2. DISCONNECT POWER CONNECTION TO COOLING TOWER. REMOVE ALL ASSOCIATED STARTERS, VFDS, DISCONNECTS, CONDUCTORS, AND CONDUIT BACK TO SERVING PANEL.
3. DISCONNECT AND REMOVE SWITCH. REMOVE HEAT TRACE AND HEAT TRACE CONTROLLER THAT IS SERVED BY THE SWITCH. REMOVE ALL ASSOCIATED CONDUIT AND CONDUCTORS BACK TO SERVING PANEL.
4. DISCONNECT POWER TO SUMP HEATER. REMOVE ALL ASSOCIATED DISCONNECTS, CONDUCTORS, AND CONDUIT BACK TO SERVING PANEL. MARK BREAKER AS SPARE.
5. REMOVE CMU ENCLOSURE WALL COMPLETE. DISCONNECT ANY EXISTING TO REMAIN CONDUIT BEING SUPPORTED BY WALL AND REROUTE CONDUIT. COORDINATE AND REFER TO STRUCTURAL DRAWINGS FOR MORE REQUIREMENTS.
6. REMOVE CHAIN LINK FENCE COMPLETE. SEE CIVIL DRAWINGS FOR MORE REQUIREMENTS.
7. DISCONNECT AND REMOVE LIGHTING FIXTURE MOUNTED ON TOP OF ENCLOSURE WALL. DISCONNECT AND REMOVE ASSOCIATED CONDUIT AND CONDUCTORS BACK TO SERVING PANEL
8. DISCONNECT AND REMOVE DEVICE. DISCONNECT AND REMOVE ASSOCIATED CONDUIT AND CONDUCTORS BACK TO SERVING PANEL.

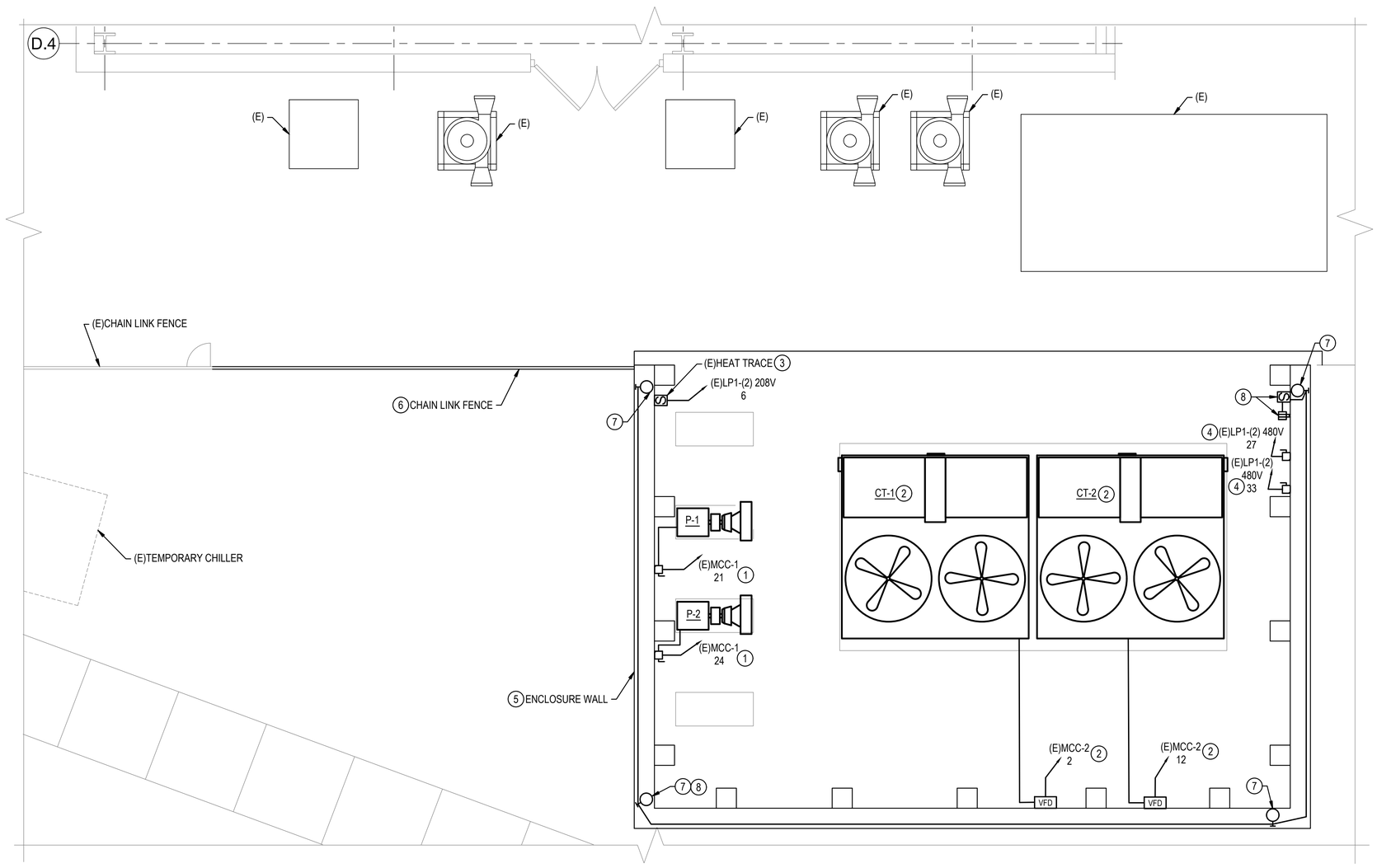

1 MECHANICAL YARD PLAN - DEMOLITION

1/4"=1'-0" 0 4' 8'

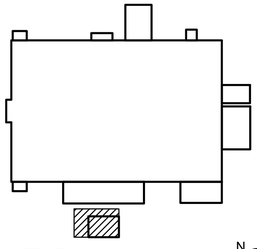

KEY PLAN

N.T.S.

REV	DATE	DESCRIPTION	BY

NAVFAC

NORTH CAROLINA PROFESSIONAL SEAL 057761 ENGINEER WILLIAM E. MARCINIAK

05/04/2026

SUMMER CONSULTANTS INCORPORATED
4325 Lake Boone Trail | Suite 301 | Raleigh, NC 27607
(984) 204-4500 | www.summerconsultants.com

FOR COMMANDER NAVFAC

ACTIVITY

SATISFACTORY TO DATE

DES	GB	DRW	GB	CHK	WM

<<PM/DM>> NICHOLAS A. HALL

BRANCH MANAGER PATRICK FAULKNER

CHIEF ENG/ARCH

<<XXX>>

DEPARTMENT OF THE NAVY
NAVAL FACILITIES ENGINEERING SYSTEMS COMMAND
FACILITIES ENGINEERING & ACQUISITIONS DIVISION

NAVAL FACILITIES ENGINEERING SYSTEMS COMMAND - MID-ATLANTIC
MCAS CHERRY POINT - CHERRY POINT, NC

MCAS CHERRY POINT, NC
CHERRY POINT, NC
REPLACE CHILLERS & COOLING TOWER
BUILDING 4225

MECHANICAL YARD PLAN - DEMOLITION

SCALE: AS NOTED

EPROJECT NO.: 7440851

CONSTR. CONTR. NO.

NAVFAC DRAWING NO. 12939373

SHEET 29 OF 39

ED403

FILE NAME: 231.007 ED403.DWG
OUR REF: 231.007
PLOT DATE: 4/30/2026 3:12:53 PM

GENERAL NOTES

G1. ALL WORK MUST BE NEW AND PROVIDED UNDER THIS CONTRACT UNLESS SPECIFICALLY MARKED "EXISTING", "EXIST.", OR "(E)".

G2. VERIFY LOCATION AND DIMENSIONS OF EXISTING EQUIPMENT AND COORDINATE ALL WORK PRIOR TO THE START OF CONSTRUCTION.

NOTES

1. NOT USED.

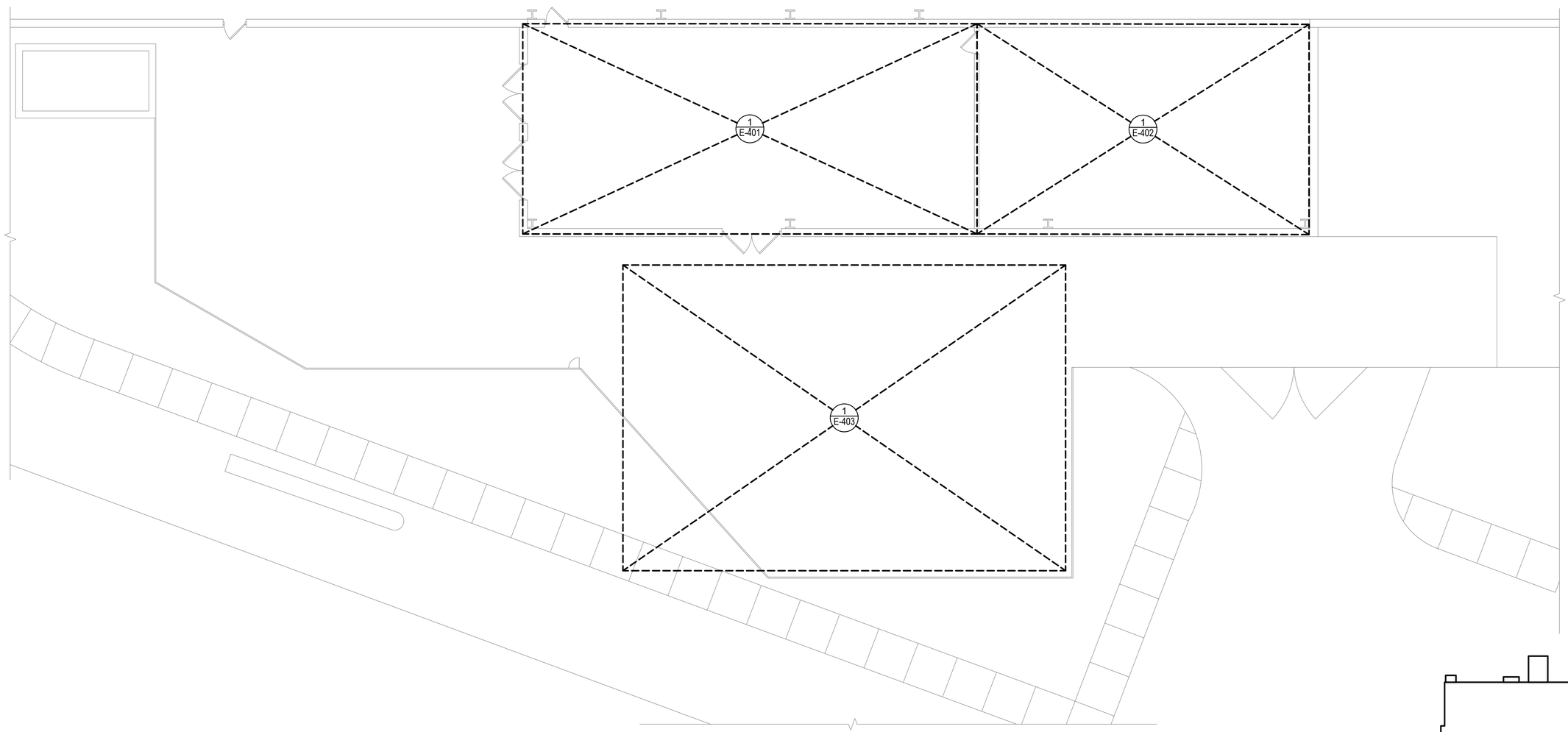

1 OVERALL PLAN
1/8"=1'-0"
0 8' 16'
N

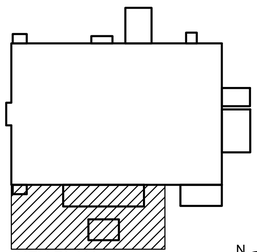

KEY PLAN
N.T.S.
N

SYM	DESCRIPTION	DATE	APPR

NAVFAC

NORTH CAROLINA PROFESSIONAL SEAL 057761 ENGINEER WILLIAM E. MARCINIAK
05/04/2026

SUMMER CONSULTANTS INCORPORATED
4325 Lake Boone Trail|Suite 301|Raleigh, NC 27607
(984) 204-4500 | www.summerconsultants.com

FOR COMMANDER NAVFAC
ACTIVITY
SATISFACTORY TO DATE

DES GB	DRW GB	CHK WM

<<PM/DM>> NICHOLAS A. HALL
BRANCH MANAGER PATRICK FAULKNER
CHIEF ENG/ARCH
<<XXX>>

DEPARTMENT OF THE NAVY
NAVAL FACILITIES ENGINEERING SYSTEMS COMMAND
FACILITIES ENGINEERING & ACQUISITIONS DIVISION

NAVAL FACILITIES ENGINEERING SYSTEMS COMMAND - MID-ATLANTIC
MCAS CHERRY POINT - CHERRY POINT, NC

MCAS CHERRY POINT, NC
CHERRY POINT, NC
REPLACE CHILLERS & COOLING TOWER
BUILDING 4225

OVERALL PLAN

SCALE: AS NOTED
EPROJECT NO.: 7440851
CONSTR. CONTR. NO.
NAVFAC DRAWING NO.
12939374
SHEET 30 OF 39
E-101

FILE NAME: 231.007 E-101.DWG
OUR REF: 231.007
PLOT DATE: 4/30/2026 3:13:07 PM

GENERAL NOTES

G1. ALL WORK MUST BE NEW AND PROVIDED UNDER THIS CONTRACT UNLESS SPECIFICALLY MARKED "EXISTING", "EXIST.", OR "(E)".

G2. VERIFY LOCATION AND DIMENSIONS OF EXISTING EQUIPMENT AND COORDINATE ALL WORK PRIOR TO THE START OF CONSTRUCTION.

NOTES

1. REFER TO THE MOTOR AND EQUIPMENT SCHEDULE ON SHEET E-601 FOR THE EQUIPMENT CONDUIT AND CONDUCTOR SIZES.
2. PROVIDE HEAT TRACE CONTROLLER WITH NEMA 5-20 GFI RECEPTACLE AND PLUG.

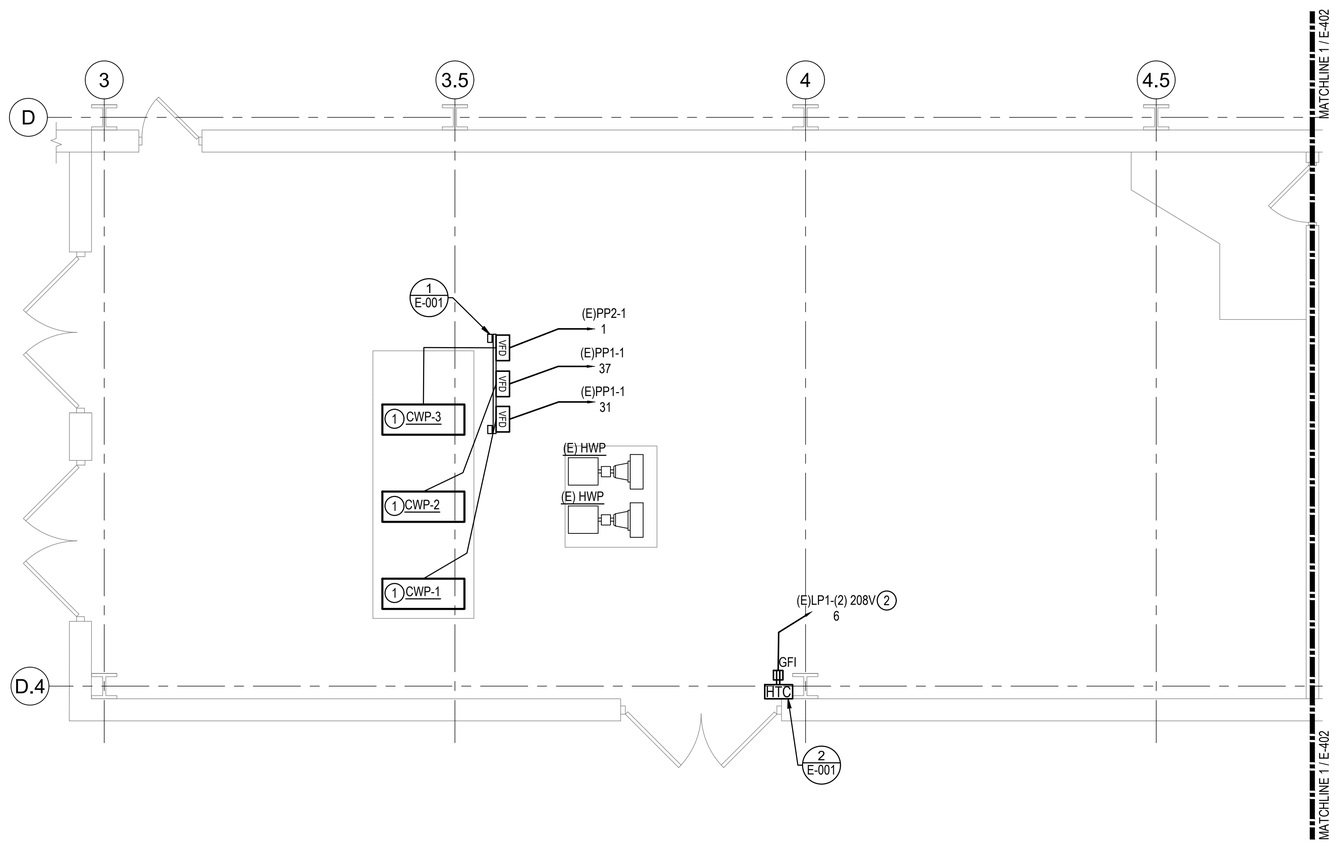

1 MECHANICAL ROOM PLAN

1/4"=1'-0"

0 4' 8'

N

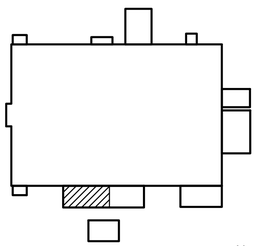

KEY PLAN

N.T.S.

N

MARK	DATE	DESCRIPTION	BY

NAVFAC

NORTH CAROLINA PROFESSIONAL SEAL 057761 ENGINEER WILLIAM E. MARCINIAK

05/04/2026

SUMMER CONSULTANTS INCORPORATED

4325 Lake Boone Trail|Suite 301|Raleigh, NC 27607
(984) 204-4500 | www.summerconsultants.com

FOR COMMANDER NAVFAC

ACTIVITY

SATISFACTORY TO DATE

DES GB | DRW GB | CHK WM

<<PM/DM>> NICHOLAS A. HALL

BRANCH MANAGER PATRICK FAULKNER

CHIEF ENG/ARCH

<<XXX>>

DEPARTMENT OF THE NAVY
NAVAL FACILITIES ENGINEERING SYSTEMS COMMAND
FACILITIES ENGINEERING & ACQUISITIONS DIVISION

NAVAL FACILITIES ENGINEERING SYSTEMS COMMAND - MID-ATLANTIC
MCAS CHERRY POINT - CHERRY POINT, NC

MCAS CHERRY POINT, NC
CHERRY POINT, NC

REPLACE CHILLERS & COOLING TOWER
BUILDING 4225

MECHANICAL ROOM PLAN

SCALE: AS NOTED

EPROJECT NO.: 7440851

CONSTR. CONTR. NO.

NAVFAC DRAWING NO.
12939375

SHEET 31 OF 39

E-401

FILE NAME: 231.007 E-401.DWG
OUR REF: 231.007
PLOT DATE: 4/30/2026 3:13:14 PM

GENERAL NOTES

G1. ALL WORK MUST BE NEW AND PROVIDED UNDER THIS CONTRACT UNLESS SPECIFICALLY MARKED "EXISTING", "EXIST.", OR "(E)".

G2. VERIFY LOCATION AND DIMENSIONS OF EXISTING EQUIPMENT AND COORDINATE ALL WORK PRIOR TO THE START OF CONSTRUCTION.

NOTES

1. CONNECT NEW CIRCUITS TO EXISTING PANEL. REFER TO SHEET E-401 FOR NEW CIRCUITS. REFER TO E-601 FOR UPDATED PANEL SCHEDULE.
2. PANELBOARDS HAVE THE SAME NAME IN FIELD. THEIR VOLTAGE IS ADDED TO THEIR NAME ON THE DRAWINGS TO DISTINGUISH BETWEEN THE TWO PANELBOARDS. VERIFY PANELBOARDS AND NEW LOADS BEFORE WORK IS PERFORMED.
3. CONNECT NEW CIRCUITS TO EXISTING SWITCHBOARD. REFER TO SHEET E-403 FOR NEW CIRCUITS. REFER TO E-604 FOR UPDATED SWITCHBOARD SCHEDULE.
4. CONNECT NEW CIRCUITS TO EXISTING PANEL. REFER TO SHEET E-401 AND E-403 FOR AFFECTED CIRCUITS. REFER TO E-605 FOR UPDATED PANEL SCHEDULE.
5. CONNECT NEW CIRCUITS TO EXISTING PANEL. REFER TO SHEET E-401 FOR AFFECTED CIRCUITS. REFER TO E-605 FOR UPDATED PANEL SCHEDULE.

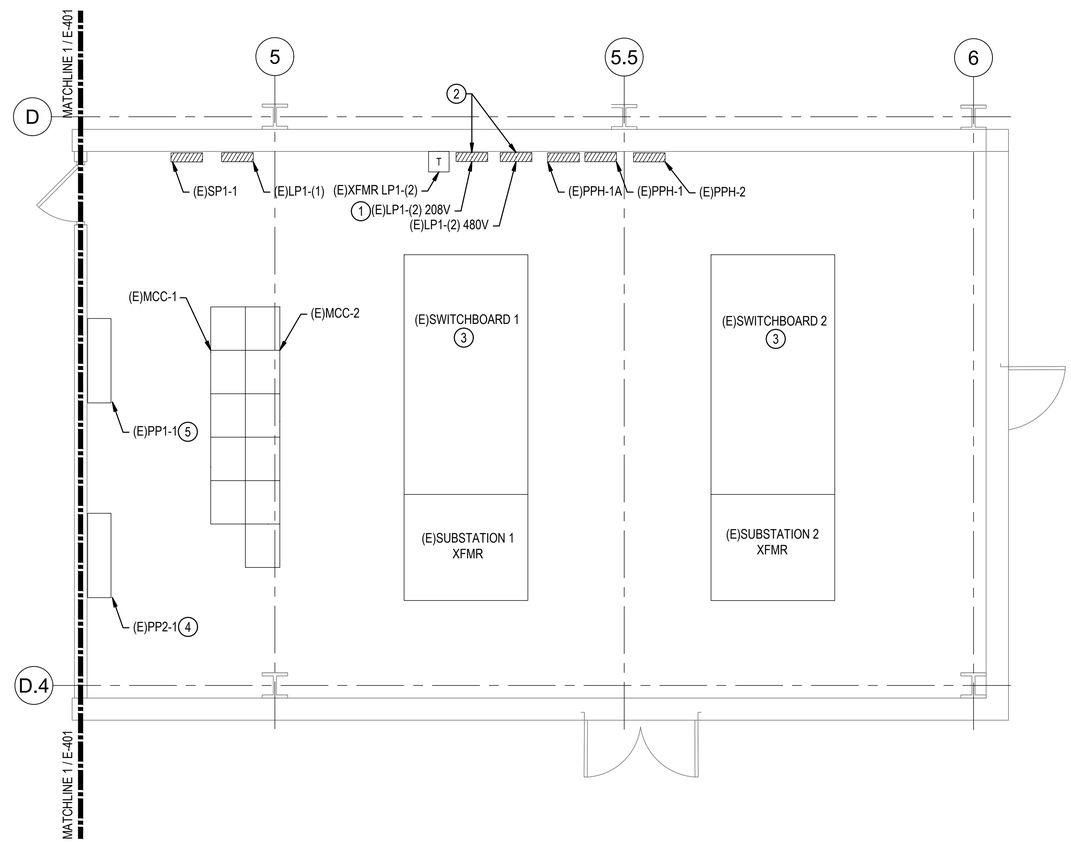

1 ELECTRICAL ROOM PLAN

1/4"=1'-0" 0 4' 8'

N

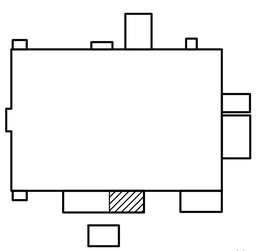

KEY PLAN

N.T.S.

N

MARK	DATE	DESCRIPTION	BY

NAVFAC

NORTH CAROLINA PROFESSIONAL SEAL 057761 ENGINEER WILLIAM E. MARCINIAK

05/04/2026

SUMMER CONSULTANTS INCORPORATED
4325 Lake Boone Trail|Suite 301|Raleigh, NC 27607
(984) 204-4500 | www.summerconsultants.com

FOR COMMANDER NAVFAC
ACTIVITY
SATISFACTORY TO DATE

DES	GB	DRW	GB	CHK	WM

<<PM/DM>> NICHOLAS A. HALL
BRANCH MANAGER PATRICK FAULKNER
CHIEF ENG/ARCH
<<XXX>>

DEPARTMENT OF THE NAVY
NAVAL FACILITIES ENGINEERING SYSTEMS COMMAND
FACILITIES ENGINEERING & ACQUISITIONS DIVISION

NAVAL FACILITIES ENGINEERING SYSTEMS COMMAND
NAVAL FACILITIES ENGINEERING SYSTEMS COMMAND - MID-ATLANTIC
MCAS CHERRY POINT - CHERRY POINT, NC

MCAS CHERRY POINT, NC
CHERRY POINT, NC
REPLACE CHILLERS & COOLING TOWER
BUILDING 4225

ELECTRICAL ROOM PLAN

SCALE: AS NOTED
EPROJECT NO.: 7440851
CONSTR. CONTR. NO.
NAVFAC DRAWING NO. 12939376
SHEET 32 OF 39

E-402

FILE NAME: 231.007 E-402.DWG
OUR REF: 231.007
PLOT DATE: 4/30/2026 3:13:21 PM

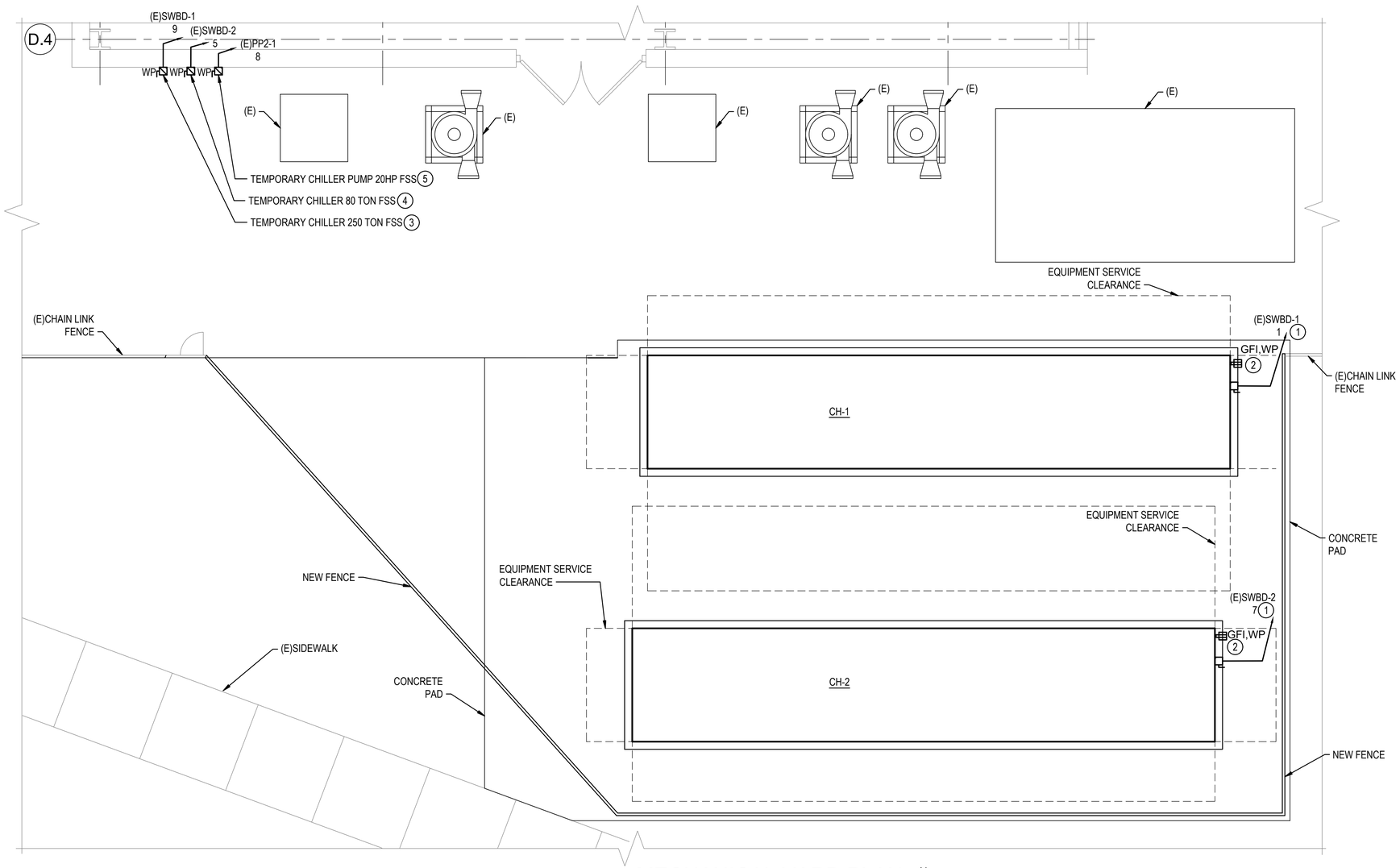

1 MECHANICAL YARD PLAN

1/4"=1'-0" 0 4' 8'

N

GENERAL NOTES

G1. ALL WORK MUST BE NEW AND PROVIDED UNDER THIS CONTRACT UNLESS SPECIFICALLY MARKED "EXISTING", "EXIST.", OR "(E)".

G2. VERIFY LOCATION AND DIMENSIONS OF EXISTING EQUIPMENT AND COORDINATE ALL WORK PRIOR TO THE START OF CONSTRUCTION.

NOTES

1. REFER TO THE MOTOR AND EQUIPMENT SCHEDULE ON SHEET E-601 FOR THE EQUIPMENT CONDUIT AND CONDUCTOR SIZES.
2. PROVIDE EQUIPMENT WITH FACTORY INSTALLED WEATHERPROOF GFI SERVICE RECEPTACLE INSTALLED AHEAD OF DISCONNECT SWITCH.
3. PROVIDE A NEMA 3R, 600A, 3P, HEAVY DUTY FUSED SAFETY SWITCH FUSED WITH 600A RK5 TYPE FUSES FOR 250 TON TEMPORARY CHILLER.
4. PROVIDE A NEMA 3R, 200A, 3P, HEAVY DUTY FUSED SAFETY SWITCH FUSED WITH 200A RK5 TYPE FUSES FOR 80 TON TEMPORARY CHILLER.
5. PROVIDE A NEMA 3R, 60A, 3P, HEAVY DUTY FUSED SAFETY SWITCH FUSED WITH 60A RK5 TYPE FUSES FOR TEMPORARY CHILLER PUMP.

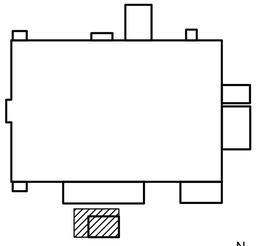

KEY PLAN
N.T.S.

N

SYM	DESCRIPTION	DATE	APPR

NAVFAC

NORTH CAROLINA PROFESSIONAL SEAL 057761 WILLIAM E. MARCINIAK ENGINEER
05/04/2026

SUMMER CONSULTANTS INCORPORATED
4325 Lake Boone Trail|Suite 301|Raleigh, NC 27607
(984) 204-4500 | www.summerconsultants.com

FOR COMMANDER NAVFAC
ACTIVITY
SATISFACTORY TO DATE
DES GB DRW GB CHK WM
<<PM/DM>> NICHOLAS A. HALL
BRANCH MANAGER PATRICK FAULKNER
CHIEF ENG/ARCH
<<XX>>

DEPARTMENT OF THE NAVY
NAVAL FACILITIES ENGINEERING SYSTEMS COMMAND
FACILITIES ENGINEERING & ACQUISITIONS DIVISION
NAVAL FACILITIES ENGINEERING SYSTEMS COMMAND - MID-ATLANTIC
MCAS CHERRY POINT - CHERRY POINT, NC
MCAS CHERRY POINT, NC
CHERRY POINT, NC
REPLACE CHILLERS & COOLING TOWER
BUILDING 4225
MECHANICAL YARD PLAN

SCALE: AS NOTED
EPROJECT NO.: 7440851
CONSTR. CONTR. NO.
NAVFAC DRAWING NO. 12939377
SHEET 33 OF 39
E-403

FILE NAME: 231.007 E-403.DWG
OUR REF: 231.007
PLOT DATE: 4/30/2026 3:13:27 PM

MOTOR AND EQUIPMENT SCHEDULE

EQUIPMENT NAME	HP	KW	RATED VOLT.	PHASE	FLA	MOTOR CONTROLLER TYPE	MOTOR CONTROLLER LOCAL CONTROL	FEEDER WIRE SETS	FEEDER WIRE NO.	FEEDER WIRE SIZE	FEEDER WIRE GRD.	FEEDER CONDUIT	LOCAL SWITCH TYPE ①	LOCAL SWITCH SIZE	LOCAL SWITCH POLES	REMARKS
CH-1	--	385	460	3Ø	519.34	INTEGRAL TO SYSTEM		2	3	350 KCMIL	#1/0	2'-1/2"	NFSS	600A	3	--
CH-2	--	385	460	3Ø	519.34	INTEGRAL TO SYSTEM		2	3	350 KCMIL	#1/0	2'-1/2"	NFSS	600A	3	--
TEMP. CHILLER 250 TON	--	293	460	3Ø	353	INTEGRAL TO SYSTEM		2	3	350 KCMIL	#1	2-1/2"	FSS	600A	3	--
TEMP. CHILLER 80 TON	--	99	460	3Ø	125	INTEGRAL TO SYSTEM		1	3	#3/0	#6	2"	FSS	200A	3	--
TEMP. CHILLER PUMP 20HP	20	--	460	3Ø	27	INTEGRAL TO SYSTEM		1	3	#4	#10	1"	FSS	60A	3	--
CWP-1	20	--	460	3Ø	27	VARIABLE FREQUENCY DRIVE		1	3	#4	#10	1"	FSS	N/A	3	③
CWP-2	20	--	460	3Ø	27	VARIABLE FREQUENCY DRIVE		1	3	#4	#10	1"	FSS	N/A	3	③
CWP-3	20	--	460	3Ø	27	VARIABLE FREQUENCY DRIVE		1	3	#4	#10	1"	FSS	N/A	3	③

NOTES:

① NFSS - NON FUSED SAFETY SWITCH
FSS - FUSED SAFETY SWITCH
MRT - MOTOR RATED TOGGLE SWITCH
INT - INTEGRAL WITH MOTOR CONTROLLER

② SEE MECHANICAL DRAWINGS FOR AUXILIARY CONTACT REQUIREMENTS.

③ PROVIDE VFD CABLING FROM VFD TO MOTOR PER SPECIFICATIONS. COORDINATE CONDUIT SIZE WITH SELECTED VFD CABLING.

GENERAL NOTES

G1. ALL WORK MUST BE NEW AND PROVIDED UNDER THIS CONTRACT UNLESS SPECIFICALLY MARKED "EXISTING", "EXIST.", OR "(E)".

G2. VERIFY LOCATION AND DIMENSIONS OF EXISTING EQUIPMENT AND COORDINATE ALL WORK PRIOR TO THE START OF CONSTRUCTION.

(E)PANEL LP1-(2) 208V

MAIN BUS SIZE (AMPS): 125 | INTERRUPT. RATING (KAIC): 10 | NEUTRAL BUS SIZE: 100% | MOUNTING TYPE: SURFACE
MAIN BUS MATERIAL: COPPER | VOLTAGE: 120 / 208 | SECTION NO.: 1 OF 1 | LOCATION: MAIN ELECTRIC ROOM
MAIN CIRCUIT BREAKER (AMPS): 50 | PHASE: 3 | WIRE: 4 | ENCLOSURE TYPE: NEMA 1 | BOLT-ON BRANCH CIRCUIT BREAKERS

CKT NO.	DESCRIPTION	LOAD TYPE	LOAD (KVA)	BREAKER AMPS	BREAKER POLES				BREAKER POLES	BREAKER AMPS	LOAD (KVA)	LOAD TYPE	DESCRIPTION	CKT NO.
1	(E)REFRIGERANT HORN	N	0.21	20	1	A			1	20	0.21	N	(E)REFRIGERANT HORN	2
3	(E)REFRIGERANT HORN	N	0.21	20	1		B		1	20	0.42	N	(E)REFRIGERANT HORN	4
5	(E)REFRIGERANT HORN	N	0.21	20	1			C	1	20	1.29	C	HEAT TRACE	6
7	(E)REFRIGERANT HORN	N	0.21	20	1	A			1	20	0.42	N	(E)EXITS LIGHTS & RECEPT.	8
9	(E)DDC CONTROL PANEL	C	0.42	20	1		B		1	20	1.00	N	(E)SCALE WATER	10
11	(E)SPACE	N	0.00	20	1			C	1	20	0.50	N	(E)LIGHTS UNDER MEZZ.	12
13	(E)SPACE	N	0.00	20	1	A			1	20	0.50	N	(E)SPORWORS I.D.S	14
15	(E)SPACE	N	0.00	20	1		B		1	20	0.00	N	(E)SPACE	16
17	(E)SPACE	N	0.00	20	1			C	1	20	0.00	N	(E)SPACE	18
19	(E)SPACE	N	0.00	20	1	A			1	20	0.00	N	(E)SPACE	20
21	(E)SPACE	N	0.00	20	1		B		1	20	0.00	N	(E)SPACE	22
23	(E)SPACE	N	0.00	20	1			C	1	20	0.00	N	(E)SPACE	24
25	(E)SPACE	N	0.00	20	1	A			1	20	0.00	N	(E)SPACE	26
27	(E)SPACE	N	0.00	20	1		B		1	20	0.00	N	(E)SPACE	28
29	(E)SPACE	N	0.00	20	1			C	1	20	0.00	N	(E)SPACE	30

CONNECTED LOAD PER PHASE (kVA) =	1.5	2.0	2.0	TOTAL CONNECTED LOAD =	5.6 KVA	15.5 AMPS
(AMPS) =	12.8	17.0	16.7	TOTAL DEMAND LOAD =	6.0 KVA	16.7 AMPS

LOAD TYPES: C = CONTINUOUS, R = RECEPTACLE, M = MOTOR, N = NON-CONTINUOUS

(E)PANEL LP1-(2) 480V

MAIN BUS SIZE (AMPS): 400 | INTERRUPT. RATING (KAIC): 18 | NEUTRAL BUS SIZE: 100% | MOUNTING TYPE: SURFACE
MAIN BUS MATERIAL: COPPER | VOLTAGE: 277 / 480 | SECTION NO.: 1 OF 1 | LOCATION: MAIN ELECTRIC ROOM
MAIN CIRCUIT BREAKER (AMPS): 250 | PHASE: 3 | WIRE: 4 | ENCLOSURE TYPE: NEMA 1 | BOLT-ON BRANCH CIRCUIT BREAKERS

CKT NO.	DESCRIPTION	LOAD TYPE	LOAD (KVA)	BREAKER AMPS	BREAKER POLES				BREAKER POLES	BREAKER AMPS	LOAD (KVA)	LOAD TYPE	DESCRIPTION	CKT NO.
1	(E)ZONE 1 - AISLE 121, RM 159	N	UNK	20	1	A			1	20	0.00	N	(E)SPARE	2
3	(E)ZONE 1 - AISLE 121, RM 160	N	UNL	20	1		B		1	20	UNK	N	(E)ZONE 6 - MACHINING/GRINDING	4
5	(E)ZONE 1 - AISLE 124, RM 132 PRODUCT	N	UNK	20	1			C	1	20	UNK	N	(E)ZONE 6 - MACHINING/GRINDING	6
7	(E)ZONE 1 - AISLE 124, RM 132 PRODUCT	N	UNK	20	1	A			1	20	UNK	N	(E)ZONE 6 - MACHINING/GRINDING	8
9	(E)ZONE 3 - AISLE 140, RM 237 PROCESS	N	UNK	20	1		B		1	20	UNK	N	(E)ZONE 5 - RM 144 WELD	10
11	(E)ZONE 4 - MIXING AREA, PAINT RM	N	UNK	20	1			C	1	20	UNK	N	(E)ZONE 5 - RM 144 WELD	12
13	(E)ZONE 3 - PREP AREA	N	UNK	20	1	A			1	20	UNK	N	(E)ZONE 6 - MACHINING/GRINDING	14
15	(E)SPARE	N	0.00	20	1		B		1	20	UNK	N	(E)ZONE 9 - RM 148 FURNACE RM	16
17	(E)ZONE 11 - RM 145	N	UNK	20	1			C	1	20	UNK	N	(E)EXISTING LOAD	18
19	(E)ZONE 13 - RM 146	N	UNK	20	1	A			1	20	UNK	N	(E)NIGHT LIGHT	20
21	(E)NIGHT LIGHT	N	UNK	20	1		B		1	20	UNK	N	(E)EMERGENCY LIGHTS	22
23	(E)SPARE	N	0.00	20	1			C	1	20	UNK	N	(E)ZONE 10 - SHIPPING	24
25	(E)EMERGENCY LIGHTS	N	UNK	20	1	A			1	20	UNK	N	(E)ZONE 9 - FURNACE	26
27		N	0.00				B		1	20	UNK	N	(E)EXISTING LOAD	28
29	SPARE	N	0.00	20	3			C			1.54	C		30
31		N	0.00			A			3	25	2.04	C	(E)PANEL LP1-(2) 208V	32
33		N	0.00				B				2.00	C		34
35	SPARE	N	0.00	20	3			C	1	--	0.00	N	(E)SPACE	36
37		N	0.00			A			1	--	0.00	N	(E)SPACE	38
39	(E)SPACE	N	0.00	--	1		B		1	--	0.00	N	(E)SPACE	40
41	(E)SPACE	N	0.00	--	1			C	1	--	0.00	N	(E)SPACE	42

LOAD REMOVED VIA DEMOLITION =	23.3 KVA	28.0 AMPS
TOTAL NET LOAD ADDED =	-23.3 KVA	-28.0 AMPS

LOAD TYPES: C = CONTINUOUS, R = RECEPTACLE, M = MOTOR, N = NON-CONTINUOUS

SYM	DESCRIPTION	DATE	APPR

NAVFAC

NORTH CAROLINA PROFESSIONAL SEAL 057761 ENGINEER WILLIAM E. MARCINIAK
05/04/2026

SUMMER CONSULTANTS INCORPORATED
4325 Lake Boone Trail|Suite 301|Raleigh, NC 27607
(984) 204-4500 | www.summerconsultants.com

FOR COMMANDER NAVFAC
ACTIVITY
SATISFACTORY TO DATE
DES GB | DRW GB | CHK WM
<<PM/DM>> NICHOLAS A. HALL
BRANCH MANAGER PATRICK FAULKNER
CHIEF ENG/ARCH
<<XXX>>

DEPARTMENT OF THE NAVY
NAVAL FACILITIES ENGINEERING SYSTEMS COMMAND
FACILITIES ENGINEERING & ACQUISITIONS DIVISION

NAVAL FACILITIES ENGINEERING SYSTEMS COMMAND - MID-ATLANTIC
MCAS CHERRY POINT - CHERRY POINT, NC

MCAS CHERRY POINT, NC
CHERRY POINT, NC
REPLACE CHILLERS & COOLING TOWER
BUILDING 4225

SCHEDULES

SCALE: AS NOTED
EPROJECT NO.: 7440851
CONSTR. CONTR. NO.
NAVFAC DRAWING NO.
12939378
SHEET 34 OF 39
E-601

FILE NAME: 231.007 E-601.DWG
OUR REF: 231.007
PLOT DATE: 4/30/2026 4:24:05 PM

(E)MCC-1 SCHEDULE

MAIN BUS SIZE (AMPS): 800	INTERRUPT. RATING (KAIC): 65		MOUNTING TYPE: FREESTANDING
MAIN BUS MATERIAL: COPPER	VOLTAGE: 277 / 480	SECTION NO.: 1 OF 1	LOCATION: MAIN ELECTRIC ROOM
	PHASE: 3 / WIRE: 4	ENCLOSURE TYPE: NEMA 1	

CKT NO.	DESCRIPTION	LOAD TYPE	LOAD (KVA)	CIRCUIT BREAKER FRAME RATING	POLES	TRIP SETTING	KAIC	TRIP UNIT			
1	(E)INCOMING	N	0.00	--	--	--	--	--	A		
		N	0.00							B	
		N	0.00								C
2	(E)EXHAUST FAN	M	UNK	15	3	15	UNK	UNK	A		
		M	UNK							B	
		M	UNK								C
3	(E)EXHAUST FAN	M	UNK	15	3	15	UNK	UNK	A		
		M	UNK							B	
		M	UNK								C
4	(E)AHU	M	UNK	40	3	40	UNK	UNK	A		
		M	UNK							B	
		M	UNK								C
5	SPARE	N	0.00	70	3	70	UNK	UNK	A		
		N	0.00							B	
		N	0.00								C
6	(E)AHU	M	UNK	70	3	70	UNK	UNK	A		
		M	UNK							B	
		M	UNK								C
7	(E)AHU	M	UNK	70	3	70	UNK	UNK	A		
		M	UNK							B	
		M	UNK								C
8	(E)AHU	M	UNK	15	3	15	UNK	UNK	A		
		M	UNK							B	
		M	UNK								C
9	(E)AHU	M	UNK	30	3	30	UNK	UNK	A		
		M	UNK							B	
		M	UNK								C
10	(E)HEAT SAVER EXHAUST	M	UNK	15	3	15	UNK	UNK	A		
		M	UNK							B	
		M	UNK								C
11	(E)HEAT SAVER EXHAUST	M	UNK	15	3	15	UNK	UNK	A		
		M	UNK							B	
		M	UNK								C
12	(E)AHU	M	UNK	50	3	50	UNK	UNK	A		
		M	UNK							B	
		M	UNK								C
13	(E)MAU-1	M	UNK	50	3	50	UNK	UNK	A		
		M	UNK							B	
		M	UNK								C
14	(E)HEAT SAVER EXHAUST	M	UNK	15	3	15	UNK	UNK	A		
		M	UNK							B	
		M	UNK								C
15	(E)MAU-2	M	UNK	UNK	3	UNK	UNK	UNK	A		
		M	UNK							B	
		M	UNK								C

LOAD TYPES: C = CONTINUOUS, R = RECEPTACLE, M = MOTOR, N = NON-CONTINUOUS

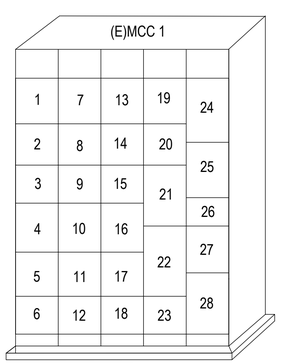

1 (E)MOTOR CONTROL CENTER FRONT
E-602 NOT TO SCALE

GENERAL NOTES

G1. ALL WORK MUST BE NEW AND PROVIDED UNDER THIS CONTRACT UNLESS SPECIFICALLY MARKED "EXISTING", "EXIST.", OR "(E)".

G2. VERIFY LOCATION AND DIMENSIONS OF EXISTING EQUIPMENT AND COORDINATE ALL WORK PRIOR TO THE START OF CONSTRUCTION.

(E)MCC-1 SCHEDULE CONT.

MAIN BUS SIZE (AMPS): 800	INTERRUPT. RATING (KAIC): 65		MOUNTING TYPE: FREESTANDING
MAIN BUS MATERIAL: COPPER	VOLTAGE: 277 / 480	SECTION NO.: 1 OF 1	LOCATION: MAIN ELECTRIC ROOM
	PHASE: 3 / WIRE: 4	ENCLOSURE TYPE: NEMA 1	

CKT NO.	DESCRIPTION	LOAD TYPE	LOAD (KVA)	CIRCUIT BREAKER FRAME RATING	POLES	TRIP SETTING	KAIC	TRIP UNIT			
16	(E)S-1	M	UNK	UNK	3	UNK	UNK	UNK	A		
		M	UNK							B	
		M	UNK								C
17	(E)EF-1	M	UNK	UNK	3	UNK	UNK	UNK	A		
		M	UNK							B	
		M	UNK								C
18	(E)ABANDONED	N	0.00	70	3	70	UNK	UNK	A		
		N	0.00							B	
		N	0.00								C
19	(E)SPARE	N	0.00	UNK	3	UNK	UNK	UNK	A		
		N	0.00							B	
		M	0.00								C
20	(E)SPARE	N	0.00	UNK	3	UNK	UNK	UNK	A		
		N	0.00							B	
		N	0.00								C
21	SPARE	N	0.00	50	3	50	UNK	UNK	A		
		N	0.00							B	
		N	0.00								C
22	(E)WATER PUMP	M	UNK	100	3	100	UNK	UNK	A		
		M	UNK							B	
		M	UNK								C
23	(E)SPACE ONLY	N	0.00	--	--	--	--	--	A		
		N	0.00							B	
		N	0.00								C
24	SPARE	N	0.00	50	3	50	UNK	UNK	A		
		N	0.00							B	
		N	0.00								C
25	(E)CHILLER OIL PUMP	M	UNK	70	3	70	UNK	UNK	A		
		M	UNK							B	
		M	UNK								C
26	(E)SPARE	N	0.00	UNK	3	UNK	UNK	UNK	A		
		N	0.00							B	
		N	0.00								C
27	(E)SPARE	N	0.00	UNK	3	UNK	UNK	UNK	A		
		N	0.00							B	
		N	0.00								C
28	(E)SPARE	N	0.00	70	3	70	UNK	UNK	A		
		N	0.00							B	
		N	0.00								C
						LOAD REMOVED VIA DEMOLITION =		59.9 KVA		72	AMPS
						TOTAL NET LOAD ADDED =		-59.9 KVA		-72	AMPS

LOAD TYPES: C = CONTINUOUS, R = RECEPTACLE, M = MOTOR, N = NON-CONTINUOUS

SYM	DESCRIPTION	DATE	APPR

NAVFAC

NORTH CAROLINA PROFESSIONAL SEAL 057761 ENGINEER WILLIAM E. MARCINIAK
05/04/2026

SUMMER CONSULTANTS INCORPORATED
4325 Lake Boone Trail|Suite 301|Raleigh, NC 27607
(984) 204-4500 | www.summerconsultants.com

FOR COMMANDER NAVFAC
ACTIVITY
SATISFACTORY TO DATE
DES XX DRW XX CHK XX
<<PM/DM>> NICHOLAS A. HALL
BRANCH MANAGER PATRICK FAULKNER
CHIEF ENG/ARCH
<<XXX>>

DEPARTMENT OF THE NAVY
NAVAL FACILITIES ENGINEERING SYSTEMS COMMAND
FACILITIES ENGINEERING & ACQUISITIONS DIVISION
NAVAL FACILITIES ENGINEERING SYSTEMS COMMAND - MID-ATLANTIC
MCAS CHERRY POINT - CHERRY POINT, NC
MCAS CHERRY POINT, NC
CHERRY POINT, NC
REPLACE CHILLERS & COOLING TOWER
BUILDING 4225
PANEL SCHEDULES

SCALE: AS NOTED
EPROJECT NO.: 7440851
CONSTR. CONTR. NO.
NAVFAC DRAWING NO. 12939379
SHEET 35 OF 39
E-602

FILE NAME: 231.007 E-602.DWG
OUR REF: 231.007
PLOT DATE: 4/30/2026 4:24:06 PM

(E)MCC-2 SCHEDULE

MAIN BUS SIZE (AMPS): 800	INTERRUPT. RATING (KAIC): 65		MOUNTING TYPE: FREESTANDING
MAIN BUS MATERIAL: COPPER	VOLTAGE: 277 / 480	SECTION NO.: 1 OF 1	LOCATION: MAIN ELECTRIC ROOM
	PHASE: 3 WIRE: 4	ENCLOSURE TYPE: NEMA 1	

CKT NO.	DESCRIPTION	LOAD TYPE	LOAD (KVA)	CIRCUIT BREAKER FRAME RATING	POLES	TRIP SETTING	KAIC	TRIP UNIT			
1	(E)SPARE	N	0.00	50	3	50	UNK	UNK	A		
		N	0.00							B	
		N	0.00								C
2	SPARE	N	0.00	70	3	70	UNK	UNK	A		
		N	0.00							B	
		N	0.00								C
3	(E)HV-1	M	UNK	50	3	50	UNK	UNK	A		
		M	UNK							B	
		M	UNK								C
4	(E)SPARE	N	0.00	50	3	50	UNK	UNK	A		
		N	0.00							B	
		N	0.00								C
5	(E)HW CIRC PUMP	M	UNK	70	3	70	UNK	UNK	A		
		M	UNK							B	
		M	UNK								C
6	(E)HW CIRC PUMP	M	UNK	15	3	15	UNK	UNK	A		
		M	UNK							B	
		M	UNK								C
7	(E)VEF-1	M	UNK	15	3	15	UNK	UNK	A		
		M	UNK							B	
		M	UNK								C
8	(E)PANEL PPH-2	N	UNK	50	3	50	UNK	UNK	A		
		N	UNK							B	
		N	UNK								C
9	(E)COOLING TOWER	M	UNK	50	3	50	UNK	UNK	A		
		M	UNK							B	
		M	UNK								C
10	(E)CTWP	M	UNK	50	3	50	UNK	UNK	A		
		M	UNK							B	
		M	UNK								C
11	SPARE	N	0.00	50	3	50	UNK	UNK	A		
		N	0.00							B	
		N	0.00								C
12	SPARE	N	0.00	70	3	70	UNK	UNK	A		
		N	0.00							B	
		N	0.00								C
13	(E)HWP-1	M	UNK	15	3	15	UNK	UNK	A		
		M	UNK							B	
		M	UNK								C
14	SPARE	N	0.00	70	3	70	UNK	UNK	A		
		N	0.00							B	
		N	0.00								C
15	(E)WATER PUMP	M	UNK	100	3	100	UNK	UNK	A		
		M	UNK							B	
		M	UNK								C
16	(E)AHU	M	UNK	50	3	50	UNK	UNK	A		
		M	UNK							B	
		M	UNK								C
17	(E)AHU	M	UNK	15	3	15	UNK	UNK	A		
		M	UNK							B	
		M	UNK								C
18	(E)AHU	M	UNK	15	3	15	UNK	UNK	A		
		M	UNK							B	
		M	UNK								C
19	(E)SPARE	N	0.00	50	3	50	UNK	UNK	A		
		N	0.00							B	
		N	0.00								C
20	(E)BLEND	M	UNK	15	3	15	UNK	UNK	A		
		M	UNK							B	
		M	UNK								C
21	(E)AHU	M	UNK	15	3	15	UNK	UNK	A		
		M	UNK							B	
		M	UNK								C

LOAD TYPES: C = CONTINUOUS, R = RECEPTACLE, M = MOTOR, N = NON-CONTINUOUS

(E)MCC-2 SCHEDULE CONT.

MAIN BUS SIZE (AMPS): 800	INTERRUPT. RATING (KAIC): 65		MOUNTING TYPE: FREESTANDING
MAIN BUS MATERIAL: COPPER	VOLTAGE: 277 / 480	SECTION NO.: 1 OF 1	LOCATION: MAIN ELECTRIC ROOM
	PHASE: 3 WIRE: 4	ENCLOSURE TYPE: NEMA 1	

CKT NO.	DESCRIPTION	LOAD TYPE	LOAD (KVA)	CIRCUIT BREAKER FRAME RATING	POLES	TRIP SETTING	KAIC	TRIP UNIT			
22	(E)AHU	M	UNK	70	3	70	UNK	UNK	A		
		M	UNK							B	
		M	UNK								C
23	(E)AHU	M	UNK	15	3	15	UNK	UNK	A		
		M	UNK							B	
		M	UNK								C
24	(E)AHU	M	UNK	15	3	15	UNK	UNK	A		
		M	UNK							B	
		M	UNK								C
25	(E)AHU	M	UNK	50	3	50	UNK	UNK	A		
		M	UNK							B	
		M	UNK								C
26	(E)HEAT SAVER SUPPLY FAN	M	UNK	15	3	15	UNK	UNK	A		
		M	UNK							B	
		M	UNK								C
27	(E)HEAT SAVER SUPPLY FAN	M	UNK	15	3	15	UNK	UNK	A		
		M	UNK							B	
		M	UNK								C
28	(E)INCOMING	N	0.00	--	--	--	--	--	A		
		N	0.00							B	
		N	0.00								C
29	(E)EXHAUST FAN	M	UNK	30	3	30	UNK	UNK	A		
		M	UNK							B	
		M	UNK								C
30	(E)SPARE	N	0.00	70	3	70	UNK	UNK	A		
		N	0.00							B	
		N	0.00								C
31	SPARE	N	0.00	50	3	50	UNK	UNK	A		
		N	0.00							B	
		N	0.00								C
32	(E)EF-2	M	UNK	15	3	15	UNK	UNK	A		
		M	UNK							B	
		M	UNK								C

LOAD REMOVED VIA DEMOLITION =	150.5 KVA	181	AMPS
TOTAL NET LOAD ADDED =	-150.5 KVA	-181	AMPS

LOAD TYPES: C = CONTINUOUS, R = RECEPTACLE, M = MOTOR, N = NON-CONTINUOUS

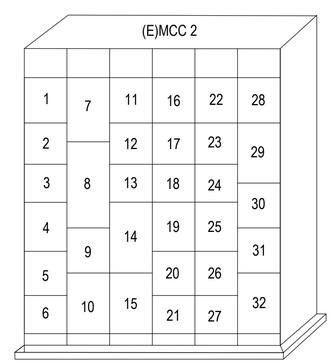

1 (E)MOTOR CONTROL CENTER FRONT
E-602 NOT TO SCALE

GENERAL NOTES

G1. ALL WORK MUST BE NEW AND PROVIDED UNDER THIS CONTRACT UNLESS SPECIFICALLY MARKED "EXISTING", "EXIST.", OR "(E)".

G2. VERIFY LOCATION AND DIMENSIONS OF EXISTING EQUIPMENT AND COORDINATE ALL WORK PRIOR TO THE START OF CONSTRUCTION.

SYM	DESCRIPTION	DATE	APPR

NAVFAC

NORTH CAROLINA PROFESSIONAL SEAL 057761 ENGINEER WILLIAM E. MARCINIAK
05/04/2026

SUMMER CONSULTANTS INCORPORATED
4325 Lake Boone Trail|Suite 301|Raleigh, NC 27607
(984) 204-4500 | www.summerconsultants.com

FOR COMMANDER NAVFAC
ACTIVITY
SATISFACTORY TO DATE
DES XX DRW XX CHK XX
<<PM/DM>> NICHOLAS A. HALL
BRANCH MANAGER PATRICK FAULKNER
CHIEF ENG/ARCH
<<XXX>>

DEPARTMENT OF THE NAVY
NAVAL FACILITIES ENGINEERING SYSTEMS COMMAND
FACILITIES ENGINEERING & ACQUISITIONS DIVISION
NAVAL FACILITIES ENGINEERING SYSTEMS COMMAND - MID-ATLANTIC
MCAS CHERRY POINT - CHERRY POINT, NC
MCAS CHERRY POINT, NC
CHERRY POINT, NC
REPLACE CHILLERS & COOLING TOWER
BUILDING 4225
PANEL SCHEDULES

SCALE: AS NOTED
EPROJECT NO.: 7440851
CONSTR. CONTR. NO.
NAVFAC DRAWING NO. 12939380
SHEET 36 OF 39
E-603

FILE NAME: 231.007 E-603.DWG
OUR REF: 231.007
PLOT DATE: 4/30/2026 3:13:36 PM

GENERAL NOTES

G1. ALL WORK MUST BE NEW AND PROVIDED UNDER THIS CONTRACT UNLESS SPECIFICALLY MARKED "EXISTING", "EXIST.", OR "(E)".

G2. VERIFY LOCATION AND DIMENSIONS OF EXISTING EQUIPMENT AND COORDINATE ALL WORK PRIOR TO THE START OF CONSTRUCTION.

(E)SWBD-2 SCHEDULE

MAIN BUS SIZE (AMPS): 4000 | INTERRUPT. RATING (KAIC): 100 | MOUNTING TYPE: FREESTANDING
MAIN BUS MATERIAL: COPPER | VOLTAGE: 277 / 480 | SECTION NO.: 1 OF 1 | LOCATION: MAIN ELECTRIC ROOM
PHASE: 3 | WIRE: 4 | ENCLOSURE TYPE: NEMA 1

CKT NO.	DESCRIPTION	LOAD TYPE	LOAD (KVA)	CIRCUIT BREAKER FRAME RATING	POLES	TRIP SETTING	KAIC	TRIP UNIT			
1	(E)A-4-1	N	UNK	800	3	800	65	LSIG	A		
		N	UNK							B	
		N	UNK								C
2	(E)FUR, A	N	UNK	800	3	800	65	LSIG	A		
		N	UNK							B	
		N	UNK								C
3	(E)NO LABEL	N	UNK	400	3	400	65	LSIG	A		
		N	UNK							B	
		N	UNK								C
4	(E)FUR, F	N	UNK	800	3	800	65	LSIG	A		
		N	UNK							B	
		N	UNK								C
5	TEMPORARY CHILLER 80 TON FSS	M	33.21	200	3	200	65	LSI	A		
		M	33.21							B	
		M	33.21								C
6	(E)FUR, B	N	UNK	800	3	800	65	LSIG	A		
		N	UNK							B	
		N	UNK								C
7	CH-2	M	137.7	800	3	800	65	LSIG	A		
		M	137.7							B	
		M	137.7								C
8	(E)MCC-2	N	UNK	800	3	800	65	LSIG	A		
		N	UNK							B	
		N	UNK								C
9	(E)A-2	N	UNK	800	3	800	65	LSIG	A		
		N	UNK							B	
		N	UNK								C
10	(E)A-4-2	N	UNK	800	3	800	65	LSIG	A		
		N	UNK							B	
		N	UNK								C
11	(E)PP2-1	N	118.20	800	3	800	65	LSIG	A		
		N	118.20							B	
		N	118.20								C
M	(E)MAIN CIRCUIT BREAKER	N	0.00	4000A	3	4000A	100	LSIG	A		
		N	0.00							B	
		N	0.00								C

ADDED CONNECTED LOAD PER PHASE (kVA) =	289.1	289.1	289.1	TOTAL ADDED CONNECTED LOAD =	512.7 KVA / 617 AMPS
(AMPS) =	1044	1044	1044	TOTAL ADDED DEMAND LOAD =	434.6 KVA / 523 AMPS
				LOAD REMOVED VIA DEMOLITION =	380.0 KVA / 457 AMPS
				TOTAL NET LOAD ADDED =	54.6 KVA / 66 AMPS

LOAD TYPES: C = CONTINUOUS, R = RECEPTACLE, M = MOTOR, N = NON-CONTINUOUS

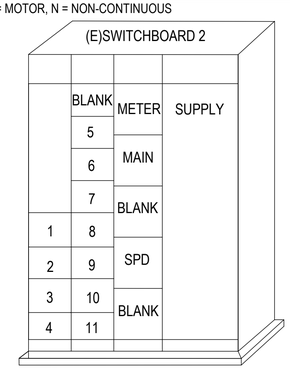

2 (E)SWITCHBOARD 2
NOT TO SCALE

(E)SWBD-1 SCHEDULE

MAIN BUS SIZE (AMPS): 4000 | INTERRUPT. RATING (KAIC): 100 | MOUNTING TYPE: FREESTANDING
MAIN BUS MATERIAL: COPPER | VOLTAGE: 277 / 480 | SECTION NO.: 1 OF 1 | LOCATION: MAIN ELECTRIC ROOM
PHASE: 3 | WIRE: 4 | ENCLOSURE TYPE: NEMA 1

CKT NO.	DESCRIPTION	LOAD TYPE	LOAD (KVA)	CIRCUIT BREAKER FRAME RATING	POLES	TRIP SETTING	KAIC	TRIP UNIT			
M	(E)MAIN CIRCUIT BREAKER	N	0.00	4000A	3	4000A	100	LSIG	A		
		N	0.00							B	
		N	0.00								C
1	CH-1	M	137.7	800	3	800	65	LSIG	A		
		M	137.7							B	
		M	137.7								C
2	(E)FUR, C	N	UNK	800	3	800	65	LSIG	A		
		N	UNK							B	
		N	UNK								C
3	(E)HY,FL GAS CLEAN SYS	N	UNK	800	3	800	65	LSIG	A		
		N	UNK							B	
		N	UNK								C
4	(E)MCC-1	N	UNK	800	3	800	65	LSIG	A		
		N	UNK							B	
		N	UNK								C
5	(E)MCC-4	N	UNK	800	3	800	65	LSIG	A		
		N	UNK							B	
		N	UNK								C
6	(E)FUR, E	N	UNK	800	3	800	65	LSIG	A		
		N	UNK							B	
		N	UNK								C
7	(E)FUR, D	N	UNK	800	3	800	65	LSIG	A		
		N	UNK							B	
		N	UNK								C
8	(E)A-1	N	UNK	800	3	800	65	LSIG	A		
		N	UNK							B	
		N	UNK								C
9	TEMPORARY CHILLER 250 TON FSS	M	93.85	600	3	600	65	LSI	A		
		M	93.85							B	
		M	93.85								C
10	(E)PP1-1	N	117.7	800	3	800	65	LSIG	A		
		N	117.7							B	
		N	117.7								C
11	(E)A-3	N	UNK	800	3	800	65	LSIG	A		
		N	UNK							B	
		N	UNK								C

ADDED CONNECTED LOAD PER PHASE (kVA) =	349.3	349.3	349.3	TOTAL ADDED CONNECTED LOAD =	737.7 KVA / 888 AMPS
(AMPS) =	1261	1261	1261	TOTAL ADDED DEMAND LOAD =	456.1 KVA / 549 AMPS
				LOAD REMOVED VIA DEMOLITION =	266.1 KVA / 320 AMPS
				TOTAL NET LOAD ADDED =	190.0 KVA / 229 AMPS

LOAD TYPES: C = CONTINUOUS, R = RECEPTACLE, M = MOTOR, N = NON-CONTINUOUS

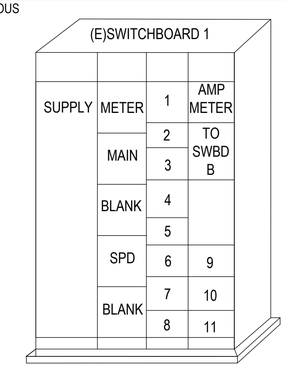

1 (E)SWITCHBOARD 1
NOT TO SCALE

ATPR	DATE	DESCRIPTION	CTM

NAVFAC

NORTH CAROLINA PROFESSIONAL SEAL 057761 ENGINEER WILLIAM E. MARCINIAK
05/04/2026

SUMMER CONSULTANTS INCORPORATED
4325 Lake Boone Trail|Suite 301|Raleigh, NC 27607
(984) 204-4500 | www.summerconsultants.com

FOR COMMANDER NAVFAC
ACTIVITY
SATISFACTORY TO DATE
DES XX | DRW XX | CHK XX
<<PM/DM>> NICHOLAS A. HALL
BRANCH MANAGER PATRICK FAULKNER
CHIEF ENG/ARCH
<<XXX>>

DEPARTMENT OF THE NAVY
NAVAL FACILITIES ENGINEERING SYSTEMS COMMAND
FACILITIES ENGINEERING & ACQUISITIONS DIVISION
MCAS CHERRY POINT, NC

NAVAL FACILITIES ENGINEERING SYSTEMS COMMAND - MID-ATLANTIC
MCAS CHERRY POINT - CHERRY POINT, NC

REPLACE CHILLERS & COOLING TOWER
BUILDING 4225
CHERRY POINT, NC

PANEL SCHEDULES

SCALE: AS NOTED
EPROJECT NO.: 7440851
CONSTR. CONTR. NO.
NAVFAC DRAWING NO. 12939381
SHEET 37 OF 39
E-604

FILE NAME: 231.007 E-604.DWG
OUR REF: 231.007
PLOT DATE: 4/30/2026 3:13:37 PM

GENERAL NOTES

G1. ALL WORK MUST BE NEW AND PROVIDED UNDER THIS CONTRACT UNLESS SPECIFICALLY MARKED "EXISTING", "EXIST.", OR "(E)".

G2. VERIFY LOCATION AND DIMENSIONS OF EXISTING EQUIPMENT AND COORDINATE ALL WORK PRIOR TO THE START OF CONSTRUCTION.

(E)PANEL PP2-1

MAIN BUS SIZE (AMPS): 800	INTERRUPT. RATING (KAIC): 65	NEUTRAL BUS SIZE: 100%	MOUNTING TYPE: SURFACE
MAIN BUS MATERIAL: COPPER	VOLTAGE: 277 / 480	SECTION NO.: 1 OF 1	LOCATION: MAIN ELECTRIC ROOM
MAIN CIRCUIT BREAKER (AMPS): MLO	PHASE: 3 WIRE: 4	ENCLOSURE TYPE: NEMA 1	BOLT-ON BRANCH CIRCUIT BREAKERS

CKT NO.	DESCRIPTION	LOAD TYPE	LOAD (KVA)	BREAKER AMPS	BREAKER POLES				BREAKER POLES	BREAKER AMPS	LOAD (KVA)	LOAD TYPE	DESCRIPTION	CKT NO.
1		M	7.17			A					0.00	N		2
3	CWP-3	M	7.17	60	3		B		3	400	0.00	N	(E)TEMP AIR COMP	4
5		M	7.17					C			0.00	N		6
7		N	16.60			A					7.17	N		8
9	(E)AC-1	N	16.60	125	3		B		3	60	7.17	N	TEMPORARY CHILLER PUMP 20HP	10
11		N	16.60					C			7.17	N		12
13		N	3.30			A					3.20	N		14
15	(E)AIR DRYER, AD-2	N	3.30	20	3		B		3	20	3.20	N	(E)BASIN HEATER	16
17		N	3.30					C			3.20	N		18
19		N	9.40			A					0.00	N		20
21	(E)ELEVATOR RM 112	N	9.40	70	3		B		3	--	0.00	N	(E)SPACE	22
23		N	9.40					C			0.00	N		24
25		N	2.83			A					3.04	N		26
27	(E)EF 22-452	N	2.83	15	3		B		3	20	3.04	N	(E)OVERHEAD DOOR COL A-5	28
29		N	2.83					C			3.04	N		30
31		N	0.94			A					3.04	N		32
33	(E)EF 22-473	N	0.94	15	3		B		3	20	3.04	N	(E)OVERHEAD DOOR COL A-6	34
35		N	0.94					C			3.04	N		36
37		N	0.00			A					27.70	N		38
39	(E)SPACE	N	0.00	--	3		B		3	150	27.70	N	(E)LP1-1	40
41		N	0.00					C			27.70	N		42
43		N	0.00			A					33.80	N		44
45	(E)SPARE	N	0.00	200	3		B		3	225	33.80	N	(E)LP1-2	46
47		N	0.00					C			33.80	N		48

CONNECTED LOAD PER PHASE (kVA) =	118.2	118.2	118.2	TOTAL CONNECTED LOAD =	354.6 KVA	426.7 AMPS
(AMPS) =	426.7	426.7	426.7	TOTAL DEMAND LOAD =	359.9 KVA	433.1 AMPS

LOAD TYPES: C = CONTINUOUS, R = RECEPTACLE, M = MOTOR, N = NON-CONTINUOUS

(E)PANEL PP1-1

MAIN BUS SIZE (AMPS): 800	INTERRUPT. RATING (KAIC): 65	NEUTRAL BUS SIZE: 100%	MOUNTING TYPE: SURFACE
MAIN BUS MATERIAL: COPPER	VOLTAGE: 277 / 480	SECTION NO.: 1 OF 1	LOCATION: MAIN ELECTRIC ROOM
MAIN CIRCUIT BREAKER (AMPS): MLO	PHASE: 3 WIRE: 4	ENCLOSURE TYPE: NEMA 1	BOLT-ON BRANCH CIRCUIT BREAKERS

CKT NO.	DESCRIPTION	LOAD TYPE	LOAD (KVA)	BREAKER AMPS	BREAKER POLES				BREAKER POLES	BREAKER AMPS	LOAD (KVA)	LOAD TYPE	DESCRIPTION	CKT NO.
1		N	16.60			A					16.60	N		2
3	(E)AC-3	N	16.60	125	3		B		3	125	16.60	N	(E)AC-2	4
5		N	16.60					C			16.60	N		6
7		N	3.30			A					3.20	N		8
9	(E)AIR DRYER, AD-1	N	3.30	20	3		B		3	20	3.20	N	(E)BASIN HEATER	10
11		N	3.30					C			3.20	N		12
13		N	0.00			A					15.50	N		14
15	(E)SPACE	N	0.00	--	3		B		3	70	15.50	N	(E)TRANSFORMER SP1-1	16
17		N	0.00					C			15.50	N		18
19		N	3.04			A					6.60	N		20
21	(E)OVERHEAD DOOR COL A-1	N	3.04	20	3		B		3	30	6.60	N	(E)30-1	22
23		N	3.04					C			6.60	N		24
25		N	13.30			A					3.04	N		26
27	(E)WELDING ROOM 131	N	13.30	60	3		B		3	20	3.04	N	(E)OVERHEAD DOOR COL B-9	28
29		N	13.30					C			3.04	N		30
31		M	7.17			A					11.10	N		32
33	CWP-1	M	7.17	60	3		B		3	50	11.10	N	(E)50-1	34
35		M	7.17					C			11.10	N		36
37		M	7.17			A					11.10	N		38
39	CWP-2	M	7.17	60	3		B		3	50	11.10	N	(E)50-2	40
41		M	7.17					C			11.10	N		42

CONNECTED LOAD PER PHASE (kVA) =	117.7	117.7	117.7	TOTAL CONNECTED LOAD =	353.2 KVA	425.0 AMPS
(AMPS) =	425.0	425.0	425.0	TOTAL DEMAND LOAD =	358.5 KVA	431.5 AMPS

LOAD TYPES: C = CONTINUOUS, R = RECEPTACLE, M = MOTOR, N = NON-CONTINUOUS

SYM	DESCRIPTION	DATE	APPR

NAVFAC

NORTH CAROLINA PROFESSIONAL SEAL 057761 ENGINEER WILLIAM E. MARCINIAK
05/04/2026

SUMMER CONSULTANTS INCORPORATED
4325 Lake Boone Trail|Suite 301|Raleigh, NC 27607
(984) 204-4500 | www.summerconsultants.com

FOR COMMANDER NAVFAC
ACTIVITY
SATISFACTORY TO DATE

DES XX	DRW XX	CHK XX

<<PM/DM>> NICHOLAS A. HALL
BRANCH MANAGER PATRICK FAULKNER
CHIEF ENG/ARCH
<<XXX>>

DEPARTMENT OF THE NAVY
NAVAL FACILITIES ENGINEERING SYSTEMS COMMAND
FACILITIES ENGINEERING & ACQUISITIONS DIVISION

NAVAL FACILITIES ENGINEERING SYSTEMS COMMAND - MID-ATLANTIC
MCAS CHERRY POINT - CHERRY POINT, NC

MCAS CHERRY POINT, NC
CHERRY POINT, NC
REPLACE CHILLERS & COOLING TOWER
BUILDING 4225

PANEL SCHEDULES

SCALE: AS NOTED
EPROJECT NO.: 7440851
CONSTR. CONTR. NO.
NAVFAC DRAWING NO. 12939382
SHEET 38 OF 39
E-605

FILE NAME: 231.007 E-605.DWG
OUR REF: 231.007
PLOT DATE: 4/30/2026 3:13:37 PM

GENERAL NOTES

G1. ALL WORK MUST BE NEW AND PROVIDED UNDER THIS CONTRACT UNLESS SPECIFICALLY MARKED "EXISTING", "EXIST.", OR "(E)".

G2. VERIFY LOCATION AND DIMENSIONS OF EXISTING EQUIPMENT AND COORDINATE ALL WORK PRIOR TO THE START OF CONSTRUCTION.

NOTES

1. REFER TO THE MOTOR AND EQUIPMENT SCHEDULE ON SHEET E-601 FOR CONDUCTOR AND CONDUIT SIZE.
2. EXISTING SERVICE INFORMATION UNKNOWN. AVAILABLE FAULT CURRENT BASED ON INFINITE BUS AT THE SUBSTATION TRANSFORMERS.

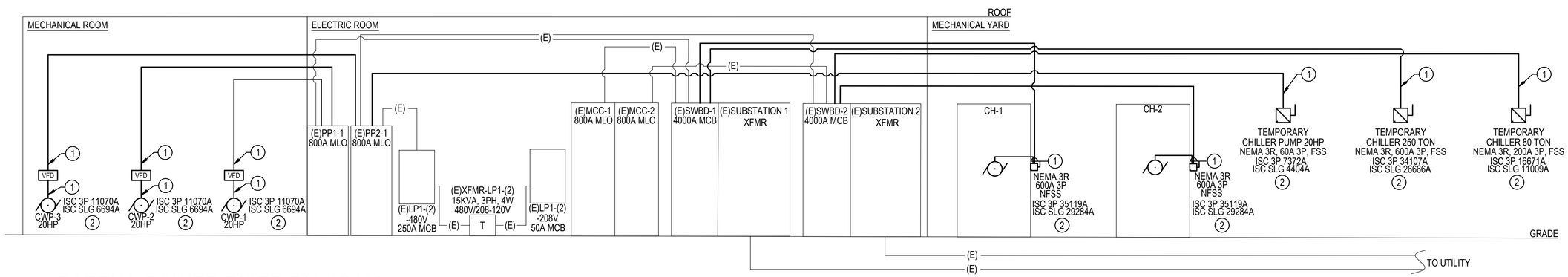

1 PARTIAL POWER RISER DIAGRAM

NOT TO SCALE

SYM	DESCRIPTION	DATE	APPR

NAVFAC

NORTH CAROLINA PROFESSIONAL SEAL 057761 ENGINEER WILLIAM E. MARCINIAK

05/04/2026

SUMMER CONSULTANTS INCORPORATED
4325 Lake Boone Trail|Suite 301|Raleigh, NC 27607
(984) 204-4500 | www.summerconsultants.com

FOR COMMANDER NAVFAC
ACTIVITY
SATISFACTORY TO DATE

DES XX	DRW XX	CHK XX

<<PM/DM>> NICHOLAS A. HALL
BRANCH MANAGER PATRICK FAULKNER
CHIEF ENG/ARCH
<<XXX>>

DEPARTMENT OF THE NAVY
NAVAL FACILITIES ENGINEERING SYSTEMS COMMAND
FACILITIES ENGINEERING & ACQUISITIONS DIVISION

NAVAL FACILITIES ENGINEERING SYSTEMS COMMAND
MCAS CHERRY POINT - CHERRY POINT, NC

MCAS CHERRY POINT, NC
CHERRY POINT, NC
REPLACE CHILLERS & COOLING TOWER
BUILDING 4225

PARTIAL POWER RISER DIAGRAM

SCALE: AS NOTED
EPROJECT NO.: 7440851
CONSTR. CONTR. NO.
NAVFAC DRAWING NO. 12939383
SHEET 39 OF 39
E-606

FILE NAME: 231.007 E-606.DWG
OUR REF: 231.007
PLOT DATE: 4/30/2026 3:13:38 PM