DEFENSE LOGISTICS AGENCY
AVIATION AT OKLAHOMA CITY
3001 STAFF DRIVE SUITE 2AG1 109B
TINKER AIR FORCE BASE, OKLAHOMA 73145-3015

23 June 2026

IN REPLY
REFER TO: DLA Aviation-AOBA
Micah Miller

Hamilton Sundstrand Corporation (73030)
DBA Collins Aerospace
1 HAMILTON RD
WINDSOR LOCKS, CT 06096-1010
UNITED STATES

SUBJECT: Letter RFQ Solicitation Number - SPRTA1-26-R-0330

Dear Contractor;

This solicitation is issued for acquiring supplies identified on Page 2. Please provide your best price and delivery proposal for the part number based on best estimated quantity (BEQ) listed. Price and delivery proposals may be negotiated upon closing of this solicitation. The inspection and acceptance point will be at origin with FOB origin. Electronic submission is acceptable.

This correspondence constitutes a letter solicitation as these items are intended to be ordered as firm, fixed price, against the Basic Ordering Agreement, SPRPA1-19-G-CE01.

Please provide your proposal at your earliest convenience, but no later than **23 July 2026**. If you have any questions or need more information, please contact me at micah.miller.5@us.af.mil. Thank you for your time.

Best Regards,

Micah Miller
Contracting Specialist
Defense Logistics Agency Procurement Operations
3001 Staff Drive, Suite 2B95
Tinker AFB OK 73145

This is an USAF requirement. Purchase Request (PR) FD2030-26-00883 is in support of the B-52 aircraft.

Cage Code	P/N	NSN	PART NAME	MIN	BEQ	MAX
73030	10-30756-501	1660011680330	Control, Box, Electric	2 EA	6 EA	9 EA

IUID: *****DOES APPLY***

IUID Guidance: (See attached IUID Checklist).

Inspection: Origin

Acceptance: Origin

Insection/Acceptance Report: Receiving Report Required.

Quality Assurance: Standard Inspection: FAR 52.246-2,-3,-4,-5 OR -6 as applicable to the contract

Delivery: Deliver 6 unit(s) on or before 31 DEC 2027. Early delivery is acceptable at no additional expense to the government.

SHIP TO (CUSTOMER): SW3211.

MARK FOR: ACCT 09.

ATTACHMENTS:

NOTE 1—Packaging to be accomplished IAW the attached packaging requirements.

NOTE 2—Transportation to be accomplished IAW the attached transportation documents.

NOTE 3—EO_2011C0941-T to be accomplished IAW the Engineering Order document.

NOTE 4—IUID to be accomplished IAW with the attached IUID checklist.

PACKAGING REQUIREMENTS

PURCHASE INSTRUMENT NUMBER: FD20302600883-00	**VERSION:** 1
MIL-STD 129 REVISION: R	**MIL-STD 2073-1 REVISION:** E

THE FOLLOWING STATEMENT IS IN COMPLIANCE WITH THE UNITED NATIONS-IMPLEMENTED RESTRICTIONS ON WOOD PACKAGING MATERIAL (WPM). THIS REQUIREMENT IS SPECIFICALLY CONCERNED WITH INVASIVE SPECIES SUCH AS THE PINEWOOD NEMATODE. WPM IS DEFINED AS WOOD PALLETS, SKIDS, LOAD BOARDS, PALLET COLLARS, WOODEN BOXES, REELS, DUNNAGE, CRATES, FRAMES, AND CLEATS. THE STATEMENT BELOW CITES THE REQUIREMENTS IN DETAIL AND COVERS LUMBER FOR BUILDING CONTAINERS AND PALLETS USED FOR DELIVERIES RESULTING IN SHIPMENTS WORLDWIDE (DIRECT, OR THROUGH AIR LOGISTICS CENTERS (ALC), CONTAINER CONSOLIDATION POINTS (CCP), OR OTHER BASES). WOODEN LUMBER, WOODEN PALLET AND PACKAGING/CONTAINER STATEMENT:
ALL WOODEN LUMBER, WOODEN PALLET'S, AND WOODEN CONTAINERS PRODUCED ENTIRELY OR IN PART OF WOOD PACKING MATERIAL (WPM) SHALL BE CONSTRUCTED FROM DEBARKED WOOD IN ADDITION TO THE APPLICATION OF HEAT-TREATED (HT) MATERIAL (HT TO 56 DEGREES CENTIGRADE OR 133 DEGREES FAHRENHEIT FOR 30 MINUTES). CERTIFICATION/MARKING IS REQUIRED BY AN ACCREDITED AGENCY RECOGNIZED BY THE AMERICAN LUMBER STANDARDS COMMITTEE (ALSC). FOR REFERENCE DOCUMENTATION, SEE LATEST REVISION OF "INTERNATIONAL STANDARDS FOR PHYTOSANITARY MEASURES" (ISPM)NO.15), "REGULATION OF WOOD PACKAGING MATERIAL IN INTERNATIONAL TRADE."

PACRN:	PACKAGING REQUIREMENT:	PRESERVATION LEVEL:	PACKAGING LEVEL:	SPI:	SPI REV:	SPI DATE:
AAA	MIL Long Line Packaging	MIL	B			

ITEM(S):

1660011680330

CODED DATA:

QUP	ICQ	PRES METH	CD	PRES MTL	WRAP MTL	CUSH DUNN	CT	UNIT CONT	INT CONT	UCL	SPEC MKG	UNIT PACK WEIGHT	UNIT PACK LENGTH	UNIT PACK WIDTH	UNIT PACK DEPTH	UNIT PACK CUBE	OPI
1	000	GX	1	00	K3	NB	A	NV	00	B	39	31.00	21.0	15.0	9.5	1.732	M

ADDITIONAL PACKAGING AND CONTAINER MARKING REQUIREMENTS:

SUPPLEMENTAL PACKAGING INSTRUCTION TEXT:

VENDOR PACKAGING INSTRUCTIONS:

Military Packaging and Marking
Items shall be packaged in accordance with MIL-STD-2073-1, Standard Practice for Military Packaging. Shipping and storage markings shall be in accordance with MIL-STD-129, Standard Practice for Military Marking.

Shipping Container Marking
Shipping containers shall be marked meeting the following criteria: (a) MIL-STD-129, Standard Practice for Military Marking. (b) Additional marking and/or bar coding requirements exceeding those of MIL-STD-129 (e.g., unit serial numbers, original equipment manufacturers (OEM) name, or OEM model number, as specified on the AFMC Form 158.

ORGANIZATION / OFFICE SYMBOL:	PACKAGING SPECIALIST:	PHONE NUMBER:	SIGNATURE:	DATE:
406 SCMS / GULAA	Davis, Richard R	405-371-9037 / 582-5972	//SIGNED//Davis, Richard R	26056 - 25 FEB 2026

TRANSPORTATION DATA FOR SOLICITATIONS

PURCHASE INSTRUMENT NUMBER:	DATE INITIATED:
FD20302600883-00	25 FEB 2026

COMMODITY: See Continuation

STOCK NUMBER: See Continuation

F.O.B. TERMS RECOMMENDED AS BEST SUITED FOR THIS PROCUREMENT

[X] ORIGIN [ ] DESTINATION [ ] OTHER *(Specify)* [ ] DATA / FIRST ARTICLE F.O.B. DESTINATION

TRANSPORTATION PROVISIONS / CLAUSES	FAR CITATION
F.O.B. Origin	52.247-29
Freight Classification Description	52.247-53
Marking of Shipments	47.305-10
Contact DCMA Transportation Contact DCMA Transportation on ALL "DCMA Administered" contracts prior to shipment for shipping instructions using the DCMA Shipment Instruction Request (SIR) eTool System, at http://www.dcma.mil <http://www.dcma.mil/> for ALL FOB: Origin, Foreign Military Sales (FMS), and FOB: Destination OCONUS/Export movements to obtain the appropriate DOD regulatory clearances, shipping documentation and instructions from your cognizant DCMA Transportation Office. If you are new to DCMA, and do not already have a SIR eTool account, you will first need to request an account via DCMA External Web Access Management (EWAM) application which can be accessed at http://www.dcma.mil. If you need additional assistance, email DCMA Transportation Group at: Transportation.Division@dcma.mil. Do not move any freight to a water or aerial port prior to contacting DCMA or it will become frustrated. Failure to contact the responsible DCMA may result in vendor incurring additional expenditures.	Vendor Transportation Instructions

TACRN:

AAA

TRANSPORTATION FUNDS INFORMATION:

Purchase Instrument Line LOA: 97X4930.FC04 646 47GT 15101H 01N000 00000 GGGTTT 503000 F03000 FSR: 013352 PSR: K42907

First Destination Transportation Account Code: FRS2

Miscellaneous Obligation / Reimbursement Document:

Second Destination Transportation Account Code:

FMS LOA:

Additional Funding Information:

ITEM / SHIP TO(s):

NSN / Pseudo NSN: 1660011680330

Purchase Instrument Line Item Number: 0001

Ship to (DoDAAC / MAPAC): SW3211

Mark For: 09 ACCT

Ship To (Address): DLA DISTRIBUTION DEPOT OKLAHOMA
3301 F AVE CEN REC BLDG 506 DR 22
TINKER AFB OK 73145-8000
73145 - 8000
USA

WPOD:

APOD:

BBP / CCP:

RIC: 1

Ship To (Remarks): MARK FOR: ACCOUNT 09 SHIP TO SW3211

Requisition Number:

Supplemental Address:

FMS Case:

EVALUATION OF PORT BID OR PROPOSAL:

SOLICITATION DATA NOTES:

OTHER TRANSPORTATION DATA:

NAME	ORGANIZATION / OFFICE SYMBOL	COMMERCIAL / DSN PHONE	SIGNATURE	DATE
Carter, Glenn A	406 SCMS / GULAA	730-326-3629 / 468-3629	//SIGNED//Carter, Glenn A	25 FEB 2026

ITEM UNIQUE IDENTIFICATION (IUID) CHECKLIST

I. IUID DETAILS: DFARS 252.211.7003

SECTION (c) (1) (i) APPLIES TO THE FOLLOWING:

ITEM REQUIRING IUID MARKING

NSN	VERSION NUMBER
1660011680330	1

NOUN

CONTROL BOX,ELECTRI

INITIATOR	ORGANIZATION CODE / OFFICE SYMBOL
Stauffer, Karl G	422 SCMS / GUEAB
COMMERCIAL PHONE	DSN PHONE
405-582-5343	852-5343

CAGE / REFERENCE NUMBER

MARKING IS TO BE PERFORMED IN ACCORDANCE WITH THE LATEST VERSION OF MIL-STD-130

MARKING GUIDANCE	ENGINEERING DRAWING / ECP / ECO NUMBER
Engineering Drawing / ECP / ECO	2011C0941-T
MARKING TYPE	MARKING METHOD

DESCRIPTION / LOCATION

REMARKS

ATTACHMENT(S)

2011C0941-T_73030_Notice_-.pdf

II. EMBEDDED ITEMS

SECTION (c) (1) (iii) APPLIES TO THE FOLLOWING:

NSN	NOUN

CAGE / REFERENCE NUMBER

ITEM IS AN EMBEDDED ITEM FOR NSN / PSEUDO NSN: 1660011680330

MARKING GUIDANCE	ENGINEERING DRAWING / ECP / ECO NUMBER
MARKING TYPE	MARKING METHOD

DESCRIPTION / LOCATION

REMARKS

ATTACHMENT(S)

ENGINEERING ORDER

1. ENGINEERING ORDER NO. 2011C0941-T

DATE: 20110715 | PAGE 1 OF 3 PAGES

2. DWG TITLE	3. DWG CAGE CODE	4. DWG NO.
Controller, Temperature ACS/MCS	73030	776323

5. NEXT ASSY	6. USED ON	7. OPR CAGE CODE	DWG SIZE	DWG SHEET(S)	LATEST DWG REV LTR
	B-52 Aircraft	98748	J	2	AK

8. TYPE OF ENGINEERING ORDER		9. REASONS FOR CHANGE	
✓	ADVANCE CHANGE		ERROR CORRECTION
	DEVIATION AUTHORIZED		DESIGN CHANGE
	CHANGE NOTICE		DRAWING CLARIFICATION
	INFORMATION	✓	UPDATE DRAWING

11. DOCUMENTS AFFECTED *(TO/TCTO/SPEC/OTHER)*

15A8-3-21-3
15A8-3-21-4

12. EO PREPARED/REQUESTED BY	SYMBOL	DATE
Brian Hendry HENDRY.BRIAN.J.1231299587 Digitally signed by HENDRY.BRIAN.J.1231299587 DN: c=US, o=U.S. Government, ou=DoD, ou=PKI, ou=USAF, cn=HENDRY.BRIAN.J.1231299587 Date: 2011.08.19 10:55:00 -05'00'	422 SCMS	
PHONE (405) 734-8277		
13. ENGINEERING APPROVAL ELDEN.MARK.E.JR.1228787902 Digitally signed by ELDEN.MARK.E.JR.1228787902 DN: c=US, o=U.S. Government, ou=DoD, ou=PKI, ou=USAF, cn=ELDEN.MARK.E.JR.1228787902 Date: 2011.08.23 16:06:46 -05'00'	422 SCMS	23-Aug-11
PHONE 405-734-8274		

14. CORROSION CONT. MON.	SYMBOL	DATE
15. NDI	SYMBOL	DATE
16.	SYMBOL	DATE
17. DWG CHANGED BY	SYMBOL	DATE
18. CHANGE CHECKED BY	SYMBOL	DATE
19. EO/DWG RELEASED BY ELDEN.MARK.E.JR.1228787902 Digitally signed by ELDEN.MARK.E.JR.1228787902 DN: c=US, o=U.S. Government, ou=DoD, ou=PKI, ou=USAF, cn=ELDEN.MARK.E.JR.1228787902 Date: 2011.08.23 16:07:05 -05'00'	SYMBOL 422 SCMS	DATE 23-Aug-11

10. DISPOSITION OF SPARES	
	REWORK
	MODIFY
	SCRAP
	REPLACE

OTHER COMMENTS

This EO adds Item Unique Identification (IUID) requirements to the drawing

DRC Contract

20. DESCRIPTION OF CHANGES/REMARKS

- B-52 Aircraft ACS/MCS Temperature Controller (PN 776323-2) shall be marked with a Unique Item Identifier (UII). (REF: MIL-STD-130)

- If no UII matrix is present, fabricate new identification plate (200945085-005A) and attach to the end item, adjacent to the existing identification plate/label (69253B4).

- The new UID identification plate will be located on the end item as shown in sketch/photo on page 2, AF form 3926.

ENGINEERING ORDER *(Continuation Sheet)*		1. ENGINEERING ORDER NO. 2011C0941-T	
		DATE: 20110715	PAGE 2 OF 3 PAGES
2. DWG TITLE Controller, Temperature ACS/MCS	3. DWG CAGE CODE 73030	4. DWG NO. 776323	

5. DESCRIPTION OF CHANGES/REMARKS

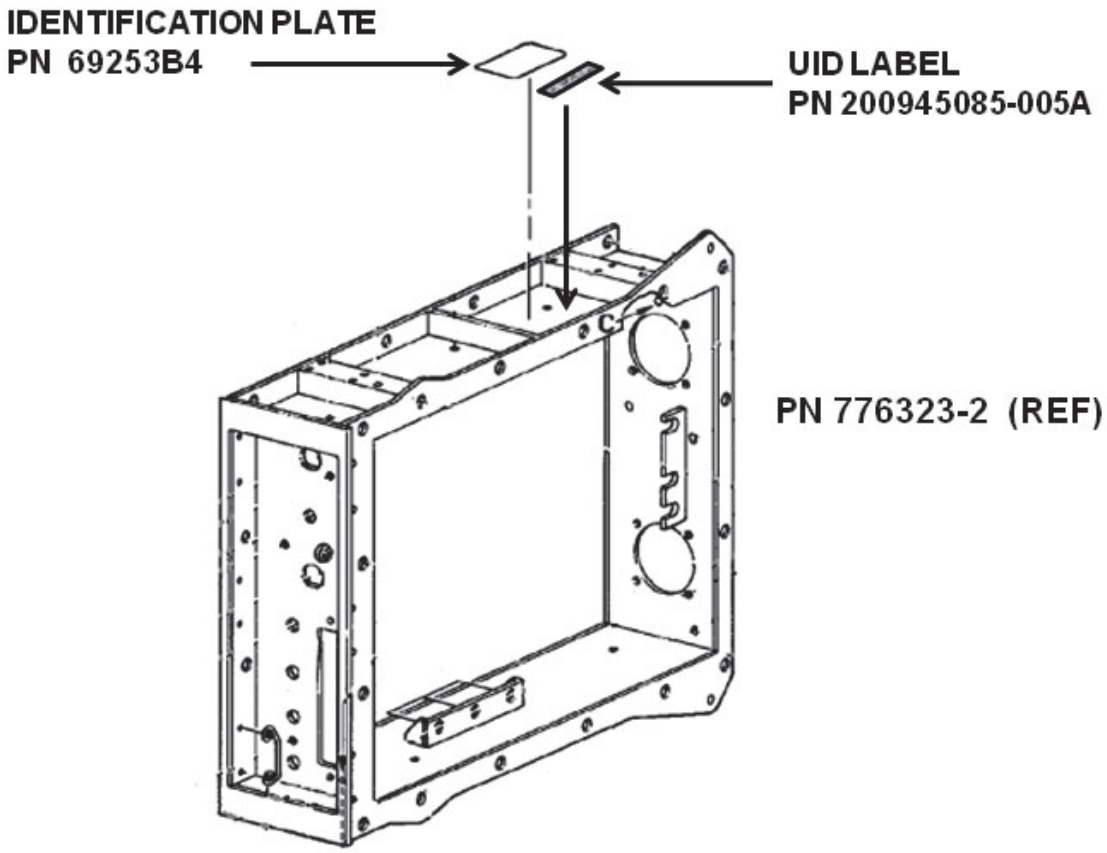

ENGINEERING ORDER - PARTS LIST CHANGES

1. ENGINEERING ORDER NO. 2011C0941-T

DATE: 20110715

2. DWG TITLE: Controller, Temperature ACS/MCS

3. DWG CAGE CODE: 73030

4. DWG NO.: 776323

PARTS LIST CHANGE

ACTION	QTY REQ PER DASH NO			SYM	NOMENCLATURE	CAGE CODE	IDENTIFYING NO.	MATERIAL/SPECIFICATION	ZONE	FIND NO.
ADD	1				PLATE, Identification	98752	200945085-005A	PV6 tesa® Secure Tape or Equivalent		