DEPARTMENT OF VETERANS AFFAIRS

VA NORTHERN CALIFORNIA HEALTHCARE SYSTEM
MARTINEZ & MARE ISLAND CAMPUSES
CORRECT GENERATOR FUEL LINES
PROJECT NO. 612-23-005

GENERAL

GI-001 COVER SHEET

CIVIL

CS-001 MARTINEZ CAMPUS – OVERALL SITE PLAN
CS-002 MARTINEZ CAMPUS – SITE PLAN ENLARGEMENT
CS-003 MARE ISLAND CAMPUS – SITE PLAN
CD-001 MARTINEZ CAMPUS – DEMO PLAN
CD-002 MARE ISLAND CAMPUS – DEMO PLAN
CU-001 MARTINEZ CAMPUS – UTILITY PLAN
CU-002 MARE ISLAND CAMPUS – UTILITY PLAN

ICRA

ICRA-00 ICRA GENERAL REQUIREMENTS
ICRA-01 PCRA GENERAL REQUIREMENTS
ICRA-02 ICRA NOTES & DETAILS
ICRA-100 MARTINEZ BUILDING 19 & 20 ICRA CLASSIFICATION PLANS
ICRA-101 MARTINEZ BUILDING 20 PENTHOUSE ICRA CLASSIFICATION PLAN

PHASING

GC-100 MARTINEZ BUILDING 19 PHASING PLAN
GC-101 MARTINEZ BUILDING 20 PHASING PLAN 1
GC-102 MARTINEZ BUILDING 20 PHASING PLANS 2
GC-103 MARTINEZ BUILDING 20 PENTHOUSE PHASING PLAN
GC-104 MARE ISLAND PHASING PLAN

MECHANICAL

M-001 MECHANICAL SYMBOLS & NOTES
MP-100 MARTINEZ BUILDING 19 MECHANICAL PLANS
MP-101 MARTINEZ BUILDING 19 MECHANICAL SCHEMATICS
MP-102 MARTINEZ BUILDING 20 MECHANICAL DEMOLITION PLAN 1
MP-103 MARTINEZ BUILDING 20 MECHANICAL DEMOLITION PLANS 2
MP-104 MARTINEZ BUILDING 20 MECHANICAL NEW WORK PLAN 1
MP-105 MARTINEZ BUILDING 20 MECHANICAL NEW WORK PLANS 2
MP-106 MARTINEZ BUILDING 20 PENTHOUSE MECHANICAL PLANS
MP-107 MARTINEZ BUILDING 20 MECHANICAL SCHEMATICS
MP-108 MARE ISLAND MECHANICAL PLANS
MP-109 MARE ISLAND MECHANICAL SCHEMATICS
MI-100 MARTINEZ BUILDING 19 CONTROLS NEW WORK PLAN
MI-101 MARTINEZ BUILDING 20 CONTROLS NEW WORK PLAN 1
MI-102 MARTINEZ BUILDING 20 CONTROLS NEW WORK PLANS 2
MI-103 MARTINEZ BUILDING 20 PENTHOUSE CONTROLS NEW WORK PLAN
MI-104 MARE ISLAND CONTROLS NEW WORK PLAN
MI-105 MARE ISLAND CONTROLS POINTS LIST
MI-400 MARTINEZ MECHANICAL CONTROLS DIAGRAMS
MI-401 MARE ISLAND MECHANICAL CONTROLS DIAGRAMS
MI-402 CONTROLS SUMMARY
M-500 MECHANICAL DETAILS 1
M-501 MECHANICAL DETAILS 2
M-600 MECHANICAL SCHEDULES

ELECTRICAL

E-001 GENERAL ELECTRICAL SYMBOLS, NOTES & ABBREVIATIONS
EP-100 MARTINEZ BUILDING 19 ELECTRICAL PLANS
EP-101 MARTINEZ BUILDING 20 ELECTRICAL DEMOLITION PLAN
EP-102 MARTINEZ BUILDING 20 ELECTRICAL NEW WORK PLAN
EP-103 MARE ISLAND ELECTRICAL PLANS
E-500 ELECTRICAL DETAILS
E-600 MARTINEZ ELECTRICAL SCHEDULES
E-601 MARE ISLAND ELECTRICAL SCHEDULES & ONE-LINES

LOCATION MAP
SCALE: NOT TO SCALE

Revisions:	Date:

CONSULTANT

ARCHITECT/ENGINEER OF RECORD

NEI Northeast Infrastructure, LLC
34 BROWN STREET
HONESDALE, PA 18431
OFFICE : (570) 253-0846
WWW.NEINFRA.COM

STAMP

COMMONWEALTH OF PENNSYLVANIA REGISTERED PROFESSIONAL ENGINEER No. PE045114E

Office of Construction and Facilities Management

VA U.S. Department of Veterans Affairs

Drawing Title: COVER SHEET	Phase: BID DOCUMENTS
Approved: Project Director: VA SIERRA PACIFIC NETWORK (VISN 21) VA NORTHERN CALIFORNIA HEALTHCARE SYSTEM	
Project Title: CORRECT MARTINEZ & MARE ISLAND GENERATOR FUEL LINES	Project Number: 612-23-005
	Building Number: N/A
Location: 150 MUIR ROAD MARTINEZ, CA 94553 / 201 WALNUT AVENUE MARE ISLAND, CA 94592	Drawing Number: GI-001
Issue Date: 04/17/2026	Checked: D.L.E. / Drawn: V.A.C.

6/14/2009 12:39:03 PM

File Path

VA FORM 08 - 6231

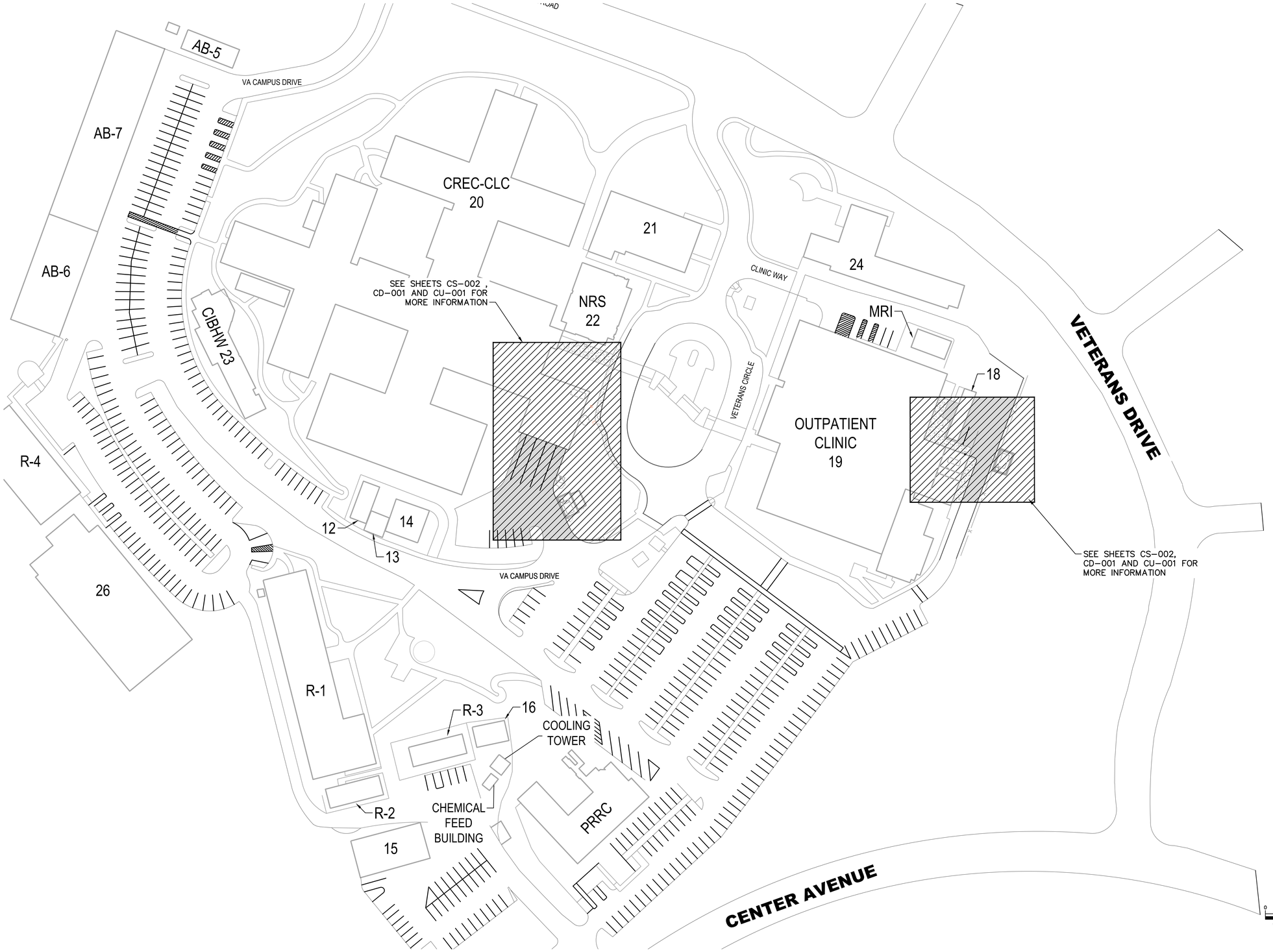

ENGINEER NOTES:

1. CONTRACTOR SHALL HAUL AWAY EXISTING MATERIAL THAT HAS BEEN REMOVED FROM THE SYSTEM AND DISPOSE OF UNUSED FUEL. CONTRACTOR SHALL ENSURE THAT DISPOSAL METHODS THAT COMPLY WITH LOCAL, STATE, AND FEDERAL REGULATIONS ARE UTILIZED.
2. CONTRACTOR TO INSTALL NEW DIRECT BURIED FUEL OIL PIPING WITH TOP OF PIPE AT LEAST 18 INCHES OF COVER AND PROVIDE ADDITIONAL COVER/PROTECTION IN VEHICULAR AREAS.
3. CONTRACTOR TO MAINTAIN A MINIMUM OF 12-INCH VERTICAL SEPARATION BETWEEN BURIED ELECTRICAL AND FUEL UTILITIES. WHERE THIS SEPARATION CANNOT BE ACHIEVED, CODE-COMPLIANT PROTECTIVE MEASURES SUCH AS CONCRETE ENCASEMENT, CASING PIPE, OR RIGID CONDUIT, AS REQUIRED BY THE VA SHALL BE PROVIDED.

LEGEND

AREA OF WORK

KEY NOTES:

1. EXISTING CURB AND GUTTER
2. EXISTING PARKING
3. EXISTING SIDEWALK
4. EXISTING FENCE
5. TRUCK LOADING/UNLOADING ZONE
6. APPROX. LOCATION OF EXISTING TREE
7. APPROX. LOCATION OF EXISTING LIGHT POLE
8. APPROX. LOCATION OF EXISTING ELECTRIC HANDHOLE

811 UNCC CALL BEFORE YOU DIG 811 OR 1-800-642-2444 Utility Notification Center of California
Administrative Office 4055 Port Chicago Hwy #100, Concord, CA. 94520

CALL 2 BUSINESS DAYS IN ADVANCE BEFORE YOU DIG, GRADE OR EXCAVATE FOR THE MARKING OF UNDERGROUND MEMBER UTILITIES.

CALIBRE ENGINEERING, INC. ASSUMES NO RESPONSIBILITY FOR EXISTING UTILITY LOCATIONS (HORIZONTAL AND VERTICAL). THE EXISTING UTILITIES SHOWN ON THIS DRAWING HAVE BEEN PLOTTED FROM THE BEST AVAILABLE INFORMATION. IT IS, HOWEVER, THE RESPONSIBILITY OF THE CONTRACTOR TO FIELD VERIFY THE LOCATIONS OF ALL UTILITIES PRIOR TO THE COMMENCEMENT OF ANY CONSTRUCTION ACTIVITIES.

NOT FOR CONSTRUCTION

Revisions:	Date:

CONSULTANT

Calibre
Calibre Engineering, Inc.
8822 South Ridgeline Boulevard, Suite 310
Highlands Ranch, CO 80129 (303) 730-0434
www.calibre-engineering.com
Civil Engineering | Structural Engineering | Whitewater

ARCHITECT/ENGINEER OF RECORD

NEI Northeast Infrastructure, LLC
34 BROWN STREET
HONESDALE, PA 18431
OFFICE : (570) 253-0846
WWW.NEINFRA.COM

STAMP

COLORADO REGISTERED PROFESSIONAL ENGINEER 35754 2026-02-26 PROFESSIONAL

Office of Construction and Facilities Management

VA U.S. Department of Veterans Affairs

Drawing Title: MARTINEZ CAMPUS - OVERALL SITE PLAN	Phase: BID DOCUMENTS	Project Title: CORRECT MARTINEZ & MARE ISLAND GENERATOR FUEL LINES	Project Number: 612-23-005
Approved: Project Director: VA SIERRA PACIFIC NETWORK (VISN 21) VA NORTHERN CALIFORNIA HEALTHCARE SYSTEM		Location: 150 MUIR ROAD MARTINEZ, CA 94553 / 201 WALNUT AVENUE MARE ISLAND, CA 94592	Building Number
		Issue Date: 04/17/2026 / Checked: JG / Drawn: NS	Drawing Number: CS-001

File Path: 6/14/2009 12:39:03 PM

VA FORM 08 - 6231

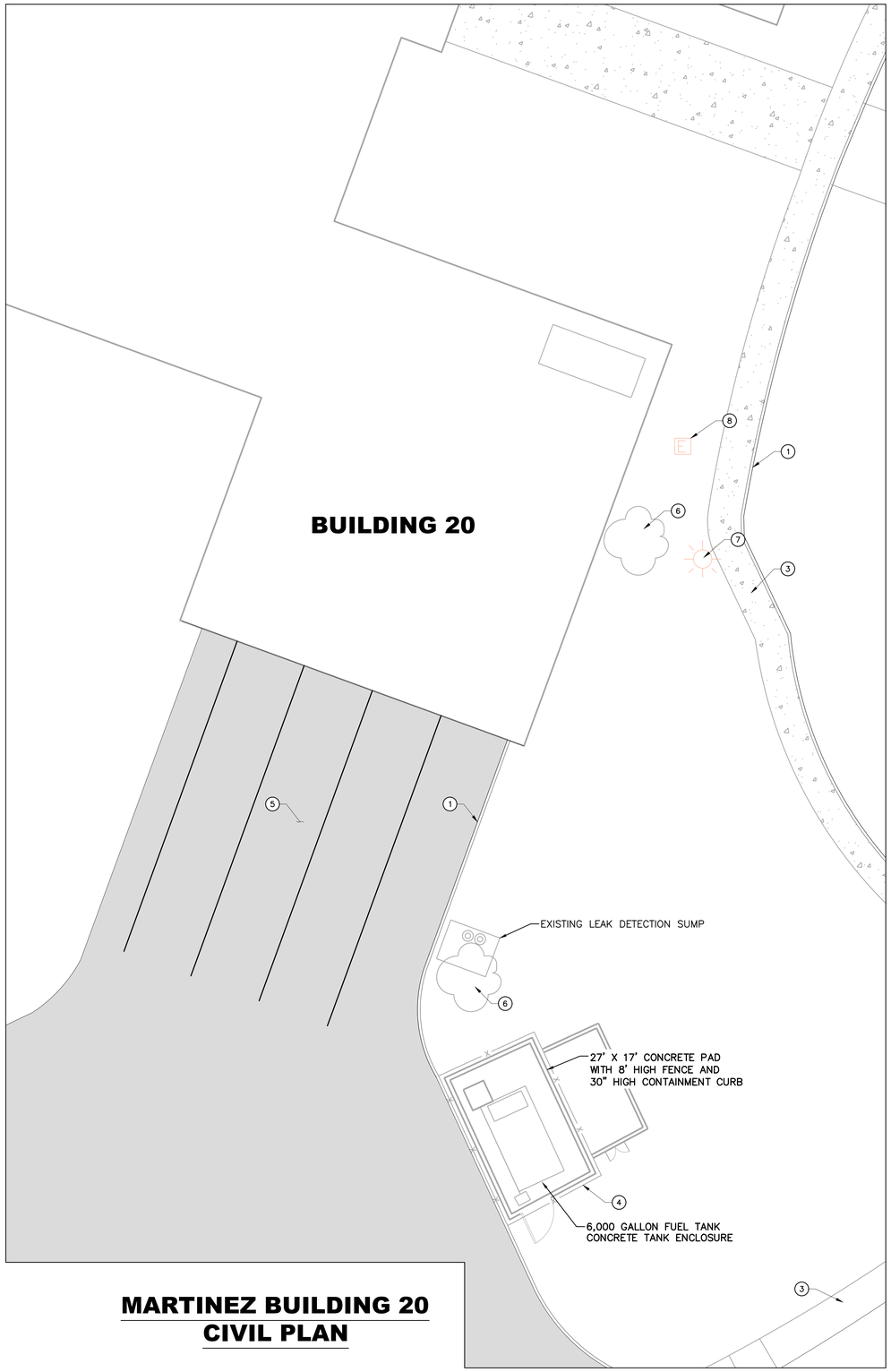

MARTINEZ BUILDING 20
CIVIL PLAN

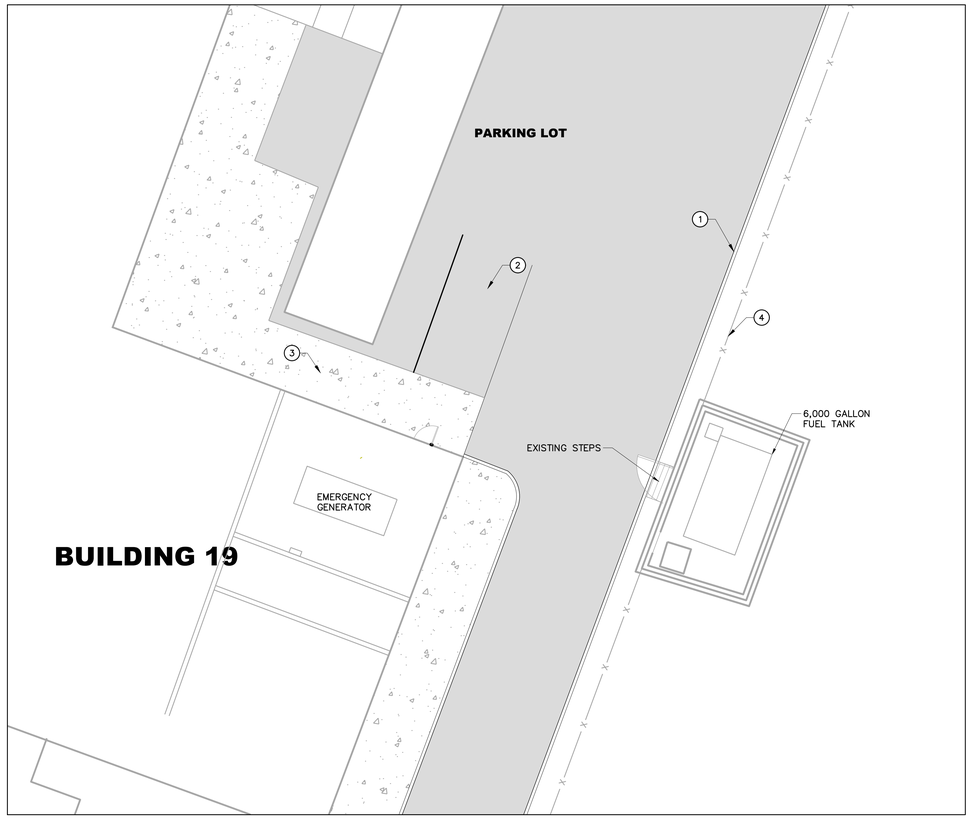

MARTINEZ BUILDING 19
CIVIL PLAN

ENGINEER NOTES:

1. CONTRACTOR SHALL HAUL AWAY EXISTING MATERIAL THAT HAS BEEN REMOVED FROM THE SYSTEM AND DISPOSE OF UNUSED FUEL. CONTRACTOR SHALL ENSURE THAT DISPOSAL METHODS THAT COMPLY WITH LOCAL, STATE, AND FEDERAL REGULATIONS ARE UTILIZED.
2. CONTRACTOR TO INSTALL NEW DIRECT BURIED FUEL OIL PIPING WITH TOP OF PIPE AT LEAST 18 INCHES OF COVER AND PROVIDE ADDITIONAL COVER/PROTECTION IN VEHICULAR AREAS.
3. CONTRACTOR TO MAINTAIN A MINIMUM OF 12-INCH VERTICAL SEPARATION BETWEEN BURIED ELECTRICAL AND FUEL UTILITIES. WHERE THIS SEPARATION CANNOT BE ACHIEVED, CODE-COMPLIANT PROTECTIVE MEASURES SUCH AS CONCRETE ENCASEMENT, CASING PIPE, OR RIGID CONDUIT, AS REQUIRED BY THE VA SHALL BE PROVIDED.

LEGEND

AREA OF WORK

EXISTING ASPHALT PAVEMENT

EXISTING CONCRETE

KEY NOTES:

1. EXISTING CURB AND GUTTER
2. EXISTING PARKING
3. EXISTING SIDEWALK
4. EXISTING FENCE
5. TRUCK LOADING/UNLOADING ZONE
6. APPROX. LOCATION OF EXISTING TREE
7. APPROX. LOCATION OF EXISTING LIGHT POLE
8. APPROX. LOCATION OF EXISTING ELECTRIC HANDHOLE

0 5 10 20

1 inch = 10 ft. Horizontal

811 UNCC CALL BEFORE YOU DIG 811 OR 1-800-642-2444 Utility Notification Center of California
Administrative Office 4055 Port Chicago Hwy #100, Concord, CA. 94520

CALL 2 BUSINESS DAYS IN ADVANCE BEFORE YOU DIG, GRADE OR EXCAVATE FOR THE MARKING OF UNDERGROUND MEMBER UTILITIES.

CALIBRE ENGINEERING, INC. ASSUMES NO RESPONSIBILITY FOR EXISTING UTILITY LOCATIONS (HORIZONTAL AND VERTICAL). THE EXISTING UTILITIES SHOWN ON THIS DRAWING HAVE BEEN PLOTTED FROM THE BEST AVAILABLE INFORMATION. IT IS, HOWEVER, THE RESPONSIBILITY OF THE CONTRACTOR TO FIELD VERIFY THE LOCATIONS OF ALL UTILITIES PRIOR TO THE COMMENCEMENT OF ANY CONSTRUCTION ACTIVITIES.

NOT FOR CONSTRUCTION

Revisions:	Date:

CONSULTANT

Calibre
Calibre Engineering, Inc.
8822 South Ridgeline Boulevard, Suite 310
Highlands Ranch, CO 80129 (303) 730-0434
www.calibre-engineering.com
Civil Engineering | Structural Engineering | Whitewater

ARCHITECT/ENGINEER OF RECORD

NEI Northeast Infrastructure, LLC
34 BROWN STREET
HONESDALE, PA 18431
OFFICE : (570) 253-0846
WWW.NEINFRA.COM

STAMP

COMMONWEALTH OF PENNSYLVANIA REGISTERED PROFESSIONAL ENGINEER 35754 2026-03-02

Office of Construction and Facilities Management

VA U.S. Department of Veterans Affairs

Drawing Title: MARTINEZ CAMPUS - SITE PLAN ENLARGEMENT	Phase: BID DOCUMENTS	Project Title: CORRECT MARTINEZ & MARE ISLAND GENERATOR FUEL LINES	Project Number: 612-23-005
Approved: Project Director: VA SIERRA PACIFIC NETWORK (VISN 21) VA NORTHERN CALIFORNIA HEALTHCARE SYSTEM		Location: 150 MUIR ROAD MARTINEZ, CA 94553 / 201 WALNUT AVENUE MARE ISLAND, CA 94592	Building Number
		Issue Date: 04/17/2026	Checked: JG / Drawn: NS
			Drawing Number: CS-002

6/14/2026 12:39:03 PM

File Path

VA FORM 08 - 6231

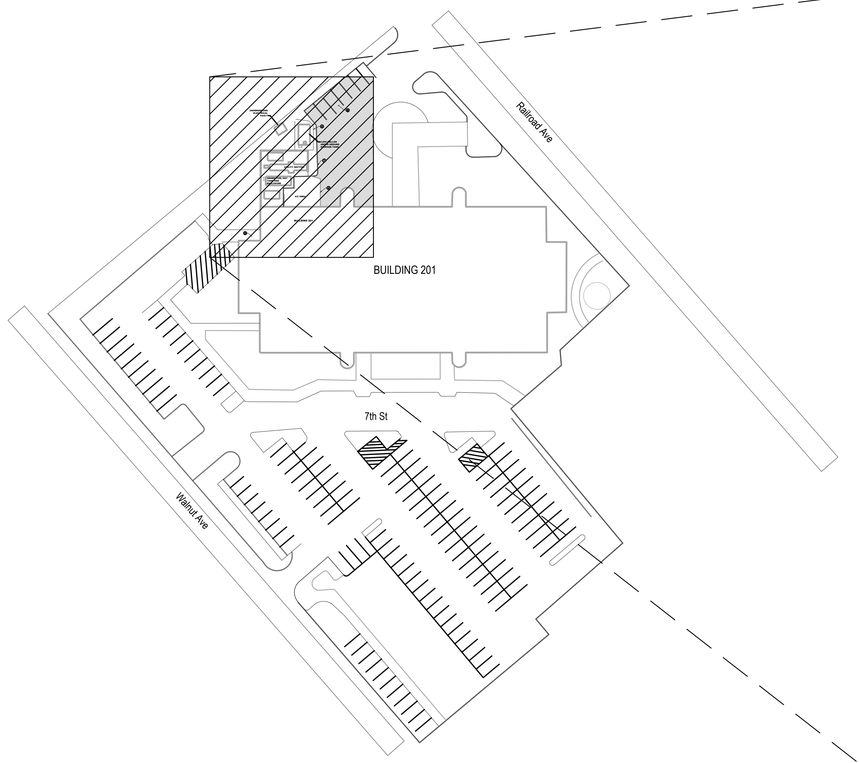

MARE ISLAND
OVERALL CIVIL SITE PLAN

0 25 50 100
1 inch = 50 ft. Horizontal

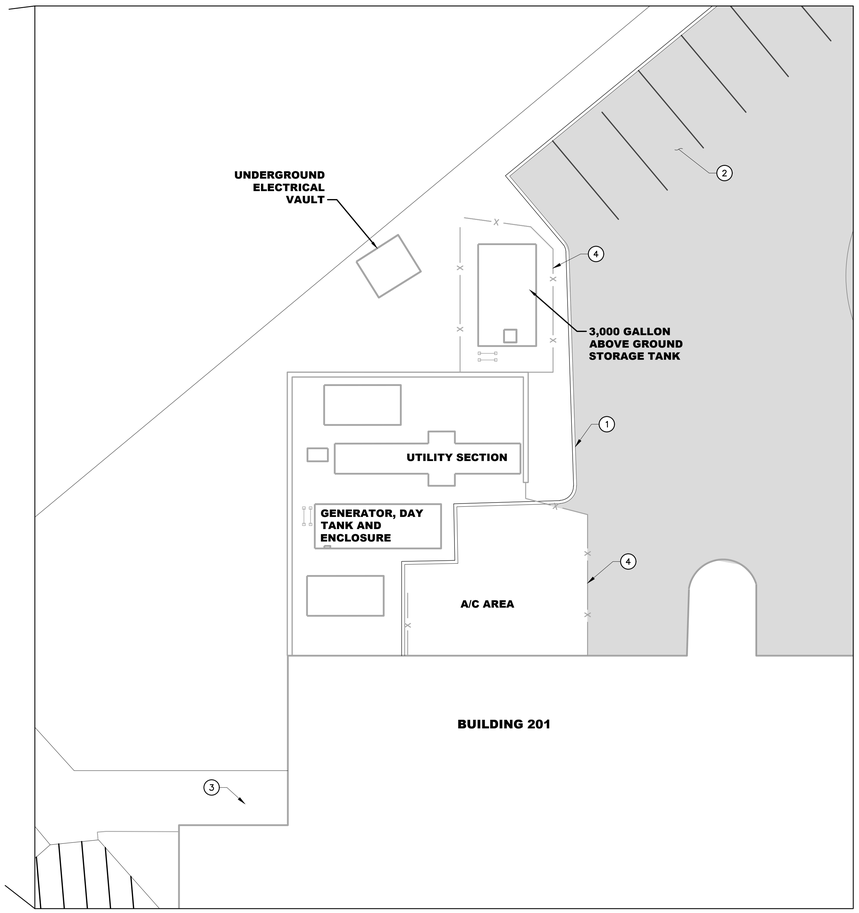

MARE ISLAND
CIVIL SITE PLAN

0 5 10 20
1 inch = 10 ft. Horizontal

ENGINEER NOTES:

1. CONTRACTOR SHALL HAUL AWAY EXISTING MATERIAL THAT HAS BEEN REMOVED FROM THE SYSTEM AND DISPOSE OF UNUSED FUEL. CONTRACTOR SHALL ENSURE THAT DISPOSAL METHODS THAT COMPLY WITH LOCAL, STATE, AND FEDERAL REGULATIONS ARE UTILIZED.
2. CONTRACTOR TO INSTALL NEW DIRECT BURIED FUEL OIL PIPING WITH TOP OF PIPE AT LEAST 18 INCHES OF COVER AND PROVIDE ADDITIONAL COVER/PROTECTION IN VEHICULAR AREAS.
3. CONTRACTOR TO MAINTAIN A MINIMUM OF 12-INCH VERTICAL SEPARATION BETWEEN BURIED ELECTRICAL AND FUEL UTILITIES. WHERE THIS SEPARATION CANNOT BE ACHIEVED, CODE-COMPLIANT PROTECTIVE MEASURES SUCH AS CONCRETE ENCASEMENT, CASING PIPE, OR RIGID CONDUIT, AS REQUIRED BY THE VA SHALL BE PROVIDED.

LEGEND

AREA OF WORK

EXISTING ASPHALT PAVEMENT

EXISTING CONCRETE

(#) KEY NOTES:

1. EXISTING CURB AND GUTTER
2. EXISTING PARKING
3. EXISTING SIDEWALK
4. EXISTING FENCE
5. TRUCK LOADING/UNLOADING ZONE
6. APPROX. LOCATION OF EXISTING TREE
7. APPROX. LOCATION OF EXISTING LIGHT POLE
8. APPROX. LOCATION OF EXISTING ELECTRIC HANDHOLE

811 UNCC CALL BEFORE YOU DIG 811 OR 1-800-642-2444
Utility Notification Center of California
Administrative Office 4055 Port Chicago Hwy #100, Concord, CA. 94520

CALL 2 BUSINESS DAYS IN ADVANCE BEFORE YOU DIG, GRADE OR EXCAVATE FOR THE MARKING OF UNDERGROUND MEMBER UTILITIES.

CALIBRE ENGINEERING, INC. ASSUMES NO RESPONSIBILITY FOR EXISTING UTILITY LOCATIONS (HORIZONTAL AND VERTICAL). THE EXISTING UTILITIES SHOWN ON THIS DRAWING HAVE BEEN PLOTTED FROM THE BEST AVAILABLE INFORMATION. IT IS, HOWEVER, THE RESPONSIBILITY OF THE CONTRACTOR TO FIELD VERIFY THE LOCATIONS OF ALL UTILITIES PRIOR TO THE COMMENCEMENT OF ANY CONSTRUCTION ACTIVITIES.

NOT FOR CONSTRUCTION

Revisions:	Date:

CONSULTANT

Calibre

Calibre Engineering, Inc.
8822 South Ridgeline Boulevard, Suite 310
Highlands Ranch, CO 80129 (303) 730-0434
www.calibre-engineering.com
Civil Engineering | Structural Engineering | Whitewater

ARCHITECT/ENGINEER OF RECORD

NEI Northeast Infrastructure, LLC
34 BROWN STREET
HONESDALE, PA 18431
OFFICE : (570) 253-0846
WWW.NEINFRA.COM

STAMP

COLORADO REGISTERED PROFESSIONAL ENGINEER 36754 03-02-2026 PROFESSIONAL ENGINEER

Office of Construction and Facilities Management

VA U.S. Department of Veterans Affairs

Drawing Title: MARE ISLAND CAMPUS - SITE PLAN	Phase: BID DOCUMENTS
Approved: Project Director: VA SIERRA PACIFIC NETWORK (VISN 21) VA NORTHERN CALIFORNIA HEALTHCARE SYSTEM	

Project Title: CORRECT MARTINEZ & MARE ISLAND GENERATOR FUEL LINES	Project Number: 612-23-005
	Building Number:
Location: 150 MUIR ROAD MARTINEZ, CA 94553 / 201 WALNUT AVENUE MARE ISLAND, CA 94592	Drawing Number: CS-003
Issue Date: 04/17/2026 / Checked: JG / Drawn: NS	

6/14/2009 12:39:03 PM

File Path

VA FORM 08 - 6231

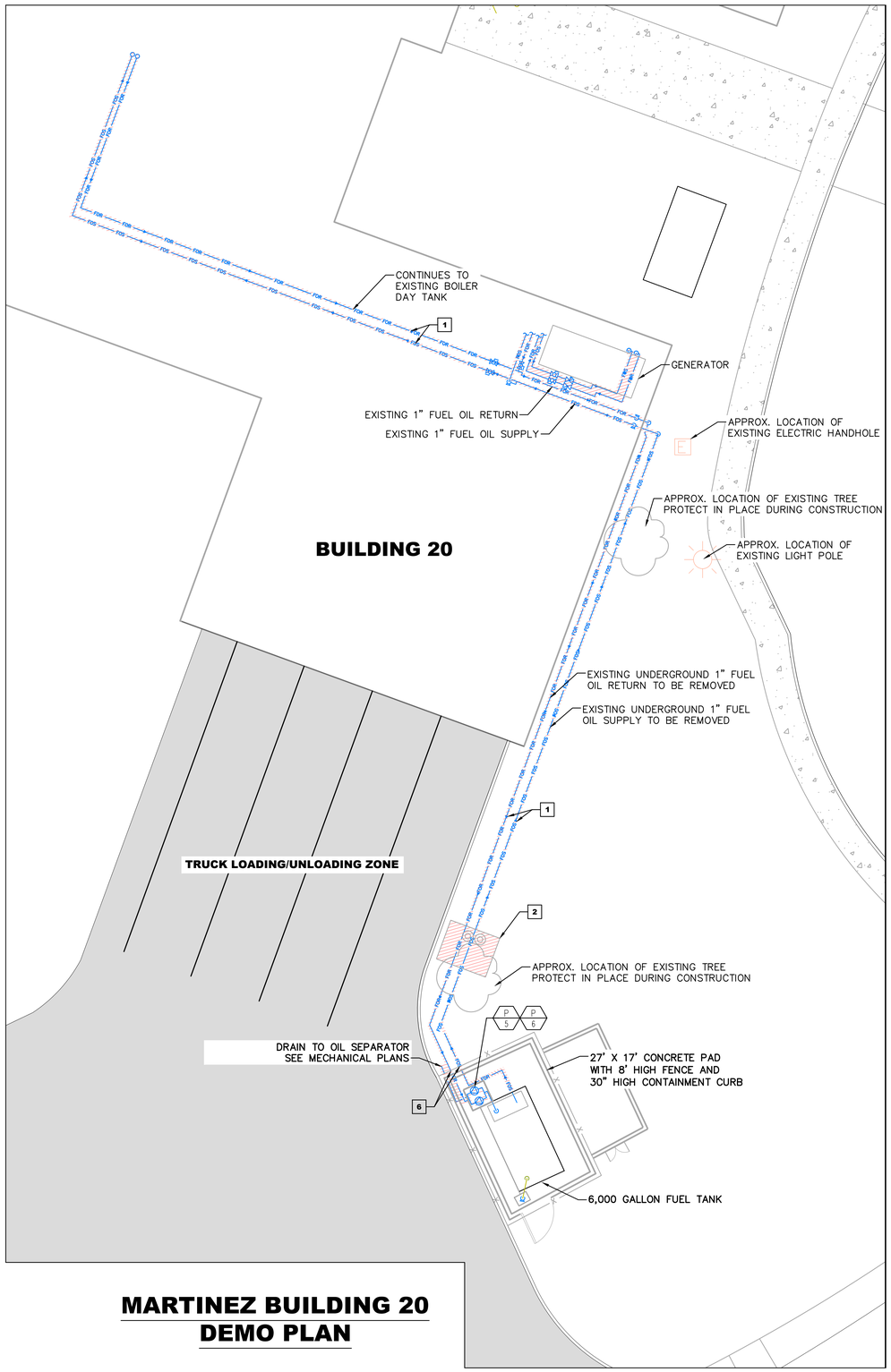

MARTINEZ BUILDING 20
DEMO PLAN

MARTINEZ BUILDING 19
DEMO PLAN

ENGINEER NOTES:

1. CONTRACTOR SHALL HAUL AWAY EXISTING MATERIAL THAT HAS BEEN REMOVED FROM THE SYSTEM AND DISPOSE OF UNUSED FUEL. CONTRACTOR SHALL ENSURE THAT DISPOSAL METHODS THAT COMPLY WITH LOCAL, STATE, AND FEDERAL REGULATIONS ARE UTILIZED.
2. CONTRACTOR TO PERFORM UNDERGROUND UTILITY LOCATION TO DETERMINE LOCATION AND DEPTH OF ALL EXISTING UTILITIES. PROVIDE FINDINGS TO THE A&E FIRM FOR REVIEW AND APPROVAL BEFORE DIGGING.
3. CONTRACTOR SHALL DISPOSE OF EXISTING MATERIAL THAT HAS BEEN REMOVED FROM THE SYSTEM AND DISPOSE OF UNUSED FUEL. CONTRACTOR SHALL ENSURE THAT DISPOSAL METHODS THAT COMPLY WITH LOCAL, STATE, AND FEDERAL REGULATIONS ARE UTILIZED.
4. CONTRACTOR SHALL INSTALL REPLACEMENT FUEL PIPING IN PARALLEL TO EXISTING FUEL PIPING IN ALL LOCATIONS.
5. CONTRACTOR SHALL CONNECT THE EMERGENCY GENERATOR TO THE INSTALLED REPLACEMENT FUEL OIL SYSTEM DURING OFF HOURS. THIS CHANGE-OVER MUST BE COMPLETED PRIOR TO REGULAR BUSINESS HOURS.
6. CONTRACTOR SHALL UTILIZE EXISTING FUEL PIPING AND EQUIPMENT TO ENSURE THE EMERGENCY GENERATOR MAINTAINS OPERATION THROUGHOUT THE DURATION OF CONSTRUCTION.

LEGEND

EX. FENCE
DEMOLITION/TRENCH LIMITS
EXISTING ASPHALT PAVEMENT
EXISTING CONCRETE

KEYED DEMO NOTES:

1. NOTED PIPING AND APPURTENANCES SHALL BE REPLACED UP TO THE DAY TANKS ONLY.
2. REMOVE EXISTING LEAK DETECTION SYSTEM COMPONENTS INCLUDING SENSORS, PREFABRICATED LEAK DETECTION INSERTION BASIN, AND ALL ASSOCIATED POWER AND DATA CONNECTIONS FROM LEAK DETECTION PIT. CONCRETE LEAK DETECTION PIT TO BE DEMOLISHED.
3. EXISTING ASPHALT TO BE REMOVED.
4. EXISTING CURB AND GUTTER TO BE REMOVED.
5. REMOVE EXISTING LEAK DETECTION SYSTEM CONTROLLER AND ALL ASSOCIATED POWER AND DATA CONNECTIONS. SEE ASSOCIATED ELECTRICAL PLANS FOR ADDITIONAL DETAIL.
6. CONTRACTOR TO SEAL OPENINGS LEFT BY THE REMOVED FUEL PIPES WITH NON-SHRINK, FUEL-RESISTANT GROUT OR CONCRETE PATCH MATERIAL TO RESTORE THE WALL'S FIRE RATING AND STRUCTURAL INTEGRITY. SEE SHEET M-501 FOR PIPE PENETRATION DETAIL. PIPING CROSSINGS BELOW GRADE OF THE WALL SHALL BE UNDER THE CONTRACTOR'S MEANS AND METHODS, INCLUDING COORDINATION, SUPPORT, AND PROTECTION, IN ACCORDANCE WITH APPLICABLE CODES AND PROJECT REQUIREMENTS.

811 UNCC CALL BEFORE YOU DIG 811 OR 1-800-642-2444
Utility Notification Center of California
Administrative Office 4055 Port Chicago Hwy #100, Concord, CA. 94520

CALL 2 BUSINESS DAYS IN ADVANCE BEFORE YOU DIG, GRADE OR EXCAVATE FOR THE MARKING OF UNDERGROUND MEMBER UTILITIES.

CALIBRE ENGINEERING, INC. ASSUMES NO RESPONSIBILITY FOR EXISTING UTILITY LOCATIONS (HORIZONTAL AND VERTICAL). THE EXISTING UTILITIES SHOWN ON THIS DRAWING HAVE BEEN PLOTTED FROM THE BEST AVAILABLE INFORMATION. IT IS, HOWEVER, THE RESPONSIBILITY OF THE CONTRACTOR TO FIELD VERIFY THE LOCATIONS OF ALL UTILITIES PRIOR TO THE COMMENCEMENT OF ANY CONSTRUCTION ACTIVITIES.

0 5 10 20
1 inch = 10 ft. Horizontal

NOT FOR CONSTRUCTION

Revisions:	Date:

CONSULTANT
Calibre
Calibre Engineering, Inc.
8822 South Ridgeline Boulevard, Suite 310
Highlands Ranch, CO 80129 (303) 730-0434
www.calibre-engineering.com
Civil Engineering | Structural Engineering | Whitewater

ARCHITECT/ENGINEER OF RECORD
NEI Northeast Infrastructure, LLC
34 BROWN STREET
HONESDALE, PA 18431
OFFICE : (570) 253-0846
WWW.NEINFRA.COM

STAMP
COMMONWEALTH OF PENNSYLVANIA REGISTERED PROFESSIONAL ENGINEER 35754 03-02-2026

Office of Construction and Facilities Management
VA U.S. Department of Veterans Affairs

Drawing Title: MARTINEZ CAMPUS - DEMO PLAN	Phase: BID DOCUMENTS
Approved: Project Director: VA SIERRA PACIFIC NETWORK (VISN 21) VA NORTHERN CALIFORNIA HEALTHCARE SYSTEM	

Project Title: CORRECT MARTINEZ & MARE ISLAND GENERATOR FUEL LINES	Project Number: 612-23-005
	Building Number:
Location: 150 MUIR ROAD MARTINEZ, CA 94553 / 201 WALNUT AVENUE MARE ISLAND, CA 94592	Drawing Number: CD-001
Issue Date: 04/17/2026 / Checked: JG / Drawn: NS	

6/14/2009 12:39:03 PM
File Path:
VA FORM 08 - 6231

ENGINEER NOTES:

1. CONTRACTOR SHALL HAUL AWAY EXISTING MATERIAL THAT HAS BEEN REMOVED FROM THE SYSTEM AND DISPOSE OF UNUSED FUEL. CONTRACTOR SHALL ENSURE THAT DISPOSAL METHODS THAT COMPLY WITH LOCAL, STATE, AND FEDERAL REGULATIONS ARE UTILIZED.
2. CONTRACTOR TO PERFORM UNDERGROUND UTILITY LOCATION TO DETERMINE LOCATION AND DEPTH OF ALL EXISTING UTILITIES. PROVIDE FINDINGS TO THE A&E FIRM FOR REVIEW AND APPROVAL BEFORE DIGGING.
3. CONTRACTOR SHALL DISPOSE OF EXISTING MATERIAL THAT HAS BEEN REMOVED FROM THE SYSTEM AND DISPOSE OF UNUSED FUEL. CONTRACTOR SHALL ENSURE THAT DISPOSAL METHODS THAT COMPLY WITH LOCAL, STATE, AND FEDERAL REGULATIONS ARE UTILIZED.
4. CONTRACTOR SHALL INSTALL REPLACEMENT FUEL PIPING IN PARALLEL TO EXISTING FUEL PIPING IN ALL LOCATIONS.
5. CONTRACTOR SHALL CONNECT THE EMERGENCY GENERATOR TO THE INSTALLED REPLACEMENT FUEL OIL SYSTEM DURING OFF HOURS. THIS CHANGE–OVER MUST BE COMPLETED PRIOR TO REGULAR BUSINESS HOURS.
6. CONTRACTOR SHALL UTILIZE EXISTING FUEL PIPING AND EQUIPMENT TO ENSURE THE EMERGENCY GENERATOR MAINTAINS OPERATION THROUGHOUT THE DURATION OF CONSTRUCTION.

LEGEND

EX. FENCE

DEMOLITION/TRENCH LIMITS

EXISTING ASPHALT PAVEMENT

EXISTING CONCRETE

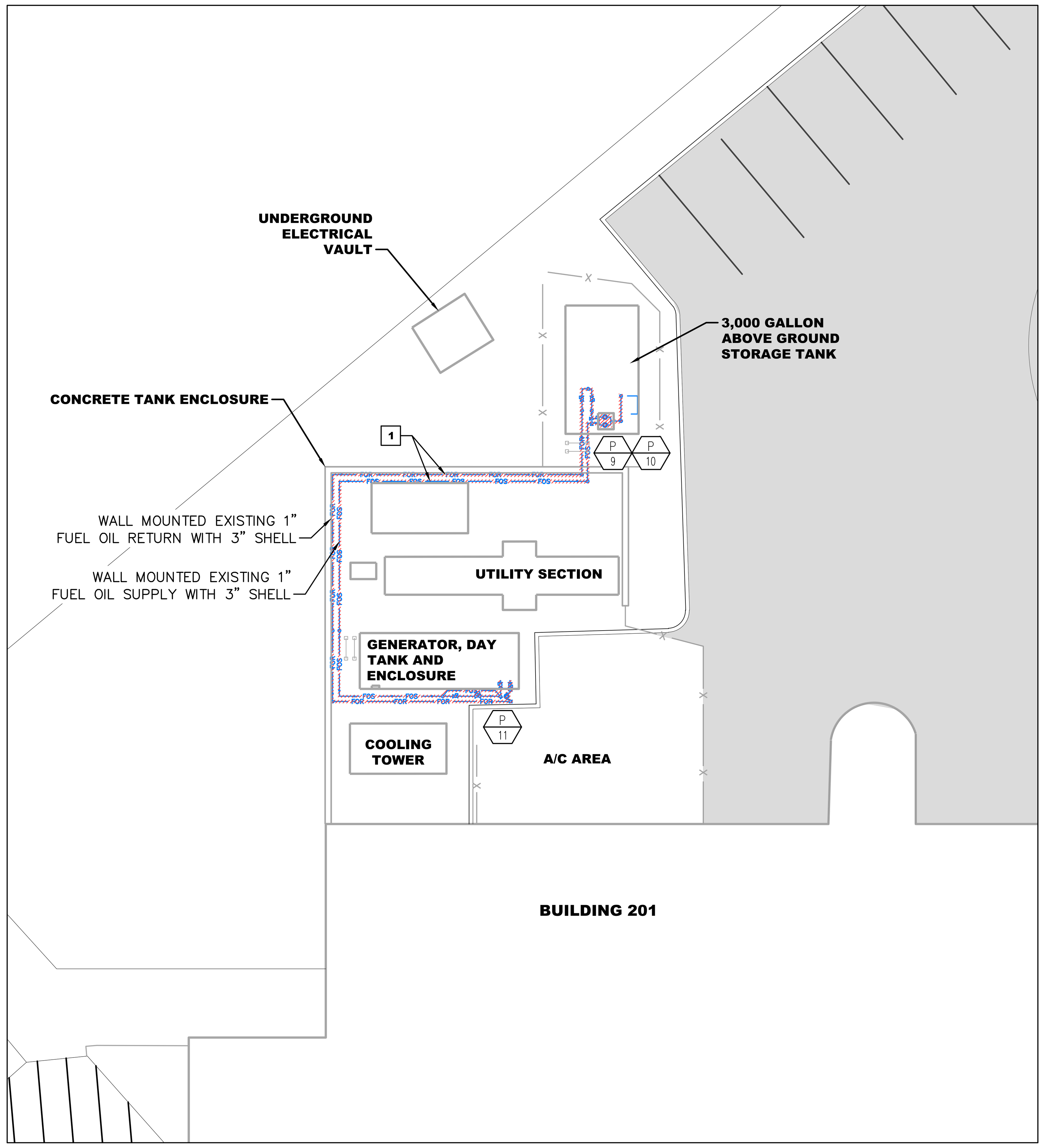

MARE ISLAND DEMO PLAN

KEYED DEMO NOTES:

1 NOTED PIPING AND APPURTENANCES SHALL BE REPLACED UP TO THE DAY TANKS ONLY.

2 REMOVE EXISTING LEAK DETECTION SYSTEM COMPONENTS INCLUDING SENSORS, PREFABRICATED LEAK DETECTION INSERTION BASIN, AND ALL ASSOCIATED POWER AND DATA CONNECTIONS FROM LEAK DETECTION PIT. CONCRETE LEAK DETECTION PIT TO BE DEMOLISHED.

3 EXISTING ASPHALT TO BE REMOVED.

4 EXISTING CURB AND GUTTER TO BE REMOVED.

5 REMOVE EXISTING LEAK DETECTION SYSTEM CONTROLLER AND ALL ASSOCIATED POWER AND DATA CONNECTIONS. SEE ASSOCIATED ELECTRICAL PLANS FOR ADDITIONAL DETAIL.

6 CONTRACTOR TO SEAL OPENINGS LEFT BY THE REMOVED FUEL PIPES WITH NON–SHRINK, FUEL–RESISTANT GROUT OR CONCRETE PATCH MATERIAL TO RESTORE THE WALL'S FIRE RATING AND STRUCTURAL INTEGRITY. SEE SHEET M–501 FOR PIPE PENETRATION DETAIL. PIPING CROSSINGS BELOW GRADE OF THE WALL SHALL BE UNDER THE CONTRACTOR'S MEANS AND METHODS, INCLUDING COORDINATION, SUPPORT, AND PROTECTION, IN ACCORDANCE WITH APPLICABLE CODES AND PROJECT REQUIREMENTS.

UNCC CALL BEFORE YOU DIG 811 OR 1-800-642-2444

Utility Notification Center of California
Administrative Office 4055 Port Chicago Hwy #100, Concord, CA. 94520

CALL 2 BUSINESS DAYS IN ADVANCE BEFORE YOU DIG, GRADE OR EXCAVATE FOR THE MARKING OF UNDERGROUND MEMBER UTILITIES.

CALIBRE ENGINEERING, INC. ASSUMES NO RESPONSIBILITY FOR EXISTING UTILITY LOCATIONS (HORIZONTAL AND VERTICAL). THE EXISTING UTILITIES SHOWN ON THIS DRAWING HAVE BEEN PLOTTED FROM THE BEST AVAILABLE INFORMATION. IT IS, HOWEVER, THE RESPONSIBILITY OF THE CONTRACTOR TO FIELD VERIFY THE LOCATIONS OF ALL UTILITIES PRIOR TO THE COMMENCEMENT OF ANY CONSTRUCTION ACTIVITIES.

0 5 10 20
1 inch = 10 ft. Horizontal

NOT FOR CONSTRUCTION

6/14/2009 12:39:03 PM

File Path

Revisions: | Date:

CONSULTANT

Calibre
Calibre Engineering, Inc.
8822 South Ridgeline Boulevard, Suite 310
Highlands Ranch, CO 80129 (303) 730-0434
www.calibre-engineering.com
Civil Engineering | Structural Engineering | Whitewater

ARCHITECT/ENGINEER OF RECORD

NEI Northeast Infrastructure, LLC
34 BROWN STREET
HONESDALE, PA 18431
OFFICE : (570) 253-0846
WWW.NEINFRA.COM

STAMP

35754
03-02-2026

Office of Construction and Facilities Management

VA U.S. Department of Veterans Affairs

Drawing Title: MARE ISLAND CAMPUS - DEMO PLAN	Phase: BID DOCUMENTS	Project Title: CORRECT MARTINEZ & MARE ISLAND GENERATOR FUEL LINES	Project Number: 612-23-005
			Building Number:
Approved: Project Director: VA SIERRA PACIFIC NETWORK (VISN 21) VA NORTHERN CALIFORNIA HEALTHCARE SYSTEM		Location: 150 MUIR ROAD MARTINEZ, CA 94553; 201 WALNUT AVENUE MARE ISLAND, CA 94592	Drawing Number: CD-002
		Issue Date: 04/17/2026; Checked: JG; Drawn: NS	

VA FORM 08 - 6231

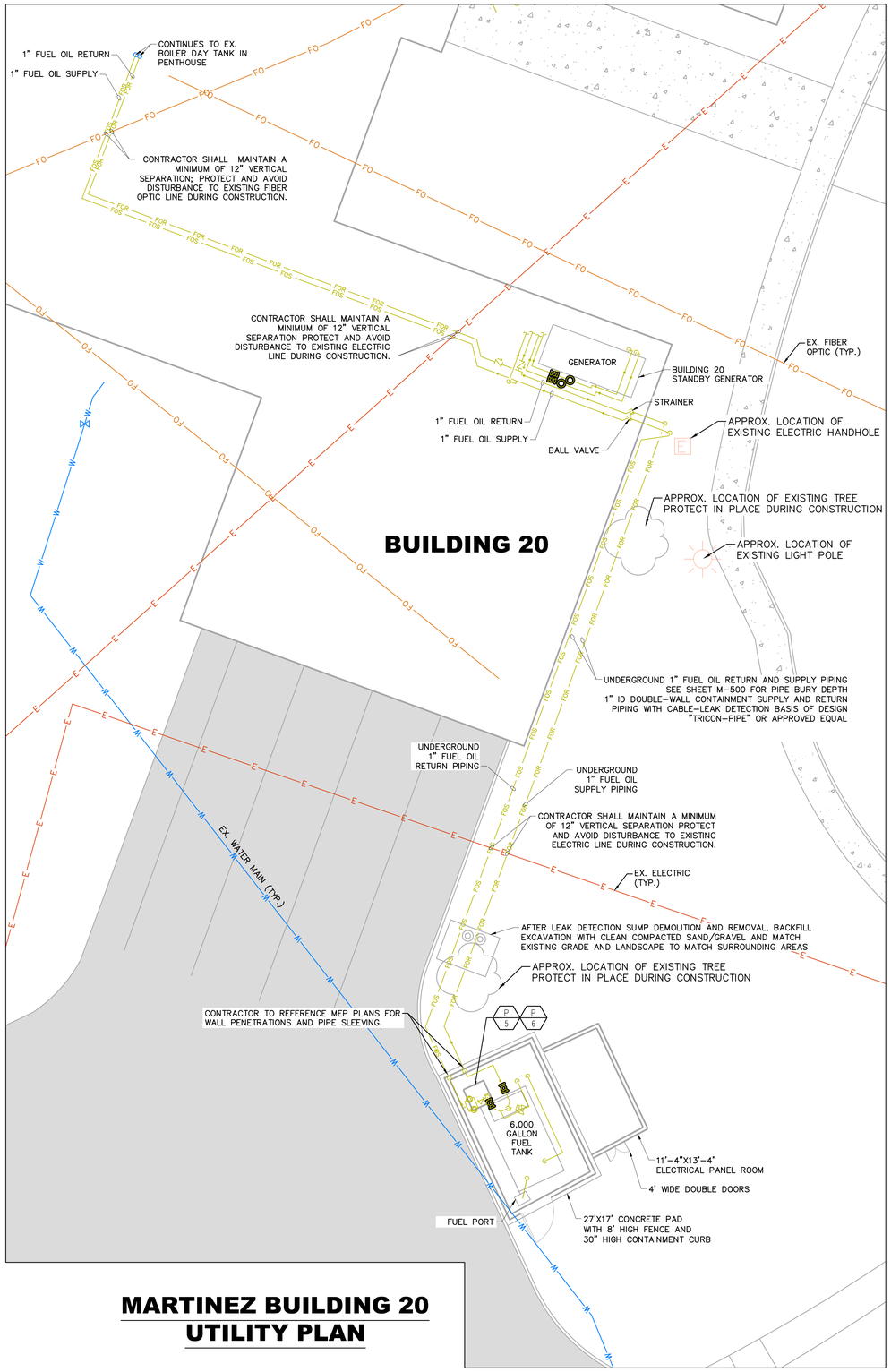

MARTINEZ BUILDING 20
UTILITY PLAN

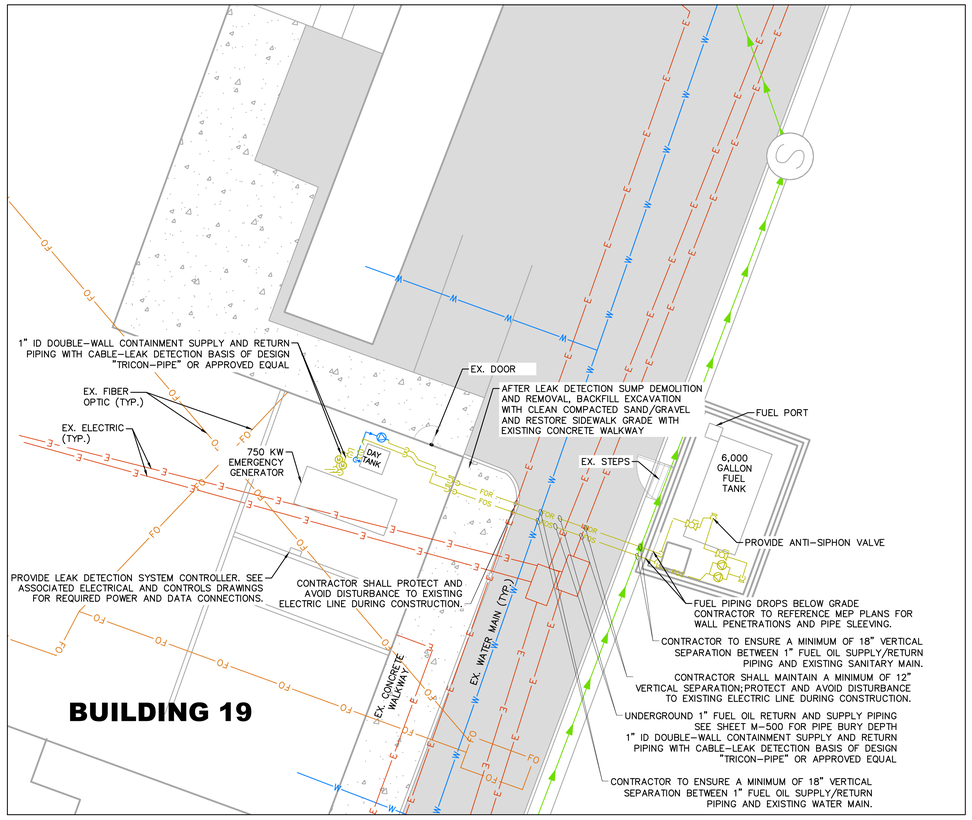

MARTINEZ BUILDING 19
UTILITY PLAN

ENGINEER NOTES:

1. CONTRACTOR SHALL INSPECT AND VERIFY ALL FIELD DIMENSIONS AND SITE CONDITIONS PRIOR TO COMMENCEMENT OF WORK. CONTRACTOR TO NOTIFY ENGINEER OF ANY DISCREPANCIES.
2. CONTRACTOR TO MAINTAIN DRAINAGE TO EXISTING INFRASTRUCTURE AND ENSURE THAT CONSTRUCTION ACTIVITY DOES NOT ALTER EXISTING DRAINAGE DESIGN.
3. CONTRACTOR TO MAINTAIN DUST CONTROL DURING CONSTRUCTION AND REDUCE SEDIMENT LEAVING THE SITE BY FOLLOWING LOCAL BMP'S.
4. CONTRACT TO ENSURE TRAFFIC CONTROL IS MAINTAINED AND ADEQUATE THROUGHOUT CONSTRUCTION.
5. CONTRACTOR SHALL DISPOSE OF EXISTING MATERIAL THAT HAS BEEN REMOVED FROM THE SYSTEM AND DISPOSE OF UNUSED FUEL. CONTRACTOR SHALL ENSURE THAT DISPOSAL METHODS THAT COMPLY WITH LOCAL, STATE, AND FEDERAL REGULATIONS ARE UTILIZED.
6. CONTRACTOR SHALL INSTALL REPLACEMENT FUEL PIPING IN PARALLEL TO EXISTING FUEL PIPING IN ALL LOCATIONS. SEE SHEET M-501 FOR PIPE PENETRATION DETAIL.
7. CONTRACTOR SHALL CONNECT THE EMERGENCY GENERATOR TO THE INSTALLED REPLACEMENT FUEL OIL SYSTEM DURING OFF HOURS. THIS CHANGE-OVER MUST BE COMPLETED PRIOR TO REGULAR BUSINESS HOURS.
8. CONTRACTOR SHALL UTILIZE EXISTING FUEL PIPING AND EQUIPMENT TO ENSURE THE EMERGENCY GENERATOR MAINTAINS OPERATION THROUGHOUT THE DURATION OF CONSTRUCTION.
9. CONTRACTOR SHALL PERFORM UNDERGROUND UTILITY LOCATIONS TO IDENTIFY THE HORIZONTAL AND VERTICAL POSITION OF ALL EXISTING UTILITIES. SUBMIT FINDINGS TO THE A&E FIRM FOR REVIEW AND APPROVAL PRIOR TO ANY EXCAVATION OR DIGGING.

LEGEND

- PROP. FUEL OIL SUPPLY — FOS
- PROP. FUEL OIL RETURN — FOR
- PROP. PUMP
- EX. SANITARY MAIN
- EX. WATER MAIN — W — W
- EX. STORM DRAIN INLET
- EX. POWER POLE
- EX. LIGHT POLE
- EX. UNDERGROUND ELECTRIC — E
- EX. FIBER OPTIC — FO
- EX. GAS LINE — E — E
- EX. FUEL OIL SUPPLY — FOS — FOS
- EX. FUEL OIL RETURN — FOR — FOR
- EX. ASPHALT PAVEMENT
- EX. CONCRETE

811 UNCC CALL BEFORE YOU DIG 811 OR 1-800-642-2444
Utility Notification Center of California
Administrative Office 4055 Port Chicago Hwy #100, Concord, CA. 94520

CALL 2 BUSINESS DAYS IN ADVANCE BEFORE YOU DIG, GRADE OR EXCAVATE FOR THE MARKING OF UNDERGROUND MEMBER UTILITIES.

CALIBRE ENGINEERING, INC. ASSUMES NO RESPONSIBILITY FOR EXISTING UTILITY LOCATIONS (HORIZONTAL AND VERTICAL). THE EXISTING UTILITIES SHOWN ON THIS DRAWING HAVE BEEN PLOTTED FROM THE BEST AVAILABLE INFORMATION. IT IS, HOWEVER, THE RESPONSIBILITY OF THE CONTRACTOR TO FIELD VERIFY THE LOCATIONS OF ALL UTILITIES PRIOR TO THE COMMENCEMENT OF ANY CONSTRUCTION ACTIVITIES.

0 5 10 20
1 inch = 10 ft. Horizontal

NOT FOR CONSTRUCTION

Revisions:	Date:

CONSULTANT
Calibre
Calibre Engineering, Inc.
8822 South Ridgeline Boulevard, Suite 310
Highlands Ranch, CO 80129 (303) 730-0434
www.calibre-engineering.com
Civil Engineering | Structural Engineering | Whitewater

ARCHITECT/ENGINEER OF RECORD
NEI Northeast Infrastructure, LLC
34 BROWN STREET
HONESDALE, PA 18431
OFFICE : (570) 253-0846
WWW.NEINFRA.COM

STAMP
COLORADO REGISTERED PROFESSIONAL ENGINEER 35754 03-02-2026 PROFESSIONAL ENGINEER

Office of Construction and Facilities Management
VA U.S. Department of Veterans Affairs

Drawing Title: MARTINEZ CAMPUS - UTILITY PLAN	Phase: BID DOCUMENTS
Approved: Project Director: VA SIERRA PACIFIC NETWORK (VISN 21) VA NORTHERN CALIFORNIA HEALTHCARE SYSTEM	
Project Title: CORRECT MARTINEZ & MARE ISLAND GENERATOR FUEL LINES	Project Number: 612-23-005
Location: 150 MUIR ROAD MARTINEZ, CA 94553 / 201 WALNUT AVENUE MARE ISLAND, CA 94592	Building Number:
Issue Date: 04/17/2026	Checked: JG
Drawn: NS	Drawing Number: CU-001

6/14/2009 12:28:03 PM
File Path:
VA FORM 08 - 6231

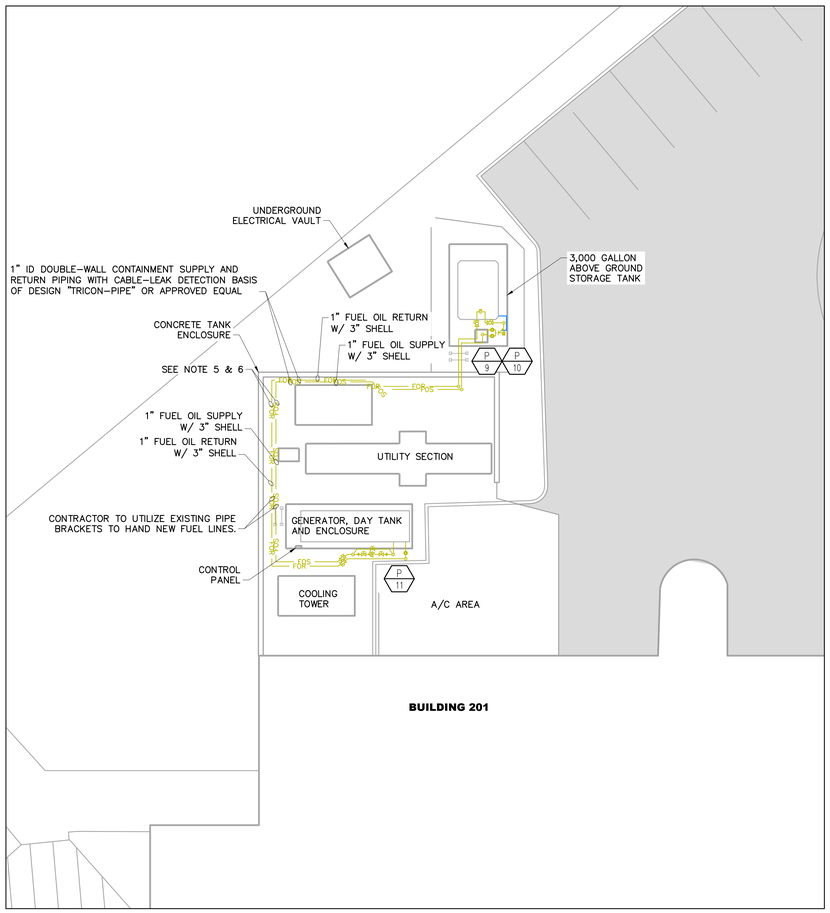

MARE ISLAND
UTILITY PLAN

ENGINEER NOTES:

1. CONTRACTOR SHALL INSPECT AND VERIFY ALL FIELD DIMENSIONS AND SITE CONDITIONS PRIOR TO COMMENCEMENT OF WORK. CONTRACTOR TO NOTIFY ENGINEER OF ANY DISCREPANCIES.
2. CONTRACTOR TO MAINTAIN DRAINAGE TO EXISTING INFRASTRUCTURE AND ENSURE THAT CONSTRUCTION ACTIVITY DOES NOT ALTER EXISTING DRAINAGE DESIGN.
3. CONTRACTOR TO MAINTAIN DUST CONTROL DURING CONSTRUCTION AND REDUCE SEDIMENT LEAVING THE SITE BY FOLLOWING LOCAL BMP'S.
4. CONTRACT TO ENSURE TRAFFIC CONTROL IS MAINTAINED AND ADEQUATE THROUGHOUT CONSTRUCTION.
5. CONTRACTOR SHALL DISPOSE OF EXISTING MATERIAL THAT HAS BEEN REMOVED FROM THE SYSTEM AND DISPOSE OF UNUSED FUEL. CONTRACTOR SHALL ENSURE THAT DISPOSAL METHODS THAT COMPLY WITH LOCAL, STATE, AND FEDERAL REGULATIONS ARE UTILIZED.
6. CONTRACTOR SHALL INSTALL REPLACEMENT FUEL PIPING IN PARALLEL TO EXISTING FUEL PIPING IN ALL LOCATIONS. SEE SHEET M-501 FOR PIPE PENETRATION DETAIL.
7. CONTRACTOR SHALL CONNECT THE EMERGENCY GENERATOR TO THE INSTALLED REPLACEMENT FUEL OIL SYSTEM DURING OFF HOURS. THIS CHANGE-OVER MUST BE COMPLETED PRIOR TO REGULAR BUSINESS HOURS.
8. CONTRACTOR SHALL UTILIZE EXISTING FUEL PIPING AND EQUIPMENT TO ENSURE THE EMERGENCY GENERATOR MAINTAINS OPERATION THROUGHOUT THE DURATION OF CONSTRUCTION.
9. CONTRACTOR SHALL PERFORM UNDERGROUND UTILITY LOCATIONS TO IDENTIFY THE HORIZONTAL AND VERTICAL POSITION OF ALL EXISTING UTILITIES. SUBMIT FINDINGS TO THE A&E FIRM FOR REVIEW AND APPROVAL PRIOR TO ANY EXCAVATION OR DIGGING.

LEGEND

- PROP. FUEL OIL SUPPLY — FOS
- PROP. FUEL OIL RETURN — FOR
- PROP. PUMP
- EX. SANITARY MAIN
- EX. WATER MAIN — W — W
- EX. STORM DRAIN INLET
- EX. POWER POLE
- EX. LIGHT POLE
- EX. UNDERGROUND ELECTRIC — E
- EX. FIBER OPTIC — FO
- EX. GAS LINE — E — E
- EX. FUEL OIL SUPPLY — FOS — FOS
- EX. FUEL OIL RETURN — FOR — FOR
- EX. ASPHALT PAVEMENT
- EX. CONCRETE

811 UNCC CALL BEFORE YOU DIG 811 OR 1-800-642-2444
Utility Notification Center of California
Administrative Office 4055 Port Chicago Hwy #100, Concord, CA. 94520

CALL 2 BUSINESS DAYS IN ADVANCE BEFORE YOU DIG, GRADE OR EXCAVATE FOR THE MARKING OF UNDERGROUND MEMBER UTILITIES.

CALIBRE ENGINEERING, INC. ASSUMES NO RESPONSIBILITY FOR EXISTING UTILITY LOCATIONS (HORIZONTAL AND VERTICAL). THE EXISTING UTILITIES SHOWN ON THIS DRAWING HAVE BEEN PLOTTED FROM THE BEST AVAILABLE INFORMATION. IT IS, HOWEVER, THE RESPONSIBILITY OF THE CONTRACTOR TO FIELD VERIFY THE LOCATIONS OF ALL UTILITIES PRIOR TO THE COMMENCEMENT OF ANY CONSTRUCTION ACTIVITIES.

0 5 10 20
1 inch = 10 ft. Horizontal

NOT FOR CONSTRUCTION

Revisions:	Date:

CONSULTANT
Calibre
Calibre Engineering, Inc.
8822 South Ridgeline Boulevard, Suite 310
Highlands Ranch, CO 80129 (303) 730-0434
www.calibre-engineering.com
Civil Engineering | Structural Engineering | Whitewater

ARCHITECT/ENGINEER OF RECORD
NEI Northeast Infrastructure, LLC
34 BROWN STREET
HONESDALE, PA 18431
OFFICE : (570) 253-0846
WWW.NEINFRA.COM

STAMP
REGISTERED PROFESSIONAL ENGINEER 35754 03-02-2026 CIVIL CALIFORNIA

Office of Construction and Facilities Management
VA U.S. Department of Veterans Affairs

Drawing Title: MARE ISLAND CAMPUS - UTILITY PLAN	Phase: BID DOCUMENTS
Approved: Project Director: VA SIERRA PACIFIC NETWORK (VISN 21) VA NORTHERN CALIFORNIA HEALTHCARE SYSTEM	

Project Title: CORRECT MARTINEZ & MARE ISLAND GENERATOR FUEL LINES	Project Number: 612-23-005
	Building Number:
Location: 150 MUIR ROAD MARTINEZ, CA 94553 — 201 WALNUT AVENUE MARE ISLAND, CA 94592	Drawing Number: CU-002
Issue Date: 04/17/2026 — Checked: JG — Drawn: NS	

6/14/2026 12:39:03 PM
File Path
VA FORM 08 - 6231

VHA INFECTION CONTROL RISK ASSESSMENT FOR CONSTRUCTION, RENOVATION AND MAINTENANCE

Introductory Information and Instructions

Use this template as a baseline for performing facility Infection Control Risk Assessments (ICRAs) for construction, renovation, and maintenancework (referred to as the "activity" in this document). The template provides minimum requirements for categorizing activity types and patient risk to determine the level of precautions needed to prevent infection risks. Facilities maycustomize this template to incorporate site-specific information and/or to add more stringent criteria.

This VHA ICRA template pertains specifically to infection prevention. It must be used if required by the VHA Pre-Construction Risk Assessment (PCRA) for the activity. NOTE: The PCRA addresses other activity-related safety concerns (e.g., vibration, noise, hazardous materials) outside the scope of the ICRA.

To complete the template:

1. Use Table 1 to identify the category of the construction, renovation and/or maintenance activity.
2. Use Table 2to identify the areas affected by the activity.
3. Use Table 3to identify the overall patient risk category that will be affected by the activity.
4. Use Table 4to determine the level of infection prevention and control precautions needed forthe activity.

Once all 4 stepsabove are completed: Refer to Table 5for the minimum required control measures for the level of infection prevention and control precautions needed for the activity. Refer to Table 6 for the minimum infection prevention and controlmeasures required on completion of the activity.

PERMIT: See the last page of this document for a fillable permit form to be used for posting at the activity site as needed.

Table 1 -Construction, Renovation, and/or Maintenance Activity Category

NOTE: If any of the bulleted criteria in a higher activity category pertains to the work that will be done (even if the other criteria are in a lower category), use the higher activity category for the VHA ICRA.

Activity Category determined from Table 1 (A, B, C, or D): ☐

Category A	Inspection and/or facility upkeep generally defined as follows: • Work can be completed in a single shift, not to exceed 10 hours. • Patients and/or employees may be in the area depending on the activity. • Work that does not create dust or debris. • Removal of ceiling tile or access to mechanical or electrical chase for visual inspection limited to 1 tile per 50 square feet with limited exposure time (not to exceed an hour for each tile) within the shift. • Minor interior updates (e.g., replacing floor or ceiling tiles, carpentry work to include hanging signage, and painting without sanding) that do not create dust or debris. • Limited building system maintenance such as basic plumbing on potable systems (e.g., faucet replacement)or basic electrical work such as replacement of light bulbs, receptacles, or switches.
Category B	General maintenance and repair work generally defined as follows: • Prolonged inspection and work that may take longer than a single shift but not exceeding a week. • Patients and employees are not to be in the area until activity is completed. • Work that creates minimal dust and debris. • Interior finish or surface repairs, updates,or modifications such as repair of firewalls and barriers, and new flooring that produces minimal dust and debris. Controlled sanding activities (e.g., wet or dry sanding) that produce minimal dust and debris. • Plumbing work such as installation or replacement of a single fixture or piping for a single fixture. Any work on sanitary plumbing including snaking of drains. • Electrical work such as installation of cabling/wiring/conduit for a singledevice, installation of new device such as a light fixture that produces minimal dust and debris. • Air Handler and/or fan shutdown/startup and HVAC work such as replacement of a single diffuser, single terminal unit or a single device that produces minimal dust and debris.
Category C	Small-scale construction, renovation, or maintenance generally defined as follows: • Work requiring longer than a single week to complete but not exceeding 6 months. • Patients and employees are not to be in the area until activity is completed. • Demolition/removal of preexisting floor covering, casework, lay-in ceiling, or other architectural elements. • Demolition/removal of more than 32 ft2of drywall/framing, hard ceilings,and doors/framing and minimal infrastructure such as electrical circuits and branch piping. • Installation of new walls, ceilings and doors including framing, drywall/plaster and associated work. • Plumbing work such as the installation of new sinks, showers and toilets and associated plumbing. • Shut down of sections of potable water systems. • Electrical work such as installation of conduit and wire for lighting, receptacles and switches for an area, the installation of conduit and wire for new devices such as terminal units, fans etc. • Modification of existing fire alarm and suppression systems. • Mechanical work such as the installation of ductwork, diffusers,and terminal units for an area.
Category D	Large-scale construction, renovation, or maintenance generally defined as follows: • Work exceeding 6 months in duration. • Patients and employees are not to be in the area until activity is completed. • Large-scale demolition of building components and infrastructure including removal of multiple doors, walls, framing, ceilings, flooring, piping, electrical and HVAC. • The installation building components such as new walls, ceilings and doors including framing, drywall and associated plaster work. • Plumbing work such as the installation of: o new medical gas systems, o steam/heating hot water, condensate systems, o multiple sinks, showers and toilets including associated plumbing. • Shutdown of potable water, steam/heating hot water, condensate, and medical gas systems. • Electrical work such as installation of electrical feeders, distribution panels, conduit and wire for lighting, receptacles and switches for an area, the installation of conduit and wire for new devices such as terminal units, fans etc. • Installation of fire alarm and suppression systems. • Electrical shutdown of multiple panels. • Mechanical work such as the installation of air handling equipment, associated ductwork, diffusers, heat exchangers, terminal units and controls.

Table 2 -Affected Area Assessment

Identify the areas and associated patients that will be affected by the construction/renovation/maintenance activity (see the Figurefor a visual representation of adjacent affected areas).

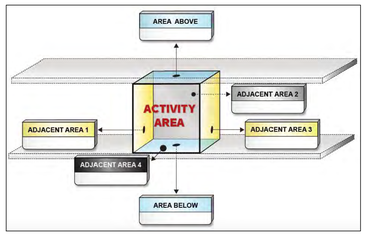

Figure: Isometric drawing of affected area assessment

Area	Service(s)/Type(s)of Area(s) (e.g., OR, Unit/Ward, Sterile Processing, Administrative, etc.)*	Point of Contact(POC)	POC Contact Information
Activity Area**			
AreaAbove			
AreaBelow			
Adjacent Area1			
Adjacent Area2			
Adjacent Area3			
Adjacent Area4			

*There may be more than one Service/type of area for each row.List all.
**List the area(s) in which the construction/renovation/maintenance activity will occur.
NOTE: When the Activity Category is B, C, or D, the control measures are determined by the Patient Risk in the adjacent affected areas.

Table 3 -Patient Risk Category

Using Table 3, identify the patient risk category for each area listed in Table 2. Of the patient risk categories identified, select the one with the greatest risk as the overall Patient Risk Category for the activity.

Overall Patient Risk Category determined from Table 3 (Low, Medium, High, or Highest): ☐

Low Risk	Medium Risk	High Risk	Highest Risk
Non-patient care areas such as:	Patient care support areas such as:	Patient care areas such as:	Procedural, invasive, sterile support and highly compromised patient care areas such as:
• Public hallways and gathering areas not in clinical areas • Office areas not in clinical areas • Breakrooms not in clinical areas • Bathrooms or locker rooms not in clinical areas • Mechanical/electrical rooms not in clinical areas	• Waiting areas • Clinical engineering (biomedical) • Materials management • Sterile processing department–dirty side • Kitchen, cafeteria, gift shop, coffee shop, and food kiosks	• Patient care rooms and areas, including spinal cord injury units • All acute care units, including mental health • All outpatient units and clinics • Emergency department • Community Living Centers, domiciliaries, and transitional residences • Employee health • Pharmacy–general work zone • Medication rooms and clean utility rooms • Imaging suites–diagnostic imaging • Laboratory	• All transplant units • All intensive care units • All oncology units and chemotherapy/infusion centers • OR theaters and restricted areas • Hemodialysis units • Procedural rooms* • Pharmacy compounding area • Sterile processing department–clean side • Transfusion services • Imaging suites–interventional imaging • Dedicated isolation wards/units for infectious diseases

*Procedural Rooms are designated for the performance of patient care activities that may require high-level disinfected or sterile instruments and some environmental controls but is not required to be performed with the environmental controls of an operating room (OR). The room is intended for procedures that are performed in an aseptic surgical field and penetrates the protective surfaces of a patient's body (e.g., subcutaneous tissue, mucous membranes, cornea) or entry into or opening of a sterile body cavity. Examples of these spaces include, and are not limited to, Cardiac Catheterization Suites, Electrophysiology Suites, Endovascular/GI Suites, Angio Suites and other spaces which may have high risk patient populations.

Table 4 -Level of Infection Prevention and Control Precautions

Match the Overall Patient Risk Category (Low, Medium, High, Highest)determinedfrom Table 3with the planned Construction/Renovation/MaintenanceActivity Category(A, B, C, D) from Table 1to determinetheminimumLevelof Infection Prevention and ControlPrecautions (I, II, III, or IV)using Table 4 below.

Level of Precautions determined from Table 4 (I, II, III, or IV): ☐

Patient Risk Category	Activity Category A	B	C	D
Low Risk	I	II	II	III
Medium Risk	I	II	III	IV
High Risk	I	II	IV	IV
Highest Risk	II	III	IV	IV

An infection prevention and control permit is required for Level III and Level IV. Consult with Infection Prevention and Control for Level I and Level II.

Table 5 -RequiredInfection Prevention and Control Measures, by Level of Precautions

Controls defined below for the Level of Precautions identified for the activity must be in place before the activitybegins and maintained until work is completedand the area is activated. Control measures for eachPrecautionLevel must also include the control measures inthe preceding Level(s).

As the activity progresses, a full re-evaluation of remaining activity type and patient risk is required prior to downgrading the Level of Precautions.

Level of Precautions	Control Measures
Level I	1. Perform work activity in a manner that does not create dust. 2. Immediately replace any ceiling tile, close access panels, etc., upon completion of work. 3. Any materials and equipment being brought into the facility must be free of contaminants and loose material.
Level II	All control measures in Level Iand the following: 1. Provide active means to control airborne dust from dispersing into occupied areas and/or water mist surface to control dust (e.g., Mobile Dust Containment Cart or some other system). 2. Ensure worker clothing is clean and free of visible dust before leaving the work area. 3. Remove or isolate air diffusers (supply and return) to protect the HVAC system from dust and reduce air turbulence. Rebalance system to address diffuser isolation. 4. When the work involves or impacts potable water systems including stagnation due to reduced usage, the piping shall be flushed twice a week or isolated from the main system. 5. Seal doors to prevent dust migration. 6. Contain all trash and debris in the work area. Perform daily cleaning and disposal of trash (covered) from work area using an identified exit route. 7. Any equipment, tools, or materials removed from the work area must be in sealed containers and/or cleaned of dust and debris prior to removal from the area. 8. Nonporous/smooth and cleanable containers (with a hard lid) must be used to transport trash and debris from the construction areas. These containers must be damp-wiped cleaned and free of visible dust/debris before leaving the contained work area. 9. Install a sticky (dust collection) mat at entrance of contained work area based on facility policy. Sticky mats must be changed routinely and when visibly soiled. 10. Maintain clean surroundings when area is not contained by damp mopping or HEPA vacuuming surfaces at least daily.
Level III	All control measures in Levels I and IIand the following: 1. Ensure availability of equipment for cleaning hands. 2. Construct and complete critical barriers meeting NFPA 241 requirements. Barriers must extend to the ceiling or if ceiling tile is removed, to the deck above. 3. All (plastic or hard) barrier construction activities must be completed in a manner that prevents dust release. Plastic barriers must be effectively affixed to floor and ceiling (or floor/roof deck above) and secure from movement or damage. 4. Seal all penetrations in containment barriers, including floors and ceiling, using approved materials (UL schedule firestop if applicable for barrier type). 5. Maintain .01 inches /water gauge negative pressurization of the entire workspace by use of HEPA exhaust air systems directed outdoors,or comply with the alternative method outlined in Appendix A of this document.These control measuresmust be maintained continuously 24/7 for the duration of the project. HEPA filtered exhaust if discharged directly to the outdoors must be at a distance of 25 feet or greater from entrances, air intakes and operable windows. Exhausting discharged air into shared or recirculating HVAC systems, or other shared exhaust systems (e.g., bathroom exhaust) is prohibited. 6. Install a differential pressure sensing device (e.g., magnehelic, manometer, or digital monitoring) on exterior of work containment to continually monitor and document negative pressurization. The "ball in the wall" or similar apparatus are not acceptable.
Level IV	All control measures in Levels I, II and IIIand the following: 1. Barriers must be hard barriers unless temporary to install final barrier. 2. Containment must include an anteroom to ensure pressure control.Anteroom must be large enough for equipment staging, cart cleaning, workers' PPE and cleaning. 3. Worker clothing and/or PPE must be removed or clean and free of visible dust before leaving the work area anteroom. HEPA vacuuming of clothing or use of cover suits is acceptable. 4. Workers must wear shoe covers or have a method to clean shoes in anteroom. Shoe covers must be removed prior to exiting the anteroom to the occupied space (non-work area). Damaged shoe covers must be changedimmediately.

Table 6 -Minimum Infection Prevention and Control Measures Required Upon Completion of the Activity

Controls defined below shall be completed upon completion oftheactivity and inspected prior to terminating measures defined in Table 5.

Level of Precautions	Measures
Levels I -II	Cleaning: 1. Clean work areas including all environmental surfaces, high horizontal surfaces and flooring materials. 2. Check all supply and return air registers for dust accumulation on upper surfaces as well as air diffuser surfaces. HVAC Systems: 1. Remove isolation of HVAC system in areas where work is being performed. Verify that HVAC systems are clean and operational. 2. Verify the HVAC systems meet original airflow and air exchange design specifications. Water systems: 1. Until the potable water system is activated and in use, flushing shall continue at least twice per week in accordance with VHA Directive 1061.
Levels III -IV	Construction areas must be inspected by an infection preventionist and engineering representative (and others as determined by the facility) for final activity/project close out and removal of infection prevention and control measures. Work Area Cleaning: 1. Clean work areas including all environmental surfaces, high horizontal surfaces and flooring materials. 2. Check all supply and return air registers for dust accumulation on upper surfaces as well as air diffuser surfaces. Removal of Critical Barriers: 1. Critical barriers must remain in place during all work involving drywall removal, creation of dust and activities beyond simple touch-up work. The barrier may NOT be removed until a work area cleaning has been performed. Additional cleaning may be needed after removal of barrier. 2. All (plastic or hard) barrier removal activities must be completed in a manner that prevents dust release. Use the following precautions when removing hard barriers: i. Carefully remove screws and painter tape. ii. If dust will be generated during screw removal, use hand-held HEPA vacuum. iii. Drywall cutting is prohibited during removal process. iv. Clean all stud tracks with HEPA vacuum before removing outer hard barrier. v. Use a plastic barrier to enclose area if dust could be generated. Negative Air Requirements: 1. The use of negative air must be designed to remove contaminants from the work area. 2. Negative air devices (fans, filters, monitoring and documentation equipment) must remain operational at all times and in place for a period after completion of dust creating activities to remove contaminants from the work area and before removal of critical barriers. HVAC systems: 1. Upon removal of critical barriers, remove isolation of HVAC system in areas where work is being performed. 2. Verify that HVAC systems are clean and operational. 3. Verify and document through a TAB the HVAC systems meets original airflow and air exchange design specifications. Water systems: 1. Until the potable water system is activated and in use, flushing shall continue at least twice per week in accordance with VHA Directive 1061.

Infection Prevention and Control Construction/Renovation/Maintenance Permit

This page must be posted at the entrance to the project area for Level III and Level IV activities.

Unique permit number:			
Location of construction/renovation/maintenance			
Project manager		Project start date	
Contact phone number		Completion date	
Contractor		Permit expiration date	

Activity Category (A, B, C, or D)		OverallPatient Risk Category (Low, Medium, High, or Highest)		Level of Infection Prevention and Control Precautions (I, II, III, or IV)	

Level of Precautions	Control measuresto be in place for the duration of the activity (Check the box for theactivity's Level of Precautions to indicate the Control Measures)
Level I ☐	1. Perform work activity in a manner that does not create dust. 2. Immediately replace any ceiling tile, close access panels, etc., upon completion of work. 3. Any materials and equipment being brought into the facility must be free of contaminants and loose material.
Level II ☐	All control measures in Level I and the following: 1. Provide active means to control airborne dust from dispersing into occupied areas and/or water mist surface to control dust (e.g., Mobile Dust Containment Cart or some other system). 2. Ensure worker clothing is clean and free of visible dust before leaving the work area. 3. Remove or isolate air diffusers (supply and return) to protect the HVAC system from dust and reduce air turbulence. Rebalance system to address diffuser isolation. 4. When the work involves or impacts potable water systems including stagnation due to reduced usage, the piping shall be flushed twice a week or isolated from the main system 5. Seal doors, to prevent dust migration. 6. Contain all trash and debris in the work area. Perform daily cleaning and disposal of trash (covered) from work area using an identified exit route. 7. Any equipment, tools, or materials removed from the work area must be in sealed containers and/or cleaned of dust and debris prior to removal from the area. 8. Nonporous/smooth and cleanable containers (with a hard lid) must be used to transport trash and debris from the construction areas. These containers must be damp-wiped cleaned and free of visible dust/debris before leaving the contained work area. 9. Install a sticky (dust collection) mat at entrance of contained work area based on facility policy. Sticky mats must be changed routinely and when visibly soiled. 10. Maintain clean surroundings when area is not contained by damp mopping or HEPA vacuuming surfaces at least daily.
Level III ☐	All control measures in Levels I and II and the following: 1. Ensure availability of equipment for cleaning hands. 2. Construct and complete critical barriers meeting NFPA 241 requirements. Barriers must extend to the ceiling or if ceilingtile is removed, to the deck above. 3. All (plastic or hard) barrier construction activities must be completed in a manner that prevents dust release. Plastic barriers must be effectively affixed to floor and ceiling (or floor/roof deck above) and secure from movement or damage. 4. Seal all penetrations in containment barriers, including floors and ceiling, using approved materials (UL schedule firestop if applicable for barrier type). 5. Maintain .01 inches /water gauge negative pressurization of the entire workspace by use of HEPA exhaust air systems directed outdoors, or comply with the alternative method outline in Appendix A of the VHA ICRA template. These control measures must be maintained continuously 24/7 for the duration of the project. Exhausting discharged air into shared or recirculating HVAC systems, or other shared exhaust systems (e.g., bathroom exhaust) is prohibited. **Check box to indicate exhaust method**:Exterior ☐Alternative Interior Method:☐ 6. Install a differential pressure sensing device (e.g., magnehelic, manometer, or digital monitoring) on exterior of work containment to continually monitor and document negative pressurization. The "ball in the wall" or similar apparatus are not acceptable.
Level IV ☐	All control measures in Levels I, II and III and the following: 1. Barriers must be hard barriers unless temporary to install final barrier. 2. Containment must include an anteroom to ensure pressure control, Anteroom must be large enough for equipment staging, cartcleaning, workers' PPE and cleaning. 3. Worker clothing and/or PPE must be removed or clean and free of visible dust before leaving the work area anteroom. HEPA vacuuming of clothing or use of cover suits is acceptable. 4. Workers must wear shoe covers or have a method to clean shoes in anteroom Shoe covers must be removed prior to exiting the anteroom to the occupied space (non-work area). Damaged shoe covers must be changed immediately.

Additional requirements:			
Project Manager signature		Date	
Infection Preventionist signature		Date	

Revisions:	Date:

CONSULTANT

ARCHITECT/ENGINEER OF RECORD

NEI Northeast Infrastructure, LLC
34 BROWN STREET
HONESDALE, PA 18431
OFFICE : (570) 253-0846
WWW.NEINFRA.COM

STAMP

Office of Construction and Facilities Management

VA U.S. Department of Veterans Affairs

Drawing Title: ICRA GENERAL REQUIREMENTS	Phase: BID DOCUMENTS	Project Title: CORRECT MARTINEZ & MARE ISLAND GENERATOR FUEL LINES	Project Number: 612-23-005
Approved: Project Director: VA SIERRA PACIFIC NETWORK (VISN 21) VA NORTHERN CALIFORNIA HEALTHCARE SYSTEM		Location: 150 MUIR ROAD MARTINEZ, CA 94553 / 201 WALNUT AVENUE MARE ISLAND, CA 94592	Building Number: N/A
		Issue Date: 04/17/2026 / Checked: D.L.E. / Drawn: J.R.H.	Drawing Number: ICRA-00

File Path: 6/14/2008 12:39:03 PM

VA FORM 08 - 6231

VHA PRE-CONSTRUCTION RISK ASSESSMENT (PCRA)

PCRA Introductory Information and Instructions

Use this template as a baseline for performing facility Pre-Construction Risk Assessments (PCRA) for Construction, Renovation, and Maintenance work (referred to as the "activity" in this document). The template provides minimum requirements for categorizing activity type(s) and safety risk to determine the level of precautions needed to prevent impact related to Construction, Renovation and Maintenance on patients, employees, and contractors.

Ensure that the activity statement of work and any drawings available are used for the PCRA assessment and included in the project file with the completed PCRA.

Communication and coordination of all types of activity with affected areas are to be included among the control measures. The development of communication and coordination plans must begin during the activity planning phase.

Facilities may customize this template to incorporate site-specific information and requirements.

NOTE: *This VHA PCRA template pertains specifically to non-infection-related safety for Construction, Renovation, and Maintenance activities. It must be used in conjunction with the VHA Infection Control Risk Assessment (ICRA) for the activity, if required, which specifically addresses infection risks outside the scope of this PCRA.*

PERMIT: See the last page of this document for a fillable permit form to be used for posting at the activity site.

Activity Location:

Activity Name, Number, and/or Brief Description:

Table 1 - Construction, Renovation, and/or Maintenance Activity Type and Control Measures

NOTE: *If any of the bulleted criteria in a higher activity type pertains to the work that will be done (even if the other criteria are in a lower type), use the higher activity type for the VHA PCRA.*

Controls defined in Table 1 for the activity must be in place before the activity begins and maintained until work is completed and the area is activated. Control measures for each activity must also include the control measures in the preceding row(s).

As the activity progresses, a full re-evaluation of remaining activity type and risk is required prior to changing the level of control measures.

Activity Type determined from Table 1:

Activity Type and Description	Control Measures
Inspection/upkeep generally defined as follows: • Work can be completed in a single shift, not to exceed 10 hours. • Patients, employees and/or visitors may be in the area depending on the activity. • Work that does not create dust or debris. • Work that does not create vapors or fumes. • Removal of ceiling tile or access to mechanical or electrical chase for visual inspection that will not impair fire safety systems and are limited to 1 tile per 50 square feet with limited exposure time (not to exceed an hour for each tile) within the shift. • Minor interior updates (e.g., replacing floor or ceiling tiles, carpentry work to include hanging signage, and painting with hand tools) that do not create vibration or noise. • Limited building system maintenance that does not require Lock Out Tag Out (LOTO) such as plumbing on potable systems limited to faucet replacement, steam trap replacement etc. and electrical work such as replacement of bulbs, receptacles, or switches.	1. Immediately replace any ceiling tile, close access panels, etc., upon completion of work. 2. Site visits of construction area are required weekly by member of multi-disciplinary team. Site visits will be documented on standard checklist. 3. Site specific safety plan, task hazard analysis, and hazard communication required to be provided by the contractor and approved where a contact is in place. For internal work the shop involved must work with Safety to ensure proper precautions are in place. 4. Must address identified hazards and controls that will be implemented to ensure minimal impact to patients, employees, contractors and facility. 5. Communication and coordination plan for all affected areas

Small scale Construction, Renovation and general maintenance/repair work, generally defined as follows:
• Prolonged work that may take longer than a single shift but not exceeding six months.
• Patients and employees are not to be in the area until activity is completed.
• Work that creates some noise and vibration due to power tool use.
• Selective demolition/removal of preexisting floor covering, casework, lay-in ceiling, or other architectural elements that may
  ○ disturb asbestos, lead or silica
  ○ create the potential for falling objects
  ○ create vibration and/or noise in excess of 80 dB(A) in surrounding areas.
  ○ cause penetrations in fire or smoke barrier
• Plumbing work such as the installation of new sinks, showers and toilets and associated plumbing that requires utility outages or work on the steam system that may require:
  ○ LOTO
  ○ The use of compressed gas cylinders
• Electrical work such as installation of conduit and wire for lighting, receptacles and switches for an area, the installation of conduit and wire for new devices such as terminal units, fans etc. Electrical work such as installation of cabling/wiring/conduit for a single device, installation of new device such as a light fixture that require LOTO.
• Air Handler and/or fan shutdown/startup and HVAC work such as replacement of a single diffuser, single terminal unit, a single device and the installation of ductwork, diffusers, and terminal units for an area that may require:
  ○ Work on ladders
  ○ Rigging, hoisting or lifting of equipment or materials overhead
• Modification of existing fire alarm and suppression systems requiring system outages and ILSMs or obstruction of exits and or impact on corridors.
• Architectural, structural, or any other work that may cause vapors or fumes such as:
  ○ Roofing work
  ○ Flooring work
  ○ Painting or other large-scale use of such substances.
	All control measures in the row above and the following:
	1. Hazard communication chemical inventory required to be provided by the contractor and approved.
	2. Where construction, Renovation and maintenance are done in an accredited facility, and ILSM assessment is required to be done and ILSMs put into place in accordance with TJC LS.01.02.01 and the local facility policy including Fire watch if necessary. Staff is trained and the ILSM is verified regularly
	3. Hot Work or burn permits in place and staff trained
	4. LOTO procedures in place and staff trained on their use
	5. Site visits will be reviewed using the criteria in standardized guide.
	6. Daily inspections of the site are to be conducted by the General Contractor or shop supervisor and documented on their daily log.

Large-scale construction, renovation, or maintenance generally defined as follows:
• Work exceeding 6 months in duration.
• Patients and employees are not to be in the area until activity is completed.
• Excavation or heavy equipment use taking place
  ○ Dig safe required utility location
  ○ Trench safety
  ○ Dust control plan
  ○ Equipment exhaust, Noise, Vibration
• Confined space entry required (permit required or not)
• Requires crane work
  ○ General crane work
  ○ Lift over buildings
• Includes elevated work
  ○ Roof work, fall protection
  ○ Window work, scaffolding and fall protection
  ○ Odor control
• Welding, cutting or use of torches requiring burn permits
• Demolition of building components and infrastructure including removal of multiple doors, walls, framing, ceilings, flooring, piping, electrical and HVAC that may
  ○ require asbestos, lead or silica abatement
  ○ create the potential for falling objects
  ○ create vibration and/or noise in excess of 90 dB(A) in surrounding areas.
  ○ cause breaches to fire or smoke barrier
• The installation building components such as new walls, ceilings and doors including framing, drywall and associated plaster work that requires transport of significant materials through building and up elevators i.e., weight limits of floors and elevators
• Plumbing work requiring LOTO and system shutdown and startup such as the installation of:
  ○ new medical gas systems,
  ○ steam/heating hot water, condensate systems,
  ○ Potable water and sanitary drainage, multiple sinks, showers and toilets including associated plumbing.
• Electrical work such as installation of electrical feeders, distribution panels, conduit and wire for lighting, receptacles and switches for an area, the installation of conduit and wire for new devices such as terminal units, fans etc. requiring LOTO and system isolation.
• Installation of fire alarm and suppression systems requiring outages of those systems and ILSMs or closure of exits/corridors
• Mechanical work such as the installation of air handling equipment, associated ductwork, diffusers, heat exchangers, terminal units and controls requiring lifting and support of equipment and systems.
	All control measures in the two rows above and the following Activity Hazard Analyses and Control Plans (check all that apply):
	1. Excavation safety plan in place ☐
	2. Dust control plan in place ☐
	3. Pollution prevention plan in place ☐
	4. Dig safe paper work in place ☐
	5. Crane lift plan in place ☐
	  a. Crane placement
	  b. Crane swing
	  c. Crane load evaluation
	6. Fall protection plan in place and staff trained ☐
	7. Confined entry plan in place and staff trained ☐

Table 2. Affected Adjacent Area Assessment

In addition to the minimum precautions noted above for the Activity Type, it is critical that the activity be coordinated with the areas adjacent to the activity to ensure operations in those areas are not disrupted or impacted. List the adjacent areas in Table 2 below and develop activity-specific coordination plans and associated communication plans with each area to address activity work that could impact or disrupt the operation of the areas, in general as follows:

- If adjacent area is **vacant** (e.g., work outside, construction of new building, etc.):
  - Coordination is typically not necessary other than potentially traffic flow and pedestrian access.
- If adjacent area is **non-continuously occupied** (e.g., areas where outpatient care is provided, employee health, etc.):
  - Develop a list of activities that will potentially impact or disrupt the operation of the area (e.g., work involving noise, vibration or exit obstruction) and meet with POC to coordinate execution of work in a way that mitigates the impact (e.g., conduct work after hours).
- If adjacent area is **occupied continuously** (e.g., areas where inpatient care is provided, residential areas such as Community Living Centers, etc.):
  - Develop a list of activities that will potentially impact or disrupt the operation of the area (e.g., work involving noise, vibration or exit obstruction) and meet with POC to coordinate execution of work in a way that mitigates the impact (e.g., move affected party temporarily).

Area	Service(s)/Type(s) of Area(s) *(e.g., OR, Unit/Ward, Sterile Processing, Administrative, etc)**	Point of Contact (POC)	POC Contact Information	Construction plan communicated to POC?
Activity Area**				
Area Above				
Area Below				
Adjacent Area 1				
Adjacent Area 2				
Adjacent Area 3				
Adjacent Area 4				

* There may be more than one Service/type of area for each row. List all. The information entered on this table must be used in the ICRA if required.

** List the area(s) in which the construction/renovation/maintenance activity will occur.

Consult with Infection Prevention and Control regarding the assessment of potential patient infection risks associated with the activity and the need for control measures. For example, activities such as a boiler plant project and/or facility steam shutdown, if properly planned, should have minimal to no patient infection risk impacts and likely not to require an ICRA. See VHA Directive 7715 and the VHA ICRA Template for more information.

Is an ICRA required for the Activity? Yes ☐ No ☐

PRE-CONSTRUCTION RISK ASSESSMENT (PCRA) PERMIT

This page must be posted at the entrance to the project area, or other designated area

Unique permit number:			
Location and brief description of construction/renovation/maintenance			
Project manager		Project start date	
Contact phone number		Completion date	
Contractor or lead shop		Permit expiration date	

Activity Type *Inspection/Upkeep, Small-scale, or Large-scale)*	

Activity Type	Control measures to be in place for the duration of the activity *(Check the box for the Activity Type to indicate the Control Measures)*
Inspection/Upkeep ☐	1. Immediately replace any ceiling tile, close access panels, etc., upon completion of work. 2. Site visits of construction area are required weekly by member of multi-disciplinary team. Site visits will be documented on standard checklist. 3. Site specific safety plan, task hazard analysis, and hazard communication required to be provided by the contractor and approved. 4. Must address identified hazards and controls that will be implemented to ensure minimal impact patients, employees, contractors and facility. 5. Communication and coordination plan for all affected areas
Small-scale ☐	**All control measures in the row above and the following:** 1. Hazard communication chemical inventory required to be provided by the contractor and approved. 2. ILSMs in place and staff trained on situation 3. Hot Work or burn permits in place and staff trained 4. LOTO procedures in place and staff trained on their use 5. Site visits will be reviewed using the criteria in standardized guide. 6. Daily inspections of the site are to be conducted by the General Contractor and documented on their daily log.

Large-scale ☐	**All control measures in both rows above and the following Activity Hazard Analyses and Control Plans as applicable (check all that apply):**
	1. Excavation safety plan in place ☐
	2. Dust control plan in place ☐
	3. Pollution prevention plan in place ☐
	4. Dig safe paperwork in place ☐
	5. Crane lift plan in place ☐
	  a. Crane placement
	  b. Crane swing
	  c. Crane load evaluation
	6. Fall protection plan in place and staff trained ☐
	7. Confined entry plan in place and staff trained ☐

Additional requirements:			
Is an Infection Control Risk Assessment (ICRA) required for the Activity? Yes ☐ No ☐			
Infection Prevention and Control signature: Date:			
Project Manager signature		Date	
Safety Office signature		Date	
Chair or Co-Chair, Construction Safety Committee signature		Date	

*The location of all Activity Hazard Analyses and Control Plans (excavation, dust, pollution, etc.) as applicable shall be identified on this permit and shall be made available to all workers on the job.

GENERAL NOTE

1. CONTRACTOR SHALL COMPLETE AND SUBMIT PRE-CONSTRUCTION RISK ASSESSMENT TO THE STATION FOR APPROVAL PRIOR TO THE START OF CONSTRUCTION.

Revisions:	Date:

CONSULTANT

ARCHITECT/ENGINEER OF RECORD

NEI Northeast Infrastructure, LLC
34 BROWN STREET
HONESDALE, PA 18431
OFFICE : (570) 253-0846
WWW.NEINFRA.COM

STAMP

Office of Construction and Facilities Management

VA U.S. Department of Veterans Affairs

Drawing Title: PCRA GENERAL REQUIREMENTS	Phase: BID DOCUMENTS	Project Title: CORRECT MARTINEZ & MARE ISLAND GENERATOR FUEL LINES	Project Number: 612-23-005
Approved: Project Director: VA SIERRA PACIFIC NETWORK (VISN 21) VA NORTHERN CALIFORNIA HEALTHCARE SYSTEM		Location: 150 MUIR ROAD MARTINEZ, CA 94553 / 201 WALNUT AVENUE MARE ISLAND, CA 94592	Building Number: N/A
		Issue Date: 04/17/2026	Checked: D.L.E. / Drawn: J.R.H.
			Drawing Number: ICRA-01

6/14/2009 12:28:03 PM

File Path

VA FORM 08 - 6231

ICRA GENERAL REQUIREMENTS

1. CONTRACTOR TO COMPLY WITH ICRA REQUIREMENTS FOR WORK IN HOSPITAL BUILDING THROUGH–OUT DEMOLITION AND CONSTRUCTION.
2. PROVIDE TEMPORARY PLASTIC ZIPPER PARTITIONS FROM FLOOR TO UNDERSIDE OF DECK ABOVE TO SEAL AGAINST THE MIGRATION OF DUST AND DIRT ALONG ALL PATHS OF TRAVEL BETWEEN AREA OF WORK AND ADJACENT OCCUPIED AREAS.
3. PROVIDE PARTITIONS, AS REQUIRED ALONG THE PERIMETER BETWEEN AREA OF WORK AND EXISTING AREA TO REMAIN. PARTITIONS TO BE FROM FLOOR TO UNDERSIDE OF DECK ABOVE AND SEALED ALONG PERIMETER TO PREVENT MIGRATION OF DUST AND DIRT, WHERE TEMPORARILY NOT INSTALLED.
4. MAINTAIN NEGATIVE AIR PRESSURE WITHIN AREA OF WORK FOR DURATION OF DEMOLITION AND CONSTRUCTION ACTIVITIES AS REQUIRED.
5. BUILDING WILL BE CONTINUOUSLY OCCUPIED DURING CONSTRUCTION DURATION. MAINTAIN ACCESS TO STAIR EXITS AND FROM EXITS TO EXTERIOR.
6. PROVIDE STICKY WALK OFF MATS ON BOTH SIDES OF ALL DOORS.
7. ICRA PARTITIONS/SET–UP TO BE DONE DURING OFF HOURS.
8. ALL FLOOR OR UNDERSIDE OF DECK HOLES EXPOSED OR CREATED DURING DEMOLITION/CONSTRUCTION WILL BE SEALED IMMEDIATELY.
9. ALL ANTE ROOMS, ALL CLOTHING, TOOLS, AND MATERIALS (POST DEMOLITION PHASE) ARE TO BE HEPA VACUUMED EACH TIME THROUGH THE ANTE ROOM.
10. FULL GOWN AND BOOTIES ARE REQUIRED DURING DEMOLITION PHASE.
11. AS THE PERIMETER FLOOR EDGE IS EXPOSED, ANY OPENING AT THE SLAB EXTERIOR WALL SHALL BE SEALED IMMEDIATELY.
12. PROVIDE SWEEPS AND VERTICAL ASTRAGALS ON ALL ICRA DOORS AND STAIR TOWER DOORS.
13. MAINTAIN EGRESS TO ALL EXIT STAIR TOWERS AT ALL TIMES.
14. COORDINATE WITH ENGINEER ANY N.P.E. SHUTDOWNS THAT MAY BE REQUIRED.
15. TEMPORARY CONTAINMENT MEASURES PROVIDED MUST MEET HOSPITAL ICRA REQUIREMENTS. CONTRACTOR SHALL SUBMIT SHOP DRAWINGS FOR ALL TEMPORARY CONTAINMENT MEASURES FOR EACH CLASS AND AREA. APPROVAL MUST BE OBTAINED BEFORE ANY WORK CAN BEGIN.
16. PLASTIC ICRA BARRIERS SHALL NOT BE USED IN WORK AREAS WHERE PATIENTS AND STAFF HAVE 24 HOUR PRESENCE.
17. AREAS OF WORK WHICH ARE TYPICALLY UTILIZED BY PATIENTS MUST ONLY HAVE WORK OCCUR DURING OFF HOURS BETWEEN 6PM AND 6AM. ICRA BARRIERS AND WORK AREA MUST BE REMOVED AND CLEANED PRIOR TO 6AM.
18. CONTRACTOR MUST COORDINATE WITH FACILITY EMS AFTER USE OF FREIGHT ELEVATORS TO ENSURE PROPER SANITATION.

LIFE SAFETY REQUIREMENTS/BUILDING CODES

1. NATIONAL ELECTRIC CODE/NFPA 70 – CURRENT EDITION
2. ADA STANDARDS FOR ACCESSIBLE DESIGN – CURRENT EDITION
3. US DEPARTMENT OF VETERANS AFFAIRS HVAC DESIGN MANUAL – CURRENT EDITION INCLUDED REFERENCED CODES.
4. NFPA 101, LIFE SAFETY CODE AND VA FIRE PROTECTION DESIGN MANUAL. – CURRENT EDITION
5. THE CONTRACTOR IS SOLELY RESPONSIBLE FOR ALL SAFETY REGULATIONS, PROGRAMS AND PRECAUTIONS RELATED TO ALL WORK ON THIS PROJECT.
6. THE CONTRACTOR IS SOLELY RESPONSIBLE FOR ADHERENCE TO 29 CFR 1926, SAFETY AND HEALTH REGULATIONS FOR CONSTRUCTION INDUSTRY.
7. THE CONTRACTOR IS SOLELY RESPONSIBLE FOR ADHERENCE TO 29 CFR 1910, SAFETY AND HEALTH REGULATIONS FOR GENERAL INDUSTRY.
8. THE CONTRACTOR IS SOLELY RESPONSIBLE FOR ADHERENCE TO APPLICABLE PARTS OF MASTER CONSTRUCTION SPECIFICATION PG–18–1, SECTION 01 35 26, VA CONSTRUCTION SAFETY REQUIREMENTS.
9. MEANS AND METHODS OF CONSTRUCTION AND ADHERENCE SAFETY REGULATIONS ARE SOLELY THE CONTRACTOR'S RESPONSIBILITY.

APPENDIX A: ALTERNATIVE TO OUTDOOR EXHAUST REQUIREMENTS

This Appendix provides an equivalentICRA control measureto requirements detailed in thisVHA ICRA template(Table 5 Level III, item 5)that would allow interior construction space exhaust.

Interior Construction Space Exhaust:

If the facility is not able to exhaust to the building exterior, the Healthcare Environment and Facilities program office has identified an alternateindustry-recognizedstandard interior exhaust procedure that is accepted as providing an equivalent level of infection prevention and control(IPC), andsafety. The alternate interior exhaust procedure is implemented by completing the following:

a. If exhaust is directed indoors, then the system must be HEPA filtered. Prior to start of work, including assembly of the ICRA barriers, initial baseline air sampling measurements for particulate levels must be taken in the planned area of discharge.Once containment is erected and completed, HEPA filtration must then be verified by particulate measurement,using a particle counter with multi-channel capabilities to measure down to 0.3 microns,to confirm that the discharge of the HEPA unit does not exceed the baseline particulate count of the area to which the exhaust is directed. Verification must continue at least three times per day(once every 8 hours), 7 days per week, during the use of the negative air machine and HEPA filter. Any exceedance must trigger a work stoppage and an immediate response and resolution. All particulate measurements, including the baseline measurement, must be documented and retrievable.

b. To accommodate the sampling, the negative air pressure machine must be fitted with a 2 ft section of rigid ductwork at the discharge. The sample port for monitoring must be in the rigid ductwork section.

c. Vapor generating processes must be assessed and appropriate filtration must be installed to mitigate transmission to the facility.

d. Engineering must do a complete flow and pressure analysis and document the area to which the air is being discharged to ensure the flow and pressure relationships in that area are not being adversely impacted by the additional flow. Ideally, this is done as part of the construction package to ensure the design is implementable and no additional HVAC changes are required to accommodate the exhaust from the negative air equipment.

e. Install device on exterior of work containment to continually monitor negative pressurization. To ensure proper pressure is continuously maintained, the device(s) shall have a visual pressure indicator, data collection and alarm.

f. Exhaust must be directed to Low Risk areas as defined in Table 3in this VHA ICRA template. Ideally this discharge must be located so as not to impinge on high traffic areas or create a nuisance with noise or excessive airflow.
NOTE: Exhaust into shared or recirculating HVAC systems, or other shared exhaust systems (e.g., bathroom exhaust) is *not acceptable*.

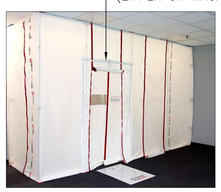

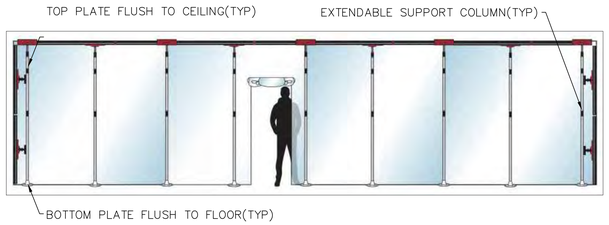

1 ICRA–02 TYPICAL ICRA WORK AREA PARTIAL ROOM BARRIER DETAIL
SCALE:NOT TO SCALE

2 ICRA–02 TYPICAL ICRA BARRIER FOR EXISTING DOORWAY
SCALE:NOT TO SCALE

3 ICRA–02 TYPICAL ICRA WORK AREA DOORWAY BARRIER DETAIL 2
SCALE:NOT TO SCALE

GENERAL NOTE

1. ALL ICRA BARRIERS USED BY CONTRACTOR MUST BE MAINTAINED AND EXAMINED DAILY TO ENSURE FULL FUNCTIONALITY IS ACHIEVED.

Revisions:	Date:

CONSULTANT

ARCHITECT/ENGINEER OF RECORD

NEI Northeast Infrastructure, LLC
34 BROWN STREET
HONESDALE, PA 18431
OFFICE : (570) 253-0846
WWW.NEINFRA.COM

STAMP

COMMONWEALTH OF PENNSYLVANIA REGISTERED PROFESSIONAL ENGINEER No. PE045114E

Office of Construction and Facilities Management

VA U.S. Department of Veterans Affairs

Drawing Title: ICRA NOTES & DETAILS	Phase: BID DOCUMENTS
Approved: Project Director: VA SIERRA PACIFIC NETWORK (VISN 21) VA NORTHERN CALIFORNIA HEALTHCARE SYSTEM	
Project Title: CORRECT MARTINEZ & MARE ISLAND GENERATOR FUEL LINES	Project Number: 612-23-005
	Building Number: N/A
Location: 150 MUIR ROAD MARTINEZ, CA 94553 / 201 WALNUT AVENUE MARE ISLAND, CA 94592	Drawing Number: ICRA-02
Issue Date: 04/17/2026	Checked: D.L.E. / Drawn: J.R.H.

6/14/2009 12:28:03 PM

File Path

VA FORM 08 - 6231

	ICRA CLASS I
	ICRA CLASS II
	ICRA CLASS III
	ICRA CLASS IV
- - - - - - - - - -	AREA OF WORK

GENERAL NOTES

I. FIRE STOPPING SHALL BE REPLACED WHENEVER PIPING OR RELATED NEW WORK PENETRATES A FIRE RATED WALL.

II. ICRA CLASSIFICATIONS REPRESENTED ON DRAWINGS ARE RECOMMENDED. ICRA CLASSIFICATIONS FOR ALL AREAS OF WORK SHALL BE COORDINATED AND VERIFIED WITH THE VA PROJECT COR AND ICRA PERSONNEL PRIOR TO THE START OF ANY WORK.

III. CONTRACTOR SHALL ENCAPSULATE ANY DEBRIS TO BE REMOVED FROM THE HOSPITAL PRIOR TO EXITING THE ENCLOSED ICRA AREA.

IV. ALL ICRA BARRIERS ARE FOR REFERENCE PURPOSES ONLY AND MUST BE FIELD VERIFIED TO NOT CAUSE UNREASONABLE OBSTRUCTION PRIOR TO ASSEMBLY. BARRIERS ARE TO BE CONSTRUCTED AND REMOVED IN ACCORDANCE WITH PROJECT PHASING PLANS.

V. CONTRACTOR SHALL ENSURE APPROVED ICRA PERMIT VERSION 1.3 IS OBTAINED PRIOR TO THE START OF ANY INTERIOR WORK.

N

1 ICRA–100

MARTINEZ BUILDING 19
ICRA CLASSIFICATION PLAN

SCALE: 1/8"=1'–0"

0 6 12 18 24 FT

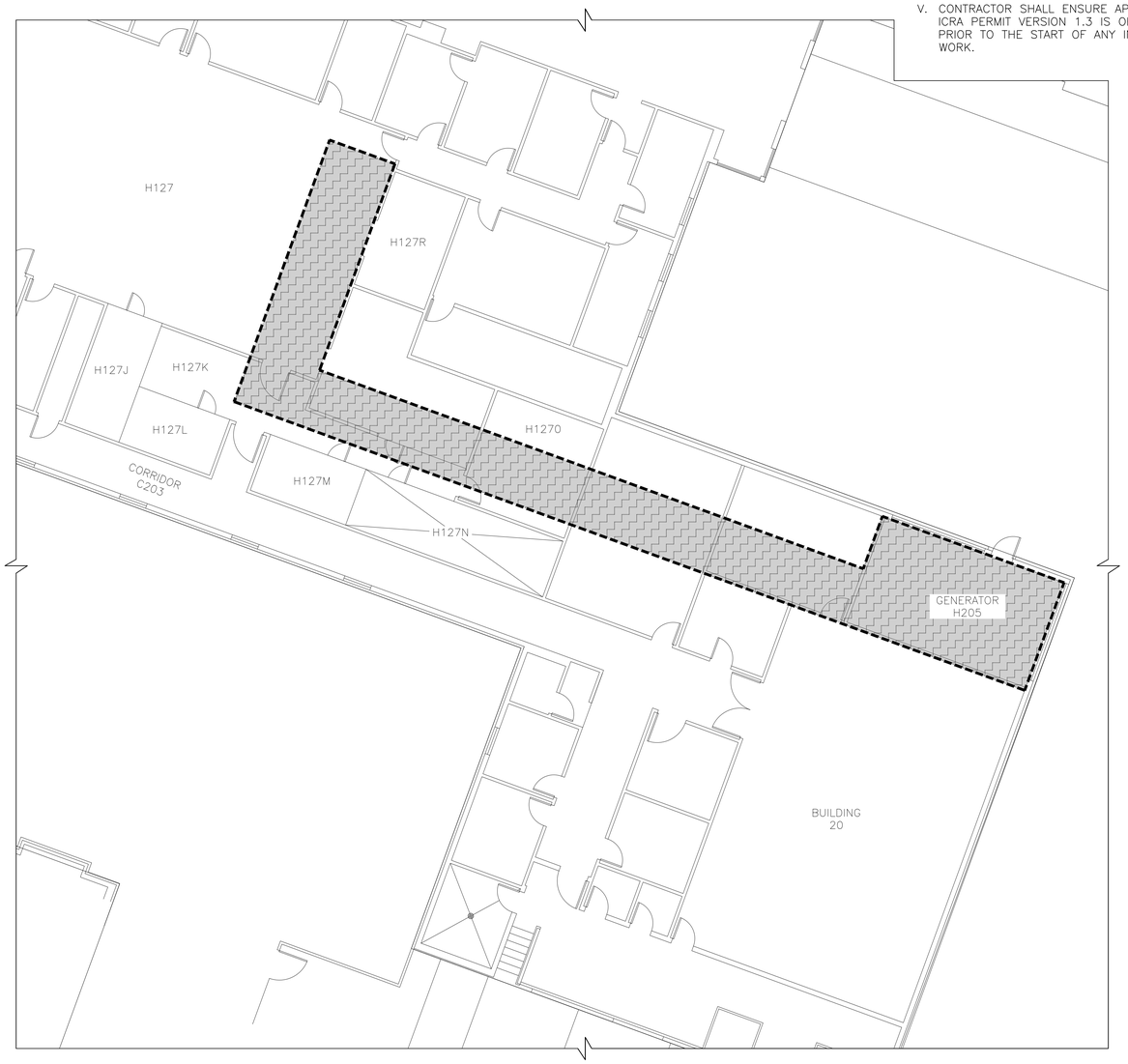

N

2 ICRA–100

MARTINEZ BUILDING 20
ICRA CLASSIFICATION PLAN

SCALE: 1/8"=1'–0"

0 6 12 18 24 FT

Revisions:	Date:

CONSULTANT

ARCHITECT/ENGINEER OF RECORD

NEI Northeast Infrastructure, LLC
34 BROWN STREET
HONESDALE, PA 18431
OFFICE : (570) 253-0846
WWW.NEINFRA.COM

STAMP

COMMONWEALTH OF PENNSYLVANIA REGISTERED PROFESSIONAL ENGINEER No. PE043114

Office of Construction and Facilities Management

VA U.S. Department of Veterans Affairs

Drawing Title: MARTINEZ BUILDING 19 & 20 ICRA CLASSIFICATION PLANS

Phase: BID DOCUMENTS

Project Title: CORRECT MARTINEZ & MARE ISLAND GENERATOR FUEL LINES

Project Number: 612-23-005

Building Number: 19 & 20

Approved: Project Director: VA SIERRA PACIFIC NETWORK (VISN 21) VA NORTHERN CALIFORNIA HEALTHCARE SYSTEM

Location: 150 MUIR ROAD MARTINEZ, CA 94553 — 201 WALNUT AVENUE MARE ISLAND, CA 94592

Issue Date: 04/17/2026

Checked: D.L.E.

Drawn: J.R.H.

Drawing Number: ICRA-100

6/14/2008 12:39:03 PM

File Path

VA FORM 08 - 6231

	ICRA CLASS I
	ICRA CLASS II
	ICRA CLASS III
	ICRA CLASS IV
- - - - - - - - - -	AREA OF WORK

GENERAL NOTES

I. FIRE STOPPING SHALL BE REPLACED WHENEVER PIPING OR RELATED NEW WORK PENETRATES A FIRE RATED WALL.

II. ICRA CLASSIFICATIONS REPRESENTED ON DRAWINGS ARE RECOMMENDED. ICRA CLASSIFICATIONS FOR ALL AREAS OF WORK SHALL BE COORDINATED AND VERIFIED WITH THE VA PROJECT COR AND ICRA PERSONNEL PRIOR TO THE START OF ANY WORK.

III. CONTRACTOR SHALL ENCAPSULATE ANY DEBRIS TO BE REMOVED FROM THE HOSPITAL PRIOR TO EXITING THE ENCLOSED ICRA AREA.

IV. ALL ICRA BARRIERS ARE FOR REFERENCE PURPOSES ONLY AND MUST BE FIELD VERIFIED TO NOT CAUSE UNREASONABLE OBSTRUCTION PRIOR TO ASSEMBLY. BARRIERS ARE TO BE CONSTRUCTED AND REMOVED IN ACCORDANCE WITH PROJECT PHASING PLANS.

V. CONTRACTOR SHALL ENSURE APPROVED ICRA PERMIT VERSION 1.3 IS OBTAINED PRIOR TO THE START OF ANY INTERIOR WORK.

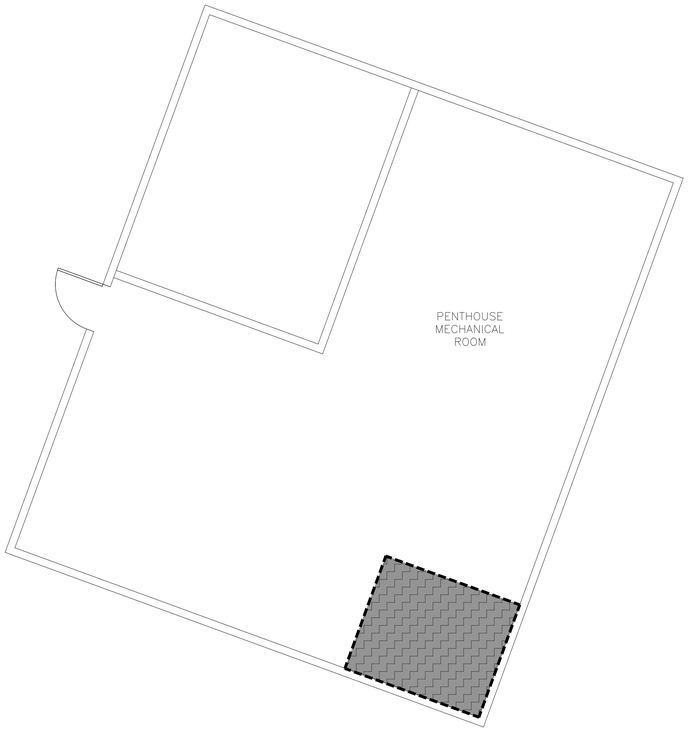

N

1
ICRA–101

MARTINEZ BUILDING 20 PENTHOUSE
ICRA CLASSIFICATION PLAN

SCALE: 1/4"=1'–0"

0 3 6 9 12 FT

6/14/2009 12:28:03 PM

File Path

VA FORM 08 - 6231

Revisions:	Date:

CONSULTANT

ARCHITECT/ENGINEER OF RECORD

NEI Northeast Infrastructure, LLC

34 BROWN STREET
HONESDALE, PA 18431

OFFICE : (570) 253-0846
WWW.NEINFRA.COM

STAMP

REGISTERED PROFESSIONAL ENGINEER No. PE045114E

Office of Construction and Facilities Management

VA U.S. Department of Veterans Affairs

Drawing Title: MARTINEZ BUILDING 20 PENTHOUSE ICRA CLASSIFICATION PLAN	Phase: BID DOCUMENTS	Project Title: CORRECT MARTINEZ & MARE ISLAND GENERATOR FUEL LINES	Project Number: 612-23-005
			Building Number: 20
Approved: Project Director: VA SIERRA PACIFIC NETWORK (VISN 21) VA NORTHERN CALIFORNIA HEALTHCARE SYSTEM		Location: 150 MUIR ROAD MARTINEZ, CA 94553 / 201 WALNUT AVENUE MARE ISLAND, CA 94592	Drawing Number: ICRA-101
		Issue Date: 04/17/2026 / Checked: D.L.E. / Drawn: E.G.W.	

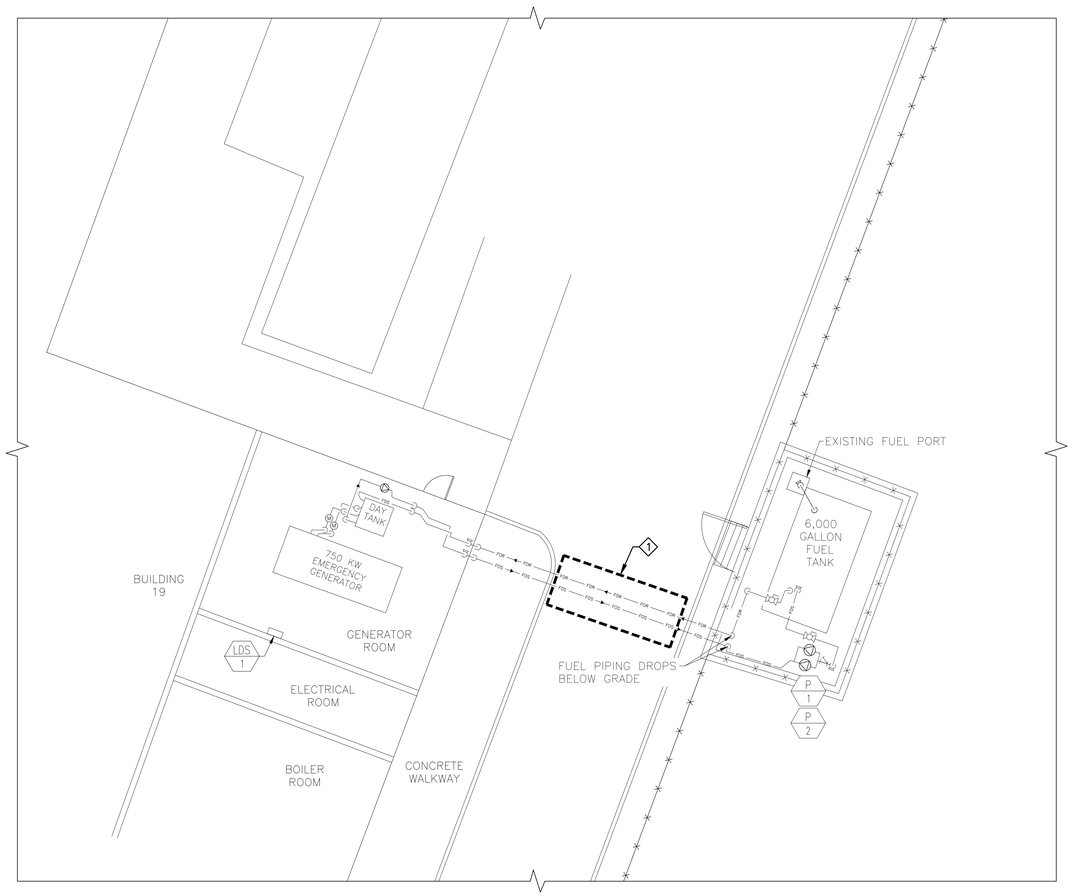

N

1 / GC-100

MARTINEZ BUILDING 19 PHASING PLAN

SCALE: 1/8"=1'-0"

0 6 12 18 24 FT

GENERAL PHASING NOTES

I. ANY MAJOR SERVICE DISRUPTIONS TO THE BUILDING MUST OCCUR DURING OFF HOURS ON WEEK DAYS FROM 5:00PM–7:00AM OR ON WEEKENDS. AT THE END OF EACH WORK DAY THE CONTRACTOR SHALL ENSURE A FULLY OPERATIONAL SYSTEM IS MAINTAINED.

II. CONTRACTOR SHALL UTILIZE EXISTING FUEL PIPING TO ENSURE FUEL SERVICE TO THE EMERGENCY GENERATOR IS MAINTAINED THROUGHOUT THE DURATION OF CONSTRUCTION.

III. CONTRACTOR MUST ENSURE SECTIONS OF EXISTING FUEL PIPING ARE DRAINED AND EXISTING FUEL IS CONTAINED AND DISPOSED OF PROPERLY PRIOR TO REMOVAL OF EXISTING FUEL PIPING AND CONNECTION OF REPLACEMENT FUEL PIPING.

IV. ALL WORK LOCATED WITHIN MECHANICAL ROOMS, UTILITY CLOSETS, AND STORAGE SPACES SHALL BE COMPLETED DURING WEEKDAYS BETWEEN 6:00AM AND 6:00PM.

V. ANY WORK COMPLETED DURING AFTER HOURS BETWEEN 5:00PM AND 7:00AM DURING WEEKDAYS OR DURING THE WEEKEND SHALL BE COORDINATED WITH VA POLICE DEPARTMENT AND VA COR.

PHASING ORDER OF OPERATIONS

PHASE 1:
THE CONTRACTOR SHALL INSTALL REPLACEMENT FUEL PIPING IN PARALLEL TO EXISTING FUEL PIPING IN ALL LOCATIONS WHERE EXISTING FUEL PIPING TRAVERSES ABOVE GRADE. CONTRACTOR SHALL INSTALL REPLACEMENT PUMPS AND ASSOCIATED CONTROLS DURING PHASE 1. REPLACEMENT PUMPS AND ASSOCIATED CONTROLS SHALL BE INSTALLED ADJACENT TO EXISTING. REPLACEMENT PUMPS SHALL NOT BE UTILIZED UNTIL PHASE 3.

PHASE 2:
CONTRACTOR SHALL INSTALL REPLACEMENT FUEL OIL PIPING IN PARALLEL TO EXISTING FUEL OIL PIPING IN ALL LOCATIONS WHERE EXISTING FUEL OIL PIPING TRAVERSES BELOW GRADE. CONTRACTOR SHALL INSTALL REPLACEMENT LEAK DETECTION EQUIPMENT IN THIS PHASE.

PHASE 3:
AFTER THE REPLACEMENT FUEL OIL SYSTEM IS IN PLACE AND TESTED, THE CONTRACTOR SHALL CONNECT THE EMERGENCY GENERATOR TO THE INSTALLED REPLACEMENT FUEL OIL SYSTEM DURING THE OFF HOURS. THE SYSTEM SHUTDOWN UTILIZED TO SWITCH FROM THE EXISTING FUEL PIPING SYSTEM TO THE REPLACEMENT MUST BE COMPLETED WITHIN A SINGLE 8 HOUR SHIFT. UPON COMPLETION OF SUCCESSFUL TRANSITION TO THE REPLACEMENT FUEL OIL PIPING SYSTEM, THE CONTRACTOR SHALL DEMOLISH ALL REMAINING EXISTING FUEL OIL PIPING.

KEYED PHASING NOTE

1. ACCESS TO ROADWAY MUST BE MAINTAINED. CONTRACTOR SHALL PROVIDE A SINGLE LANE FOR VEHICULAR TRAFFIC. ONE LANE IS PERMITTED TO BE SHUT DOWN AT A TIME DURING DEMOLITION AND INSTALLATION OF REPLACEMENT FUEL PIPING.

Revisions:	Date:

CONSULTANT

ARCHITECT/ENGINEER OF RECORD

NEI Northeast Infrastructure, LLC
34 BROWN STREET
HONESDALE, PA 18431
OFFICE : (570) 253-0846
WWW.NEINFRA.COM

STAMP

COMMONWEALTH OF PENNSYLVANIA REGISTERED PROFESSIONAL ENGINEER No. PE045114E

Office of Construction and Facilities Management

VA U.S. Department of Veterans Affairs

Drawing Title: MARTINEZ BUILDING 19 PHASING PLAN	Phase: BID DOCUMENTS	Project Title: CORRECT MARTINEZ & MARE ISLAND GENERATOR FUEL LINES	Project Number: 612-23-005
Approved: Project Director: VA SIERRA PACIFIC NETWORK (VISN 21) VA NORTHERN CALIFORNIA HEALTHCARE SYSTEM		Location: 150 MUIR ROAD MARTINEZ, CA 94553 / 201 WALNUT AVENUE MARE ISLAND, CA 94592	Building Number: 19
		Issue Date: 04/17/2026	Checked: D.L.E. / Drawn: J.R.H.
			Drawing Number: GC-100

6/14/2009 12:39:03 PM

File Path

VA FORM 08 - 6231

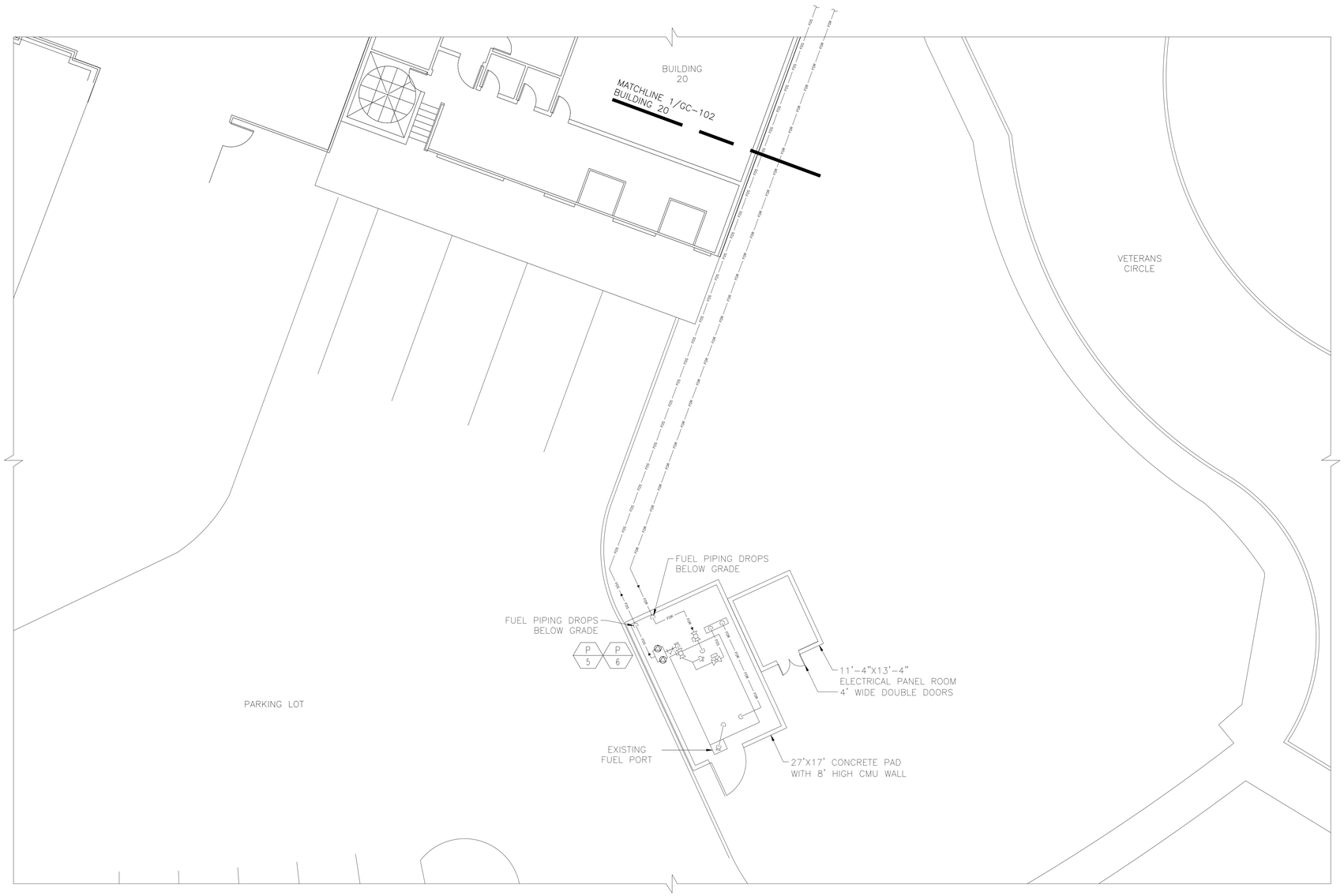

N

1
GC-101

MARTINEZ BUILDING 20 PHASING PLAN 1

SCALE: 1/8"=1'-0"

0 6 12 18 24 FT

GENERAL PHASING NOTES

I. ANY MAJOR SERVICE DISRUPTIONS TO THE BUILDING MUST OCCUR DURING OFF HOURS ON WEEK DAYS FROM 5:00PM–7:00AM OR ON WEEKENDS. AT THE END OF EACH WORK DAY THE CONTRACTOR SHALL ENSURE A FULLY OPERATIONAL SYSTEM IS MAINTAINED.

II. CONTRACTOR SHALL UTILIZE EXISTING FUEL PIPING TO ENSURE FUEL SERVICE TO THE EMERGENCY GENERATOR IS MAINTAINED THROUGHOUT THE DURATION OF CONSTRUCTION.

III. CONTRACTOR MUST ENSURE SECTIONS OF EXISTING FUEL PIPING ARE DRAINED AND EXISTING FUEL IS CONTAINED AND DISPOSED OF PROPERLY PRIOR TO REMOVAL OF EXISTING FUEL PIPING AND CONNECTION OF REPLACEMENT FUEL PIPING.

IV. ALL WORK LOCATED WITHIN MECHANICAL ROOMS, UTILITY CLOSETS, AND STORAGE SPACES SHALL BE COMPLETED DURING WEEKDAYS BETWEEN 6:00AM AND 6:00PM.

V. ANY WORK COMPLETED DURING AFTER HOURS BETWEEN 5:00PM AND 7:00AM DURING WEEKDAYS OR DURING THE WEEKEND SHALL BE COORDINATED WITH VA POLICE DEPARTMENT AND VA COR.

PHASING ORDER OF OPERATIONS

PHASE 1:
THE CONTRACTOR SHALL INSTALL REPLACEMENT FUEL PIPING IN PARALLEL TO EXISTING FUEL PIPING IN ALL LOCATIONS WHERE EXISTING FUEL PIPING TRAVERSES ABOVE GRADE. CONTRACTOR SHALL INSTALL REPLACEMENT PUMPS AND ASSOCIATED CONTROLS DURING PHASE 1. REPLACEMENT PUMPS AND ASSOCIATED CONTROLS SHALL BE INSTALLED ADJACENT TO EXISTING. REPLACEMENT PUMPS SHALL NOT BE UTILIZED UNTIL PHASE 3.

PHASE 2:
CONTRACTOR SHALL INSTALL REPLACEMENT FUEL OIL PIPING IN PARALLEL TO EXISTING FUEL OIL PIPING IN ALL LOCATIONS WHERE EXISTING FUEL OIL PIPING TRAVERSES BELOW GRADE. CONTRACTOR SHALL INSTALL REPLACEMENT LEAK DETECTION EQUIPMENT IN THIS PHASE.

PHASE 3:
AFTER THE REPLACEMENT FUEL OIL SYSTEM IS IN PLACE AND TESTED, THE CONTRACTOR SHALL CONNECT THE EMERGENCY GENERATOR TO THE INSTALLED REPLACEMENT FUEL OIL SYSTEM DURING THE OFF HOURS. THE SYSTEM SHUTDOWN UTILIZED TO SWITCH FROM THE EXISTING FUEL PIPING SYSTEM TO THE REPLACEMENT MUST BE COMPLETED WITHIN A SINGLE 8 HOUR SHIFT. UPON COMPLETION OF SUCCESSFUL TRANSITION TO THE REPLACEMENT FUEL OIL PIPING SYSTEM, THE CONTRACTOR SHALL DEMOLISH ALL REMAINING EXISTING FUEL OIL PIPING.

Revisions:	Date:

CONSULTANT

ARCHITECT/ENGINEER OF RECORD

NEI Northeast Infrastructure, LLC
34 BROWN STREET
HONESDALE, PA 18431
OFFICE : (570) 253-0846
WWW.NEINFRA.COM

STAMP

REGISTERED PROFESSIONAL ENGINEER
No. PE045114E

Office of Construction and Facilities Management

VA U.S. Department of Veterans Affairs

Drawing Title: MARTINEZ BUILDING 20 PHASING PLAN 1	Phase: BID DOCUMENTS
Approved: Project Director: VA SIERRA PACIFIC NETWORK (VISN 21) VA NORTHERN CALIFORNIA HEALTHCARE SYSTEM	
Project Title: CORRECT MARTINEZ & MARE ISLAND GENERATOR FUEL LINES	Project Number: 612-23-005
	Building Number: 20
Location: 150 MUIR ROAD MARTINEZ, CA 94553 / 201 WALNUT AVENUE MARE ISLAND, CA 94592	Drawing Number: GC-101
Issue Date: 04/17/2026	Checked: D.L.E. / Drawn: J.R.H.

6/14/2009 12:39:03 PM

File Path

VA FORM 08 - 6231

N

1 GC-102

MARTINEZ BUILDING 20 PHASING PLAN 2

SCALE: 1/8"=1'-0"

0 6 12 18 24 FT

GENERAL PHASING NOTES

I. ANY MAJOR SERVICE DISRUPTIONS TO THE BUILDING MUST OCCUR DURING OFF HOURS ON WEEK DAYS FROM 5:00PM–7:00AM OR ON WEEKENDS. AT THE END OF EACH WORK DAY THE CONTRACTOR SHALL ENSURE A FULLY OPERATIONAL SYSTEM IS MAINTAINED.

II. CONTRACTOR SHALL UTILIZE EXISTING FUEL PIPING TO ENSURE FUEL SERVICE TO THE EMERGENCY GENERATOR IS MAINTAINED THROUGHOUT THE DURATION OF CONSTRUCTION.

III. CONTRACTOR MUST ENSURE SECTIONS OF EXISTING FUEL PIPING ARE DRAINED AND EXISTING FUEL IS CONTAINED AND DISPOSED OF PROPERLY PRIOR TO REMOVAL OF EXISTING FUEL PIPING AND CONNECTION OF REPLACEMENT FUEL PIPING.

IV. ALL WORK LOCATED WITHIN MECHANICAL ROOMS, UTILITY CLOSETS, AND STORAGE SPACES SHALL BE COMPLETED DURING WEEKDAYS BETWEEN 6:00AM AND 6:00PM.

V. ANY WORK COMPLETED DURING AFTER HOURS BETWEEN 5:00PM AND 7:00AM DURING WEEKDAYS OR DURING THE WEEKEND SHALL BE COORDINATED WITH VA POLICE DEPARTMENT AND VA COR.

PHASING ORDER OF OPERATIONS

PHASE 1:
THE CONTRACTOR SHALL INSTALL REPLACEMENT FUEL PIPING IN PARALLEL TO EXISTING FUEL PIPING IN ALL LOCATIONS WHERE EXISTING FUEL PIPING TRAVERSES ABOVE GRADE. CONTRACTOR SHALL INSTALL REPLACEMENT PUMPS AND ASSOCIATED CONTROLS DURING PHASE 1. REPLACEMENT PUMPS AND ASSOCIATED CONTROLS SHALL BE INSTALLED ADJACENT TO EXISTING. REPLACEMENT PUMPS SHALL NOT BE UTILIZED UNTIL PHASE 3.

PHASE 2:
CONTRACTOR SHALL INSTALL REPLACEMENT FUEL OIL PIPING IN PARALLEL TO EXISTING FUEL OIL PIPING IN ALL LOCATIONS WHERE EXISTING FUEL OIL PIPING TRAVERSES BELOW GRADE. CONTRACTOR SHALL INSTALL REPLACEMENT LEAK DETECTION EQUIPMENT IN THIS PHASE.

PHASE 3:
AFTER THE REPLACEMENT FUEL OIL SYSTEM IS IN PLACE AND TESTED, THE CONTRACTOR SHALL CONNECT THE EMERGENCY GENERATOR TO THE INSTALLED REPLACEMENT FUEL OIL SYSTEM DURING THE OFF HOURS. THE SYSTEM SHUTDOWN UTILIZED TO SWITCH FROM THE EXISTING FUEL PIPING SYSTEM TO THE REPLACEMENT MUST BE COMPLETED WITHIN A SINGLE 8 HOUR SHIFT. UPON COMPLETION OF SUCCESSFUL TRANSITION TO THE REPLACEMENT FUEL OIL PIPING SYSTEM, THE CONTRACTOR SHALL DEMOLISH ALL REMAINING EXISTING FUEL OIL PIPING.

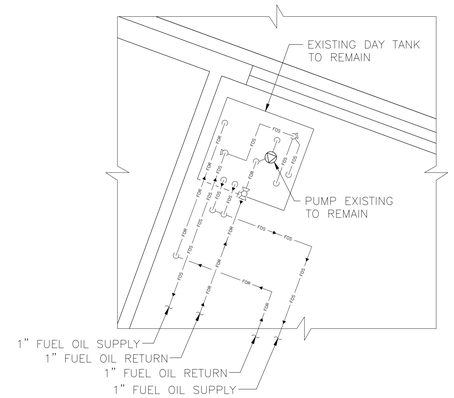

N

2 GC-102

MARTINEZ BUILDING 20 ENLARGED PHASING PLAN

SCALE: 1/2"=1'-0"

0 2 4 6 FT

Revisions:	Date:

CONSULTANT

ARCHITECT/ENGINEER OF RECORD

NEI Northeast Infrastructure, LLC
34 BROWN STREET
HONESDALE, PA 18431
OFFICE : (570) 253-0846
WWW.NEINFRA.COM

STAMP

Office of Construction and Facilities Management

VA U.S. Department of Veterans Affairs

Drawing Title: MARTINEZ BUILDING 20 PHASING PLANS 2	Phase: BID DOCUMENTS
Approved: Project Director: VA SIERRA PACIFIC NETWORK (VISN 21) VA NORTHERN CALIFORNIA HEALTHCARE SYSTEM	
Project Title: CORRECT MARTINEZ & MARE ISLAND GENERATOR FUEL LINES	Project Number: 612-23-005
	Building Number: 20
Location: 150 MUIR ROAD MARTINEZ, CA 94553 — 201 WALNUT AVENUE MARE ISLAND, CA 94592	Drawing Number: GC-102
Issue Date: 04/17/2026	Checked: D.L.E. — Drawn: J.R.H.

File Path: 6/14/2009 12:39:03 PM

VA FORM 08 - 6231

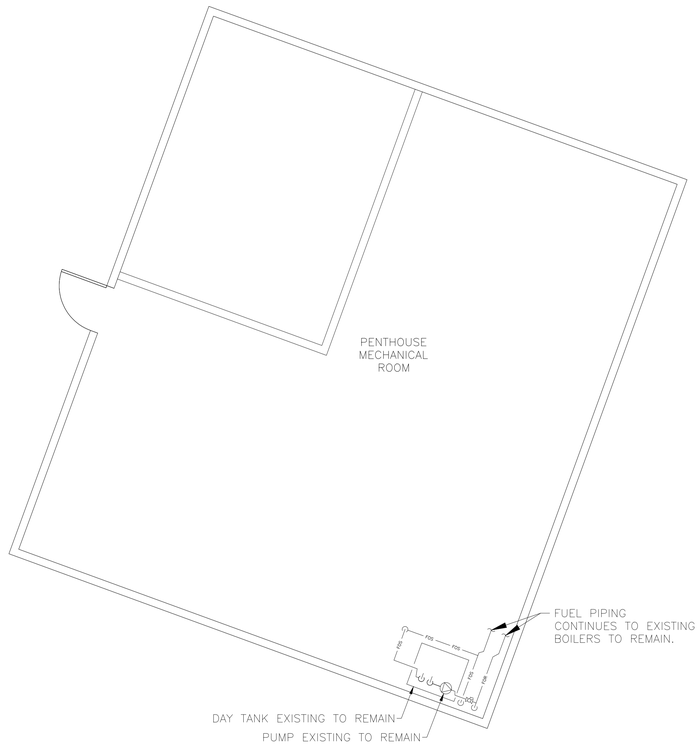

N

1
GC-103

MARTINEZ BUILDING 20
PENTHOUSE PHASING PLAN

SCALE: 1/4"=1'-0"

0 3 6 9 12 FT

GENERAL PHASING NOTES

I. ANY MAJOR SERVICE DISRUPTIONS TO THE BUILDING MUST OCCUR DURING OFF HOURS ON WEEK DAYS FROM 5:00PM–7:00AM OR ON WEEKENDS. AT THE END OF EACH WORK DAY THE CONTRACTOR SHALL ENSURE A FULLY OPERATIONAL SYSTEM IS MAINTAINED.

II. CONTRACTOR SHALL UTILIZE EXISTING FUEL PIPING TO ENSURE FUEL SERVICE TO THE EMERGENCY GENERATOR IS MAINTAINED THROUGHOUT THE DURATION OF CONSTRUCTION.

III. CONTRACTOR MUST ENSURE SECTIONS OF EXISTING FUEL PIPING ARE DRAINED AND EXISTING FUEL IS CONTAINED AND DISPOSED OF PROPERLY PRIOR TO REMOVAL OF EXISTING FUEL PIPING AND CONNECTION OF REPLACEMENT FUEL PIPING.

IV. ALL WORK LOCATED WITHIN MECHANICAL ROOMS, UTILITY CLOSETS, AND STORAGE SPACES SHALL BE COMPLETED DURING WEEKDAYS BETWEEN 6:00AM AND 6:00PM.

V. ANY WORK COMPLETED DURING AFTER HOURS BETWEEN 5:00PM AND 7:00AM DURING WEEKDAYS OR DURING THE WEEKEND SHALL BE COORDINATED WITH VA POLICE DEPARTMENT AND VA COR.

PHASING ORDER OF OPERATIONS

PHASE 1:
THE CONTRACTOR SHALL INSTALL REPLACEMENT FUEL PIPING IN PARALLEL TO EXISTING FUEL PIPING IN ALL LOCATIONS WHERE EXISTING FUEL PIPING TRAVERSES ABOVE GRADE. CONTRACTOR SHALL INSTALL REPLACEMENT PUMPS AND ASSOCIATED CONTROLS DURING PHASE 1. REPLACEMENT PUMPS AND ASSOCIATED CONTROLS SHALL BE INSTALLED ADJACENT TO EXISTING. REPLACEMENT PUMPS SHALL NOT BE UTILIZED UNTIL PHASE 3.

PHASE 2:
CONTRACTOR SHALL INSTALL REPLACEMENT FUEL OIL PIPING IN PARALLEL TO EXISTING FUEL OIL PIPING IN ALL LOCATIONS WHERE EXISTING FUEL OIL PIPING TRAVERSES BELOW GRADE. CONTRACTOR SHALL INSTALL REPLACEMENT LEAK DETECTION EQUIPMENT IN THIS PHASE.

PHASE 3:
AFTER THE REPLACEMENT FUEL OIL SYSTEM IS IN PLACE AND TESTED, THE CONTRACTOR SHALL CONNECT THE EMERGENCY GENERATOR TO THE INSTALLED REPLACEMENT FUEL OIL SYSTEM DURING THE OFF HOURS. THE SYSTEM SHUTDOWN UTILIZED TO SWITCH FROM THE EXISTING FUEL PIPING SYSTEM TO THE REPLACEMENT MUST BE COMPLETED WITHIN A SINGLE 8 HOUR SHIFT. UPON COMPLETION OF SUCCESSFUL TRANSITION TO THE REPLACEMENT FUEL OIL PIPING SYSTEM, THE CONTRACTOR SHALL DEMOLISH ALL REMAINING EXISTING FUEL OIL PIPING.

Revisions:	Date:

CONSULTANT

ARCHITECT/ENGINEER OF RECORD

NEI Northeast Infrastructure, LLC
34 BROWN STREET
HONESDALE, PA 18431
OFFICE : (570) 253-0846
WWW.NEINFRA.COM

STAMP

COMMONWEALTH OF PENNSYLVANIA REGISTERED PROFESSIONAL ENGINEER No. PE045114E

Office of Construction and Facilities Management

VA U.S. Department of Veterans Affairs

Drawing Title: MARTINEZ BUILDING 20 PENTHOUSE PHASING PLAN	Phase: BID DOCUMENTS	Project Title: CORRECT MARTINEZ & MARE ISLAND GENERATOR FUEL LINES	Project Number: 612-23-005
Approved: Project Director: VA SIERRA PACIFIC NETWORK (VISN 21) VA NORTHERN CALIFORNIA HEALTHCARE SYSTEM		Location: 150 MUIR ROAD MARTINEZ, CA 94553 / 201 WALNUT AVENUE MARE ISLAND, CA 94592	Building Number: 20
		Issue Date: 04/17/2026	Checked: D.L.E. / Drawn: J.R.H.
			Drawing Number: GC-103

6/14/2009 12:28:03 PM

File Path

VA FORM 08 - 6231

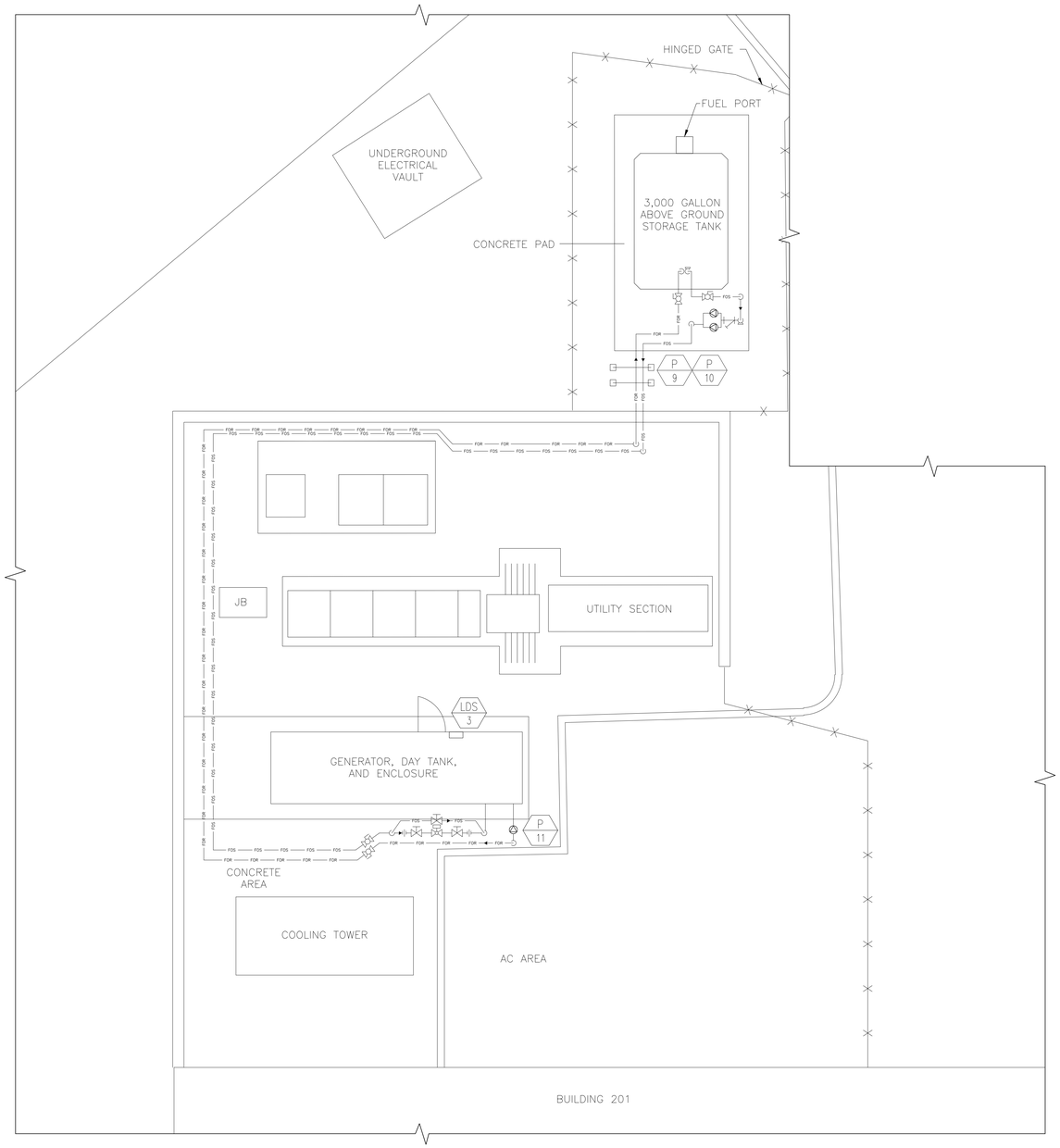

N

1 GC-104

MARE ISLAND PHASING PLAN

SCALE: 1/4"=1'-0"

0 3 6 9 12 FT

GENERAL PHASING NOTES

I. ANY MAJOR SERVICE DISRUPTIONS TO THE BUILDING MUST OCCUR DURING OFF HOURS ON WEEK DAYS FROM 5:00PM–7:00AM OR ON WEEKENDS. AT THE END OF EACH WORK DAY THE CONTRACTOR SHALL ENSURE A FULLY OPERATIONAL SYSTEM IS MAINTAINED.

II. ALL FUEL OIL PIPING AT THIS LOCATION IS LOCATED ABOVE GRADE.

III. ALL WORK LOCATED WITHIN MECHANICAL ROOMS, UTILITY CLOSETS, AND STORAGE SPACES SHALL BE COMPLETED DURING WEEKDAYS BETWEEN 6:00AM AND 6:00PM.

IV. ANY WORK COMPLETED DURING AFTER HOURS BETWEEN 5:00PM AND 7:00AM DURING WEEKDAYS OR DURING THE WEEKEND SHALL BE COORDINATED WITH VA POLICE DEPARTMENT AND VA COR.

PHASING ORDER OF OPERATIONS

PHASE 1:
THE CONTRACTOR SHALL INSTALL REPLACEMENT FUEL PIPING IN PARALLEL TO EXISTING FUEL PIPING IN ALL LOCATIONS WHERE EXISTING FUEL PIPING TRAVERSES ABOVE GRADE. CONTRACTOR SHALL INSTALL REPLACEMENT PUMPS AND ASSOCIATED CONTROLS DURING PHASE 1. REPLACEMENT CONTROLS SHALL BE INSTALLED ADJACENT TO EXISTING. REPLACEMENT PUMPS SHALL NOT BE INSTALLED AND UTILIZED UNTIL PHASE 3.

PHASE 2:
CONTRACTOR SHALL INSTALL REPLACEMENT FUEL OIL PIPING IN PARALLEL TO EXISTING FUEL OIL PIPING IN ALL LOCATIONS WHERE EXISTING FUEL OIL PIPING TRAVERSES BELOW GRADE. CONTRACTOR SHALL INSTALL REPLACEMENT LEAK DETECTION EQUIPMENT IN THIS PHASE.

PHASE 3:
AFTER THE REPLACEMENT FUEL OIL PIPING IS IN PLACE AND TESTED, THE CONTRACTOR SHALL REPLACE THE FUEL PUMPS AND CONNECT THE EMERGENCY GENERATOR TO THE INSTALLED REPLACEMENT FUEL OIL SYSTEM DURING THE WEEKEND WHILE THE VA IS NOT OPEN. THE SYSTEM SHUTDOWN UTILIZED TO SWITCH FROM THE EXISTING FUEL PIPING SYSTEM TO THE REPLACEMENT MUST BE COMPLETED WITHIN A SINGLE 8 HOUR SHIFT. UPON COMPLETION OF SUCCESSFUL TRANSITION TO THE REPLACEMENT FUEL OIL PIPING SYSTEM, THE CONTRACTOR SHALL DEMOLISH ALL REMAINING EXISTING FUEL OIL PIPING.

Revisions:	Date:

CONSULTANT

ARCHITECT/ENGINEER OF RECORD

NEI Northeast Infrastructure, LLC
34 BROWN STREET
HONESDALE, PA 18431
OFFICE : (570) 253-0846
WWW.NEINFRA.COM

STAMP

COMMONWEALTH OF PENNSYLVANIA REGISTERED PROFESSIONAL ENGINEER No. PE045114E

Office of Construction and Facilities Management

VA U.S. Department of Veterans Affairs

Drawing Title: MARE ISLAND PHASING PLAN	Phase: BID DOCUMENTS
Approved: Project Director: VA SIERRA PACIFIC NETWORK (VISN 21) VA NORTHERN CALIFORNIA HEALTHCARE SYSTEM	

Project Title: CORRECT MARTINEZ & MARE ISLAND GENERATOR FUEL LINES			Project Number: 612-23-005
			Building Number: 201
Location: 150 MUIR ROAD, MARTINEZ, CA 94553 / 201 WALNUT AVENUE, MARE ISLAND, CA 94592			Drawing Number: GC-104
Issue Date: 04/17/2026	Checked: D.L.E.	Drawn: J.R.H.	

6/14/2009 12:39:03 PM

File Path:

VA FORM 08 - 6231

GENERAL MECHANICAL PIPING NOTES

1. PROVIDE ALL MATERIALS AND EQUIPMENT AND PERFORM ALL LABOR REQUIRED TO INSTALL COMPLETE AND OPERABLE MECHANICAL PIPING SYSTEM AS INDICATED ON THE DRAWINGS, AS SPECIFIED, AND AS REQUIRED BY CODE.

2. THE DRAWINGS ARE GENERALLY DIAGRAMMATIC AND INDICATIVE OF WORK TO BE PERFORMED. THE DRAWINGS ARE NOT INTENDED TO SHOW EVERY PIPE, FITTING, VALVE OR APPURTENANCE REQUIRED FOR A COMPLETE INSTALLATION. DO NOT SCALE LOCATION DIMENSIONS FROM THESE DRAWINGS. DRAWINGS ARE NOT TO BE SCALED FOR THE ACCURATE CUTTING OF PIPE OR ITS EXACT LOCATION. BEFORE ANY PIPING IS INSTALLED, CONFER WITH ALL OTHER CONTRACTORS IN ORDER TO ESTABLISH THE LOCATION OF THEIR PIPING, CONDUIT, DUCTWORK, GRILLES, FOUNDATIONS, STRUCTURAL STEEL, LIGHTING FIXTURES AND OTHER EQUIPMENT SO AS TO AVOID INTERFERENCE. FAILURE TO COORDINATE SHALL NOT RESULT IN ANY ADDITIONAL EXPENSE TO THE OWNER.

3. THE CONTRACTOR IS RESPONSIBLE FOR CHECKING AND VERIFYING ALL CONDITIONS AND DIMENSIONS AND FOR COORDINATION OF THEIR WORK WITH THAT OF ALL OTHER TRADES. PERFORM WORK IN A NEAT, ORDERLY MANNER AND WITH THE LEAST POSSIBLE INTERFERENCES.

4. CONTRACTOR SHALL PROTECT THE MECHANICAL PIPING FROM STRESS AND STRAIN.

5. ALL MATERIALS, EQUIPMENT AND DEVICES SHALL, AS A MINIMUM, MEET THE REQUIREMENTS OF UL WHERE UL REQUIREMENTS ARE ESTABLISHED FOR THOSE ITEMS. ALL ITEMS SHALL BE CLASSIFIED BY UL AS SUITABLE FOR THE PURPOSE OF THE CODE.

6. WHERE PIPES PENETRATE FIRE RATED OR SMOKE RATED BARRIERS (WALLS, FLOORS AND CEILINGS), SEAL PENETRATIONS IN ACCORDANCE WITH NFPA 90A WITH UL LISTED FIRE STOPPING SYSTEM. UTILIZE HILTI FIRESTOPPING PRODUCTS PER VA REQUIREMENTS.

7. ALL FACTORY APPLIED COATINGS AND FINISHES SHALL BE PROVIDED WITHOUT RUST, SCRATCHES OR DENTS.

8. PROVIDE VA COR WITH CERTIFICATES OF FINAL INSPECTION AND ACCEPTANCE.

9. EQUIPMENT INSTALLED WITHIN WORK AREAS MUST BE INSTALLED PER MANUFACTURER'S RECOMMENDED INSTALLATION INSTRUCTIONS, SPECIFICATIONS, AND VA HANDBOOK H-18-8 SEISMIC DESIGN REQUIREMENTS. CONTRACTOR SHALL PROVIDE STAMPED AND SEALED SHOP DRAWINGS FROM A PROFESSIONAL ENGINEER. REFER TO SPECIFICATION 13 05 41.

COORDINATION REQUIREMENT

1. COORDINATE LOCATIONS AND INSTALLATION OF MECHANICAL PIPING WORK TO AVOID CONFLICTS AND INTERFERENCES. MODIFICATIONS DUE TO FIELD CONDITIONS SHALL BE COMPLETELY RESOLVED BY CONTRACTOR IN ACCORDANCE WITH RECOMMENDATIONS OF THE VA.

MECHANICAL PIPING GENERAL DEMOLITION NOTES

1. REMOVE ALL EQUIPMENT, PIPING, INSULATION, HANGERS, CONTROLS, PADS, AND SUPPORTS UNLESS OTHERWISE INDICATED TO REMAIN. PIPING REMOVED FROM THE EXISTING MECHANICAL PIPING SYSTEM SHALL NOT BE USED IN THE INSTALLATION OF THE NEW SYSTEM.

2. DEMOLITION INCLUDES, BUT IS NOT LIMITED TO, REMOVAL AND LEGAL DISPOSAL OF EQUIPMENT AND SYSTEMS MADE OBSOLETE AND/OR REPLACED BY NEW WORK. DEMOLITION INCLUDES RELOCATION OR REINSTALLATION, DISCONNECTIONS AND RECONNECTIONS OF SERVICES, SUPPORTS, AND SUBSEQUENT FINAL SUPPORTS, TEMPORARY CAPPING, AND REROUTING OF TEMPORARY SERVICES TO PERMIT NEW OR RENOVATION WORK TO PROCEED.

3. THE DEMOLITION WORK INDICATED ON THE DRAWING IS INTENDED TO ASSIST THE CONTRACTOR AND GIVE GENERAL INFORMATION. NOT ALL DEMOLITION OR TEMPORARY CONNECTIONS ARE SHOWN. PRIOR TO SUBMITTING BID, THE CONTRACTOR SHALL VISIT THE PROJECT SITE AND REVIEW EXISTING CONDITIONS. PRIME CONTRACTOR IS RESPONSIBLE TO DETERMINE THE FULL EXTENT OF DEMOLITION, FOR ALL TRADES, AND INCLUDE ALL REQUIRED DEMOLITION WORK, FOR ALL TRADES, IN HIS BID, WHETHER OR NOT SPECIFICALLY SHOWN ON DRAWINGS. NO ADDITIONAL COST WILL BE GRANTED FOR DEMOLITION. LEGALLY DISPOSE OF ALL ITEMS AND MATERIALS, EXCEPT ANY ITEMS SPECIFICALLY DESIGNATED BY THE VA TO BE SALVAGED. REMOVE AND PLACE THE DESIGNATED SALVAGED EQUIPMENT IN A LOCATION DIRECTED BY THE VA AT NO ADDITIONAL EXPENSE.

4. CONTRACTOR IS RESPONSIBLE FOR CUTTING AND PATCHING. THE CONTRACTOR SHALL CUT AND PATCH THE EXISTING WALLS AND TO MATCH EXISTING. CONTRACTOR SHALL REMOVE/REPLACE EXISTING CEILING TILES AND GRID AS REQUIRED TO ACCOMPLISH INDICATED MECHANICAL PIPING WORK, UNLESS SPECIFICALLY INDICATED OTHERWISE.

5. CONTRACTOR SHALL COORDINATE ALL DEMOLITION AND NEW WORK WITH THE PHASING AS OUTLINED IN DRAWINGS AND SPECIFICATIONS. THE CONTRACTOR SHALL PROVIDE LABOR AND MATERIALS AS REQUIRED TO MAINTAIN CONTINUED OPERATION OF THE MECHANICAL PIPING SYSTEM THROUGH THE PHASES OF WORK AS INDICATED IN THE CONTRACT DOCUMENTS.

6. BEFORE COMMENCING ANY DEMOLITION ACTIVITIES, CONTRACTOR SHALL THOROUGHLY INVESTIGATE THE SITE, THE PIPING/EQUIPMENT AND SYSTEM BEING DEMOLISHED, AND ALL OTHER SYSTEMS AND EQUIPMENT TO REMAIN IN OPERATION. CONTRACTOR SHALL ENSURE THAT NO SYSTEM NOR ELEMENT THEREOF IS DAMAGED, SHUTDOWN, OR OTHERWISE ADVERSELY AFFECTED BY THE DEMOLITION ACTIVITIES. CONTRACTOR SHALL NOT CUT ANY LIVE PIPE. SHOULD A LIVE PIPE BE CUT, THE CONTRACTOR SHALL BE SOLELY RESPONSIBLE FOR ALL CLEAN-UP, REPAIRS, RESTORATION, EQUIPMENT REPLACEMENT, AND ANY/ALL COSTS ASSOCIATED WITH THE CUTTING OF THE LIVE PIPE.

GENERAL MECHANICAL PIPING WORK SCHEDULING/PHASING NOTES

1. ALL MEANS OF EGRESS SHALL BE MAINTAINED AND ACCESSIBLE. ICRA BARRIERS (IF REQUIRED), SHALL BE ERECTED AND TAKEN DOWN AS REQUIRED TO MEET THE VA SCHEDULING REQUIREMENTS.

2. ALL WORK REQUIRED WITHIN CORRIDORS SHALL BE PERFORMED TO MAINTAIN ACCESSIBILITY THROUGH THE MEANS OF EGRESS IN ACCORDANCE WITH THE CONTRACT DOCUMENTS AND VA CONSTRUCTION POLICY AND PERFORMED OVERNIGHT AS DIRECTED BY VA.

3. ACCESS PANELS TO BE ADDED AS NECESSARY FOR AREAS OF WORK ABOVE HARD CEILINGS.

4. IN THE CASE THE WORD PROVIDE IS USED THE CONTRACTOR SHALL BE RESPONSIBLE FOR FURNISHING AND INSTALLING THE REFERENCED EQUIPMENT, ALONG WITH ALL PIPING, VALVES, AND REQUIRED ASSOCIATED APPURTENANCES IN ACCORDANCE WITH SPECIFICATIONS.

GENERAL WORK NOTES

1. CONTRACTOR SHALL COMPLY WITH ALL FEDERAL, STATE, LOCAL, AND SIERRA PACIFIC NETWORK HEALTHCARE SYSTEM REQUIREMENTS AND POLICIES PERTAINING TO COVID-19; INCLUDING TESTING, SOCIAL DISTANCING, WEARING OF PPE, AND ANY OTHER RULES AS REQUIRED BY PROJECT COR.

2. PROVIDE ALL MATERIALS AND EQUIPMENT AND PERFORM ALL LABOR REQUIRED TO INSTALL COMPLETE AND OPERABLE HVAC SYSTEM AS INDICATED ON THE DRAWINGS, AS SPECIFIED, AND AS REQUIRED BY CODE.

3. THE CONTRACTOR IS RESPONSIBLE FOR CHECKING AND VERIFYING ALL SITE CONDITIONS AND DIMENSIONS AND FOR COORDINATION OF THEIR WORK WITH THAT OF ALL OTHER TRADES. CONTRACTOR SHALL PERFORM WORK IN A NEAT, ORDERLY MANNER AND WITH THE LEAST POSSIBLE INTERFERENCES.

4. WORK SHALL CONFORM TO OR MEET THE REQUIREMENTS OF THE MOST CURRENT EDITION OF:
   - A. INTERNATIONAL MECHANICAL CODE; 2018 IMC
   - B. INTERNATIONAL FUEL GAS CODE; 2018 IFGC
   - C. INTERNATIONAL ENERGY CONSERVATION CODE; 2018 IECC
   - D. IBC INTERNATIONAL BUILDING CODE; 2018 IBC
   - E. NEC (NFPA 70)
   - F. ALL FEDERAL, STATE AND LOCAL CODES AND ORDINANCES
   - G. VA HVAC DESIGN GUIDE
   - H. VA HANDBOOK H-18-8 SEISMIC DESIGN REQUIREMENTS

5. THE CONTRACTOR SHALL PROVIDE SENSORS, CONTROLLERS, ACTUATORS, WIRING, ETC. NECESSARY TO INTEGRATE SYSTEMS/EQUIPMENT WITH THE FACILITY BUILDING MANAGEMENT SYSTEM (SEE SPECIFICATIONS AND DRAWINGS).

6. THE CONTRACTOR SHALL PROTECT THE PIPING FROM STRESS AND STRAIN.

7. ALL MATERIALS, EQUIPMENT AND DEVICES SHALL, AS A MINIMUM, MEET THE REQUIREMENTS OF UL WHERE UL REQUIREMENTS ARE ESTABLISHED FOR THOSE ITEMS. ALL ITEMS SHALL BE CLASSIFIED BY UL AS SUITABLE FOR THE PURPOSE OF THE CODE.

8. WHERE PIPES PENETRATE FIRE RATED OR SMOKE RATED BARRIERS (WALLS, FLOORS, AND CEILINGS) CONTRACTOR SHALL SEAL PENETRATIONS IN ACCORDANCE WITH NFPA 90A WITH UL LISTED FIRE STOPPING SYSTEM. UTILIZE PRODUCTS PER VA REQUIREMENTS. REFER TO PROJECT SPECIFICATIONS.

9. COORDINATE LOCATION OF PIPING AND DUCTWORK ABOVE CEILING WITH ELECTRICAL PANELS BY ELECTRICAL CONTRACTOR. DO NOT INSTALL PIPING OR DUCTWORK IN DEDICATED SPACE FOR ELECTRIC PANEL.

10. ALL EQUIPMENT AND MATERIALS INCORPORATED IN THIS WORK SHALL BE NEW UNLESS OTHERWISE NOTED AND SHALL BE CURRENT PRODUCTS BY MANUFACTURERS REGULARLY ENGAGED IN THE PRODUCTION OF SUCH PRODUCTS.

11. ALL EQUIPMENT COATINGS AND FINISHES SHALL BE PROVIDED WITHOUT RUST, SCRATCHES, OR DENTS.

12. CONTRACTOR SHALL PROVIDE COMPLETE LAYOUT DRAWINGS IN ACCORDANCE WITH SPECIFICATIONS SECTION 23 05 11, COMMON WORK RESULTS FOR HVAC, PARAGRAPH - SUBMITTALS. CONSTRUCTION WORK SHALL NOT START ON ANY SYSTEM UNTIL THE LAYOUT DRAWINGS HAVE BEEN REVIEWED BY THE PROFESSIONAL ENGINEER AND THE VA.

13. EQUIPMENT INSTALLED WITHIN WORK AREAS MUST BE INSTALLED PER MANUFACTURER'S RECOMMENDED INSTALLATION INSTRUCTIONS, SPECIFICATIONS, AND VA HANDBOOK H-18-8 SEISMIC DESIGN REQUIREMENTS. CONTRACTOR SHALL PROVIDE STAMPED AND SEALED SHOP DRAWINGS FROM A PROFESSIONAL ENGINEER. REFER TO SPECIFICATION 13 05 41.

MECHANICAL PIPING

FOS — FOS	FUEL OIL SUPPLY
FOR — FOR	FUEL OIL RETURN
D — D	DRAIN

GENERAL MECHANICAL PIPING SYMBOLS

- GATE VALVE
- CHECK VALVE
- ANTI-SYPHON VALVE
- BUTTERFLY VALVE
- BALL VALVE
- TWO POSITION CONTROL VALVE
- CONTROL VALVE (CV) - FLOAT-OPERATED
- PRESSURE REDUCING VALVE (PRV)
- PRS — PRESSURE REDUCING STATION
- LC — WATER LEVEL CONTROLLER
- M — FLOW METER
- PUMP
- INVERTER BUCKET TRAP ASSEMBLY
- PIPE REDUCER
- DIRECTION OF FLOW
- TOP CONNECTION, 45° OR 90°
- BOTTOM CONNECTION, 45° OR 90°
- SIDE CONNECTION
- CAPPED OUTLET
- CAP OR PLUG
- CHANGE OF ELEVATION ON PIPE
- PIPE RISES TO NEXT FLOOR
- PIPE DROPS
- VALVE ON PIPE DROP
- VALVE ON RISE
- PIPE RISES AND DROPS TO NEXT FLOORS
- PIPE ANCHOR
- UNION
- DIRECTION OF FLOW
- STRAINER
- THERMOMETER
- PRESSURE GAGE

EQUIPMENT TYPE
XX
XX — EQUIPMENT TAG REFER TO SCHEDULES
EQUIPMENT NUMBER

EQUIPMENT ABBREVIATIONS
P = PUMP
LDS = LEAK DETECTION SYSTEM CONTROLLER
EX = EXISTING

- LIMIT OF DEMOLITION TAG
- POINT OF CONNECTION BETWEEN NEW AND EXISTING WORK

HATCH STYLES

	DEMOLITION HATCH

NOTE: NOT ALL SYMBOLS USED

Revisions:	Date:

CONSULTANT

ARCHITECT/ENGINEER OF RECORD

NEI Northeast Infrastructure, LLC
34 BROWN STREET
HONESDALE, PA 18431
OFFICE : (570) 253-0846
WWW.NEINFRA.COM

STAMP

Office of Construction and Facilities Management

VA U.S. Department of Veterans Affairs

Drawing Title	MECHANICAL SYMBOLS & NOTES
Phase	BID DOCUMENTS
Project Title	CORRECT MARTINEZ & MARE ISLAND GENERATOR FUEL LINES
Project Number	612-23-005
Building Number	N/A
Approved: Project Director	VA SIERRA PACIFIC NETWORK (VISN 21) VA NORTHERN CALIFORNIA HEALTHCARE SYSTEM
Location	150 MUIR ROAD, MARTINEZ, CA 94553 — 201 WALNUT AVENUE, MARE ISLAND, CA 94592
Issue Date	04/17/2026
Checked	D.L.E.
Drawn	F.R.O.
Drawing Number	M-001

File Path: 6/14/2009 12:38:03 PM

VA FORM 08 - 6231

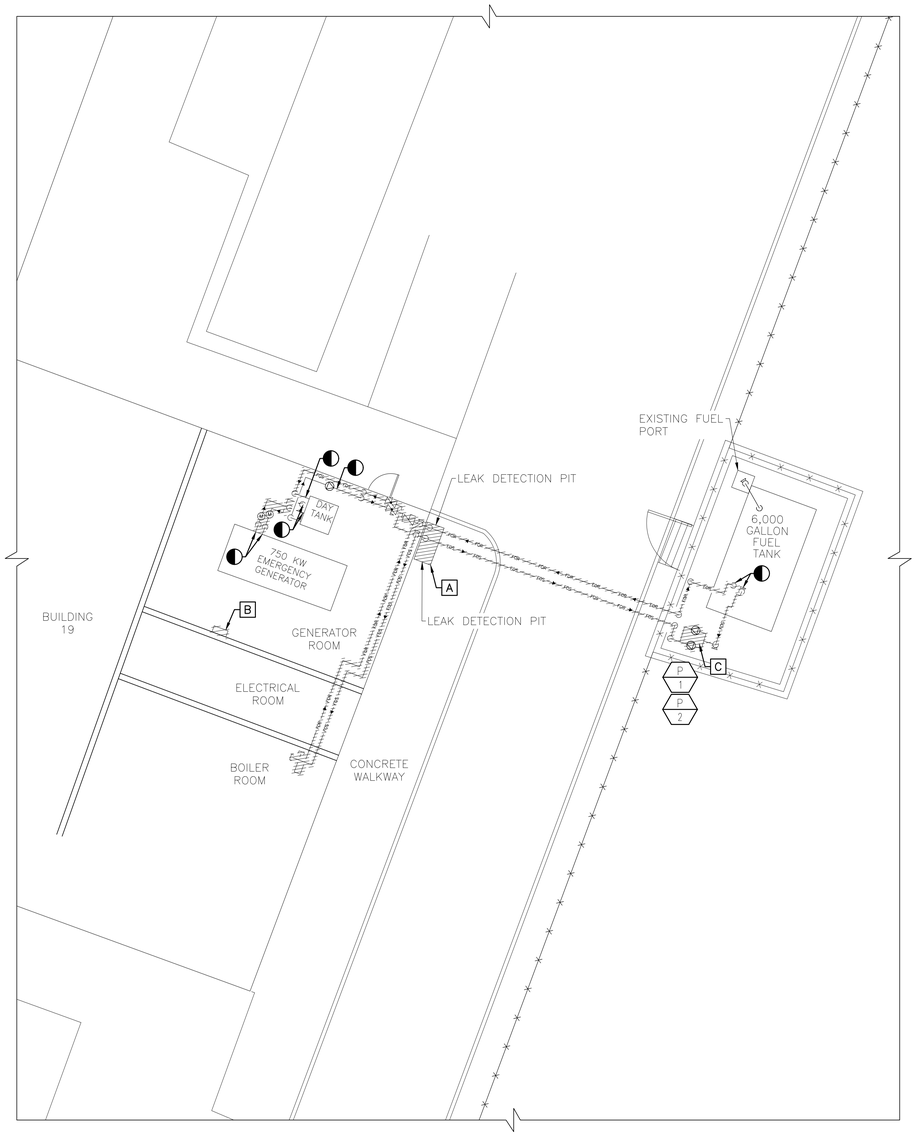

N

1 MP-100

MARTINEZ BUILDING 19
MECHANICAL DEMOLITION PLAN

SCALE: 1/8"=1'-0"

0 6 12 18 24 FT

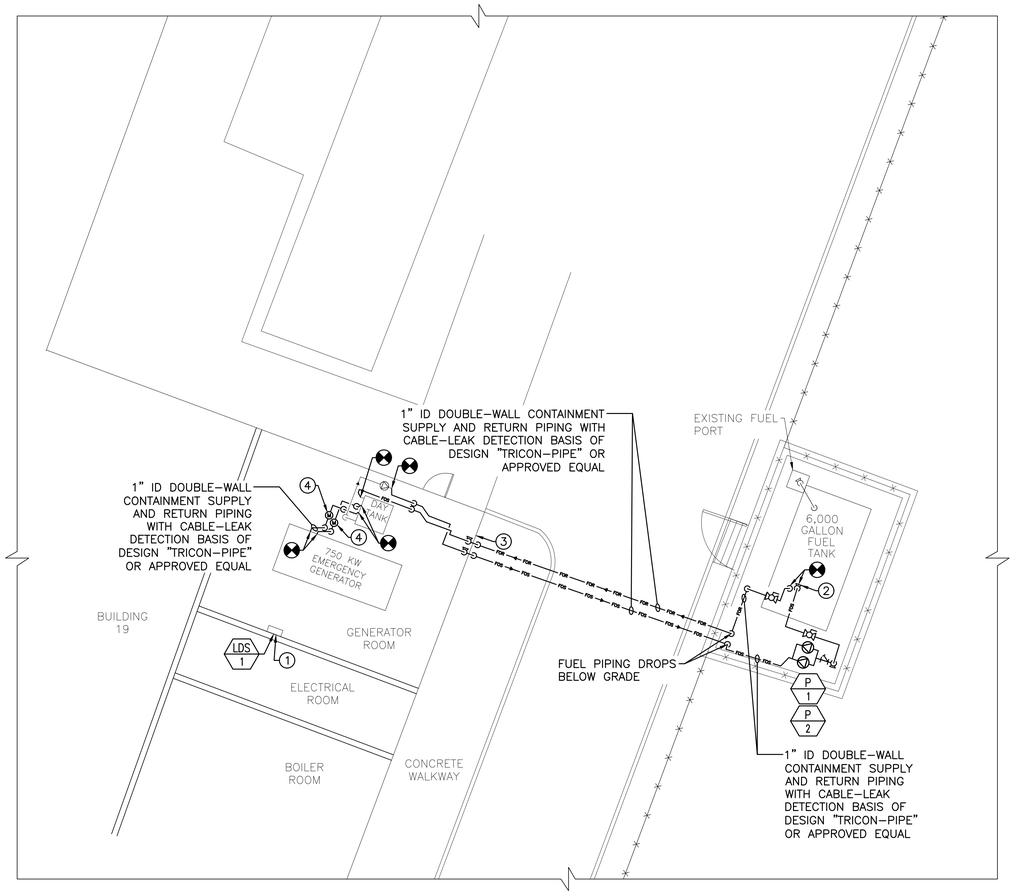

N

2 MP-100

MARTINEZ BUILDING 19
MECHANICAL NEW WORK PLAN

SCALE: 1/8"=1'-0"

0 6 12 18 24 FT

GENERAL DEMOLITION NOTES

I. CONTRACTOR SHALL DISPOSE OF EXISTING MATERIAL THAT HAS BEEN REMOVED FROM THE SYSTEM AND DISPOSE OF UNUSED FUEL. CONTRACTOR SHALL ENSURE THAT DISPOSAL METHODS THAT COMPLY WITH LOCAL, STATE, AND FEDERAL REGULATIONS ARE UTILIZED.

II. SEE M-600 FOR ALL ASSOCIATED EQUIPMENT SCHEDULES.

III. CONTRACTOR SHALL VERIFY FUEL OIL SUPPLY AND FUEL OIL RETURN CONNECTIONS TO BULK STORAGE TANK AS THEY UTILIZE THE SAME PORT. CONTRACTOR SHALL SUBMIT SHOP DRAWING INDICATING SEPARATE FUEL OIL SUPPLY AND FUEL OIL RETURN CONNECTIONS TO BULK STORAGE TANK.

KEYED DEMOLITION NOTES

[A] REMOVE EXISTING LEAK DETECTION SYSTEM COMPONENTS INCLUDING SENSORS, PREFABRICATED LEAK DETECTION INSERTION BASIN, AND ALL ASSOCIATED POWER AND DATA CONNECTIONS FROM LEAK DETECTION PIT.

[B] REMOVE EXISTING LEAK DETECTION SYSTEM CONTROLLER AND ALL ASSOCIATED POWER AND DATA CONNECTIONS. SEE ASSOCIATED ELECTRICAL PLANS FOR ADDITIONAL DETAIL.

[C] CONTRACTOR SHALL REMOVE EXISTING PUMPS, ALARMS, AND LEAK DETECTION EQUIPMENT ATTACHED TO EXISTING PUMP ENCLOSURE AND PRESERVE FOR REINSTALLATION.

GENERAL NEW WORK NOTES

I. CONTRACTOR SHALL UTILIZE EXISTING FUEL PIPING AND EQUIPMENT TO ENSURE THE EMERGENCY GENERATOR MAINTAINS OPERATION THROUGHOUT THE DURATION OF CONSTRUCTION.

II. CONTRACTOR SHALL REFER TO PHASING PLANS FOR FURTHER DETAILS OUTLINING THE REQUIRED ORDER OF OPERATIONS FOR COMPLETION OF CONSTRUCTION.

III. CONTRACTOR SHALL ENSURE LEAK DETECTION SYSTEM COMPLIES WITH ALL STATE AND LOCAL REQUIREMENTS.

IV. CONTRACTOR SHALL INSTALL REPLACEMENT FUEL PIPING IN PARALLEL TO EXISTING AND ENSURE ADEQUATE SPACE IS LEFT TO BE ABLE TO DEMOLISH EXISTING FUEL PIPING UPON SUCCESSFUL INSTALLATION OF REPLACEMENT PIPING.

V. CONTRACTOR SHALL VERIFY FUEL OIL SUPPLY AND FUEL OIL RETURN CONNECTIONS TO BULK STORAGE TANK AS THEY UTILIZE THE SAME PORT. CONTRACTOR SHALL SUBMIT SHOP DRAWING INDICATING SEPARATE FUEL OIL SUPPLY AND FUEL OIL RETURN CONNECTIONS TO BULK STORAGE TANK.

KEYED NOTES

(1) PROVIDE LEAK DETECTION SYSTEM CONTROLLER. SEE ASSOCIATED ELECTRICAL AND CONTROLS DRAWINGS FOR REQUIRED POWER AND DATA CONNECTIONS.

(2) PROVIDE ANTI-SIPHON VALVE.

(3) CONTRACTOR SHALL REPAIR AND MATCH EXISTING FACADE WHERE EXISTING PIPE PENETRATIONS ARE LOCATED THROUGH EXTERIOR WALL. CONTRACTOR SHALL SUBMIT FINISHES AND MATERIALS PRIOR TO THE DEMOLITION OF EXISTING PIPING.

(4) PROVIDE IN LINE FLOW METER BASIS OF DESING "MACNAUGHT OVAL GEAR FLOWMETER MECHANICAL MODEL 025 (1")" OR APPROVED EQUAL WITH BY PASS. INSTALL PER MANUFACTURERS RECCOMENDED INSTALLATION INSTRUCTIONS.

Revisions:	Date:

CONSULTANT

ARCHITECT/ENGINEER OF RECORD

NEI Northeast Infrastructure, LLC
34 BROWN STREET
HONESDALE, PA 18431
OFFICE : (570) 253-0846
WWW.NEINFRA.COM

STAMP

COMMONWEALTH OF PENNSYLVANIA REGISTERED PROFESSIONAL ENGINEER No. PE045118

Office of Construction and Facilities Management

VA U.S. Department of Veterans Affairs

Drawing Title: MARTINEZ BUILDING 19 MECHANICAL PLANS	Phase: BID DOCUMENTS
Approved: Project Director: VA SIERRA PACIFIC NETWORK (VISN 21) VA NORTHERN CALIFORNIA HEALTHCARE SYSTEM	
Project Title: CORRECT MARTINEZ & MARE ISLAND GENERATOR FUEL LINES	Project Number: 612-23-005
	Building Number: 19
Location: 150 MUIR ROAD MARTINEZ, CA 94553 / 201 WALNUT AVENUE MARE ISLAND, CA 94592	Drawing Number: MP-100
Issue Date: 04/17/2026	Checked: D.L.E. / Drawn: J.R.H.

File Path: 6/14/2009 12:39:03 PM

VA FORM 08 - 6231

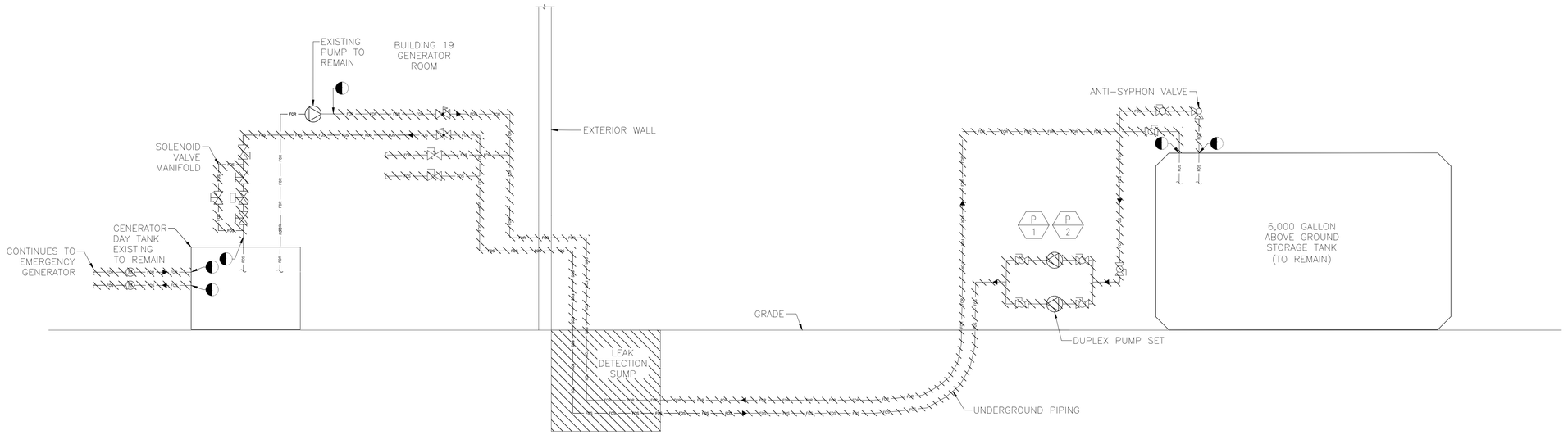

1 MP-101

MARTINEZ BUILDING 19 MECHANICAL DEMOLITION SCHEMATIC

SCALE: NO SCALE

NOTE: DRAWING IS GENERALLY DIAGRAMATIC REPRESENTING A SCHEMATIC DETAIL OF PROPER CONNECTION FROM FUEL OIL TANKS TO ASSOCIATED EQUIPMENT. FOR EXACT PIPE ROUTING AND EQUIPMENT PLACEMENT SEE MECHANICAL NEW WORK PLANS.

GENERAL DEMOLITION NOTES

I. CONTRACTOR SHALL HAUL AWAY EXISTING MATERIAL THAT HAS BEEN REMOVED FROM THE SYSTEM AND DISPOSE OF UNUSED FUEL. CONTRACTOR SHALL ENSURE THAT DISPOSAL METHODS THAT COMPLY WITH LOCAL, STATE, AND FEDERAL REGULATIONS ARE UTILIZED.

II. CONTRACTOR SHALL VERIFY FUEL OIL SUPPLY AND FUEL OIL RETURN CONNECTIONS TO BULK STORAGE TANK AS THEY UTILIZE THE SAME PORT. CONTRACTOR SHALL SUBMIT SHOP DRAWING INDICATING SEPARATE FUEL OIL SUPPLY AND FUEL OIL RETURN CONNECTIONS TO BULK STORAGE TANK.

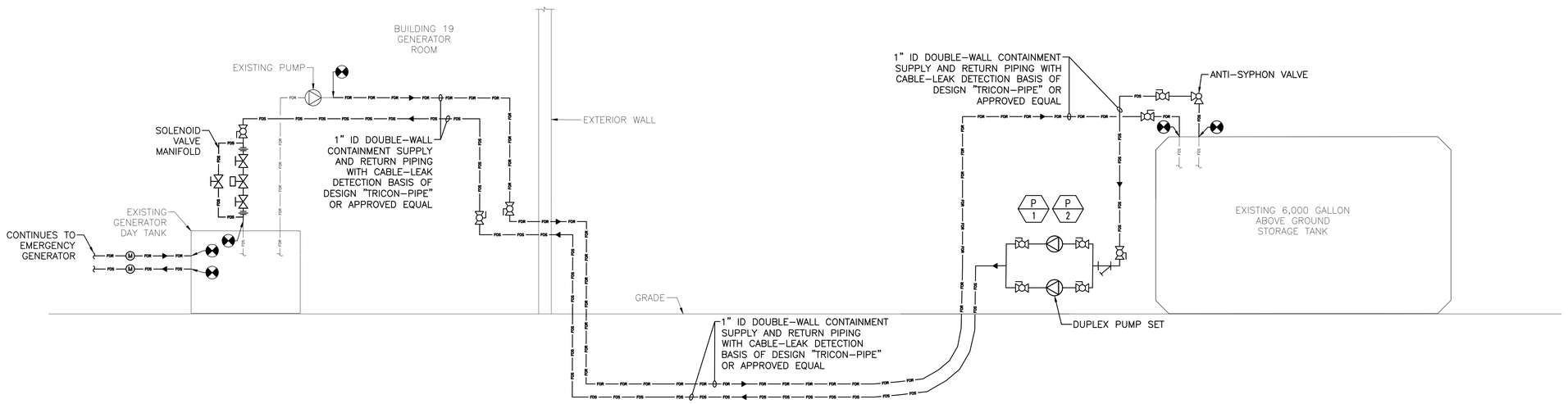

2 MP-101

MARTINEZ BUILDING 19 MECHANICAL NEW WORK SCHEMATIC

SCALE: NO SCALE

NOTE: DRAWING IS GENERALLY DIAGRAMATIC REPRESENTING A SCHEMATIC DETAIL OF PROPER CONNECTION FROM FUEL OIL TANKS TO ASSOCIATED EQUIPMENT. FOR EXACT PIPE ROUTING AND EQUIPMENT PLACEMENT SEE MECHANICAL NEW WORK PLANS.

GENERAL NOTES

I. CONTRACTOR SHALL UTILIZE EXISTING FUEL PIPING AND EQUIPMENT TO ENSURE THE EMERGENCY GENERATOR MAINTAINS OPERATION THROUGHOUT THE DURATION OF CONSTRUCTION.

II. CONTRACTOR SHALL REFER TO PHASING PLANS FOR FURTHER DETAILS OUTLINING THE ORDER OF CONSTRUCTION.

III. CONTRACTOR SHALL VERIFY FUEL OIL SUPPLY AND FUEL OIL RETURN CONNECTIONS TO BULK STORAGE TANK AS THEY UTILIZE THE SAME PORT. CONTRACTOR SHALL SUBMIT SHOP DRAWING INDICATING SEPARATE FUEL OIL SUPPLY AND FUEL OIL RETURN CONNECTIONS TO BULK STORAGE TANK.

Revisions:	Date:

CONSULTANT

ARCHITECT/ENGINEER OF RECORD

NEI Northeast Infrastructure, LLC
34 BROWN STREET
HONESDALE, PA 18431
OFFICE : (570) 253-0846
WWW.NEINFRA.COM

STAMP

Office of Construction and Facilities Management

VA U.S. Department of Veterans Affairs

Drawing Title: MARTINEZ BUILDING 19 MECHANICAL SCHEMATICS	Phase: BID DOCUMENTS
Approved: Project Director: VA SIERRA PACIFIC NETWORK (VISN 21) VA NORTHERN CALIFORNIA HEALTHCARE SYSTEM	

Project Title: CORRECT MARTINEZ & MARE ISLAND GENERATOR FUEL LINES	Project Number: 612-23-005
	Building Number: 19
Location: 150 MUIR ROAD MARTINEZ, CA 94553 / 201 WALNUT AVENUE MARE ISLAND, CA 94592	Drawing Number: MP-101
Issue Date: 04/17/2026	Checked: D.L.E. / Drawn: F.R.O.

File Path: 6/14/2009 12:28:03 PM

VA FORM 08 - 6231

GENERAL DEMOLITION NOTES

I. CONTRACTOR SHALL DISPOSE OF EXISTING MATERIAL THAT HAS BEEN REMOVED FROM THE SYSTEM AND DISPOSE OF UNUSED FUEL. CONTRACTOR SHALL ENSURE THAT DISPOSAL METHODS THAT COMPLY WITH LOCAL, STATE, AND FEDERAL REGULATIONS ARE UTILIZED.

II. CONTRACTOR SHALL VERIFY FUEL OIL SUPPLY AND FUEL OIL RETURN CONNECTIONS TO BULK STORAGE TANK AS THEY UTILIZE THE SAME PORT. CONTRACTOR SHALL SUBMIT SHOP DRAWING INDICATING SEPARATE FUEL OIL SUPPLY AND FUEL OIL RETURN CONNECTIONS TO BULK STORAGE TANK.

KEYED DEMOLITION NOTES

[A] REMOVE EXISTING LEAK DETECTION SYSTEM COMPONENTS INCLUDING SENSORS, PREFABRICATED LEAK DETECTION INSERTION BASIN, AND ALL ASSOCIATED POWER AND DATA CONNECTIONS FROM LEAK DETECTION PIT.

[B] CONTRACTOR SHALL REMOVE EXISTING PUMPS, ALARMS, AND LEAK DETECTION EQUIPMENT ATTACHED TO EXISTING PUMP ENCLOSURE AND PRESERVE FOR REINSTALLATION.

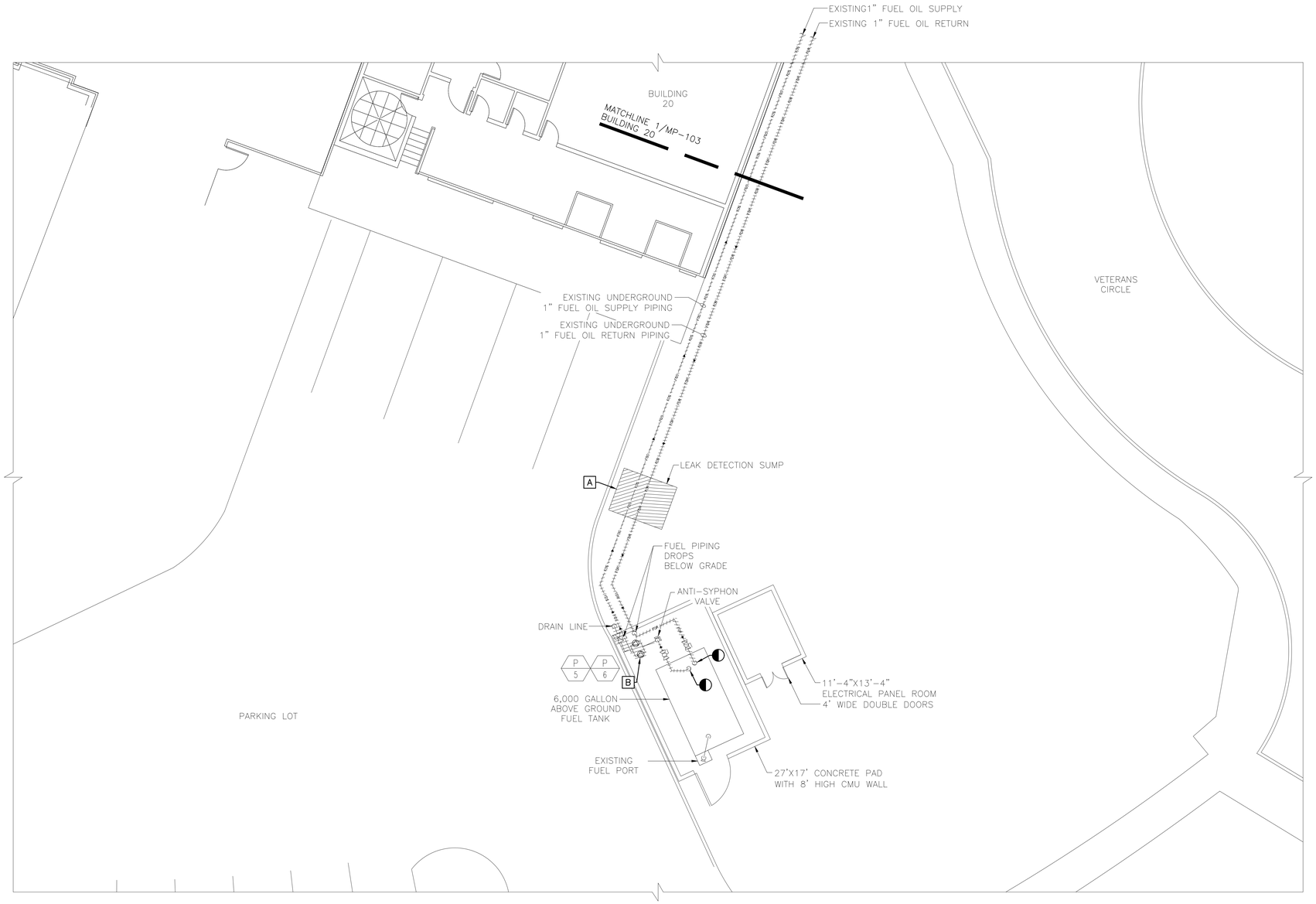

N

1
MP-102

MARTINEZ BUILDING 20
MECHANICAL DEMOLITION PLAN 1

SCALE: 1/8"=1'-0"

0 6 12 18 24 FT

Revisions:	Date:

CONSULTANT

ARCHITECT/ENGINEER OF RECORD

NEI Northeast Infrastructure, LLC
34 BROWN STREET
HONESDALE, PA 18431
OFFICE : (570) 253-0846
WWW.NEINFRA.COM

STAMP

COMMONWEALTH OF PENNSYLVANIA REGISTERED PROFESSIONAL ENGINEER No. PE045514E

Office of Construction and Facilities Management

VA U.S. Department of Veterans Affairs

Drawing Title	MARTINEZ BUILDING 20 MECHANICAL DEMOLITION PLAN 1
Phase	BID DOCUMENTS
Project Title	CORRECT MARTINEZ & MARE ISLAND GENERATOR FUEL LINES
Project Number	612-23-005
Building Number	20
Approved: Project Director	VA SIERRA PACIFIC NETWORK (VISN 21) VA NORTHERN CALIFORNIA HEALTHCARE SYSTEM
Location	150 MUIR ROAD MARTINEZ, CA 94553 / 201 WALNUT AVENUE MARE ISLAND, CA 94592
Issue Date	04/17/2026
Checked	D.L.E.
Drawn	J.R.H.
Drawing Number	MP-102

6/14/2009 12:39:03 PM

File Path:

VA FORM 08 - 6231

GENERAL DEMOLITION NOTES

I. CONTRACTOR SHALL DISPOSE OF EXISTING MATERIAL THAT HAS BEEN REMOVED FROM THE SYSTEM AND DISPOSE OF UNUSED FUEL. CONTRACTOR SHALL ENSURE THAT DISPOSAL METHODS THAT COMPLY WITH LOCAL, STATE, AND FEDERAL REGULATIONS ARE UTILIZED.

II. CONTRACTOR SHALL VERIFY FUEL OIL SUPPLY AND FUEL OIL RETURN CONNECTIONS TO BULK STORAGE TANK AS THEY UTILIZE THE SAME PORT. CONTRACTOR SHALL SUBMIT SHOP DRAWING INDICATING SEPARATE FUEL OIL SUPPLY AND FUEL OIL RETURN CONNECTIONS TO BULK STORAGE TANK.

KEYED DEMOLITION NOTE

A REMOVE EXISTING LEAK DETECTION SYSTEM CONTROLLER AND ALL ASSOCIATED POWER AND DATA CONNECTIONS. SEE ASSOCIATED ELECTRICAL PLANS FOR ADDITIONAL DETAIL.

1 MP-103 MARTINEZ BUILDING 20 MECHANICAL DEMOLITION PLAN 2

SCALE: 1/8"=1'-0"

0 6 12 18 24 FT

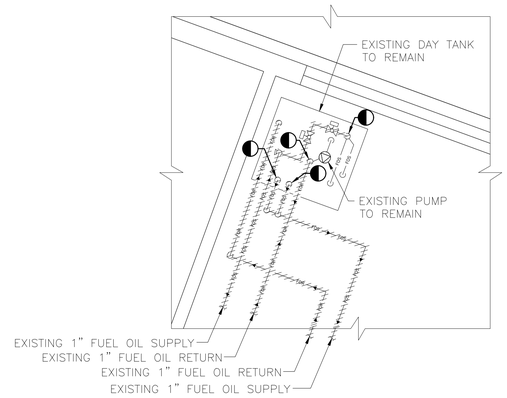

2 MP-103 MARTINEZ BUILDING 20 ENLARGED MECHANICAL DEMOLITION PLAN

SCALE: 1/2"=1'-0"

0 2 4 6 FT

Revisions:	Date:

CONSULTANT

ARCHITECT/ENGINEER OF RECORD

NEI Northeast Infrastructure, LLC

34 BROWN STREET
HONESDALE, PA 18431
OFFICE : (570) 253-0846
WWW.NEINFRA.COM

STAMP

REGISTERED PROFESSIONAL ENGINEER No. PE045114E

Office of Construction and Facilities Management

VA U.S. Department of Veterans Affairs

Drawing Title	Phase	Project Title	Project Number
MARTINEZ BUILDING 20 MECHANICAL DEMOLITION PLANS 2	BID DOCUMENTS	CORRECT MARTINEZ & MARE ISLAND GENERATOR FUEL LINES	612-23-005
			Building Number: 20
Approved: Project Director: VA SIERRA PACIFIC NETWORK (VISN 21) VA NORTHERN CALIFORNIA HEALTHCARE SYSTEM		Location: 150 MUIR ROAD MARTINEZ, CA 94553; 201 WALNUT AVENUE MARE ISLAND, CA 94592	Drawing Number: MP-103
		Issue Date: 04/17/2026; Checked: D.L.E.; Drawn: J.R.H.	

File Path

VA FORM 08 - 6231

6/14/2009 12:39:03 PM

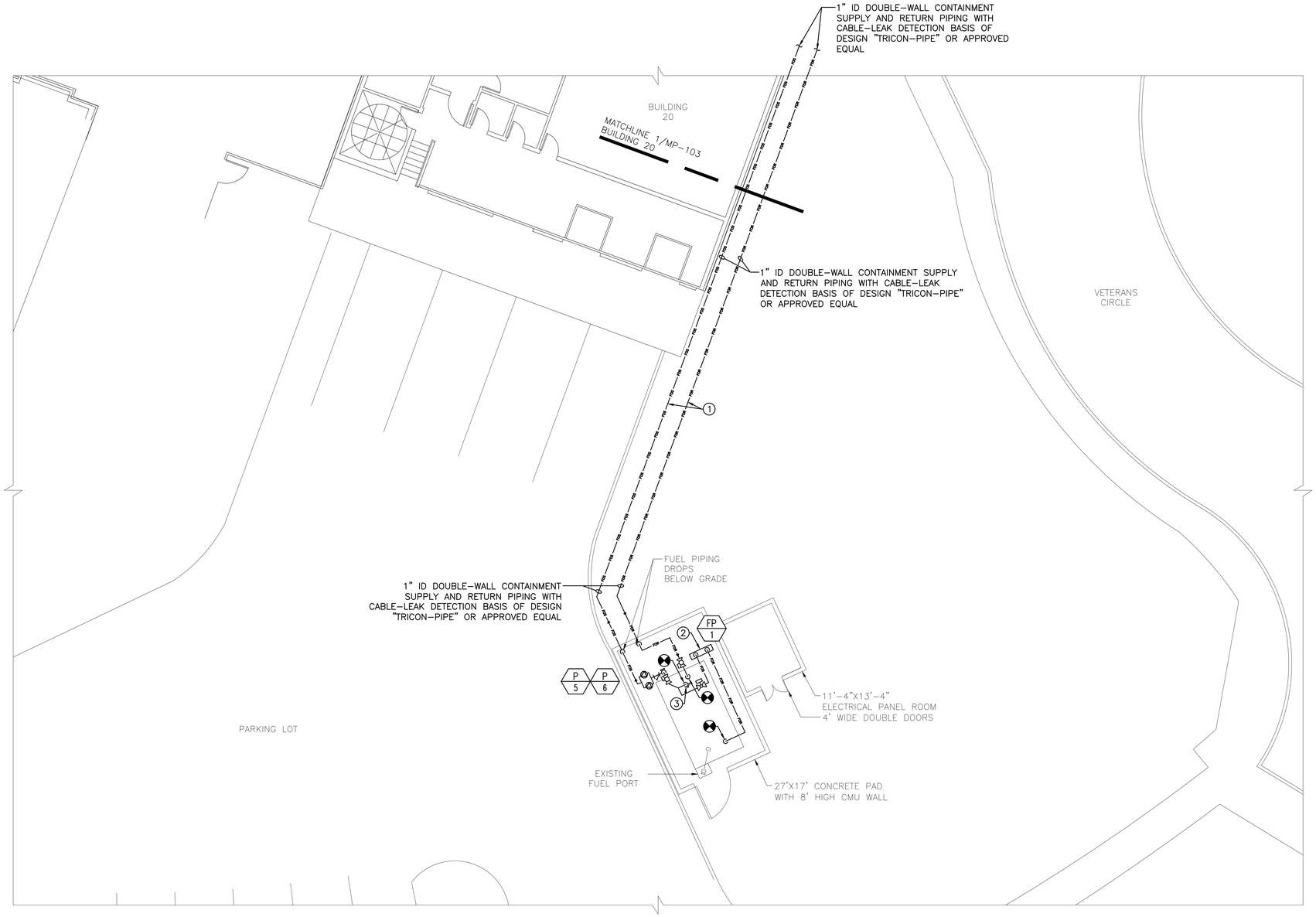

GENERAL NOTES

I. CONTRACTOR SHALL UTILIZE EXISTING FUEL PIPING AND EQUIPMENT TO ENSURE THE EMERGENCY GENERATOR MAINTAINS OPERATION THROUGHOUT THE DURATION OF CONSTRUCTION.

II. CONTRACTOR SHALL REFER TO PHASING PLANS FOR FURTHER DETAILS OUTLINING THE ORDER OF CONSTRUCTION.

III. CONTRACTOR SHALL ENSURE LEAK DETECTION SYSTEM COMPLIES WITH ALL STATE AND LOCAL REQUIREMENTS.

IV. SEE M-600 FOR ALL ASSOCIATED EQUIPMENT SCHEDULES.

V. CONTRACTOR SHALL MODIFY FUEL TANK FOR INTEGRATION OF FUEL POLISHING SYSTEM.

VI. CONTRACTOR SHALL INSTALL REPLACEMENT FUEL PIPING IN PARALLEL TO EXISTING AND ENSURE ADEQUATE SPACE IS LEFT TO BE ABLE TO DEMOLISH EXISTING FUEL PIPING UPON SUCCESSFUL INSTALLATION OF REPLACEMENT PIPING.

VII. CONTRACTOR SHALL VERIFY FUEL OIL SUPPLY AND FUEL OIL RETURN CONNECTIONS TO BULK STORAGE TANK AS THEY UTILIZE THE SAME PORT. CONTRACTOR SHALL SUBMIT SHOP DRAWING INDICATING SEPARATE FUEL OIL SUPPLY AND FUEL OIL RETURN CONNECTIONS TO BULK STORAGE TANK.

KEYED NOTES

1. PROVIDE PIPING TO BOILER DAY TANK INCLUDING ALL ASSOCIATED VALVES AND APPURTENANCES.
2. PROVIDE BASIS OF DESIGN OR APPROVED EQUAL "PREFERRED UTILITIES MFG CORPORATION PF-505-RB" FUEL POLISHING SYSTEM. SEE ASSOCIATED DETAILS INCLUDED FOR TANK CONNECTIONS.
3. PROVIDE ANTI-SIPHON VALVE AND BALL VALVE.

N

1
MP-104

MARTINEZ BUILDING 20
MECHANICAL NEW WORK PLAN 1

SCALE: 1/8"=1'-0"

0 6 12 18 24 FT

Revisions:	Date:

CONSULTANT

ARCHITECT/ENGINEER OF RECORD

NEI Northeast Infrastructure, LLC
34 BROWN STREET
HONESDALE, PA 18431
OFFICE : (570) 253-0846
WWW.NEINFRA.COM

STAMP

COMMONWEALTH OF PENNSYLVANIA REGISTERED PROFESSIONAL ENGINEER No. PE045114E

Office of Construction and Facilities Management

U.S. Department of Veterans Affairs

Drawing Title: MARTINEZ BUILDING 20 MECHANICAL NEW WORK PLAN 1	Phase: BID DOCUMENTS
Approved: Project Director: VA SIERRA PACIFIC NETWORK (VISN 21) VA NORTHERN CALIFORNIA HEALTHCARE SYSTEM	

Project Title: CORRECT MARTINEZ & MARE ISLAND GENERATOR FUEL LINES			Project Number: 612-23-005
			Building Number: 20
Location: 150 MUIR ROAD MARTINEZ, CA 94553	201 WALNUT AVENUE MARE ISLAND, CA 94592		Drawing Number: MP-104
Issue Date: 04/17/2026	Checked: D.L.E.	Drawn: J.R.H.	

6/14/2009 12:39:03 PM

File Path

VA FORM 08 - 6231

GENERAL NOTES

I. CONTRACTOR SHALL UTILIZE EXISTING FUEL PIPING AND EQUIPMENT TO ENSURE THE EMERGENCY GENERATOR MAINTAINS OPERATION THROUGHOUT THE DURATION OF CONSTRUCTION.

II. CONTRACTOR SHALL REFER TO PHASING PLANS FOR FURTHER DETAILS OUTLINING THE ORDER OF CONSTRUCTION.

III. CONTRACTOR SHALL ENSURE LEAK DETECTION SYSTEM COMPLIES WITH ALL STATE AND LOCAL REQUIREMENTS.

IV. SEE M-600 FOR ALL ASSOCIATED EQUIPMENT SCHEDULES.

V. CONTRACTOR SHALL MODIFY FUEL TANK FOR INTEGRATION OF FUEL POLISHING SYSTEM.

VI. CONTRACTOR SHALL INSTALL REPLACEMENT FUEL PIPING IN PARALLEL TO EXISTING AND ENSURE ADEQUATE SPACE IS LEFT TO BE ABLE TO DEMOLISH EXISTING FUEL PIPING UPON SUCCESSFUL INSTALLATION OF REPLACEMENT PIPING.

VII. CONTRACTOR SHALL VERIFY FUEL OIL SUPPLY AND FUEL OIL RETURN CONNECTIONS TO BULK STORAGE TANK AS THEY UTILIZE THE SAME PORT. CONTRACTOR SHALL SUBMIT SHOP DRAWING INDICATING SEPARATE FUEL OIL SUPPLY AND FUEL OIL RETURN CONNECTIONS TO BULK STORAGE TANK.

KEYED NOTES

1. PROVIDE PIPING TO BOILER DAY TANK INCLUDING ALL ASSOCIATED VALVES AND APPURTENANCES.
2. PROVIDE LEAK DETECTION SYSTEM CONTROLLER. SEE ASSOCIATED ELECTRICAL AND CONTROLS DRAWINGS FOR REQUIRED POWER AND DATA CONNECTIONS.
3. CONTRACTOR SHALL PROVIDE BALL VALVE.
4. CONTRACTOR SHALL REPAIR AND MATCH EXISTING FACADE WHERE EXISTING PIPE PENETRATIONS ARE LOCATED THROUGH EXTERIOR WALL. CONTRACTOR SHALL SUBMIT FINISHES AND MATERIALS PRIOR TO THE DEMOLITION OF EXISTING PIPING.
5. PROVIDE IN LINE FLOW METER BASIS OF DESING "MACNAUGHT OVAL GEAR FLOWMETER MECHANICAL MODEL 025 (1")" OR APPROVED EQUAL WITH BY PASS. INSTALL PER MANUFACTURERS RECCOMENDED INSTALLATION INSTRUCTIONS.

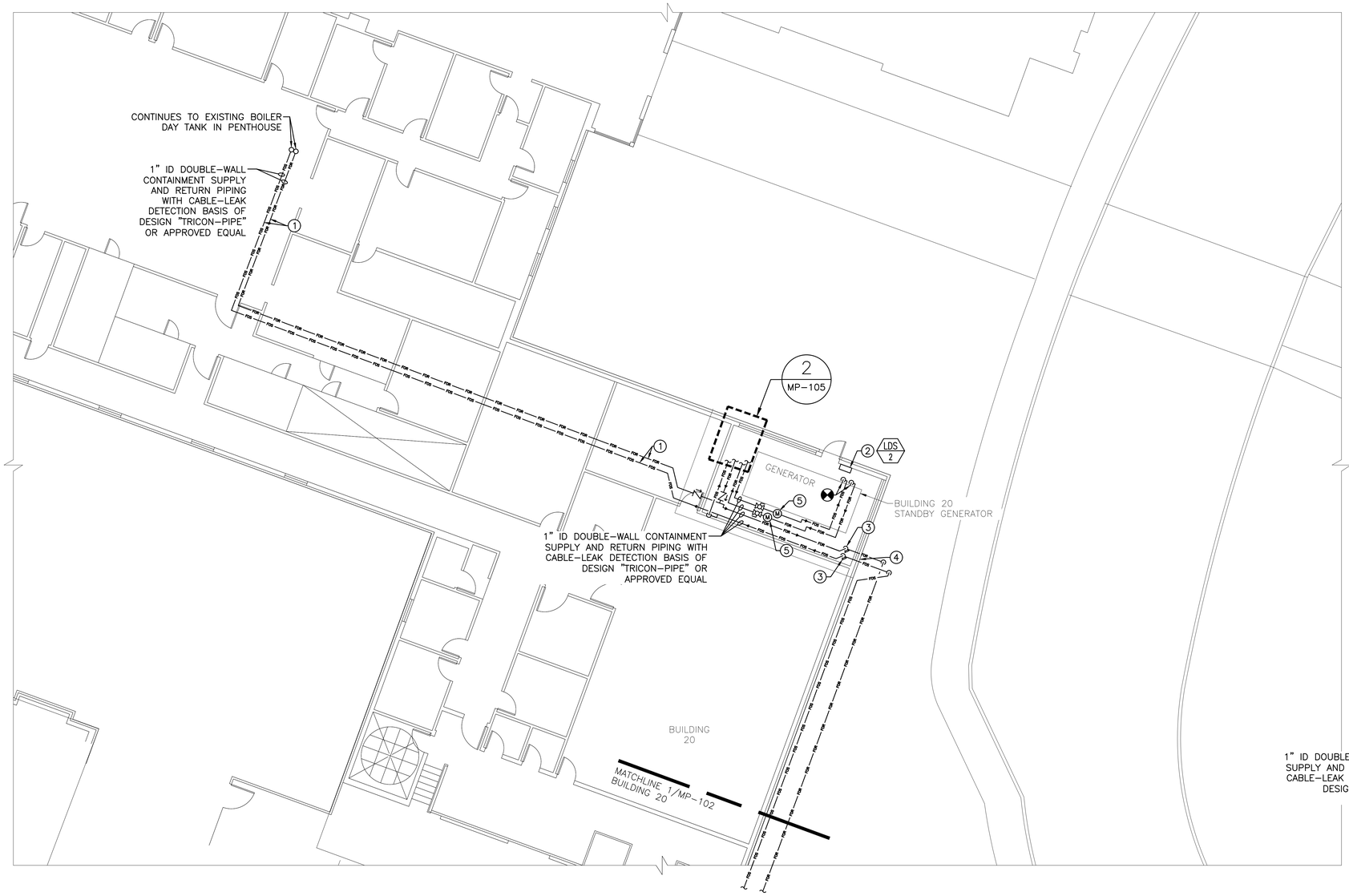

N 1 MP-105

MARTINEZ BUILDING 20
MECHANICAL NEW WORK PLAN 2

SCALE: 1/8"=1'-0"

0 6 12 18 24 FT

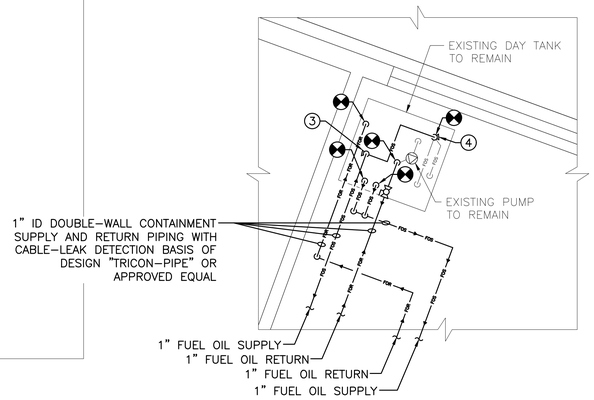

N 2 MP-105

MARTINEZ BUILDING 20
ENLARGED MECHANICAL
NEW WORK PLAN

SCALE: 1/2"=1'-0"

0 2 4 6 FT

Revisions:	Date:

CONSULTANT

ARCHITECT/ENGINEER OF RECORD

NEI Northeast Infrastructure, LLC
34 BROWN STREET
HONESDALE, PA 18431
OFFICE : (570) 253-0846
WWW.NEINFRA.COM

STAMP

Office of Construction and Facilities Management

VA U.S. Department of Veterans Affairs

Drawing Title: MARTINEZ BUILDING 20 MECHANICAL NEW WORK PLANS 2	Phase: BID DOCUMENTS
Approved: Project Director: VA SIERRA PACIFIC NETWORK (VISN 21) VA NORTHERN CALIFORNIA HEALTHCARE SYSTEM	

Project Title: CORRECT MARTINEZ & MARE ISLAND GENERATOR FUEL LINES		Project Number: 612-23-005
		Building Number: 20
Location: 150 MUIR ROAD MARTINEZ, CA 94553 / 201 WALNUT AVENUE MARE ISLAND, CA 94592		Drawing Number: MP-105
Issue Date: 04/17/2026	Checked: D.L.E.	Drawn: J.R.H.

6/14/2609 12:39:03 PM

File Path

VA FORM 08 - 6231

GENERAL NOTES

I. CONTRACTOR SHALL UTILIZE EXISTING FUEL PIPING AND EQUIPMENT TO ENSURE THE EMERGENCY GENERATOR MAINTAINS OPERATION THROUGHOUT THE DURATION OF CONSTRUCTION.

II. CONTRACTOR SHALL REFER TO PHASING PLANS FOR FURTHER DETAILS OUTLINING THE ORDER OF CONSTRUCTION.

III. CONTRACTOR SHALL ENSURE LEAK DETECTION SYSTEM COMPLIES WITH ALL STATE AND LOCAL REQUIREMENTS.

IV. CONTRACTOR SHALL INSTALL REPLACEMENT FUEL PIPING IN PARALLEL TO EXISTING AND ENSURE ADEQUATE SPACE IS LEFT TO BE ABLE TO DEMOLISH EXISTING FUEL PIPING UPON SUCCESSFUL INSTALLATION OF REPLACEMENT PIPING.

V. CONTRACTOR SHALL VERIFY FUEL OIL SUPPLY AND FUEL OIL RETURN CONNECTIONS TO BULK STORAGE TANK AS THEY UTILIZE THE SAME PORT. CONTRACTOR SHALL SUBMIT SHOP DRAWING INDICATING SEPARATE FUEL OIL SUPPLY AND FUEL OIL RETURN CONNECTIONS TO BULK STORAGE TANK.

KEYED NOTE

① PROVIDE PIPING TO BOILER DAY TANK INCLUDING ALL ASSOCIATED VALVES AND APPURTENANCES.

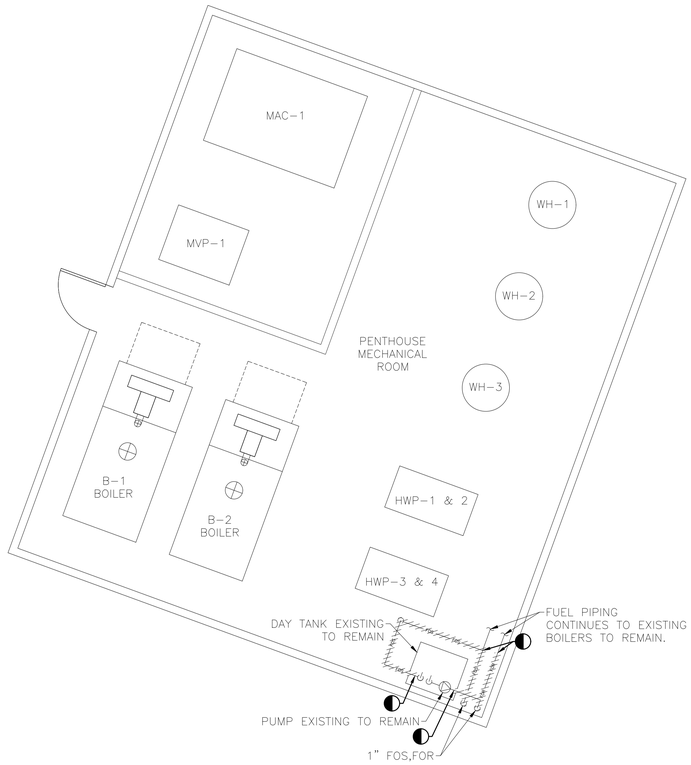

N

1 MP–106

MARTINEZ BUILDING 20 PENTHOUSE MECHANICAL DEMOLITION PLAN

SCALE: 1/4"=1'–0"

0 3 6 9 12 FT

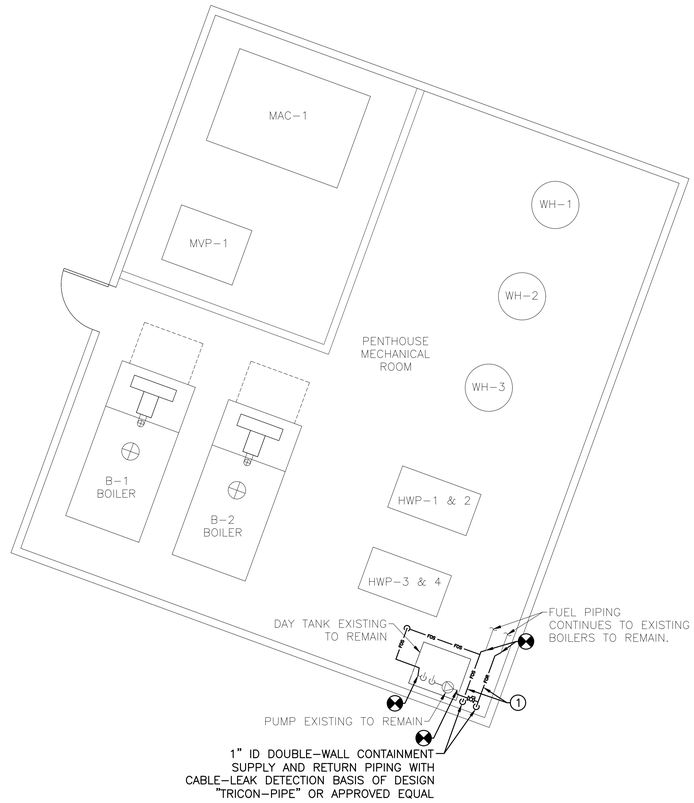

N

2 MP–106

MARTINEZ BUILDING 20 PENTHOUSE MECHANICAL NEW WORK PLAN

SCALE: 1/4"=1'–0"

0 3 6 9 12 FT

Revisions:	Date:

CONSULTANT

ARCHITECT/ENGINEER OF RECORD

NEI Northeast Infrastructure, LLC

34 BROWN STREET
HONESDALE, PA 18431

OFFICE : (570) 253-0846
WWW.NEINFRA.COM

STAMP

COMMONWEALTH OF PENNSYLVANIA REGISTERED PROFESSIONAL ENGINEER No. PE045114E

Office of Construction and Facilities Management

VA U.S. Department of Veterans Affairs

Drawing Title: MARTINEZ BUILDING 20 PENTHOUSE MECHANICAL PLANS	Phase: BID DOCUMENTS	Project Title: CORRECT MARTINEZ & MARE ISLAND GENERATOR FUEL LINES	Project Number: 612-23-005
Approved: Project Director: VA SIERRA PACIFIC NETWORK (VISN 21) VA NORTHERN CALIFORNIA HEALTHCARE SYSTEM		Location: 150 MUIR ROAD MARTINEZ, CA 94553 / 201 WALNUT AVENUE MARE ISLAND, CA 94592	Building Number: 20
		Issue Date: 04/17/2026	Checked: D.L.E. / Drawn: J.R.H.
			Drawing Number: MP-106

6/14/2009 12:28:03 PM

File Path

VA FORM 08 - 6231

GENERAL DEMOLITION NOTES

I. CONTRACTOR SHALL HAUL AWAY EXISTING MATERIAL THAT HAS BEEN REMOVED FROM THE SYSTEM AND DISPOSE OF UNUSED FUEL. CONTRACTOR SHALL ENSURE THAT DISPOSAL METHODS THAT COMPLY WITH LOCAL, STATE, AND FEDERAL REGULATIONS ARE UTILIZED.

II. CONTRACTOR SHALL VERIFY FUEL OIL SUPPLY AND FUEL OIL RETURN CONNECTIONS TO BULK STORAGE TANK AS THEY UTILIZE THE SAME PORT. CONTRACTOR SHALL SUBMIT SHOP DRAWING INDICATING SEPARATE FUEL OIL SUPPLY AND FUEL OIL RETURN CONNECTIONS TO BULK STORAGE TANK.

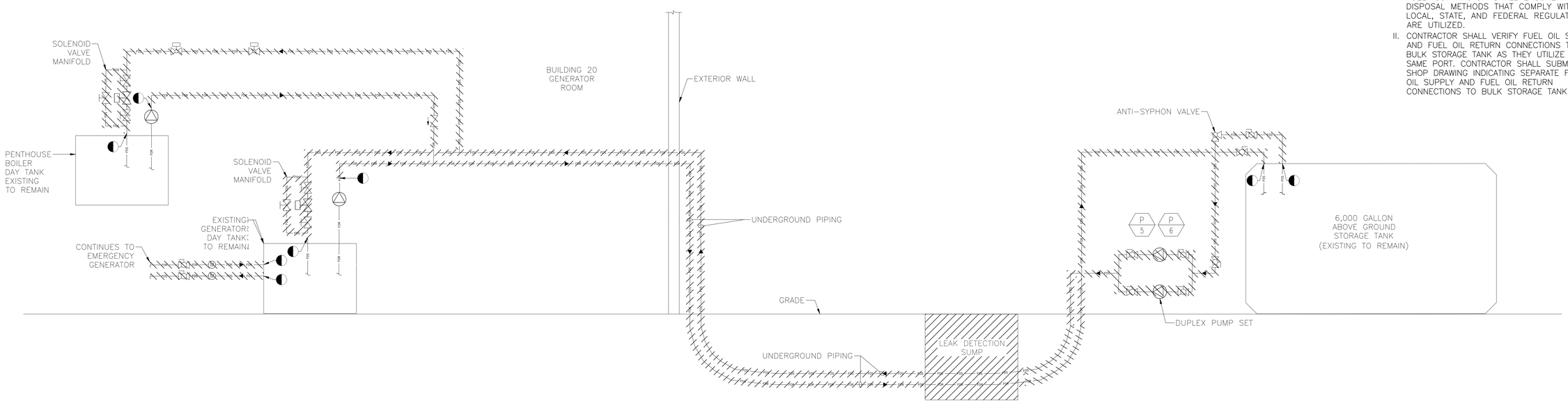

1 MP-107

MARTINEZ BUILDING 20 MECHANICAL DEMOLITION SCHEMATIC

SCALE:NO SCALE

NOTE: DRAWING IS GENERALLY DIAGRAMMATIC REPRESENTING A SCHEMATIC DETAIL OF PROPER CONNECTION FROM FUEL OIL TANKS TO ASSOCIATED EQUIPMENT. FOR EXACT PIPE ROUTING AND EQUIPMENT PLACEMENT SEE MECHANICAL NEW WORK PLANS.

GENERAL NOTES

I. CONTRACTOR SHALL UTILIZE EXISTING FUEL PIPING AND TEMPORARY FUEL TANK TO ENSURE THE EMERGENCY GENERATOR MAINTAINS OPERATION THROUGHOUT THE DURATION OF CONSTRUCTION.

II. CONTRACTOR SHALL REFER TO PHASING PLANS FOR FURTHER DETAILS OUTLINING THE ORDER OF CONSTRUCTION.

III. CONTRACTOR SHALL VERIFY FUEL OIL SUPPLY AND FUEL OIL RETURN CONNECTIONS TO BULK STORAGE TANK AS THEY UTILIZE THE SAME PORT. CONTRACTOR SHALL SUBMIT SHOP DRAWING INDICATING SEPARATE FUEL OIL SUPPLY AND FUEL OIL RETURN CONNECTIONS TO BULK STORAGE TANK.

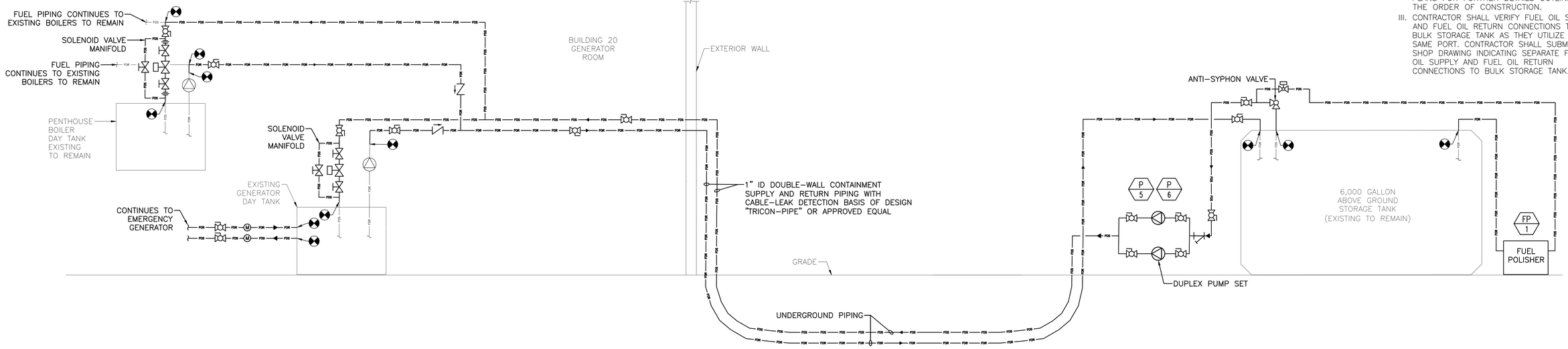

2 MP-107

MARTINEZ BUILDING 20 MECHANICAL NEW WORK SCHEMATIC

SCALE:NO SCALE

NOTE: DRAWING IS GENERALLY DIAGRAMMATIC REPRESENTING A SCHEMATIC DETAIL OF PROPER CONNECTION FROM FUEL OIL TANKS TO ASSOCIATED EQUIPMENT. FOR EXACT PIPE ROUTING AND EQUIPMENT PLACEMENT SEE MECHANICAL NEW WORK PLANS.

Revisions:	Date:

CONSULTANT

ARCHITECT/ENGINEER OF RECORD

NEI Northeast Infrastructure, LLC
34 BROWN STREET
HONESDALE, PA 18431
OFFICE : (570) 253-0846
WWW.NEINFRA.COM

STAMP

Office of Construction and Facilities Management

VA U.S. Department of Veterans Affairs

Drawing Title	Phase	Project Title	Project Number
MARTINEZ BUILDING 20 MECHANICAL SCHEMATICS	BID DOCUMENTS	CORRECT MARTINEZ & MARE ISLAND GENERATOR FUEL LINES	612-23-005
Approved: Project Director: VA SIERRA PACIFIC NETWORK (VISN 21) VA NORTHERN CALIFORNIA HEALTHCARE SYSTEM		Location: 150 MUIR ROAD MARTINEZ, CA 94553; 201 WALNUT AVENUE MARE ISLAND, CA 94592	Building Number: 20
		Issue Date: 04/17/2026; Checked: D.L.E.; Drawn: F.R.O.	Drawing Number: MP-107

File Path

VA FORM 08 - 6231

6/14/2009 12:39:03 PM

GENERAL DEMOLITION NOTES

I. CONTRACTOR SHALL DISPOSE OF EXISTING MATERIAL THAT HAS BEEN REMOVED FROM THE SYSTEM AND DISPOSE OF UNUSED FUEL. CONTRACTOR SHALL ENSURE THAT DISPOSAL METHODS THAT COMPLY WITH LOCAL, STATE, AND FEDERAL REGULATIONS ARE UTILIZED.

II. CONTRACTOR SHALL INSTALL REPLACEMENT FUEL PIPING IN PARALLEL TO EXISTING FUEL PIPING IN ALL LOCATIONS.

III. CONTRACTOR SHALL CONNECT THE EMERGENCY GENERATOR TO THE INSTALLED REPLACEMENT FUEL OIL SYSTEM DURING OFF HOURS. THIS CHANGE–OVER MUST BE COMPLETED PRIOR TO REGULAR BUSINESS HOURS

IV. CONTRACTOR SHALL VERIFY FUEL OIL SUPPLY AND FUEL OIL RETURN CONNECTIONS TO BULK STORAGE TANK AS THEY UTILIZE THE SAME PORT. CONTRACTOR SHALL SUBMIT SHOP DRAWING INDICATING SEPARATE FUEL OIL SUPPLY AND FUEL OIL RETURN CONNECTIONS TO BULK STORAGE TANK.

KEYED DEMOLITION NOTE

[A] CONTRACTOR SHALL REMOVE EXISTING PUMPS, ALARMS, AND LEAK DETECTION EQUIPMENT ATTACHED TO EXISTING PUMP ENCLOSURE AND PRESERVE FOR REINSTALLATION.

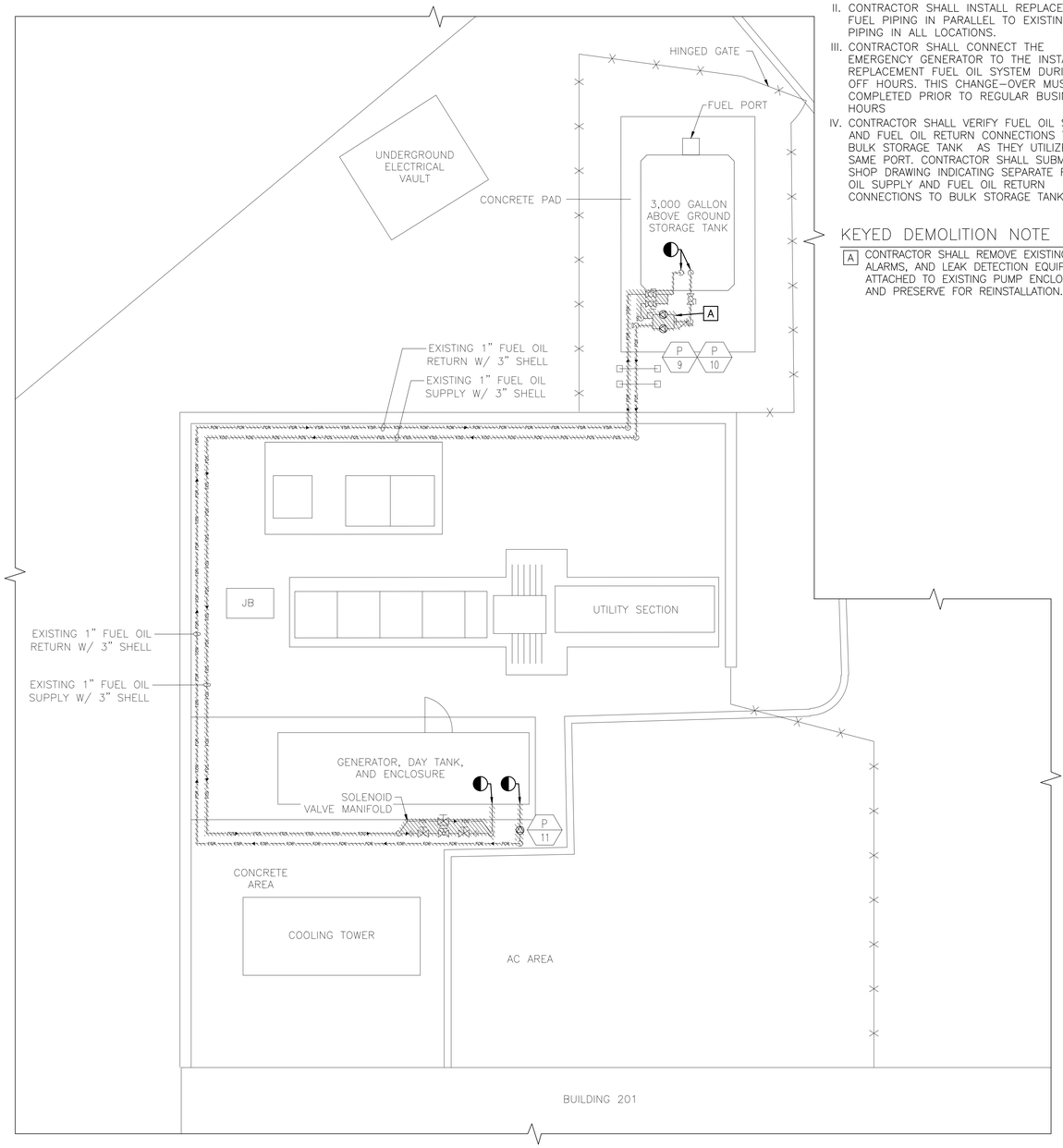

N

1 MP–108

MARE ISLAND MECHANICAL DEMOLITION PLAN

SCALE: 1/4"=1'–0"

0 3 6 9 12 FT

GENERAL NOTES

I. CONTRACTOR SHALL UTILIZE EXISTING FUEL PIPING AND EQUIPMENT TO ENSURE THE EMERGENCY GENERATOR MAINTAINS OPERATION THROUGHOUT THE DURATION OF CONSTRUCTION.

II. CONTRACTOR SHALL REFER TO PHASING PLANS FOR FURTHER DETAILS OUTLINING THE ORDER OF CONSTRUCTION.

III. CONTRACTOR SHALL ENSURE LEAK DETECTION SYSTEM COMPLIES WITH ALL STATE AND LOCAL REQUIREMENTS.

IV. SEE M–600 FOR ALL ASSOCIATED EQUIPMENT SCHEDULES.

V. CONTRACTOR SHALL VERIFY FUEL OIL SUPPLY AND FUEL OIL RETURN CONNECTIONS TO BULK STORAGE TANK AS THEY UTILIZE THE SAME PORT. CONTRACTOR SHALL SUBMIT SHOP DRAWING INDICATING SEPARATE FUEL OIL SUPPLY AND FUEL OIL RETURN CONNECTIONS TO BULK STORAGE TANK.

KEYED NOTES

(1) PROVIDE LEAK DETECTION SYSTEM CONTROLLER. SEE ASSOCIATED ELECTRICAL AND CONTROLS DRAWINGS FOR REQUIRED POWER AND DATA CONNECTIONS.

(2) CONTRACTOR SHALL PROVIDE ANTI–SYPHON VALVE AND BALL VALVE.

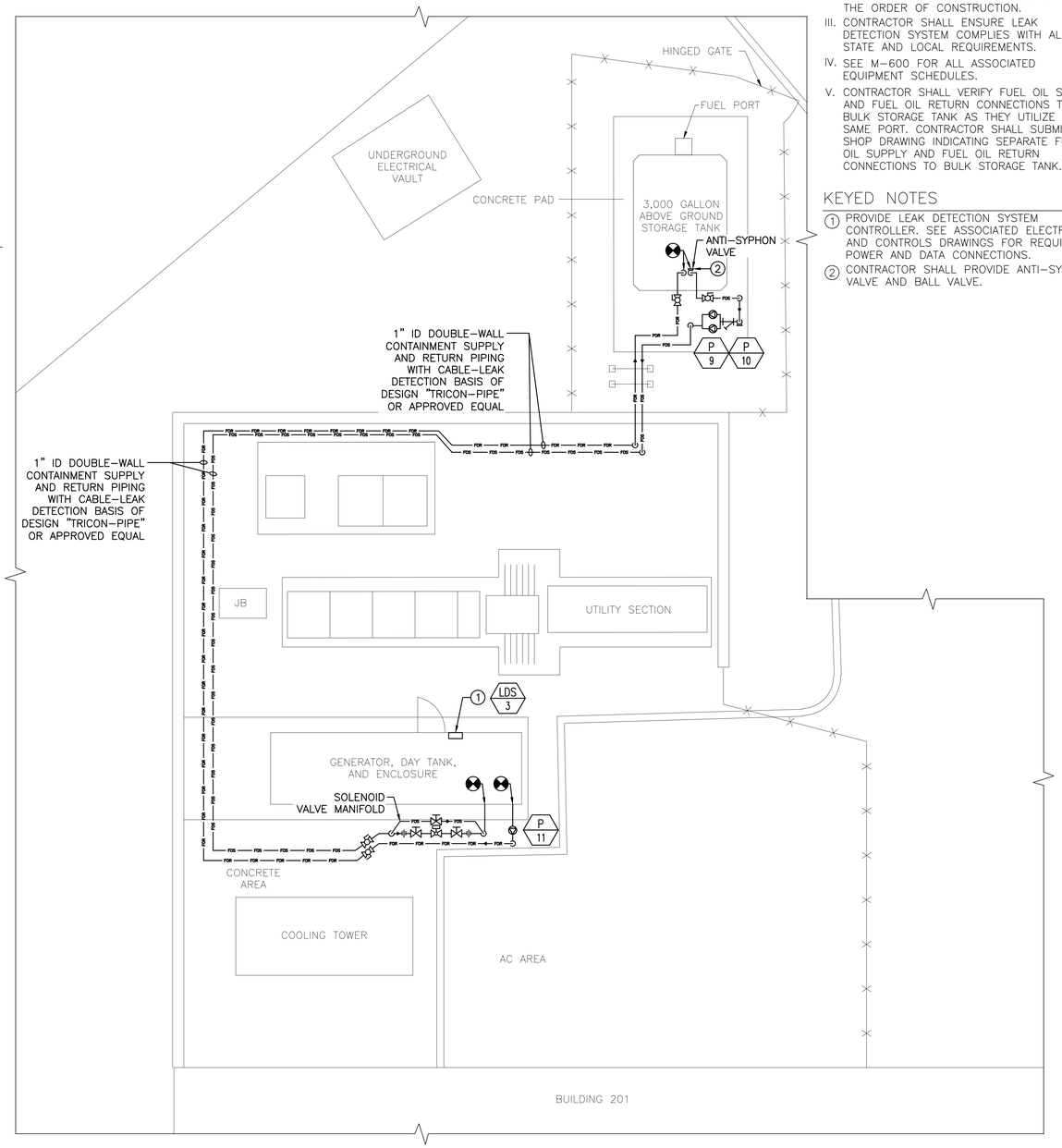

N

2 MP–108

MARE ISLAND MECHANICAL NEW WORK PLAN

SCALE: 1/4"=1'–0"

0 3 6 9 12 FT

Revisions:	Date:

CONSULTANT

ARCHITECT/ENGINEER OF RECORD

NEI Northeast Infrastructure, LLC
34 BROWN STREET
HONESDALE, PA 18431
OFFICE : (570) 253-0846
WWW.NEINFRA.COM

STAMP

Office of Construction and Facilities Management

VA U.S. Department of Veterans Affairs

Drawing Title: MARE ISLAND MECHANICAL PLANS	Phase: BID DOCUMENTS
Approved: Project Director: VA SIERRA PACIFIC NETWORK (VISN 21) VA NORTHERN CALIFORNIA HEALTHCARE SYSTEM	
Project Title: CORRECT MARTINEZ & MARE ISLAND GENERATOR FUEL LINES	Project Number: 612-23-005
Location: 150 MUIR ROAD MARTINEZ, CA 94553 / 201 WALNUT AVENUE MARE ISLAND, CA 94592	Building Number: 201
Issue Date: 04/17/2026	Checked: D.L.E. / Drawn: J.R.H.
	Drawing Number: MP-108

File Path: 6/14/2009 12:39:03 PM

VA FORM 08 - 6231

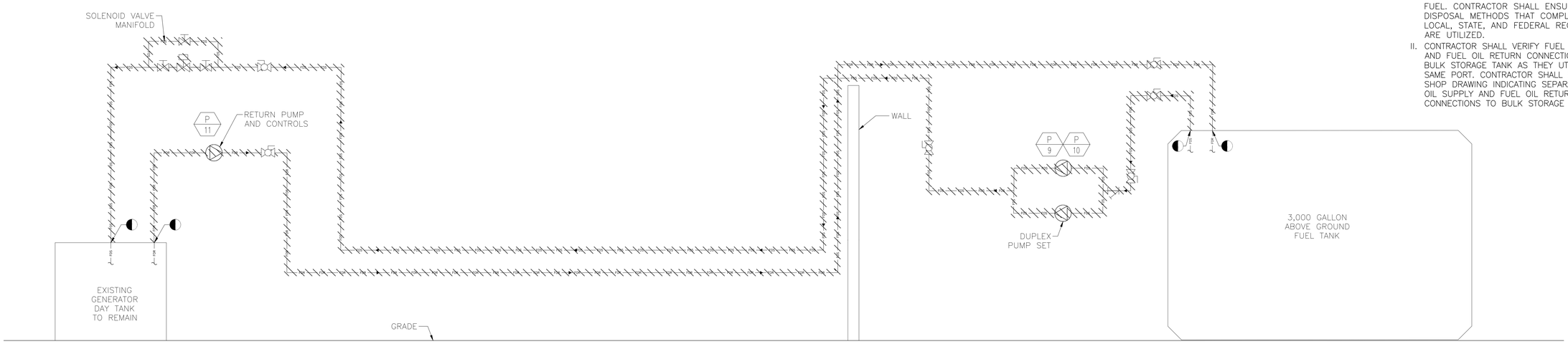

GENERAL DEMOLITION NOTES

I. CONTRACTOR SHALL HAUL AWAY EXISTING MATERIAL THAT HAS BEEN REMOVED FROM THE SYSTEM AND DISPOSE OF UNUSED FUEL. CONTRACTOR SHALL ENSURE THAT DISPOSAL METHODS THAT COMPLY WITH LOCAL, STATE, AND FEDERAL REGULATIONS ARE UTILIZED.

II. CONTRACTOR SHALL VERIFY FUEL OIL SUPPLY AND FUEL OIL RETURN CONNECTIONS TO BULK STORAGE TANK AS THEY UTILIZE THE SAME PORT. CONTRACTOR SHALL SUBMIT SHOP DRAWING INDICATING SEPARATE FUEL OIL SUPPLY AND FUEL OIL RETURN CONNECTIONS TO BULK STORAGE TANK.

1 / MP-109

MARE ISLAND
MECHANICAL DEMOLITION SCHEMATIC

SCALE:NO SCALE

NOTE: DRAWING IS GENERALLY DIAGRAMATIC REPRESENTING A SCHEMATIC DETAIL OF PROPER CONNECTION FROM FUEL OIL TANKS TO ASSOCIATED EQUIPMENT. FOR EXACT PIPE ROUTING AND EQUIPMENT PLACEMENT SEE MECHANICAL NEW WORK PLANS.

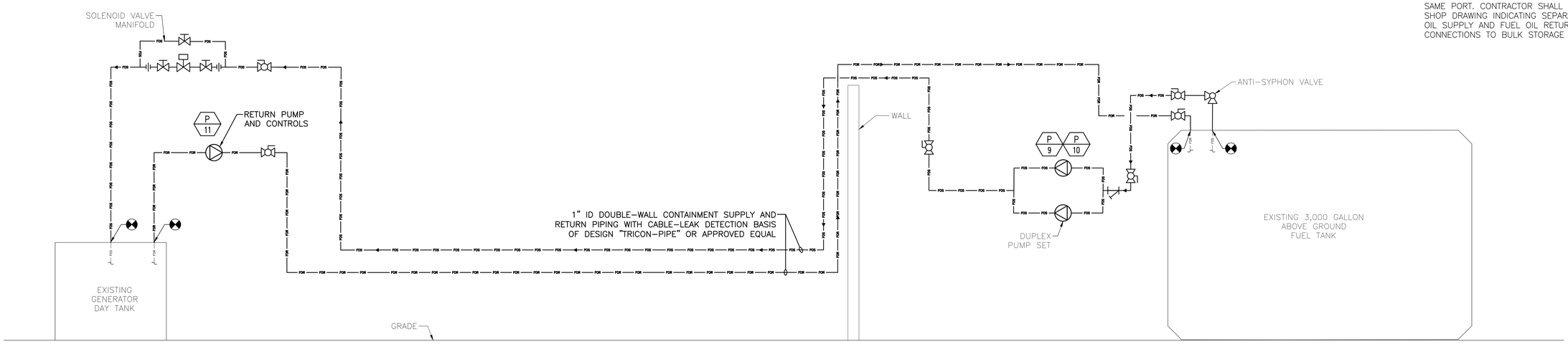

GENERAL NOTE

I. CONTRACTOR SHALL VERIFY FUEL OIL SUPPLY AND FUEL OIL RETURN CONNECTIONS TO BULK STORAGE TANK AS THEY UTILIZE THE SAME PORT. CONTRACTOR SHALL SUBMIT SHOP DRAWING INDICATING SEPARATE FUEL OIL SUPPLY AND FUEL OIL RETURN CONNECTIONS TO BULK STORAGE TANK.

2 / MP-109

MARE ISLAND
MECHANICAL NEW WORK SCHEMATIC

SCALE:NO SCALE

NOTE: DRAWING IS GENERALLY DIAGRAMATIC REPRESENTING A SCHEMATIC DETAIL OF PROPER CONNECTION FROM FUEL OIL TANKS TO ASSOCIATED EQUIPMENT. FOR EXACT PIPE ROUTING AND EQUIPMENT PLACEMENT SEE MECHANICAL NEW WORK PLANS.

Revisions:	Date:

CONSULTANT

ARCHITECT/ENGINEER OF RECORD

NEI Northeast Infrastructure, LLC
34 BROWN STREET
HONESDALE, PA 18431
OFFICE : (570) 253-0846
WWW.NEINFRA.COM

STAMP

REGISTERED PROFESSIONAL ENGINEER No. PE045119

Office of Construction and Facilities Management

VA U.S. Department of Veterans Affairs

Drawing Title: MARE ISLAND MECHANICAL SCHEMATICS	Phase: BID DOCUMENTS
Approved: Project Director: VA SIERRA PACIFIC NETWORK (VISN 21) VA NORTHERN CALIFORNIA HEALTHCARE SYSTEM	

Project Title: CORRECT MARTINEZ & MARE ISLAND GENERATOR FUEL LINES		Project Number: 612-23-005
		Building Number: 201
Location: 150 MUIR ROAD MARTINEZ, CA 94553 / 201 WALNUT AVENUE MARE ISLAND, CA 94592		Drawing Number: MP-109
Issue Date: 04/17/2026	Checked: D.L.E.	Drawn: F.R.O.

6/14/2009 12:39:03 PM

File Path:

VA FORM 08 - 6231

SEQUENCE OF OPERATIONS SUPPLY CONTROL VALVE

A. GENERAL

A.1. CONTRACTOR SHALL INTEGRATE FUEL SUPPLY CONTROL VALVE INTO EXISTING BUILDING MANAGEMENT SYSTEM.

A.2. UPON ENERGIZING OF THE FUEL OIL SUPPLY PUMPS, CONTROL VALVE SHALL OPEN.

A.3. UPON DE–ENERGIZATION OF THE FUEL OIL SUPPLY PUMPS, CONTROL VALVE SHALL CLOSE.

A.4. FUEL OIL SUPPLY PUMPS ENERGIZE AND DE–ENERGIZE WHEN THE EMERGENCY GENERATOR RUNS AND WHEN THE DAY TANK LEVEL INDICATOR SHOWS THAT THE DAY TANK REQUIRES ADDITIONAL FUEL FROM THE BULK STORAGE TANK.

SEQUENCE OF OPERATIONS FUEL OIL RETURN PUMP

A. GENERAL

A.1. CONTRACTOR SHALL INTEGRATE FUEL RETURN PUMP INTO EXISTING BUILDING MANAGEMENT SYSTEM.

A.2. FUEL OIL RETURN PUMP SHALL ENERGIZE IF EXCESS FUEL IS RETURNED FROM THE EMERGENCY GENERATOR BACK INTO THE DAY TANK AND THE DAY TANK LEVEL INDICATES MAXIMUM CAPACITY.

A.3. FUEL OIL RETURN PUMP SHALL BE ENERGIZED IN AN EMERGENCY SITUATION SUCH AS A DETECTED DAY TANK LEAK. THIS WILL ALLOW FUEL TO BE EVACUATED FROM THE DAY TANK BACK TO THE BULK STORAGE TANK.

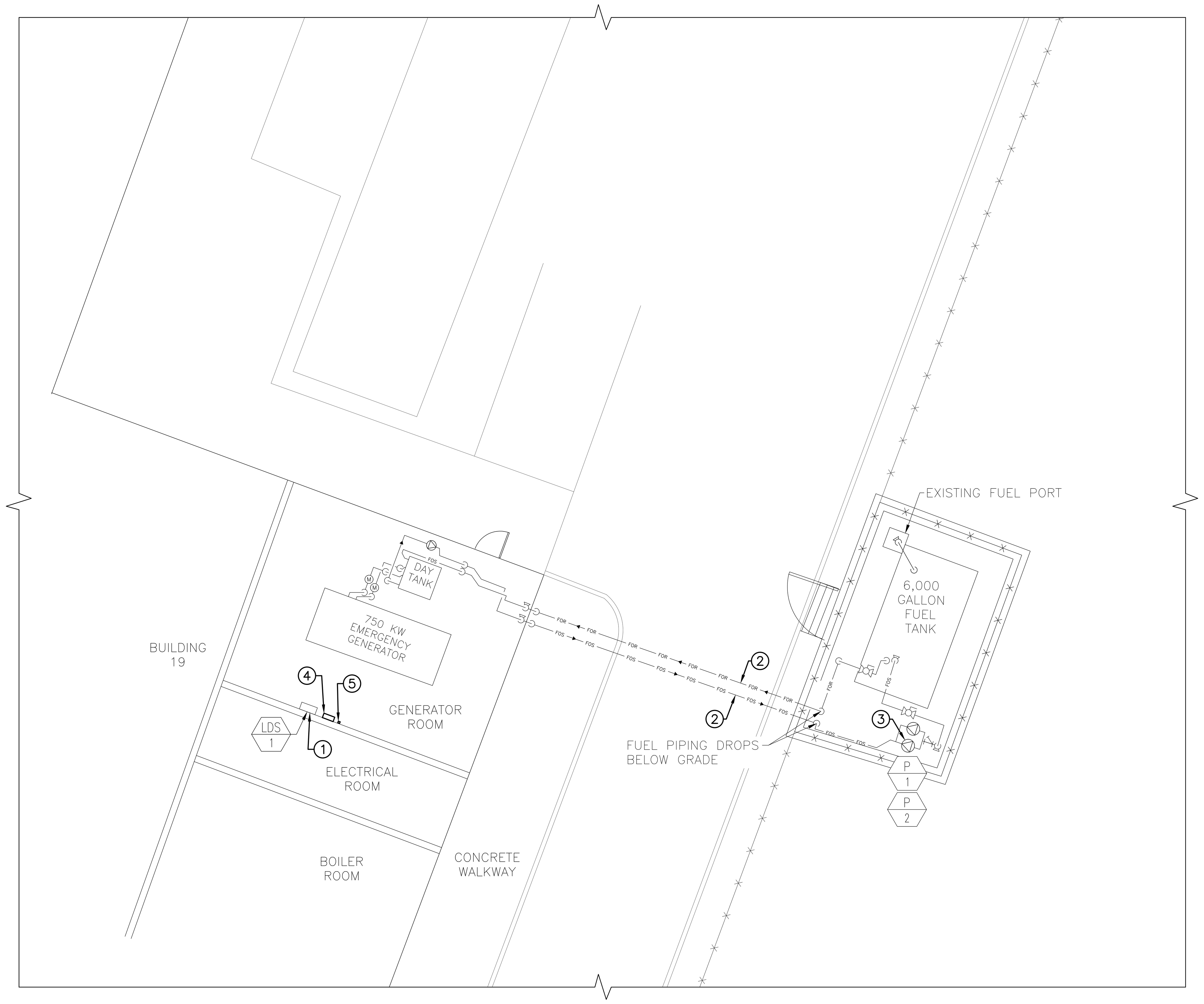

N

1 MI–100 MARTINEZ BUILDING 19 CONTROLS NEW WORK PLAN

SCALE: 1/8"=1'–0"

0 6 12 18 24 FT

JOB: 612–23–005
BUILDING: MARTINEZ BUILDING 19 POINTS LIST

SYSTEM: EMERGENCY GENERATOR FUEL SYSTEM

			POINT LEGEND		SYSTEM OUTPUTS: BINARY				SYSTEM OUTPUTS: ANALOG			SYSTEM INPUTS: BINARY							SYSTEM INPUTS: ANALOG									SYSTEM SOFTWARE/CONTROL: ALARM PROCESSING							SYSTEM SOFTWARE/CONTROL: APPLICATION/FUNCTION																PAGE:
SYSTEM COMPONENT:	POINT ID	ABBREVIATION	PRIORITY/ADD–ALTERNATE NO.	—	ELECTRIC DEVICE	START/STOP	OPEN/CLOSE	—	SPEED COMMAND	VALVE POSITION	DAMPER POSITION	STATUS	ALARM	HIGH PRESSURE	HIGH HUMIDITY	HIGH STATIC PRESSURE	LOW TEMPERATURE	—	TEMPERATURE (TI)	PRESSURE	POSITION	FLOW	PERCENT	STATIC PRESSURE	CARBON MONOXIDE	HUMIDITY	VACUUM	Local Alarm Panel	Area Alarm Panel	Master Alarm Panel	HIGH LIMIT	LOW LIMIT	—	—	SCHEDULE START/STOP	FUNCTION	DUTY CYCLE	TEMPERATURE ECONOMIZER	ENTHALPY ECONOMIZER	TEMPERATURE RESET	DEMAND LIMITING	TEMPERATURE OVERRIDE	STATIC PRESSURE RESET	PUMP CONTROL	LEAK IDENTIFICATION	PRESSURE/VOLUME CONTROL	FAILURE MODE	SPACE TEMP. CONTROL	FULL COMMUNICATION	TRENDING	REMARKS
SOLENOID VALVE MANIFOLD – SUPPLY CONTROL VALVE MODULATION	AO–1									●		●																																●							
B19 LEAK DETECTOR – DAY TANK RUPTURE BASIN	BO–1				●								●																	●															●						
B19 LEVEL PROBE – MAIN TANK HIGH	AI–1												●									●								●	●																			●	
B19 LEVEL PROBE – MAIN TANK LOW	AI–2												●									●										●																		●	
B19 LEVEL PROBE – DAY TANK HIGH	AI–3												●									●								●	●													●							
B19 LEVEL PROBE – DAY TANK LOW	AI–4												●									●										●												●							
B19 LEAK DETECTOR – TANK INTERSTITIAL	BO–2				●								●																	●															●						
B19 LEAK DETECTOR – SUPPLY PUMP BOX	BO–3				●								●																	●															●						
B19 LEAK DETECTOR – SUPPLY LINE	BO–4				●								●																	●															●						
B19 LEAK DETECTOR – RETURN LINE	BO–5				●								●																	●															●						
B19 P–1 – RUN STATUS	BI–1											●	●																																					●	
B19 P–1 – START/STOP	BO–6					●							●																															●							
B19 P–2 – START/STOP	BO–7					●							●																															●							
B19 P–2 – RUN STATUS	BI–2											●	●																																					●	
B19 DAY TANK RETURN PUMP – RUN STATUS	BI–3											●	●																																					●	
B19 DAY TANK RETURN PUMP – START/STOP	BO–8					●							●																															●							
B19 SUPPLY PUMPS – STRAINER HIGH DIFFERENTIAL	BI–4													●																●																●					

N

2 MI–100 MARTINEZ BUILDING 19 FUEL SYSTEM POINTS LIST

SCALE: 1/8"=1'–0"

GENERAL NOTES

I. CONTRACTOR MUST COORDINATE ANY CHANGES/ADDITIONS TO THE BUILDING MANAGEMENT SYSTEM WITH THE EXISTING BUILDING MANAGEMENT MANUFACTURER, JOHNSON CONTROLS, TO ENSURE PROPER CONNECTIONS CAN BE ACHIEVED WITH ALL EQUIPMENT.

JOHNSON CONTROLS CONTACT: NICK FIORITO, EMAIL: NICHOLAS.FIORITO@JCI.COM , PHONE: (916) 932–3884

II. PROVIDE CONDUIT AND CABLING FROM ALL ALL ALARMS, INDICATORS, AND CONTROLS TO THE EXISTING BUILDING MANAGEMENT SYSTEM IN ACCORDANCE WITH PROJECT SPECIFICATIONS.

III. SEE ASSOCIATED CONTROLS ONE LINE DIAGRAMS FOR SCHEMATIC CONFIGURATION OF ALL SENSORS AND THEIR ASSOCIATED INTERFACE MODULES.

IV. CONTRACTOR MUST COORDINATE ALL EQUIPMENT LOCATIONS WITH THE COR AND PROVIDE COORDINATION SHOP DRAWINGS INDICATING ALL LOCATIONS FOR INTENDED EQUIPMENT INSTALLATION PRIOR TO BEGINNING WORK.

KEYED NOTES

1. INTEGRATE LEAK DETECTION SYSTEM CONTROLLER INTO EXISTING JOHNSON CONTROLS METASYS BUILDING MANAGEMENT SYSTEM.
2. PROVIDE PIPE TRACE CONTINUOUS SENSING CABLE–LEAK DETECTION WITHIN ALL DOUBLE WALLED CONTAINMENT PIPING. INTEGRATE TO ASSOCIATED LEAK DETECTION SYSTEM CONTROLLER.
3. LEAD AND LAG FUEL PUMPS SHALL BE INTEGRATED INTO EXISTING DAY TANK LEVEL CONTROLLER. PUMPS SHALL START WHEN DAY TANK LEVEL CONTROLLER INDICATES PUMP START LEVEL STATUS. PUMPS SHALL SHUT OFF WHEN DAY TANK INDICATES NORMAL MAX LEVEL STATUS. LEAD AND LAG PUMP SHALL BE PROGRAMMED TO ALTERNATE WEEKLY.
4. PROVIDE CONTROL PANEL ASSEMBLY BASIS OF DESIGN "JOHNSON CONTROLS M4–CGE/XPM STANDARD CONTROL PANEL ASSEMBLY" OR APPROVED EQUAL.
5. PROVIDE LINE LEAK DETECTION SENSOR INTERFACE MODULE BASIS OF DESIGN "NVENT TRACETEK TTSIM–2–120" OR APPROVED EQUAL.

SEQUENCE OF OPERATIONS B19

A. GENERAL

A.1. CONTRACTOR SHALL INTEGRATE LEAK DETECTION AND PUMP CONTROLS INTO EXISTING BUILDING MANAGEMENT SYSTEM.

A.2. UPON STARTING OF THE EMERGENCY GENERATOR, FUEL SHALL TRANSFER FROM THE DAY TANK TO THE GENERATOR AS REQUIRED TO SUSTAIN OPERATION WITHOUT INTERRUPTIONS.

A.3. THE DAY TANK LOW FUEL LEVEL SHALL INDICATE TO THE BUILDING MANAGEMENT SYSTEM TO PROVIDE POWER TO SUPPLY PUMPS AT THE EXTERNAL FUEL STORAGE CONTAINER.

A.4. THE SUPPLY PUMPS SHALL RUN IN A LEAD LAG CONFIGURATION DEPENDING ON THE SUPPLY DEMAND BY THE SYSTEM.

A.5. THE PUMP SUPPLY BOX SHALL INCLUDE A LEAK DETECTION SYSTEM THAT SHALL TRIGGER AN ALARM IN THE BUILDING MANAGEMENT SYSTEM UPON DETECTION OF ANY LEAKS.

A.6. FUEL OIL PIPING CARRYING FUEL FROM THE EXTERNAL STORAGE TANK TO THE GENERATOR DAY TANK SHALL BE EQUIPPED WITH LEAK DETECTION AND A LEAK DETECTION SUMP FLOAT SWITCH WHICH WILL TRIGGER AN ALARM IN THE BUILDING MANAGEMENT SYSTEM UPON THE DETECTION OF A LEAK.

A.7. AFTER THE EMERGENCY GENERATOR IS DE–ENERGIZED, THE SUPPLY PUMPS WILL CONTINUE TO SUPPLY FUEL TO THE GENERATOR DAY TANK UNTIL THE APPROPRIATE FUEL LEVEL IS REACHED, UPON WHICH THE SUPPLY PUMPS WILL DE–ENERGIZE.

6/14/2009 12:39:03 PM

Revisions: Date:

CONSULTANT

ARCHITECT/ENGINEER OF RECORD

NEI Northeast Infrastructure, LLC
34 BROWN STREET
HONESDALE, PA 18431
OFFICE : (570) 253-0846
WWW.NEINFRA.COM

STAMP

Office of Construction and Facilities Management

VA U.S. Department of Veterans Affairs

Drawing Title	Phase	Project Title	Project Number
MARTINEZ BUILDING 19 CONTROLS NEW WORK PLAN	BID DOCUMENTS	CORRECT MARTINEZ & MARE ISLAND GENERATOR FUEL LINES	612-23-005
Approved: Project Director: VA SIERRA PACIFIC NETWORK (VISN 21) VA NORTHERN CALIFORNIA HEALTHCARE SYSTEM		Location: 150 MUIR ROAD MARTINEZ, CA 94553; 201 WALNUT AVENUE MARE ISLAND, CA 94592	Building Number: 19
		Issue Date: 04/17/2026; Checked: D.L.E.; Drawn: J.R.H.	Drawing Number: MI-100

File Path

VA FORM 08 - 6231

SEQUENCE OF OPERATIONS SUPPLY CONTROL VALVE

A. GENERAL

A.1. CONTRACTOR SHALL INTEGRATE FUEL SUPPLY CONTROL VALVE INTO EXISTING BUILDING MANAGEMENT SYSTEM.

A.2. UPON ENERGIZING OF THE FUEL OIL SUPPLY PUMPS, CONTROL VALVE SHALL OPEN.

A.3. UPON DE–ENERGIZATION OF THE FUEL OIL SUPPLY PUMPS, CONTROL VALVE SHALL CLOSE.

A.4. FUEL OIL SUPPLY PUMPS ENERGIZE AND DE–ENERGIZE WHEN THE EMERGENCY GENERATOR RUNS AND WHEN THE DAY TANK LEVEL INDICATOR SHOWS THAT THE DAY TANK REQUIRES ADDITIONAL FUEL FROM THE BULK STORAGE TANK.

SEQUENCE OF OPERATIONS FUEL OIL RETURN PUMP

A. GENERAL

A.1. CONTRACTOR SHALL INTEGRATE FUEL RETURN PUMP INTO EXISTING BUILDING MANAGEMENT SYSTEM.

A.2. FUEL OIL RETURN PUMP SHALL ENERGIZE IF EXCESS FUEL IS RETURNED FROM THE EMERGENCY GENERATOR BACK INTO THE DAY TANK AND THE DAY TANK LEVEL INDICATES MAXIMUM CAPACITY.

A.3. FUEL OIL RETURN PUMP SHALL BE ENERGIZED IN AN EMERGENCY SITUATION SUCH AS A DETECTED DAY TANK LEAK. THIS WILL ALLOW FUEL TO BE EVACUATED FROM THE DAY TANK BACK TO THE BULK STORAGE TANK.

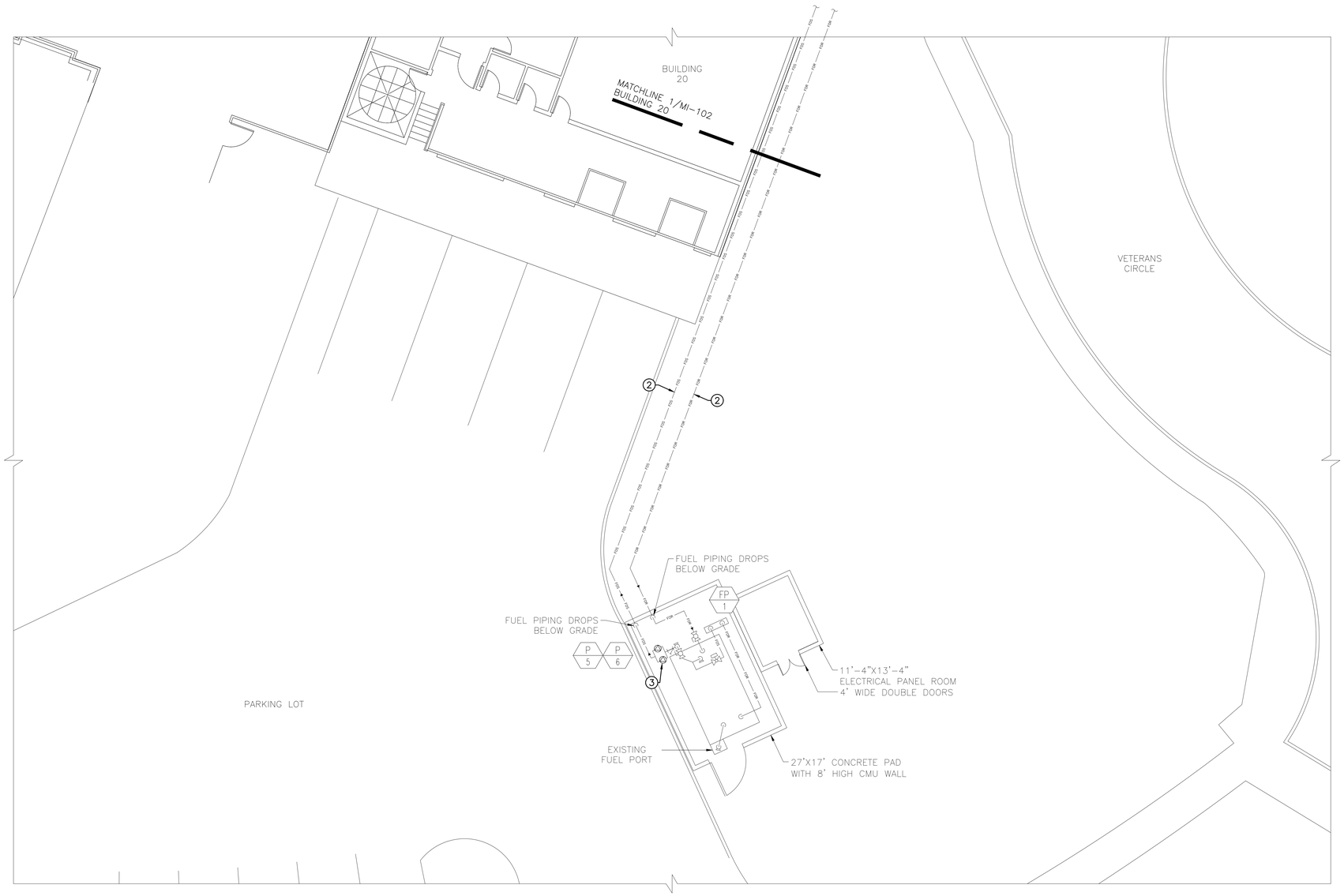

N

1
MI–101

MARTINEZ BUILDING 20 CONTROLS NEW WORK PLAN 1

SCALE: 1/8"=1'–0"

0 6 12 18 24 FT

GENERAL NOTES

I. CONTRACTOR MUST COORDINATE ANY CHANGED/ADDITIONS TO THE BUILDING MANAGEMENT SYSTEM WITH THE EXISTING BUILDING MANAGEMENT MANUFACTURER, JOHNSON CONTROLS, TO ENSURE PROPER CONNECTIONS CAN BE ACHIEVED WITH ALL EQUIPMENT.

JOHNSON CONTROLS CONTACT: NICK FIORITO, EMAIL: NICHOLAS.FIORITO@JCI.COM , PHONE: (916) 932–3884

II. PROVIDE CONDUIT AND CABLING FROM ALL ALL ALARMS, INDICATORS, AND CONTROLS TO THE EXISTING BUILDING MANAGEMENT SYSTEM IN ACCORDANCE WITH PROJECT SPECIFICATIONS.

III. CONTRACTOR MUST COORDINATE ALL EQUIPMENT LOCATIONS WITH THE COR AND PROVIDE COORDINATION SHOP DRAWINGS INDICATING ALL LOCATIONS FOR INTENDED EQUIPMENT INSTALLATION PRIOR TO BEGINNING WORK.

KEYED NOTES

(1) NOTE NOT APPLICABLE.

(2) PROVIDE PIPE TRACE CONTINUOUS SENSING CABLE–LEAK DETECTION WITHIN ALL DOUBLE WALLED CONTAINMENT PIPING. INTEGRATE TO ASSOCIATED LEAK DETECTION SYSTEM CONTROLLER.

(3) LEAD AND LAG FUEL PUMPS SHALL BE INTEGRATED INTO EXISTING DAY TANK LEVEL CONTROLLER. PUMPS SHALL START WHEN DAY TANK LEVEL CONTROLLER INDICATES PUMP START LEVEL STATUS. PUMPS SHALL SHUT OFF WHEN DAY TANK INDICATES NORMAL MAX LEVEL STATUS. LEAD AND LAG PUMP SHALL BE PROGRAMMED TO ALTERNATE WEEKLY.

SEQUENCE OF OPERATIONS B20

A. GENERAL

A.1. CONTRACTOR SHALL INTEGRATE LEAK DETECTION AND PUMP CONTROLS INTO EXISTING BUILDING MANAGEMENT SYSTEM.

A.2. UPON STARTING OF THE EMERGENCY GENERATOR, FUEL SHALL TRANSFER FROM THE DAY TANK TO THE GENERATOR AS REQUIRED TO SUSTAIN OPERATION WITHOUT INTERRUPTIONS.

A.3. THE DAY TANK LOW FUEL LEVEL SHALL INDICATE TO THE BUILDING MANAGEMENT SYSTEM TO PROVIDE POWER TO SUPPLY PUMPS AT THE EXTERNAL FUEL STORAGE CONTAINER.

A.4. THE SUPPLY PUMPS SHALL RUN IN A LEAD LAG CONFIGURATION DEPENDING ON THE SUPPLY DEMAND BY THE SYSTEM.

A.5. THE PUMP SUPPLY BOX SHALL INCLUDE A LEAK DETECTION SYSTEM THAT SHALL TRIGGER AN ALARM IN THE BUILDING MANAGEMENT SYSTEM UPON DETECTION OF ANY LEAKS.

A.6. FUEL OIL PIPING CARRYING FUEL FROM THE EXTERNAL STORAGE TANK TO THE GENERATOR DAY TANK SHALL BE EQUIPPED WITH LEAK DETECTION AND A LEAK DETECTION SUMP FLOAT SWITCH WHICH WILL TRIGGER AN ALARM IN THE BUILDING MANAGEMENT SYSTEM UPON THE DETECTION OF A LEAK.

A.7. AFTER THE EMERGENCY GENERATOR IS DE–ENERGIZED, THE SUPPLY PUMPS WILL CONTINUE TO SUPPLY FUEL TO THE GENERATOR DAY TANK UNTIL THE APPROPRIATE FUEL LEVEL IS REACHED, UPON WHICH THE SUPPLY PUMPS WILL DE–ENERGIZE.

A.8. FUEL POLISHING SYSTEM SHALL RUN INTERMITTENTLY BASED ON A SCHEDULE SET WITHIN THE BUILDING MANAGEMENT SYSTEM OR WHEN CONTAMINANTS ARE DETECTED WITHIN THE EXTERNAL STORAGE TANK. FUEL WILL BE FILTERED AND THEN RETURNED TO THE EXTERNAL STORAGE TANK. WHEN FUEL POLISHING SYSTEM IS POWERED ON, THE ASSOCIATED FUEL POLISHING SUPPLY CONTROL VALVE WILL OPEN. IF THE MAIN DUPLEX SUPPLY PUMPS TURN ON, THE FUEL POLISHING SYSTEM WILL POWER OFF AND THE ASSOCIATED FUEL POLISHING SUPPLY CONTROL VALVE WILL CLOSE.

Revisions:	Date:

CONSULTANT

ARCHITECT/ENGINEER OF RECORD

NEI Northeast Infrastructure, LLC
34 BROWN STREET
HONESDALE, PA 18431
OFFICE : (570) 253-0846
WWW.NEINFRA.COM

STAMP

Office of Construction and Facilities Management

VA U.S. Department of Veterans Affairs

Drawing Title: MARTINEZ BUILDING 20 CONTROLS NEW WORK PLAN 1

Phase: BID DOCUMENTS

Project Title: CORRECT MARTINEZ & MARE ISLAND GENERATOR FUEL LINES

Project Number: 612-23-005

Building Number: 20

Approved: Project Director: VA SIERRA PACIFIC NETWORK (VISN 21) VA NORTHERN CALIFORNIA HEALTHCARE SYSTEM

Location: 150 MUIR ROAD MARTINEZ, CA 94553 — 201 WALNUT AVENUE MARE ISLAND, CA 94592

Issue Date: 04/17/2026 | Checked: D.L.E. | Drawn: J.R.H.

Drawing Number: MI-101

File Path:

VA FORM 08 - 6231

6/14/2009 12:39:03 PM

SEQUENCE OF OPERATIONS SUPPLY CONTROL VALVE

A. GENERAL

A.1. CONTRACTOR SHALL INTEGRATE FUEL SUPPLY CONTROL VALVE INTO EXISTING BUILDING MANAGEMENT SYSTEM.

A.2. UPON ENERGIZING OF THE FUEL OIL SUPPLY PUMPS, CONTROL VALVE SHALL OPEN.

A.3. UPON DE-ENERGIZATION OF THE FUEL OIL SUPPLY PUMPS, CONTROL VALVE SHALL CLOSE.

A.4. FUEL OIL SUPPLY PUMPS ENERGIZE AND DE-ENERGIZE WHEN THE EMERGENCY GENERATOR RUNS AND WHEN THE DAY TANK LEVEL INDICATOR SHOWS THAT THE DAY TANK REQUIRES ADDITIONAL FUEL FROM THE BULK STORAGE TANK.

SEQUENCE OF OPERATIONS FUEL OIL RETURN PUMP

A. GENERAL

A.1. CONTRACTOR SHALL INTEGRATE FUEL RETURN PUMP INTO EXISTING BUILDING MANAGEMENT SYSTEM.

A.2. FUEL OIL RETURN PUMP SHALL ENERGIZE IF EXCESS FUEL IS RETURNED FROM THE EMERGENCY GENERATOR BACK INTO THE DAY TANK AND THE DAY TANK LEVEL INDICATES MAXIMUM CAPACITY.

A.3. FUEL OIL RETURN PUMP SHALL BE ENERGIZED IN AN EMERGENCY SITUATION SUCH AS A DETECTED DAY TANK LEAK. THIS WILL ALLOW FUEL TO BE EVACUATED FROM THE DAY TANK BACK TO THE BULK STORAGE TANK.

GENERAL NOTES

I. CONTRACTOR MUST COORDINATE ANY CHANGES/ADDITIONS TO THE BUILDING MANAGEMENT SYSTEM WITH THE EXISTING BUILDING MANAGEMENT MANUFACTURER, JOHNSON CONTROLS, TO ENSURE PROPER CONNECTIONS CAN BE ACHIEVED WITH ALL EQUIPMENT.

JOHNSON CONTROLS CONTACT: NICK FIORITO, EMAIL: NICHOLAS.FIORITO@JCI.COM , PHONE: (916) 932-3884

II. PROVIDE CONDUIT AND CABLING FROM ALL ALL ALARMS, INDICATORS, AND CONTROLS TO THE EXISTING BUILDING MANAGEMENT SYSTEM IN ACCORDANCE WITH PROJECT SPECIFICATIONS.

III. SEE ASSOCIATED CONTROLS ONE LINE DIAGRAMS FOR SCHEMATIC CONFIGURATION OF ALL SENSORS AND THEIR ASSOCIATED INTERFACE MODULES.

IV. CONTRACTOR MUST COORDINATE ALL EQUIPMENT LOCATIONS WITH THE COR AND PROVIDE COORDINATION SHOP DRAWINGS INDICATING ALL LOCATIONS FOR INTENDED EQUIPMENT INSTALLATION PRIOR TO BEGINNING WORK.

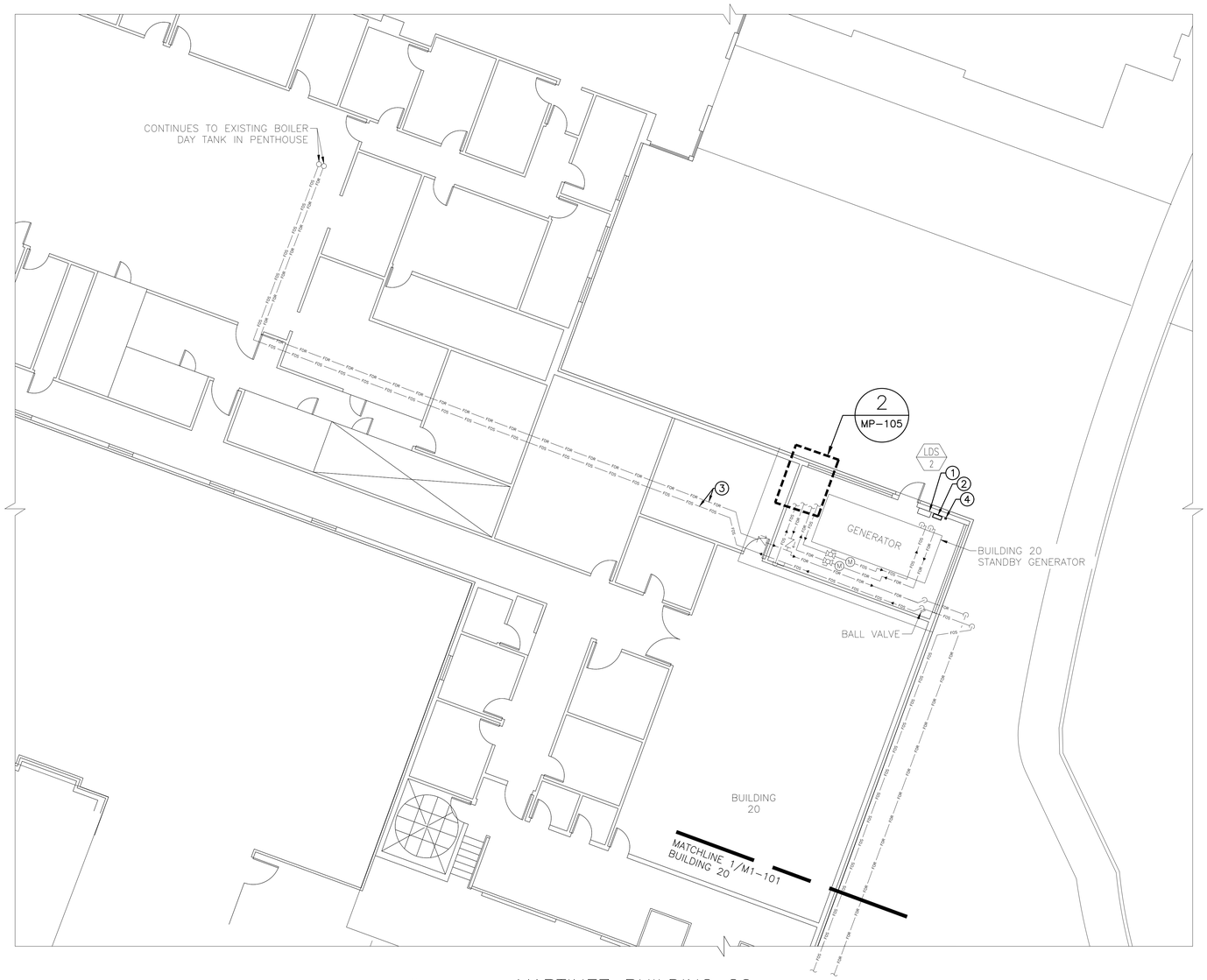

N 1 MI-102

MARTINEZ BUILDING 20
CONTROLS NEW WORK PLAN 2

SCALE: 1/8"=1'-0"

0 6 12 18 24 FT

KEYED NOTES

1. INTEGRATE LEAK DETECTION SYSTEM CONTROLLER INTO EXISTING JOHNSON CONTROLS METASYS BUILDING MANAGEMENT SYSTEM.
2. PROVIDE CONTROL PANEL ASSEMBLY BASIS OF DESIGN "JOHNSON CONTROLS M4-CGE/XPM STANDARD CONTROL PANEL ASSEMBLY" OR APPROVED EQUAL.
3. PROVIDE PIPE TRACE CONTINUOUS SENSING CABLE-LEAK DETECTION WITHIN ALL DOUBLE WALLED CONTAINMENT PIPING. INTEGRATE TO ASSOCIATED LEAK DETECTION SYSTEM CONTROLLER.
4. PROVIDE LINE LEAK DETECTION SENSOR INTERFACE MODULE BASIS OF DESIGN "NVENT TRACETEK TTSIM-2-120" OR APPROVED EQUAL.

SEQUENCE OF OPERATIONS B20

A. GENERAL

A.1. CONTRACTOR SHALL INTEGRATE LEAK DETECTION AND PUMP CONTROLS INTO EXISTING BUILDING MANAGEMENT SYSTEM.

A.2. UPON STARTING OF THE EMERGENCY GENERATOR, FUEL SHALL TRANSFER FROM THE DAY TANK TO THE GENERATOR AS REQUIRED TO SUSTAIN OPERATION WITHOUT INTERRUPTIONS.

A.3. THE DAY TANK LOW FUEL LEVEL SHALL INDICATE TO THE BUILDING MANAGEMENT SYSTEM TO PROVIDE POWER TO SUPPLY PUMPS AT THE EXTERNAL FUEL STORAGE CONTAINER.

A.4. THE SUPPLY PUMPS SHALL RUN IN A LEAD LAG CONFIGURATION DEPENDING ON THE SUPPLY DEMAND BY THE SYSTEM.

A.5. THE PUMP SUPPLY BOX SHALL INCLUDE A LEAK DETECTION SYSTEM THAT SHALL TRIGGER AN ALARM IN THE BUILDING MANAGEMENT SYSTEM UPON DETECTION OF ANY LEAKS.

A.6. FUEL OIL PIPING CARRYING FUEL FROM THE EXTERNAL STORAGE TANK TO THE GENERATOR DAY TANK SHALL BE EQUIPPED WITH LINE LEAK DETECTION AND A LEAK DETECTION SUMP FLOAT SWITCH WHICH WILL TRIGGER AN ALARM IN THE BUILDING MANAGEMENT SYSTEM UPON THE DETECTION OF A LEAK.

A.7. AFTER THE EMERGENCY GENERATOR IS DE-ENERGIZED, THE SUPPLY PUMPS WILL CONTINUE TO SUPPLY FUEL TO THE GENERATOR DAY TANK UNTIL THE APPROPRIATE FUEL LEVEL IS REACHED, UPON WHICH THE SUPPLY PUMPS WILL DE-ENERGIZE.

A.8. FUEL POLISHING SYSTEM SHALL RUN INTERMITTENTLY BASED ON A SCHEDULE SET WITHIN THE BUILDING MANAGEMENT SYSTEM OR WHEN CONTAMINANTS ARE DETECTED WITHIN THE EXTERNAL STORAGE TANK. FUEL WILL BE FILTERED AND THEN RETURNED TO THE EXTERNAL STORAGE TANK. WHEN FUEL POLISHING SYSTEM IS POWERED ON, THE ASSOCIATED FUEL POLISHING SUPPLY CONTROL VALVE WILL OPEN. IF THE MAIN DUPLEX SUPPLY PUMPS TURN ON, THE FUEL POLISHING SYSTEM WILL POWER OFF AND THE ASSOCIATED FUEL POLISHING SUPPLY CONTROL VALVE WILL CLOSE.

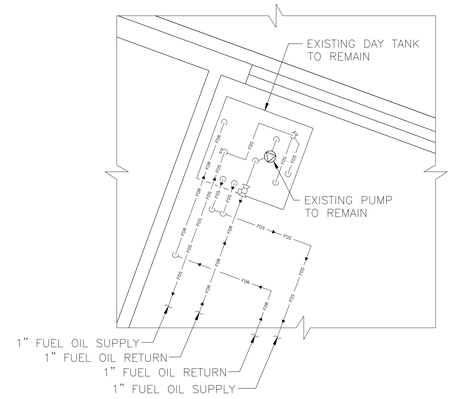

N 2 MI-102

MARTINEZ BUILDING 20
ENLARGED CONTROLS
NEW WORK PLAN

SCALE: 1/2"=1'-0"

0 2 4 6 FT

Revisions:	Date:

CONSULTANT

ARCHITECT/ENGINEER OF RECORD

NEI Northeast Infrastructure, LLC
34 BROWN STREET
HONESDALE, PA 18431
OFFICE : (570) 253-0846
WWW.NEINFRA.COM

STAMP

Office of Construction and Facilities Management

VA U.S. Department of Veterans Affairs

Drawing Title: MARTINEZ BUILDING 20 CONTROLS NEW WORK PLANS 2	Phase: BID DOCUMENTS
Approved: Project Director: VA SIERRA PACIFIC NETWORK (VISN 21) VA NORTHERN CALIFORNIA HEALTHCARE SYSTEM	
Project Title: CORRECT MARTINEZ & MARE ISLAND GENERATOR FUEL LINES	Project Number: 612-23-005
	Building Number: 20
Location: 150 MUIR ROAD MARTINEZ, CA 94553 / 201 WALNUT AVENUE MARE ISLAND, CA 94592	Drawing Number: MI-102
Issue Date: 04/17/2026	Checked: D.L.E. / Drawn: J.R.H.

6/14/2009 12:39:03 PM

File Path

VA FORM 08 - 6231

SEQUENCE OF OPERATIONS SUPPLY CONTROL VALVE

A. GENERAL

A.1. CONTRACTOR SHALL INTEGRATE FUEL SUPPLY CONTROL VALVE INTO EXISTING BUILDING MANAGEMENT SYSTEM.

A.2. UPON ENERGIZING OF THE FUEL OIL SUPPLY PUMPS, CONTROL VALVE SHALL OPEN.

A.3. UPON DE-ENERGIZATION OF THE FUEL OIL SUPPLY PUMPS, CONTROL VALVE SHALL CLOSE.

A.4. FUEL OIL SUPPLY PUMPS ENERGIZE AND DE-ENERGIZE WHEN THE EMERGENCY GENERATOR RUNS AND WHEN THE DAY TANK LEVEL INDICATOR SHOWS THAT THE DAY TANK REQUIRES ADDITIONAL FUEL FROM THE BULK STORAGE TANK.

SEQUENCE OF OPERATIONS FUEL OIL RETURN PUMP

A. GENERAL

A.1. CONTRACTOR SHALL INTEGRATE FUEL RETURN PUMP INTO EXISTING BUILDING MANAGEMENT SYSTEM.

A.2. FUEL OIL RETURN PUMP SHALL ENERGIZE IF EXCESS FUEL IS RETURNED FROM THE EMERGENCY GENERATOR BACK INTO THE DAY TANK AND THE DAY TANK LEVEL INDICATES MAXIMUM CAPACITY.

A.3. FUEL OIL RETURN PUMP SHALL BE ENERGIZED IN AN EMERGENCY SITUATION SUCH AS A DETECTED DAY TANK LEAK. THIS WILL ALLOW FUEL TO BE EVACUATED FROM THE DAY TANK BACK TO THE BULK STORAGE TANK.

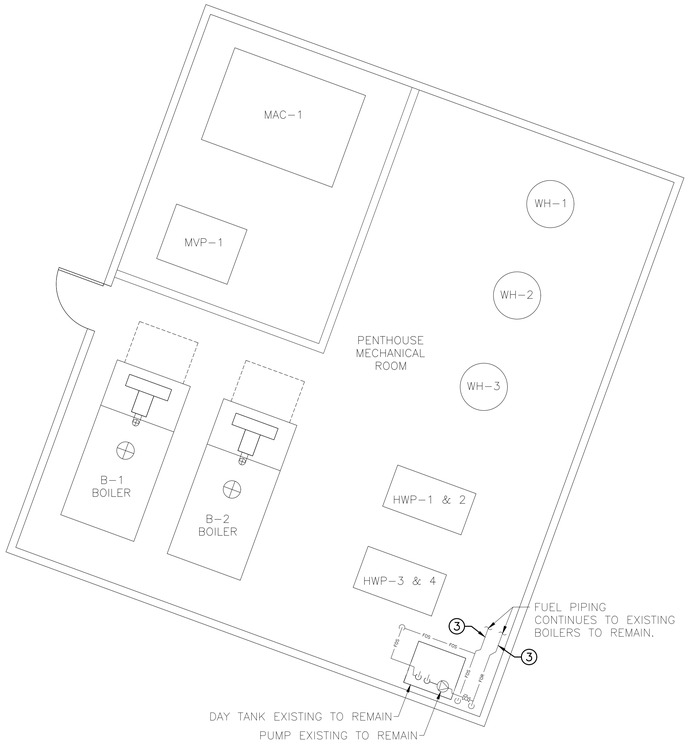

N

1 MI-103

MARTINEZ BUILDING 20 PENTHOUSE CONTROLS NEW WORK PLAN

SCALE: 1/4"=1'-0"

0 3 6 9 12 FT

JOB: 612-23-005
BUILDING: MARTINEZ BUILDING 20 POINTS LIST

PAGE:

SYSTEM: EMERGENCY GENERATOR FUEL SYSTEM

SYSTEM COMPONENT:	POINT ID	ABBREVIATION	POINT LEGEND: PROVIDED AND INSTALLED UNDER THIS CONTRACT	SYSTEM OUTPUTS: BINARY	SYSTEM OUTPUTS: ANALOG	SYSTEM INPUTS: BINARY	SYSTEM INPUTS: ANALOG	SYSTEM SOFTWARE/CONTROL: ALARM PROCESSING	SYSTEM SOFTWARE/CONTROL: APPLICATION/FUNCTION	REMARKS
SOLENOID VALVE MANIFOLD – SUPPLY CONTROL VALVE MODULATION – GENERATOR ROOM	AO-1			●	●					
B20 LEAK DETECTOR – DAY TANK RUPTURE BASIN – GENERATOR ROOM	BO-1		●		●			●	●	
B20 LEVEL PROBE – MAIN TANK HIGH	AI-1				●		●	●	●	
B20 LEVEL PROBE – MAIN TANK LOW	AI-2				●		●	●	●	
B20 LEVEL PROBE – DAY TANK HIGH – GENERATOR ROOM	AI-3				●		●	●	●	
B20 LEVEL PROBE – DAY TANK LOW – GENERATOR ROOM	AI-4				●		●	●	●	
B20 LEAK DETECTOR – TANK INTERSTITIAL	BO-2		●		●			●	●	
B20 LEAK DETECTOR – SUPPLY PUMP BOX	BO-3		●		●			●	●	
B20 LEAK DETECTOR – SUPPLY LINE	BO-4		●		●			●	●	
B20 LEAK DETECTOR – RETURN LINE	BO-5		●		●			●	●	
B20 P-1 – RUN STATUS	BI-1				●				●	
B20 P-1 – START/STOP	BO-6		●		●				●	
B20 P-2 – START/STOP	BO-7		●		●				●	
B20 P-2 – RUN STATUS	BI-2				●				●	
B20 DAY TANK RETURN PUMP – RUN STATUS – GENERATOR ROOM	BI-3				●				●	
B20 DAY TANK RETURN PUMP – START/STOP – GENERATOR ROOM	BO-8		●		●				●	
SOLENOID VALVE MANIFOLD – SUPPLY CONTROL VALVE MODULATION – PENTHOUSE	AO-2			●	●				●	
B20 LEAK DETECTOR – DAY TANK RUPTURE BASIN – PENTHOUSE	BO-9		●		●			●	●	
B20 LEVEL PROBE – DAY TANK HIGH – PENTHOUSE	AI-5				●		●	●	●	
B20 LEVEL PROBE – DAY TANK LOW – PENTHOUSE	AI-6				●		●		●	
B20 DAY TANK RETURN PUMP – RUN STATUS – PENTHOUSE	BI-4				●				●	
B20 DAY TANK RETURN PUMP – START/STOP – PENTHOUSE	BO-10		●		●				●	
B20 SUPPLY PUMPS – STRAINER HIGH DIFFERENTIAL	BI-5				●			●	●	
B20 FUEL POLISHER – CONTROL POWER ON	BI-11								●	
B20 FUEL POLISHER – PUMP RUN STATUS	BI-12				●				●	
B20 FUEL POLISHER – FILTER SATURATED	BI-13				●			●	●	
B20 FUEL POLISHER – FILTER WATER LEVEL HIGH	BI-14				●			●	●	
B20 FUEL POLISHER BOX – LEAK DETECTOR	BO-11		●		●			●	●	

N

2 MI-103

MARTINEZ BUILDING 20 FUEL SYSTEM POINTS LIST

SCALE: 1/8"=1'-0"

GENERAL NOTES

I. CONTRACTOR MUST COORDINATE ANY CHANGED/ADDITIONS TO THE BUILDING MANAGEMENT SYSTEM WITH THE EXISTING BUILDING MANAGEMENT MANUFACTURER, JOHNSON CONTROLS, TO ENSURE PROPER CONNECTIONS CAN BE ACHIEVED WITH ALL EQUIPMENT.

JOHNSON CONTROLS CONTACT: NICK FIORITO, EMAIL: NICHOLAS.FIORITO@JCI.COM , PHONE: (916) 932-3884

II. PROVIDE CONDUIT AND CABLING FROM ALL ALL ALARMS, INDICATORS, AND CONTROLS TO THE EXISTING BUILDING MANAGEMENT SYSTEM IN ACCORDANCE WITH PROJECT SPECIFICATIONS.

III. CONTRACTOR MUST COORDINATE ALL EQUIPMENT LOCATIONS WITH THE COR AND PROVIDE COORDINATION SHOP DRAWINGS INDICATING ALL LOCATIONS FOR INTENDED EQUIPMENT INSTALLATION PRIOR TO BEGINNING WORK.

KEYED NOTES

(1) NOTE NOT APPLICABLE.

(2) NOTE NOT APPLICABLE.

(3) PROVIDE PIPE TRACE CONTINUOUS SENSING CABLE-LEAK DETECTION WITHIN ALL DOUBLE WALLED CONTAINMENT PIPING. INTEGRATE TO ASSOCIATED LEAK DETECTION SYSTEM CONTROLLER.

(4) NOTE NOT APPLICABLE.

SEQUENCE OF OPERATIONS B20

A. GENERAL

A.1. CONTRACTOR SHALL INTEGRATE LEAK DETECTION AND PUMP CONTROLS INTO EXISTING BUILDING MANAGEMENT SYSTEM.

A.2. UPON STARTING OF THE EMERGENCY GENERATOR, FUEL SHALL TRANSFER FROM THE DAY TANK TO THE GENERATOR AS REQUIRED TO SUSTAIN OPERATION WITHOUT INTERRUPTIONS.

A.3. THE DAY TANK LOW FUEL LEVEL SHALL INDICATE TO THE BUILDING MANAGEMENT SYSTEM TO PROVIDE POWER TO SUPPLY PUMPS AT THE EXTERNAL FUEL STORAGE CONTAINER.

A.4. THE SUPPLY PUMPS SHALL RUN IN A LEAD LAG CONFIGURATION DEPENDING ON THE SUPPLY DEMAND BY THE SYSTEM.

A.5. THE PUMP SUPPLY BOX SHALL INCLUDE A LEAK DETECTION SYSTEM THAT SHALL TRIGGER AN ALARM IN THE BUILDING MANAGEMENT SYSTEM UPON DETECTION OF ANY LEAKS.

A.6. FUEL OIL PIPING CARRYING FUEL FROM THE EXTERNAL STORAGE TANK TO THE GENERATOR DAY TANK SHALL BE EQUIPPED WITH LEAK DETECTION AND A LEAK DETECTION SUMP FLOAT SWITCH WHICH WILL TRIGGER AN ALARM IN THE BUILDING MANAGEMENT SYSTEM UPON THE DETECTION OF A LEAK.

A.7. AFTER THE EMERGENCY GENERATOR IS DE-ENERGIZED, THE SUPPLY PUMPS WILL CONTINUE TO SUPPLY FUEL TO THE GENERATOR DAY TANK UNTIL THE APPROPRIATE FUEL LEVEL IS REACHED, UPON WHICH THE SUPPLY PUMPS WILL DE-ENERGIZE.

A.8. FUEL POLISHING SYSTEM SHALL RUN INTERMITTENTLY BASED ON A SCHEDULE SET WITHIN THE BUILDING MANAGEMENT SYSTEM OR WHEN CONTAMINANTS ARE DETECTED WITHIN THE EXTERNAL STORAGE TANK. FUEL WILL BE FILTERED AND THEN RETURNED TO THE EXTERNAL STORAGE TANK. WHEN FUEL POLISHING SYSTEM IS POWERED ON, THE ASSOCIATED FUEL POLISHING SUPPLY CONTROL VALVE WILL OPEN. IF THE MAIN DUPLEX SUPPLY PUMPS TURN ON, THE FUEL POLISHING SYSTEM WILL POWER OFF AND THE ASSOCIATED FUEL POLISHING SUPPLY CONTROL VALVE WILL CLOSE.

Revisions:	Date:

CONSULTANT

ARCHITECT/ENGINEER OF RECORD

NEI Northeast Infrastructure, LLC
34 BROWN STREET
HONESDALE, PA 18431
OFFICE : (570) 253-0846
WWW.NEINFRA.COM

STAMP

REGISTERED PROFESSIONAL ENGINEER
No. PE045114E

Office of Construction and Facilities Management

U.S. Department of Veterans Affairs

Drawing Title: MARTINEZ BUILDING 20 PENTHOUSE CONTROLS NEW WORK PLAN

Phase: BID DOCUMENTS

Project Title: CORRECT MARTINEZ & MARE ISLAND GENERATOR FUEL LINES

Project Number: 612-23-005

Building Number: 20

Approved: Project Director: VA SIERRA PACIFIC NETWORK (VISN 21) VA NORTHERN CALIFORNIA HEALTHCARE SYSTEM

Location: 150 MUIR ROAD MARTINEZ, CA 94553 — 201 WALNUT AVENUE MARE ISLAND, CA 94592

Issue Date: 04/17/2026

Checked: D.L.E.

Drawn: J.R.H.

Drawing Number: MI-103

6/14/2009 12:39:03 PM

File Path

VA FORM 08 - 6231

SEQUENCE OF OPERATIONS SUPPLY CONTROL VALVE

A. GENERAL

A.1. CONTRACTOR SHALL INTEGRATE FUEL SUPPLY CONTROL VALVE INTO EXISTING BUILDING MANAGEMENT SYSTEM.

A.2. UPON ENERGIZING OF THE FUEL OIL SUPPLY PUMPS, CONTROL VALVE SHALL OPEN.

A.3. UPON DE–ENERGIZATION OF THE FUEL OIL SUPPLY PUMPS, CONTROL VALVE SHALL CLOSE.

A.4. FUEL OIL SUPPLY PUMPS ENERGIZE AND DE–ENERGIZE WHEN THE EMERGENCY GENERATOR RUNS AND WHEN THE DAY TANK LEVEL INDICATOR SHOWS THAT THE DAY TANK REQUIRES ADDITIONAL FUEL FROM THE BULK STORAGE TANK.

SEQUENCE OF OPERATIONS FUEL OIL RETURN PUMP

A. GENERAL

A.1. CONTRACTOR SHALL INTEGRATE FUEL RETURN PUMP INTO EXISTING BUILDING MANAGEMENT SYSTEM.

A.2. FUEL OIL RETURN PUMP SHALL ENERGIZE IF EXCESS FUEL IS RETURNED FROM THE EMERGENCY GENERATOR BACK INTO THE DAY TANK AND THE DAY TANK LEVEL INDICATES MAXIMUM CAPACITY.

A.3. FUEL OIL RETURN PUMP SHALL BE ENERGIZED IN AN EMERGENCY SITUATION SUCH AS A DETECTED DAY TANK LEAK. THIS WILL ALLOW FUEL TO BE EVACUATED FROM THE DAY TANK BACK TO THE BULK STORAGE TANK.

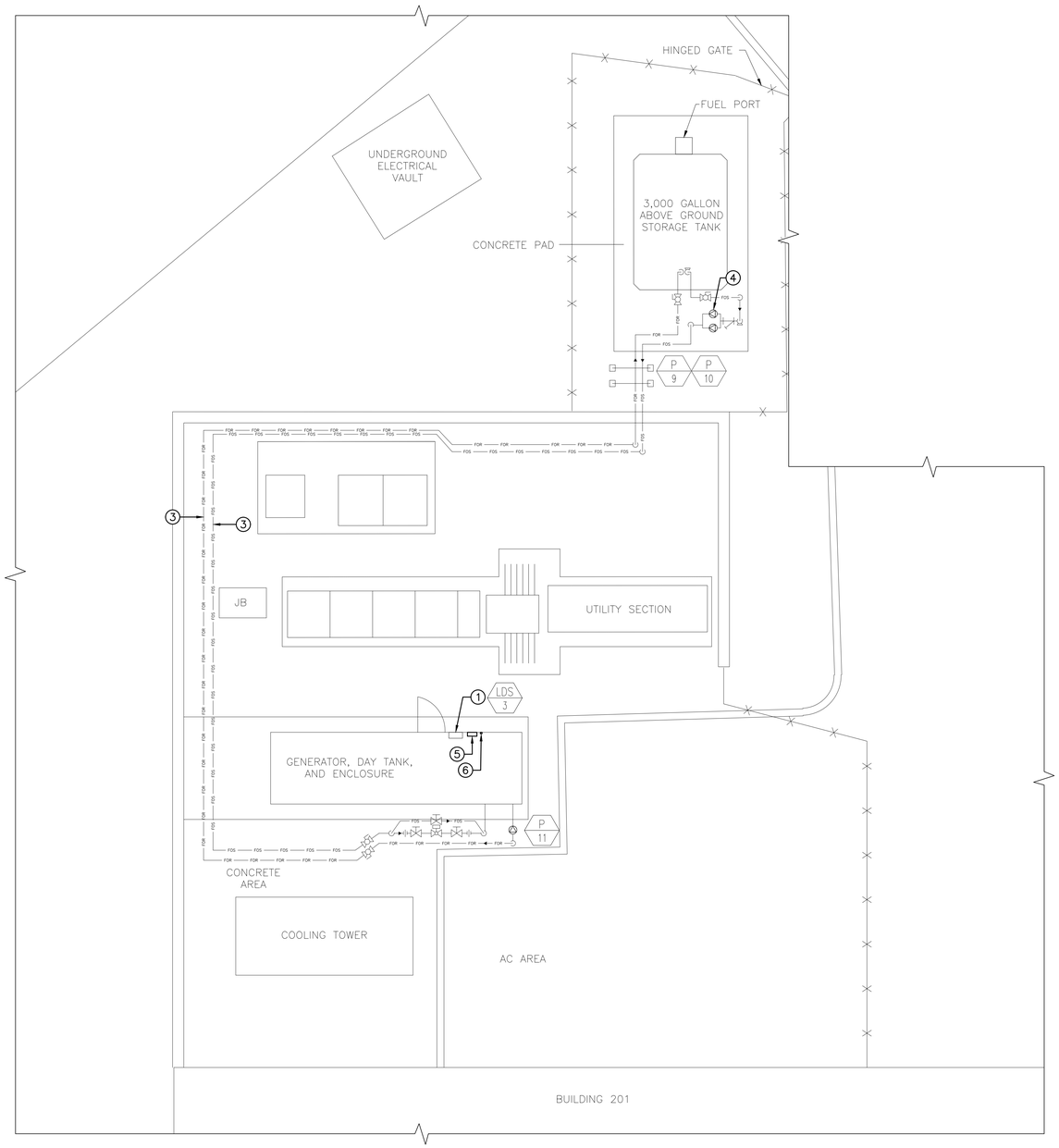

N

1
MI–104

MARE ISLAND
CONTROLS NEW WORK PLAN

SCALE: 1/4"=1'–0"

0 3 6 9 12 FT

GENERAL NOTES

I. CONTRACTOR MUST COORDINATE ANY CHANGES/ADDITIONS TO THE BUILDING MANAGEMENT SYSTEM WITH THE EXISTING BUILDING MANAGEMENT MANUFACTURER, JOHNSON CONTROLS, TO ENSURE PROPER CONNECTIONS CAN BE ACHIEVED WITH ALL EQUIPMENT.

JOHNSON CONTROLS CONTACT: NICK FIORITO, EMAIL: NICHOLAS.FIORITO@JCI.COM , PHONE: (916) 932–3884

II. PROVIDE CONDUIT AND CABLING FROM ALL ALL ALARMS, INDICATORS, AND CONTROLS TO THE EXISTING BUILDING MANAGEMENT SYSTEM IN ACCORDANCE WITH PROJECT SPECIFICATIONS.

III. SEE ASSOCIATED CONTROLS ONE LINE DIAGRAMS FOR SCHEMATIC CONFIGURATION OF ALL SENSORS AND THEIR ASSOCIATED INTERFACE MODULES.

IV. CONTRACTOR MUST COORDINATED ALL EQUIPMENT LOCATIONS WITH THE COR AND PROVIDE COORDINATION SHOP DRAWINGS INDICATING ALL LOCATIONS FOR INTENDED EQUIPMENT INSTALLATION PRIOR TO BEGINNING WORK.

KEYED NOTES

(1) INTEGRATE LEAK DETECTION SYSTEM CONTROLLER INTO EXISTING JOHNSON CONTROLS METASYS BUILDING MANAGEMENT SYSTEM.

(2) NOTE NOT APPLICABLE.

(3) PROVIDE PIPE TRACE CONTINUOUS SENSING CABLE–LEAK DETECTION WITHIN ALL DOUBLE WALLED CONTAINMENT PIPING. INTEGRATE TO ASSOCIATED LEAK DETECTION SYSTEM CONTROLLER.

(4) LEAD AND LAG FUEL PUMPS SHALL BE INTEGRATED INTO EXISTING DAY TANK LEVEL CONTROLLER. PUMPS SHALL START WHEN DAY TANK LEVEL CONTROLLER INDICATES PUMP START LEVEL STATUS. PUMPS SHALL SHUT OFF WHEN DAY TANK INDICATES NORMAL MAX LEVEL STATUS. LEAD AND LAG PUMP SHALL BE PROGRAMMED TO ALTERNATE WEEKLY.

(5) PROVIDE CONTROL PANEL ASSEMBLY BASIS OF DESIGN "JOHNSON CONTROLS M4–CGE/XPM STANDARD CONTROL PANEL ASSEMBLY" OR APPROVED EQUAL.

(6) PROVIDE LINE LEAK DETECTION SENSOR INTERFACE MODULE BASIS OF DESIGN "NVENT TRACETEK TTSIM–2–120" OR APPROVED EQUAL.

SEQUENCE OF OPERATIONS B201

A. GENERAL

A.1. CONTRACTOR SHALL INTEGRATE LEAK DETECTION AND PUMP CONTROLS INTO EXISTING BUILDING MANAGEMENT SYSTEM.

A.2. UPON STARTING OF THE EMERGENCY GENERATOR, FUEL SHALL TRANSFER FROM THE DAY TANK TO THE GENERATOR AS REQUIRED TO SUSTAIN OPERATION WITHOUT INTERRUPTIONS.

A.3. THE DAY TANK LOW FUEL LEVEL SHALL INDICATE TO THE BUILDING MANAGEMENT SYSTEM TO PROVIDE POWER TO SUPPLY PUMPS AT THE EXTERNAL FUEL STORAGE CONTAINER.

A.4. THE SUPPLY PUMPS SHALL RUN IN A LEAD LAG CONFIGURATION DEPENDING ON THE SUPPLY DEMAND BY THE SYSTEM.

A.5. THE PUMP SUPPLY BOX SHALL INCLUDE A LEAK DETECTION SYSTEM THAT SHALL TRIGGER AN ALARM IN THE BUILDING MANAGEMENT SYSTEM UPON DETECTION OF ANY LEAKS.

A.6. FUEL OIL PIPING CARRYING FUEL FROM THE EXTERNAL STORAGE TANK TO THE GENERATOR DAY TANK SHALL BE EQUIPPED WITH LEAK DETECTION AND A LEAK DETECTION SUMP SENSOR WHICH WILL TRIGGER AN ALARM IN THE BUILDING MANAGEMENT SYSTEM UPON THE DETECTION OF A LEAK.

A.7. AFTER THE EMERGENCY GENERATOR IS DE–ENERGIZED, THE SUPPLY PUMPS WILL CONTINUE TO SUPPLY FUEL TO THE GENERATOR DAY TANK UNTIL THE APPROPRIATE FUEL LEVEL IS REACHED, UPON WHICH THE SUPPLY PUMPS WILL DE–ENERGIZE.

Revisions:	Date:

CONSULTANT

ARCHITECT/ENGINEER OF RECORD

NEI Northeast Infrastructure, LLC
34 BROWN STREET
HONESDALE, PA 18431
OFFICE : (570) 253-0846
WWW.NEINFRA.COM

STAMP

JOHN W. CASH — REGISTERED PROFESSIONAL ENGINEER — CALIFORNIA — No. PE043114

Office of Construction and Facilities Management

U.S. Department of Veterans Affairs

Drawing Title	MARE ISLAND CONTROLS NEW WORK PLAN
Phase	BID DOCUMENTS
Project Title	CORRECT MARTINEZ & MARE ISLAND GENERATOR FUEL LINES
Project Number	612-23-005
Building Number	201
Approved: Project Director	VA SIERRA PACIFIC NETWORK (VISN 21) VA NORTHERN CALIFORNIA HEALTHCARE SYSTEM
Location	150 MUIR ROAD MARTINEZ, CA 94553 — 201 WALNUT AVENUE MARE ISLAND, CA 94592
Drawing Number	MI-104
Issue Date	04/17/2026
Checked	D.L.E.
Drawn	J.R.H.

6/14/2008 12:39:03 PM

File Path

VA FORM 08 - 6231

SEQUENCE OF OPERATIONS SUPPLY CONTROL VALVE

A. GENERAL

A.1. CONTRACTOR SHALL INTEGRATE FUEL SUPPLY CONTROL VALVE INTO EXISTING BUILDING MANAGEMENT SYSTEM.

A.2. UPON ENERGIZING OF THE FUEL OIL SUPPLY PUMPS, CONTROL VALVE SHALL OPEN.

A.3. UPON DE–ENERGIZATION OF THE FUEL OIL SUPPLY PUMPS, CONTROL VALVE SHALL CLOSE.

A.4. FUEL OIL SUPPLY PUMPS ENERGIZE AND DE–ENERGIZE WHEN THE EMERGENCY GENERATOR RUNS AND WHEN THE DAY TANK LEVEL INDICATOR SHOWS THAT THE DAY TANK REQUIRES ADDITIONAL FUEL FROM THE BULK STORAGE TANK.

SEQUENCE OF OPERATIONS FUEL OIL RETURN PUMP

A. GENERAL

A.1. CONTRACTOR SHALL INTEGRATE FUEL RETURN PUMP INTO EXISTING BUILDING MANAGEMENT SYSTEM.

A.2. FUEL OIL RETURN PUMP SHALL ENERGIZE IF EXCESS FUEL IS RETURNED FROM THE EMERGENCY GENERATOR BACK INTO THE DAY TANK AND THE DAY TANK LEVEL INDICATES MAXIMUM CAPACITY.

A.3. FUEL OIL RETURN PUMP SHALL BE ENERGIZED IN AN EMERGENCY SITUATION SUCH AS A DETECTED DAY TANK LEAK. THIS WILL ALLOW FUEL TO BE EVACUATED FROM THE DAY TANK BACK TO THE BULK STORAGE TANK.

JOB: 612–23–005
BUILDING: MARE ISLAND(MI) POINTS LIST

PAGE:

SYSTEM:
EMERGENCY GENERATOR FUEL SYSTEM

SYSTEM COMPONENT:	POINT ID	ABBREVIATION	POINT LEGEND: ALARM/ANALOG ALERT/BINARY ALERT	SYSTEM OUTPUTS: BINARY	SYSTEM OUTPUTS: ANALOG	SYSTEM INPUTS: BINARY	SYSTEM INPUTS: ANALOG	SYSTEM SOFTWARE/CONTROL: ALARM PROCESSING	SYSTEM SOFTWARE/CONTROL: APPLICATION/FUNCTION	REMARKS
SOLENOID VALVE MANIFOLD – SUPPLY CONTROL VALVE MODULATION	AO–1			●	●				●	
MI LEAK DETECTOR – DAY TANK RUPTURE BASIN	BO–1		●		●				●	
MI LEVEL PROBE – MAIN TANK HIGH	AI–1				●		●	●		
MI LEVEL PROBE – MAIN TANK LOW	AI–2				●		●			
MI LEVEL PROBE – DAY TANK HIGH	AI–3				●		●	●	●	
MI LEVEL PROBE – DAY TANK LOW	AI–4				●		●		●	
MI LEAK DETECTOR – TANK INTERSTITIAL	BO–2		●		●				●	
MI LEAK DETECTOR – SUPPLY PUMP BOX	BO–3		●		●				●	
MI LEAK DETECTOR – SUPPLY LINE	BO–4		●		●				●	
MI LEAK DETECTOR – RETURN LINE	BO–5		●		●				●	
MI P–1 – RUN STATUS	BI–1			●	●					
MI P–1 – START/STOP	BO–6		●		●				●	
MI P–2 – START/STOP	BO–7		●		●				●	
MI P–2 – RUN STATUS	BI–2			●	●					
MI DAY TANK RETURN PUMP – RUN STATUS	BI–3			●	●					
MI DAY TANK RETURN PUMP – START/STOP	BO–8		●		●				●	
MI SUPPLY PUMPS – STRAINER HIGH DIFFERENTIAL	BI–4				●					

N

1
MI–105

MARE ISLAND
FUEL SYSTEM POINTS LIST
SCALE: 1/8"=1'–0"

GENERAL NOTES

I. CONTRACTOR MUST COORDINATE ANY CHANGES/ADDITIONS TO THE BUILDING MANAGEMENT SYSTEM WITH THE EXISTING BUILDING MANAGEMENT MANUFACTURER, JOHNSON CONTROLS, TO ENSURE PROPER CONNECTIONS CAN BE ACHIEVED WITH ALL EQUIPMENT.

JOHNSON CONTROLS CONTACT: NICK FIORITO, EMAIL: NICHOLAS.FIORITO@JCI.COM , PHONE: (916) 932–3884

II. PROVIDE CONDUIT AND CABLING FROM ALL ALL ALARMS, INDICATORS, AND CONTROLS TO THE EXISTING BUILDING MANAGEMENT SYSTEM IN ACCORDANCE WITH PROJECT SPECIFICATIONS.

III. CONTRACTOR MUST COORDINATED ALL EQUIPMENT LOCATIONS WITH THE COR AND PROVIDE COORDINATION SHOP DRAWINGS INDICATING ALL LOCATIONS FOR INTENDED EQUIPMENT INSTALLATION PRIOR TO BEGINNING WORK.

KEYED NOTES

(1) INTEGRATE LEAK DETECTION SYSTEM CONTROLLER INTO EXISTING JOHNSON CONTROLS METASYS BUILDING MANAGEMENT SYSTEM.

(2) NOTE NOT APPLICABLE.

(3) PROVIDE PIPE TRACE CONTINUOUS SENSING CABLE–LEAK DETECTION WITHIN ALL DOUBLE WALLED CONTAINMENT PIPING. INTEGRATE TO ASSOCIATED LEAK DETECTION SYSTEM CONTROLLER.

(4) LEAD AND LAG FUEL PUMPS SHALL BE INTEGRATED INTO EXISTING DAY TANK LEVEL CONTROLLER. PUMPS SHALL START WHEN DAY TANK LEVEL CONTROLLER INDICATES PUMP START LEVEL STATUS. PUMPS SHALL SHUT OFF WHEN DAY TANK INDICATES NORMAL MAX LEVEL STATUS. LEAD AND LAG PUMP SHALL BE PROGRAMMED TO ALTERNATE WEEKLY.

SEQUENCE OF OPERATIONS B201

A. GENERAL

A.1. CONTRACTOR SHALL INTEGRATE LEAK DETECTION AND PUMP CONTROLS INTO EXISTING BUILDING MANAGEMENT SYSTEM.

A.2. UPON STARTING OF THE EMERGENCY GENERATOR, FUEL SHALL TRANSFER FROM THE DAY TANK TO THE GENERATOR AS REQUIRED TO SUSTAIN OPERATION WITHOUT INTERRUPTIONS.

A.3. THE DAY TANK LOW FUEL LEVEL SHALL INDICATE TO THE BUILDING MANAGEMENT SYSTEM TO PROVIDE POWER TO SUPPLY PUMPS AT THE EXTERNAL FUEL STORAGE CONTAINER.

A.4. THE SUPPLY PUMPS SHALL RUN IN A LEAD LAG CONFIGURATION DEPENDING ON THE SUPPLY DEMAND BY THE SYSTEM.

A.5. THE PUMP SUPPLY BOX SHALL INCLUDE A LEAK DETECTION SYSTEM THAT SHALL TRIGGER AN ALARM IN THE BUILDING MANAGEMENT SYSTEM UPON DETECTION OF ANY LEAKS.

A.6. FUEL OIL PIPING CARRYING FUEL FROM THE EXTERNAL STORAGE TANK TO THE GENERATOR DAY TANK SHALL BE EQUIPPED WITH LEAK DETECTION AND A LEAK DETECTION SUMP SENSOR WHICH WILL TRIGGER AN ALARM IN THE BUILDING MANAGEMENT SYSTEM UPON THE DETECTION OF A LEAK.

A.7. AFTER THE EMERGENCY GENERATOR IS DE–ENERGIZED, THE SUPPLY PUMPS WILL CONTINUE TO SUPPLY FUEL TO THE GENERATOR DAY TANK UNTIL THE APPROPRIATE FUEL LEVEL IS REACHED, UPON WHICH THE SUPPLY PUMPS WILL DE–ENERGIZE.

6/14/2009 12:39:03 PM

File Path

Revisions:	Date:

CONSULTANT

ARCHITECT/ENGINEER OF RECORD

NEI Northeast Infrastructure, LLC
34 BROWN STREET
HONESDALE, PA 18431
OFFICE : (570) 253-0846
WWW.NEINFRA.COM

STAMP

COMMONWEALTH OF PENNSYLVANIA REGISTERED PROFESSIONAL ENGINEER No. PE043114E

Office of Construction and Facilities Management

VA U.S. Department of Veterans Affairs

Drawing Title: MARE ISLAND CONTROLS POINTS LIST

Phase: BID DOCUMENTS

Project Title: CORRECT MARTINEZ & MARE ISLAND GENERATOR FUEL LINES

Project Number: 612-23-005

Building Number: 201

Approved: Project Director: VA SIERRA PACIFIC NETWORK (VISN 21) VA NORTHERN CALIFORNIA HEALTHCARE SYSTEM

Location: 150 MUIR ROAD MARTINEZ, CA 94553 — 201 WALNUT AVENUE MARE ISLAND, CA 94592

Issue Date: 04/17/2026 | Checked: D.L.E. | Drawn: J.R.H.

Drawing Number: MI-105

VA FORM 08 - 6231

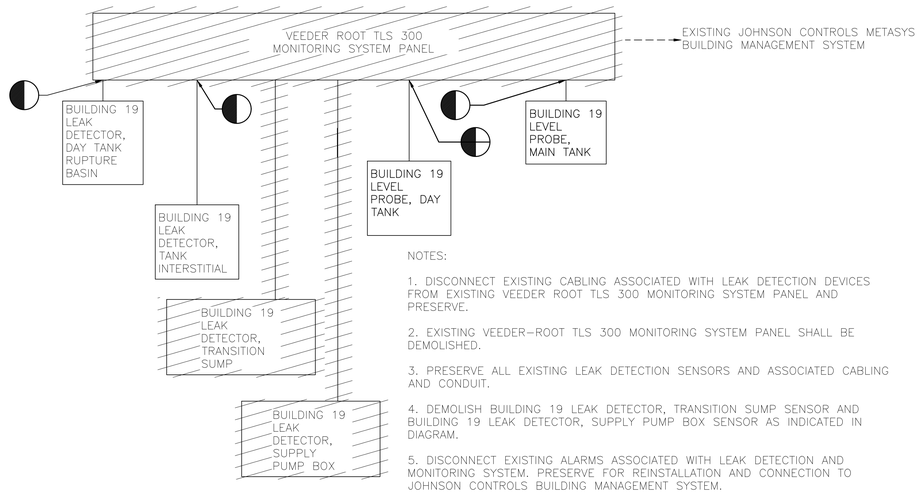

NOTES:

1. DISCONNECT EXISTING CABLING ASSOCIATED WITH LEAK DETECTION DEVICES FROM EXISTING VEEDER ROOT TLS 300 MONITORING SYSTEM PANEL AND PRESERVE.

2. EXISTING VEEDER-ROOT TLS 300 MONITORING SYSTEM PANEL SHALL BE DEMOLISHED.

3. PRESERVE ALL EXISTING LEAK DETECTION SENSORS AND ASSOCIATED CABLING AND CONDUIT.

4. DEMOLISH BUILDING 19 LEAK DETECTOR, TRANSITION SUMP SENSOR AND BUILDING 19 LEAK DETECTOR, SUPPLY PUMP BOX SENSOR AS INDICATED IN DIAGRAM.

5. DISCONNECT EXISTING ALARMS ASSOCIATED WITH LEAK DETECTION AND MONITORING SYSTEM. PRESERVE FOR REINSTALLATION AND CONNECTION TO JOHNSON CONTROLS BUILDING MANAGEMENT SYSTEM.

1 MI-400 MARTINEZ BUILDING 19 EXISTING LEAK DETECTION CONTROLS DIAGRAM

SCALE:NO SCALE

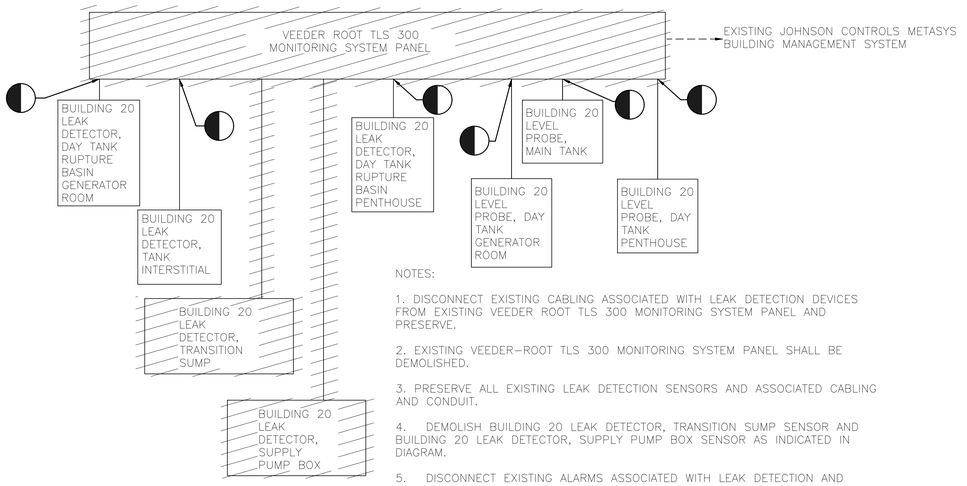

NOTES:

1. DISCONNECT EXISTING CABLING ASSOCIATED WITH LEAK DETECTION DEVICES FROM EXISTING VEEDER ROOT TLS 300 MONITORING SYSTEM PANEL AND PRESERVE.

2. EXISTING VEEDER-ROOT TLS 300 MONITORING SYSTEM PANEL SHALL BE DEMOLISHED.

3. PRESERVE ALL EXISTING LEAK DETECTION SENSORS AND ASSOCIATED CABLING AND CONDUIT.

4. DEMOLISH BUILDING 20 LEAK DETECTOR, TRANSITION SUMP SENSOR AND BUILDING 20 LEAK DETECTOR, SUPPLY PUMP BOX SENSOR AS INDICATED IN DIAGRAM.

5. DISCONNECT EXISTING ALARMS ASSOCIATED WITH LEAK DETECTION AND MONITORING SYSTEM. PRESERVE FOR REINSTALLATION AND CONNECTION TO JOHNSON CONTROLS BUILDING MANAGEMENT SYSTEM.

3 MI-400 MARTINEZ BUILDING 20 EXISTING LEAK DETECTION CONTROLS DIAGRAM

SCALE:NO SCALE

GENERAL NOTES

I. CONTRACTOR MUST COORDINATE ANY CHANGES/ADDITIONS TO THE BUILDING MANAGEMENT SYSTEM WITH THE EXISTING BUILDING MANAGEMENT MANUFACTURER, JOHNSON CONTROLS, TO ENSURE PROPER CONNECTIONS CAN BE ACHIEVED WITH ALL EQUIPMENT.

JOHNSON CONTROLS CONTACT: NICK FIORITO, EMAIL: NICHOLAS.FIORITO@JCI.COM , PHONE: (916) 932-3884

II. PROVIDE CONDUIT AND CABLING FROM ALL ALL ALARMS, INDICATORS, AND CONTROLS TO THE EXISTING BUILDING MANAGEMENT SYSTEM IN ACCORDANCE WITH PROJECT SPECIFICATIONS.

III. ALL CONTROLS WIRING SHALL BE PROVIDED IN ACCORDANCE WITH DIVISION 27 SPECIFICATIONS AND THE MANUFACTURERS RECOMMENDED INSTALLATION INSTRUCTIONS.

IV. CONTRACTOR MUST COORDINATE ALL EQUIPMENT LOCATIONS WITH THE COR AND PROVIDE COORDINATION SHOP DRAWINGS INDICATING ALL LOCATIONS FOR INTENDED EQUIPMENT INSTALLATION PRIOR TO BEGINNING WORK.

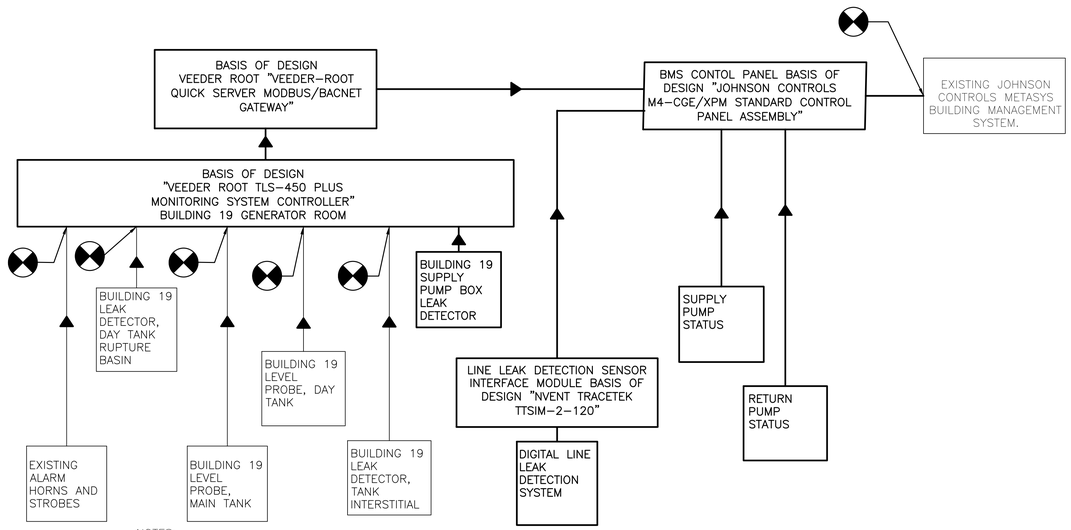

NOTES:

1. EXISTING LEAK DETECTION SENSORS SHALL BE INTEGRATED INTO PROVIDED VEEDER ROOT INFORMATION MANAGEMENT PANEL

2. CONDUIT AND CONTROLS WIRING SHALL BE PROVIDED FROM CONTROL PANEL TO ALL PROVIDED LEAK DETECTION SENSORS.

3. SEE ASSOCIATED BUILDING 19 CONTROLS DRAWINGS FOR LOCATIONS OF ALL EQUIPMENT AND SENSORS.

4. LINE LEAK DETECTION SYSTEM SHALL UTILIZE LINE LEAK DETECTION MASTER MODULE TO INTEGRATE INTO VEEDER ROOT LEAK DETECTION SYSTEM.

5. PRESERVED ALARMS SHALL BE INTEGRATED INTO VEEDER ROOT LEAK DETECTION SYSTEM.

6. CONTRACTOR SHALL INSTALL BACNET/IP ROUTER TO INTEGRATE SUPPLY AND RETURN PUMP STATUS INTO EXISTING JOHNSON CONTROLS BUILDING MANAGEMENT SYSTEM.

7. CONTRACTOR SHALL INTEGRATE VEEDER ROOT LEAK DETECTION SYSTEM INTO EXISTING JOHNSON CONTROLS BUILDING MANAGEMENT SYSTEM.

2 MI-400 MARTINEZ BUILDING 19 NEW WORK LEAK DETECTION CONTROLS DIAGRAM

SCALE:NO SCALE

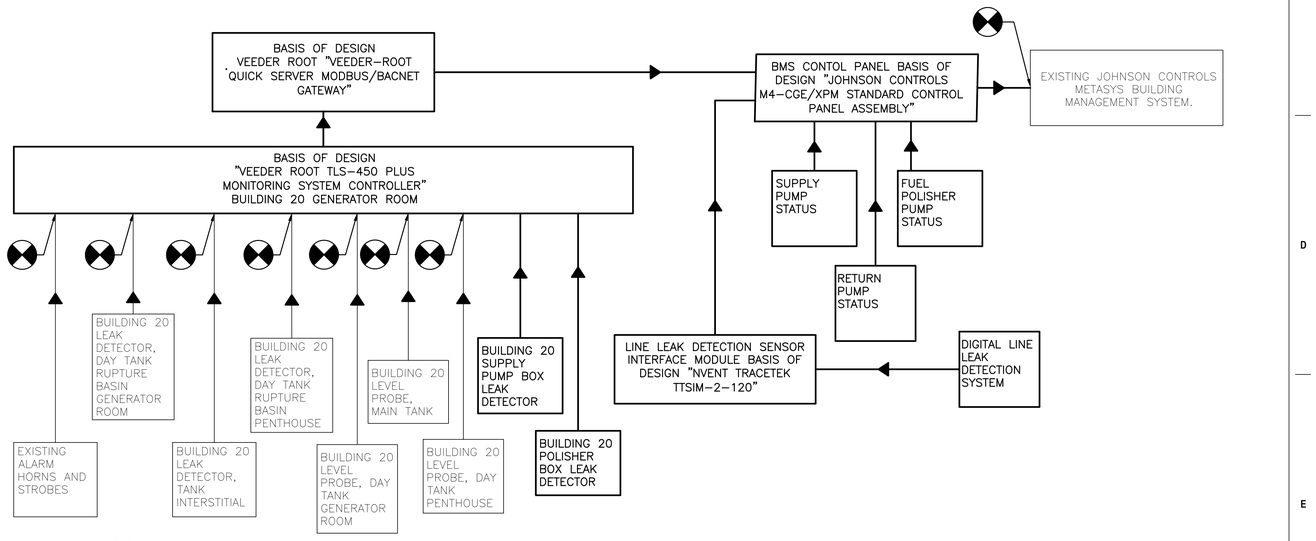

NOTES:

1. EXISTING LEAK DETECTION SENSORS SHALL BE INTEGRATED INTO PROVIDED VEEDER ROOT INFORMATION MANAGEMENT PANEL

2. CONDUIT AND CONTROLS WIRING SHALL BE PROVIDED FROM CONTROL PANEL TO ALL PROVIDED LEAK DETECTION SENSORS.

3. SEE ASSOCIATED BUILDING 20 CONTROLS DRAWINGS FOR LOCATIONS OF ALL EQUIPMENT AND SENSORS.

4. LINE LEAK DETECTION SYSTEM SHALL UTILIZE LINE LEAK DETECTION MASTER MODULE TO INTEGRATE INTO VEEDER ROOT LEAK DETECTION SYSTEM.

5. PRESERVED ALARMS SHALL BE INTEGRATED INTO VEEDER ROOT LEAK DETECTION SYSTEM.

6. CONTRACTOR SHALL INSTALL BACNET/IP ROUTER TO INTEGRATE SUPPLY PUMP STATUS, RETURN PUMP STATUS, AND FUEL POLISHER PUMP STATUS INTO EXISTING JOHNSON CONTROLS BUILDING MANAGEMENT SYSTEM.

7. CONTRACTOR SHALL INTEGRATE VEEDER ROOT LEAK DETECTION SYSTEM INTO EXISTING JOHNSON CONTROLS BUILDING MANAGEMENT SYSTEM.

4 MI-400 MARTINEZ BUILDING 20 NEW WORK LEAK DETECTION CONTROLS DIAGRAM

SCALE:NO SCALE

Revisions:	Date:

CONSULTANT

ARCHITECT/ENGINEER OF RECORD

NEI Northeast Infrastructure, LLC
34 BROWN STREET
HONESDALE, PA 18431
OFFICE : (570) 253-0846
WWW.NEINFRA.COM

STAMP

REGISTERED PROFESSIONAL ENGINEER
DAVID L. SHAW
No. PE045114E
STATE OF CALIFORNIA

Office of Construction and Facilities Management

VA U.S. Department of Veterans Affairs

Drawing Title: MARTINEZ MECHANICAL CONTROLS DIAGRAMS	Phase: BID DOCUMENTS
Approved: Project Director: VA SIERRA PACIFIC NETWORK (VISN 21) VA NORTHERN CALIFORNIA HEALTHCARE SYSTEM	

Project Title: CORRECT MARTINEZ & MARE ISLAND GENERATOR FUEL LINES		Project Number: 612-23-005
		Building Number: 19 & 20
Location: 150 MUIR ROAD MARTINEZ, CA 94553	201 WALNUT AVENUE MARE ISLAND, CA 94592	Drawing Number: MI-400
Issue Date: 04/17/2026	Checked: D.L.E.	Drawn: F.R.O.

File Path: 01/14/2009 12:39:03 PM

VA FORM 08 - 6231

GENERAL NOTES

I. CONTRACTOR MUST COORDINATE ANY CHANGES/ADDITIONS TO THE BUILDING MANAGEMENT SYSTEM WITH THE EXISTING BUILDING MANAGEMENT MANUFACTURER, JOHNSON CONTROLS, TO ENSURE PROPER CONNECTIONS CAN BE ACHIEVED WITH ALL EQUIPMENT.

JOHNSON CONTROLS CONTACT: NICK FIORITO, EMAIL: NICHOLAS.FIORITO@JCI.COM , PHONE: (916) 932-3884

II. PROVIDE CONDUIT AND CABLING FROM ALL ALL ALARMS, INDICATORS, AND CONTROLS TO THE EXISTING BUILDING MANAGEMENT SYSTEM IN ACCORDANCE WITH PROJECT SPECIFICATIONS.

III. ALL CONTROLS WIRING SHALL BE PROVIDED IN ACCORDANCE WITH DIVISION 27 SPECIFICATIONS AND THE MANUFACTURERS RECOMMENDED INSTALLATION INSTRUCTIONS.

IV. CONTRACTOR MUST COORDINATE ALL EQUIPMENT LOCATIONS WITH THE COR AND PROVIDE COORDINATION SHOP DRAWINGS INDICATING ALL LOCATIONS FOR INTENDED EQUIPMENT INSTALLATION PRIOR TO BEGINNING WORK.

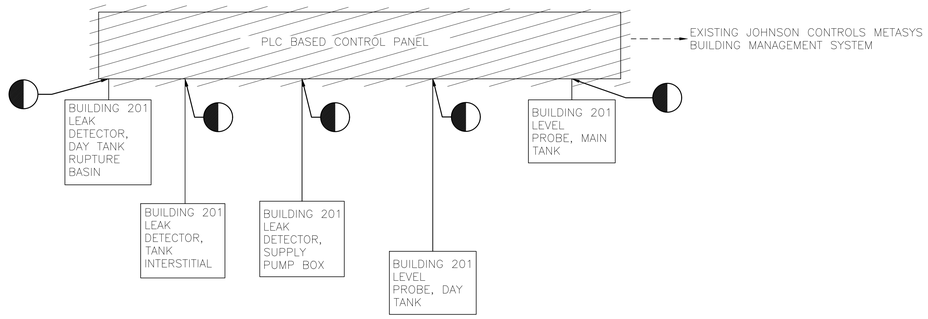

NOTES:

1. DISCONNECT EXISTING CABLING ASSOCIATED WITH LEAK DETECTION DEVICES FROM EXISTING PLC-BASED MONITORING SYSTEM PANEL AND PRESERVE.

2. EXISTING PLC-BASED MONITORING SYSTEM PANEL SHALL BE DEMOLISHED.

3. PRESERVE ALL EXISTING LEAK DETECTION SENSORS AND ASSOCIATED CABLING AND CONDUIT.

4. DISCONNECT EXISTING ALARMS ASSOCIATED WITH LEAK DETECTION AND MONITORING SYSTEM. PRESERVE FOR REINSTALLATION AND CONNECTION TO JOHNSON CONTROLS BUILDING MANAGEMENT SYSTEM.

1 MI-401 MARE ISLAND BUILDING 201 EXISTING LEAK DETECTION CONTROLS DIAGRAM

SCALE:NO SCALE

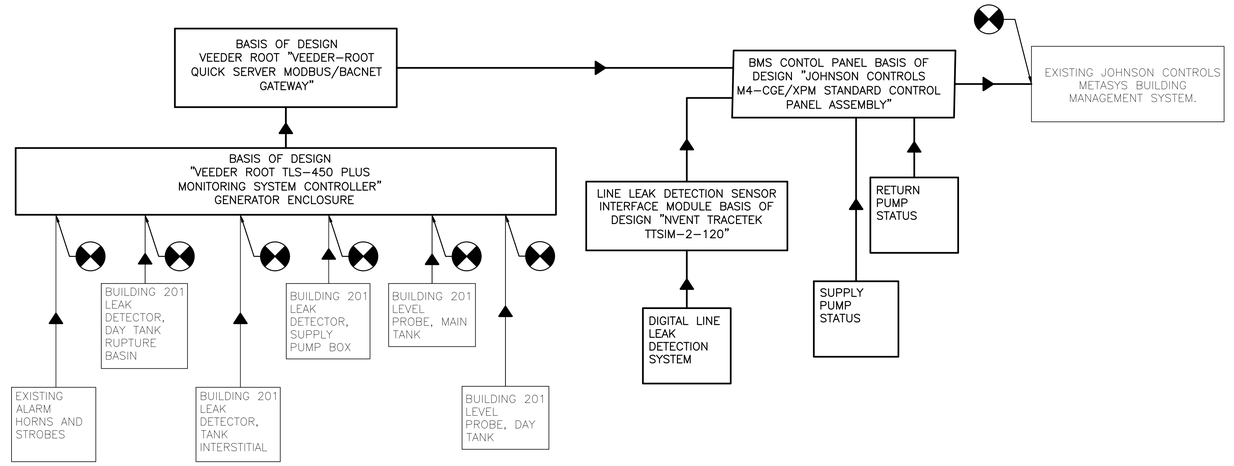

NOTES:

1. EXISTING LEAK DETECTION SENSORS SHALL BE INTEGRATED INTO PROVIDED VEEDER ROOT INFORMATION MANAGEMENT PANEL

2. CONDUIT AND CONTROLS WIRING SHALL BE PROVIDED FROM CONTROL PANEL TO ALL PROVIDED LEAK DETECTION SENSORS.

3. SEE ASSOCIATED MARE ISLAND CAMPUS CONTROLS DRAWINGS FOR LOCATIONS OF ALL EQUIPMENT AND SENSORS.

4. LINE LEAK DETECTION SYSTEM SHALL UTILIZE LINE LEAK DETECTION MASTER MODULE TO INTEGRATE INTO VEEDER ROOT LEAK DETECTION SYSTEM.

5. PRESERVED ALARMS SHALL BE INTEGRATED INTO VEEDER ROOT LEAK DETECTION SYSTEM.

6. CONTRACTOR SHALL INSTALL BACNET/IP ROUTER TO INTEGRATE SUPPLY PUMP STATUS, RETURN PUMP STATUS, AND FUEL POLISHER PUMP STATUS INTO EXISTING JOHNSON CONTROLS BUILDING MANAGEMENT SYSTEM.

7. CONTRACTOR SHALL INTEGRATE VEEDER ROOT LEAK DETECTION SYSTEM INTO EXISTING JOHNSON CONTROLS BUILDING MANAGEMENT SYSTEM.

2 MI-401 MARE ISLAND BUILDING 201 NEW WORK LEAK DETECTION CONTROLS DIAGRAM

SCALE:NO SCALE

Revisions:	Date:

CONSULTANT

ARCHITECT/ENGINEER OF RECORD

NEI Northeast Infrastructure, LLC
34 BROWN STREET
HONESDALE, PA 18431
OFFICE : (570) 253-0846
WWW.NEINFRA.COM

STAMP

COMMONWEALTH OF PENNSYLVANIA REGISTERED PROFESSIONAL ENGINEER No. PE045114E

Office of Construction and Facilities Management

VA U.S. Department of Veterans Affairs

Drawing Title: MARE ISLAND MECHANICAL CONTROLS DIAGRAMS	Phase: BID DOCUMENTS	Project Title: CORRECT MARTINEZ & MARE ISLAND GENERATOR FUEL LINES	Project Number: 612-23-005
Approved: Project Director: VA SIERRA PACIFIC NETWORK (VISN 21) VA NORTHERN CALIFORNIA HEALTHCARE SYSTEM		Location: 150 MUIR ROAD MARTINEZ, CA 94553 / 201 WALNUT AVENUE MARE ISLAND, CA 94592	Building Number: 201
		Issue Date: 04/17/2026 / Checked: D.L.E. / Drawn: F.R.O.	Drawing Number: MI-401

6/14/2009 12:39:03 PM

File Path

VA FORM 08 - 6231

BAS POINT SUMMARY (NEW POINTS ONLY)											
UNIT/TC AI–ANALOG INPUT BI–BINARY INPUT BO–BINARY OUTPUT AO–ANALOG OUTPUT AV–ANALOG VARIABLE BV–BINARY VARIABLE	HARDWARE POINTS				SOFTWARE POINTS						SHOW ON GRAPHIC
	AI	BI	BO	AO	AV	BV	SCHED	TREND	LOCAL ALARM	REMOTE ALARM	
MARTINEZ BUILDING 19 EMERGENCY GENERATOR FUEL SYSTEM	4	20	8	1	0	0	3	5	15	8	17
MARTINEZ BUILDING 20 EMERGENCY GENERATOR FUEL SYSTEM	6	34	12	2	0	0	11	10	24	13	28
MARE ISLAND EMERGENCY GENERATOR FUEL SYSTEM	4	20	8	1	0	0	6	5	15	8	17
TOTALS	14	74	28	4	–	–	20	20	54	29	62
	120				123						

1 MI–402 BAS POINTS SUMMARY
SCALE:NO SCALE

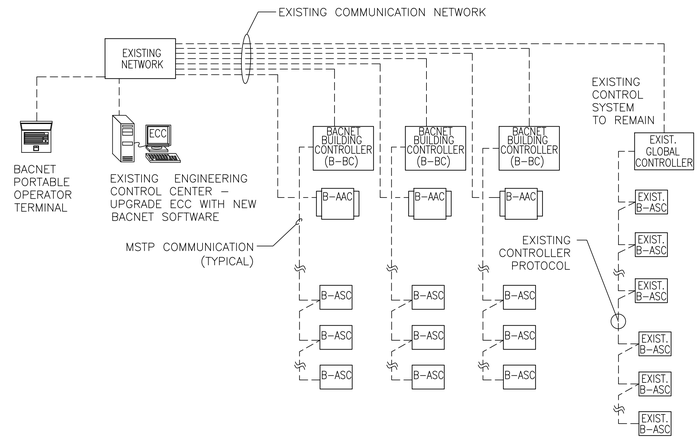

NOTES
1. INSTALL NEW BACNET SOFTWARE ON EXISTING ENGINEERING CONTROL CENTER (ECC.)
2. REUSE EXISTING COMMUNICATION NETWORK.
3. EXISTING CONTROLLERS TO REMAIN.
4. INSTALL MULTIPLE BUILDING CONTROLLERS AS REQUIRED.
5. INSTALL NEW CONTROLLERS (B–AAC, B–ASC) AS REQUIRED,
6. NETWORK ROUTERS AND REPEATERS WILL BE PROVIDED TO COMMUNICATION RUNS THAT EXCEED ALLOWABLE DISTANCES. EB MANAGERS SHALL BE PROVIDED AS NECESSARY TO LIMIT EXCESSIVE TRAFFIC THROUGHOUT THE BUILDING MANAGEMENT SYSTEM NETWORK. DESIGN MUST BE COORDINATED WITH JOHNSON CONTROLS. CONTACT NICK FIORITO – 916–932–3884.

CONTROL SYSTEM CONFIGURATION
EXISTING ECC TO REMAIN, INSTALL NEW BACNET SOFTWARE ON EXISTING ECC. EXISTING CONTROL SYSTEM SOFTWARE TO CO–EXIST ON ECC. INSTALL NEW BACNET CONTROLS ON CURRENT PROJECT, EXISTING CONTROL SYSTEM TO REMAIN, RE–USE EXISTING COMMUNICATION NETWORK.

GENERAL NOTES

I. CONTRACTOR MUST COORDINATE ANY CHANGES/ADDITIONS TO THE BUILDING MANAGEMENT SYSTEM WITH THE EXISTING BUILDING MANAGEMENT MANUFACTURER, JOHNSON CONTROLS, TO ENSURE PROPER CONNECTIONS CA BE ACHIEVED WITH ALL EQUIPMENT.

JOHNSON CONTROLS CONTACT: NICK FIORITO, EMAIL: NICHOLAS.FIORITO@JCI.COM , PHONE: (916) 932–3884

II. PROVIDE CONDUIT AND CABLING FROM ALL ALL ALARMS, INDICATORS, AND CONTROLS TO THE EXISTING BUILDING MANAGEMENT SYSTEM IN ACCORDANCE WITH PROJECT SPECIFICATIONS.

III. CONTRACTOR MUST COORDINATE ALL EQUIPMENT LOCATIONS WITH THE COR AND PROVIDE COORDINATION SHOP DRAWINGS INDICATING ALL LOCATIONS FOR INTENDED EQUIPMENT INSTALLATION PRIOR TO BEGINNING WORK.

6/14/2009 12:39:03 PM

File Path:

Revisions:	Date:

CONSULTANT

ARCHITECT/ENGINEER OF RECORD

NEI Northeast Infrastructure, LLC
34 BROWN STREET
HONESDALE, PA 18431
OFFICE : (570) 253-0846
WWW.NEINFRA.COM

STAMP

Office of Construction and Facilities Management

U.S. Department of Veterans Affairs

Drawing Title: CONTROLS SUMMARY	Phase: BID DOCUMENTS
Approved: Project Director: VA SIERRA PACIFIC NETWORK (VISN 21) VA NORTHERN CALIFORNIA HEALTHCARE SYSTEM	
Project Title: CORRECT MARTINEZ & MARE ISLAND GENERATOR FUEL LINES	Project Number: 612-23-005
	Building Number: 201
Location: 150 MUIR ROAD, MARTINEZ, CA 94553 / 201 WALNUT AVENUE, MARE ISLAND, CA 94592	Drawing Number: MI-402
Issue Date: 04/17/2026	Checked: D.L.E. / Drawn: F.R.O.

VA FORM 08 - 6231

GENERAL NOTE

1. CONTRACTOR SHALL PROVIDE SEISMIC SHOP DRAWINGS FOR ALL REPLACEMENT EQUIPMENT IN ACCORDANCE WITH SPECIFICATION 13 05 41.

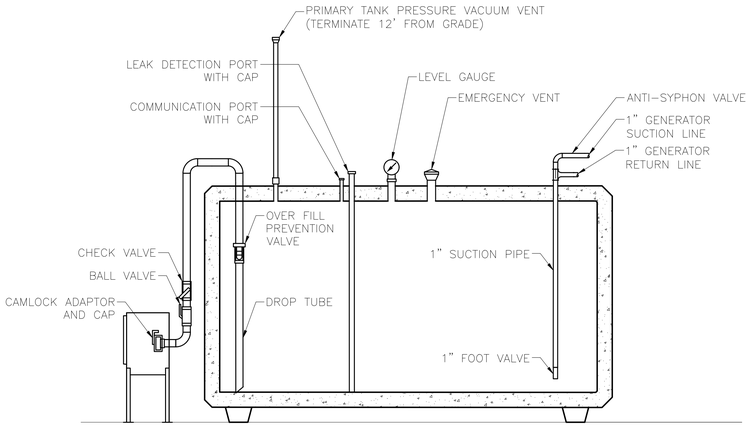

1 M-500 TYPICAL FUEL OIL TANK SECTION
SCALE:NOT TO SCALE

NOTE:
SUPERSTRUT CATALOG NUMBERS SHOWN, OR EQUAL UNISTRUT OR B-LINE SPACING: 6' O.C.

CONTRACTOR SHALL COORDINATE WITH GENERATOR TO ENSURE THAT PIPING STRUCTURES DO NOT I INTERFERE WITH GENERATOR AND ALL EQUIPMENT SERVED BY FUEL PIPING TO ENSURE ACCESS, MAINTENANCE AND NORMAL OPERATION CAN BE MAINTAINED.

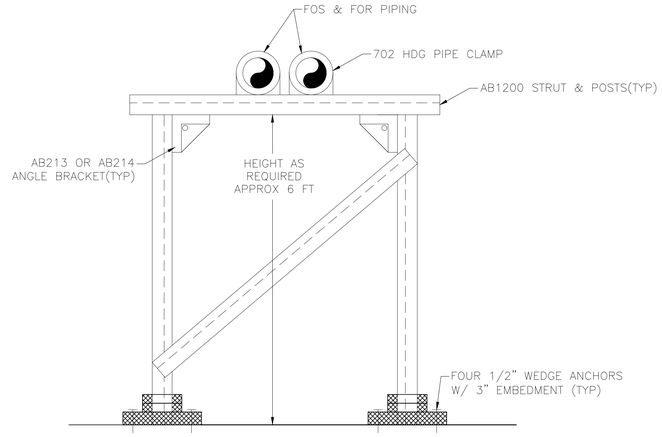

2 M-500 PIPE SUPPORT DETAIL
SCALE:NOT TO SCALE

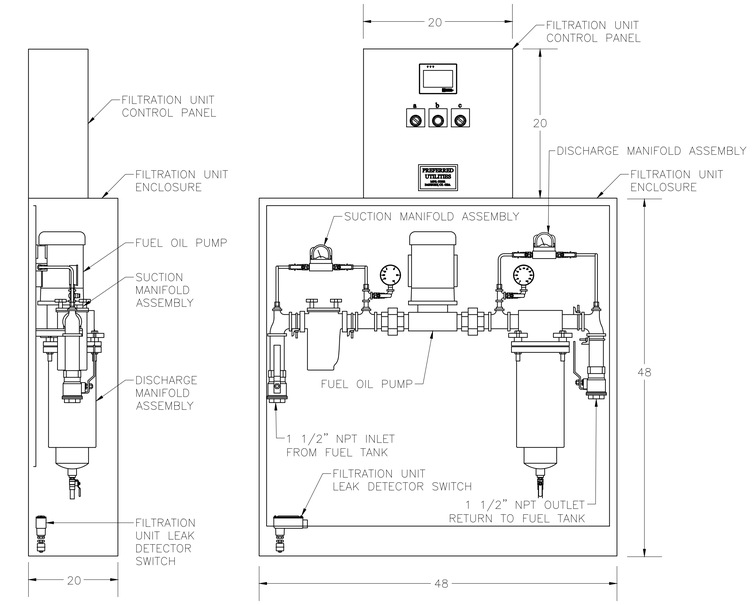

3 M-500 TYPICAL FUEL POLISHER DETAIL
SCALE:NOT TO SCALE

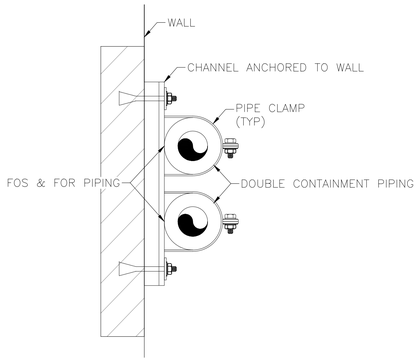

4 M-500 WALL MOUNTED PIPING SUPPORT DETAIL
SCALE:NOT TO SCALE

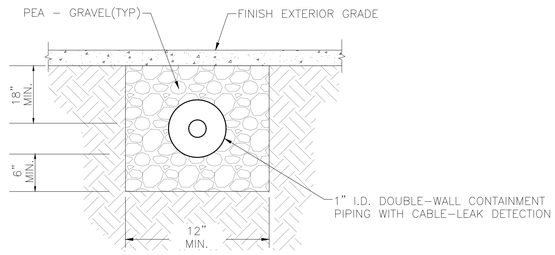

5 M-500 SECONDARY CONTAINMENT PIPING TRENCH DETAIL
SCALE:NOT TO SCALE

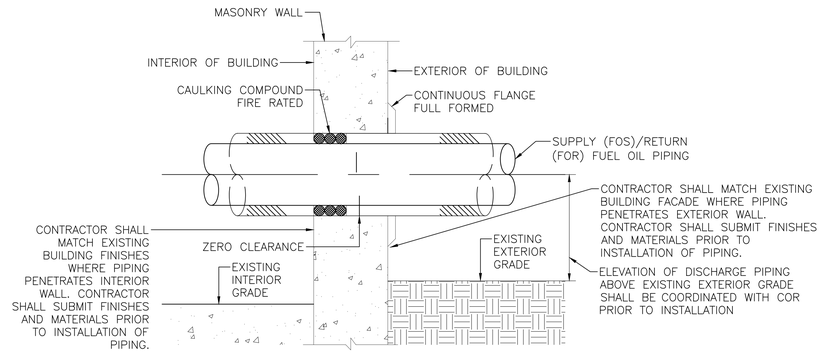

6 M-500 PIPE PENETRATION THROUGH WALL DETAIL - EXTERIOR
SCALE:NOT TO SCALE

Revisions:	Date:

CONSULTANT

ARCHITECT/ENGINEER OF RECORD

NEI Northeast Infrastructure, LLC
34 BROWN STREET
HONESDALE, PA 18431
OFFICE : (570) 253-0846
WWW.NEINFRA.COM

STAMP

Office of Construction and Facilities Management

VA U.S. Department of Veterans Affairs

Drawing Title: MECHANICAL DETAILS 1	Phase: BID DOCUMENTS
Approved: Project Director: VA SIERRA PACIFIC NETWORK (VISN 21) VA NORTHERN CALIFORNIA HEALTHCARE SYSTEM	
Project Title: CORRECT MARTINEZ & MARE ISLAND GENERATOR FUEL LINES	Project Number: 612-23-005
	Building Number: N/A
Location: 150 MUIR ROAD MARTINEZ, CA 94553 / 201 WALNUT AVENUE MARE ISLAND, CA 94592	Drawing Number: M-500
Issue Date: 04/17/2026	Checked: D.L.E. / Drawn: F.R.O.

6/14/2009 12:28:03 PM

File Path

VA FORM 08 - 6231

GENERAL NOTE

1. CONTRACTOR SHALL PROVIDE SEISMIC SHOP DRAWINGS FOR ALL REPLACEMENT EQUIPMENT IN ACCORDANCE WITH SPECIFICATION 13 05 41.

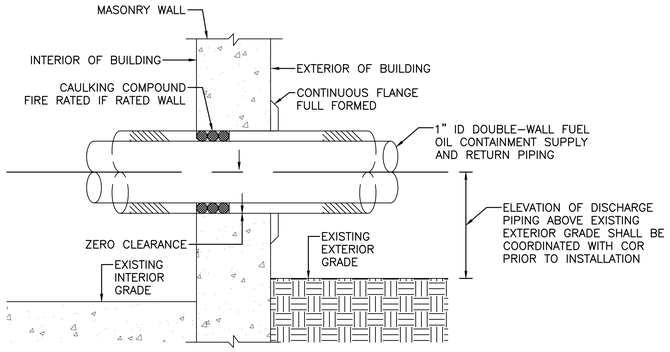

1 FUEL OIL PIPE PENETRATION THROUGH WALL DETAIL – EXTERIOR

M-501 SCALE:NOT TO SCALE

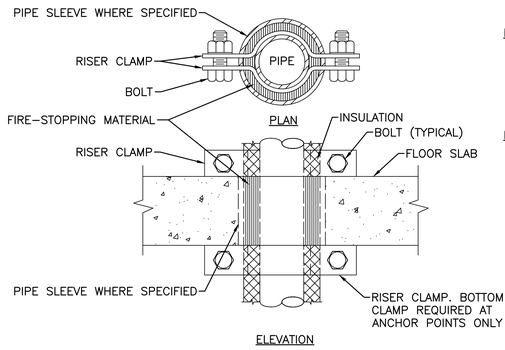

NOTES
1. PROVIDE ANCHORS ONLY WHERE SHOWN ON DRAWINGS.
2. EXTEND SLEEVE ABOVE FLOOR WHERE SPECIFIED

DESIGNERS NOTE
1. SHOW REQUIRED ANCHORS ON PLAN, SECTIONS OR DIAGRAMS.

2 SUPPORT ANCHOR FOR PIPE RISERS DETAIL

M-501 SCALE:NOT TO SCALE

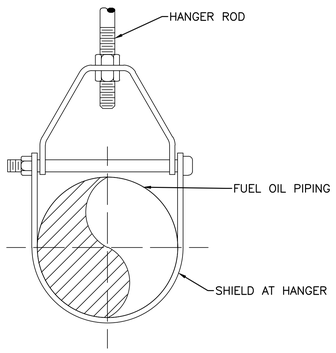

3 ADJUSTABLE CLEVIS HANGER TYPE 1 DETAIL

M-501 SCALE:NOT TO SCALE

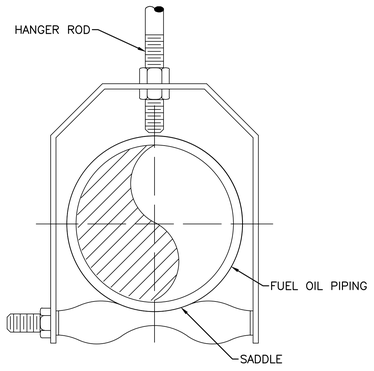

4 ADJUSTABLE CLEVIS HANGER TYPE 43 DETAIL

M-501 SCALE:NOT TO SCALE

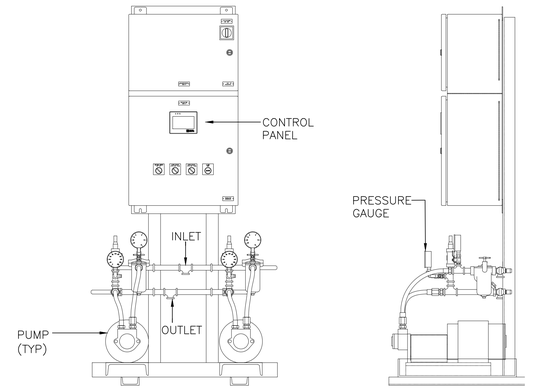

NOTE: INTERIOR OF REQUIRED PUMP SET ENCLOSURE SHOWN IN DETAIL.

5 TYPICAL DUPLEX PUMP DETAILS

M-501 SCALE:NOT TO SCALE

ALL PROVIDED PIPE HANGERS SHALL BE SPACED IN ACCORDANCE WITH THE BELOW MAXIMUM PIPE/TUBING SUPPORT SPACING DETAIL.

MAXIMUM PIPE/TUBING SUPPORT SPACING

NOM. SIZE		THRU 20 [THRU ¾]	25 [1]	32 [1¼]	40 [1½]	50 [2]	65 [2½]	75 [3]	100 [4]	125 [5]	150 [6]	200 [8]	250 [10]	300 [12]	350 [14]	400 [16]	450 [18]	500 [20]	600 [24]
PIPE	mm	2100	2100	2100	2700	3000	3400	3700	4100	4900	5200	5800	6700	7000	7600	8200	8500	9100	9600
	[FT]	[7]	[7]	[7]	[9]	[10]	[11]	[12]	[14]	[16]	[17]	[19]	[22]	[23]	[25]	[27]	[28]	[30]	[32]
TUBING	mm	1500	1800	2100	2400	2400	2700	3000	3700	4000	4100	4900	–	–	–	–	–	–	–
	[FT]	[5]	[6]	[7]	[8]	[8]	[9]	[10]	[12]	[13]	[14]	[16]	–	–	–	–	–	–	–

NOTE: FOR TRAPEZE HANGER TAKE SPACING OF SMALLEST SIZE ON TRAPEZE.

Revisions:	Date:

CONSULTANT

ARCHITECT/ENGINEER OF RECORD

NEI Northeast Infrastructure, LLC
34 BROWN STREET
HONESDALE, PA 18431
OFFICE : (570) 253-0846
WWW.NEINFRA.COM

STAMP

COMMONWEALTH OF PENNSYLVANIA REGISTERED PROFESSIONAL DAVID L. ELLIOTT No. PE045114E

Office of Construction and Facilities Management

VA U.S. Department of Veterans Affairs

Drawing Title: MECHANICAL DETAILS 2	Phase: BID DOCUMENTS
Approved: Project Director: VA SIERRA PACIFIC NETWORK (VISN 21) VA NORTHERN CALIFORNIA HEALTHCARE SYSTEM	
Project Title: CORRECT MARTINEZ & MARE ISLAND GENERATOR FUEL LINES	Project Number: 612-23-005
	Building Number: N/A
Location: 150 MUIR ROAD MARTINEZ, CA 94553 / 201 WALNUT AVENUE MARE ISLAND, CA 94592	Drawing Number: M-501
Issue Date: 04/17/2026	Checked: D.L.E. / Drawn: J.R.H.

File Path: 6/14/2009 12:39:03 PM

VA FORM 08 - 6231

FUEL PUMP SCHEDULE

MARK	LOCATION	SYSTEM AND/OR SERVICE	TYPE	CAPACITY GPH [L/s]		DISCHARGE PRESS		OIL GRADE	OIL TEMP		VISCOSITY RANGE (SSU)	SUCTION LIFT		MOTOR				REMARKS
				GPH	[L/H]	PSIG	[kPa]		°F	[°C]		IN HG	[mm]	HP	[W]	PHASE	VOLT	
P-1	MARTINEZ BUILDING 19	PART OF DUPLEX PUMP SET SUPPLYING EMERGENCY GENERATOR	BI-ROTATIONAL, POSITIVE DISPLACEMENT	69	[261]	50	[350]	#2	60	[16]	45	11.03	280	0.5	[370]	3	208	P-1 AND P-2 MAKE UP MARTINEZ BUILDING 19 DUPLEX PUMP SET, FUEL OIL PUMP ENCLOSURE SHALL INCLUDE LEAK DETECTION SENSOR THAT CAN BE INTEGRATED INTO LEAK DETECTION SYSTEM AND BMS
P-2	MARTINEZ BUILDING 19	PART OF DUPLEX PUMP SET SUPPLYING EMERGENCY GENERATOR	BI-ROTATIONAL, POSITIVE DISPLACEMENT	69	[261]	50	[350]	#2	60	[16]	45	11.03	280	0.5	[370]	3	208	P-1 AND P-2 MAKE UP MARTINEZ BUILDING 19 DUPLEX PUMP SET, FUEL OIL PUMP ENCLOSURE SHALL INCLUDE LEAK DETECTION SENSOR THAT CAN BE INTEGRATED INTO LEAK DETECTION SYSTEM AND BMS
P-5	MARTINEZ BUILDING 20	PART OF DUPLEX PUMP SET SUPPLYING EMERGENCY GENERATOR	BI-ROTATIONAL, POSITIVE DISPLACEMENT	64.6	[244.5]	50	[350]	#2	60	[16]	45	11.03	280	0.5	[370]	3	208	P-5 AND P-6 MAKE UP MARTINEZ BUILDING 20 DUPLEX PUMP SET, FUEL OIL PUMP ENCLOSURE SHALL INCLUDE LEAK DETECTION SENSOR THAT CAN BE INTEGRATED INTO LEAK DETECTION SYSTEM AND BMS
P-6	MARTINEZ BUILDING 20	PART OF DUPLEX PUMP SET SUPPLYING EMERGENCY GENERATOR	BI-ROTATIONAL, POSITIVE DISPLACEMENT	64.6	[244.5]	50	[350]	#2	60	[16]	45	11.03	280	0.5	[370]	3	208	P-5 AND P-6 MAKE UP MARTINEZ BUILDING 20 DUPLEX PUMP SET, FUEL OIL PUMP ENCLOSURE SHALL INCLUDE LEAK DETECTION SENSOR THAT CAN BE INTEGRATED INTO LEAK DETECTION SYSTEM AND BMS
P-9	MARE ISLAND	PART OF DUPLEX PUMP SET SUPPLYING EMERGENCY GENERATOR	BI-ROTATIONAL, POSITIVE DISPLACEMENT	36.6	[138.5]	50	[350]	#2	60	[16]	45	11.03	280	0.5	[370]	3	208	P-9 AND P-10 MAKE UP MARE ISLAND DUPLEX PUMP SET, FUEL OIL PUMP ENCLOSURE SHALL INCLUDE LEAK DETECTION SENSOR THAT CAN BE INTEGRATED INTO LEAK DETECTION SYSTEM AND BMS
P-10	MARE ISLAND	PART OF DUPLEX PUMP SET SUPPLYING EMERGENCY GENERATOR	BI-ROTATIONAL, POSITIVE DISPLACEMENT	36.6	[138.5]	50	[350]	#2	60	[16]	45	11.03	280	0.5	[370]	3	208	P-9 AND P-10 MAKE UP MARE ISLAND DUPLEX PUMP SET, FUEL OIL PUMP ENCLOSURE SHALL INCLUDE LEAK DETECTION SENSOR THAT CAN BE INTEGRATED INTO LEAK DETECTION SYSTEM AND BMS
P-11	MARE ISLAND	SINGLE EMERGENCY GENERATOR RETURN	BI-ROTATIONAL, POSITIVE DISPLACEMENT	36.6	[138.5]	50	[350]	#2	60	[16]	45	11.03	280	0.5	[370]	3	208	PUMP SHALL BE PROVIDED WITH NEMA ENCLOSURE, FUEL OIL PUMP ENCLOSURE SHALL INCLUDE LEAK DETECTION SENSOR THAT CAN BE INTEGRATED INTO LEAK DETECTION SYSTEM AND BMS

FUEL POLISHER SCHEDULE

MARK	LOCATION	BASIS OF DESIGN OR APPROVED EQUAL	CAPACITY GPH [L/s]		DISCHARGE PRESS		OIL GRADE	OIL TEMP		VISCOSITY RANGE (SSU)	TANK TURNOVER TIME	MOTOR					REMARKS
			GPH	[L/H]	PSIG	[kPa]		°F	[°C]		HOURS	HP	[W]	PHASE	RPM	VOLT	
FP-1	MARTINEZ BUILDING 20	PREFERRED UTILITIES MFG CORPORATION PF-505-RB	1200	[4542]	25	[170]	#2	60	[16]	45	5	0.75	[560]	1	1725	115V	FUEL FILTRATION SYSTEM SHALL INCLUDE WEATHERPROOF ENCLOSURE, FUEL FILTRATION SYSTEM ENCLOSURE SHALL INCLUDE LEAK DETECTION SENSOR THAT CAN BE INTEGRATED INTO LEAK DETECTION SYSTEM AND BMS

LEAK DETECTION & AUTOMATIC TANK GAUGE MONITORING SYSTEM

MARK	EQUIPMENT	SYSTEM SERVED	BASIS OF DESIGN OR APPROVED EQUAL	VA FACILITY	BUILDING	ROOM	REMARKS	SHEET #
LDS-1	AUTOMATIC TANK GAUGE & LEAK DETECTION USER INTERFACE	BUILDING 19 GENERATOR FUEL DELIVERY SYSTEM	VEEDER-ROOT TLS-450 PLUS	MARTINEZ	19	GENERATOR ROOM	1,2,3,4,5,6	MP-100
LDS-2	AUTOMATIC TANK GAUGE & LEAK DETECTION USER INTERFACE	BUILDING 20 GENERATOR FUEL DELIVERY SYSTEM	VEEDER-ROOT TLS-450 PLUS	MARTINEZ	20	GENERATOR ROOM	1,2,3,4,5,6	MP-105
LDS-3	AUTOMATIC TANK GAUGE & LEAK DETECTION USER INTERFACE	MARE ISLAND GENERATOR FUEL DELIVERY SYSTEM	VEEDER-ROOT TLS-450 PLUS	MARE ISLAND	GENERATOR ENCLOSURE	GENERATOR ENCLOSURE	1,2,3,4,5,6	MP-108

REMARKS

1. PROVIDE BACNET GATEWAY DEVICE BASIS OF DESIGN "VEEDER-ROOT QUICKSERVER MODBUS/BACNET GATEWAY" OR APPROVED EQUAL
2. PROVIDE INFORMATION MANAGEMENT PANEL "BASIS OF DESIGN VEEDER-ROOT INFORMATION MANAGEMENT PANEL" OR APPROVED EQUAL
3. CONNECT ALL EXISTING LEAK DETECTION SENSORS TO INFORMATION MANAGEMENT PANEL
4. PROVIDE LEAK DETECTION SENSORS AND ALL ASSOCIATED CONDUIT, CABLING, AND CONDUCTORS AS INDICATED ON DRAWINGS AND CONTROLS DIAGRAMS. CONNECT TO INFORMATION MANAGEMENT PANEL
5. CONNECT BACNET GATEWAY DEVICE TO THE EXISTING JOHNSON CONTROLS METASYS BUILDING MANAGAMENT SYSTEM NETWORK.
6. CONTRACTOR SHALL RETAIN JOHNSON CONTROLS FOR ALL PROGRAMMING AND INTEGRATION INTO EXISTING BUILDING MANAGAMENT SYSTEM.

6/14/2009 12:39:03 PM

Revisions:	Date:

CONSULTANT

ARCHITECT/ENGINEER OF RECORD

NEI Northeast Infrastructure, LLC
34 BROWN STREET
HONESDALE, PA 18431
OFFICE : (570) 253-0846
WWW.NEINFRA.COM

STAMP

COMMONWEALTH OF PENNSYLVANIA REGISTERED PROFESSIONAL ENGINEER PE045114E

Office of Construction and Facilities Management

VA U.S. Department of Veterans Affairs

Drawing Title: MECHANICAL SCHEDULES

Phase: BID DOCUMENTS

Project Title: CORRECT MARTINEZ & MARE ISLAND GENERATOR FUEL LINES

Project Number: 612-23-005

Building Number: N/A

Approved: Project Director: VA SIERRA PACIFIC NETWORK (VISN 21) VA NORTHERN CALIFORNIA HEALTHCARE SYSTEM

Location: 150 MUIR ROAD MARTINEZ, CA 94553 — 201 WALNUT AVENUE MARE ISLAND, CA 94592

Issue Date: 04/17/2026

Checked: D.L.E.

Drawn: F.R.O.

Drawing Number: M-600

File Path

VA FORM 08 - 6231

ABBREVIATIONS

AMP/A	AMPERE
AC.	ALTERNATING CURRENT
A/C.	AIR CONDITION
AFF	ABOVE FINISHED FLOOR
AFG	ABOVE FINISHED GRADE
A.I.C.	AMPERES INTERRUPTING CAPACITY
AL	ALUMINUM
ARCH	ARCHITECTURAL
A.R.F.	ABOVE RAISED FLOOR
ASY	ASYMMETRICAL
A.T.C.	AUTOMATIC TEMPERATURE CONTROL
A.T.S.	AUTOMATIC TRANSFER SWITCH
AUX.	AUXILIARY
B.F.C.	BELOW FINISHED CEILING
BLDG.	BUILDING
BKR	BREAKER
BSMT.	BASEMENT
.C.	CENTIGRADE DEGREES
CLG.	CEILING
CKT.	CIRCUIT
CB	CIRCUIT BREAKER
CW	CLOCKWISE
COL.	COLUMN
CONC.	CONCRETE
CCTV	CLOSED CIRCUIT TELEVISION
C.	CONDUIT
CONDR.	CONDUCTOR
CU. FT.	CUBIC FEET
CONTR.	CONTRACTOR
CU.	COPPER
CONST.	CONSTRUCTION
COAX.	COAXIAL
COORD.	COORDINATE
CONT.	CONTINUATION
C.T.	CURRENT TRANSFORMER
DISC.	DISCONNECT SWITCH
DIV.	DIVISION
DN.	DOWN
EA.	EACH
E.F.	EXHAUST FAN
ELEC. CL.	ELECTRICAL CLOSET
ELEC.	ELECTRICAL
E.C.	ELECTRICAL CONTRACTOR
ELEV/EL.	ELEVATION/ELEVATOR
E.M.T.	ELECTRICAL METALLIC TUBING
ENT.	ENTRANCE
ENCL.	ENCLOSURE
EQ.	EQUAL
EQUIP.	EQUIPMENT
E.W.	EACH WAY
EXT.	EXTERNAL/EXTERIOR
F.A.	FIRE ALARM
.F.	FAHRENHEIT DEGREES
FC	FOOTCANDLE
FT.	FEET
F.E.	FIRE EXTINGUISHER
FDN.	FOUNDATION
FIN.	FINISH/FINISHED
FIXT.	FIXTURE
FLEX.	FLEXIBLE
FL.	FLOOR
FLA	FULL LOAD AMPERES
FLUOR.	FLUORESCENT
GA.	GAGE/GAUGE
GALV.	GALVANIZED
G.C.	GENERAL CONTRACTOR
GEN.	GENERATOR
GND.	GROUND
G.F.I./G.F.C.I.	GROUND FAULT INTERRUPTER
G.F.E.P.D.	GROUND FAULT EQUIPMENT PROTECTOR DEVICE
G.R.S.C.	GALVANIZED RIGID STEEL CONDUIT
HT.	HEIGHT
H.I.D.	HIGH INTENSITY DISCHARGE
HORIZ.	HORIZONTAL
H.O.A.	HAND OFF AUTO
HP.	HORSEPOWER
H.P.S.	HIGH PRESSURE SODIUM
HZ.	HERTZ
INC.	INCANDESCENT
IMC	INTERMEDIATE CONDUIT
ISOL.	ISOLATED
INSUL.	INSULATION/INSULATED
JB	JUNCTION BOX
KHZ	KILOHERTZ
KW	KILOWATT
KWH	KILOWATT HOUR
KVA	KILOVOLT–AMPERE
KVAR	KILOVAR
KV	KILOVOLT

LAN	LOCAL AREA NETWORK
LG.	LENGTH
LF	LINEAR FEET
LT	LIGHT
LTG	LIGHTING
LRA	LOCKED ROTOR AMPERES
LG	LONG
MCC	MOTOR CONTROL CENTER
M.C.	MECHANICAL CONTRACTOR
MCB	MAIN CIRCUIT BREAKER
M/C	MULTI–CONDUCTOR
MDS	MAIN DISTRIBUTION SWITCHBOARD
MDP	MAIN DISTRIBUTION PANEL
MANUF.	MANUFACTURER
MF	MAINTENANCE FACTOR
MAX.	MAXIMUM
MB	MAIN BREAKER
MECH.	MECHANICAL
MCM	THOUSAND CIRCULAR MILLS
MG	MOTOR GENERATOR
MTD.	MOUNTED
MIN.	MINIMUM
MLO	MAIN LUGS ONLY
N.	NEUTRAL
NC	NORMALLY CLOSED
NEC	NATIONAL ELECTRICAL CODE
NEMA	NATIONAL ELECTRICAL MANUFACTURERS ASSOCIATION
NIC	NOT IN CONTRACT
NO	NORMALLY OPEN
NTS	NOT TO SCALE
No./#	NUMBER
%	PERCENT
ϕ	PHASE
PVC	POLYVINYLCHLORIDE
PB	PULL BOX
PNL.	PANELBOARD
P.C.	PLUMBING CONTRACTOR
PRI.	PRIMARY
R.	RADIUS
RF	RADIO FREQUENCY
REBAR.	REINFORCING BAR
RECEPT.	RECEPTACLE
REQ'D	REQUIRED
REV.	REVISE/REVISION
REC.	RECESSED
R.SW.	REMOTE CONTROL SWITCH
RGS	RIGID GALVANIZED STEEL CONDUIT
SECT.	SECTION
SEC.	SECONDARY
SERV.	SERVICE
1/C	SINGLE CONDUCTOR
SK.	SKETCH
SPECS.	SPECIFICATIONS
SQ.	SQUARE
S.F.	SQUARE FEET
STA.	STATION
SW.	SWITCH
S.S.	STAINLESS STEEL
SW'BD	SWITCHBOARD
SYM.	SYMMETRICAL
SUSP.	SUSPENDED
SEP.	SEPARATE
SHT.	SHEET
SIG.	SIGNAL
SN	SOLID NEUTRAL
SURF.	SURFACE
THRU	THROUGH
TEL.	TELEPHONE
TRANSF./XFMR	TRANSFORMER
TYP.	TYPICAL
U.O.N.	UNLESS OTHERWISE NOTED
U.R.F.	UNDER RAISED FLOOR
VS.	VERSUS
VERT.	VERTICAL
VD	VOLTAGE DROP
V.	VOLTAGE/VOLTS
WP	WEATHERPROOF
WD.	WIDE
W/	WITH
W/O	WITHOUT
W/I	WROUGHT IRON
WPG	WEATHERPROOF GROUND FAULT CIRCUIT INTERRUPTER

NOTE: NOT ALL SYMBOLS AND ABBREVIATIONS USED.

GENERAL

- DEMOLITION
- NEW WORK
- EXISTING
- LOW VOLTAGE CONTROL WIRING AND CONDUIT

POWER

- PANELBOARD (HATCHING INDICATES VOLTAGE)
- 208/120V HATCHING
- 480/277V HATCHING
- T — TRANSFORMER
- CONTROL PANEL/JUNCTION BOX/ENCLOSURE (AS NOTED)
- EXISTING ELECTRICAL
- CONDUIT DROPS
- FUSED DISCONNECT
- P — PULL BOX, SIZE PER N.E.C. ARTICLE 314
- M — MOTOR CONNECTION
- # / # — EQUIPMENT TAG
- DUPLEX WEATHER PROOF WHILE IN USE GFCI RECEPTACLE
- SINGLE WEATHER PROOF WHILE IN USE GFCI RECEPTACLE
- S — MOTOR STARTER SWITCH
- CONDUIT SWEEP
- LIGHT FIXTURE
- VFD — VARIABLE FREQUENCY DRIVE
- MCC — MOTOR CONTROL CENTER
- XX–XX (CIRCUIT DESIGNATION)

ONE–LINE

- EXISTING ENCLOSURE
- DEMOLISHED CONDUCTORS
- EXISTING CONDUCTOR
- EXISTING CIRCUIT BREAKER
- EXISTING BUS BAR
- EXISTING ATS/MTS
- NEW WORK CONDUCTOR
- NEW WORK CIRCUIT BREAKER
- PROPOSED BUS BAR
- NEW WORK ATS/MTS (WITH BYPASS)
- SPLICE CONNECTION
- TRANSFORMER
- M — MOTOR OPERATOR
- GROUND
- TAP BOX
- DISCONNECT
- UTILITY
- M — METER
- G — GENERATOR
- XXX / XXXA — FUSED DISCONNECT
- ENCLOSED CIRCUIT BREAKER

GENERAL NOTES

1. NO LIVE ELECTRICAL WORK IS PERMITTED. ALL ELECTRICAL SHUT DOWNS FOR CONNECTIONS MUST BE REQUESTED AND COORDINATED 2 WEEKS IN ADVANCE.
2. NOT ALL SYMBOLS AND ABBREVIATIONS ARE USED.
3. ALL INSTALLATIONS SHALL MEET ALL REQUIREMENTS OF THE LATEST VERSION OF THE VA ELECTRICAL DESIGN MANUAL AND NEC.
4. AIC RATING OF THE PROVIDED CIRCUIT BREAKERS SHALL AT A MINIMUM MATCH THE AIC RATING OF THE PANEL IN WHICH IT IS INSTALLED.
5. AIC RATING SHALL MEET OR EXCEED SOURCE EQUIPMENT.
6. ALL EQUIPMENT SHALL COMPLY WITH THE REQUIREMENTS OF THE NATIONAL ELECTRICAL CODE (NEC). INSTALLATION SHALL INCLUDE, BUT NOT BE LIMITED TO, MAINTAINING REQUIRED WORKING CLEARANCES, DEDICATED EQUIPMENT SPACE, AND ACCESS IN ACCORDANCE WITH NEC ARTICLE 110.26 AND ALL OTHER APPLICABLE NEC ARTICLES. CONTRACTOR SHALL COORDINATE EQUIPMENT LOCATIONS AND INSTALLATION TO ENSURE FULL CODE COMPLIANCE.
7. THE CONTRACTOR SHALL BE RESPONSIBLE FOR FINAL COORDINATION WITH THE SELECTED MOTORS AND ASSOCIATED EQUIPMENT TO VERIFY PROPER OVERCURRENT PROTECTIVE DEVICE (OCPD) SIZING, CONDUCTOR SIZING, AND EQUIPMENT SELECTION. ALL INSTALLATIONS SHALL BE PER MANUFACTUERER'S INSTALLATION INSTRUCTIONS.

ELECTRICAL DEMOLITION NOTES

1. REMOVE ALL OBSOLETE ELECTRICAL EQUIPMENT, FIXTURES, CONDUIT, WIRING, CONTROLS, HANGERS, PADS, AND SUPPORTS UNLESS OTHERWISE INDICATED TO REMAIN. DISCONNECT CIRCUIT AND WIRING FROM EQUIPMENT WHICH IS TO BE REMOVED BY OTHERS. WIRING MADE OBSOLETE BY THE NEW CONSTRUCTION SHALL BE REMOVED. CONDUIT MADE OBSOLETE BY THE NEW CONSTRUCTION SHALL BE REMOVED OR SECURELY SEALED AND CAPPED ABOVE CEILINGS, BELOW FLOORS, GRADE OR IN WALLS SO THAT IT IS COMPLETELY CONCEALED AT THE COMPLETION OF THE PROJECT. PIPING AND WIRING REMOVED FROM THE EXISTING ELECTRICAL SYSTEMS SHALL NOT BE USED IN THE INSTALLATION OF THE NEW SYSTEMS.
2. DEMOLITION INCLUDES, BUT IS NOT LIMITED TO, REMOVAL AND LEGAL DISPOSAL OF EQUIPMENT AND SYSTEMS MADE OBSOLETE AND/OR REPLACED BY NEW WORK. DEMOLITION INCLUDES RELOCATION OR REINSTALLATION, DISCONNECTIONS AND RECONNECTIONS OF SERVICES, SUPPORTS, AND SUBSEQUENT FINAL SUPPORTS, TEMPORARY CAPPING, AND REROUTING OF TEMPORARY SERVICES TO PERMIT NEW OR RENOVATION WORK TO PROCEED.
3. THE DEMOLITION WORK INDICATED ON THE DRAWING IS INTENDED TO ASSIST THE CONTRACTOR AND GIVE GENERAL INFORMATION. NOT ALL DEMOLITION OR TEMPORARY CONNECTIONS ARE SHOWN. PRIOR TO SUBMITTING BID, THE CONTRACTOR SHALL VISIT THE PROJECT SITE AND REVIEW ORIGINAL DRAWINGS IF AVAILABLE. CONTRACTOR IS RESPONSIBLE TO DETERMINE THE FULL EXTENT OF DEMOLITION, AND INCLUDE ALL REQUIRED DEMOLITION WORK IN HIS BID, WHETHER OR NOT SPECIFICALLY SHOWN ON DRAWINGS. NO ADDITIONAL COST WILL BE GRANTED FOR DEMOLITION. LEGALLY DISPOSE OF ALL ITEMS AND MATERIALS, EXCEPT ANY ITEMS SPECIFICALLY DESIGNATED BY THE OWNER TO BE SALVAGED. REMOVE AND REPLACE THE DESIGNATED SALVAGED EQUIPMENT IN A LOCATION DIRECTED BY THE OWNER AT NO ADDITIONAL EXPENSE.
4. MAINTAIN CONTINUITY OF EXISTING CIRCUITS FOR EQUIPMENT AND DEVICES TO REMAIN. IF A DEVICE OR EQUIPMENT IS REMOVED AND IS PART OF AN EXISTING CIRCUIT TO REMAIN, THE CIRCUIT SHALL BE RESTORED TO IT'S ORIGINAL CONDITION.
5. IN ALL AREAS WHERE PATCHING IS REQUIRED THE CONTRACTOR IS RESPONSIBLE FOR PATCHING THE ASSOCIATED AREA. CONTRACTOR SHALL FINISH SURFACE TO MATCH EXISTING. FINISHES AND MATERIALS SHALL BE SUBMITTED TO THE VA COR FOR APPROVAL.

Revisions:	Date:

CONSULTANT

ARCHITECT/ENGINEER OF RECORD

NEI Northeast Infrastructure, LLC
34 BROWN STREET
HONESDALE, PA 18431
OFFICE : (570) 253-0846
WWW.NEINFRA.COM

STAMP

REGISTERED PROFESSIONAL ENGINEER — No. PE045114E

Office of Construction and Facilities Management

VA U.S. Department of Veterans Affairs

Drawing Title	GENERAL ELECTRICAL SYMBOLS, NOTES & ABBREVIATIONS
Phase	BID DOCUMENTS
Project Title	CORRECT MARTINEZ & MARE ISLAND GENERATOR FUEL LINES
Project Number	612-23-005
Building Number	N/A
Approved: Project Director	VA SIERRA PACIFIC NETWORK (VISN 21) VA NORTHERN CALIFORNIA HEALTHCARE SYSTEM
Location	150 MUIR ROAD MARTINEZ, CA 94553 — 201 WALNUT AVENUE MARE ISLAND, CA 94592
Issue Date	04/17/2026
Checked	D.L.E.
Drawn	K.E.B.
Drawing Number	E-001

File Path: 6/14/2009 12:39:03 PM

VA FORM 08 - 6231

GENERAL NOTE

1. SEE 'EGEN' PANEL SCHEDULE ON SHEET E-600 FOR ASSOCIATED CIRCUITING.

ELECTRICAL LINETYPE LEGEND	
—— UE3 ——	(3) 2" PVC CONDUITS FOR UNDERGROUND
—— E ——	(1) 3/4" PVC CONDUIT FOR ABOVE GROUND

GENERAL DEMOLITION NOTE

1. DEMOLISH ALL ASSOCIATED CIRCUITING TO SOURCE DISTRIBUTION PANEL. THIS INCLUDES BUT IS NOT LIMITED TO, CONDUIT, CONDUCTORS, AND ASSOCIATED MEANS OF DISCONNECT.

KEYED DEMOLITION NOTES

- [A] FUEL PUMP CONTROLLER TO BE DEMOLISHED. REMOVE ALL CONDUIT, CONDUCTORS AND ASSOCIATED MATERIALS TO SOURCE PANELBOARD.
- [B] LEAK DETECTION SENSOR TO BE DEMOLISHED. DEMOLISH ASSOCIATED MEANS OF DISCONNECT, CONDUIT AND CONDUCTORS TO SOURCE PANELBOARD.
- [C] LEAK DETECTION SYSTEM CONTROLLER TO BE DEMOLISHED. DEMOLISH ASSOCIATED MEANS OF DISCONNECT, CONDUIT AND CONDUCTORS TO SOURCE PANELBOARD.

KEYED NOTES

1. CONTROL PANEL SHALL BE PROVIDED WITH LOCKABLE MEANS OF DISCONNECT.
2. SEE PANEL SCHEDULE FOR ABOVE GRADE CONDUIT SIZING.
3. LEAK DETECTION SYSTEM CONTROLLER. PROVIDE ASSOCIATED CONDUCTORS AND CONDUIT TO PANEL EGEN. PROVIDE LOCKABLE MEANS OF DISCONNECT. SEE PANEL SCHEDULE ON E-600.
4. STANDARD CONTROL PANEL ASSEMBLY. PROVIDE ASSOCIATED CONDUCTORS AND CONDUIT TO PANEL EGEN. PROVIDE LOCKABLE MEANS OF DISCONNECT. SEE PANEL SCHEDULE ON E-600.
5. LINE LEAK DETECTION SENSOR INTERFACE MODULE. PROVIDE ASSOCIATED CONDUCTORS AND CONDUIT TO PANEL EGEN. PROVIDE LOCKABLE MEANS OF DISCONNECT. SEE PANEL SCHEDULE ON E-600.

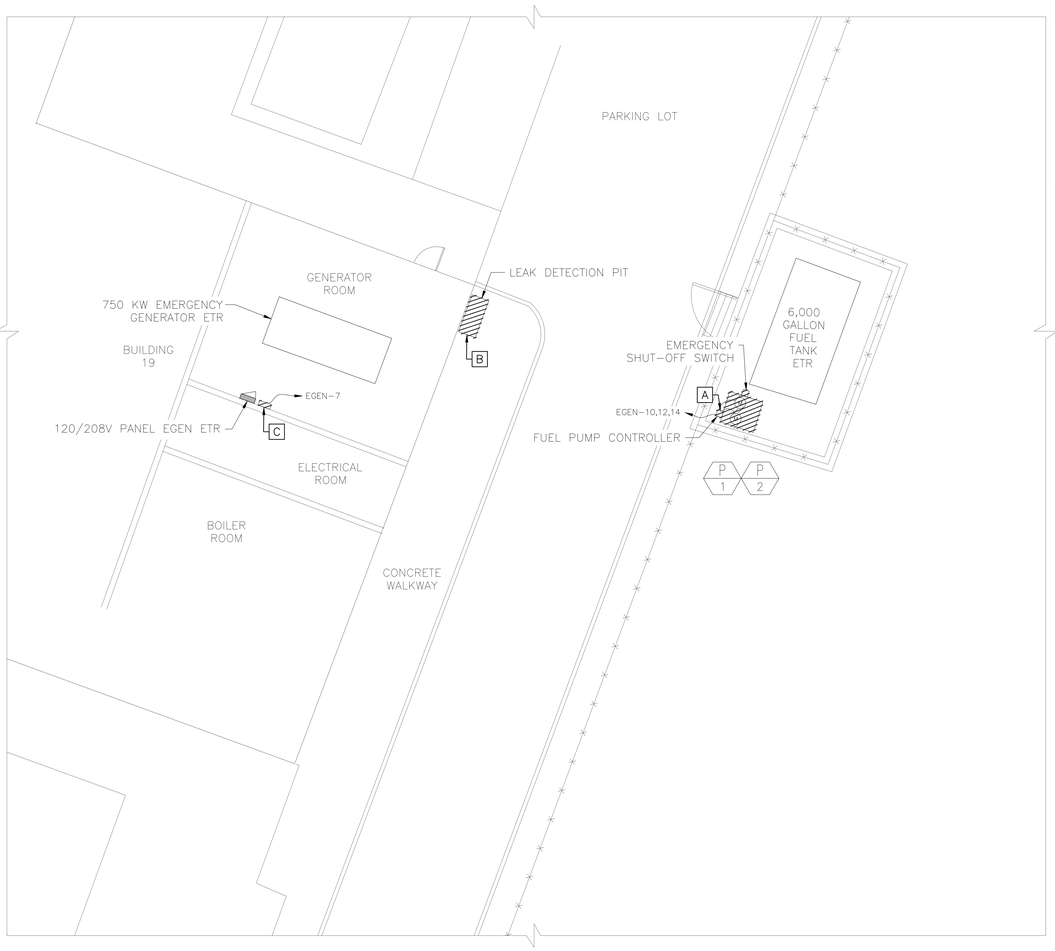

N

1 EP-100

MARTINEZ BUILDING 19
ELECTRICAL DEMOLITION PLAN

SCALE: 1/8"=1'-0"

0 6 12 18 24 FT

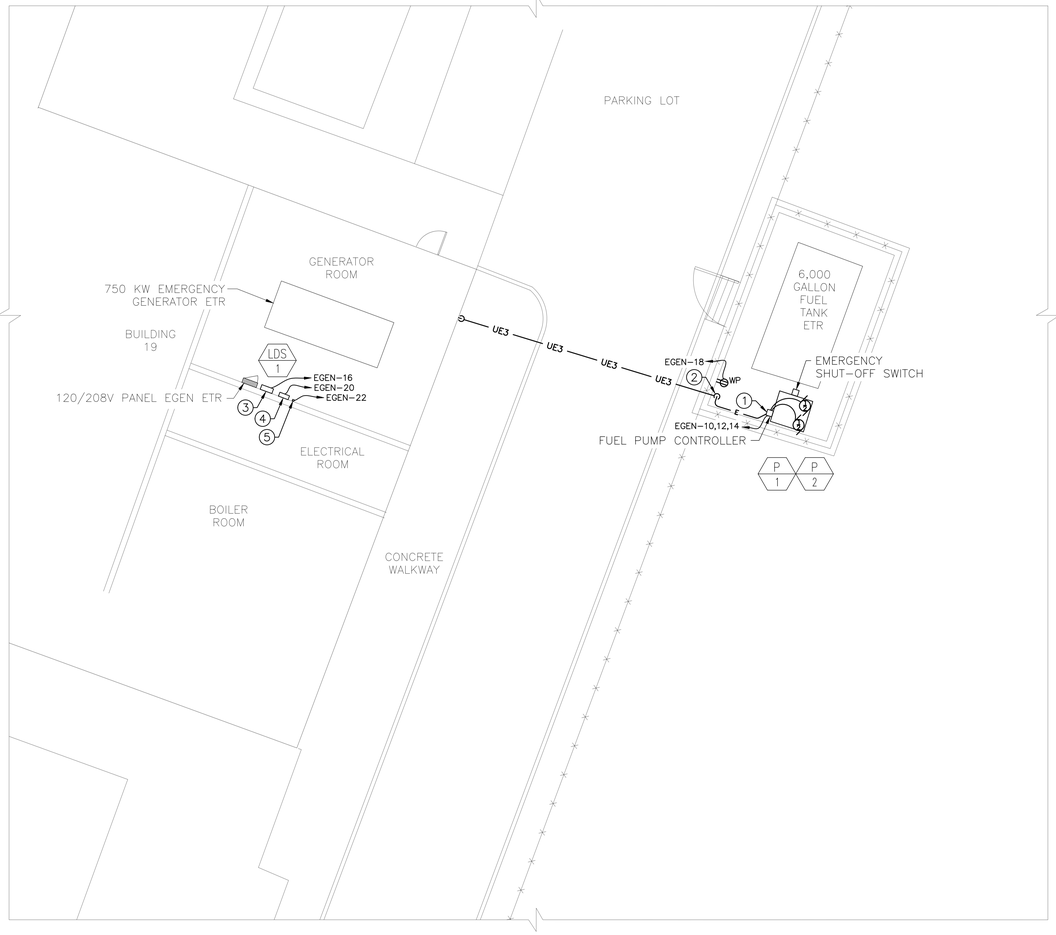

N

2 EP-100

MARTINEZ BUILDING 19
ELECTRICAL NEW WORK PLAN

SCALE: 1/8"=1'-0"

0 6 12 18 24 FT

Revisions:	Date:

CONSULTANT

ARCHITECT/ENGINEER OF RECORD

NEI Northeast Infrastructure, LLC

34 BROWN STREET
HONESDALE, PA 18431

OFFICE : (570) 253-0846
WWW.NEINFRA.COM

STAMP

Office of Construction and Facilities Management

VA U.S. Department of Veterans Affairs

Drawing Title: MARTINEZ BUILDING 19 ELECTRICAL PLANS

Phase: BID DOCUMENTS

Project Title: CORRECT MARTINEZ & MARE ISLAND GENERATOR FUEL LINES

Project Number: 612-23-005

Building Number: N/A

Approved: Project Director: VA SIERRA PACIFIC NETWORK (VISN 21) VA NORTHERN CALIFORNIA HEALTHCARE SYSTEM

Location: 150 MUIR ROAD MARTINEZ, CA 94553 — 201 WALNUT AVENUE MARE ISLAND, CA 94592

Issue Date: 04/17/2026

Checked: D.L.E.

Drawn: K.E.B.

Drawing Number: EP-100

File Path: 6/14/2009 12:39:03 PM

VA FORM 08 - 6231

GENERAL DEMOLITION NOTE

1. DEMOLISH ALL ASSOCIATED CIRCUITING TO SOURCE DISTRIBUTION PANEL. THIS INCLUDES BUT IS NOT LIMITED TO, CONDUIT, CONDUCTORS, AND ASSOCIATED MEANS OF DISCONNECT.

KEYED DEMOLITION NOTES

A. FUEL PUMP CONTROLLER TO BE DEMOLISHED. REMOVE ALL CONDUIT, CONDUCTORS AND ASSOCIATED MATERIALS TO SOURCE PANELBOARD.

B. LEAK DETECTION SENSOR TO BE DEMOLISHED. DEMOLISH ASSOCIATED MEANS OF DISCONNECT, CONDUIT AND CONDUCTORS TO SOURCE PANELBOARD.

C. LEAK DETECTION SYSTEM CONTROLLER TO BE DEMOLISHED. DEMOLISH ASSOCIATED MEANS OF DISCONNECT, CONDUIT AND CONDUCTORS TO SOURCE PANELBOARD.

N

1 / EP-101

MARTINEZ BUILDING 20
ELECTRICAL DEMOLITION PLAN

SCALE: 1/8"=1'-0"

0 6 12 18 24 FT

Revisions:	Date:

CONSULTANT

ARCHITECT/ENGINEER OF RECORD

NEI Northeast Infrastructure, LLC
34 BROWN STREET
HONESDALE, PA 18431
OFFICE : (570) 253-0846
WWW.NEINFRA.COM

STAMP

COMMONWEALTH OF PENNSYLVANIA REGISTERED PROFESSIONAL ENGINEER No. PE045114E

Office of Construction and Facilities Management

VA U.S. Department of Veterans Affairs

Drawing Title: MARTINEZ BUILDING 20 ELECTRICAL DEMOLITION PLAN	Phase: BID DOCUMENTS
Approved: Project Director: VA SIERRA PACIFIC NETWORK (VISN 21) VA NORTHERN CALIFORNIA HEALTHCARE SYSTEM	
Project Title: CORRECT MARTINEZ & MARE ISLAND GENERATOR FUEL LINES	Project Number: 612-23-005
	Building Number: 20
Location: 150 MUIR ROAD MARTINEZ, CA 94553 / 201 WALNUT AVENUE MARE ISLAND, CA 94592	Drawing Number: EP-101
Issue Date: 04/17/2026	Checked: D.L.E.
	Drawn: K.E.B.

6/14/2009 12:28:03 PM

File Path

VA FORM 08 - 6231

GENERAL NOTE

1. SEE 'ELGEN' PANEL SCHEDULE ON SHEET E-600 FOR ASSOCIATED CIRCUITING.

ELECTRICAL LINETYPE LEGEND	
—— UE3 ——	(3) 2" PVC CONDUITS FOR UNDERGROUND
—— E ——	(1) 3/4" PVC CONDUIT FOR ABOVE GROUND

KEYED NOTES

1. CONTROL PANEL SHALL BE PROVIDED WITH LOCKABLE MEANS OF DISCONNECT. ENCLOSURE SHALL BE RATED NEMA 3R.
2. SEE PANEL SCHEDULE FOR ABOVE GRADE CONDUIT SIZING.
3. PROVIDE PULLBOX. SEE DETAILS ON E-500.
4. PROVIDE LEAK DETECTION SYSTEM CONTROLLER AND ASSOCIATED CONDUCTORS AND CONDUIT TO PANEL ELGEN. PROVIDE LOCKABLE MEANS OF DISCONNECT. SEE PANEL SCHEDULE ON E-600.
5. STANDARD CONTROL PANEL ASSEMBLY. PROVIDE ASSOCIATED CONDUCTORS AND CONDUIT TO PANEL ELGEN. PROVIDE LOCKABLE MEANS OF DISCONNECT. SEE PANEL SCHEDULE ON E-600.
6. LINE LEAK DETECTION SENSOR INTERFACE MODULE. PROVIDE ASSOCIATED CONDUCTORS AND CONDUIT TO PANEL ELGEN. PROVIDE LOCKABLE MEANS OF DISCONNECT. SEE PANEL SCHEDULE ON E-600.

N

1
EP-102

MARTINEZ BUILDING 20
ELECTRICAL NEW WORK PLAN

SCALE: 1/8"=1'-0"

0 6 12 18 24 FT

Revisions:	Date:

CONSULTANT

ARCHITECT/ENGINEER OF RECORD

NEI Northeast Infrastructure, LLC
34 BROWN STREET
HONESDALE, PA 18431
OFFICE : (570) 253-0846
WWW.NEINFRA.COM

STAMP

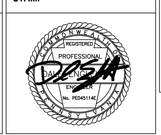

Office of Construction and Facilities Management

VA U.S. Department of Veterans Affairs

Drawing Title	MARTINEZ BUILDING 20 ELECTRICAL NEW WORK PLAN
Phase	BID DOCUMENTS
Project Title	CORRECT MARTINEZ & MARE ISLAND GENERATOR FUEL LINES
Project Number	612-23-005
Building Number	20
Approved: Project Director	VA SIERRA PACIFIC NETWORK (VISN 21) VA NORTHERN CALIFORNIA HEALTHCARE SYSTEM
Location	150 MUIR ROAD, MARTINEZ, CA 94553 201 WALNUT AVENUE, MARE ISLAND, CA 94592
Drawing Number	EP-102
Issue Date	04/17/2026
Checked	D.L.E.
Drawn	K.E.B.

File Path: 6/14/2009 12:39:03 PM

VA FORM 08 - 6231

GENERAL DEMOLITION NOTE

1. DEMOLISH ALL ASSOCIATED CIRCUITING TO SOURCE DISTRIBUTION PANEL. THIS INCLUDES BUT IS NOT LIMITED TO, CONDUIT, CONDUCTORS, AND ASSOCIATED MEANS OF DISCONNECT.

KEYED DEMOLITION NOTES

- [A] DAY TANK PUMP CONTROLLER TO BE DEMOLISHED. REMOVE ALL CONDUIT, CONDUCTORS AND ASSOCIATED MATERIALS TO SOURCE PANELBOARD.
- [B] FUEL PUMP CONTROLLER TO BE DEMOLISHED. REMOVE ALL CONDUIT, CONDUCTORS AND ASSOCIATED MATERIALS TO SOURCE PANELBOARD.
- [C] LEAD PUMP, LAG PUMP AND RETURN PUMP STATUS/TEST DISPLAY TO BE DEMOLISHED. REMOVE ALL CONDUIT, CONDUCTORS AND ASSOCIATED MATERIALS TO SOURCE PANELBOARD.

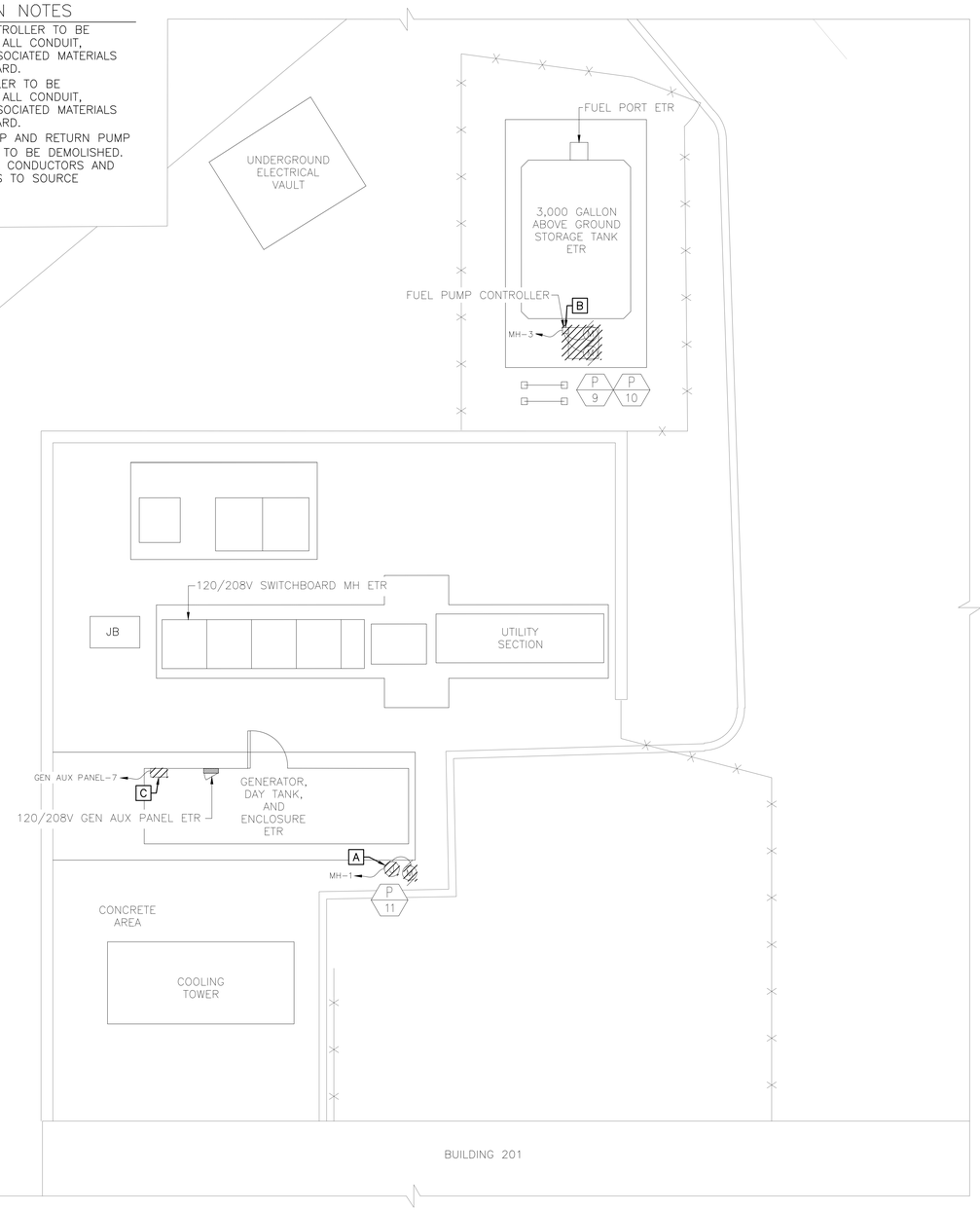

N

1 EP-103

MARE ISLAND ELECTRICAL DEMOLITION PLAN

SCALE: 1/8"=1'-0"

0 6 12 18 24 FT

GENERAL NOTE

1. SEE PANEL SCHEDULES ON SHEET E-601 FOR ASSOCIATED CIRCUITING.

KEYED NOTES

1. CONTROL PANEL SHALL BE RATED NEMA 3R WITH LOCKABLE MEANS OF DISCONNECT FOR ASSOCIATED PUMPS. PROVIDE ALL ASSOCIATED MATERIALS AND CONNECTIONS TO ENSURE A COMPLETE AND OPERATIONAL SYSTEM AT THE COMPLETION OF CONSTROCTIONS. CONTRACTOR SHALL PROVIDE SHOP DRAWINGS INCLUDING ALL ASSOCIATED MATERIALS AND SCHEMATIC WIRING DIAGRAMS SHOWING ASSOCIATED CONNECTIONS REQUIRED
2. SEE ONE-LINE AND PANEL SCHEDULE ON E-601.
3. PROVIDE LEAK DETECTION SYSTEM CONTROLLER AND ASSOCIATED CONDUCTORS AND CONDUIT TO GEN AUX PANEL. PROVIDE LOCKABLE MEANS OF DISCONNECT. SEE PANEL SCHEDULE ON E-601.
4. STANDARD CONTROL PANEL ASSEMBLY. PROVIDE ASSOCIATED CONDUCTORS AND CONDUIT TO GEN AUX PANEL. PROVIDE LOCKABLE MEANS OF DISCONNECT. SEE PANEL SCHEDULE ON E-601.
5. LINE LEAK DETECTION SENSOR INTERFACE MODULE. PROVIDE ASSOCIATED CONDUCTORS AND CONDUIT TO GEN AUX PANEL. PROVIDE LOCKABLE MEANS OF DISCONNECT. SEE PANEL SCHEDULE ON E-601.

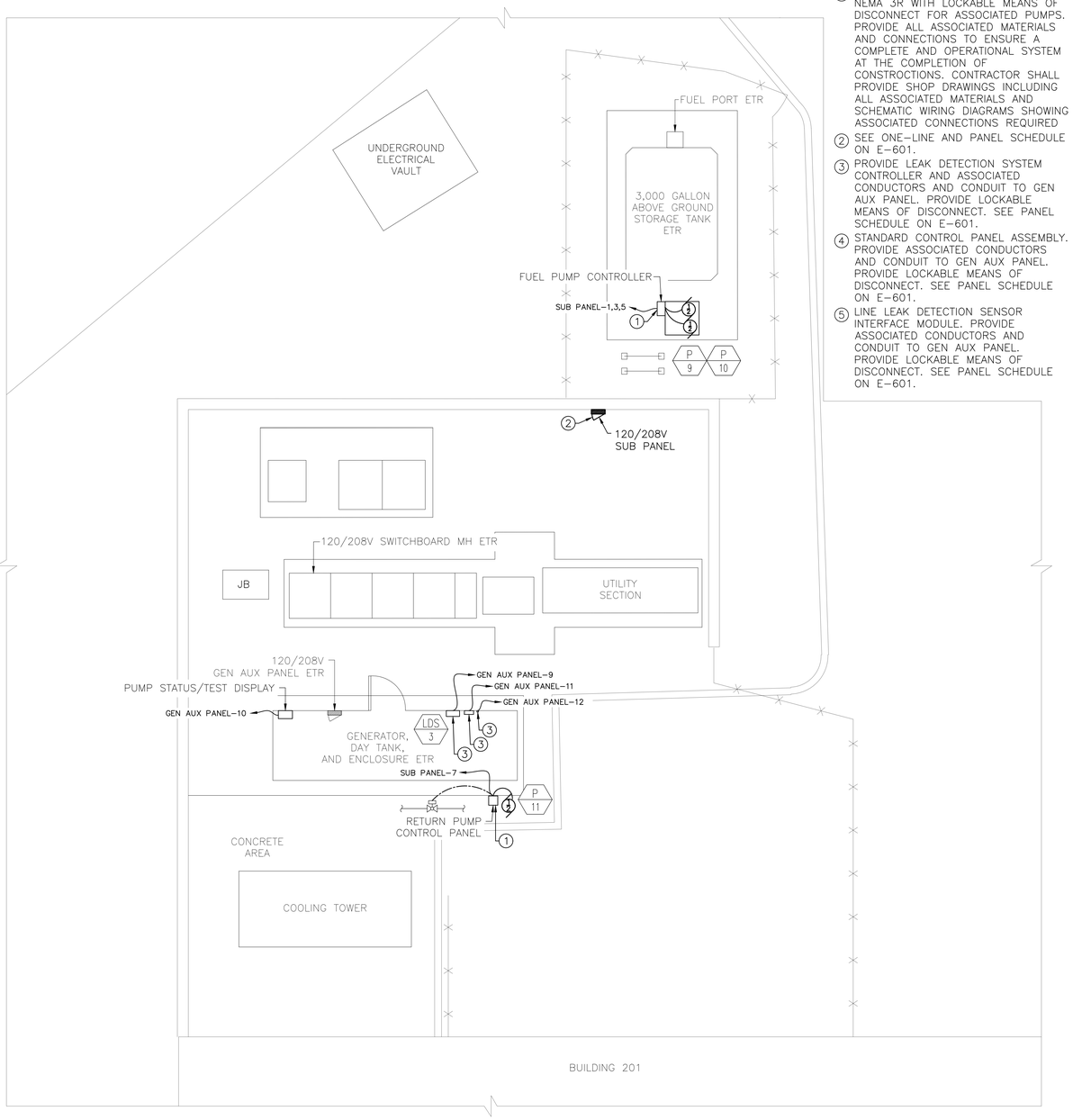

N

2 EP-103

MARE ISLAND ELECTRICAL NEW WORK PLAN

SCALE: 1/8"=1'-0"

0 6 12 18 24 FT

Revisions:	Date:

CONSULTANT

ARCHITECT/ENGINEER OF RECORD

NEI Northeast Infrastructure, LLC
34 BROWN STREET
HONESDALE, PA 18431
OFFICE : (570) 253-0846
WWW.NEINFRA.COM

STAMP

REGISTERED PROFESSIONAL ENGINEER
No. PE045114E

Office of Construction and Facilities Management

VA U.S. Department of Veterans Affairs

Drawing Title: MARE ISLAND ELECTRICAL PLANS	Phase: BID DOCUMENTS
Approved: Project Director: VA SIERRA PACIFIC NETWORK (VISN 21) VA NORTHERN CALIFORNIA HEALTHCARE SYSTEM	

Project Title: CORRECT MARTINEZ & MARE ISLAND GENERATOR FUEL LINES	Project Number: 612-23-005
	Building Number: N/A
Location: 150 MUIR ROAD MARTINEZ, CA 94553 / 201 WALNUT AVENUE MARE ISLAND, CA 94592	Drawing Number: EP-103
Issue Date: 04/17/2026	Checked: D.L.E.
	Drawn: K.E.B.

File Path: 6/14/2009 12:39:03 PM

VA FORM 08 - 6231

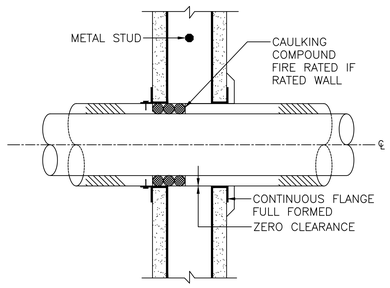

1 E-500 PIPE SLEEVE THROUGH WALL DETAIL

SCALE:NOT TO SCALE

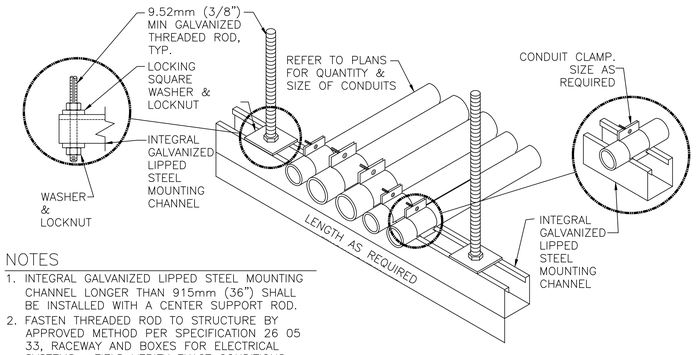

NOTES

1. INTEGRAL GALVANIZED LIPPED STEEL MOUNTING CHANNEL LONGER THAN 915mm (36") SHALL BE INSTALLED WITH A CENTER SUPPORT ROD.
2. FASTEN THREADED ROD TO STRUCTURE BY APPROVED METHOD PER SPECIFICATION 26 05 33, RACEWAY AND BOXES FOR ELECTRICAL SYSTEMS. FIELD VERIFY EXACT CONDITIONS.

2 E-500 TYPICAL CONDUIT TRAPEZE MOUNTING DETAIL

SCALE:NOT TO SCALE

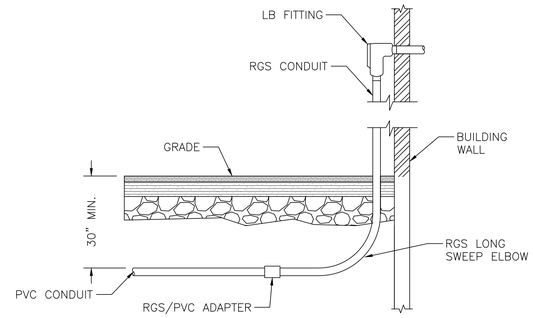

3 E-500 TYPICAL CONDUIT UNDERGROUND SWEEP AND LB JOINT DETAIL

SCALE:NOT TO SCALE

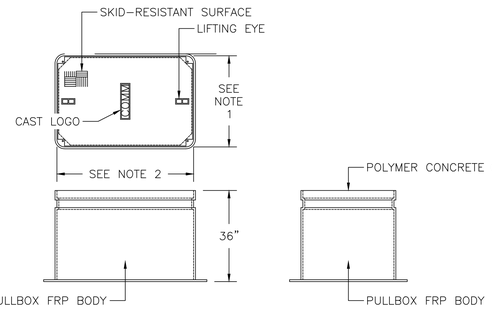

NOTES

1. PROVIDE DIVIDER IN PULL BOXES DIVIDER SHALL SEPARATE ALL POWER AND COMMUNICATION WIRING.
2. PULL BOXES SHALL BE UL LISTED FOR BOTH POWER AND COMMUNICATION WIRING. PROVIDE SHOP DRAWINGS.
3. PULLBOX COVER SHALL BE LOCKABLE.
4. ALL PULLBOXES SHALL BE SIZED PER NEC ARTICLE 314. CONTRACTOR SHALL PROVIDE SHOP DRAWINGS, INCLUDING DIMENSIONS, PRIOR TO INSTALLATION.

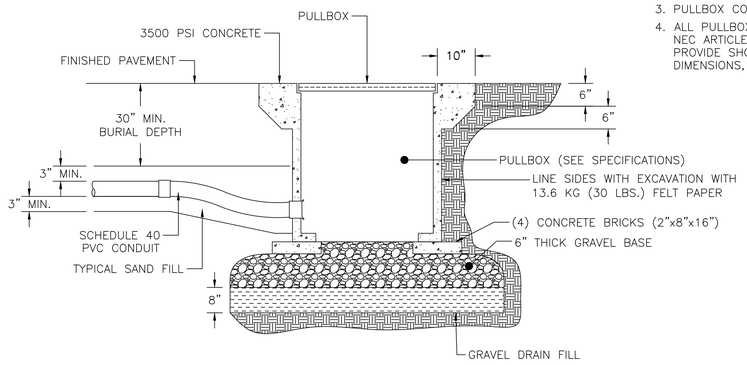

4 E-500 TYPICAL IN-GROUND PULLBOX CABLE – SIDE ENTRY/EXIT

SCALE:NOT TO SCALE

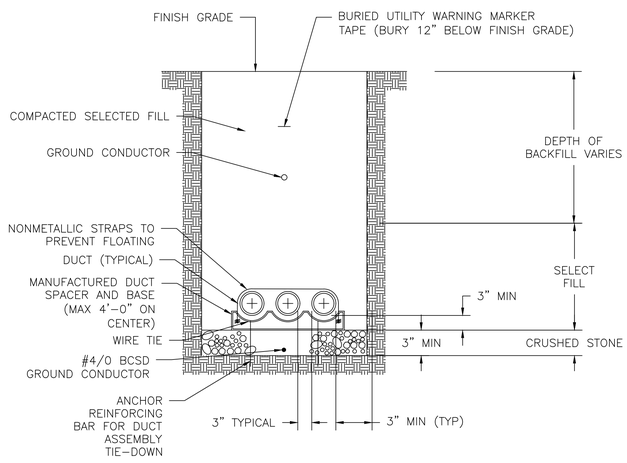

5 E-500 TYPICAL NON-REINFORCED DUCT BANK DETAIL

SCALE:NOT TO SCALE

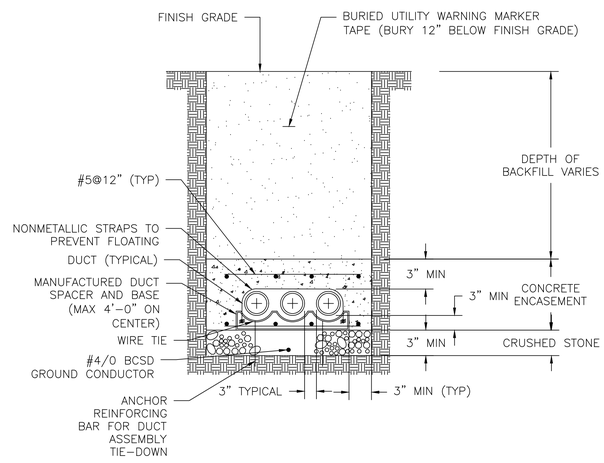

6 E-500 TYPICAL REINFORCED DUCT BANK DETAIL

SCALE:NOT TO SCALE

NOTES

1. CONDUIT TO BE RIGID NON-METALLIC TYPE FOR CONCRETE ENCASEMENT, SIZE AND NUMBER AS INDICATED ON DRAWINGS. SEE SPECIFICATIONS FOR ADDITIONAL INFORMATION.
2. INSTALL SPACERS EVERY 5 FEET. ALL SPACERS TO PROVIDE 3 INCH VERTICAL AND HORIZONTAL SEPARATION BETWEEN CONDUITS.
3. CONCRETE ENCASEMENT: ALL CONCRETE TO HAVE COMPRESSIVE STRENGTH OF 2500 P.S.I. AT 28 DAYS. NO AGGREGATE LARGER THAN 3/4 INCH.
4. FOR USE UNDER ROADWAYS.

Revisions:	Date:

CONSULTANT

ARCHITECT/ENGINEER OF RECORD

NEI Northeast Infrastructure, LLC
34 BROWN STREET
HONESDALE, PA 18431
OFFICE : (570) 253-0846
WWW.NEINFRA.COM

STAMP

REGISTERED PROFESSIONAL ENGINEER
No. PE045114E

Office of Construction and Facilities Management

VA U.S. Department of Veterans Affairs

Drawing Title: ELECTRICAL DETAILS

Phase: BID DOCUMENTS

Project Title: CORRECT MARTINEZ & MARE ISLAND GENERATOR FUEL LINES

Project Number: 612-23-005

Building Number: N/A

Approved: Project Director: VA SIERRA PACIFIC NETWORK (VISN 21) VA NORTHERN CALIFORNIA HEALTHCARE SYSTEM

Location: 150 MUIR ROAD MARTINEZ, CA 94553 | 201 WALNUT AVENUE MARE ISLAND, CA 94592

Issue Date: 04/17/2026

Checked: D.L.E.

Drawn: K.E.B.

Drawing Number: E-500

File Path: 6/14/2009 12:39:03 PM

VA FORM 08 - 6231

PANELBOARD SCHEDULE

DESIGNATION: EGEN (EXISTING DEMO) | BUS: 100A | MAIN: 100A MCB | BOD: WESTINGHOUSE | VOLTAGE: 208 / 120 V 3ϕ 4W | INTERRUPTING RATING: 10K AIC | ENCLOSURE: NEMA 3R | LOCATION: MARTINEZ, BLDG 19, RM D117 | FED BY: ELDP | MOUNTING: SURFACE

	CKT NO	POLE	TRIP	WIRE	G	CONDUIT	LOAD	KVA ~ A		KVA ~ B		KVA ~ C		LOAD	CONDUIT	G	WIRE	TRIP	POLE	CKT NO
	1	1	–	–	–	–	EXISTING	(E)	(E)	——	——	——	——	EXISTING	–	–	–	–	2	2
	3	1	–	–	–	–	EXISTING	——	——	(E)	(E)	——	——							4
	5	1	–	–	–	–	EXISTING	——	——	——	——	(E)	(E)	EXISTING	–	–	–	–	2	6
A	7	1	20	(E)	(E)	(E)	TANK MON	(E)	(E)	——	——	——	——							8
	9	1	–	–	–	–	EXISTING	——	——	(E)	–	——	——	SPACE	–	–	–	–	1	10
	11	1	–	–	–	–	EXISTING	——	——	——	——	(E)	–	SPACE	–	–	–	–	1	12
A	13	1	20	(E)	(E)	(E)	FUEL PUMP	(E)	–	——	——	——	——	SPACE	–	–	–	–	1	14
	15	1	–	–	–	–	SPACE	——	——	–	–	——	——	SPACE	–	–	–	–	1	16
	17	1	–	–	–	–	SPACE	——	——	——	——	–	–	SPACE	–	–	–	–	1	18
	19	1	–	–	–	–	EXISTING	(E)	–	——	——	——	——	SPACE	–	–	–	–	1	20
	21	1	–	–	–	–	SPACE	——	——	–	–	——	——	SPACE	–	–	–	–	1	22
	23	1	–	–	–	–	SPACE	——	——	——	——	–	–	SPACE	–	–	–	–	1	24
	25							(E)	–	——	——	——	——	SPACE	–	–	–	–	1	26
	27	3	100	–	–	–	MAIN	——	——	(E)	–	——	——	SPACE	–	–	–	–	1	28
	29							——	——	——	——	(E)	–	SPACE	–	–	–	–	1	30

NOTES:
(E) – EXISTING

A – DEMOLISH CIRCUIT BREAKER AND CONDUIT, CONDUCTORS AND ASSOCIATED MATERIALS TO EQUIPMENT SERVED (TO BE DEMOLISHED).

PANELBOARD SCHEDULE

DESIGNATION: EGEN (EXISTING NEW WORK) | BUS: 100A | MAIN: 100A MCB | BOD: WESTINGHOUSE | VOLTAGE: 208 / 120 V 3ϕ 4W | INTERRUPTING RATING: 10K AIC | ENCLOSURE: NEMA 3R | LOCATION: MARTINEZ, BLDG 19, RM D117 | FED BY: ELDP | MOUNTING: SURFACE

CKT NO	POLE	TRIP	WIRE	G	CONDUIT	LOAD	KVA ~ A		KVA ~ B		KVA ~ C		LOAD	CONDUIT	G	WIRE	TRIP	POLE	CKT NO	
1	1	–	–	–	–	EXISTING	(E)	(E)	——	——	——	——	EXISTING	–	–	–	–	2	2	
3	1	–	–	–	–	EXISTING	——	——	(E)	(E)	——	——							4	
5	1	–	–	–	–	EXISTING	——	——	——	——	(E)	(E)	EXISTING	–	–	–	–	2	6	
7	1	20	–	–	–	**SPARE**	0.00	(E)	——	——	——	——							8	
9	1	–	–	–	–	EXISTING	——	——	(E)	**1.05**	——	——	**DUPLEX PUMP SET P1 & P2**	**3/4"**	**10**	**10**	**20**	**3**	10	
11	1	–	–	–	–	EXISTING	——	——	——	——	(E)	**1.05**							12	*
13	1	20	–	–	–	**SPARE**	0.00	**1.05**	——	——	——	——							14	
15	1	–	–	–	–	SPACE	——	——	–	**0.30**	——	——	**B19 LEAK DETECTION SYSTEM**	**3/4"**	**10**	**10**	**20**	**1**	16	*
17	1	–	–	–	–	SPACE	——	——	——	——	–	**0.18**	**FUEL TANK ENCLOSURE RECEP**	**3/4"**	**12**	**12**	**20**	**1**	18	*
19	1	–	–	–	–	EXISTING	(E)	**0.27**	——	——	——	——	**JOHNSON CONTROLS PANEL**	**3/4"**	**10**	**10**	**20**	**1**	20	*
21	1	–	–	–	–	SPACE	——	——	–	**0.03**	——	——	**LINE LEAK DETECTION SENSOR**	**3/4"**	**12**	**12**	**20**	**1**	22	*
23	1	–	–	–	–	SPACE	——	——	——	——	–	–	SPACE	–	–	–	–	1	24	
25							(E)	–	——	——	——	——	SPACE	–	–	–	–	1	26	
27	3	100	–	–	–	MAIN	——	——	(E)	–	——	——	SPACE	–	–	–	–	1	28	
29							——	——	——	——	(E)	–	SPACE	–	–	–	–	1	30	
						KVA PER PHASE	1.32		1.38		1.23									

NOTE: (E) – EXISTING

* – PROVIDE CIRCUIT BREAKER, CONDUIT, CONDUCTORS AND GROUND AS REQUIRED PER MANUFACTURER'S REQUIREMENTS.

ADDITIONAL CONNECTED KVA	3.93	ADDITIONAL CONNECTED AMPERES	10.91

PANELBOARD SCHEDULE

DESIGNATION: ELGEN (EXISTING DEMO) | BUS: 100A | MAIN: 100A MCB | BOD: SQUARE D | VOLTAGE: 208 / 120 V 3ϕ 4W | INTERRUPTING RATING: 10K AIC | ENCLOSURE: NEMA 3R | LOCATION: MARTINEZ, BLDG 20, RM H205 | FED BY: XFMR T–ELGEN | MOUNTING: SURFACE

	CKT NO	POLE	TRIP	WIRE	G	CONDUIT	LOAD	KVA ~ A		KVA ~ B		KVA ~ C		LOAD	CONDUIT	G	WIRE	TRIP	POLE	CKT NO	
A	1	1	20	(E)	(E)	(E)	TANK MONITOR	(E)	(E)	——	——	——	——	EXISTING	–	–	–	–	1	2	
	3	1	–	–	–	–	EXISTING	——	——	(E)	(E)	——	——	EXISTING	–	–	–	–	1	4	
	5	1	20	–	–	–	SPARE	——	——	——	——	0.00	(E)	EXISTING	–	–	–	–	1	6	
	7	1	20	–	–	–	SPARE	0.00	(E)	——	——	——	——	DAY TANK RETURN	(E)	(E)	(E)	20	1	8	A
	9	1	–	–	–	–	EXISTING	——	——	(E)	(E)	——	——	EXISTING	–	–	–	–	1	10	
	11	1	–	–	–	–	EXISTING	——	——	——	——	(E)	(E)	EXISTING	–	–	–	–	1	12	
	13	1		–	–	–	EXISTING	(E)	(E)	——	——	——	——	FUEL PUMP	(E)	(E)	(E)	20	1	14	A
	15	1	–	–	–	–	EXISTING	——	——	——	——	——	——	EXISTING	–	–	–	–	2	16	
	17	1	–	–	–	–	SPACE	——	——	——	——	–	(E)							18	
B	19	2	–	–	–	–	EXISTING	(E)	(E)	——	——	——	——	EXISTING	–	–	–	–	2	20	
	21							——	——	(E)	(E)	——	——							22	
	23	2	30	–	–	–	SPARE	——	——	——	——	(E)	–	SPACE	–	–	–	–	1	24	
	25							(E)	–	——	——	——	——	SPACE	–	–	–	–	1	26	
	27	2	30	–	–	–	SPARE	——	——	(E)	(E)	——	——	EXISTING	–	–	–	–	2	28	
	29							——	——	——	——	(E)	(E)							30	

NOTES:
(E) – EXISTING

A – DEMOLISH CIRCUIT BREAKER AND CONDUIT, CONDUCTORS AND ASSOCIATED MATERIALS TO EQUIPMENT SERVED (TO BE DEMOLISHED).

B – EXISTING BREAKER TO BE RELOCATED

PANELBOARD SCHEDULE

DESIGNATION: ELGEN (EXISTING NEW WORK) | BUS: 100A | MAIN: 100A MCB | BOD: SQUARE D | VOLTAGE: 208 / 120 V 3ϕ 4W | INTERRUPTING RATING: 10K AIC | ENCLOSURE: NEMA 3R | LOCATION: MARTINEZ, BLDG 20, RM H205 | FED BY: XFMR T–ELGEN | MOUNTING: SURFACE

	CKT NO	POLE	TRIP	WIRE	G	CONDUIT	LOAD	KVA ~ A		KVA ~ B		KVA ~ C		LOAD	CONDUIT	G	WIRE	TRIP	POLE	CKT NO	
	1	1	20	–	–	–	**SPARE**	0.00	(E)	——	——	——	——	EXISTING	–	–	–	–	1	2	
	3	1	–	–	–	–	EXISTING	——	——	(E)	(E)	——	——	EXISTING	–	–	–	–	1	4	
*	5	**1**	**20**	**10**	**10**	**3/4"**	**JOHNSON CONTROLS PANEL**	——	——	——	——	**0.27**	(E)	EXISTING	–	–	–	–	1	6	
*	7	**1**	**20**	**12**	**12**	**3/4"**	**LINE LEAK DETECTION SENSOR**	**0.03**	**0.30**	——	——	——	——	**POLISHER**	**3/4"**	**10**	**10**	**20**	**1**	8	*
	9	1	–	–	–	–	EXISTING	——	——	(E)	(E)	——	——	EXISTING	–	–	–	–	1	10	
	11	1	–	–	–	–	EXISTING	——	——	——	——	(E)	(E)	EXISTING	–	–	–	–	1	12	
	13	1	–	–	–	–	EXISTING	(E)	**0.30**	——	——	——	——	**B20 LEAK DETECTION SYSTEM**	**3/4"**	**10**	**10**	**20**	**1**	14	*
	15	1	–	–	–	–	EXISTING	——	——	(E)	(E)	——	——	EXISTING	–	–	–	–	2	16	
1	17	2	–	–	–	–	EXISTING	——	——	——	——	(E)	(E)							18	
	19							(E)	(E)	——	——	——	——	EXISTING	–	–	–	–	2	20	
	21							——	——	**1.05**	(E)	——	——							22	
*	23	**3**	**20**	**10**	**10**	**3/4"**	**DUPLEX PUMP SET P5 & P6**	——	——	——	——	**1.05**	**0.18**	**FUEL TANK ENCLOSURE RECEP**	**3/4"**	**12**	**12**	**20**	**1**	24	*
	25							**1.05**	–	——	——	——	——	SPACE	–	–	–	–	1	26	
	27	2	30	–	–	–	SPARE	——	——	0.00	(E)	——	——	EXISTING	–	–	–	–	2	28	
	29							——	——	——	——	0.00	(E)							30	
							KVA PER PHASE	1.68		1.05		1.50									

NOTE:
(E) – EXISTING

* – PROVIDE CIRCUIT BREAKER, CONDUIT, CONDUCTORS AND GROUND AS REQUIRED PER MANUFACTURER'S REQUIREMENTS.

1 – RELOCATE EXISTING BREAKER

ADDITIONAL CONNECTED KVA	4.23	ADDITIONAL CONNECTED AMPERES	11.74

Revisions:	Date:

CONSULTANT

ARCHITECT/ENGINEER OF RECORD

NEI Northeast Infrastructure, LLC
34 BROWN STREET
HONESDALE, PA 18431
OFFICE : (570) 253-0846
WWW.NEINFRA.COM

STAMP

Office of Construction and Facilities Management

VA U.S. Department of Veterans Affairs

Drawing Title: MARTINEZ ELECTRICAL SCHEDULES
Phase: BID DOCUMENTS
Project Title: CORRECT MARTINEZ & MARE ISLAND GENERATOR FUEL LINES
Project Number: 612-23-005
Building Number: N/A
Approved: Project Director: VA SIERRA PACIFIC NETWORK (VISN 21) VA NORTHERN CALIFORNIA HEALTHCARE SYSTEM
Location: 150 MUIR ROAD MARTINEZ, CA 94553 | 201 WALNUT AVENUE MARE ISLAND, CA 94592
Drawing Number: E-600
Issue Date: 04/17/2026
Checked: D.L.E.
Drawn: V.A.C.

File Path: 6/14/2009 12:39:03 PM

VA FORM 08 - 6231

PANELBOARD SCHEDULE

DESIGNATION:	BUS:	VOLTAGE:	LOCATION:
MH (EXISTING NEW WORK)	1600A	208 / 120 V 3ϕ 4W	MARE ISLAND, BLDG 201 EXTERIOR
	MAIN: 2000AF/1600AT MCB	INTERRUPTING RATING: 42K AIC	FED BY: MR
	BOD: WESTINGHOUSE	ENCLOSURE: NEMA 3R	MOUNTING: SURFACE

CKT NO	POLE	TRIP	WIRE	G	CONDUIT	LOAD	KVA ~ A		KVA ~ B		KVA ~ C		LOAD	CONDUIT	G	WIRE	TRIP	POLE	CKT NO
* 1	**3**	**100**	**1**	**8**	**1 1/2"**	**SUB PANEL**	**1.44**	(E)	—	—	—	—	EXISTING	–	–	–	20	3	2
							—	—	**1.44**	(E)	—	—							
							—	—	—	—	**1.44**	(E)							
3	2	20	–	–	–	SPARE	0.00	(E)	—	—	—	—	EXISTING	–	–	–	100	2	4
							—	—	0.00	(E)	—	—							
5	3	600	–	–	–	SPARE	—	—	—	—	0.00	0.00	SPARE	–	–	–	600	3	6
							0.00	0.00	—	—	—	—							
							—	—	0.00	0.00	—	—							
7	3	1200	–	–	–	EXISTING	—	—	—	—	(E)	–	–	–	–	–	–	–	8
							(E)	–	—	—	—	—							
							—	—	(E)	–	—	—							
KVA PER PHASE							1.44		1.44		1.44								

NOTE: (E) – EXISTING

* – PROVIDE CIRCUIT BREAKER, CONDUIT, CONDUCTORS AND GROUND AS REQUIRED PER MANUFACTURER'S REQUIREMENTS.

ADDITIONAL CONNECTED KVA	4.32	ADDITIONAL CONNECTED AMPERES	11.99

PANELBOARD SCHEDULE

DESIGNATION:	BUS:	VOLTAGE:	LOCATION:
GEN AUX PANEL (EXISTING NEW WORK)	100A	208 / 120 V 1ϕ 3W	MARE ISLAND GENERATOR ENCLOSURE
	MAIN: 100A MCB	INTERRUPTING RATING: EXISTING	FED BY: MH
	BOD: SQUARE D	ENCLOSURE: EXISTING	MOUNTING: SURFACE

CKT NO	POLE	TRIP	WIRE	G	CONDUIT	LOAD	KVA ~ A		KVA ~ B		KVA ~ C		LOAD	CONDUIT	G	WIRE	TRIP	POLE	CKT NO
1	1	15	–	–	–	EXISTING	(E)	(E)	—	—	—	—	EXISTING	–	–	–	15	1	2
3	2	20	–	–	–	EXISTING	—	—	(E)	(E)	—	—	EXISTING	–	–	–	15	1	4
5							—	—	—	—	(E)	(E)	EXISTING	–	–	–	15	1	6
7	1	15	–	–	–	EXISTING	(E)	(E)	—	—	—	—	EXISTING	–	–	–	15	1	8
* 9	**1**	**20**	**10**	**10**	**3/4"**	**LEAK DETECTION SYSTEM**	—	—	**0.30**	**0.30**	—	—	**PUMP STATUS/TEST DISPLAY**	**3/4"**	**10**	**10**	**20**	**1**	10 *
* 11	**1**	**20**	**10**	**10**	**3/4"**	**JOHNSON CONTROLS PANEL**	—	—	—	—	**0.27**	**0.03**	**LINE LEAK DETECTION SENSOR**	**3/4"**	**12**	**12**	**20**	**1**	12 *
KVA PER PHASE							(E)		0.60		0.30								

NOTE: (E) – EXISTING

* – PROVIDE CIRCUIT BREAKER, CONDUIT, CONDUCTORS AND GROUND AS REQUIRED PER MANUFACTURER'S REQUIREMENTS.

ADDITIONAL CONNECTED KVA	0.90	ADDITIONAL CONNECTED AMPERES	2.50

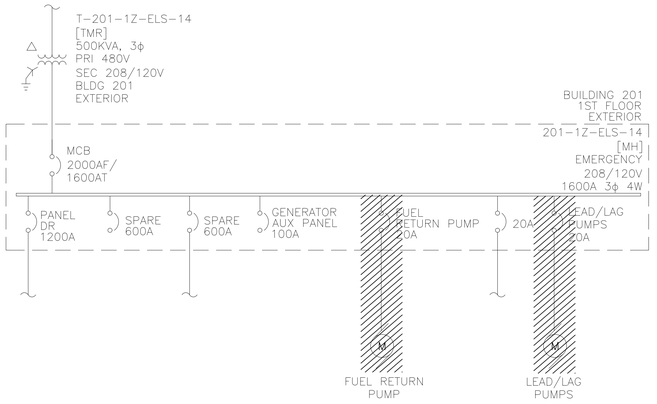

1 E-601 MARE ISLAND BUILDING 201 PARTIAL ONE-LINE – DEMOLITION

SCALE:NO SCALE

PANELBOARD SCHEDULE

DESIGNATION:	BUS:	VOLTAGE:	LOCATION:
SUB PANEL (NEW WORK)	100A	208 / 120 V 3ϕ 4W	MARE ISLAND, BLDG 201 EXTERIOR
	MAIN: 100A MCB	INTERRUPTING RATING: 22K AIC	FED BY: MH
	BOD: SQUARE D	ENCLOSURE: NEMA 3R	MOUNTING: SURFACE

CKT NO	POLE	TRIP	WIRE	G	CONDUIT	LOAD	KVA ~ A		KVA ~ B		KVA ~ C		LOAD	CONDUIT	G	WIRE	TRIP	POLE	CKT NO
1							1.05	0.00	—	—	—	—	SPARE	–	–	–	20	1	2
3	3	20	12	12	3/4"	DUPLEX PUMP SET P9 & P10	—	—	1.05	0.00	—	—	SPARE	–	–	–	20	1	4
5							—	—	—	—	1.05	0.00	SPARE	–	–	–	20	1	6
7	1	20	12	12	3/4"	DAY TANK RETURN PUMP P11	1.18	0.00	—	—	—	—	SPARE	–	–	–	20	1	8
9	1	20	–	–	–	SPARE	—	—	0.00	0.00	—	—	SPARE	–	–	–	20	1	10
11	1	20	–	–	–	SPARE	—	—	—	—	0.00	0.00	SPARE	–	–	–	20	1	12
13	2	21	–	–	–	SPARE	0.00	0.00	—	—	—	—	SPARE	–	–	–	20	1	14
15	3	22	–	–	–	SPARE	—	—	0.00	0.00	—	—	SPARE	–	–	–	20	1	16
17	4	23	–	–	–	SPARE	—	—	—	—	0.00	0.00	SPARE	–	–	–	20	1	18
19	5	24	–	–	–	SPARE	0.00	0.00	—	—	—	—	SPARE	–	–	–	20	1	20
21	6	25	–	–	–	SPARE	—	—	0.00	0.00	—	—	SPARE	–	–	–	20	1	22
23	7	26	–	–	–	SPARE	—	—	—	—	0.00	0.00	SPARE	–	–	–	20	1	24
KVA PER PHASE							2.23		1.05		1.05								

NOTE: COORDINATE PANELBOARD DESIGNATION WITH VA COR

TOTAL CONNECTED KVA	4.33	TOTAL CONNECTED AMPERES	12.02

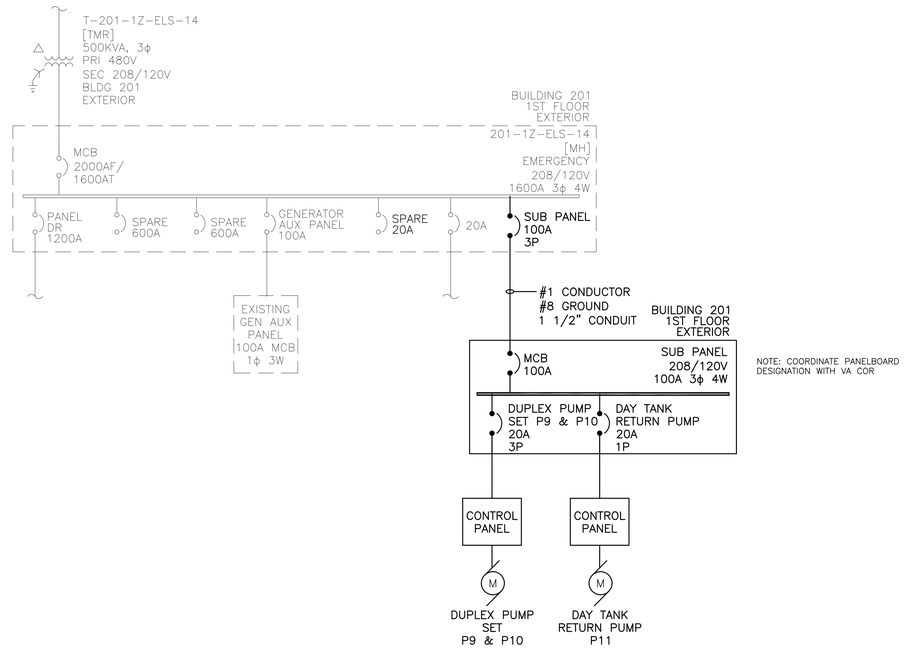

NOTE: COORDINATE PANELBOARD DESIGNATION WITH VA COR

2 E-601 MARE ISLAND BUILDING 201 PARTIAL ONE-LINE – NEW WORK

SCALE:NO SCALE

Revisions:	Date:

CONSULTANT

ARCHITECT/ENGINEER OF RECORD

NEI Northeast Infrastructure, LLC
34 BROWN STREET
HONESDALE, PA 18431
OFFICE : (570) 253-0846
WWW.NEINFRA.COM

STAMP

Office of Construction and Facilities Management

VA U.S. Department of Veterans Affairs

Drawing Title	MARE ISLAND ELECTRICAL SCHEDULES & ONE-LINES
Phase	BID DOCUMENTS
Project Title	CORRECT MARTINEZ & MARE ISLAND GENERATOR FUEL LINES
Project Number	612-23-005
Building Number	N/A
Approved: Project Director	VA SIERRA PACIFIC NETWORK (VISN 21) VA NORTHERN CALIFORNIA HEALTHCARE SYSTEM
Location	150 MUIR ROAD MARTINEZ, CA 94553 / 201 WALNUT AVENUE MARE ISLAND, CA 94592
Drawing Number	E-601
Issue Date	04/17/2026
Checked	D.L.E.
Drawn	V.A.C.

6/14/2009 12:39:03 PM

File Path

VA FORM 08 - 6231