ARCHITECTURAL SYMBOLS

A1 / A-501 / SIM — DETAIL NUMBER; SHEET WHERE DRAWN	**DETAIL TAG**
ROOM / 101 — ROOM NAME; ROOM NUMBER	**ROOM TAG**
A1 / A-901 — PHOTOGRAPH NUMBER; SHEET WHERE SHOWN	**PHOTOGRAPH TAG**
A1 / A-301 — BUILDING	
A1 / A-301 — SECTION NUMBER; SHEET WHERE DRAWN	**BUILDING SECTION TAG**
A1 / A-401 — INTERIOR ELEVATION NUMBER; SHEET WHERE DRAWN	**INTERIOR ELEVATION TAG**
A1 / A-301 — SECTION NUMBER; SHEET WHERE DRAWN	**WALL / PARTIAL BUILDING SECTION TAG**
1 — KEYNOTE NUMBER	**NEW WORK KEYNOTE TAG**
234 — SPECIALITY ITEM NUMBER	**SPECIALITY ITEM TAG**
A1 / A-301 — DIRECTION OF VIEW; ELEVATION NUMBER; SHEET WHERE DRAWN	**EXTERIOR ELEVATION TAG**
1 — KEYNOTE NUMBER	**DEMO KEYNOTE TAG**
33 — PARTITION IN PLAN; PARTITION TYPE DESIGNATION (REFER TO PARTITION SCHEDULE)	**PARTITION TYPE TAG**
101 — DOOR NUMBER (REFER TO DOOR SCHEDULE)	**DOOR TAG**
B — WINDOW TYPE LETTER	**WINDOW TYPE TAG**
A — SIGNAGE TYPE LETTER	**SIGNAGE TYPE TAG**

MATERIALS LEGEND

SECTION	ELEVATION
WOOD - ROUGH	EFS - DIRECT APPLIED EXTERIOR FINISH SYSTEM
WOOD BLOCKING	CMU - UNPAINTED & SEALED
PLYWOOD	CMU - PAINTED
CONCRETE MASONRY UNIT	GLAZED BLOCK
BRICK	GLAZING
CAST-IN-PLACE CONCRETE (CIP) - WALLS, FLOORS, ROOFS	SPANDREL GLAZING / STEEL PANEL
STEEL	CONCRETE FOUNDATION
ALUMINUM	
GYPSUM BOARD	
BATT/LOOSE FILL INSULATION	
RIGID INSULATION	
SAND / MORTAR / PLASTER	
EARTH / NATIVE SOIL UNCOMPACTED	
GRAVEL / COMPACTED BASE COURSE	
COMPACTED FILL SUBGRADE - SAND, GRAVEL , EARTH	
ACOUSTICAL TILE CEILING	
CERAMIC OR PORCELAIN TILE	
FINISHED WOOD - PAINTED OR STAINED	

GENERAL SHEET NOTES

1. ALL ITEMS INDICATED TO BE REMOVED MUST BE DISPOSED OF OFF SITE UNLESS OTHERWISE NOTED.
2 ALL MATERIALS MUST BE NEW AND PROVIDED BY THE CONTRACTOR UNLESS SPECIFICALLY NOTED AS EXISTING OR AS PROVIDED BY THE GOVERNMENT.
3 ALL WOOD BLOCKING AND MISCELLANEOUS STEEL SHOWN IN DETAILS AND SECTIONS MUST BE CONTINUOUS UNLESS SPECIFICALLY NOTED OTHERWISE.
4 VERIFY ALL FIELD CONDITIONS AND DIMENSIONS PRIOR TO PROCEEDING WITH THE WORK. DIMENSIONS FOR EXISTING WORK ARE INDICATED AS "±". ALL DISCREPANCIES MUST BE BROUGHT TO THE IMMEDIATE ATTENTION OF THE CONTRACTING OFFICER IN WRITING.
5 DEMOLITION OF PLUMBING, MECHANICAL AND ELECTRICAL ITEMS INDICATED ON THE ARCHITECTURAL DRAWINGS IS NOT INTENDED TO INCLUDE ALL NECESSARY DEMOLITION WORK FOR THESE ITEMS. REFER TO PLUMBING, MECHANICAL AND ELECTRICAL DEMOLITION DRAWINGS FOR ADDITIONAL INFORMATION.
6 DIMENSIONS INDICATED FOR NEW WORK ARE TO FACE OF STUD, FACE OF MASONRY OR FACE OF EXISTING SURFACES UNLESS OTHERWISE NOTED.
7 STUDY AND COMPARE THE CONTRACT DOCUMENTS WITH EACH OTHER, AND AT ONCE, REPORT TO THE ARCHITECT ANY ERRORS AND INCONSISTENCIES OR OMISSIONS DISCOVERED. ANY CONSTRUCTION ACTIVITY PERFORMED KNOWING IT INVOLVES A RECOGNIZED ERROR, INCONSISTENCY OR OMISSION IN THE CONTRACT DOCUMENTS WITHOUT SUCH NOTICE TO THE ARCHITECT, THE CONTRACTOR WILL ASSUME RESPONSIBILITY FOR SUCH PERFORMANCE AND WILL BEAR THE AMOUNT OF THE COST OF THE CONSTRUCTION.

ARCHITECTURAL ABBREVIATIONS

AAP	ATTIC ACCESS PANEL - CEILING
AB	ANCHOR BOLT
ACP	ACOUSTICAL CEILING PANEL
ACS PNL	ACCESS PANEL
ACT	ACOUSTICAL CEILING TILE
ADJ	ADJUST
AFF	ABOVE FINISHED FLOOR
ALT	ALTERNATE, ALTITUDE
ALUM	ALUMINUM
ANOD	ANODIZED
AP	ACCESS PANEL - WALL
APPROX	APPROXIMATE
ARCH	ARCHITECT
ASPH	ASPHALT
BD	BOARD
BLDG	BUILDING
BLW	BELOW
BM	BEAM
BOS	BOTTOM OF SLAB / STEEL
BOT	BOTTOM
BRG	BEARING
BSMT	BASEMENT
BTWN	BETWEEN
C TO C	CENTER TO CENTER
CAB	CABINET
CEM	CEMENT
CER	CERAMIC
CI	CAST IRON
CIP	CAST IRON PIPE
CJ	CONTROL / CONSTRUCTION JOINT
CL	CENTER LINE
CLG	CEILING
CLG REG	CEILING REGISTER
CLR	CLEAR
CMU	CONCRETE MASONRY UNIT
CND	CONDUIT
CNDS	CONDENSATE
CNSTR	CONSTRUCTION
CNTR	CNTR
CO	CLEANOUT
COC	COMBAT OPERATIONS CENTER
COL	COLUMN
CONC	CONCRETE
CONN	CONNECT
CONT	CONTINUE / CONTINUOUS
CORR	CORRIDOR
CPT	CARPET / COMMON PATH OF TRAVEL
CT	CERAMIC TILE
CTR	CENTER
D	DEPTH / DEEP
DEFS	DIRECT-APPLIED EXTERIOR FINISH SYSTEM
DEG	DEGREE
DEMO	DEMOLITION
DET	DETAIL
DIA	DIAMETER
DIM	DIMENSION
DR	DRAIN
DS	DOWNSPOUT
DW	DISHWASHER
DWG	DRAWING
E	EAST
EA	EACH
EIFS	EXTERIOR INSULATION & FINISH SYSTEM
EJ	EXPANSION JOINT
ELEC	ELECTRIC / ELECTRICAL
ELEV	ELEVATION
EPDM	ETHLENE PROPYLENE DIEN MONOMER
EQ	EQUAL
EQUIP	EQUIPMENT
EW	EACH WAY
EWC	ELECTRIC WATER COOLER
EXH	EXHAUST
EXIST	EXISTING
EXP	EXPANSION / EXPOSED / EXPAND
EXT	EXTERIOR
FD	FLOOR DRAIN
FDTN	FOUNDATION
FF	FINISH FACE
FG	FIGURE
FHC	FIRE HOUSE CABINET
FIN FLR	FINISHED FLOOR
FOF	FACE OF FINISH
FOM	FACE OF MASONRY
FOS	FACE OF STUB / FACE OF SLAB
FR	FRAME / FIRE RATING / FIRE RESISTANT
FT	FOOT, FEET
FTG	FOOTING
GA	GAUGE
GALV	GALVANIZED
GFCI	GOVERNMENT FURNISHED CONTRACTOR INSTALLED
GL	GLASS / GROUND LEVEL
GR	GROSS
GSU	GLAZED STRUCTURAL UNIT
GYP	GYPSUM
H	HIGH
H	HEIGHT
HB	HOSE BIB
HDW	HARDWARE
HM	HOLLOW METAL
HORIZ	HORIZONTAL
HVY	HEAVY
ID	INSIDE DIAMETER
INSUL	INSULATION / INSULATED
INT	INTERIOR
J-BOX	JUNCTION BOX
JAN	JANITOR CLOSET
LAV	LAVATORY
LB	POUND
LID	LOW IMPACT DEVELOPMENT
LT	LIGHT
MACH	MACHINE
MATL	MATERIAL
MAX	MAXIMUM
MBH	MOP AND BROOM HOLDER
MECH	MECHANICAL
MFR	MANUFACTURER
MI	MIRROR
MIN	MINIMUM / MINUTE
MISC	MISCELLANEOUS
ML	MATCH LINE
MO	MASONRY OPENING / MOTOR OPERATED
MTD	MOUNTED
MTG	MOUNTING / MEETING
MTL	METAL
MWP	MEMBRANE WATERPROOFING
N	NORTH
NIC	NOT IN CONTRACT
NO	NUMBER
NOM	NOMINAL
NTS	NOT TO SCALE
OA	OUTSIDE AIR
OC	ON CENTER
OD	OUTSIDE DIAMETER / DIMENSION
OPH	OPPOSITE HAND
OPNG	OPENING
OPP	OPPOSITE
OPT	OPTIONAL
PCT	PERCENT
PEJ	PREMOLDED EXPANSION JOINT
PL	PROPERTY LINE
PLAS	PLASTER / PLASTIC
PLYWD	PLYWOOD
PNL	PANEL
PRELIM	PRELIMINARY
PSF	POUNDS PER SQUARE FOOT
PSI	POUNDS PER SQUARE INCH
PT	PAINT
QT	QUARRY TILE
QTY	QUANTITY
R	RADUIS / RISER
RA	RETURN AIR
RAD	RETURN AIR DUCT
RAF	RAISED ACCESS FLOORING
RB	RESILIENT BASE
RD	ROOF DRAIN / ROAD
REFL	REFLECT
REFR	REFRIGERATION
REINF	REINFORCE
REQD	REQUIRED
REV	REVISION
RF	RESILIENT FLOORING
RL	ROOF LEADER
RM	ROOM
RND	ROUND
RO	ROUGH OPENING
RS	ROUGH SAWN
RT	RIGHT
S	SOUTH
SCHED	SCHEDULE
SECT	SECTION
SF	SQUARE FOOT
SIM	SIMILAR
SOG	SLAB-ON-GRADE
SPEC	SPECIFICATION
SQ	SQUARE
STD	STANDARD
STOR	STORAGE
STRL/STRUCT	STRUCTURAL
SUSP	SUSPENDED
T&B	TOP AND BOTTOM
TEL	TELEPHONE
THRES	THRESHOLD
THRU	THROUGH
TOS	TOP OF SLAB / STEEL
TP	TOILET PARTITION
TYP	TYPICAL
UON	UNLESS OTHERWISE NOTED
V	VOLT
VAR	VARIATION
VB	VINYL BASE
VCT	VINYL COMPOSITION TILE
VENT	VENTILATION / VENTILATOR
VERT	VERTICAL
VEST	VESTIBULE
VS	VENT STACK
VTR	VENT THROUGH ROOF
VWC	VINYL WALL COVERING
W	WASTE / WATT / WEST / WIDE
W/	WITH
W/O	WITHOUT
WC	WATER CLOSET / WALL COVERING
WD	WOOD
WH	WATER HEATER
WP	WATERPROOFING / WEATHERPROOF
WR	WATER RESISTANT
WSCT	WAINSCOT
WT	WEIGHT
WWF	WELDED WIRE FABRIC
XRMR	TRANSFORMER

SYM	DESCRIPTION	DATE	APPR

NAVFAC

MYLES M. MICHIBATA — LICENSED PROFESSIONAL ARCHITECT No. 12367 — HAWAII, U.S.A.
LIC. EXP 04/30/26 SEAL

ASMD LLC. A/E INFO

APPROVED Evan Mazza
FOR COMMANDER NAVFAC 03/ /2026

ACTIVITY: NATHANIEL PYRON, MILCON PLANNER, DPPH
SATISFACTORY TO DATE 3/10/2026
DES JG / RLB DRW RLB CHK JG
PM/DM DKS/DMK
BRANCH MANAGER KYM
CHIEF ENG/ARCH KYM
FIRE PROTECTION RYO

DEPARTMENT OF THE NAVY
NAVAL FACILITIES ENGINEERING SYSTEMS COMMAND ~ PACIFIC
NAVFAC PACIFIC
NAVAL FACILITIES ENGINEERING SYSTEMS COMMAND
MAKALAPA, HAWAII
U.S. NAVSUPPACT
MCB CAMP BLAZ, GUAM
JFY 2022 PROJECT J-875
BATTLE STAFF TRAINING FACILITY
ARCHITECTURAL NOTES AND SYMBOLS

SCALE: AS NOTED
EPROJECT NO.: 1696746
CONSTR. CONTR. NO.
NAVFAC DRAWING NO. 17321900
SHEET 104 OF 468
A-001

DRAWFORM REVISION: 25 AUGUST 2020

A-001
3/12/2026 9:11:52 PM
C:\Users\BlairtonsaDocuments\BLDG-875-1696746-A_rbalintonsaF4LVN.rvt

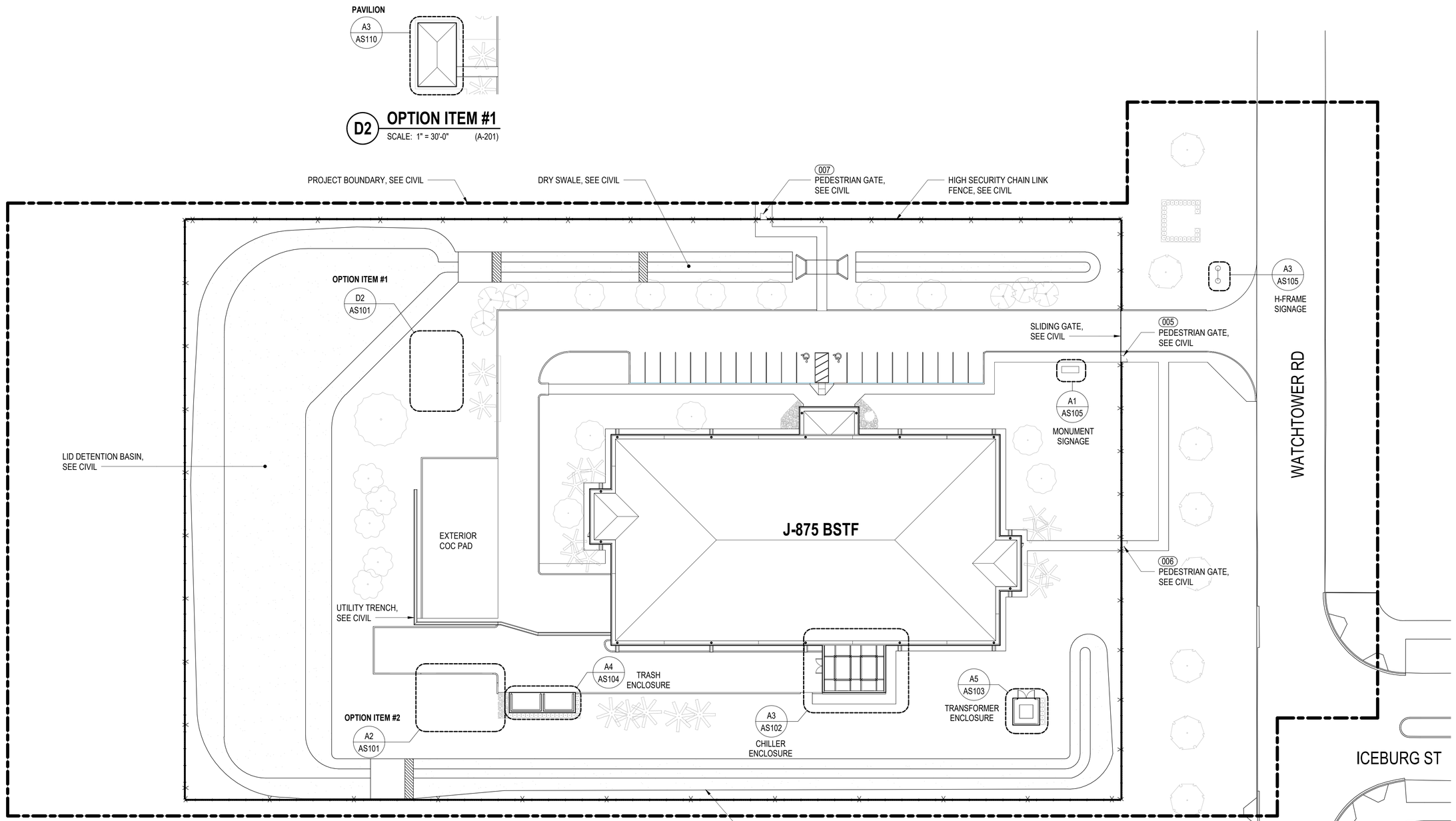

A1 ARCHITECTURAL SITE PLAN

SCALE: 1" = 30'-0"

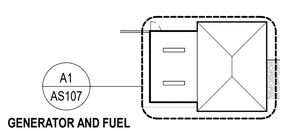

A2 OPTION ITEM #2

SCALE: 1" = 30'-0" (A-201)

PLAN NORTH

SYM	DESCRIPTION	DATE	APPR

NAVFAC

MYLES M. MICHIBATA LICENSED PROFESSIONAL ARCHITECT No. 12367 HAWAII, U.S.A.
LIC. EXP 04/30/26 SEAL

ASMD LLC. A/E INFO

APPROVED
Evan Meiger
FOR COMMANDER NAVFAC

ACTIVITY
NATHANIEL PYRON, MILCON PLANNER, DPPH

SATISFACTORY TO DATE 3/10/2026

DES JG / RLB	DRW RLB	CHK JG	
PM/DM			DKS/DMK
BRANCH MANAGER			KYM
CHIEF ENG/ARCH			KYM
FIRE PROTECTION			RYO

DEPARTMENT OF THE NAVY
NAVAL FACILITIES ENGINEERING SYSTEMS COMMAND
NAVFAC PACIFIC
U.S. NAVSUPPACT

NAVAL FACILITIES ENGINEERING SYSTEMS COMMAND ~ PACIFIC
MAKALAPA, HAWAII
MCB CAMP BLAZ, GUAM

JFY 2022 PROJECT J-875
BATTLE STAFF TRAINING FACILITY

ARCHITECTURAL SITE PLAN AND OPTION ITEMS

SCALE: AS NOTED
EPROJECT NO.: 1696746
CONSTR. CONTR. NO.
NAVFAC DRAWING NO. 17321901
SHEET 105 OF 468

AS101

DRAWFORM REVISION: 25 AUGUST 2020

3/12/2026 9:13:21 PM AS101
C:\Users\rrBattlone\Documents\BLDG-875-1696746-A_rbattlonsaFALVN.rvt

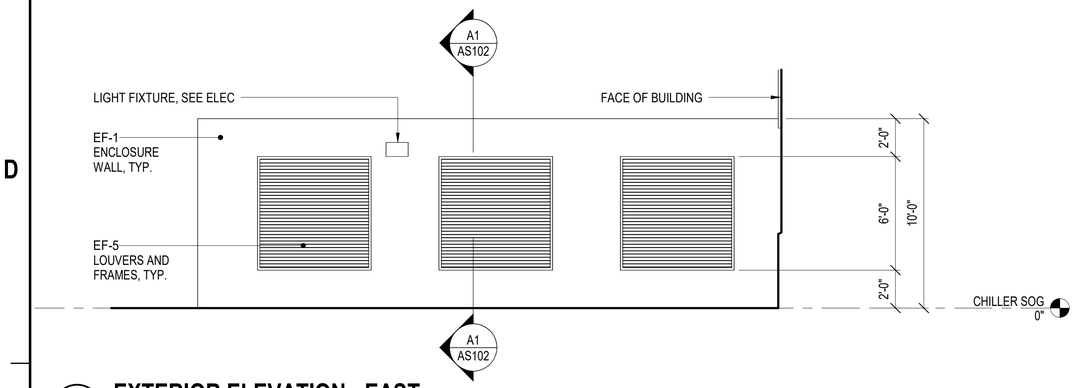

D1 EXTERIOR ELEVATION - EAST

SCALE: 1/4" = 1'-0" (A-103)

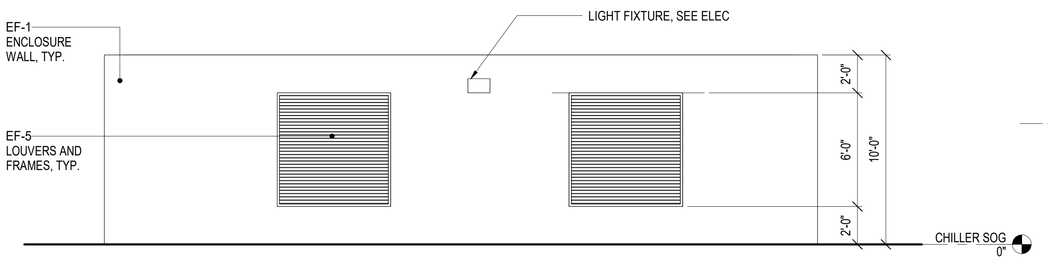

C1 EXTERIOR ELEVATION - SOUTH

SCALE: 1/4" = 1'-0" (AS102)

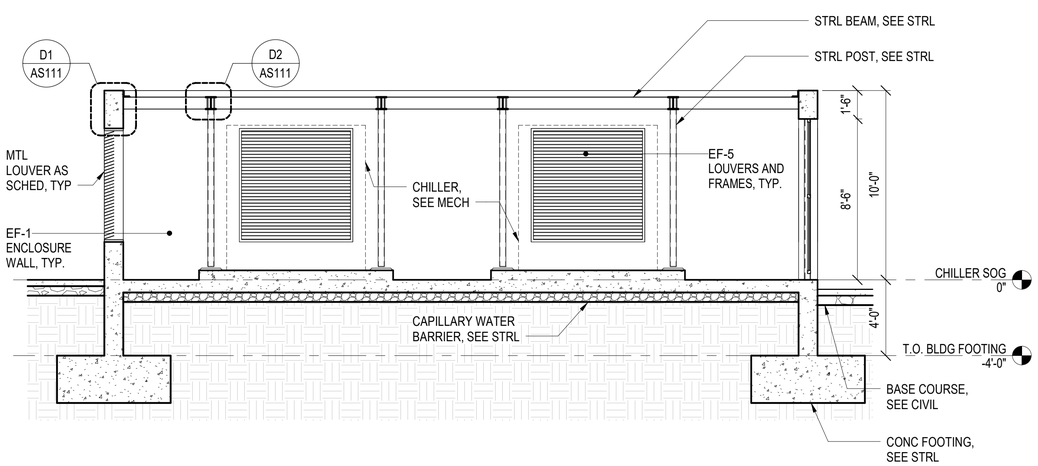

A1 SECTION

SCALE: 1/4" = 1'-0" (AS102)

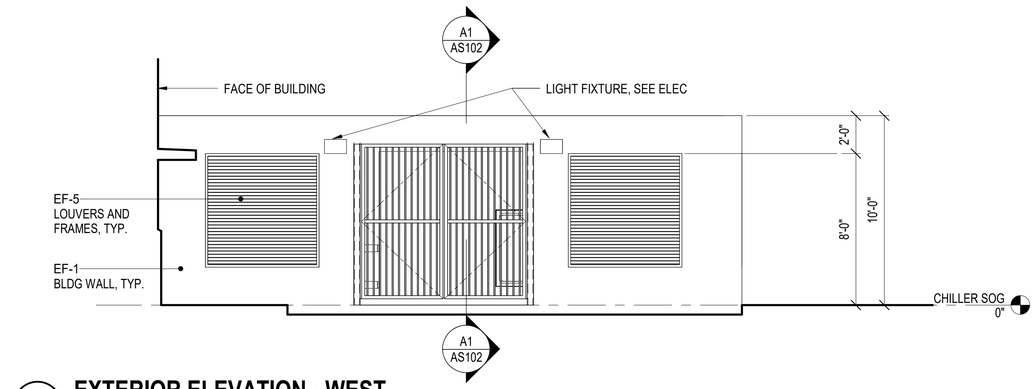

D3 EXTERIOR ELEVATION - WEST

SCALE: 1/4" = 1'-0" (A-102)

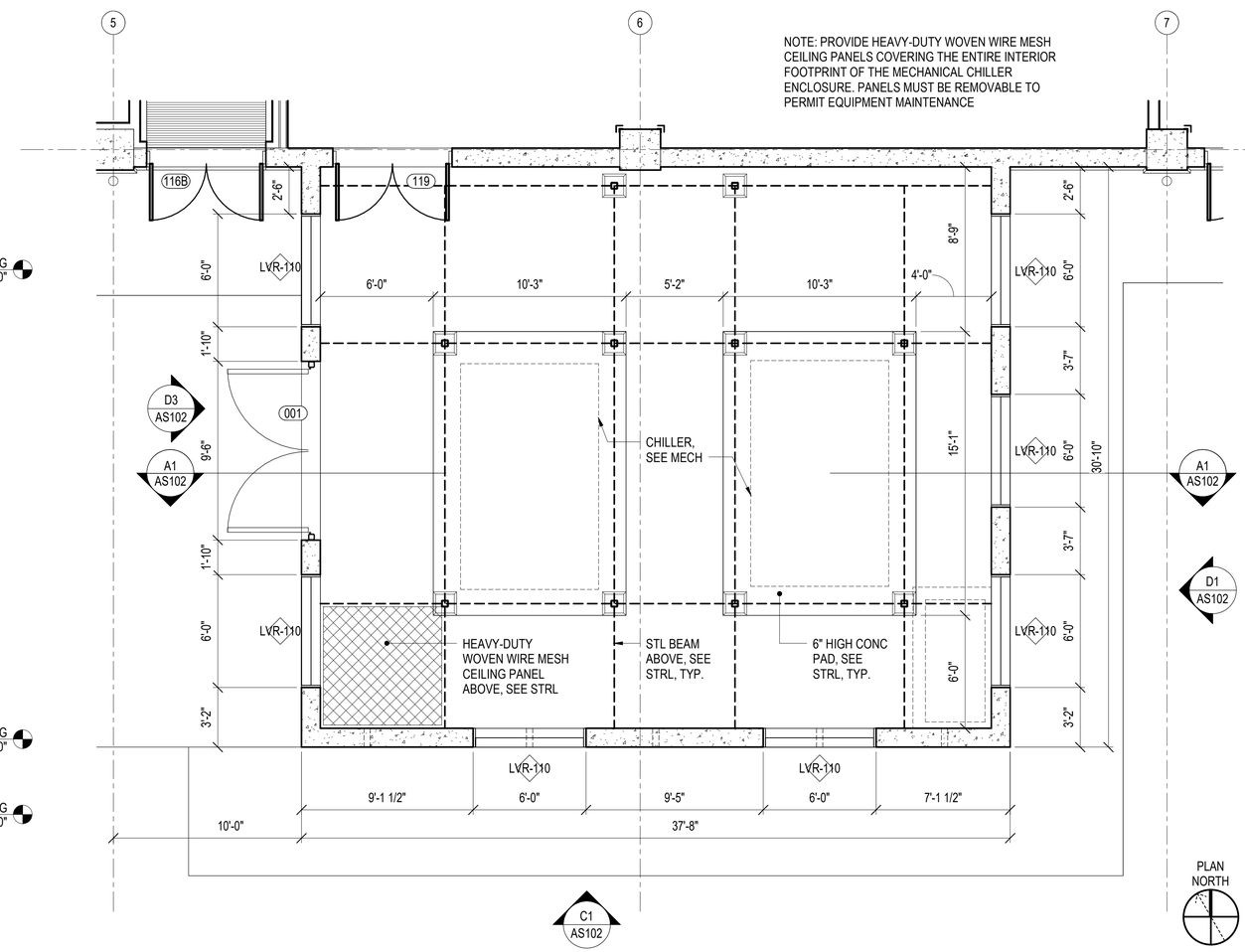

A3 CHILLER ENCLOSURE FLOOR PLAN

SCALE: 1/4" = 1'-0" (AS101)

GRAPHIC SCALE(S)

1/4" = 1' - 0" 0 1' 5' 10' 15'

SYM	DESCRIPTION	DATE	APPR

NAVFAC

MYLES M. MICHIBATA LICENSED PROFESSIONAL ARCHITECT No. 12367 HAWAII, U.S.A.
LIC. EXP 04/30/26 SEAL

ASMD LLC. A/E INFO

APPROVED
Evan Miyazaki
FOR COMMANDER NAVFAC
ACTIVITY
NATHANIEL PYRON, MILCON PLANNER, DPPH
SATISFACTORY TO DATE 3/10/2026
DES JG / RLB DRW RLB CHK JG
PMDM DKS/DMK
BRANCH MANAGER KYM
CHIEF ENG/ARCH KYM
FIRE PROTECTION RYO

DEPARTMENT OF THE NAVY
NAVFAC PACIFIC
NAVAL FACILITIES ENGINEERING SYSTEMS COMMAND ~ PACIFIC
NAVAL FACILITIES ENGINEERING SYSTEMS COMMAND
MAKALAPA, HAWAII
U.S. NAVSUPPACT
MCB CAMP BLAZ, GUAM
JFY 2022 PROJECT J-875
BATTLE STAFF TRAINING FACILITY
CHILLER ENCLOSURE PLAN, EXTERIOR ELEVATIONS, AND SECTION

SCALE: AS NOTED
EPROJECT NO.: 1696746
CONSTR. CONTR. NO.
NAVFAC DRAWING NO. 17321902
SHEET 106 OF 468
AS102

DRAWFORM REVISION: 25 AUGUST 2020

AS102
3/12/2026 9:13:23 PM
C:\Users\rbaintona\Documents\BLDG-875-1696746-A_rbaintonaF4LVN.rvt

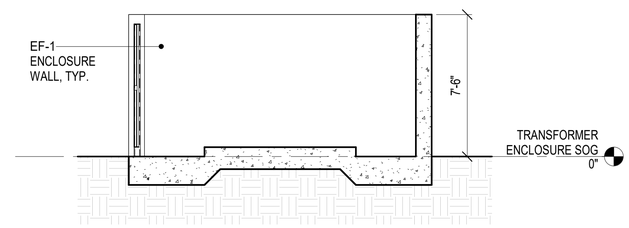

C3 SECTION

SCALE: 1/4" = 1'-0" (AS103)

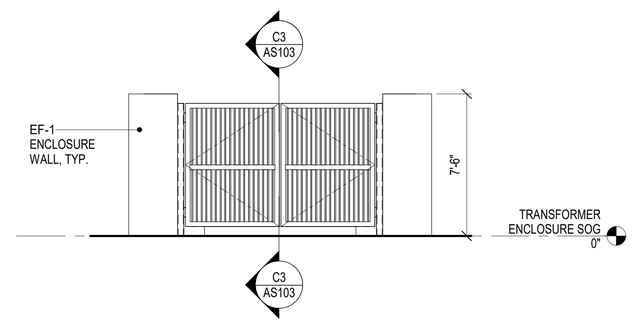

B3 EXTERIOR ELEVATION - NORTH

SCALE: 1/4" = 1'-0" (AS103)

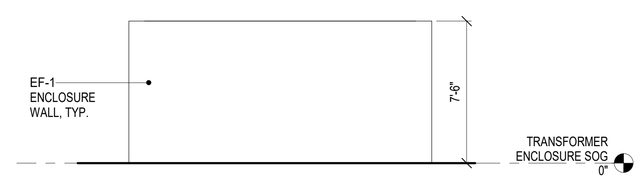

A3 EXTERIOR ELEVATION - EAST (SOUTH AND WEST SIM)

SCALE: 1/4" = 1'-0" (AS103)

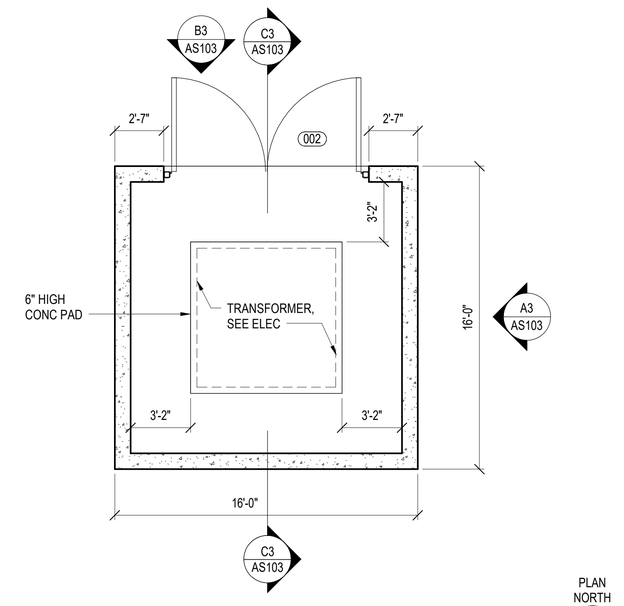

A5 TRANSFORMER ENCLOSURE FLOOR PLAN

SCALE: 1/4" = 1'-0" (AS101)

GRAPHIC SCALE(S)

1/4" = 1' - 0" 0 1' 5' 10' 15'

SYM	DESCRIPTION	DATE	APPR

NAVFAC

MYLES M. MICHIBATA
LICENSED PROFESSIONAL ARCHITECT
No. 12367
HAWAII, U.S.A.
LIC. EXP 04/30/26 BEA.

ASMD LLC.
A/E INFO

APPROVED
Evan Miyazaki
FOR COMMANDER NAVFAC

ACTIVITY
NATHANIEL PYRON, MILCON PLANNER, DPPH

SATISFACTORY TO DATE 3/10/2026

DES JG / RLB DRW RLB CHK JG
PM/DM DKS/DMK
BRANCH MANAGER KYM
CHIEF ENG/ARCH KYM
FIRE PROTECTION RYO

DEPARTMENT OF THE NAVY
NAVAL FACILITIES ENGINEERING COMMAND
NAVFAC PACIFIC
U.S. NAVSUPPACT

NAVAL FACILITIES ENGINEERING SYSTEMS COMMAND
NAVAL FACILITIES ENGINEERING SYSTEMS COMMAND ~ PACIFIC
MAKALAPA, HAWAII
MCB CAMP BLAZ, GUAM

JFY 2022 PROJECT J-875
BATTLE STAFF TRAINING FACILITY

TRANSFORMER ENCLOSURE PLAN, EXTERIOR ELEVATIONS, AND SECTION

SCALE: AS NOTED
EPROJECT NO.: 1696746
CONSTR. CONTR. NO.
NAVFAC DRAWING NO. 17321903
SHEET 107 OF 468

AS103

DRAWFORM REVISION: 25 AUGUST 2020

3/12/2026 9:13:24 PM AS103
C:\Users\rlbatterson\Documents\BLDG-875-1696746-A_rlbatterson-FALVN.rvt

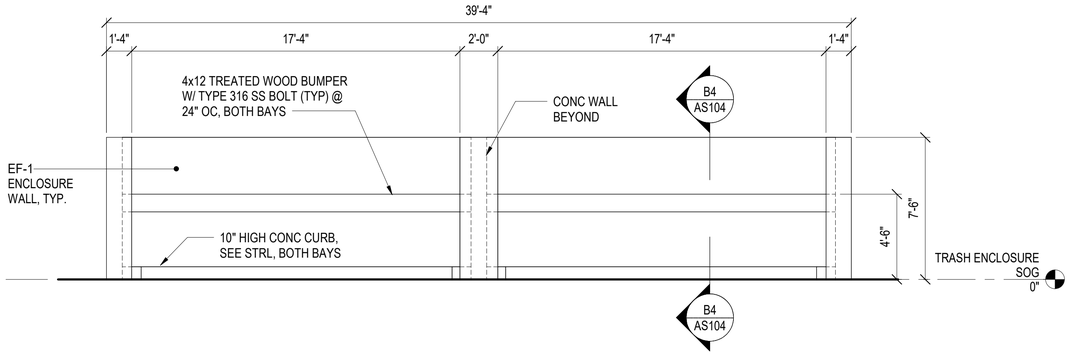

C1 EXTERIOR ELEVATION - NORTH

SCALE: 1/4" = 1'-0" (AS104)

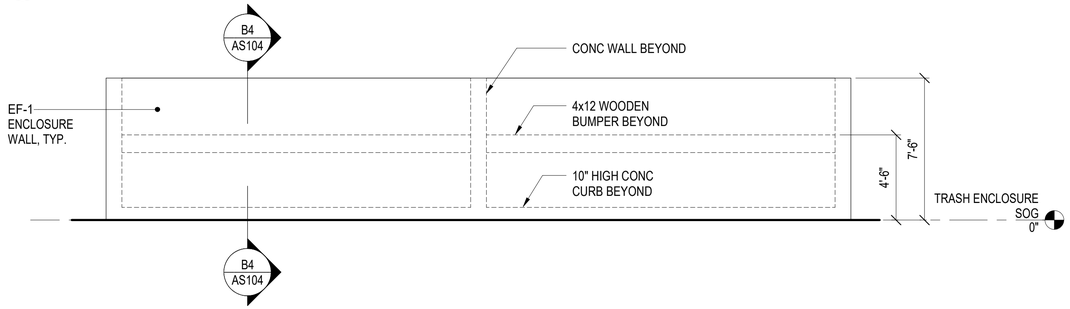

B1 EXTERIOR ELEVATION - SOUTH

SCALE: 1/4" = 1'-0" (AS104)

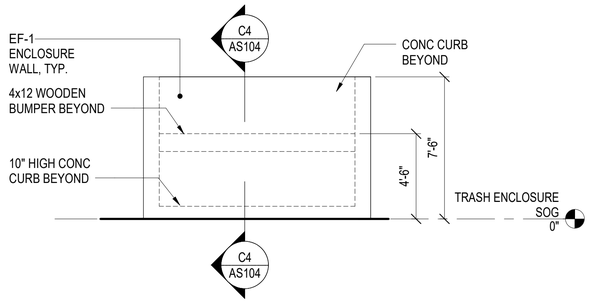

A2 EXTERIOR ELEVATION - EAST (WEST SIM)

SCALE: 1/4" = 1'-0" (AS104)

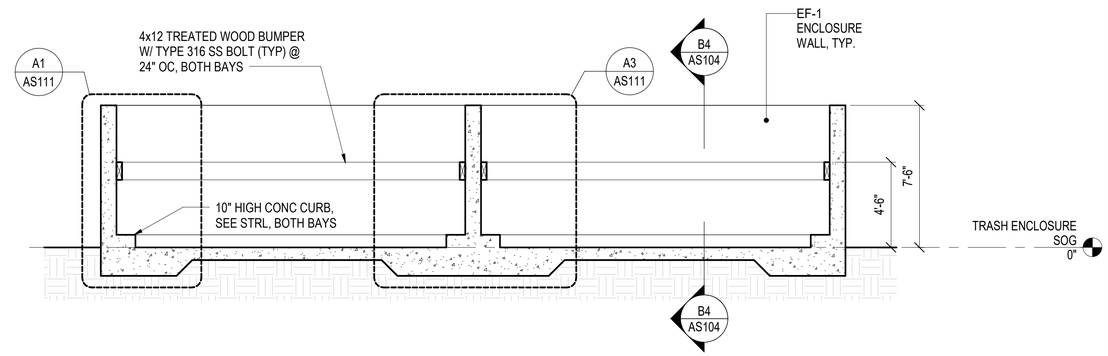

C4 TRANS ENCLOSURE LONGITUDINAL SECTION

SCALE: 1/4" = 1'-0" (AS104)

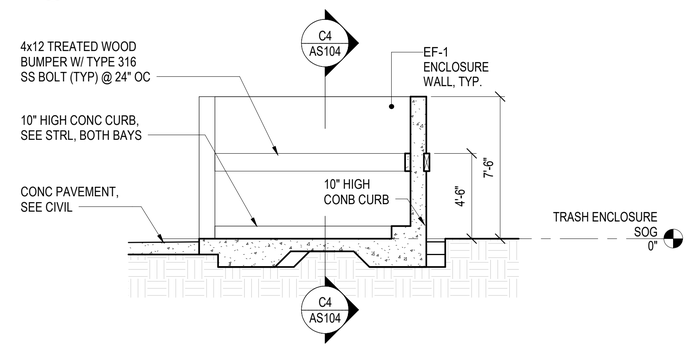

B4 TRANS ENCLOSURE CROSS SECTION

SCALE: 1/4" = 1'-0" (AS104)

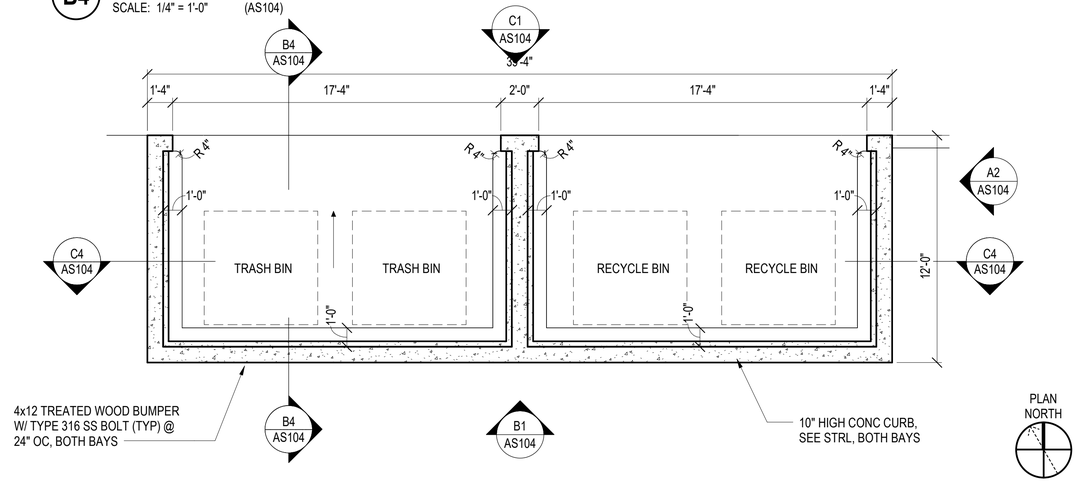

A4 TRASH ENCLOSURE FLOOR PLAN

SCALE: 1/4" = 1'-0" (AS101)

GRAPHIC SCALE(S)

1/4" = 1' - 0" 0 1' 5' 10' 15'

SYM	DESCRIPTION	DATE	APPR

NAVFAC

MYLES M. MICHIBATA LICENSED PROFESSIONAL ARCHITECT No. 12367 HAWAII, U.S.A.
LIC. EXP 04/30/26

ASMD LLC.

APPROVED
FOR COMMANDER NAVFAC

ACTIVITY
NATHANIEL PYRON, MILCON PLANNER, DPPH

SATISFACTORY TO DATE	3/10/2026
DES JG / RLB DRW RLB CHK JG	
PM/DM	DKS/DMK
BRANCH MANAGER	KYM
CHIEF ENG/ARCH	KYM
FIRE PROTECTION	RYO

DEPARTMENT OF THE NAVY
NAVAL FACILITIES ENGINEERING SYSTEMS COMMAND
NAVFAC PACIFIC
U.S. NAVSUPPACT

NAVAL FACILITIES ENGINEERING SYSTEMS COMMAND ~ PACIFIC
MAKALAPA, HAWAII

MCB CAMP BLAZ, GUAM

JFY 2022 PROJECT J-875
BATTLE STAFF TRAINING FACILITY

TRASH ENCLOSURE PLAN, EXTERIOR ELEVATIONS, AND SECTIONS

SCALE: AS NOTED
EPROJECT NO.: 1696746
CONSTR. CONTR. NO.
NAVFAC DRAWING NO. 17321904
SHEET 108 OF 468

AS104

DRAWFORM REVISION: 25 AUGUST 2020

3/12/2026 9:13:27 PM AS104
C:\Users\rlb\Bailmond\Documents\BLDG-875-1696746-A_rlbailmondFaFLVN.rvt

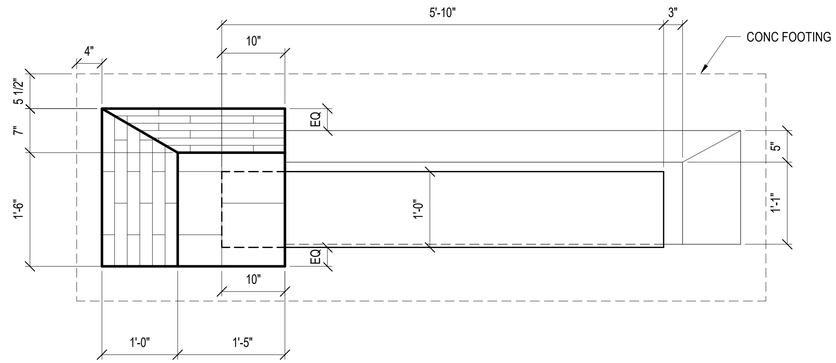

C1 EXTERIOR MONUMENT SIGN - PLAN

SCALE: 1" = 1'-0"

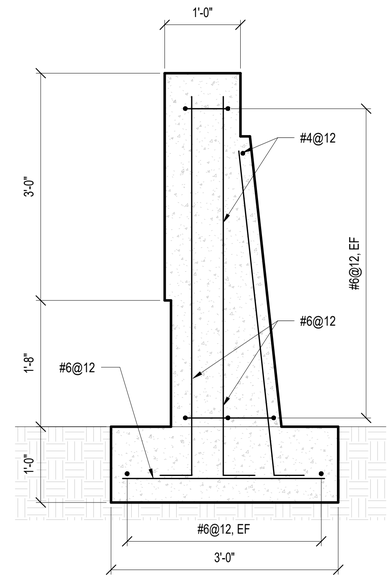

C3 EXTERIOR MONUMENT SIGN - SECTION

SCALE: 1" = 1'-0" (AS105)

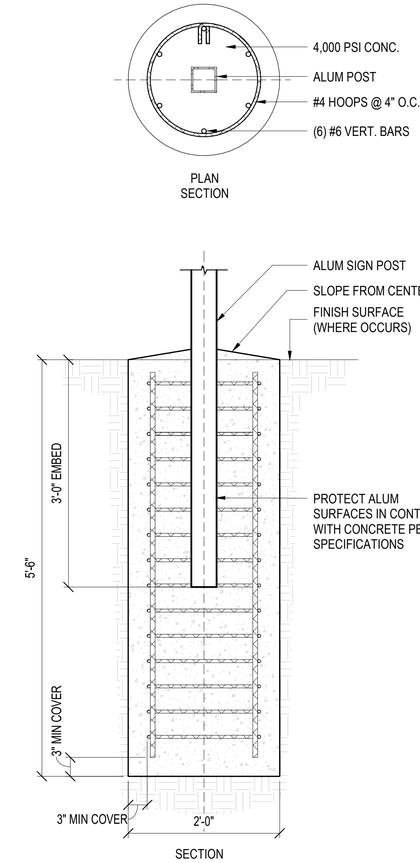

C4 EXTERIOR SIGN - FOOTING DETAILS

SCALE: 1" = 1'-0"

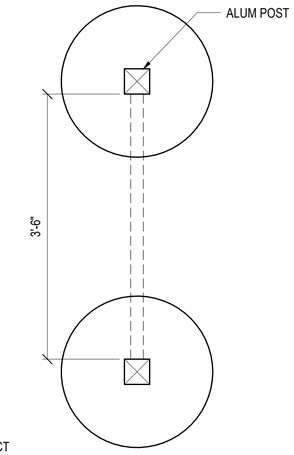

SIGNAGE PLAN

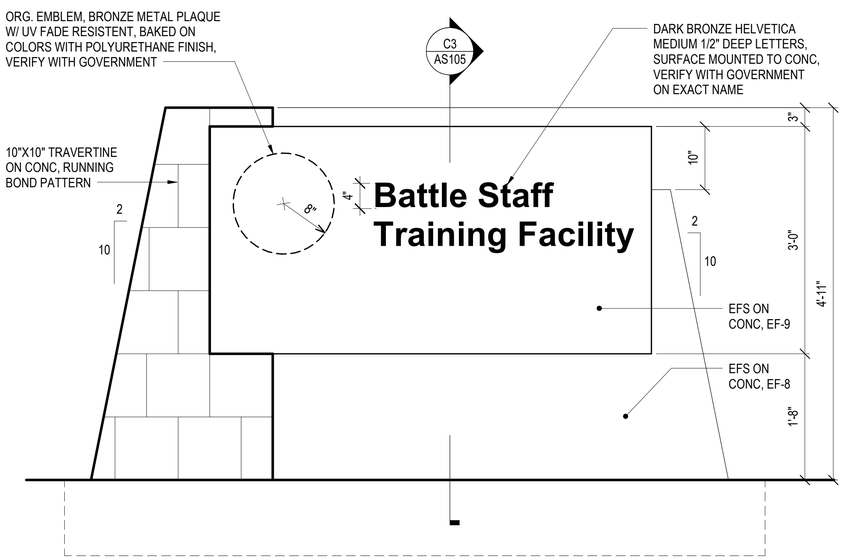

A1 EXTERIOR MONUMENT SIGN - ELEVATION

SCALE: 1" = 1'-0" (AS101)

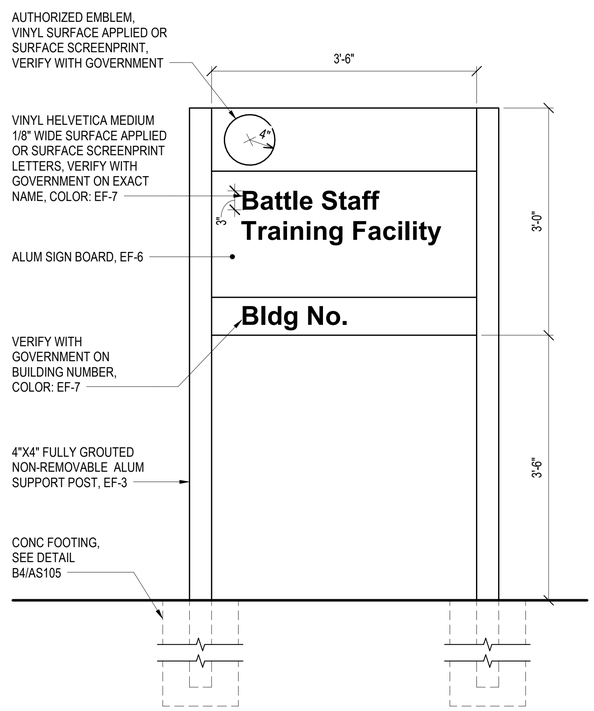

A3 EXTERIOR SIGN - ELEVATION

SCALE: 1" = 1'-0" (AS101)

GRAPHIC SCALE(S)

1" = 1' - 0" 0 6" 1' 2' 3'

SYM	DESCRIPTION	DATE	APPR

NAVFAC

MYLES M. MICHIBATA LICENSED PROFESSIONAL ARCHITECT No. 12367 HAWAII, U.S.A.
LIC. EXP 04/30/26

ASMD LLC.

APPROVED
FOR COMMANDER NAVFAC

ACTIVITY
NATHANIEL PYRON, MILCON PLANNER, DPPH
SATISFACTORY TO DATE 3/10/2026
DES JG / RLB DRW RLB CHK JG
PM/DM DKS/DMK
BRANCH MANAGER KYM
CHIEF ENG/ARCH KYM
FIRE PROTECTION RYO

DEPARTMENT OF THE NAVY
NAVFAC PACIFIC
NAVAL FACILITIES ENGINEERING SYSTEMS COMMAND ~ PACIFIC
NAVAL FACILITIES ENGINEERING SYSTEMS COMMAND
MAKALAPA, HAWAII
U.S. NAVSUPPACT
MCB CAMP BLAZ, GUAM
JFY 2022 PROJECT J-875
BATTLE STAFF TRAINING FACILITY
SITE SIGNAGE

SCALE: AS NOTED
EPROJECT NO.: 1696746
CONSTR. CONTR. NO.
NAVFAC DRAWING NO. 17321905
SHEET 109 OF 468
AS105

DRAWFORM REVISION: 25 AUGUST 2020

3/12/2026 9:13:27 PM AS105
C:\Users\rtBallinton\Documents\BLDG-875-1696746-A_rtballintonsaFaLVN.rvt

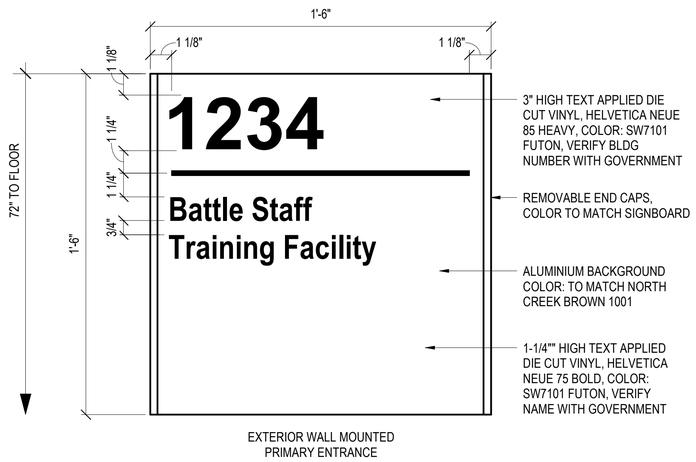

B2 ENTRY SIGN

SCALE: 3" = 1'-0"

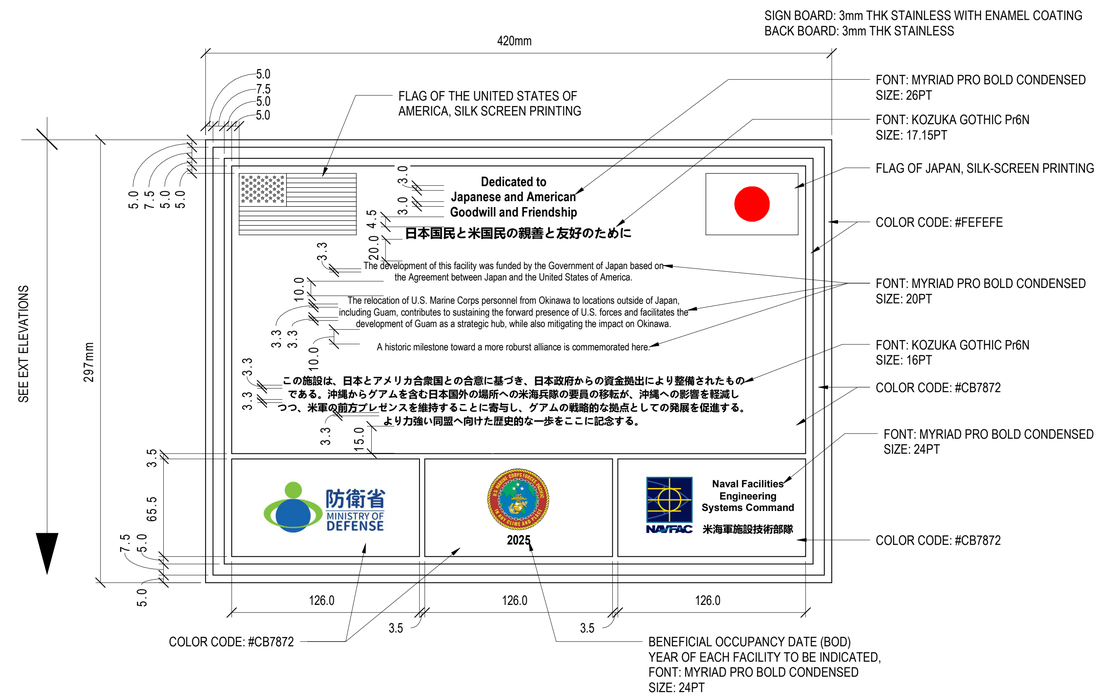

B4 FACILITY RECOGNITION PLAQUE

SCALE: 6" = 1'-0"

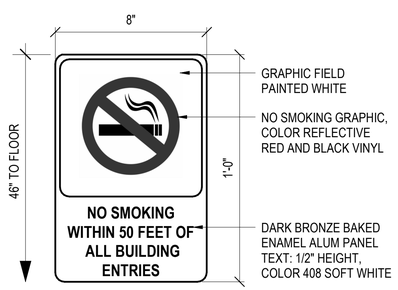

A2 NO SMOKING SIGN

SCALE: 3" = 1'-0"

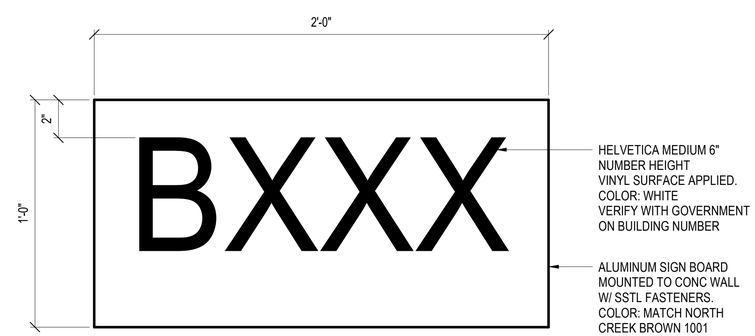

A3 BUILDING NUMBER SIGN

SCALE: 3" = 1'-0"

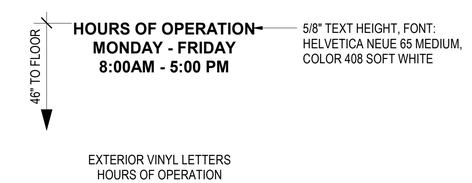

A5 HOURS OF OPERATION SIGN

SCALE: 3" = 1'-0"

GRAPHIC SCALE(S)

6" = 1' - 0" 0 1" 2" 4" 6"

3" = 1' - 0" 0 3" 6" 1'

SYM	DESCRIPTION	DATE	APPR

NAVFAC

MYLES M. MICHIBATA
LICENSED PROFESSIONAL ARCHITECT
No. 12367
HAWAII, U.S.A.
LIC. EXP 04/30/26

ASMD LLC.
AE INFO

APPROVED
FOR COMMANDER NAVFAC

ACTIVITY
NATHANIEL PYRON, MILCON PLANNER, DPPH

SATISFACTORY TO DATE	3/10/2026
DES JG / RLB DRW RLB CHK JG	
PM/DM	DKS/DMK
BRANCH MANAGER	KYM
CHIEF ENG/ARCH	KYM
FIRE PROTECTION	RYO

DEPARTMENT OF THE NAVY
NAVAL FACILITIES ENGINEERING SYSTEMS COMMAND ~ PACIFIC
NAVFAC PACIFIC
U.S. NAVSUPPACT
NAVAL FACILITIES ENGINEERING SYSTEMS COMMAND
MAKALAPA, HAWAII
MCB CAMP BLAZ, GUAM
JFY 2022 PROJECT J-875
BATTLE STAFF TRAINING FACILITY
BUILDING SIGNAGE

SCALE: AS NOTED
EPROJECT NO.: 1696746
CONSTR. CONTR. NO.
NAVFAC DRAWING NO. 17321906
SHEET 110 OF 468
AS106

DRAWFORM REVISION: 25 AUGUST 2020

AS106
3/12/2026 9:13:28 PM
C:\Users\BeMonroe\Documents\BLDG-875-1696746-A_rbuilintionsFdLVN.rvt

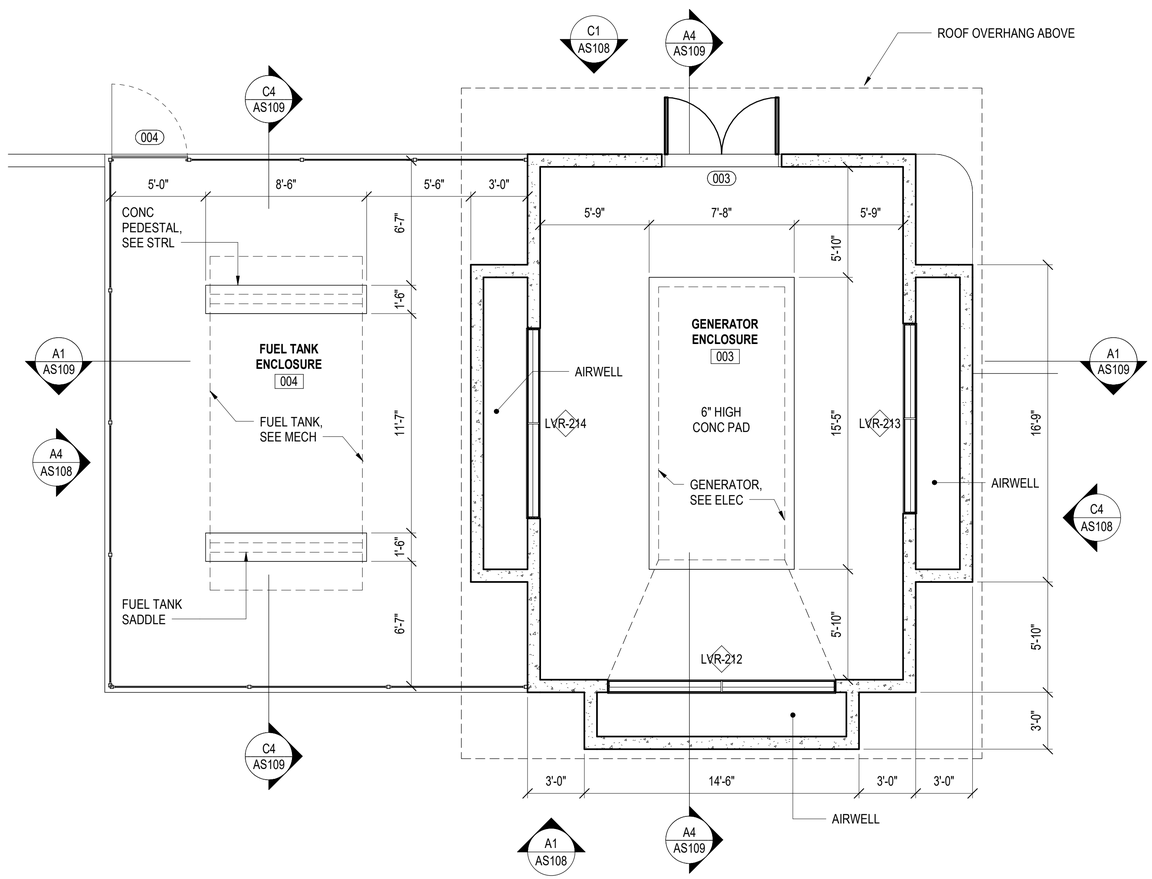

A1 GENERATOR & FUEL TANK ENCLOSURE PLAN

SCALE: 1/4" = 1'-0" (AS101)

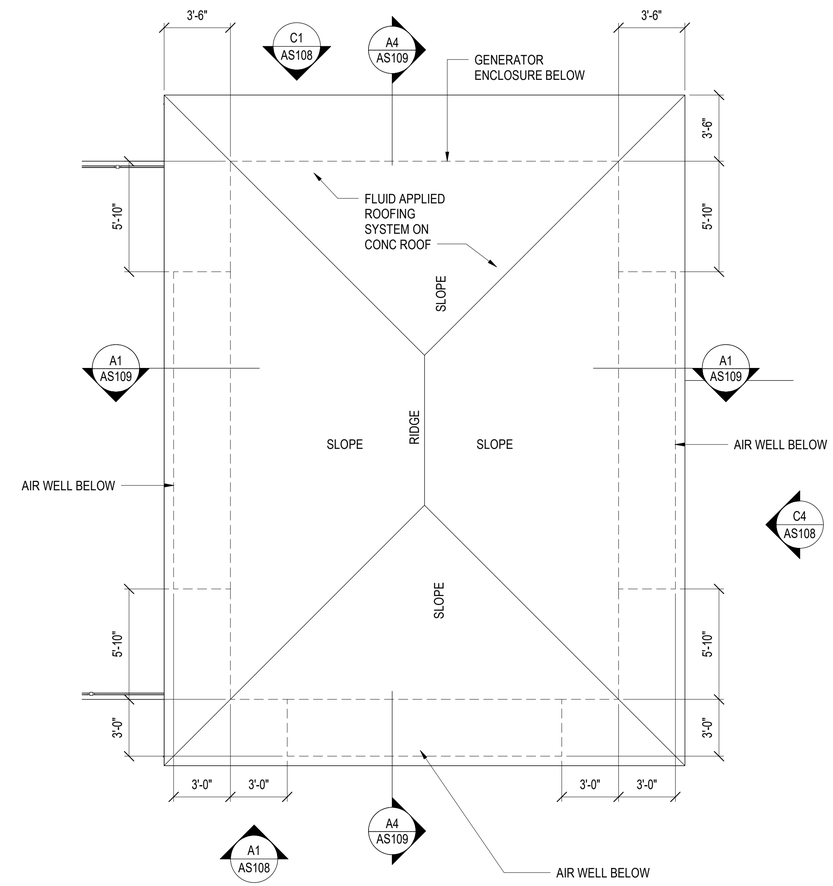

A4 GENERATOR & FUEL TANK ENCLOSURE ROOF PLAN

SCALE: 1/4" = 1'-0" (AS103)

PLAN NORTH

GRAPHIC SCALE(S)

1/4" = 1' - 0" 0 1' 5' 10' 15'

SYM	DESCRIPTION	DATE	APPR

NAVFAC

MYLES M. MICHIBATA LICENSED PROFESSIONAL ARCHITECT No. 12367 HAWAII, U.S.A.
LIC. EXP 04/30/26 SEAL

ASMD LLC. A/E INFO

APPROVED
FOR COMMANDER NAVFAC

ACTIVITY
NATHANIEL PYRON, MILCON PLANNER, DPPH

SATISFACTORY TO DATE 3/10/2026

DES JG / RLB	DRW RLB	CHK JG	
PM/DM	DKS/DMK		
BRANCH MANAGER	KYM		
CHIEF ENG/ARCH	KYM		
FIRE PROTECTION	RYO		

DEPARTMENT OF THE NAVY
NAVFAC PACIFIC
NAVAL FACILITIES ENGINEERING SYSTEMS COMMAND
NAVAL FACILITIES ENGINEERING SYSTEMS COMMAND – PACIFIC
MAKALAPA, HAWAII
U.S. NAVSUPPACT
MCB CAMP BLAZ, GUAM

JFY 2022 PROJECT J-875
BATTLE STAFF TRAINING FACILITY

GENERATOR & FUEL TANK ENCLOSURE PLAN AND ROOF PLAN, OPTION ITEM #2

SCALE: AS NOTED
EPROJECT NO.: 1696746
CONSTR. CONTR. NO.

NAVFAC DRAWING NO.
17321907

SHEET 111 OF 468

AS107

DRAWFORM REVISION: 25 AUGUST 2020

AS107
3/12/2026 11:58:24 PM
C:\Users\tBallmond\Documents\BLDG-J875-1696746-A_rbaintonsFE4LVN.rvt

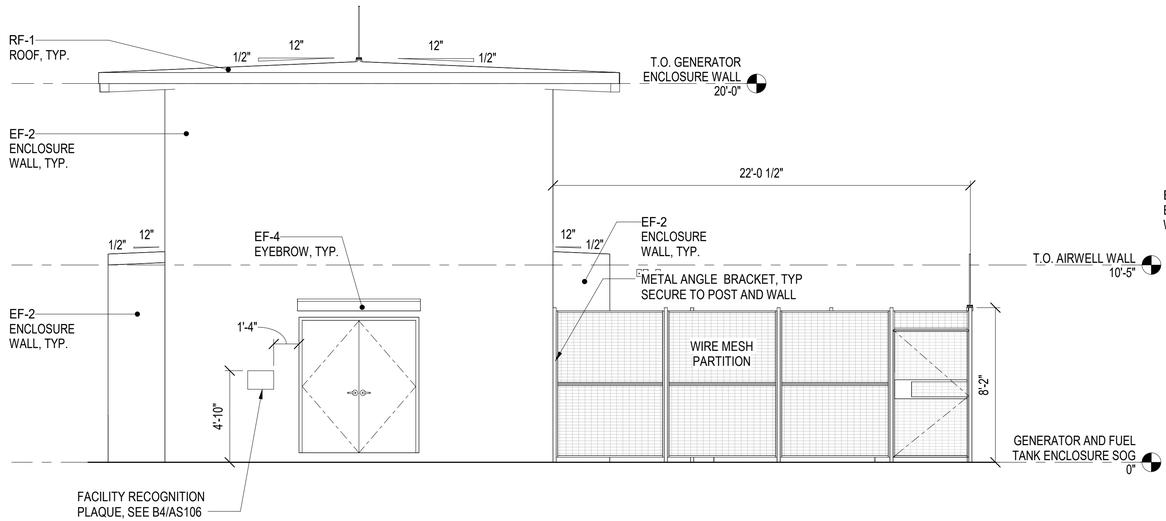

C1 GENERATOR & FUEL TANK ENCLOSURE - NORTH ELEVATION

SCALE: 1/4" = 1'-0" (AS107)

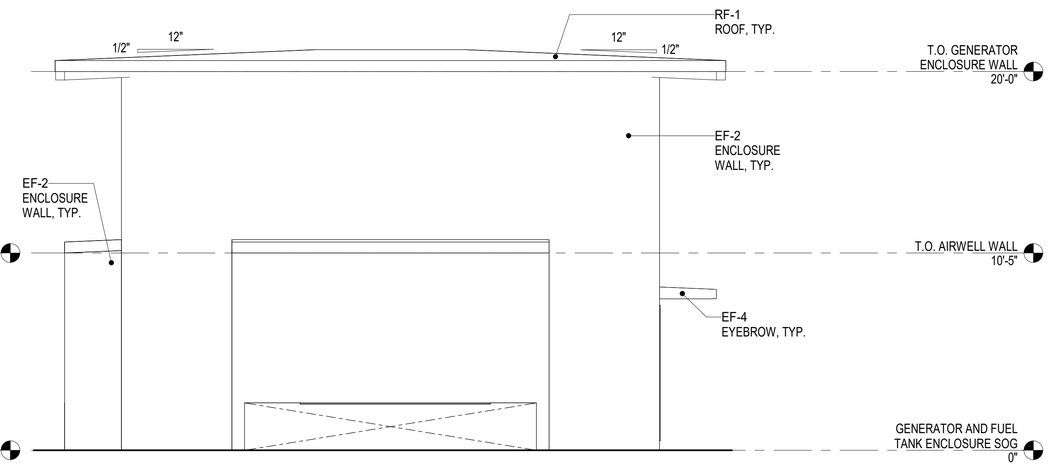

C4 GENERATOR & FUEL TANK ENCLOSURE - WEST ELEVATION

SCALE: 1/4" = 1'-0" (AS107)

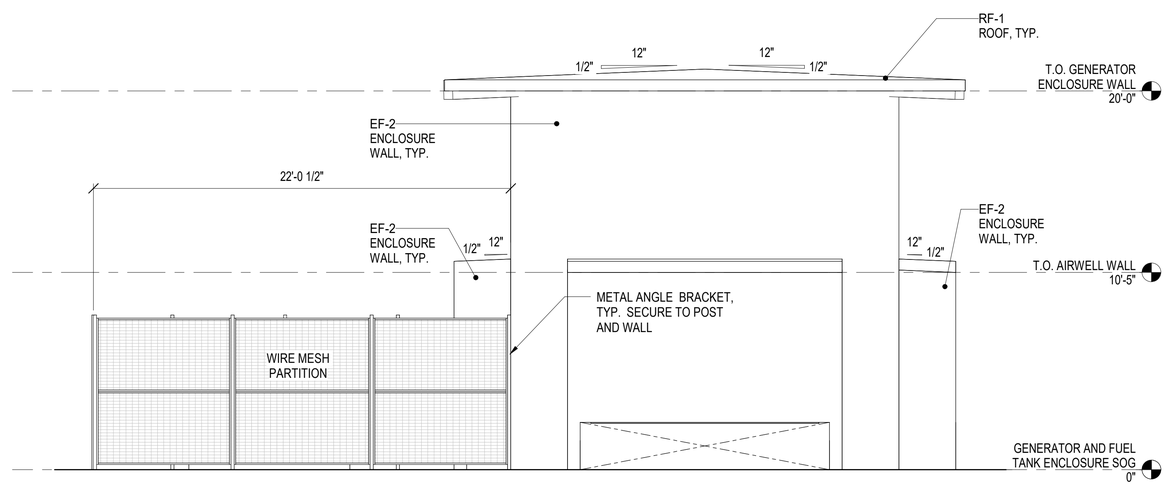

A1 GENERATOR & FUEL TANK ENCLOSURE - SOUTH ELEVATION

SCALE: 1/4" = 1'-0" (AS107)

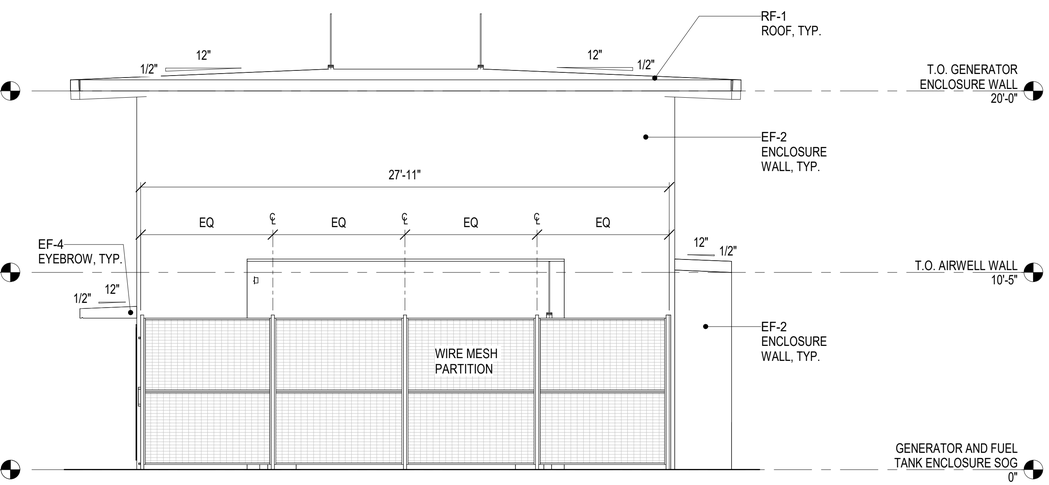

A4 GENERATOR & FUEL TANK ENCLOSURE - EAST ELEVATION

SCALE: 1/4" = 1'-0" (AS107)

GRAPHIC SCALE(S)

1/4" = 1' - 0" 0 1' 5' 10' 15'

SYM	DESCRIPTION	DATE	APPR

NAVFAC

MYLES M. MICHIBATA LICENSED PROFESSIONAL ARCHITECT No. 12367 HAWAII, U.S.A.
LIC. EXP 04/30/26

ASMD LLC. A/E INFO

APPROVED
Evan Mizel
FOR COMMANDER NAVFAC

ACTIVITY
NATHANIEL PYRON, MILCON PLANNER, DPPH

SATISFACTORY TO DATE 3/10/2026

DES JG / RLB	DRW RLB	CHK JG	
PM/DM	DKS/DMK		
BRANCH MANAGER	KYM		
CHIEF ENG/ARCH	KYM		
FIRE PROTECTION	RYO		

DEPARTMENT OF THE NAVY
NAVAL FACILITIES ENGINEERING SYSTEMS COMMAND
NAVFAC PACIFIC
U.S. NAVSUPPACT

NAVAL FACILITIES ENGINEERING SYSTEMS COMMAND – PACIFIC
MAKALAPA, HAWAII

MCB CAMP BLAZ, GUAM

JFY 2022 PROJECT J-875
BATTLE STAFF TRAINING FACILITY

GENERATOR & FUEL TANK ENCLOSURE ELEVATIONS, OPTION ITEM #2

SCALE: AS NOTED
EPROJECT NO.: 1696746
CONSTR. CONTR. NO.
NAVFAC DRAWING NO. 17321908
SHEET 112 OF 468

AS108

DRAWFORM REVISION: 25 AUGUST 2020

AS108
3/12/2026 9:13:31 PM
C:\Users\Bamonte\Documents\BLDG-875-1696746-A_rbaintionsnF4LVN.rvt

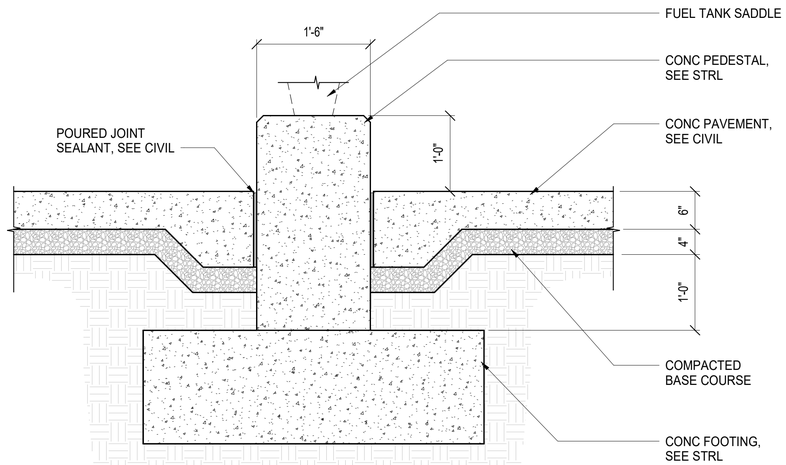

C1 CONC PEDESTAL DETAIL

SCALE: 1" = 1'-0" (AS109)

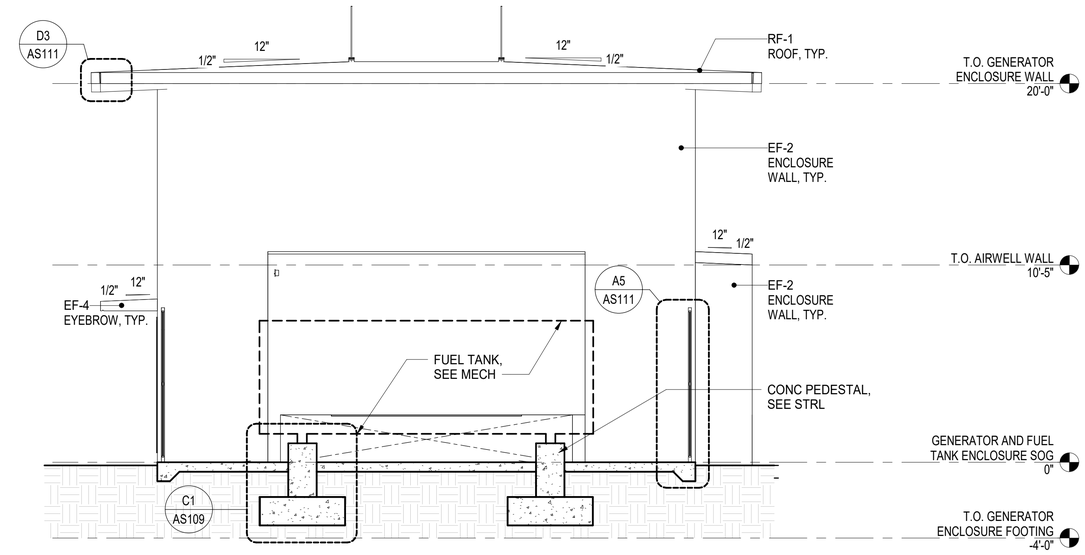

C4 GENERATOR & FUEL TANK SECTION

SCALE: 1/4" = 1'-0" (AS107)

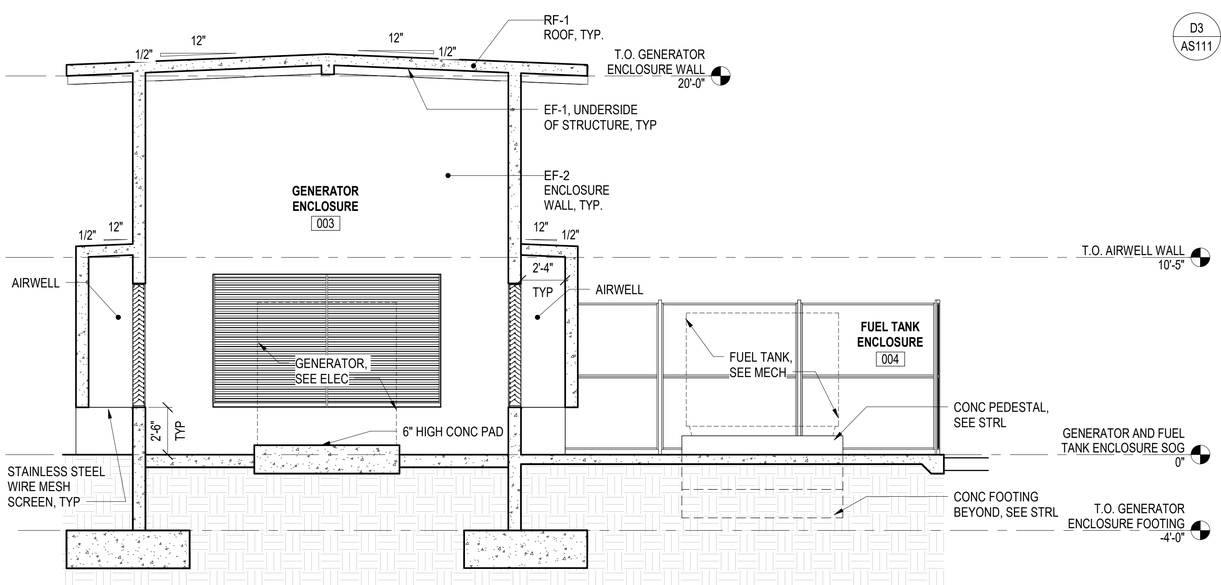

A1 GENERATOR & FUEL TANK SECTION

SCALE: 1/4" = 1'-0" (AS107)

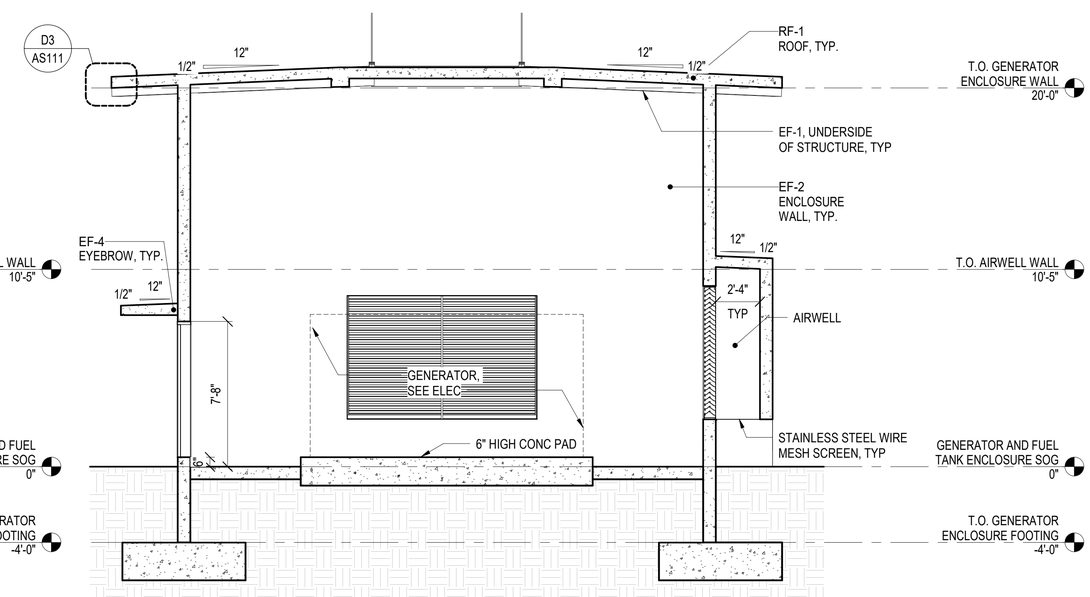

A4 GENERATOR & FUEL TANK SECTION

SCALE: 1/4" = 1'-0" (AS107)

GRAPHIC SCALE(S)

1/4" = 1' - 0" 0 1' 5' 10' 15'

SYM	DESCRIPTION	DATE	APPR

NAVFAC

MYLES M. MICHIBATA LICENSED PROFESSIONAL ARCHITECT No. 12367 HAWAII, U.S.A.
LIC. EXP 04/30/26

ASMD LLC. A/E INFO

APPROVED
FOR COMMANDER NAVFAC

ACTIVITY
NATHANIEL PYRON, MILCON PLANNER, DPPH

SATISFACTORY TO DATE 3/10/2026
DES JG / RLB DRW RLB CHK JG
PM/DM DKS/DMK
BRANCH MANAGER KYM
CHIEF ENG/ARCH KYM
FIRE PROTECTION RYO

DEPARTMENT OF THE NAVY
NAVAL FACILITIES ENGINEERING SYSTEMS COMMAND
NAVFAC PACIFIC
U.S. NAVSUPPACT
NAVAL FACILITIES ENGINEERING SYSTEMS COMMAND ~ PACIFIC
MAKALAPA, HAWAII
MCB CAMP BLAZ, GUAM
JFY 2022 PROJECT J-875
BATTLE STAFF TRAINING FACILITY
GENERATOR & FUEL TANK ENCLOSURE SECTIONS, OPTION ITEM #2

SCALE: AS NOTED
EPROJECT NO.: 1696746
CONSTR. CONTR. NO.
NAVFAC DRAWING NO. 17321909
SHEET 113 OF 468
AS109

DRAWFORM REVISION: 25 AUGUST 2020

3/12/2026 9:13:32 PM AS109
C:\Users\BaliMonai\Documents\BLDG-J875-1696746-A_rbalimtonaF4LVN.rvt

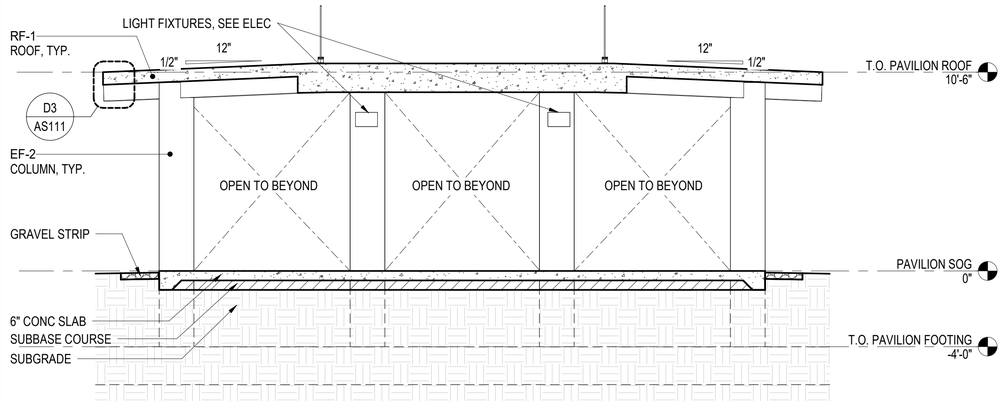

D1 PAVILION SECTION

SCALE: 1/4" = 1'-0" (AS110)

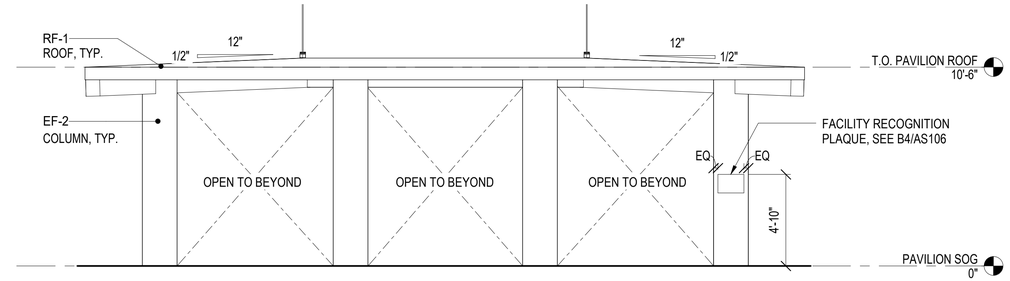

D3 EAST ELEVATION (WEST SIM)

SCALE: 1/4" = 1'-0" (AS110)

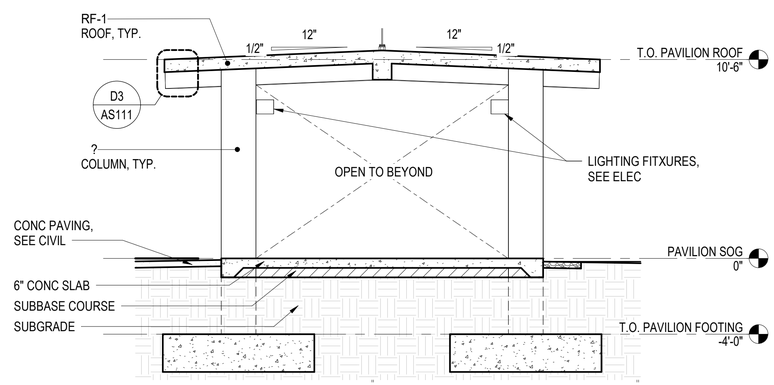

B1 PAVILION SECTION

SCALE: 1/4" = 1'-0" (AS110)

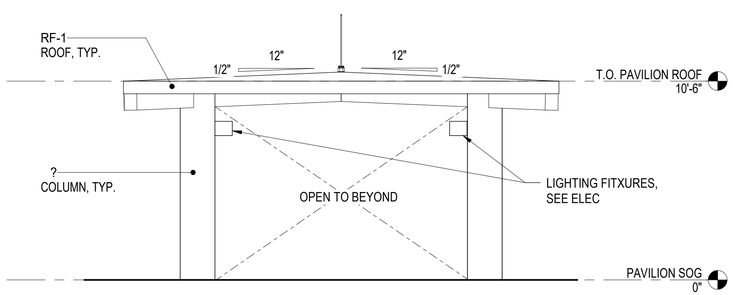

A1 NORTH ELEVATION (SOUTH SIM)

SCALE: 1/4" = 1'-0" (AS110)

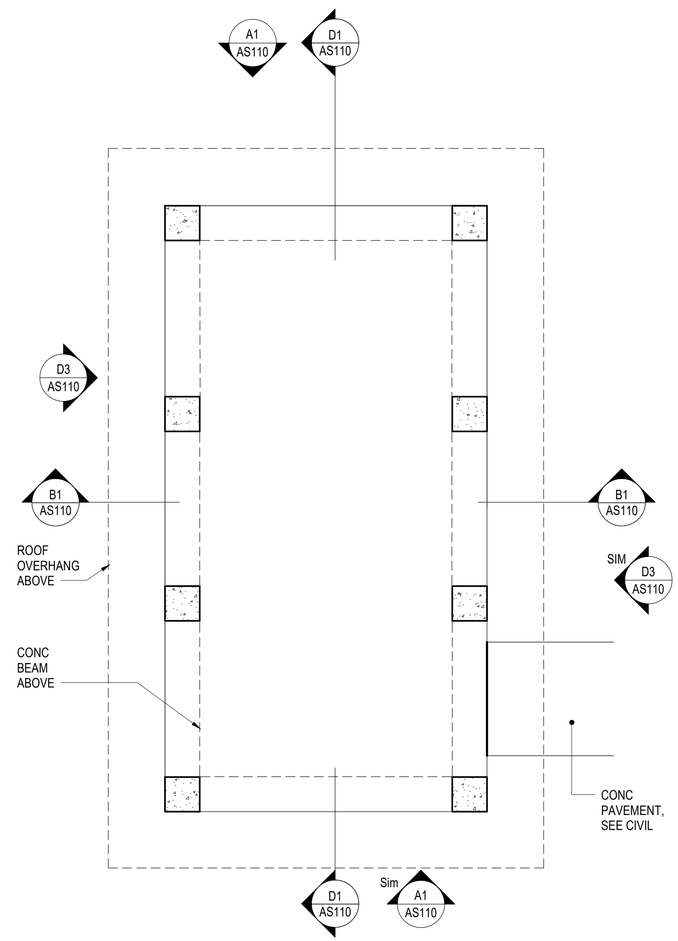

A3 PAVILION PLAN

SCALE: 1/4" = 1'-0" (AS101)

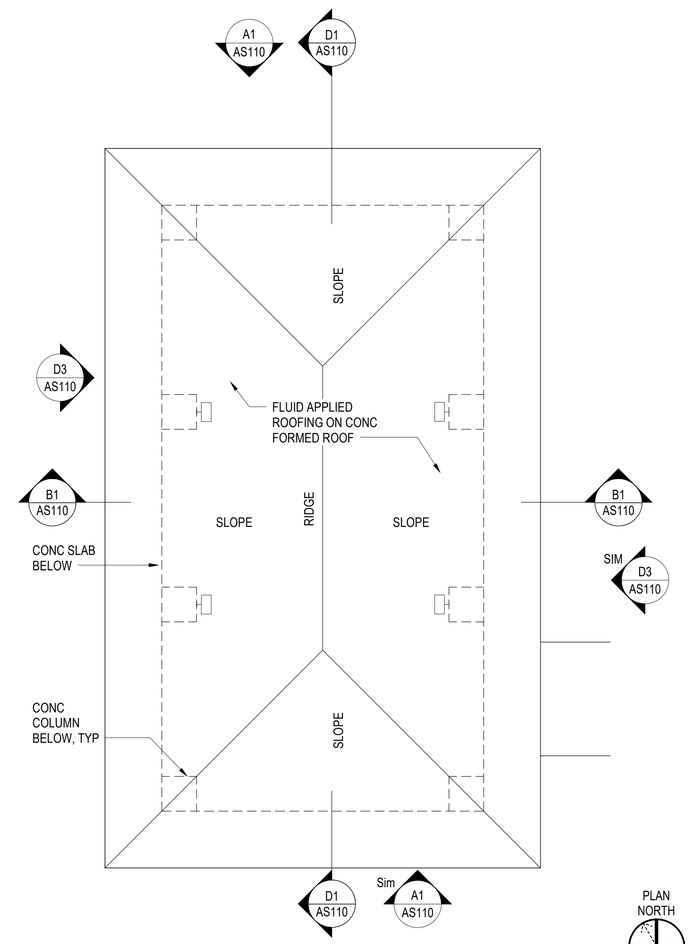

A4 PAVILION ROOF PLAN

SCALE: 1/4" = 1'-0" (AS104)

GRAPHIC SCALE(S)

1/4" = 1' - 0" 0 1' 5' 10' 15'

SYM	DESCRIPTION	DATE	APPR

NAVFAC

MYLES M. MICHIBATA LICENSED PROFESSIONAL ARCHITECT No. 12367 HAWAII, U.S.A.
LIC. EXP 04/30/26 SEAL

ASMD LLC. A/E INFO

APPROVED
Evan Mizel
FOR COMMANDER NAVFAC

ACTIVITY
NATHANIEL PYRON, MILCON PLANNER, DPPH

SATISFACTORY TO DATE	3/10/2026
DES JG / RLB DRW RLB CHK JG	
PM/DM	DKS/DMK
BRANCH MANAGER	KYM
CHIEF ENG/ARCH	KYM
FIRE PROTECTION	RYO

DEPARTMENT OF THE NAVY
NAVAL FACILITIES ENGINEERING SYSTEMS COMMAND
NAVFAC PACIFIC
U.S. NAVSUPPACT

NAVAL FACILITIES ENGINEERING SYSTEMS COMMAND ~ PACIFIC
MAKALAPA, HAWAII
MCB CAMP BLAZ, GUAM

JFY 2022 PROJECT J-875
BATTLE STAFF TRAINING FACILITY

PAVILION PLANS, ELEVATIONS & SECTIONS, OPTION ITEM #1

SCALE: AS NOTED
EPROJECT NO.: 1696746
CONSTR. CONTR. NO.
NAVFAC DRAWING NO.
17321910
SHEET 114 OF 468
AS110

DRAWFORM REVISION: 25 AUGUST 2020

3/12/2026 9:13:34 PM AS110
C:\Users\BeMonte\Documents\BLDG-875-1696746-A_rbuilntionsnFdLVN.rvt

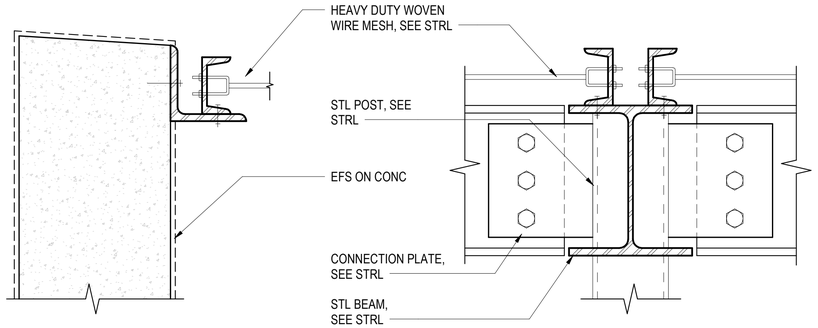

D1 WIRE MESH @ CONC WALL
SCALE: 3" = 1'-0" (AS102)

D2 WIRE MESH @ POST
SCALE: 3" = 1'-0" (AS102)

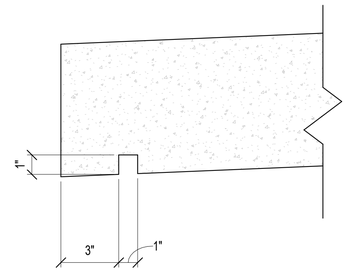

D3 DRIP EDGE DETAIL
SCALE: 3" = 1'-0" (AS109)

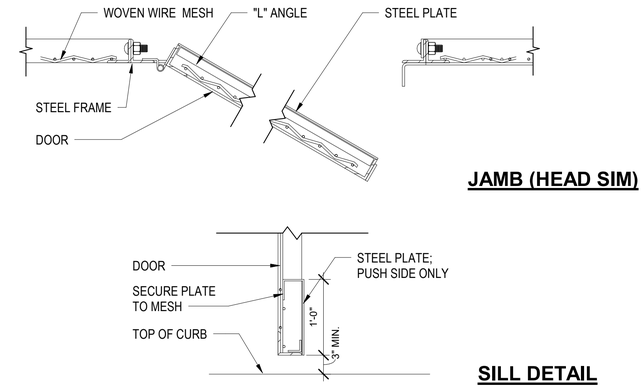

D5 DOOR @ MESH WALL
SCALE: 1" = 1'-0"

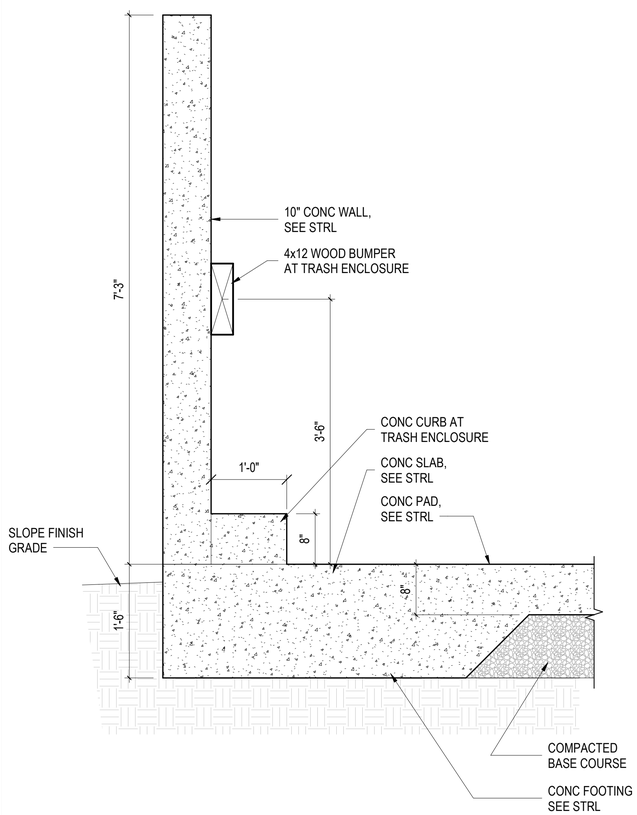

A1 CONC WALL SECTION
SCALE: 1" = 1'-0" (AS104)

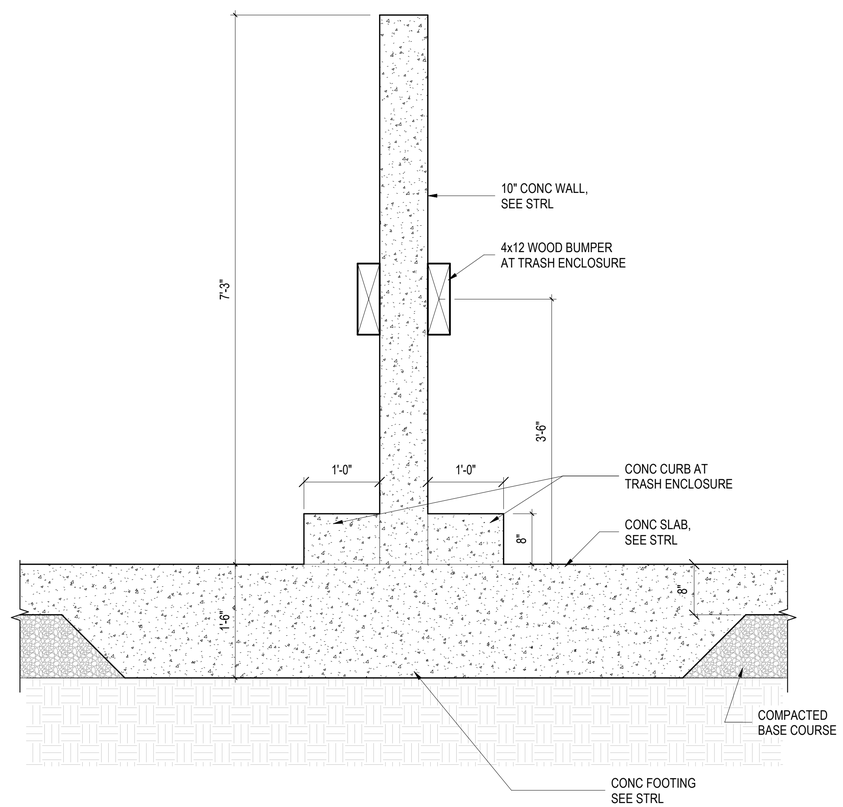

A3 CONC WALL SECTION
SCALE: 1" = 1'-0" (AS104)

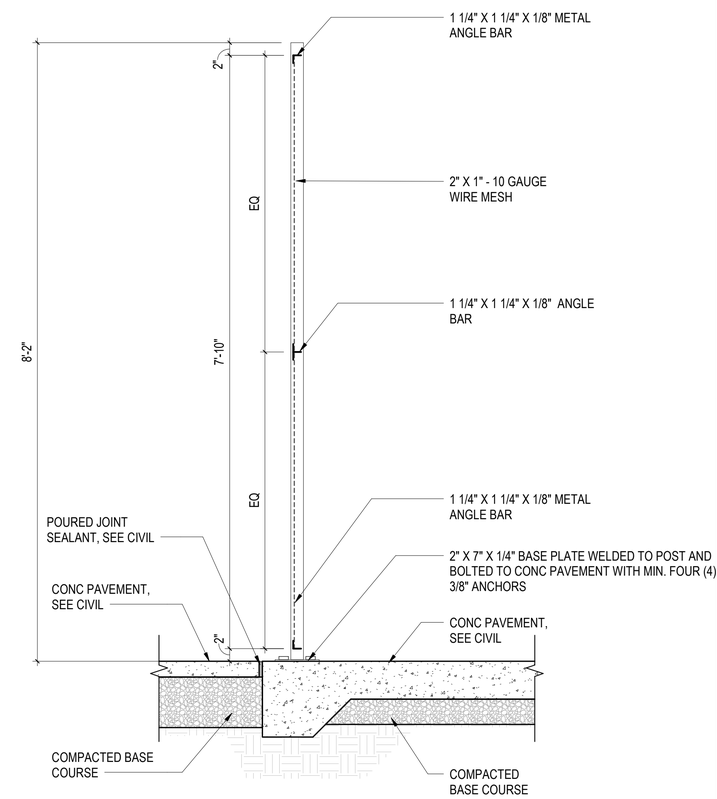

A5 CURB/FENCE SECTION
SCALE: 1" = 1'-0" (AS109)

GRAPHIC SCALE(S)
1" = 1' - 0" 0 6" 1' 2' 3'
3" = 1' - 0" 0 3" 6" 1'

SYM	DESCRIPTION	DATE	APPR

NAVFAC

MYLES M. MICHIBATA LICENSED PROFESSIONAL ARCHITECT No. 12367 HAWAII, U.S.A.
LIC. EXP 04/30/26 SEAL

ASMD LLC. A/E INFO

APPROVED
FOR COMMANDER NAVFAC

ACTIVITY
NATHANIEL PYRON, MILCON PLANNER, DPPH
SATISFACTORY TO DATE 3/10/2026
DES JG / RLB DRW RLB CHK JG
PM/DM DKS/DMK
BRANCH MANAGER KYM
CHIEF ENG/ARCH KYM
FIRE PROTECTION RYO

DEPARTMENT OF THE NAVY
NAVAL FACILITIES ENGINEERING SYSTEMS COMMAND
NAVFAC PACIFIC
U.S. NAVSUPPACT
NAVAL FACILITIES ENGINEERING SYSTEMS COMMAND ~ PACIFIC
MAKALAPA, HAWAII
MCB CAMP BLAZ, GUAM
JFY 2022 PROJECT J-875
BATTLE STAFF TRAINING FACILITY
SITE DETAILS

SCALE: AS NOTED
EPROJECT NO.: 1696746
CONSTR. CONTR. NO.
NAVFAC DRAWING NO. 17321911
SHEET 115 OF 468
AS111
DRAWFORM REVISION: 25 AUGUST 2020

AS111
3/12/2026 9:13:35 PM
C:\Users\tbaltrons\Documents\BLDG-875-1696746-A_rbaltrons-FE4LVN.rvt

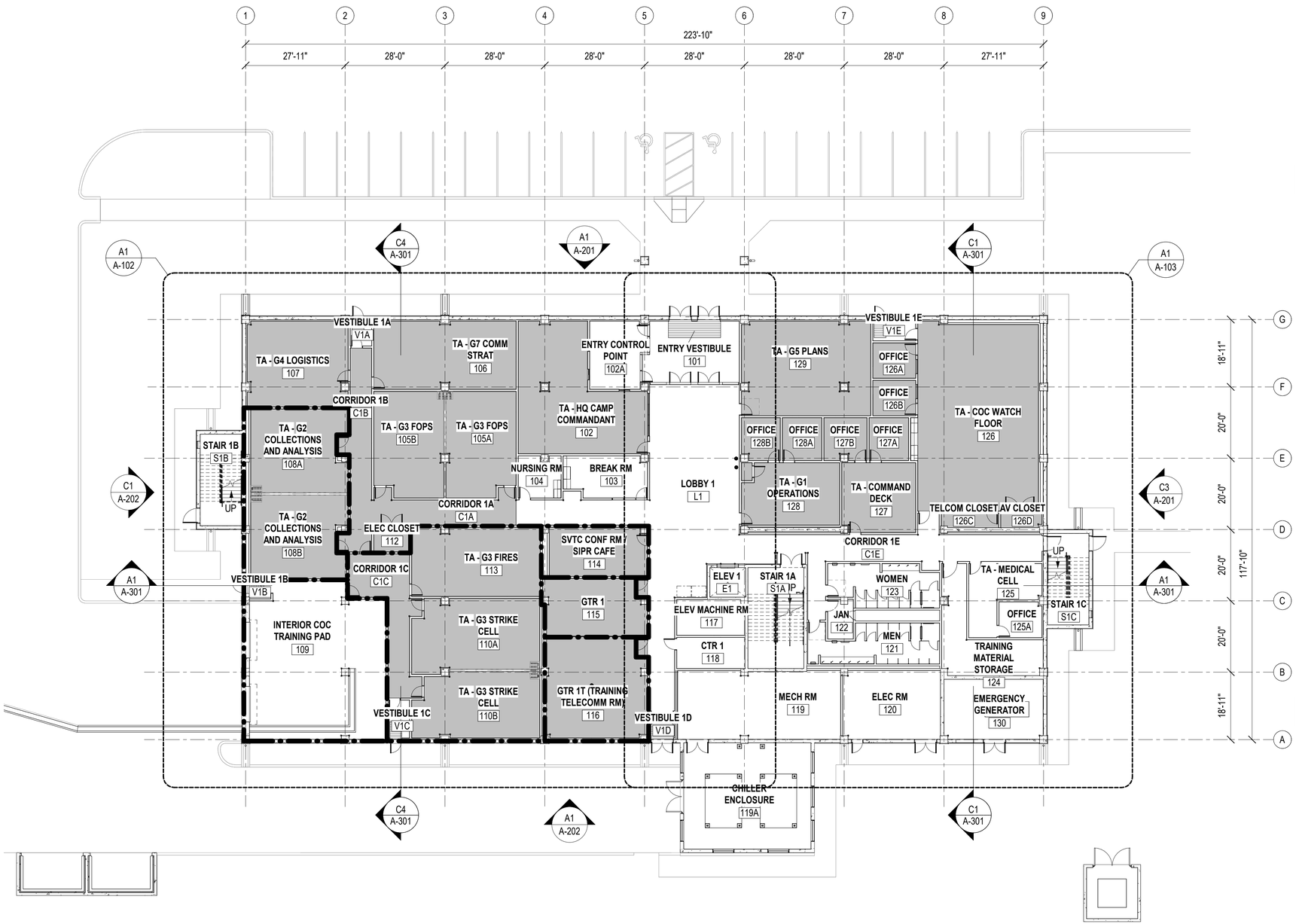

A1 OVERALL FIRST FLOOR PLAN

SCALE: 1/16" = 1'-0"

GENERAL SHEET NOTES

1. REFER TO SHEET A-502 FOR PARTITION TYPES.
2. REFET TO SHEET A-750 FOR DOWNSPOUT DETAILS.
3. REFER TO SHEET A-730 FOR CORNER GUARD, FIRE EXTINGUISHER CABINETS, RAISED ACCESS FLOORING, AND FLOOR DRAIN DETAILS.

OVERALL FLOOR PLAN LEGEND

SYMBOL	DESCRIPTION
	RAISED ACCESS FLOORING
	SECURED AREA BOUNDARY

KEY PLAN

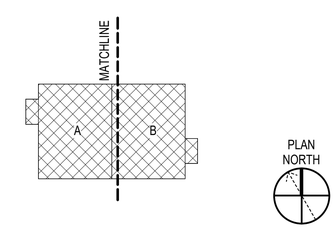

GRAPHIC SCALE(S)

1/16" = 1' - 0" 0 5' 10' 20' 30' 60'

SYM	DESCRIPTION	DATE	APPR

NAVFAC

MYLES M. MICHIBATA LICENSED PROFESSIONAL ARCHITECT No. 12367 HAWAII, U.S.A.
LIC. EXP 04/30/26

ASMD LLC.
A/E INFO

APPROVED
FOR COMMANDER NAVFAC

ACTIVITY
NATHANIEL PYRON, MILCON PLANNER, DPPH

SATISFACTORY TO DATE 3/10/2026
DES JG / RLB DRW RLB CHK JG
PMDM DKS/DMK
BRANCH MANAGER KYM
CHIEF ENG/ARCH KYM
FIRE PROTECTION RYO

DEPARTMENT OF THE NAVY
NAVFAC PACIFIC
NAVAL FACILITIES ENGINEERING SYSTEMS COMMAND ~ PACIFIC
U.S. NAVSUPPACT
NAVAL FACILITIES ENGINEERING SYSTEMS COMMAND
MAKALAPA, HAWAII
MCB CAMP BLAZ, GUAM
JFY 2022 PROJECT J-875
BATTLE STAFF TRAINING FACILITY
OVERALL FIRST FLOOR PLAN

SCALE: AS NOTED
EPROJECT NO.: 1696746
CONSTR. CONTR. NO.

NAVFAC DRAWING NO.
17321912

SHEET 116 OF 468
A-101

DRAWFORM REVISION: 25 AUGUST 2020

A-101
3/12/2026 9:11:54 PM
C:\Users\tBaintona\Documents\BLDG-J875-1696746-A_rbaintonaF4LVN.rvt

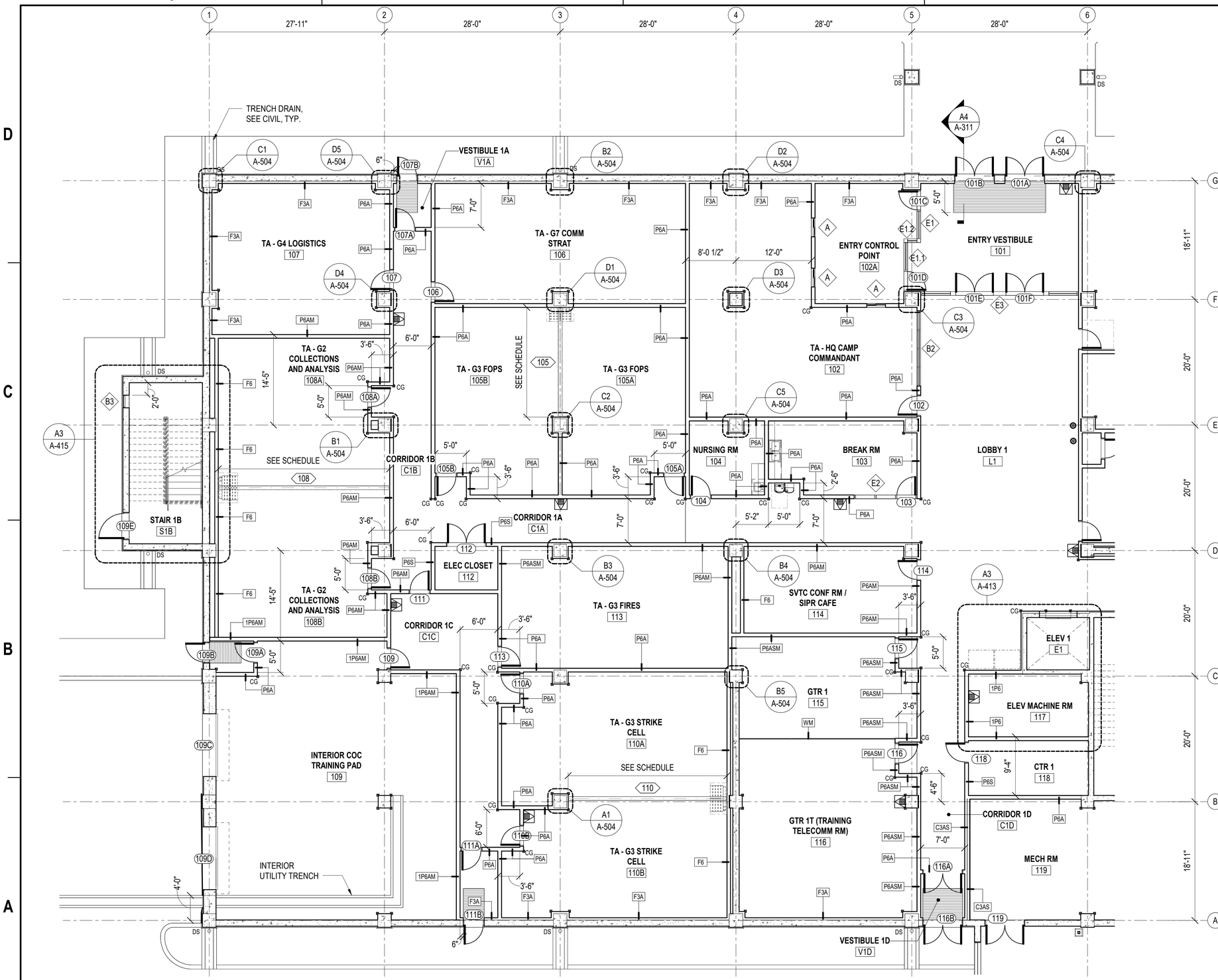

A1 ENLARGED FLOOR PLAN - 1A

SCALE: 1/8" = 1'-0" (A-101)

GENERAL SHEET NOTES

1. REFER TO SHEET A-502 FOR PARTITION TYPES.
2. REFET TO SHEET A-750 FOR DOWNSPOUT DETAILS.
3. REFER TO SHEET A-730 FOR CORNER GUARD, FIRE EXTINGUISHER CABINETS, RAISED ACCESS FLOORING, AND FLOOR DRAIN DETAILS.

FLOOR PLAN LEGEND

SYMBOL	DESCRIPTION
	CONC WALL
	PARTITION OR FURRED WALL
X	GRIDLINE
CG	CORNER GUARD
	RECESSED ENTRY FLOOR MAT
ROOMNAME 101	ROOM NAME AND NUMBER
101	DOOR NUMBER SYMBOL
A1 A-101	SECTION/ELEVATION
P1	PARTITION TYPE
A1 A-101 SIM	DETAIL REFERENCE
A	WINDOW SYMBOL
DS	DOWNSPOUT
FD	FLOOR DRAIN, SEE PLUMBING
FEC	FIRE EXTINGUISHER CABINET
KB	KNOX BOX
101	OPERABLE PARTITION TAG

KEY PLAN

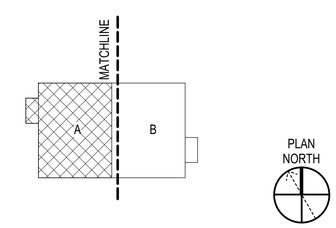

GRAPHIC SCALE(S)

1/8" = 1' - 0" 0 5' 10' 15' 30'

SYM	DESCRIPTION	DATE	APPR

NAVFAC

MYLES M. MICHIBATA LICENSED PROFESSIONAL ARCHITECT No. 12367 HAWAII, U.S.A.
LIC. EXP 04/30/26 SEAL

ASMD LLC. A/E INFO

APPROVED Evan Miyazal FOR COMMANDER NAVFAC

ACTIVITY: NATHANIEL PYRON, MILCON PLANNER, DPPH
SATISFACTORY TO DATE 3/10/2026
DES JG / RLB DRW RLB CHK JG
PM/DM DKS/DMK
BRANCH MANAGER KYM
CHIEF ENG/ARCH KYM
FIRE PROTECTION RYO

DEPARTMENT OF THE NAVY
NAVFAC PACIFIC
NAVAL FACILITIES ENGINEERING SYSTEMS COMMAND ~ PACIFIC
NAVAL FACILITIES ENGINEERING SYSTEMS COMMAND
MAKALAPA, HAWAII
U.S. NAVSUPPACT
MCB CAMP BLAZ, GUAM
JFY 2022 PROJECT J-875
BATTLE STAFF TRAINING FACILITY
ENLARGED FLOOR PLAN - 1A

SCALE: AS NOTED
EPROJECT NO.: 1696746
CONSTR. CONTR. NO.
NAVFAC DRAWING NO. 17321913
SHEET 117 OF 468

A-102

DRAWFORM REVISION: 25 AUGUST 2020

3/12/2026 9:11:55 PM A-102
C:\Users\rbillarmona\Documents\BLDG-875-1696746-A_rbaintonaFALVN.rvt

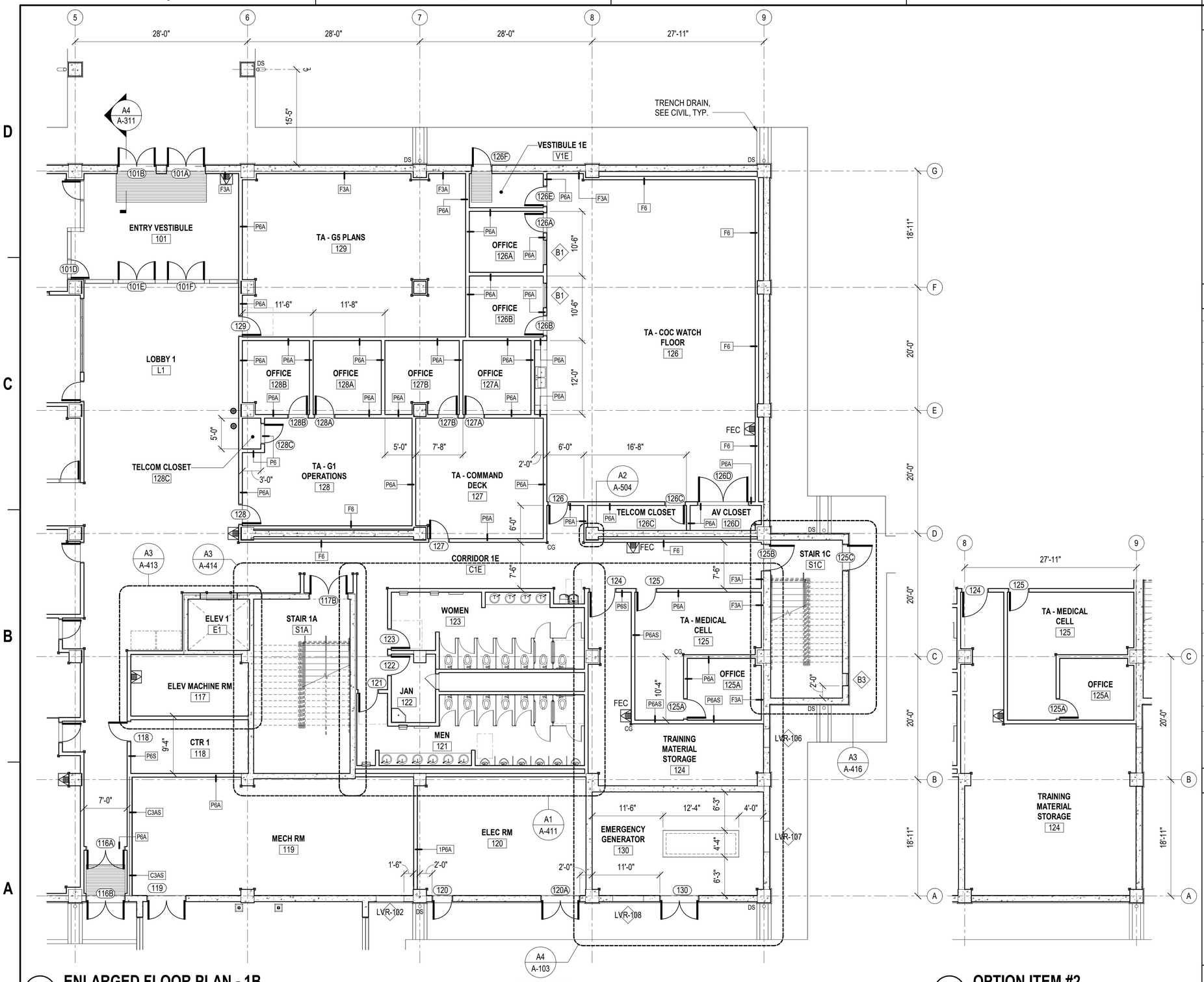

A1 ENLARGED FLOOR PLAN - 1B

SCALE: 1/8" = 1'-0" (A-101)

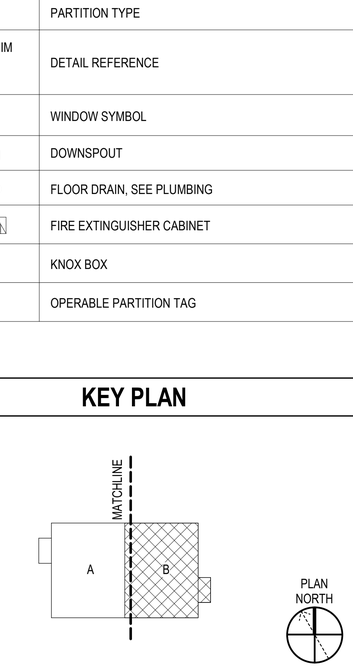

A4 OPTION ITEM #2

SCALE: 1/8" = 1'-0" (A-103)

GENERAL SHEET NOTES

1. REFER TO SHEET A-502 FOR PARTITION TYPES.
2. REFET TO SHEET A-750 FOR DOWNSPOUT DETAILS.
3. REFER TO SHEET A-730 FOR CORNER GUARD, FIRE EXTINGUISHER CABINETS, RAISED ACCESS FLOORING, AND FLOOR DRAIN DETAILS.

FLOOR PLAN LEGEND

SYMBOL	DESCRIPTION
	CONC WALL
	PARTITION OR FURRED WALL
X	GRIDLINE
CG	CORNER GUARD
	RECESSED ENTRY FLOOR MAT
ROOMNAME 101	ROOM NAME AND NUMBER
101	DOOR NUMBER SYMBOL
A1 A-101	SECTION/ELEVATION
P1	PARTITION TYPE
A1 A-101 SIM	DETAIL REFERENCE
A	WINDOW SYMBOL
DS	DOWNSPOUT
FD	FLOOR DRAIN, SEE PLUMBING
FEC	FIRE EXTINGUISHER CABINET
KB	KNOX BOX
101	OPERABLE PARTITION TAG

KEY PLAN

GRAPHIC SCALE(S)

1/8" = 1' - 0" 0 5' 10' 15' 30'

SYM	DESCRIPTION	DATE	APPR

NAVFAC

MYLES M. MICHIBATA LICENSED PROFESSIONAL ARCHITECT No. 12367 HAWAII, U.S.A.
LIC. EXP 04/30/26

ASMD LLC. AE INFO

APPROVED
FOR COMMANDER NAVFAC

ACTIVITY
NATHANIEL PYRON, MILCON PLANNER, DPPH

SATISFACTORY TO DATE 3/10/2026

DES JG / RLB DRW RLB CHK JG
PM/DM DKS/DMK
BRANCH MANAGER KYM
CHIEF ENG/ARCH KYM
FIRE PROTECTION RYO

DEPARTMENT OF THE NAVY
NAVAL FACILITIES ENGINEERING SYSTEMS COMMAND ~ PACIFIC
NAVFAC PACIFIC
U.S. NAVSUPPACT
NAVAL FACILITIES ENGINEERING SYSTEMS COMMAND
MAKALAPA, HAWAII
MCB CAMP BLAZ, GUAM

JFY 2022 PROJECT J-875
BATTLE STAFF TRAINING FACILITY

ENLARGED FLOOR PLAN - 1B & OPTION ITEM #2

SCALE: AS NOTED
EPROJECT NO.: 1696746
CONSTR. CONTR. NO.
NAVFAC DRAWING NO. 17321914
SHEET 118 OF 468

A-103

DRAWFORM REVISION: 25 AUGUST 2020

3/12/2026 9:11:56 PM
C:\Users\rtbaritona\Documents\BLDG-875-1696746-A_rtbaritonaF4LVN.rvt
A-103

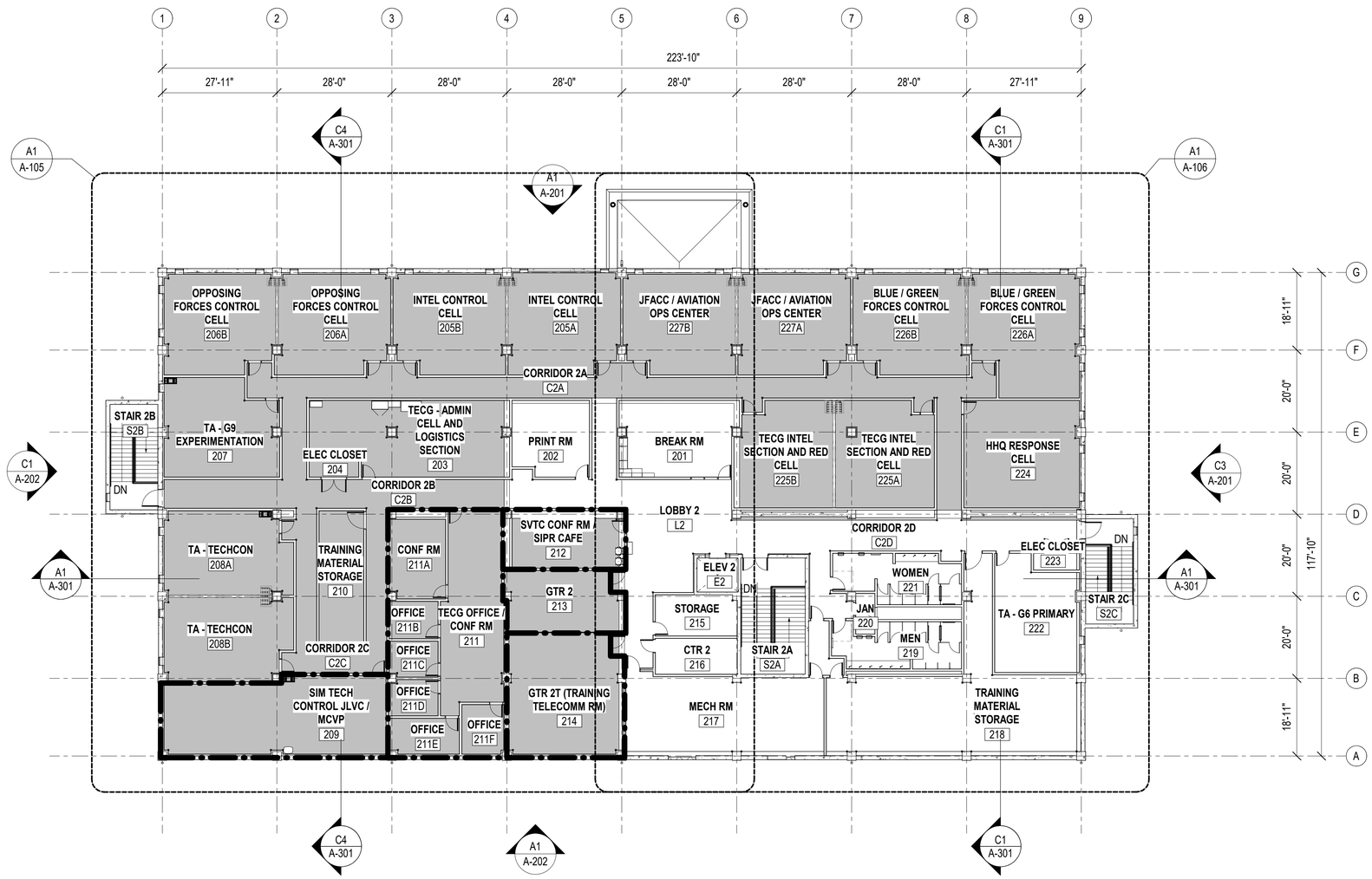

A1 OVERALL SECOND FLOOR PLAN

SCALE: 1/16" = 1'-0" (A-201)

GENERAL SHEET NOTES

1. REFER TO SHEET A-502 FOR PARTITION TYPES.
2. REFET TO SHEET A-750 FOR DOWNSPOUT DETAILS.
3. REFER TO SHEET A-730 FOR CORNER GUARD, FIRE EXTINGUISHER CABINETS, RAISED ACCESS FLOORING, AND FLOOR DRAIN DETAILS.

OVERALL FLOOR PLAN LEGEND

SYMBOL	DESCRIPTION
	RAISED ACCESS FLOORING
	SECURED AREA BOUNDARY

KEY PLAN

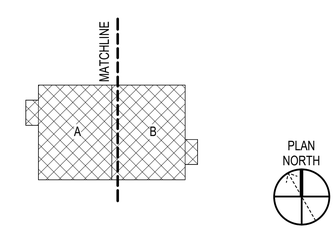

GRAPHIC SCALE(S)

1/16" = 1' - 0" 0 5' 10' 20' 30' 60'

SYM	DESCRIPTION	DATE	APPR

NAVFAC

MYLES M. MICHIBATA LICENSED PROFESSIONAL ARCHITECT No. 12367 HAWAII, U.S.A.
LIC. EXP 04/30/26 SEAL

ASMD LLC. A/E INFO

APPROVED
Evan Miyazal
FOR COMMANDER NAVFAC
ACTIVITY
NATHANIEL PYRON, MILCON PLANNER, DPPH
SATISFACTORY TO DATE 3/10/2026
DES JG / RLB DRW RLB CHK JG
PMDM DKS/DMK
BRANCH MANAGER KYM
CHIEF ENG/ARCH KYM
FIRE PROTECTION RYO

DEPARTMENT OF THE NAVY
NAVFAC PACIFIC
NAVAL FACILITIES ENGINEERING SYSTEMS COMMAND ~ PACIFIC
NAVAL FACILITIES ENGINEERING SYSTEMS COMMAND
MAKALAPA, HAWAII
U.S. NAVSUPPACT
MCB CAMP BLAZ, GUAM
JFY 2022 PROJECT J-875
BATTLE STAFF TRAINING FACILITY
OVERALL SECOND FLOOR PLAN

SCALE: AS NOTED
EPROJECT NO.: 1696746
CONSTR. CONTR. NO.
NAVFAC DRAWING NO. 17321915
SHEET 119 OF 468
A-104

DRAWFORM REVISION: 25 AUGUST 2020

A-104
3/12/2026 9:11:58 PM
C:\Users\dbainton\AppDocuments\BLDG-875-1696746-A_rbainton\FALVN.rvt

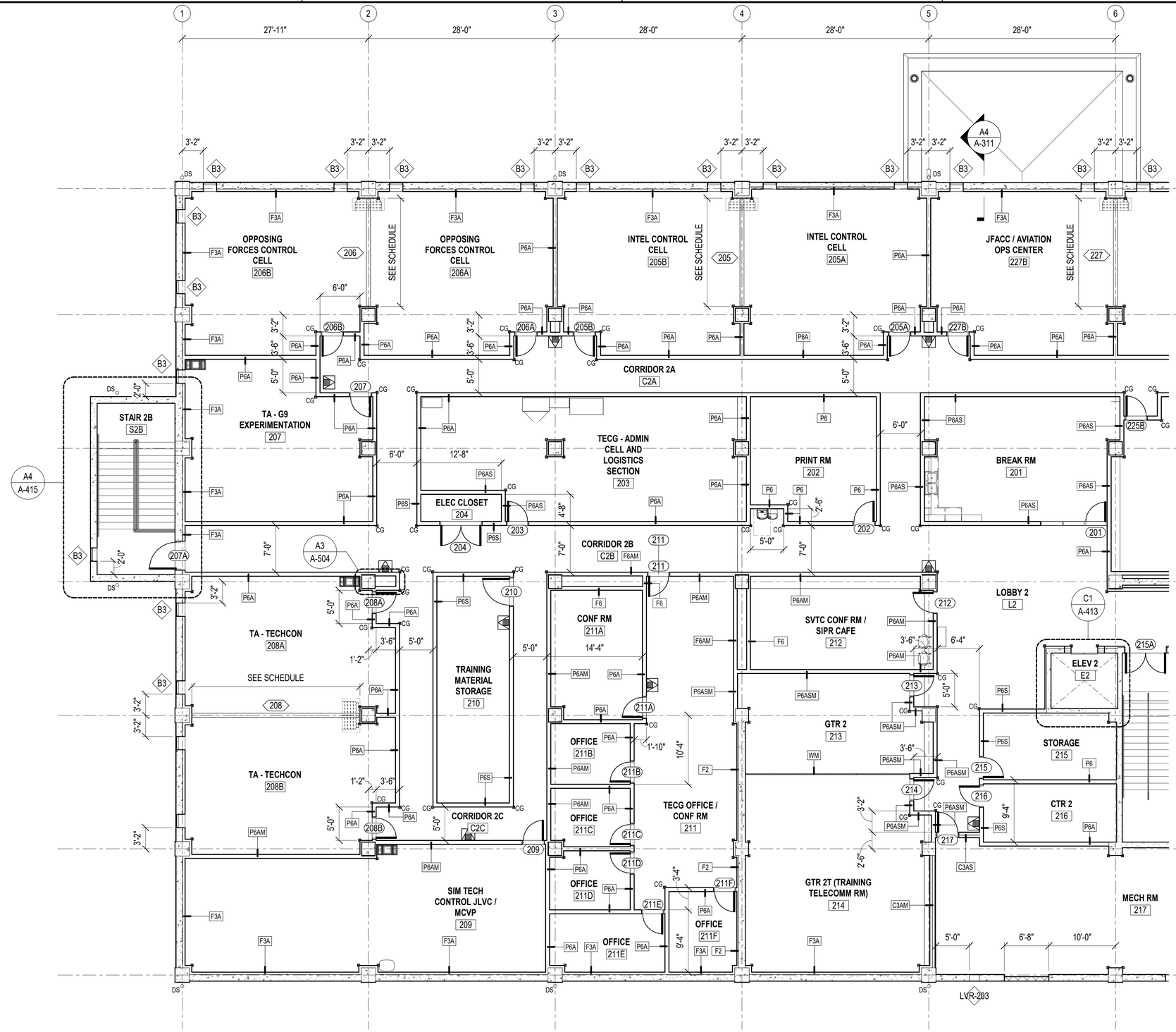

A1 ENLARGED FLOOR PLAN - 2A

SCALE: 1/8" = 1'-0" (A-104)

GENERAL SHEET NOTES

1. REFER TO SHEET A-502 FOR PARTITION TYPES.
2. REFET TO SHEET A-750 FOR DOWNSPOUT DETAILS.
3. REFER TO SHEET A-730 FOR CORNER GUARD, FIRE EXTINGUISHER CABINETS, RAISED ACCESS FLOORING, AND FLOOR DRAIN DETAILS.

FLOOR PLAN LEGEND

SYMBOL	DESCRIPTION
	CONC WALL
	PARTITION OR FURRED WALL
X	GRIDLINE
CG	CORNER GUARD
	RECESSED ENTRY FLOOR MAT
ROOMNAME 101	ROOM NAME AND NUMBER
101	DOOR NUMBER SYMBOL
A1 A-101	SECTION/ELEVATION
P1	PARTITION TYPE
A1 A-101 SIM	DETAIL REFERENCE
A	WINDOW SYMBOL
DS	DOWNSPOUT
FD	FLOOR DRAIN, SEE PLUMBING
FEC	FIRE EXTINGUISHER CABINET
KB	KNOX BOX
101	OPERABLE PARTITION TAG

KEY PLAN

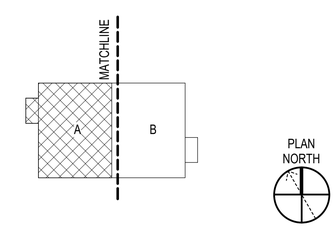

GRAPHIC SCALE(S)

1/8" = 1' - 0" 0 5' 10' 15' 30'

SYM	DESCRIPTION	DATE	APPR

NAVFAC

MYLES M. MICHIBATA LICENSED PROFESSIONAL ARCHITECT No. 12367 HAWAII, U.S.A.
LIC. EXP 04/30/26

ASMD LLC. A/E INFO

APPROVED
FOR COMMANDER NAVFAC

ACTIVITY: NATHANIEL PYRON, MILCON PLANNER, DPPH
SATISFACTORY TO DATE: 3/10/2026
DES: JG / RLB DRW: RLB CHK: JG
PM/DM: DKS/DMK
BRANCH MANAGER: KYM
CHIEF ENG/ARCH: KYM
FIRE PROTECTION: RYO

DEPARTMENT OF THE NAVY
NAVFAC PACIFIC
NAVAL FACILITIES ENGINEERING SYSTEMS COMMAND ~ PACIFIC
MAKALAPA, HAWAII
U.S. NAVSUPPACT
MCB CAMP BLAZ, GUAM
JFY 2022 PROJECT J-875
BATTLE STAFF TRAINING FACILITY
ENLARGED FLOOR PLAN - 2A

SCALE: AS NOTED
EPROJECT NO.: 1696746
CONSTR. CONTR. NO.
NAVFAC DRAWING NO. 17321916
SHEET 120 OF 468

A-105

DRAWFORM REVISION: 25 AUGUST 2020

3/12/2026 9:11:59 PM A-105
C:\Users\rbillamona\Documents\BLDG-875-1696746-A_rbaintonaFALVN.rvt

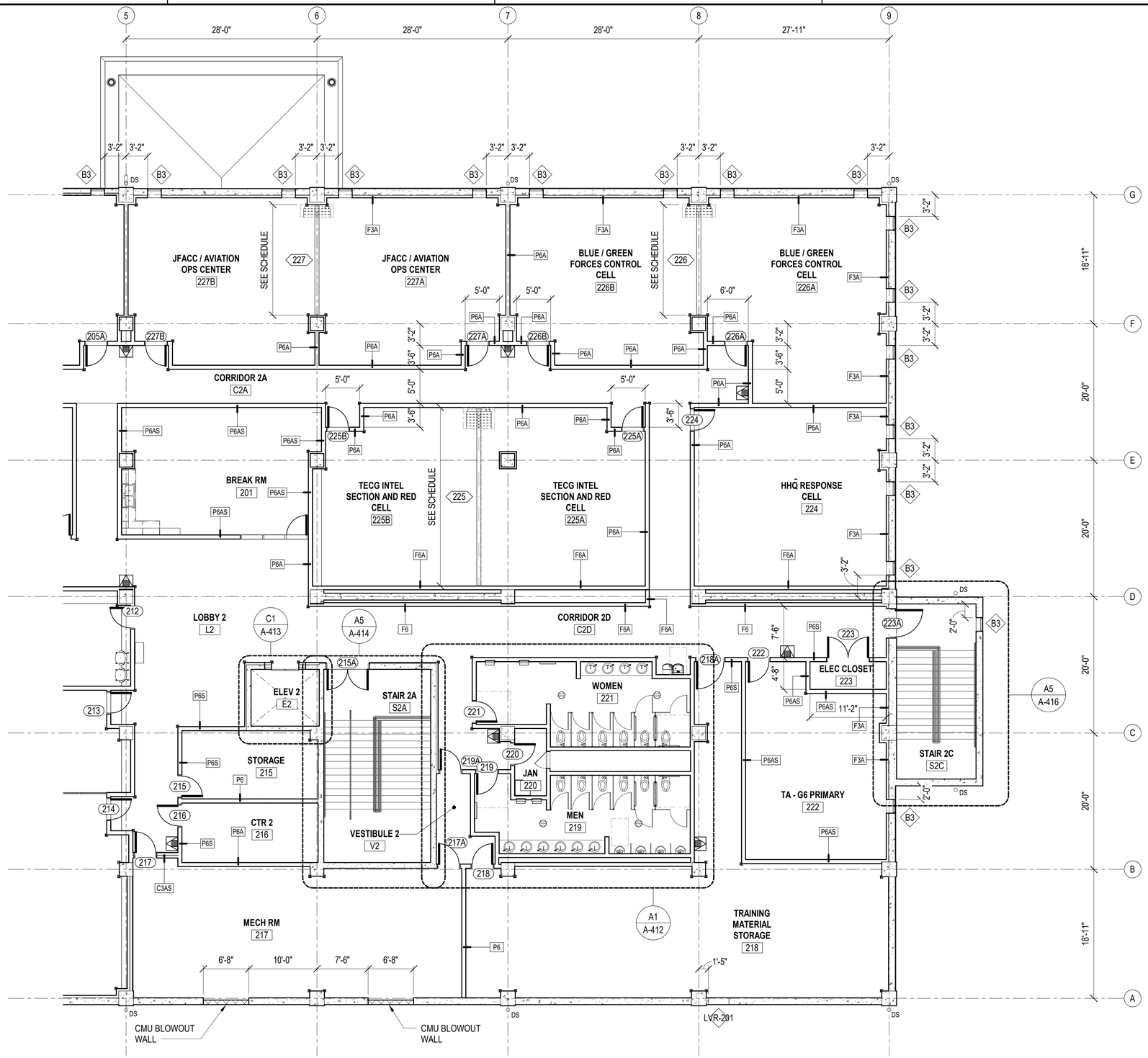

A1 ENLARGED FLOOR PLAN - 2B

SCALE: 1/8" = 1'-0" (A-104)

GENERAL SHEET NOTES

1. REFER TO SHEET A-502 FOR PARTITION TYPES.
2. REFET TO SHEET A-750 FOR DOWNSPOUT DETAILS.
3. REFER TO SHEET A-730 FOR CORNER GUARD, FIRE EXTINGUISHER CABINETS, RAISED ACCESS FLOORING, AND FLOOR DRAIN DETAILS.

FLOOR PLAN LEGEND

SYMBOL	DESCRIPTION
	CONC WALL
	PARTITION OR FURRED WALL
X	GRIDLINE
CG	CORNER GUARD
	RECESSED ENTRY FLOOR MAT
ROOMNAME 101	ROOM NAME AND NUMBER
101	DOOR NUMBER SYMBOL
A1 A-101	SECTION/ELEVATION
P1	PARTITION TYPE
A1 A-101 SIM	DETAIL REFERENCE
A	WINDOW SYMBOL
DS	DOWNSPOUT
FD	FLOOR DRAIN, SEE PLUMBING
FEC	FIRE EXTINGUISHER CABINET
KB	KNOX BOX
101	OPERABLE PARTITION TAG

KEY PLAN

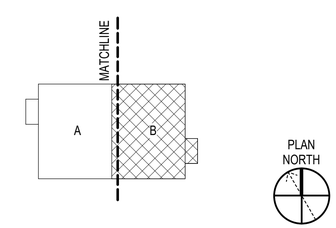

GRAPHIC SCALE(S)

1/8" = 1' - 0" 0 5' 10' 15' 30'

SYM	DESCRIPTION	DATE	APPR

NAVFAC

MYLES M. MICHIBATA LICENSED PROFESSIONAL ARCHITECT No. 12367 HAWAII, U.S.A.
LIC. EXP 04/30/26 SEAL

ASMD LLC. A/E INFO

APPROVED Evan Miyazaki
FOR COMMANDER NAVFAC

ACTIVITY: NATHANIEL PYRON, MILCON PLANNER, DPPH
SATISFACTORY TO DATE 3/10/2026
DES JG / RLB DRW RLB CHK JG
PM/DM DKS/DMK
BRANCH MANAGER KYM
CHIEF ENG/ARCH KYM
FIRE PROTECTION RYO

DEPARTMENT OF THE NAVY
NAVAL FACILITIES ENGINEERING SYSTEMS COMMAND ~ PACIFIC
NAVFAC PACIFIC
U.S. NAVSUPPACT
NAVAL FACILITIES ENGINEERING SYSTEMS COMMAND
MAKALAPA, HAWAII
MCB CAMP BLAZ, GUAM

JFY 2022 PROJECT J-875
BATTLE STAFF TRAINING FACILITY
ENLARGED FLOOR PLAN - 2B

SCALE: AS NOTED
EPROJECT NO.: 1696746
CONSTR. CONTR. NO.
NAVFAC DRAWING NO. 17321917
SHEET 121 OF 468
A-106

DRAWFORM REVISION: 25 AUGUST 2020

3/12/2026 9:12:01 PM A-106
C:\Users\rlbatterson\Documents\BLDG-8975-1696746-A_rlbatterson-FaLVN.rvt

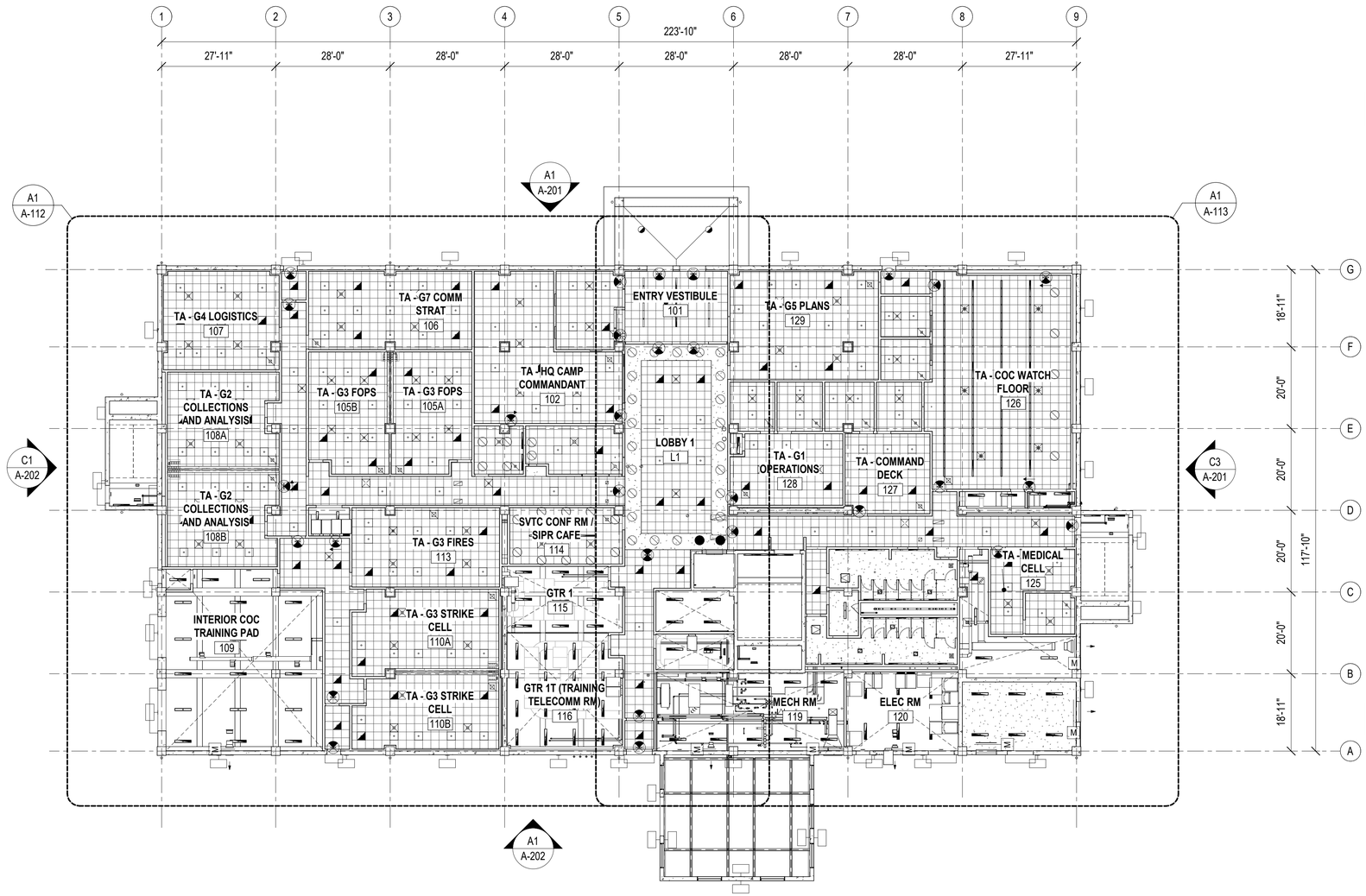

A1 OVERALL FIRST FLOOR REFLECTED CEILING PLAN

SCALE: 1/16" = 1'-0"

GENERAL SHEET NOTES

REFLECTED CEILING PLAN LEGEND

SYMBOL	DESCRIPTION
	NO CEILING - EXPOSED TO STRUCTURE
	2' - 0" X 2' - 0" ACOUSTICAL CEILING TILE
	GYPSUM BOARD CEILING
X'-X" A.F.F.	FINISHED CEILING HEIGHT ABOVE FINISHED FLOOR
	LIGHT FIXTURE, REFER TO ELECTRICAL DRAWINGS
	EXIT SIGN, REFER TO ELECTRICAL DRAWINGS
	RETURN DIFFUSER, REFER TO MECHANICAL DRAWINGS
	SUPPLY DIFFUSER, REFER TO MECHANICAL DRAWINGS.
	EXHAUST GRILLE, REFER TO MECHANICAL DRAWINGS

KEY PLAN

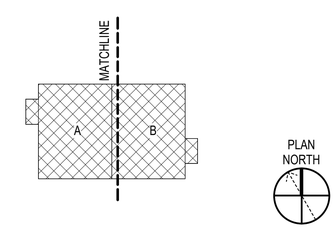

GRAPHIC SCALE(S)

1/16" = 1' - 0" 0 5' 10' 20' 30' 60'

SYM	DESCRIPTION	DATE	APPR

NAVFAC

MYLES M. MICHIBATA LICENSED PROFESSIONAL ARCHITECT No. 12367 HAWAII, U.S.A.
LIC. EXP 04/30/26 SEAL

ASMD LLC. A/E INFO

APPROVED Evan Minjarez
FOR COMMANDER NAVFAC
ACTIVITY
NATHANIEL PYRON, MILCON PLANNER, DPPH
SATISFACTORY TO DATE 3/10/2026

DES	JG / RLB	DRW RLB	CHK JG
PMDM			DKS/DMK
BRANCH MANAGER			KYM
CHIEF ENG/ARCH			KYM
FIRE PROTECTION			RYO

DEPARTMENT OF THE NAVY
NAVFAC PACIFIC
NAVAL FACILITIES ENGINEERING SYSTEMS COMMAND ~ PACIFIC
NAVAL FACILITIES ENGINEERING SYSTEMS COMMAND
MAKALAPA, HAWAII
U.S. NAVSUPPACT
MCB CAMP BLAZ, GUAM
JFY 2022 PROJECT J-875
BATTLE STAFF TRAINING FACILITY
OVERALL FIRST FLOOR REFLECTED CEILING PLAN

SCALE: AS NOTED
EPROJECT NO.: 1696746
CONSTR. CONTR. NO.
NAVFAC DRAWING NO. 17321918
SHEET 122 OF 468
A-111

DRAWFORM REVISION: 25 AUGUST 2020

3/12/2026 9:12:04 PM A-111
C:\Users\rlbatterton\Documents\BLDG-875-1696746-A_rbatterton-FALVN.rvt

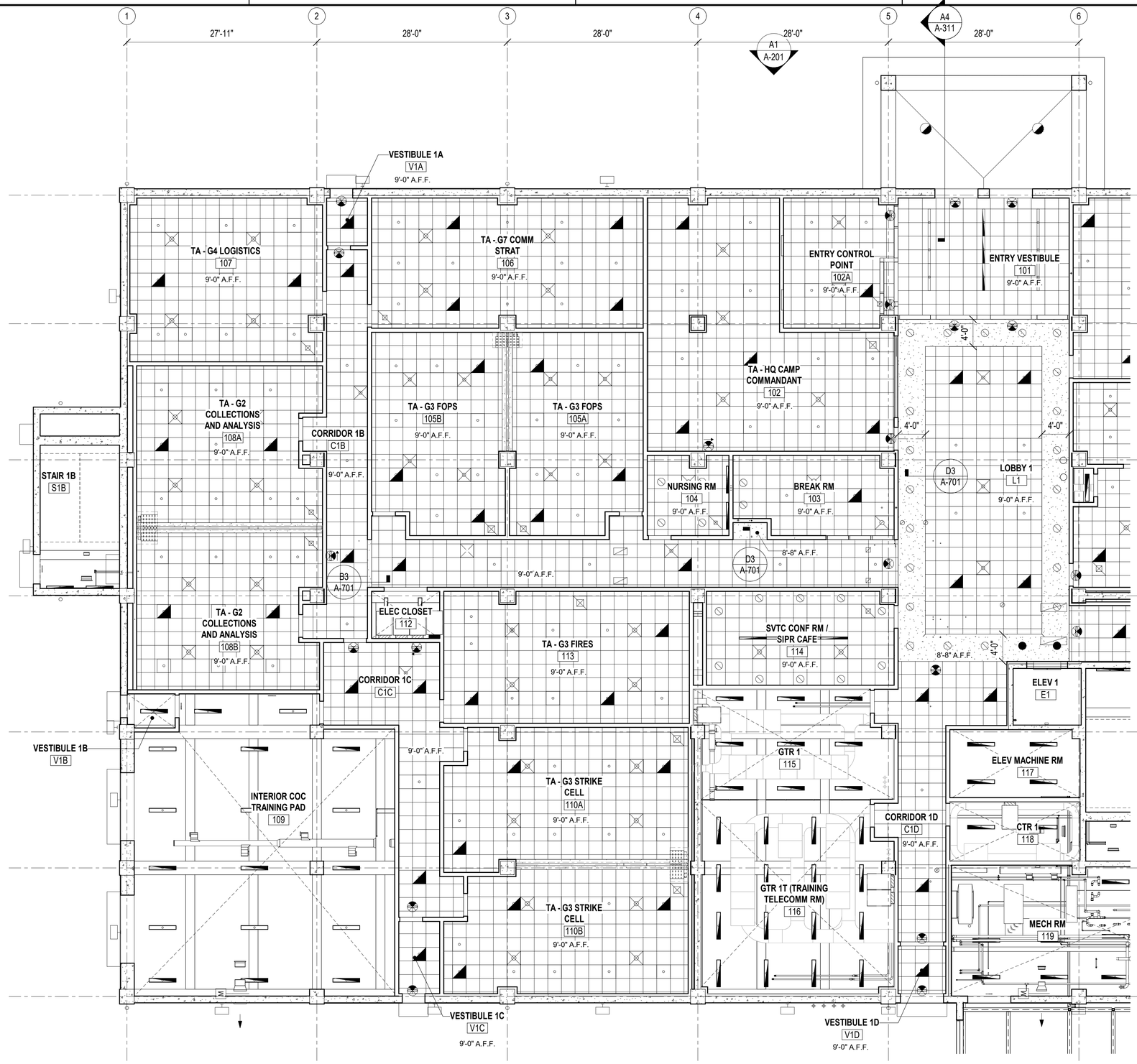

A1 ENLARGED REFLECTED CEILING PLAN - 1A

SCALE: 1/8" = 1'-0" (A-111)

GENERAL SHEET NOTES

REFLECTED CEILING PLAN LEGEND

SYMBOL	DESCRIPTION
	NO CEILING - EXPOSED TO STRUCTURE
	2' - 0" X 2' - 0" ACOUSTICAL CEILING TILE
	GYPSUM BOARD CEILING
X'-X" A.F.F.	FINISHED CEILING HEIGHT ABOVE FINISHED FLOOR
	LIGHT FIXTURE, REFER TO ELECTRICAL DRAWINGS
	EXIT SIGN, REFER TO ELECTRICAL DRAWINGS
	RETURN DIFFUSER, REFER TO MECHANICAL DRAWINGS
	SUPPLY DIFFUSER, REFER TO MECHANICAL DRAWINGS.
	EXHAUST GRILLE, REFER TO MECHANICAL DRAWINGS

KEY PLAN

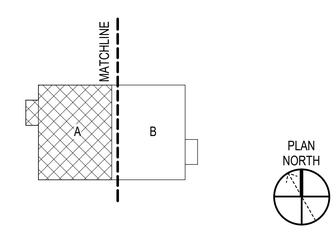

GRAPHIC SCALE(S)

1/8" = 1' - 0" 0 5' 10' 15' 30'

SYM	DESCRIPTION	DATE	APPR

NAVFAC

MYLES M. MICHIBATA LICENSED PROFESSIONAL ARCHITECT No. 12367 HAWAII, U.S.A.
LIC. EXP 04/30/26 SEAL

ASMD LLC. A/E INFO

APPROVED Evan Miyazal FOR COMMANDER NAVFAC ACTIVITY

NATHANIEL PYRON, MILCON PLANNER, DPPH

SATISFACTORY TO DATE 3/10/2026

DES	JG / RLB	DRW RLB	CHK JG
PM/DM			DKS/DMK
BRANCH MANAGER			KYM
CHIEF ENG/ARCH			KYM
FIRE PROTECTION			RYO

DEPARTMENT OF THE NAVY
NAVAL FACILITIES ENGINEERING SYSTEMS COMMAND
NAVFAC PACIFIC
U.S. NAVSUPPACT

NAVAL FACILITIES ENGINEERING SYSTEMS COMMAND ~ PACIFIC
MAKALAPA, HAWAII

MCB CAMP BLAZ, GUAM

JFY 2022 PROJECT J-875
BATTLE STAFF TRAINING FACILITY

ENLARGED REFLECTED CEILING PLAN - 1A

SCALE: AS NOTED
EPROJECT NO.: 1696746
CONSTR. CONTR. NO.
NAVFAC DRAWING NO. 17321919
SHEET 123 OF 468

A-112

DRAWFORM REVISION: 25 AUGUST 2020

3/12/2026 9:12:06 PM A-112
C:\Users\rbellamona\Documents\BLDG-875-1696746-A_rbellamonaFALVN.rvt

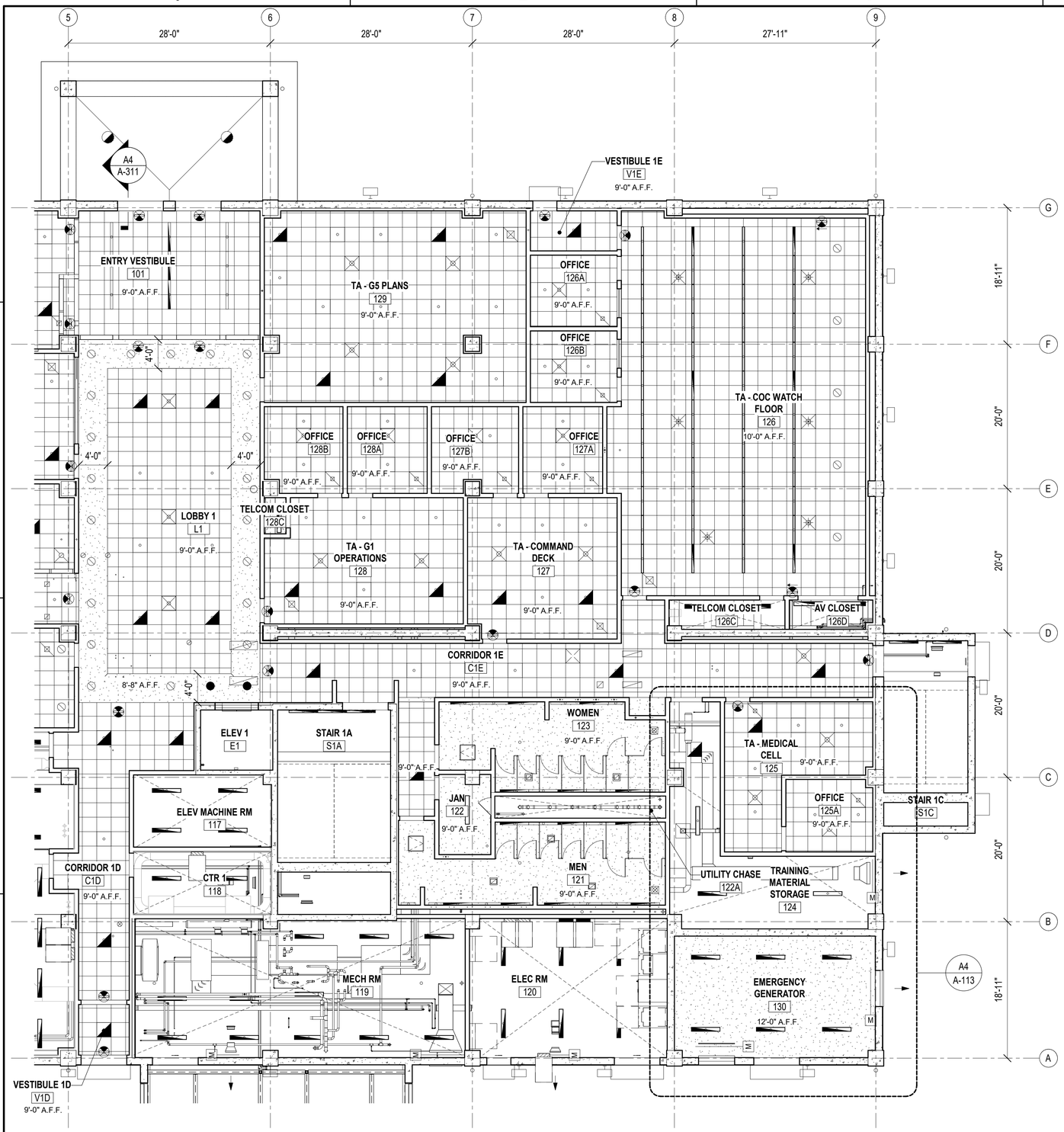

A1 ENLARGED REFLECTED CEILING PLAN - 1B

SCALE: 1/8" = 1'-0" (A-111)

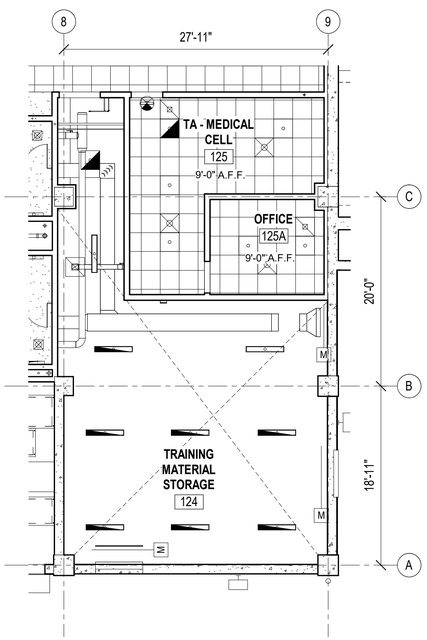

A4 OPTION ITEM #2

SCALE: 1/8" = 1'-0" (A-113)

GENERAL SHEET NOTES

REFLECTED CEILING PLAN LEGEND

SYMBOL	DESCRIPTION
	NO CEILING - EXPOSED TO STRUCTURE
	2' - 0" X 2' - 0" ACOUSTICAL CEILING TILE
	GYPSUM BOARD CEILING
X'-X" A.F.F.	FINISHED CEILING HEIGHT ABOVE FINISHED FLOOR
	LIGHT FIXTURE, REFER TO ELECTRICAL DRAWINGS
	EXIT SIGN, REFER TO ELECTRICAL DRAWINGS
	RETURN DIFFUSER, REFER TO MECHANICAL DRAWINGS
	SUPPLY DIFFUSER, REFER TO MECHANICAL DRAWINGS.
	EXHAUST GRILLE, REFER TO MECHANICAL DRAWINGS

KEY PLAN

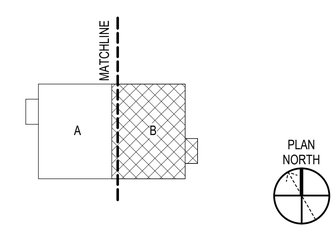

GRAPHIC SCALE(S)

1/8" = 1' - 0" 0 5' 10' 15' 30'

SYM	DESCRIPTION	DATE	APPR

NAVFAC

MYLES M. MICHIBATA LICENSED PROFESSIONAL ARCHITECT No. 12367 HAWAII, U.S.A.
LIC. EXP 04/30/26 SEAL

ASMD LLC. A/E INFO

APPROVED Evan Moore
FOR COMMANDER NAVFAC

ACTIVITY
NATHANIEL PYRON, MILCON PLANNER, DPPH

SATISFACTORY TO DATE 3/10/2026

DES JG / RLB	DRW RLB	CHK JG	
PM/DM	DKS/DMK		
BRANCH MANAGER	KYM		
CHIEF ENG/ARCH	KYM		
FIRE PROTECTION	RYO		

DEPARTMENT OF THE NAVY
NAVAL FACILITIES ENGINEERING SYSTEMS COMMAND ~ PACIFIC
NAVFAC PACIFIC
U.S. NAVSUPPACT

NAVAL FACILITIES ENGINEERING SYSTEMS COMMAND ~ PACIFIC
MAKALAPA, HAWAII
MCB CAMP BLAZ, GUAM

JFY 2022 PROJECT J-875
BATTLE STAFF TRAINING FACILITY

ENLARGED REFLECTED CEILING PLAN - 1B & OPTION ITEM #2

SCALE: AS NOTED
EPROJECT NO.: 1696746
CONSTR. CONTR. NO.
NAVFAC DRAWING NO. 17321920
SHEET 124 OF 468

A-113

DRAWFORM REVISION: 25 AUGUST 2020

3/12/2026 9:12:08 PM A-113
C:\Users\rlbellona\Documents\BLDG-875-1696746-A_rlbellonaF4LVN.rvt

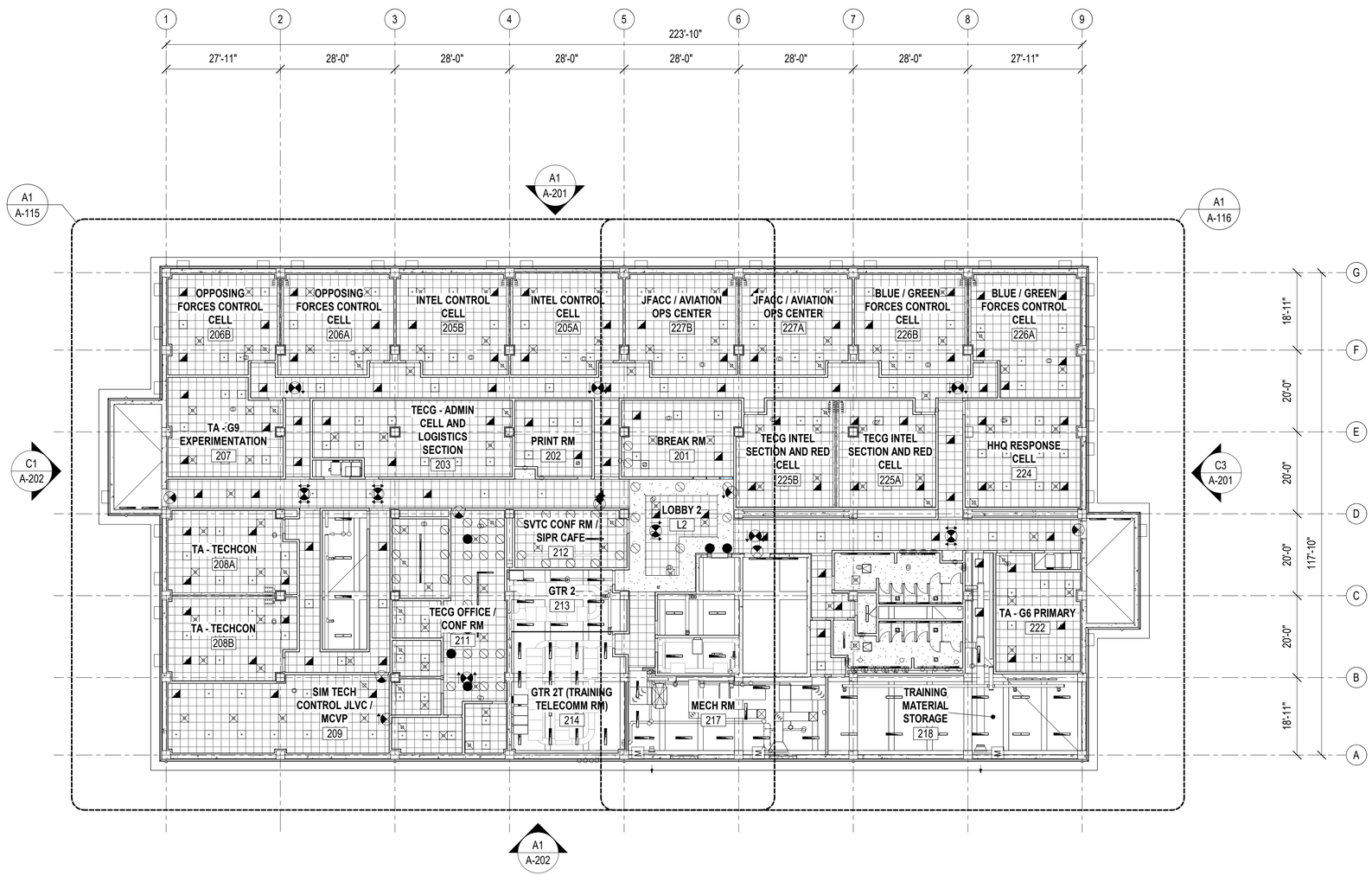

A1 OVERALL SECOND FLOOR REFLECTED CEILING PLAN

SCALE: 1/16" = 1'-0"

GENERAL SHEET NOTES

SYM	DESCRIPTION	DATE	APPR

REFLECTED CEILING PLAN LEGEND

SYMBOL	DESCRIPTION
	NO CEILING - EXPOSED TO STRUCTURE
	2' - 0" X 2' - 0" ACOUSTICAL CEILING TILE
	GYPSUM BOARD CEILING
X'-X" A.F.F.	FINISHED CEILING HEIGHT ABOVE FINISHED FLOOR
	LIGHT FIXTURE, REFER TO ELECTRICAL DRAWINGS
	EXIT SIGN, REFER TO ELECTRICAL DRAWINGS
	RETURN DIFFUSER, REFER TO MECHANICAL DRAWINGS
	SUPPLY DIFFUSER, REFER TO MECHANICAL DRAWINGS.
	EXHAUST GRILLE, REFER TO MECHANICAL DRAWINGS

KEY PLAN

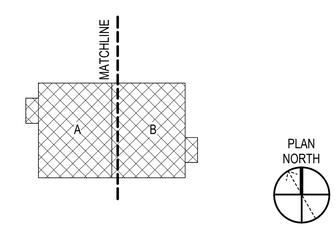

GRAPHIC SCALE(S)

1/16" = 1' - 0" 0 5' 10' 20' 30' 60'

NAVFAC

MYLES M. MICHIBATA
LICENSED PROFESSIONAL ARCHITECT
No. 12367
HAWAII, U.S.A.
LIC. EXP 04/30/26 SEAL

ASMD LLC.
A/E INFO

APPROVED
Evan Moore
FOR COMMANDER NAVFAC

ACTIVITY
NATHANIEL PYRON, MILCON PLANNER, DPPH
SATISFACTORY TO DATE 3/10/2026

DES JG / RLB	DRW RLB	CHK JG	
PM/DM	DKS/DMK		
BRANCH MANAGER	KYM		
CHIEF ENG/ARCH	KYM		
FIRE PROTECTION	RYO		

DEPARTMENT OF THE NAVY
NAVFAC PACIFIC
U.S. NAVSUPPACT

NAVAL FACILITIES ENGINEERING SYSTEMS COMMAND
NAVAL FACILITIES ENGINEERING SYSTEMS COMMAND – PACIFIC
MAKALAPA, HAWAII

MCB CAMP BLAZ, GUAM

JFY 2022 PROJECT J-875
BATTLE STAFF TRAINING FACILITY

OVERALL SECOND FLOOR REFLECTED CEILING PLAN

SCALE: AS NOTED
EPROJECT NO.: 1696746
CONSTR. CONTR. NO.

NAVFAC DRAWING NO.
17321921

SHEET 125 OF 468

A-114

DRAWFORM REVISION: 25 AUGUST 2020

A-114
3/12/2026 9:12:10 PM
C:\Users\Bailmonst\Documents\BLDG-3875-1696746-A_rbailmonstF4LVN.rvt

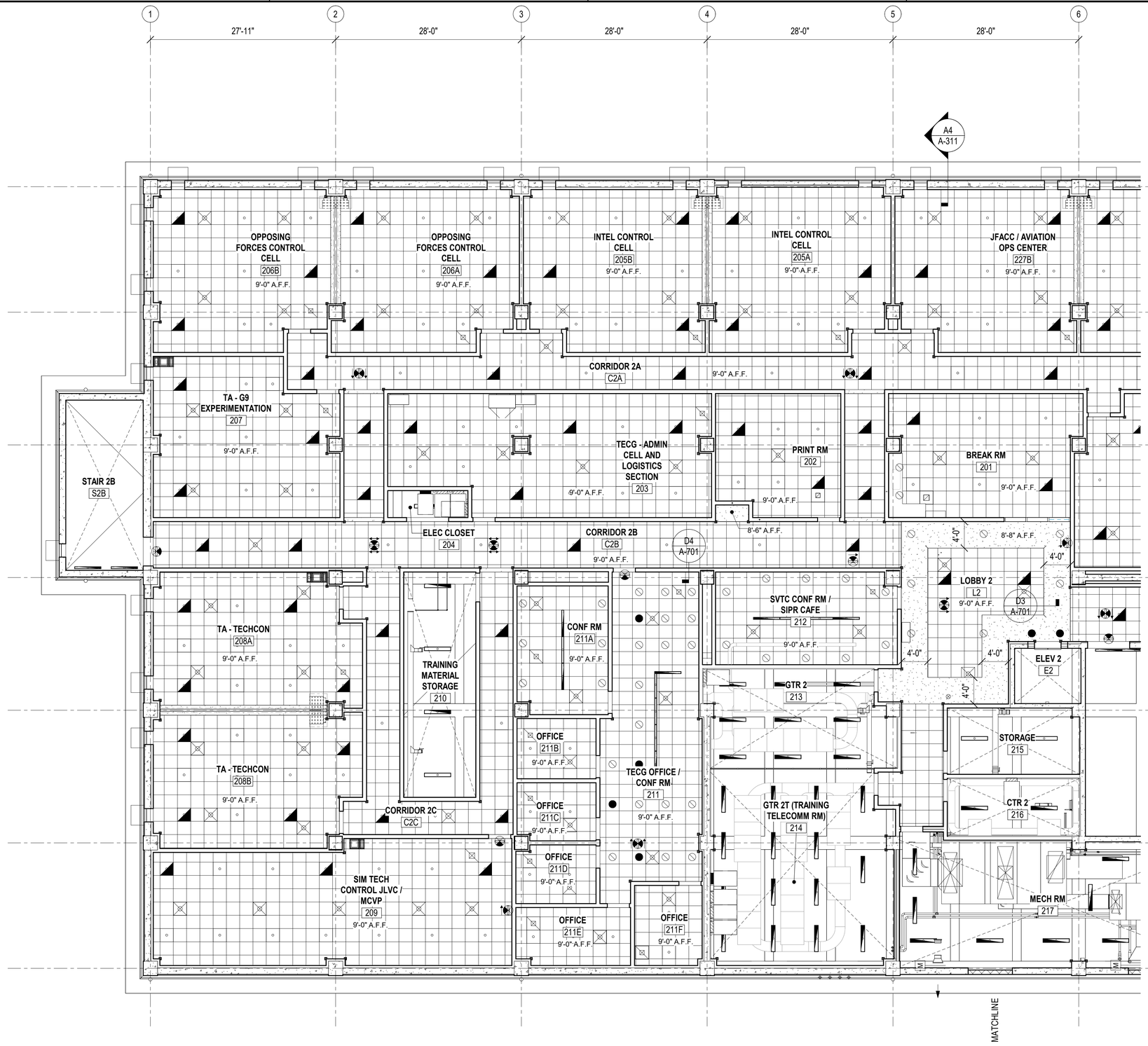

A1 ENLARGED REFLECTED CEILING PLAN - 2A

SCALE: 1/8" = 1'-0" (A-114)

GENERAL SHEET NOTES

REFLECTED CEILING PLAN LEGEND

SYMBOL	DESCRIPTION
	NO CEILING - EXPOSED TO STRUCTURE
	2' - 0" X 2' - 0" ACOUSTICAL CEILING TILE
	GYPSUM BOARD CEILING
X'-X" A.F.F.	FINISHED CEILING HEIGHT ABOVE FINISHED FLOOR
	LIGHT FIXTURE, REFER TO ELECTRICAL DRAWINGS
	EXIT SIGN, REFER TO ELECTRICAL DRAWINGS
	RETURN DIFFUSER, REFER TO MECHANICAL DRAWINGS
	SUPPLY DIFFUSER, REFER TO MECHANICAL DRAWINGS.
	EXHAUST GRILLE, REFER TO MECHANICAL DRAWINGS

KEY PLAN

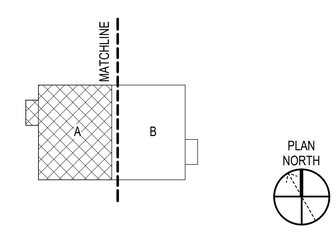

GRAPHIC SCALE(S)

1/8" = 1' - 0" 0 5' 10' 15' 30'

SYM	DESCRIPTION	DATE	APPR

NAVFAC

MYLES M. MICHIBATA LICENSED PROFESSIONAL ARCHITECT No. 12367 HAWAII, U.S.A.
LIC. EXP 04/30/26

ASMD LLC.

APPROVED
FOR COMMANDER NAVFAC
ACTIVITY
NATHANIEL PYRON, MILCON PLANNER, DPPH
SATISFACTORY TO DATE 3/10/2026
DES JG / RLB DRW RLB CHK JG
PM/DM DKS/DMK
BRANCH MANAGER KYM
CHIEF ENG/ARCH KYM
FIRE PROTECTION RYO

NAVAL FACILITIES ENGINEERING SYSTEMS COMMAND
DEPARTMENT OF THE NAVY
NAVAL FACILITIES ENGINEERING SYSTEMS COMMAND – PACIFIC
MAKALAPA, HAWAII
NAVFAC PACIFIC
U.S. NAVSUPPACT
MCB CAMP BLAZ, GUAM
JFY 2022 PROJECT J-875
BATTLE STAFF TRAINING FACILITY
ENLARGED REFLECTED CEILING PLAN - 2A

SCALE: AS NOTED
EPROJECT NO.: 1696746
CONSTR. CONTR. NO.
NAVFAC DRAWING NO. 17321922
SHEET 126 OF 468
A-115

DRAWFORM REVISION: 25 AUGUST 2020

A-115
3/12/2026 9:12:12 PM
C:\Users\BeamonaI\Documents\BLDG-3875-1696746-A_rbaintionsFr4LVN.rvt

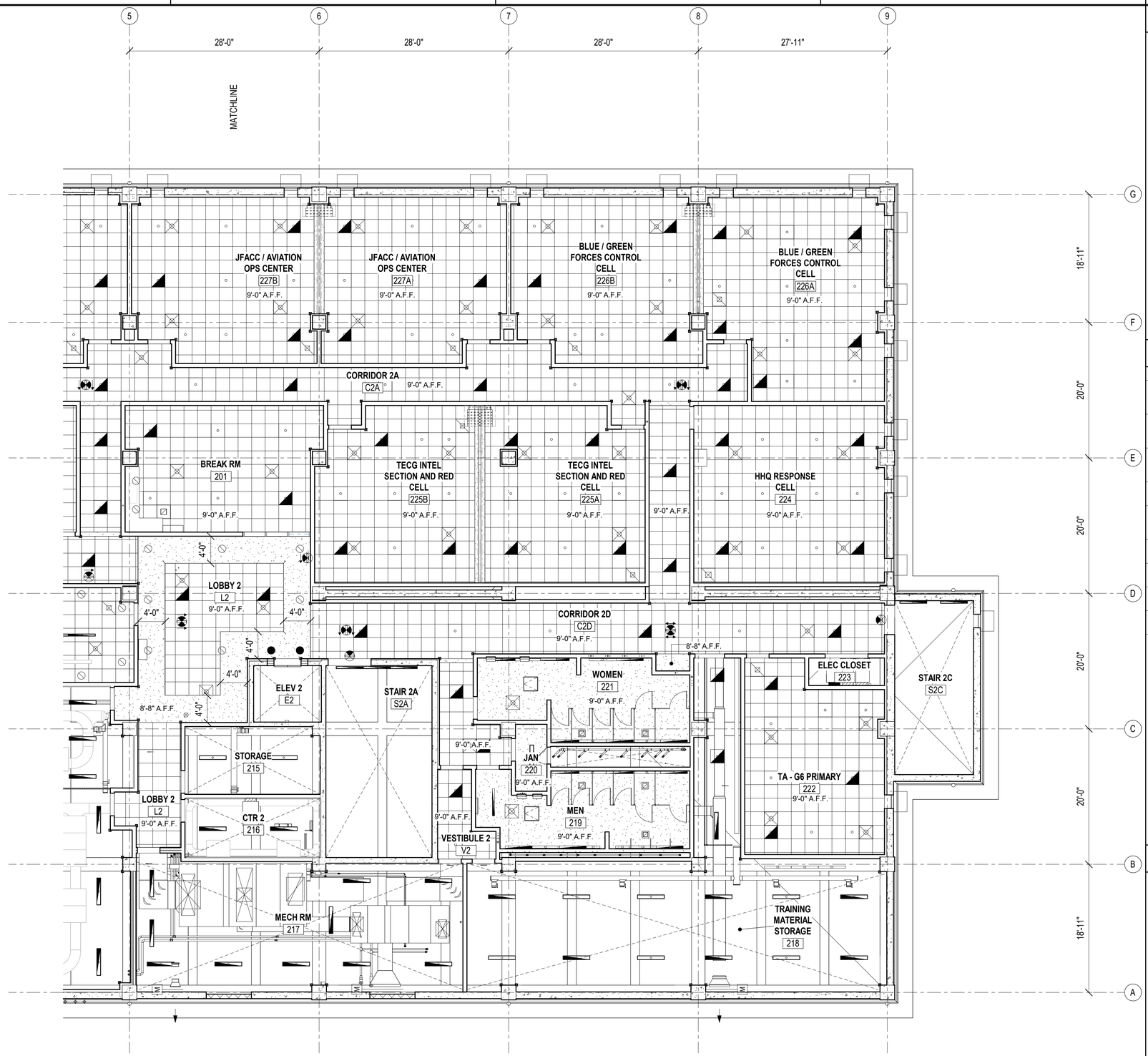

A1 ENLARGED REFLECTED CEILING PLAN - 2B

SCALE: 1/8" = 1'-0" (A-114)

GENERAL SHEET NOTES

REFLECTED CEILING PLAN LEGEND

SYMBOL	DESCRIPTION
	NO CEILING - EXPOSED TO STRUCTURE
	2' - 0" X 2' - 0" ACOUSTICAL CEILING TILE
	GYPSUM BOARD CEILING
X'-X" A.F.F.	FINISHED CEILING HEIGHT ABOVE FINISHED FLOOR
	LIGHT FIXTURE, REFER TO ELECTRICAL DRAWINGS
	EXIT SIGN, REFER TO ELECTRICAL DRAWINGS
	RETURN DIFFUSER, REFER TO MECHANICAL DRAWINGS
	SUPPLY DIFFUSER, REFER TO MECHANICAL DRAWINGS.
	EXHAUST GRILLE, REFER TO MECHANICAL DRAWINGS

KEY PLAN

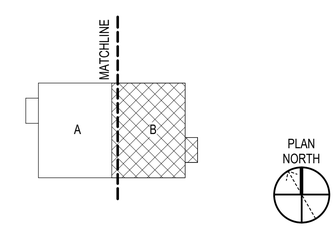

GRAPHIC SCALE(S)

1/8" = 1' - 0" 0 5' 10' 15' 30'

SYM	DESCRIPTION	DATE	APPR

NAVFAC

MYLES M. MICHIBATA LICENSED PROFESSIONAL ARCHITECT No. 12367 HAWAII, U.S.A.
LIC. EXP 04/30/26 SEAL

ASMD LLC. A/E INFO

APPROVED Evan Mizel
FOR COMMANDER NAVFAC

ACTIVITY
NATHANIEL PYRON, MILCON PLANNER, DPPH

SATISFACTORY TO DATE 3/10/2026
DES JG / RLB DRW RLB CHK JG
PM/DM DKS/DMK
BRANCH MANAGER KYM
CHIEF ENG/ARCH KYM
FIRE PROTECTION RYO

DEPARTMENT OF THE NAVY
NAVFAC PACIFIC
U.S. NAVSUPPACT
NAVAL FACILITIES ENGINEERING SYSTEMS COMMAND ~ PACIFIC
NAVAL FACILITIES ENGINEERING SYSTEMS COMMAND
MAKALAPA, HAWAII
MCB CAMP BLAZ, GUAM
JFY 2022 PROJECT J-875
BATTLE STAFF TRAINING FACILITY
ENLARGED REFLECTED CEILING PLAN - 2B

SCALE: AS NOTED
EPROJECT NO.: 1696746
CONSTR. CONTR. NO.

NAVFAC DRAWING NO.
17321923

SHEET 127 OF 468
A-116

DRAWFORM REVISION: 25 AUGUST 2020

A-116
3/12/2026 9:12:13 PM
C:\Users\rlbellmond\Documents\BLDG-3875-1696746-A_rbalintonsnF4LVN.rvt

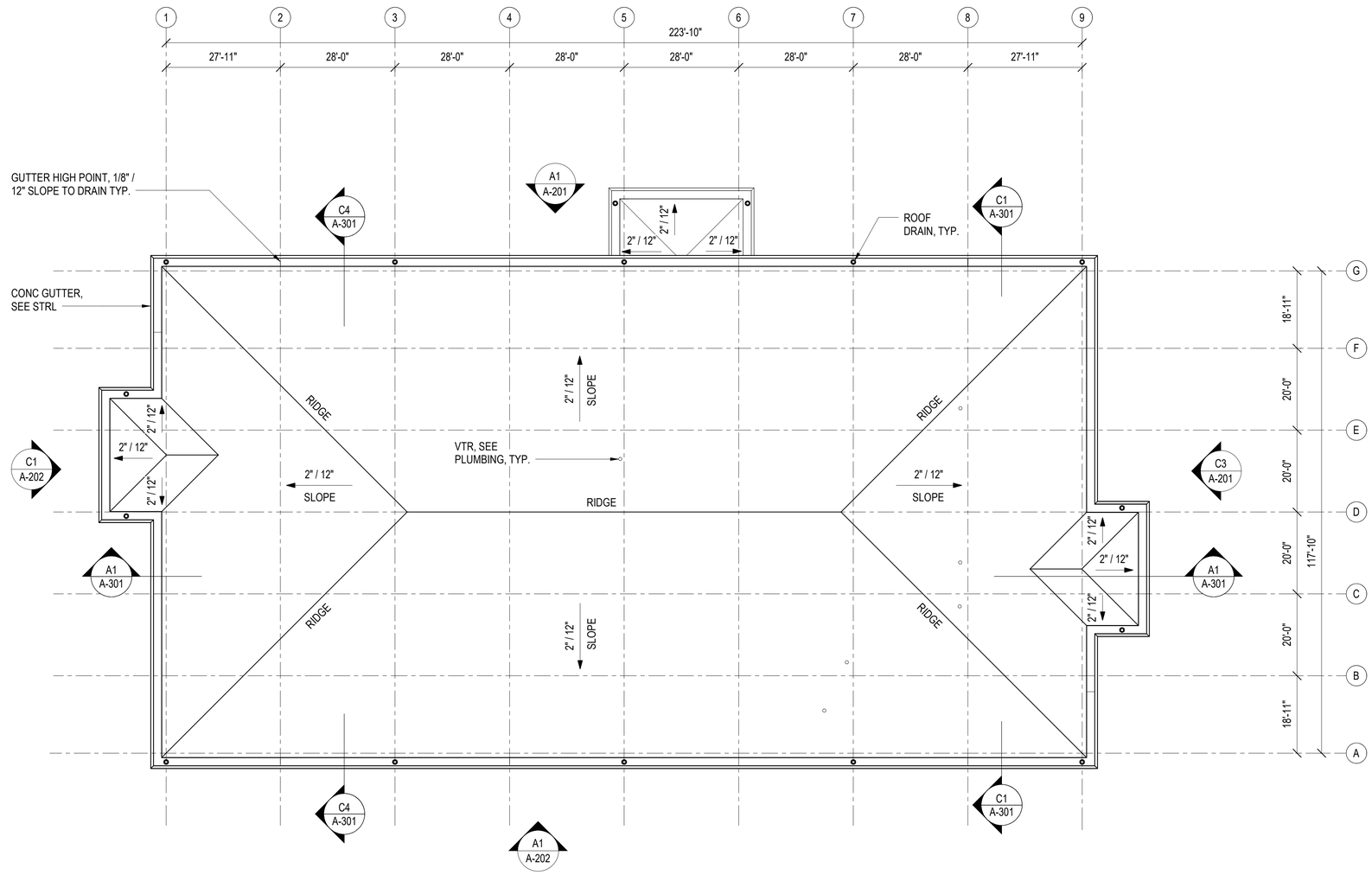

A1 ROOF PLAN

SCALE: 1/16" = 1'-0"

GENERAL SHEET NOTES

SYM	DESCRIPTION	DATE	APPR

KEY PLAN

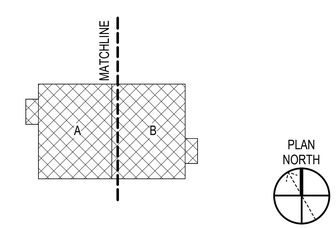

GRAPHIC SCALE(S)

1/16" = 1' - 0" 0 5' 10' 20' 30' 60'

NAVFAC

MYLES M. MICHIBATA LICENSED PROFESSIONAL ARCHITECT No. 12367 HAWAII, U.S.A.
LIC. EXP 04/30/26

ASMD LLC.
A/E INFO

APPROVED
Evan Mizell
FOR COMMANDER NAVFAC

ACTIVITY
NATHANIEL PYRON, MILCON PLANNER, DPPH
SATISFACTORY TO DATE 3/10/2026

DES JG / RLB	DRW RLB	CHK JG	
PM/DM		DKS/DMK	
BRANCH MANAGER		KYM	
CHIEF ENG/ARCH		KYM	
FIRE PROTECTION		RYO	

DEPARTMENT OF THE NAVY
NAVFAC PACIFIC
U.S. NAVSUPPACT

NAVAL FACILITIES ENGINEERING SYSTEMS COMMAND
NAVAL FACILITIES ENGINEERING SYSTEMS COMMAND ~ PACIFIC
MAKALAPA, HAWAII

MCB CAMP BLAZ, GUAM

JFY 2022 PROJECT J-875
BATTLE STAFF TRAINING FACILITY

ROOF PLAN

SCALE: AS NOTED
EPROJECT NO.: 1696746
CONSTR. CONTR. NO.
NAVFAC DRAWING NO. 17321924
SHEET 128 OF 468

A-120

DRAWFORM REVISION: 25 AUGUST 2020

3/12/2026 9:12:14 PM A-120
C:\Users\rtbaritona\Documents\BLDG-875-1696746-A_rtbaritonaF4LVN.rvt

GENERAL SHEET NOTES

1. REFER TO SHEET A-611 FOR EXTERIOR COLOR AND MATERIAL SCHEDULE.
2. FLUID-APPLIED AIR BARRIER MEMBRANE IS TO BE APPLIED BEFORE THE EXTERIOR FINISH SYSTEMS.

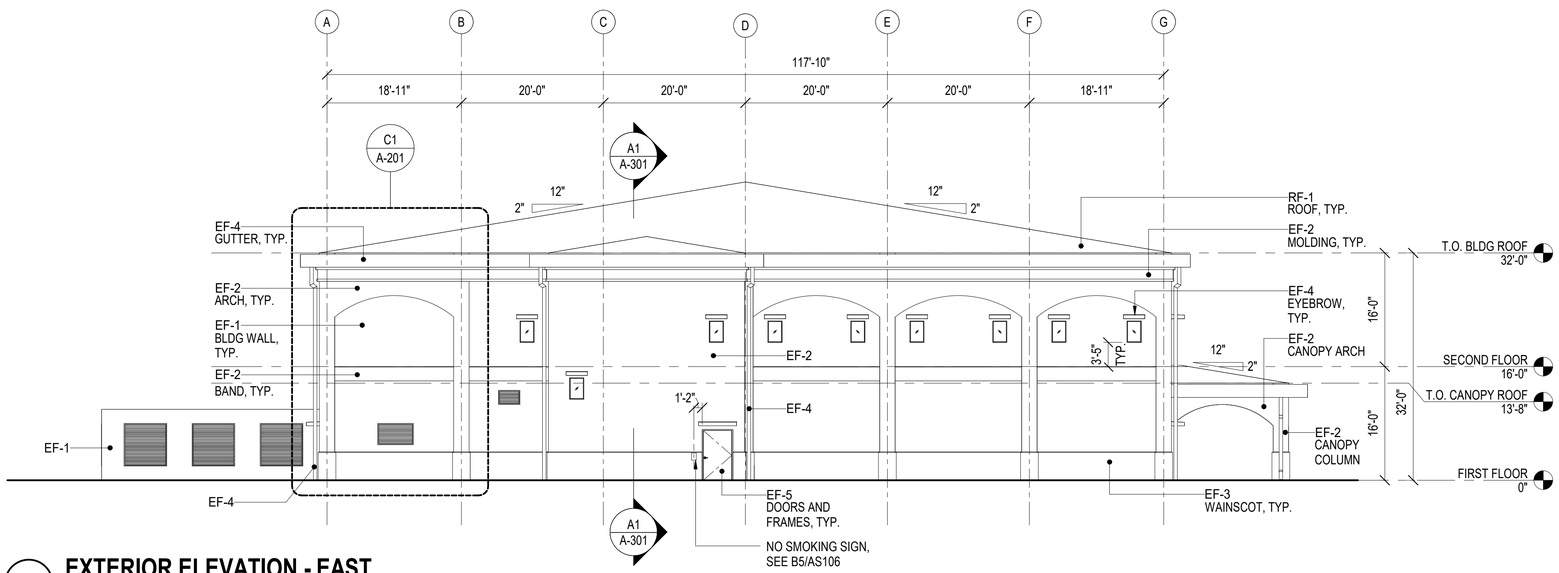

C3 EXTERIOR ELEVATION - EAST
SCALE: 3/32" = 1'-0" (A-101)

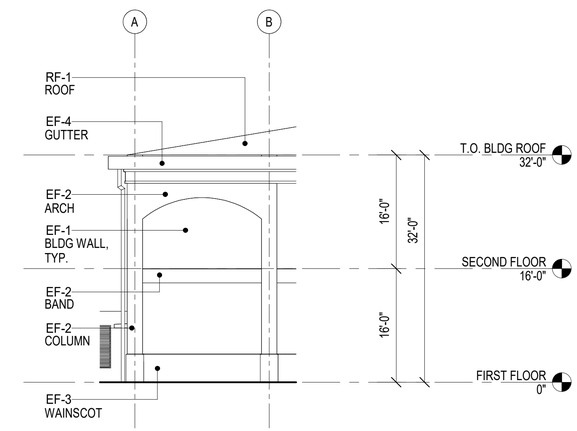

C1 OPTION ITEM #2
SCALE: 3/32" = 1'-0" (A-201)

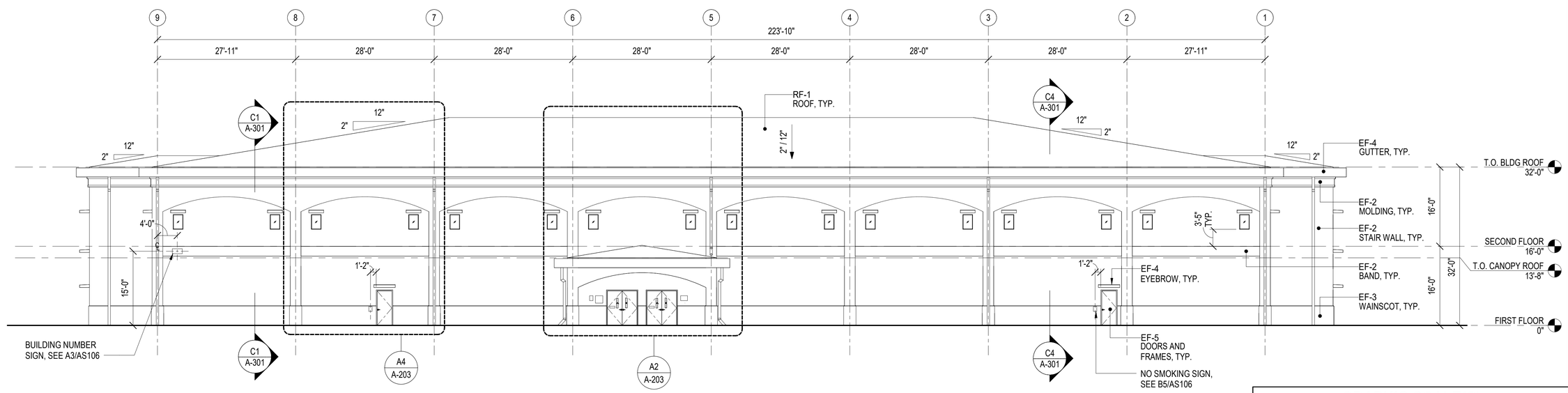

A1 EXTERIOR ELEVATION - NORTH
SCALE: 3/32" = 1'-0" (A-101)

GRAPHIC SCALE(S)

3/16" = 1' - 0" 0 5' 10' 20'

3/32" = 1' - 0" 0 5' 10' 20' 40'

SYM	DESCRIPTION	DATE	APPR

NAVFAC

MYLES M. MICHIBATA LICENSED PROFESSIONAL ARCHITECT No. 12367 HAWAII, U.S.A.
LIC. EXP 04/30/26 SEAL

ASMD LLC. A/E INFO

APPROVED
Evan Mizel
FOR COMMANDER NAVFAC

ACTIVITY
NATHANIEL PYRON, MILCON PLANNER, DPPH

SATISFACTORY TO DATE	3/10/2026
DES JG / RLB DRW RLB CHK JG	
PM/DM	DKS/DMK
BRANCH MANAGER	KYM
CHIEF ENG/ARCH	KYM
FIRE PROTECTION	RYO

DEPARTMENT OF THE NAVY
NAVFAC PACIFIC
U.S. NAVSUPPACT

NAVAL FACILITIES ENGINEERING SYSTEMS COMMAND
NAVAL FACILITIES ENGINEERING SYSTEMS COMMAND ~ PACIFIC
MAKALAPA, HAWAII

MCB CAMP BLAZ, GUAM

JFY 2022 PROJECT J-875
BATTLE STAFF TRAINING FACILITY

EXTERIOR ELEVATIONS - NORTH AND EAST & OPTION ITEM #2

SCALE:	AS NOTED
EPROJECT NO.:	1696746
CONSTR. CONTR. NO.	
NAVFAC DRAWING NO.	17321925
SHEET	129 OF 468

A-201

DRAWFORM REVISION: 25 AUGUST 2020

A-201
3/12/2026 9:12:16 PM
C:\Users\BeamonsrDocuments\BLDG-J875-1696746-A_rbaintonsrF4LVN.rvt

GENERAL SHEET NOTES

1. REFER TO SHEET A-611 FOR EXTERIOR COLOR AND MATERIAL SCHEDULE.
2. FLUID-APPLIED AIR BARRIER MEMBRANE IS TO BE APPLIED BEFORE THE EXTERIOR FINISH SYSTEMS.

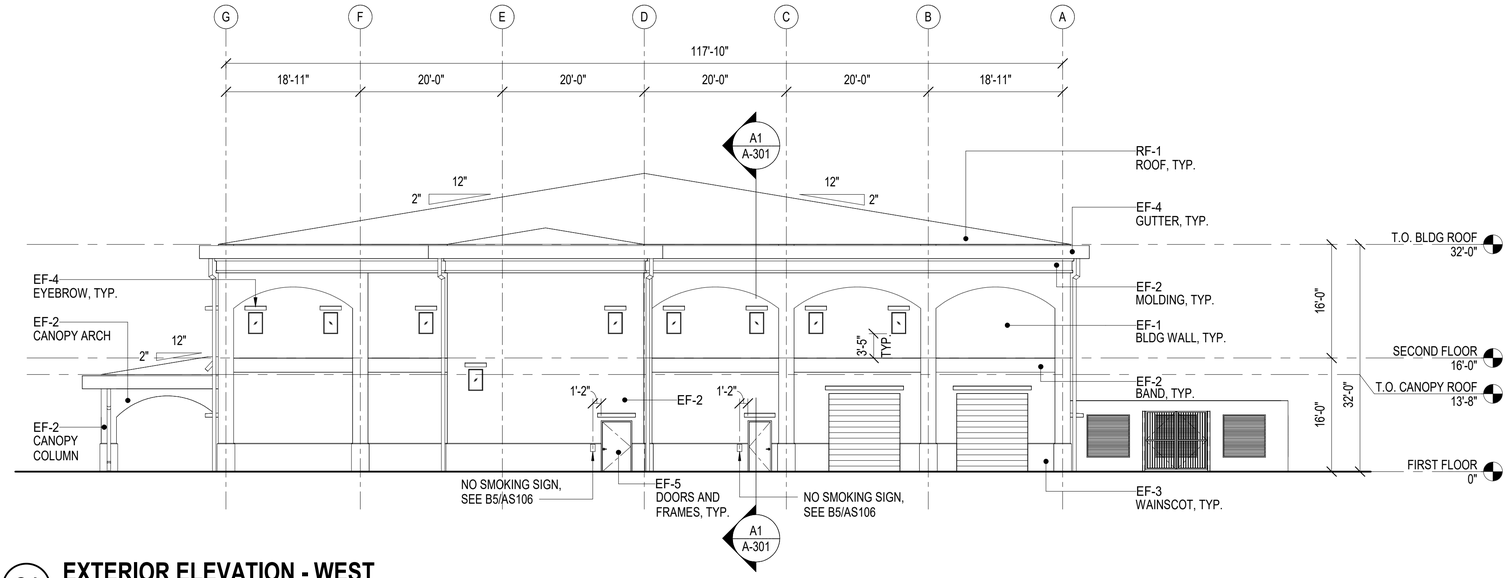

C1 EXTERIOR ELEVATION - WEST

SCALE: 3/32" = 1'-0" (A-101)

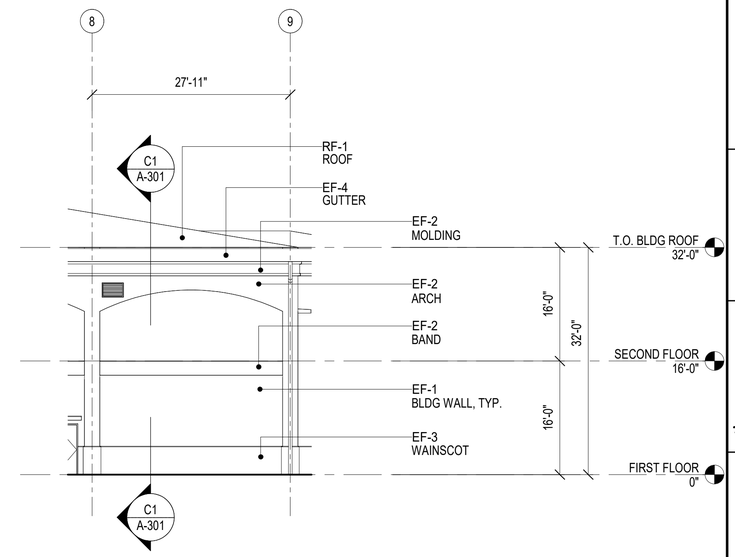

C4 OPTION ITEM #2

SCALE: 3/32" = 1'-0" (A-202)

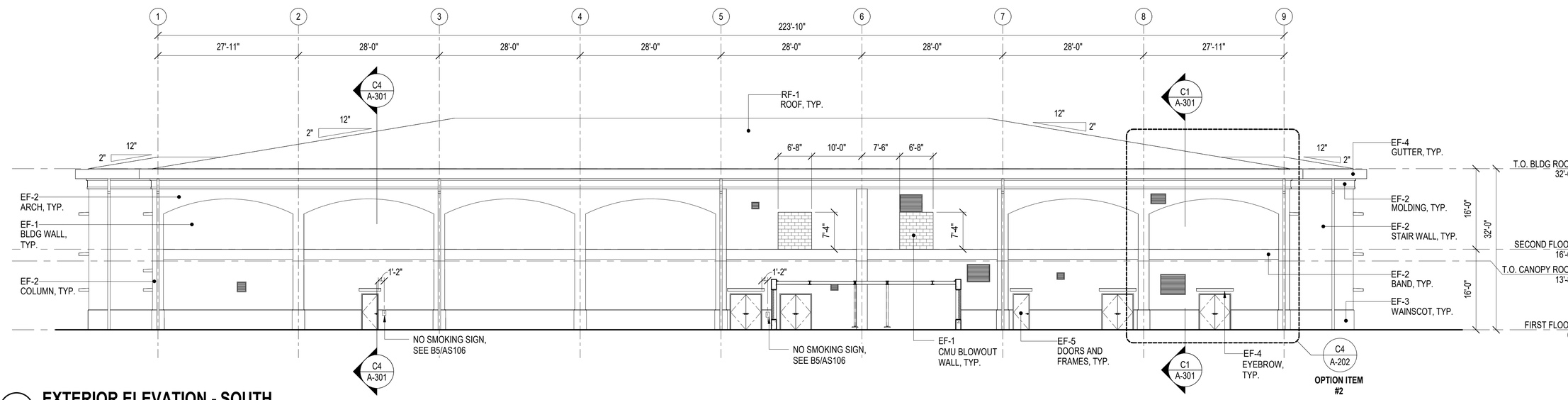

A1 EXTERIOR ELEVATION - SOUTH

SCALE: 3/32" = 1'-0" (A-101)

GRAPHIC SCALE(S)

3/32" = 1' - 0" 0 5' 10' 20' 40'

SYM	DESCRIPTION	DATE	APPR

NAVFAC

MYLES M. MICHIBATA LICENSED PROFESSIONAL ARCHITECT No. 12367 HAWAII, U.S.A.
LIC. EXP 04/30/26 SEAL

ASMD LLC. A/E INFO

APPROVED Evan Miyazaki
FOR COMMANDER NAVFAC

ACTIVITY
NATHANIEL PYRON, MILCON PLANNER, DPPH

SATISFACTORY TO DATE 3/10/2026
DES JG / RLB DRW RLB CHK JG
PMDM DKS/DMK
BRANCH MANAGER KYM
CHIEF ENG/ARCH KYM
FIRE PROTECTION RYO

DEPARTMENT OF THE NAVY
NAVFAC PACIFIC
NAVAL FACILITIES ENGINEERING SYSTEMS COMMAND ~ PACIFIC
NAVAL FACILITIES ENGINEERING SYSTEMS COMMAND
MAKALAPA, HAWAII
U.S. NAVSUPPACT
MCB CAMP BLAZ, GUAM
JFY 2022 PROJECT J-875
BATTLE STAFF TRAINING FACILITY
EXTERIOR ELEVATIONS - SOUTH AND WEST & OPTION ITEM #2

SCALE: AS NOTED
EPROJECT NO.: 1696746
CONSTR. CONTR. NO.
NAVFAC DRAWING NO. 17321926
SHEET 130 OF 468

A-202

DRAWFORM REVISION: 25 AUGUST 2020

A-202
3/10/2026 9:12:18 PM
C:\Users\rlbattlone\Documents\BLDG-J875-1696746-A_rlbaltlonsaFaLLN.rvt

GENERAL SHEET NOTES

1. REFER TO SHEET A-611 FOR EXTERIOR COLOR AND MATERIAL SCHEDULE.
2. FLUID-APPLIED AIR BARRIER MEMBRANE IS TO BE APPLIED BEFORE THE EXTERIOR FINISH SYSTEMS.

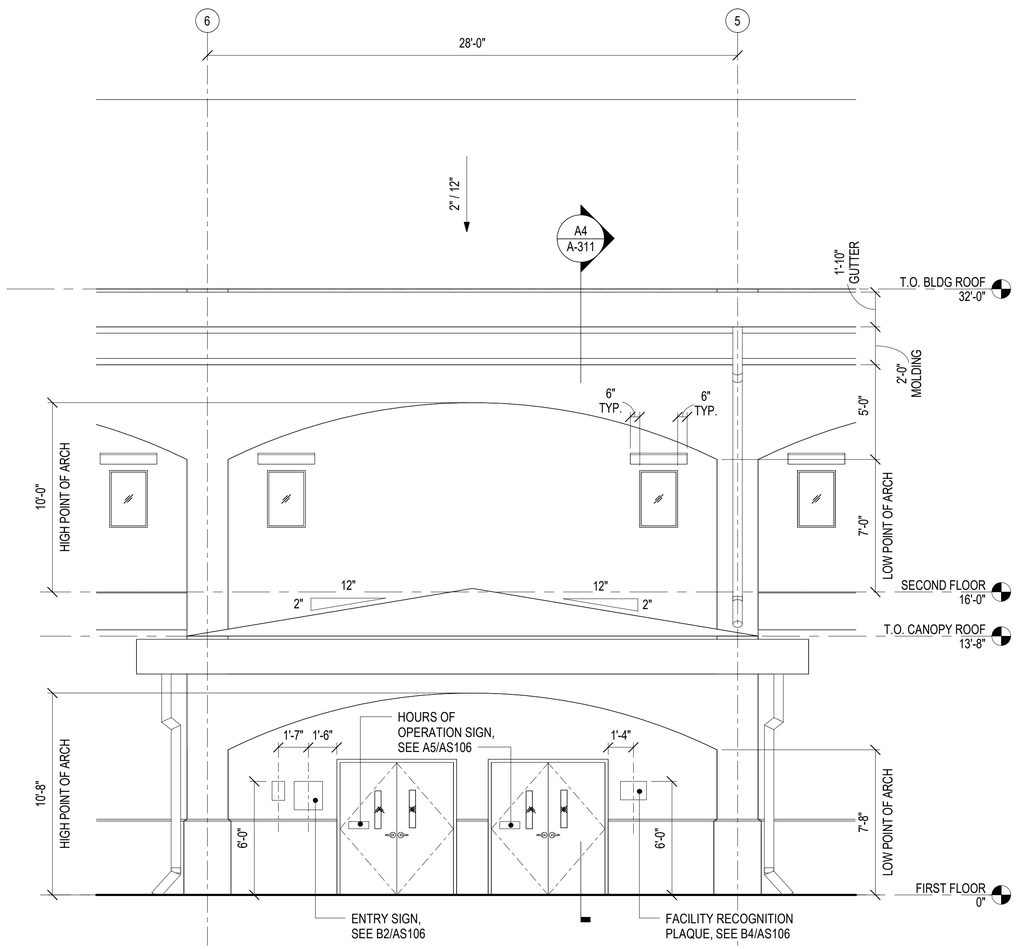

A2 DETAILED EXTERIOR ELEVATION - ENTRY CANOPY

SCALE: 1/4" = 1'-0" (A-201)

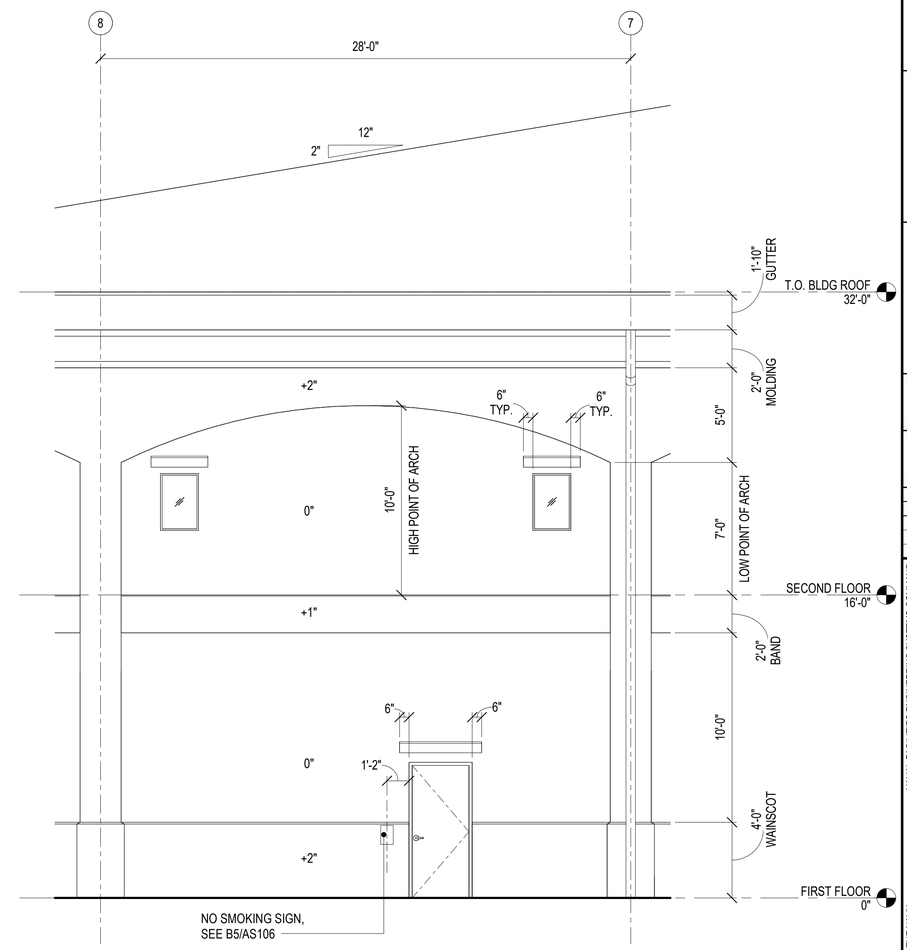

A4 DETAILED EXTERIOR ELEVATION - TYPICAL

SCALE: 1/4" = 1'-0" (A-201)

GRAPHIC SCALE(S)

3/32" = 1' - 0" 0 5' 10' 20' 40'

SYM	DESCRIPTION	DATE	APPR

NAVFAC

MYLES M. MICHIBATA LICENSED PROFESSIONAL ARCHITECT No. 12367 HAWAII, U.S.A.
LIC. EXP 04/30/26 SEAL

ASMD LLC. A/E INFO

APPROVED Evan Mizel
FOR COMMANDER NAVFAC

ACTIVITY: NATHANIEL PYRON, MILCON PLANNER, DPPH
SATISFACTORY TO DATE: 3/10/2026
DES JG / RLB DRW RLB CHK JG
PM/DM: DKS/DMK
BRANCH MANAGER: KYM
CHIEF ENG/ARCH: KYM
FIRE PROTECTION: RYO

DEPARTMENT OF THE NAVY
NAVFAC PACIFIC
U.S. NAVSUPPACT
NAVAL FACILITIES ENGINEERING SYSTEMS COMMAND
NAVAL FACILITIES ENGINEERING SYSTEMS COMMAND ~ PACIFIC
MAKALAPA, HAWAII
MCB CAMP BLAZ, GUAM
JFY 2022 PROJECT J-875
BATTLE STAFF TRAINING FACILITY
DETAILED EXTERIOR ELEVATIONS

SCALE: AS NOTED
EPROJECT NO.: 1696746
CONSTR. CONTR. NO.
NAVFAC DRAWING NO. 17321927
SHEET 131 OF 468
A-203
DRAWFORM REVISION: 25 AUGUST 2020

A-203
3/12/2026 9:12:19 PM
C:\Users\tBallmond\Documents\BLDG-3875-1696746-A_rbaintionsFdLVN.rvt

GENERAL SHEET NOTES

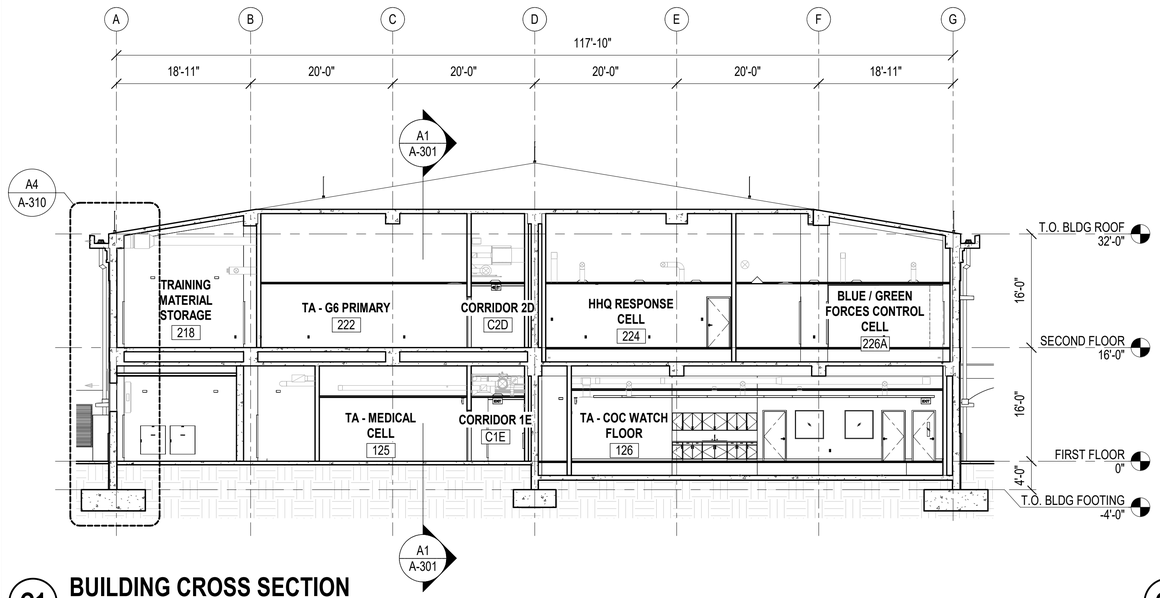

C1 BUILDING CROSS SECTION
SCALE: 3/32" = 1'-0" (A-101)

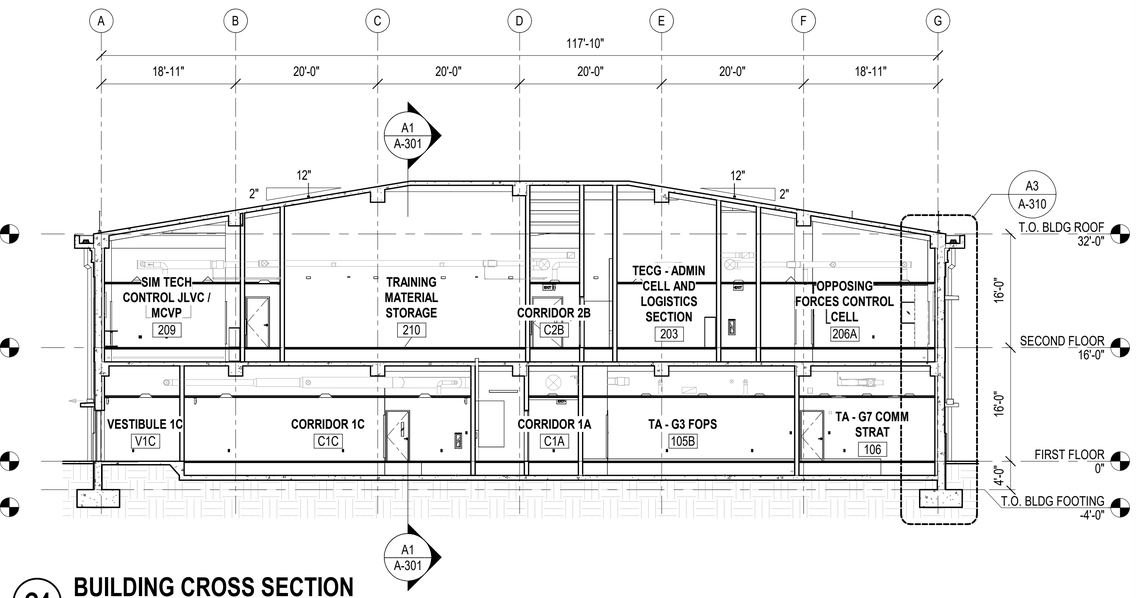

C4 BUILDING CROSS SECTION
SCALE: 3/32" = 1'-0" (A-101)

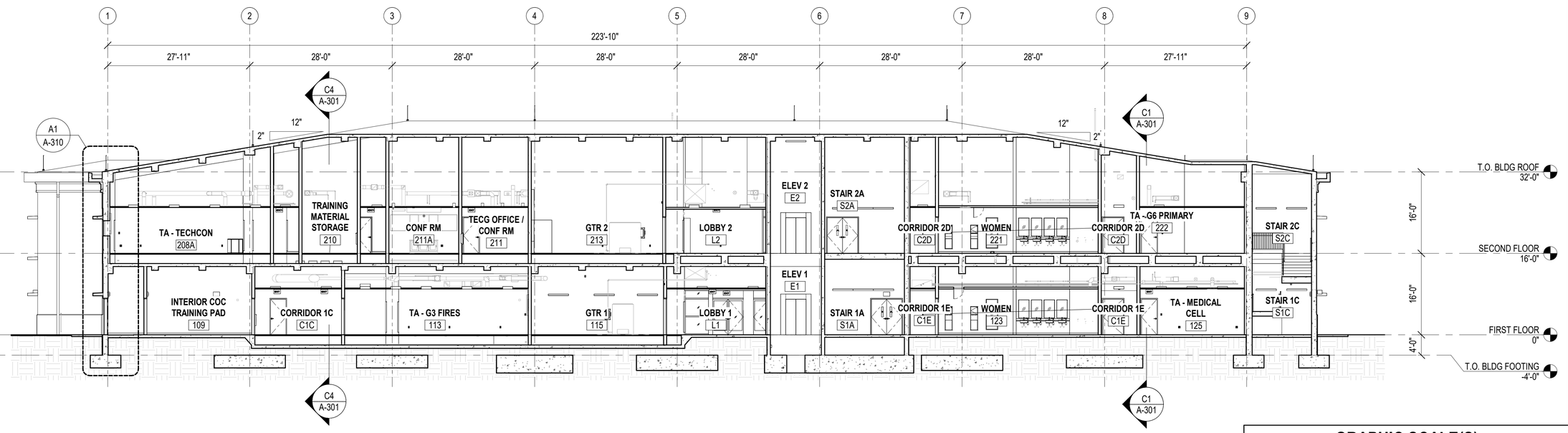

A1 BUILDING LONGITUDINAL SECTION
SCALE: 3/32" = 1'-0" (A-101)

GRAPHIC SCALE(S)
3/32" = 1' - 0" 0 5' 10' 20' 40'

SYM	DESCRIPTION	DATE	APPR

NAVFAC

MYLES M. MICHIBATA LICENSED PROFESSIONAL ARCHITECT No. 12367 HAWAII, U.S.A.
LIC. EXP 04/30/26

ASMD LLC.
A/E INFO

APPROVED
FOR COMMANDER NAVFAC

ACTIVITY
NATHANIEL PYRON, MILCON PLANNER, DPPH
SATISFACTORY TO DATE 3/10/2026
DES JG / RLB DRW RLB CHK JG
PM/DM DKS/DMK
BRANCH MANAGER KYM
CHIEF ENG/ARCH KYM
FIRE PROTECTION RYO

DEPARTMENT OF THE NAVY
NAVFAC PACIFIC
U.S. NAVSUPPACT
NAVAL FACILITIES ENGINEERING SYSTEMS COMMAND ~ PACIFIC
NAVAL FACILITIES ENGINEERING SYSTEMS COMMAND
MAKALAPA, HAWAII
MCB CAMP BLAZ, GUAM
JFY 2022 PROJECT J-875
BATTLE STAFF TRAINING FACILITY
BUILDING SECTIONS

SCALE: AS NOTED
EPROJECT NO.: 1696746
CONSTR. CONTR. NO.
NAVFAC DRAWING NO. 17321928
SHEET 132 OF 468
A-301

DRAWFORM REVISION: 25 AUGUST 2020

A-301
3/12/2026 9:12:21 PM
C:\Users\rlbatitonal\Documents\BLDG-8975-1696746-A_rlbatitonal-FALVN.rvt

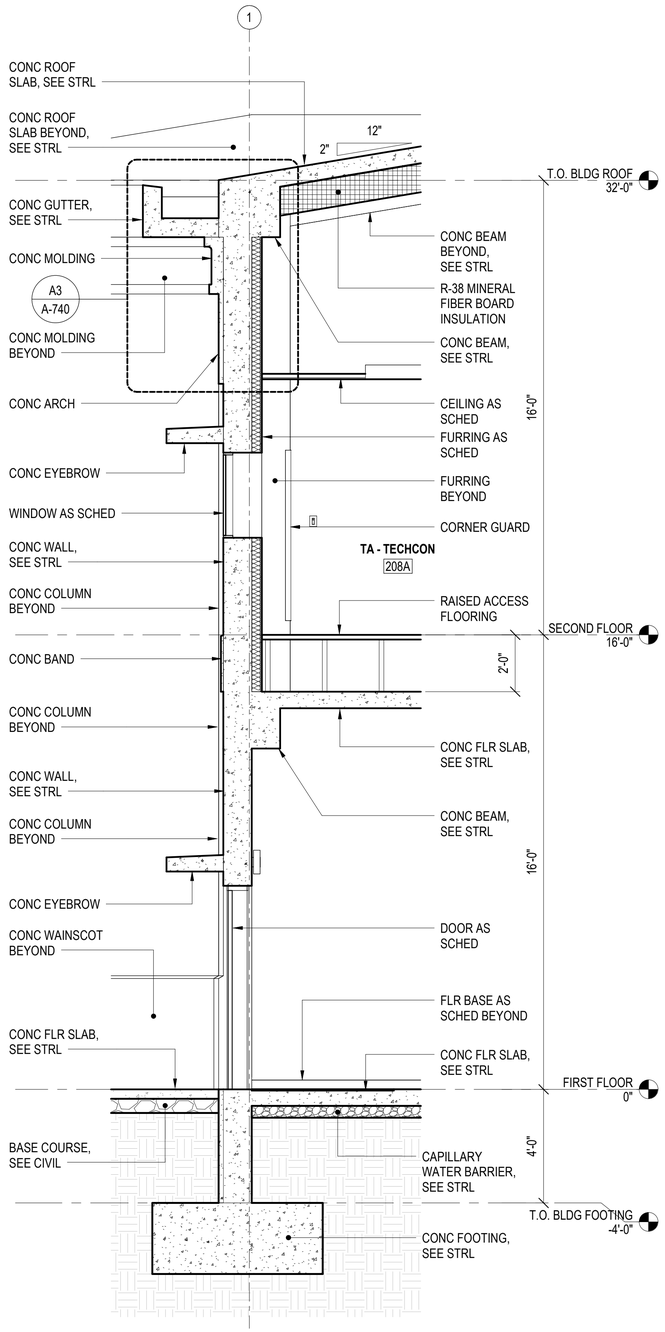

A1 WALL SECTION

SCALE: 3/8" = 1'-0" (A-301)

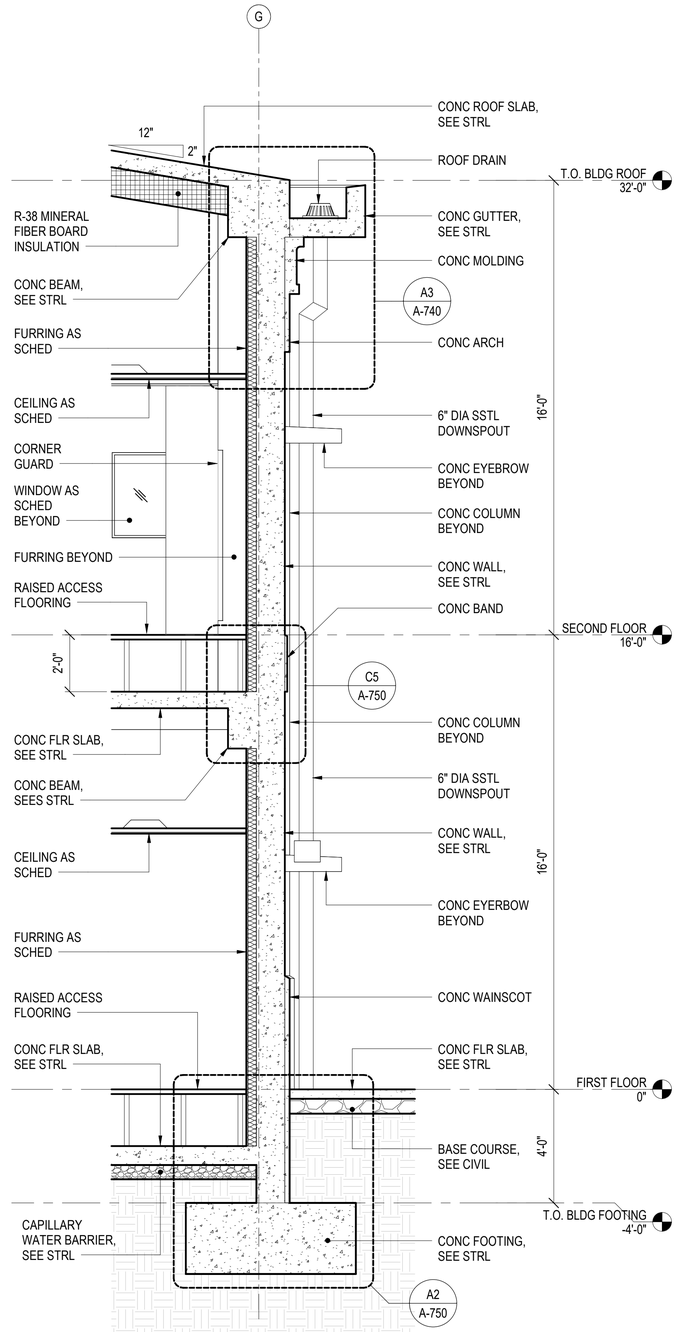

A3 WALL SECTION

SCALE: 3/8" = 1'-0" (A-301)

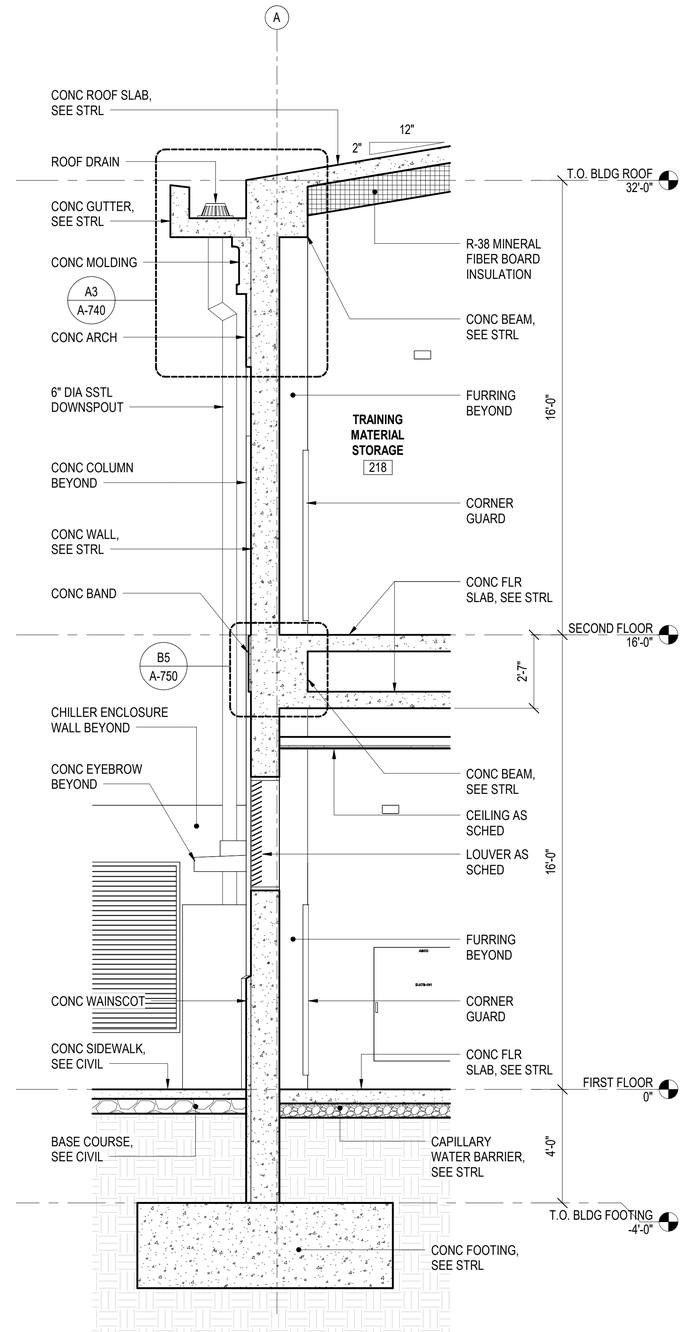

A4 WALL SECTION

SCALE: 3/8" = 1'-0" (A-301)

GRAPHIC SCALE(S)

3/8" = 1' - 0" 0 1' 2' 3' 4' 5' 10'

SYM	DESCRIPTION	DATE	APPR

NAVFAC

MYLES M. MICHIBATA LICENSED PROFESSIONAL ARCHITECT No. 12367 HAWAII, U.S.A.
LIC. EXP 04/30/26 SEAL

ASMD LLC.

APPROVED
FOR COMMANDER NAVFAC

ACTIVITY
NATHANIEL PYRON, MILCON PLANNER, DPPH
SATISFACTORY TO DATE 3/10/2026
DES JG / RLB DRW RLB CHK JG
PM/DM DKS/DMK
BRANCH MANAGER KYM
CHIEF ENG/ARCH KYM
FIRE PROTECTION RYO

DEPARTMENT OF THE NAVY
NAVFAC PACIFIC
NAVAL FACILITIES ENGINEERING SYSTEMS COMMAND
U.S. NAVSUPPACT
NAVAL FACILITIES ENGINEERING SYSTEMS COMMAND ~ PACIFIC
MAKALAPA, HAWAII
MCB CAMP BLAZ, GUAM
JFY 2022 PROJECT J-875
BATTLE STAFF TRAINING FACILITY
WALL SECTIONS

SCALE: AS NOTED
EPROJECT NO.: 1696746
CONSTR. CONTR. NO.
NAVFAC DRAWING NO. 17321929
SHEET 133 OF 468
A-310
DRAWFORM REVISION: 25 AUGUST 2020

A-310
3/12/2026 9:12:22 PM
C:\Users\tBallinger\Documents\BLDG-875-1696746-A_rbalintonsnF4LVN.rvt

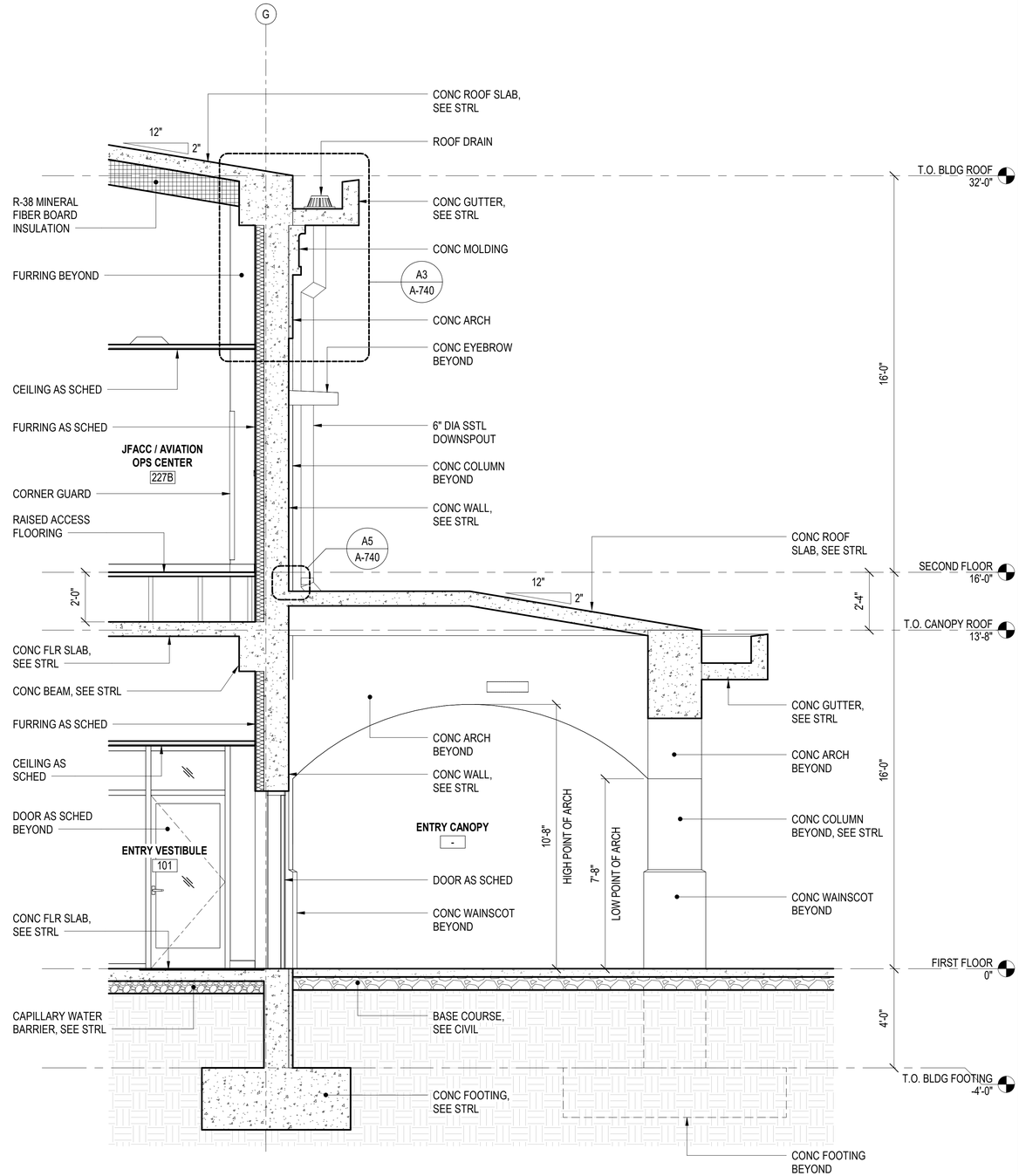

A4 WALL SECTION

SCALE: 3/8" = 1'-0" (A-102)

GRAPHIC SCALE(S)

3/8" = 1' - 0"

0 1' 2' 3' 4' 5' 10'

SYM	DESCRIPTION	DATE	APPR

NAVFAC

MYLES M. MICHIBATA
LICENSED PROFESSIONAL ARCHITECT
No. 12367
HAWAII, U.S.A.
LIC. EXP 04/30/26 SEAL

ASMD LLC.
A/E INFO

APPROVED
FOR COMMANDER NAVFAC

ACTIVITY
NATHANIEL PYRON, MILCON PLANNER, DPPH

SATISFACTORY TO DATE 3/10/2026

DES JG / RLB	DRW RLB	CHK JG	
PM/DM	DKS/DMK		
BRANCH MANAGER	KYM		
CHIEF ENG/ARCH	KYM		
FIRE PROTECTION	RYO		

DEPARTMENT OF THE NAVY
NAVFAC PACIFIC
NAVAL FACILITIES ENGINEERING SYSTEMS COMMAND
U.S. NAVSUPPACT
NAVAL FACILITIES ENGINEERING SYSTEMS COMMAND ~ PACIFIC
MAKALAPA, HAWAII
MCB CAMP BLAZ, GUAM
JFY 2022 PROJECT J-875
BATTLE STAFF TRAINING FACILITY
WALL SECTIONS

SCALE: AS NOTED
EPROJECT NO.: 1696746
CONSTR. CONTR. NO.
NAVFAC DRAWING NO. 17321930
SHEET 134 OF 468
A-311

DRAWFORM REVISION: 25 AUGUST 2020

A-311
3/12/2026 9:12:23 PM
C:\Users\rlballinton\Documents\BLDG-875-1696746-A_rlballintonsaF4LVNrvt

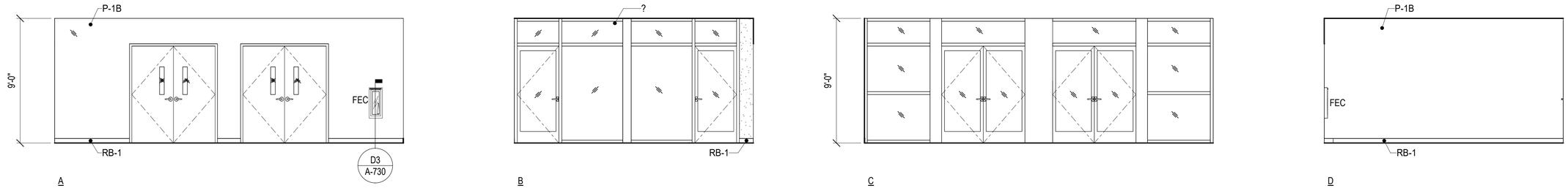

D1 ENTRY VESTIBULE 101

SCALE: 1/4" = 1'-0"

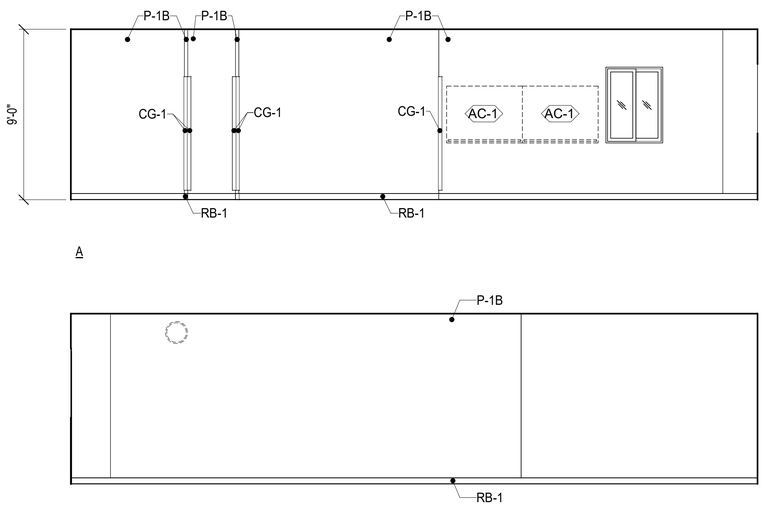

B1 TA - HQ CAMP COMMANDANT 102

SCALE: 1/4" = 1'-0"

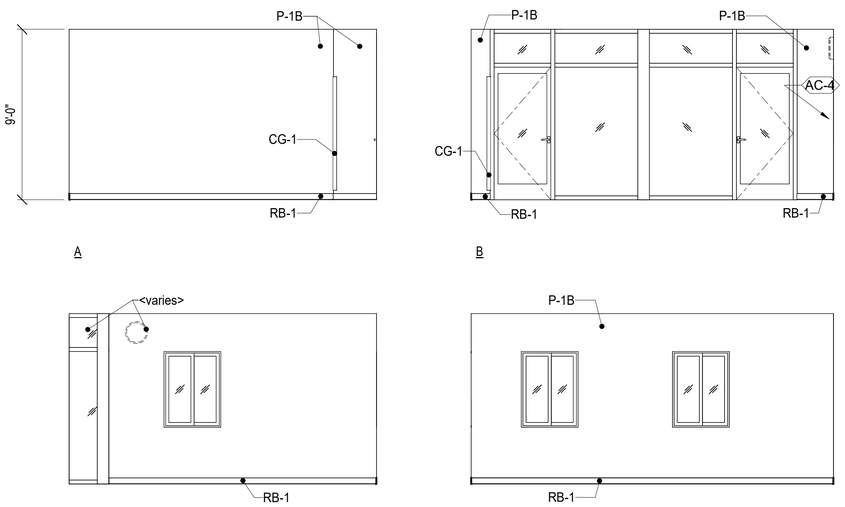

B4 ENTRY CONTROL POINT 102A

SCALE: 1/4" = 1'-0"

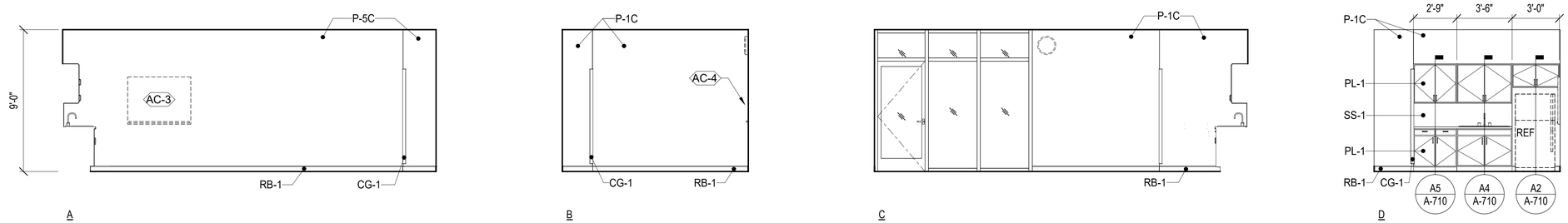

A1 BREAK ROOM 103

SCALE: 1/4" = 1'-0"

GRAPHIC SCALE(S)

1/4" = 1' - 0" 0 1' 5' 10' 15'

SYM	DESCRIPTION	DATE	APPR

NAVFAC

MYLES M. MICHIBATA LICENSED PROFESSIONAL ARCHITECT No. 12367 HAWAII, U.S.A.
LIC. EXP 04/30/26

ASMD LLC. A/E INFO

APPROVED
FOR COMMANDER NAVFAC

ACTIVITY
NATHANIEL PYRON, MILCON PLANNER, DPPH
SATISFACTORY TO DATE 3/10/2026

DES JG / RLB	DRW RLB	CHK JG	
PM/DM		DKS/DMK	
BRANCH MANAGER		KYM	
CHIEF ENG/ARCH		KYM	
FIRE PROTECTION		RYO	

DEPARTMENT OF THE NAVY
NAVFAC PACIFIC
NAVAL FACILITIES ENGINEERING SYSTEMS COMMAND
NAVAL FACILITIES ENGINEERING SYSTEMS COMMAND ~ PACIFIC
MAKALAPA, HAWAII
U.S. NAVSUPPACT
MCB CAMP BLAZ, GUAM

JFY 2022 PROJECT J-875
BATTLE STAFF TRAINING FACILITY

INTERIOR ELEVATIONS

SCALE: AS NOTED
EPROJECT NO.: 1696746
CONSTR. CONTR. NO.
NAVFAC DRAWING NO. 17321931
SHEET 135 OF 468

A-401

DRAWFORM REVISION: 25 AUGUST 2020

3/12/2026 9:12:26 PM
C:\Users\rblaimont\Documents\BLDG-875-1696746-A_rblaimontmaFHLVN.rvt
A-401

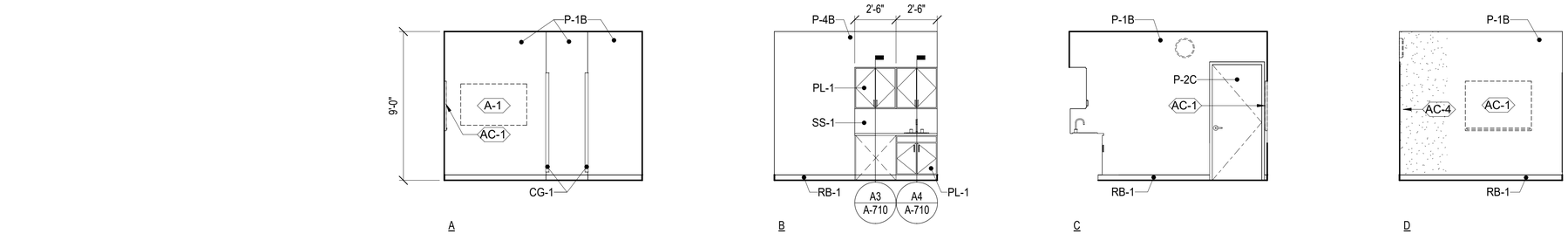

D1 NURSING ROOM 104

SCALE: 1/4" = 1'-0"

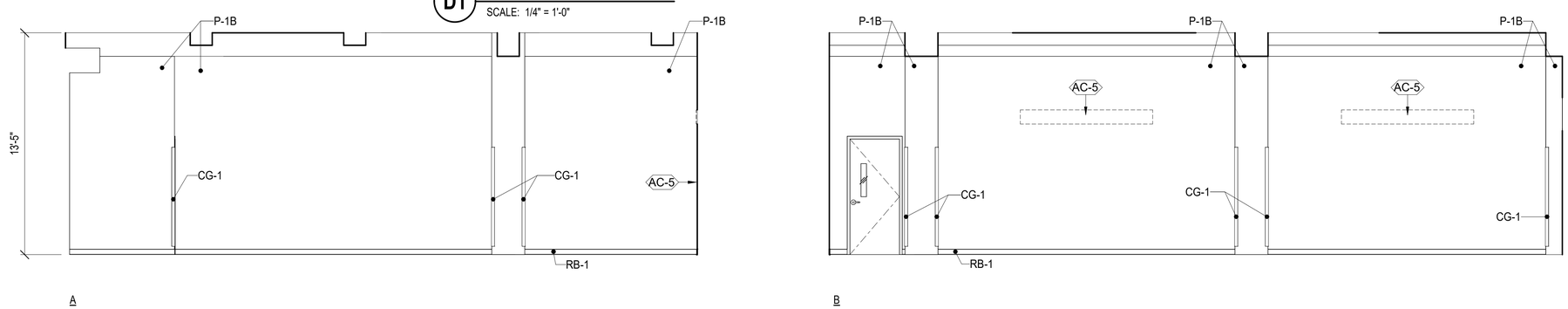

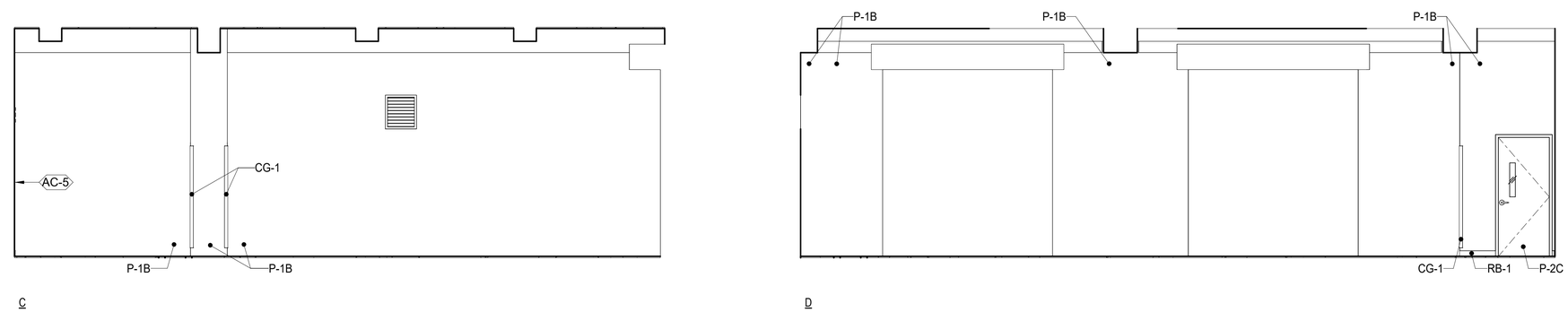

B1 INTERIOR COC TRAINING PAD 109

SCALE: 1/4" = 1'-0"

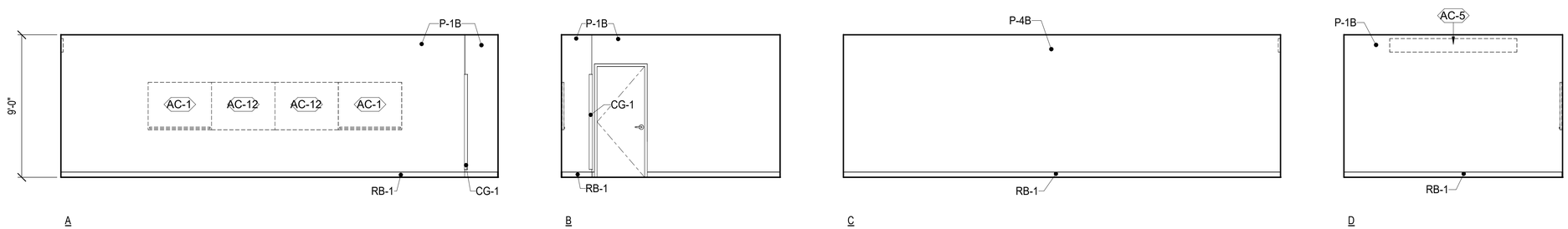

A1 SVTC CONF RM / SIPR CAFE 114

SCALE: 1/4" = 1'-0"

GRAPHIC SCALE(S)

1/4" = 1' - 0" 0 1' 5' 10' 15'

SYM	DESCRIPTION	DATE	APPR

NAVFAC

MYLES M. MICHIBATA LICENSED PROFESSIONAL ARCHITECT No. 12367 HAWAII, U.S.A.
LIC. EXP 04/30/26 SEAL

ASMD LLC. A/E INFO

APPROVED
Evan Mizel
FOR COMMANDER NAVFAC

ACTIVITY
NATHANIEL PYRON, MILCON PLANNER, DPPH

SATISFACTORY TO DATE	3/10/2026
DES JG / RLB DRW RLB CHK JG	
PMDM	DKS/DMK
BRANCH MANAGER	KYM
CHIEF ENG/ARCH	KYM
FIRE PROTECTION	RYO

DEPARTMENT OF THE NAVY
NAVFAC PACIFIC
NAVAL FACILITIES ENGINEERING SYSTEMS COMMAND
NAVAL FACILITIES ENGINEERING SYSTEMS COMMAND ~ PACIFIC
MAKALAPA, HAWAII
U.S. NAVSUPPACT
MCB CAMP BLAZ, GUAM
JFY 2022 PROJECT J-875
BATTLE STAFF TRAINING FACILITY
INTERIOR ELEVATIONS

SCALE: AS NOTED
EPROJECT NO.: 1696746
CONSTR. CONTR. NO.
NAVFAC DRAWING NO. 17321932
SHEET 136 OF 468
A-402

DRAWFORM REVISION: 25 AUGUST 2020

3/12/2026 9:12:28 PM
C:\Users\tBaltrons\Documents\BLDG-875-1696746-A_rbaltrons\FS-LVN.rvt
A-402

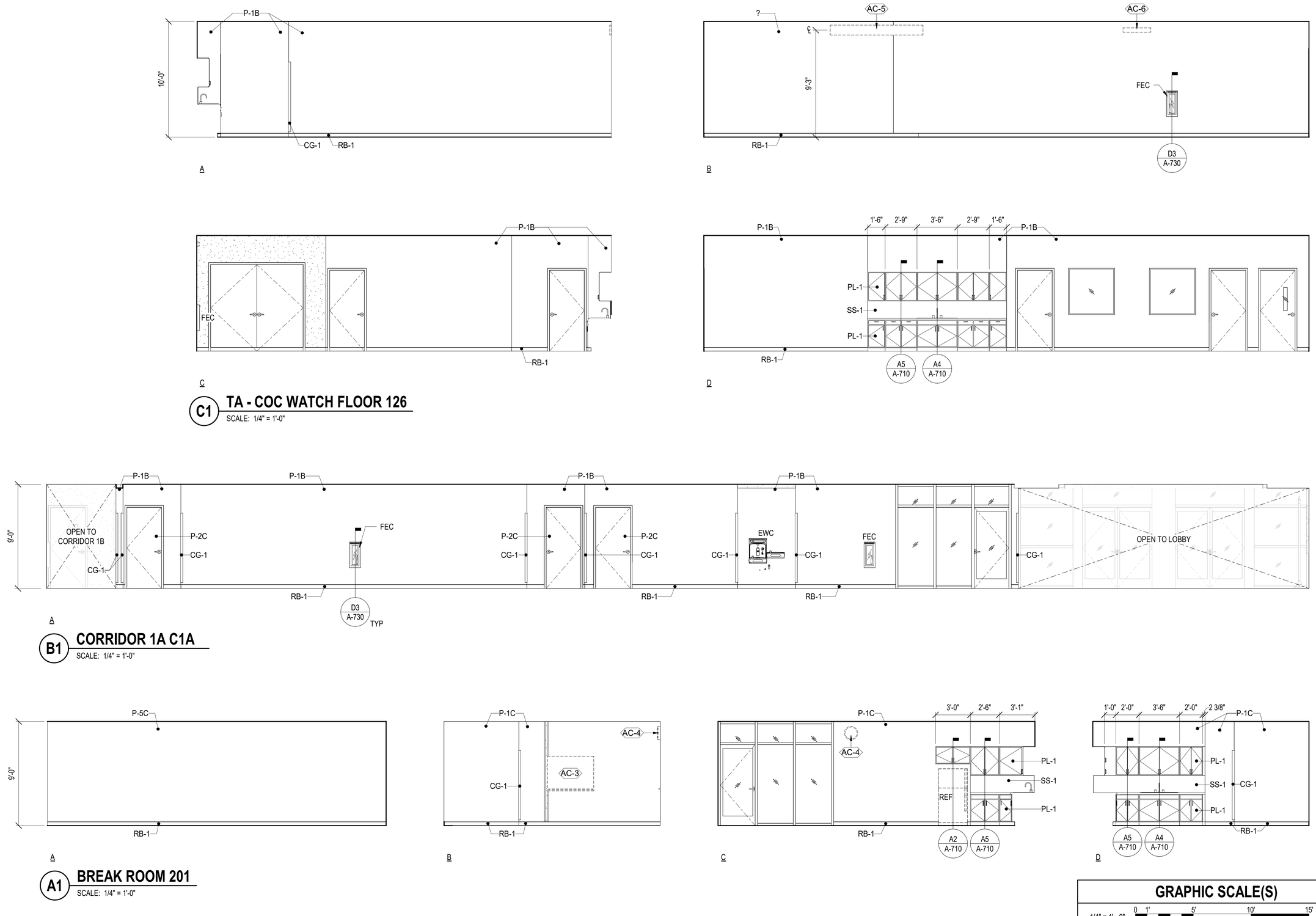

SYM	DESCRIPTION	DATE	APPR

NAVFAC

MYLES M. MICHIBATA
LICENSED PROFESSIONAL ARCHITECT
No. 12367
HAWAII, U.S.A.
LIC. EXP 04/30/26

ASMD LLC.
A/E INFO

APPROVED
Evan Mizel
FOR COMMANDER NAVFAC

ACTIVITY
NATHANIEL PYRON, MILCON PLANNER, DPPH

SATISFACTORY TO DATE	3/10/2026
DES JG / RLB DRW RLB CHK JG	
PM/DM	DKS/DMK
BRANCH MANAGER	KYM
CHIEF ENG/ARCH	KYM
FIRE PROTECTION	RYO

DEPARTMENT OF THE NAVY
NAVFAC PACIFIC
U.S. NAVSUPPACT

NAVAL FACILITIES ENGINEERING SYSTEMS COMMAND
NAVAL FACILITIES ENGINEERING SYSTEMS COMMAND ~ PACIFIC
MAKALAPA, HAWAII

MCB CAMP BLAZ, GUAM

JFY 2022 PROJECT J-875
BATTLE STAFF TRAINING FACILITY

INTERIOR ELEVATIONS

SCALE: AS NOTED
EPROJECT NO.: 1696746
CONSTR. CONTR. NO.

NAVFAC DRAWING NO.
17321933

SHEET 137 OF 468

A-403

DRAWFORM REVISION: 25 AUGUST 2020

A-403
3/12/2026 9:12:30 PM
C:\Users\BlaimoraDocuments\BLDG-3875-1696746-A_rhabintionsFdLVN.rvt

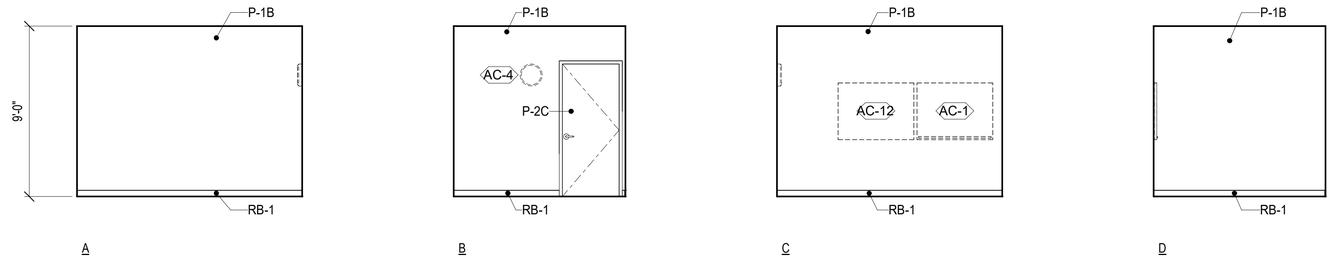

D1 OFFICE 211B

SCALE: 1/4" = 1'-0"

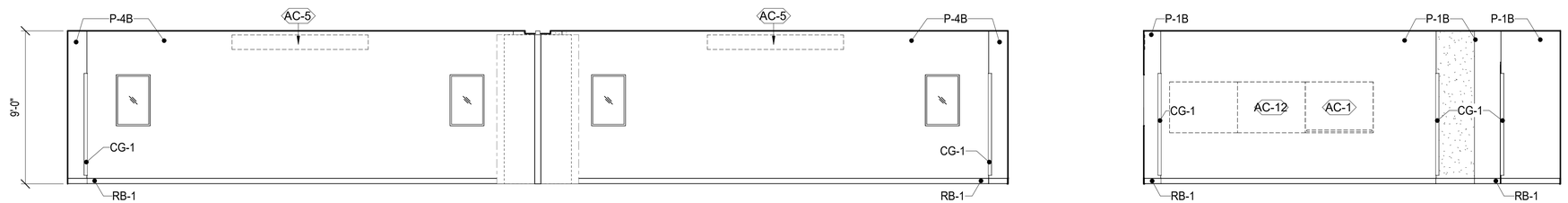

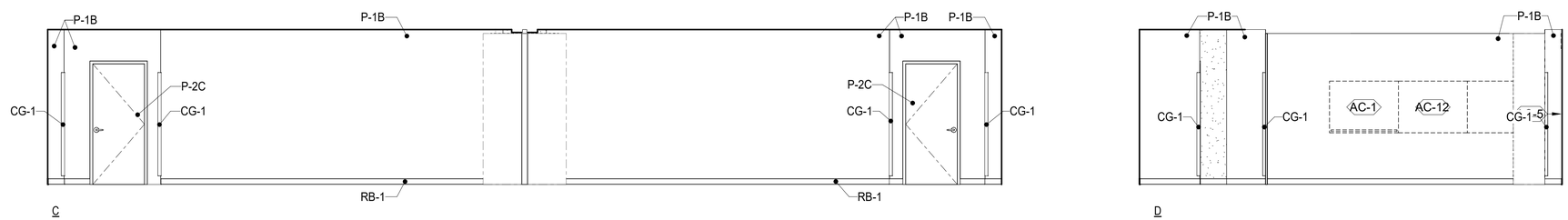

B1 JFACC / AVIATION OPS CENTER 227 A & B

SCALE: 1/4" = 1'-0"

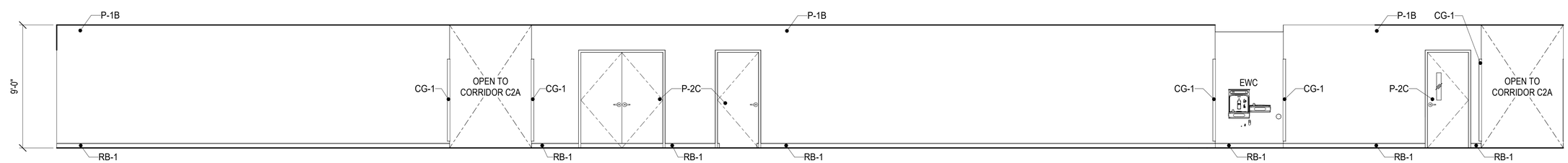

A1 CORRIDOR 2B C2B

SCALE: 1/4" = 1'-0"

GRAPHIC SCALE(S)

1/4" = 1' - 0" 0 1' 5' 10' 15'

SYM	DESCRIPTION	DATE	APPR

NAVFAC

MYLES M. MICHIBATA — LICENSED PROFESSIONAL ARCHITECT No. 12367 — HAWAII, U.S.A.
LIC. EXP 04/30/26 SEAL

ASMD LLC. A/E INFO

APPROVED
Evan Mizel
FOR COMMANDER NAVFAC

ACTIVITY
NATHANIEL PYRON, MILCON PLANNER, DPPH

SATISFACTORY TO DATE 3/10/2026

DES JG / RLB	DRW RLB	CHK JG	
PMDM			DKS/DMK
BRANCH MANAGER			KYM
CHIEF ENG/ARCH			KYM
FIRE PROTECTION			RYO

DEPARTMENT OF THE NAVY
NAVAL FACILITIES ENGINEERING SYSTEMS COMMAND
NAVFAC PACIFIC
U.S. NAVSUPPACT

NAVAL FACILITIES ENGINEERING SYSTEMS COMMAND ~ PACIFIC
MAKALAPA, HAWAII

MCB CAMP BLAZ, GUAM

JFY 2022 PROJECT J-875
BATTLE STAFF TRAINING FACILITY

INTERIOR ELEVATIONS

SCALE: AS NOTED
EPROJECT NO.: 1696746
CONSTR. CONTR. NO.
NAVFAC DRAWING NO. 17321934
SHEET 138 OF 468

A-404

DRAWFORM REVISION: 25 AUGUST 2020

3/10/2026 9:12:32 PM
C:\Users\BalmonaI\Documents\BLDG-3875-1696746-A_rbaltimonaF4LVN.rvt
A-404

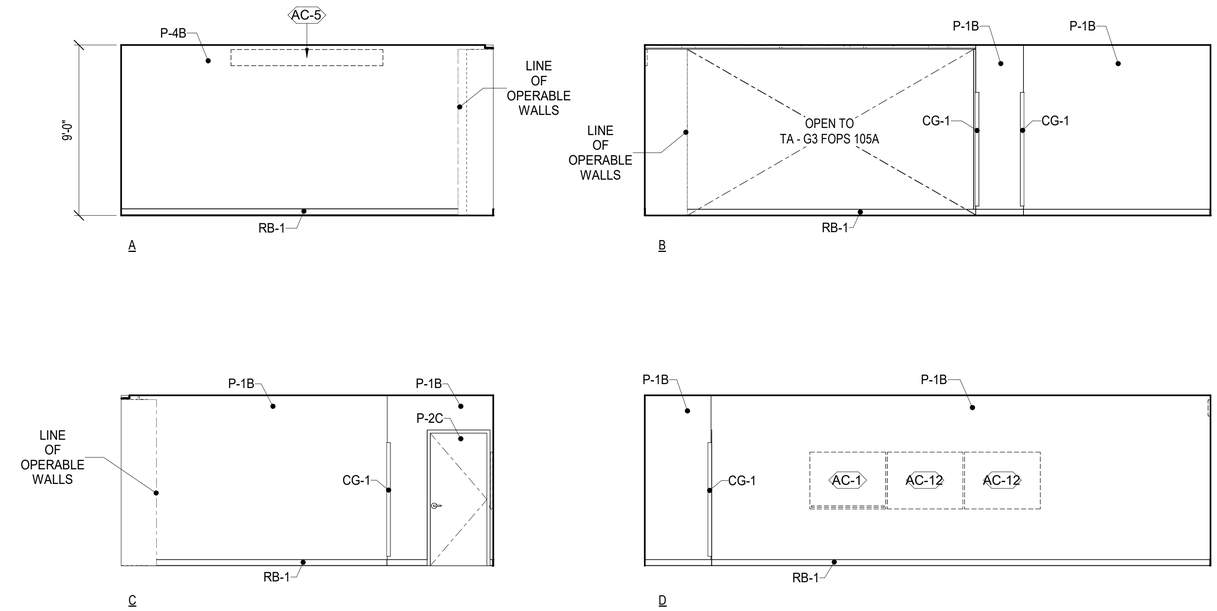

C3 TA - G3 FOPS 105B

SCALE: 1/4" = 1'-0"

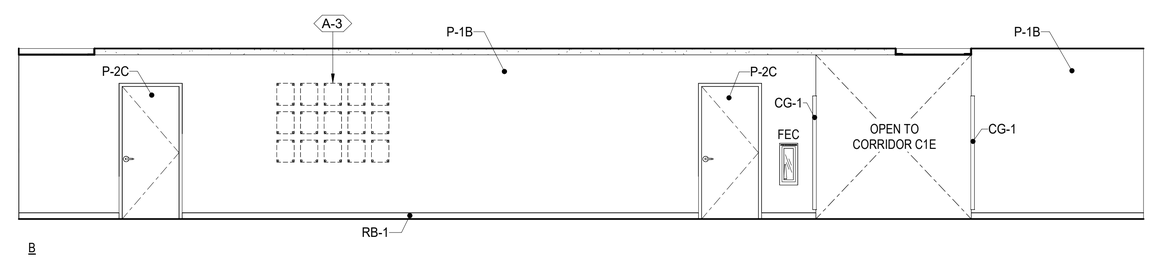

B3 LOBBY 1 L1

SCALE: 1/4" = 1'-0"

GRAPHIC SCALE(S)

1/4" = 1' - 0" 0 1' 5' 10' 15'

SYM	DESCRIPTION	DATE	APPR

NAVFAC

MYLES M. MICHIBATA LICENSED PROFESSIONAL ARCHITECT No. 12367 HAWAII, U.S.A.
LIC. EXP 04/30/26 SEAL

ASMD LLC.
A/E INFO

APPROVED
Evan Mizel
FOR COMMANDER NAVFAC

ACTIVITY
NATHANIEL PYRON, MILCON PLANNER, DPPH

SATISFACTORY TO DATE 3/10/2026

DES JG / RLB	DRW RLB	CHK JG	
PM/DM			DKS/DMK
BRANCH MANAGER			KYM
CHIEF ENG/ARCH			KYM
FIRE PROTECTION			RYO

DEPARTMENT OF THE NAVY
NAVAL FACILITIES ENGINEERING SYSTEMS COMMAND
NAVFAC PACIFIC
NAVAL FACILITIES ENGINEERING SYSTEMS COMMAND ~ PACIFIC
MAKALAPA, HAWAII
U.S. NAVSUPPACT
MCB CAMP BLAZ, GUAM
JFY 2022 PROJECT J-875
BATTLE STAFF TRAINING FACILITY
INTERIOR ELEVATIONS

SCALE: AS NOTED
EPROJECT NO.: 1696746
CONSTR. CONTR. NO.
NAVFAC DRAWING NO. 17321935
SHEET 139 OF 468
A-405

DRAWFORM REVISION: 25 AUGUST 2020

A-405
3/12/2026 9:12:33 PM
C:\Users\tBaltorse\Documents\BLDG-3875-1696746-A_rhabitionsnF4LVN.rvt

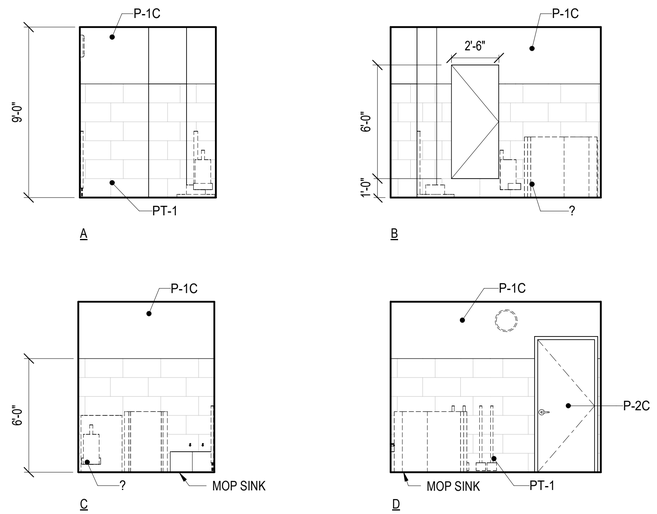

C1 JAN 122

SCALE: 1/4" = 1'-0"

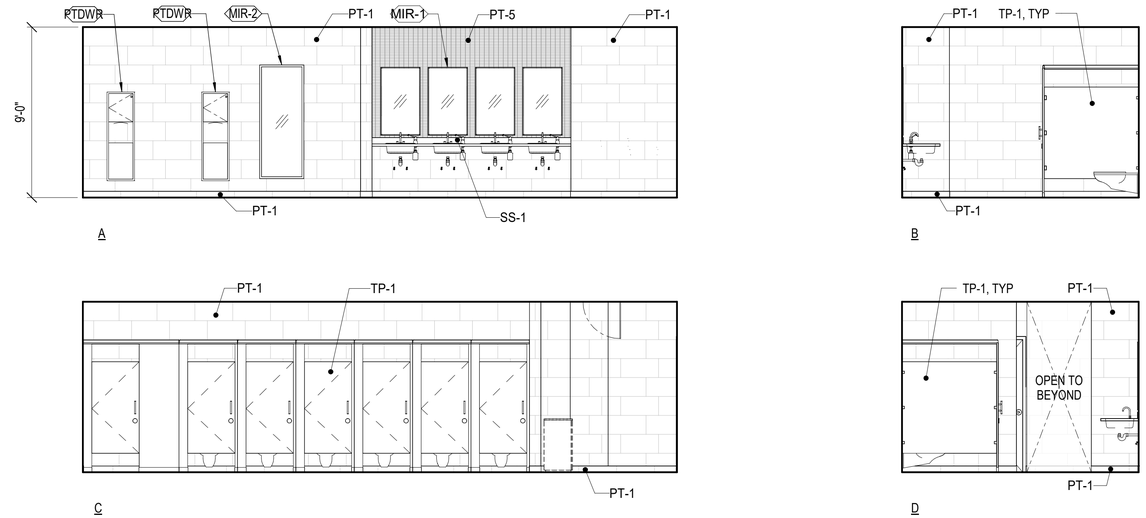

C3 WOMEN 123

SCALE: 1/4" = 1'-0"

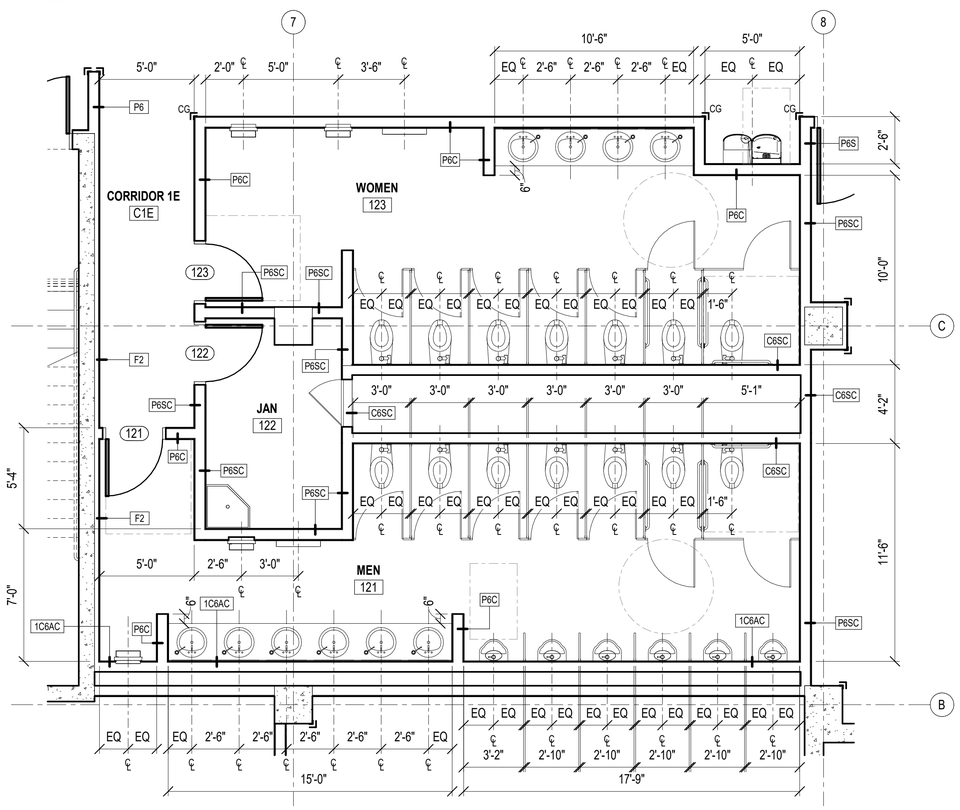

A1 DETAILED FIRST FLOOR RESTROOM PLAN

SCALE: 1/4" = 1'-0" (A-103)

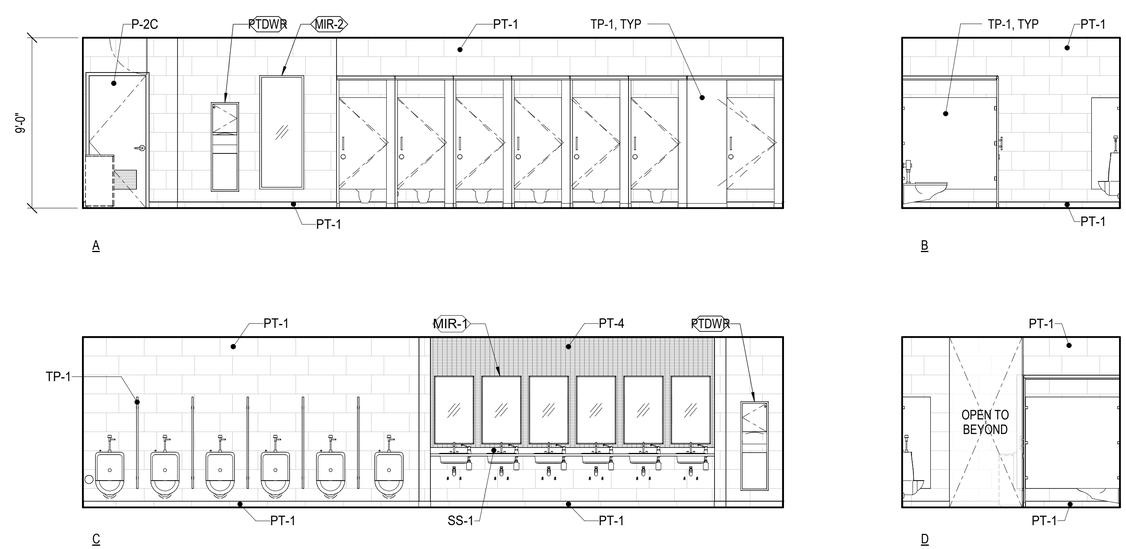

A3 MEN 121

SCALE: 1/4" = 1'-0"

PLAN NORTH

GRAPHIC SCALE(S)

1/4" = 1' - 0" 0 1' 5' 10' 15'

SYM	DESCRIPTION	DATE	APPR

NAVFAC

MYLES M. MICHIBATA LICENSED PROFESSIONAL ARCHITECT No. 12367 HAWAII, U.S.A.
LIC. EXP 04/30/26 SEAL

ASMD LLC. A/E INFO

APPROVED Evan Moyer
FOR COMMANDER NAVFAC

ACTIVITY
NATHANIEL PYRON, MILCON PLANNER, DPPH

SATISFACTORY TO DATE 3/10/2026

DES JG / RLB	DRW RLB	CHK JG	
PM/DM	DKS/DMK		
BRANCH MANAGER	KYM		
CHIEF ENG/ARCH	KYM		
FIRE PROTECTION	RYO		

DEPARTMENT OF THE NAVY
NAVAL FACILITIES ENGINEERING SYSTEMS COMMAND ~ PACIFIC
NAVFAC PACIFIC
U.S. NAVSUPPACT
NAVAL FACILITIES ENGINEERING SYSTEMS COMMAND
MAKALAPA, HAWAII
MCB CAMP BLAZ, GUAM
JFY 2022 PROJECT J-875
BATTLE STAFF TRAINING FACILITY
DETAILED RESTROOM PLANS AND INTERIOR ELEVATIONS

SCALE: AS NOTED
EPROJECT NO.: 1696746
CONSTR. CONTR. NO.
NAVFAC DRAWING NO. 17321936
SHEET 140 OF 468
A-411

DRAWFORM REVISION: 25 AUGUST 2020

A-411
3/12/2026 9:12:36 PM
C:\Users\rlbatterton\Documents\BLDG-875-1696746-A_rbatterton-FALVN.rvt

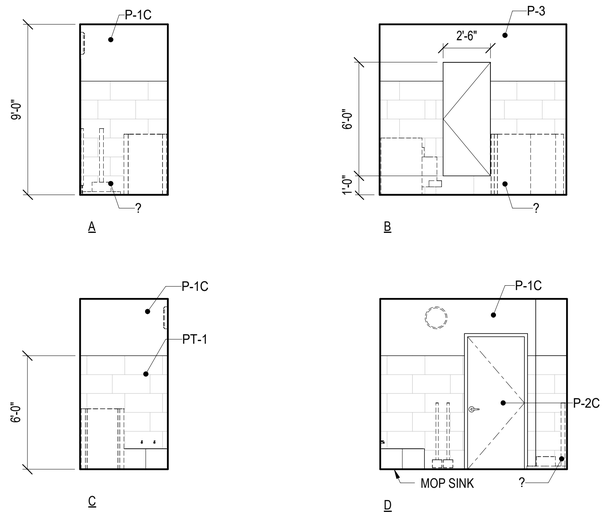

C1 JAN 220

SCALE: 1/4" = 1'-0"

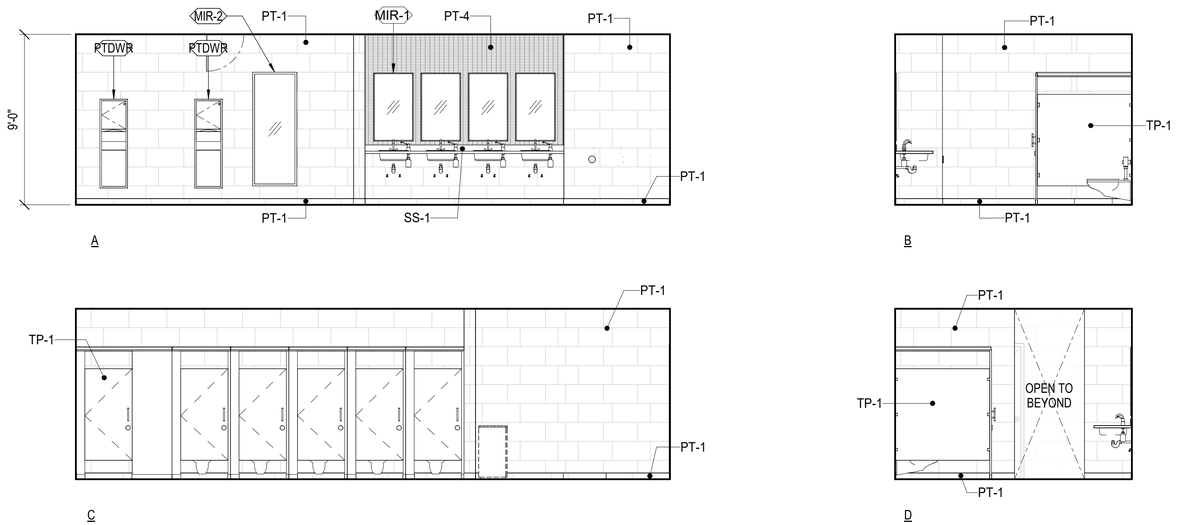

C3 WOMEN 221

SCALE: 1/4" = 1'-0"

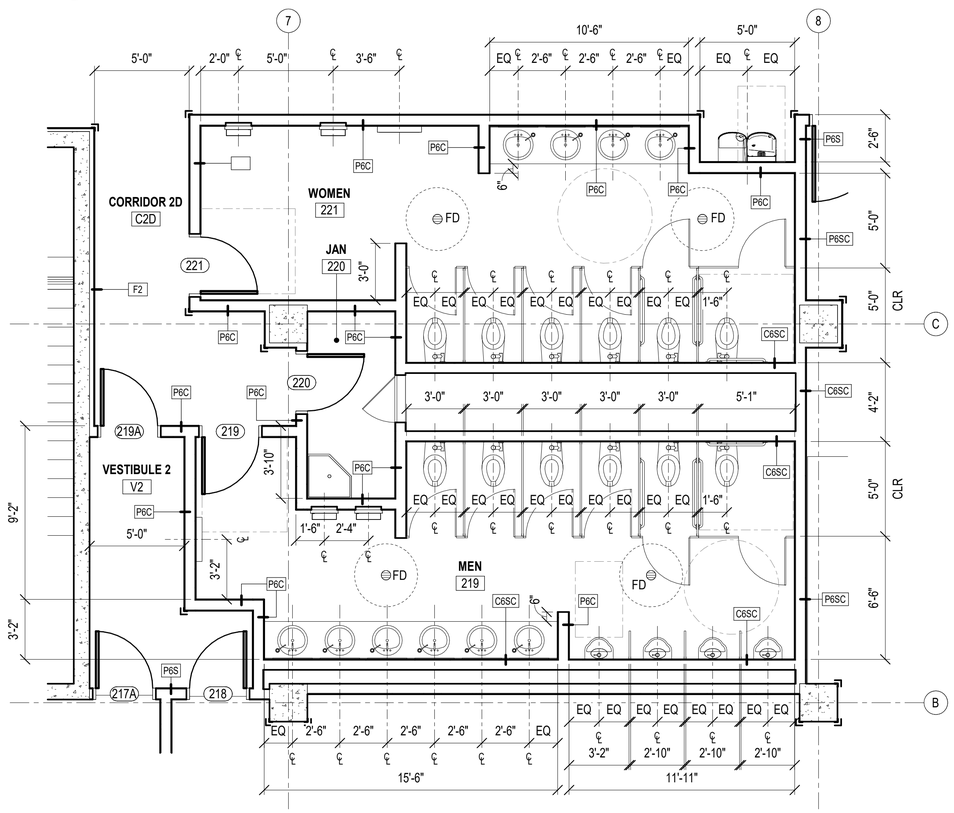

A1 DETAILED SECOND FLOOR RESTROOM PLAN

SCALE: 1/4" = 1'-0" (A-106)

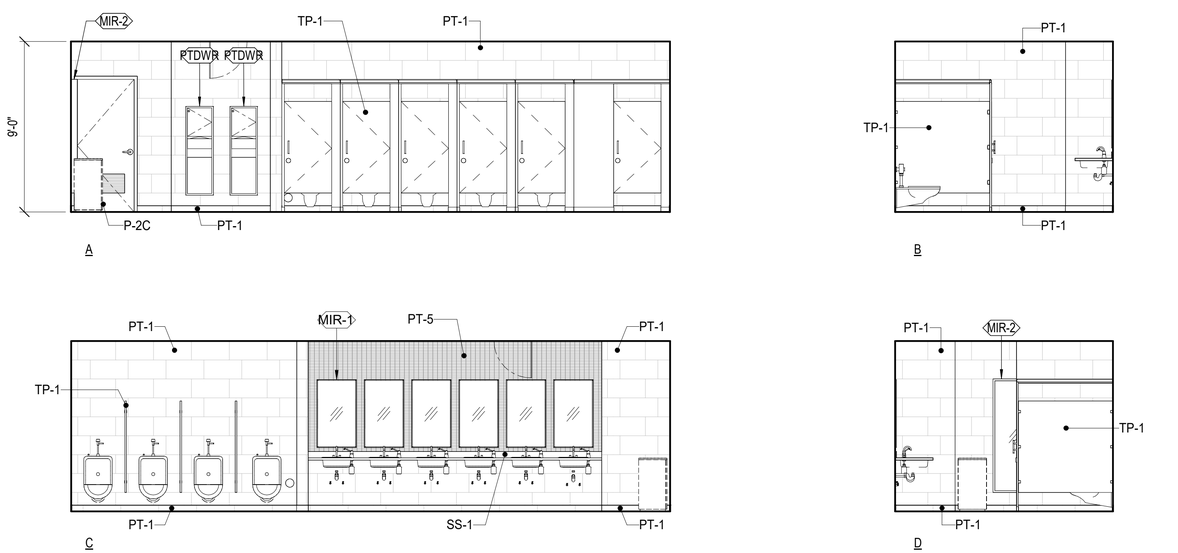

A3 MEN 219

SCALE: 1/4" = 1'-0"

PLAN NORTH

GRAPHIC SCALE(S)

1/4" = 1' - 0" 0 1' 5' 10' 15'

SYM	DESCRIPTION	DATE	APPR

NAVFAC

MYLES M. MICHIBATA LICENSED PROFESSIONAL ARCHITECT No. 12367 HAWAII, U.S.A.
LIC. EXP 04/30/26 SEAL

ASMD LLC. A/E INFO

APPROVED Evan Miyao
FOR COMMANDER NAVFAC

ACTIVITY
NATHANIEL PYRON, MILCON PLANNER, DPPH

SATISFACTORY TO DATE 3/10/2026

DES JG / RLB	DRW RLB	CHK JG	
PM/DM	DKS/DMK		
BRANCH MANAGER	KYM		
CHIEF ENG/ARCH	KYM		
FIRE PROTECTION	RYO		

NAVAL FACILITIES ENGINEERING SYSTEMS COMMAND
DEPARTMENT OF THE NAVY
NAVAL FACILITIES ENGINEERING SYSTEMS COMMAND – PACIFIC
MAKALAPA, HAWAII
NAVFAC PACIFIC
U.S. NAVSUPPACT
MCB CAMP BLAZ, GUAM

JFY 2022 PROJECT J-875
BATTLE STAFF TRAINING FACILITY

DETAILED RESTROOM PLANS AND INTERIOR ELEVATIONS

SCALE: AS NOTED
EPROJECT NO.: 1696746
CONSTR. CONTR. NO.

NAVFAC DRAWING NO. 17321937

SHEET 141 OF 468

A-412

DRAWFORM REVISION: 25 AUGUST 2020

A-412
3/12/2026 9:12:39 PM
C:\Users\Bailmonal\Documents\BLDG-3875-1696746-A_rbaintonsF4LVN.rvt

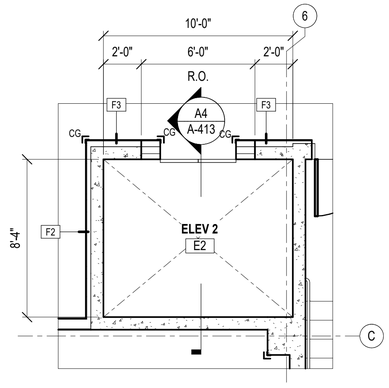

C1 DETAILED SECOND FLOOR ELEVATOR PLAN

SCALE: 1/4" = 1'-0" (A-105)

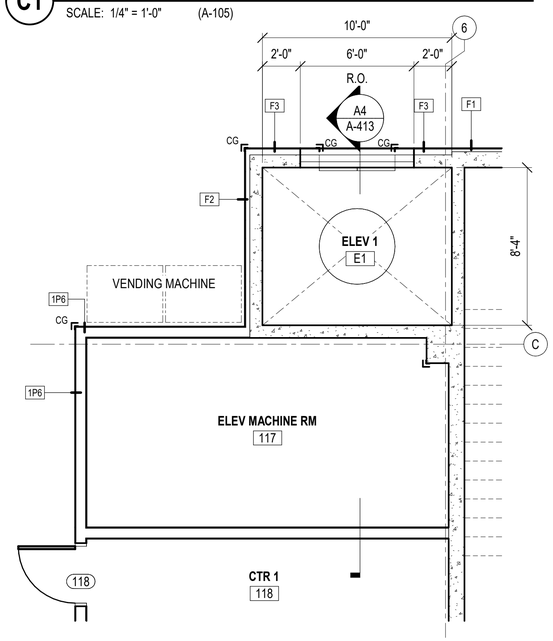

A3 DETAILED FIRST FLOOR ELEVATOR PLAN

SCALE: 1/4" = 1'-0" (A-102)

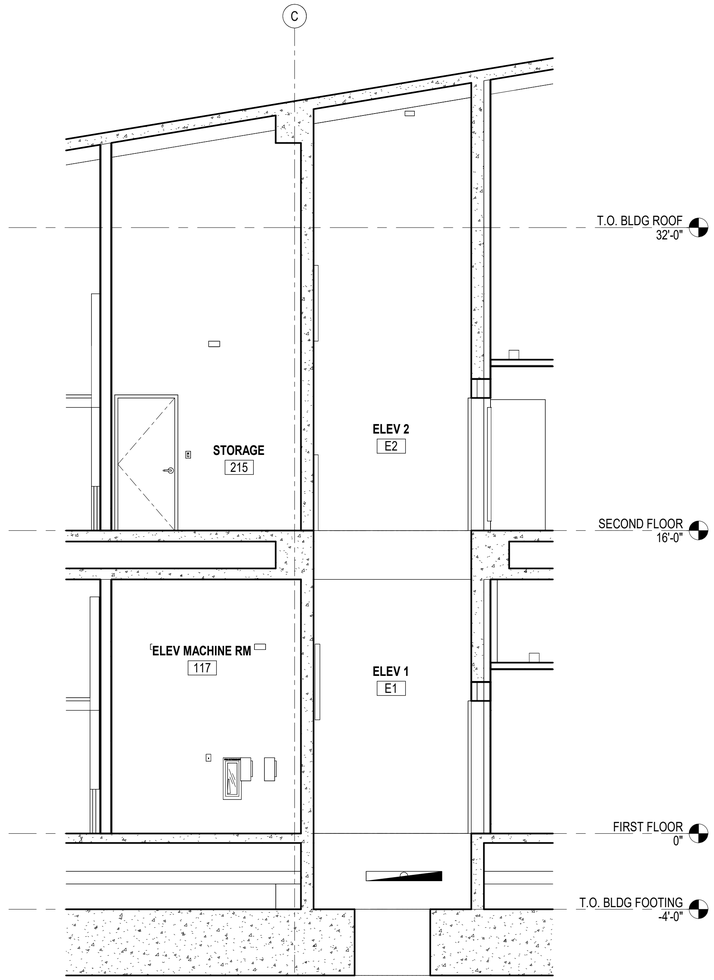

A4 ELEVATOR SECTION

SCALE: 1/4" = 1'-0" (A-413)

GRAPHIC SCALE(S)

1/4" = 1' - 0" 0 1' 5' 10' 15'

SYM	DESCRIPTION	DATE	APPR

NAVFAC

MYLES M. MICHIBATA LICENSED PROFESSIONAL ARCHITECT No. 12367 HAWAII, U.S.A.
LIC. EXP 04/30/26 BEA

ASMD LLC. AE INFO

APPROVED
Evan Mizell
FOR COMMANDER NAVFAC

ACTIVITY
NATHANIEL PYRON, MILCON PLANNER, DPPH

SATISFACTORY TO DATE	3/10/2026
DES JG / RLB DRW RLB CHK	JG
PM/DM	DKS/DMK
BRANCH MANAGER	KYM
CHIEF ENG/ARCH	KYM
FIRE PROTECTION	RYO

DEPARTMENT OF THE NAVY
NAVAL FACILITIES ENGINEERING SYSTEMS COMMAND ~ PACIFIC
NAVFAC PACIFIC
U.S. NAVSUPPACT

NAVAL FACILITIES ENGINEERING SYSTEMS COMMAND
MAKALAPA, HAWAII
MCB CAMP BLAZ, GUAM

JFY 2022 PROJECT J-875
BATTLE STAFF TRAINING FACILITY

DETAILED ELEVATOR PLANS AND SECTION

SCALE: AS NOTED
EPROJECT NO.: 1696746
CONSTR. CONTR. NO.
NAVFAC DRAWING NO. 17321938
SHEET 142 OF 468

A-413

DRAWFORM REVISION: 25 AUGUST 2020

3/12/2026 9:12:40 PM A-413
C:\Users\rlbellitone\Documents\BLDG-875-1696746-A_rblellitoneFALVN.rvt

FLOOR PLAN LEGEND

SYMBOL	DESCRIPTION
	CONC WALL
	PARTITION OR FURRED WALL
X	GRIDLINE
ROOMNAME 101	ROOM NAME AND NUMBER
101	DOOR NUMBER SYMBOL
A1 A-101	SECTION/ELEVATION
P1	PARTITION TYPE, SEE A-502
A1 A-101 SIM	DETAIL REFERENCE

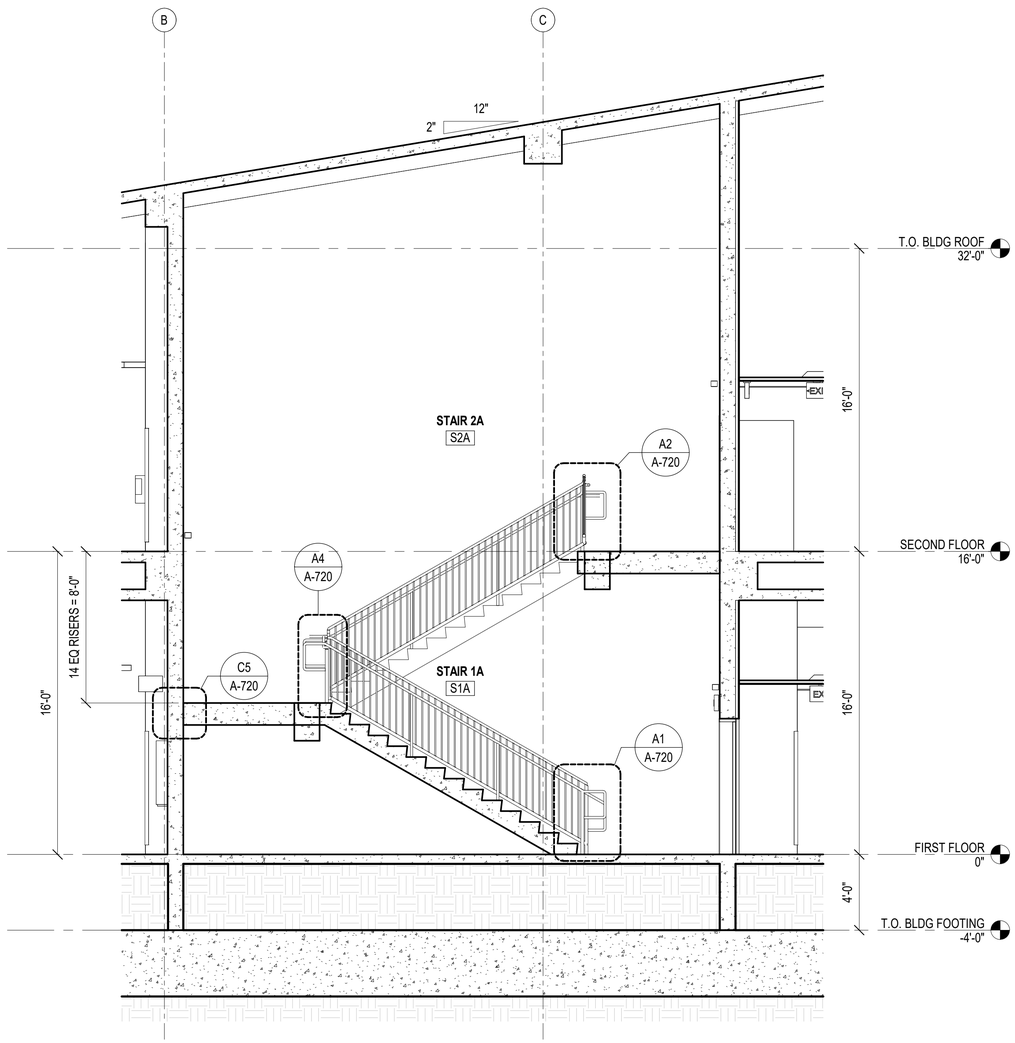

A1 STAIR A SECTION
SCALE: 1/4" = 1'-0" (A-414)

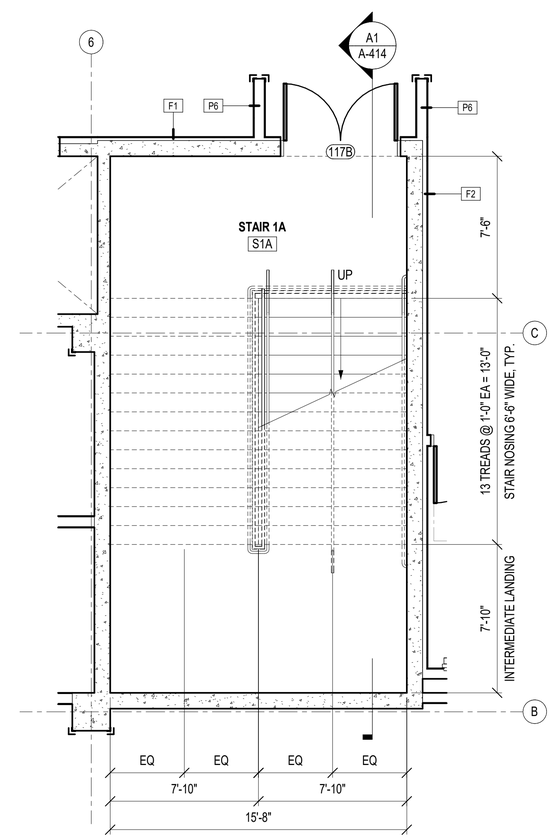

A3 DETAILED STAIR 1A FLOOR PLAN
SCALE: 1/4" = 1'-0" (A-103)

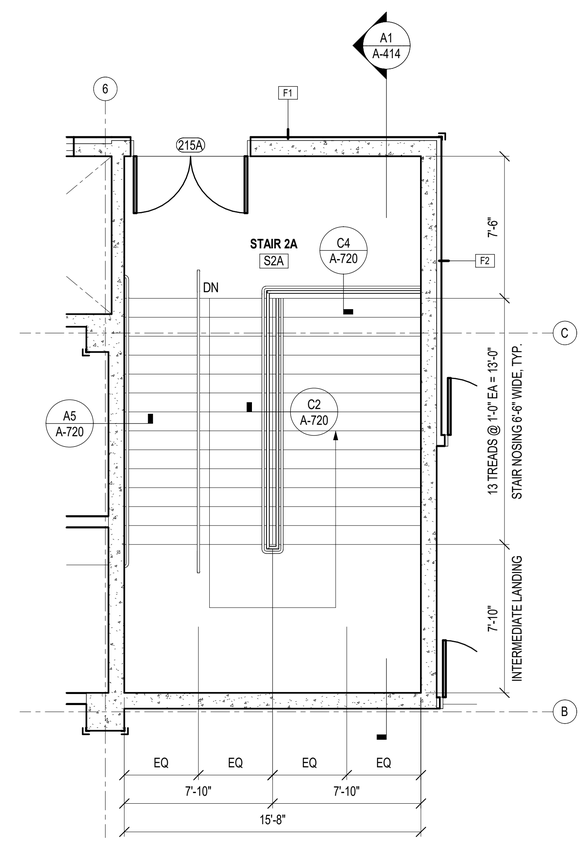

A5 DETAILED STAIR 2A FLOOR PLAN
SCALE: 1/4" = 1'-0" (A-106)

GRAPHIC SCALE(S)
1/4" = 1' - 0" 0 1' 5' 10' 15'

SYM	DESCRIPTION	DATE	APPR

NAVFAC

MYLES M. MICHIBATA LICENSED PROFESSIONAL ARCHITECT No. 12367 HAWAII, U.S.A.
LIC. EXP 04/30/26

ASMD LLC. A/E INFO

APPROVED
FOR COMMANDER NAVFAC

ACTIVITY
NATHANIEL PYRON, MILCON PLANNER, DPPH
SATISFACTORY TO DATE 3/10/2026
DES JG / RLB DRW RLB CHK JG
PM/DM DKS/DMK
BRANCH MANAGER KYM
CHIEF ENG/ARCH KYM
FIRE PROTECTION RYO

DEPARTMENT OF THE NAVY
NAVAL FACILITIES ENGINEERING SYSTEMS COMMAND
NAVFAC PACIFIC
U.S. NAVSUPPACT
NAVAL FACILITIES ENGINEERING SYSTEMS COMMAND ~ PACIFIC
MAKALAPA, HAWAII
MCB CAMP BLAZ, GUAM
JFY 2022 PROJECT J-875
BATTLE STAFF TRAINING FACILITY
DETAILED STAIR A PLANS AND SECTION

SCALE: AS NOTED
EPROJECT NO.: 1696746
CONSTR. CONTR. NO.
NAVFAC DRAWING NO. 17321939
SHEET 143 OF 468
A-414

DRAWFORM REVISION: 25 AUGUST 2020

A-414
3/12/2026 9:12:41 PM
C:\Users\rlbatlrone\Documents\BLDG-8975-1696746-A_rbatlrtonsaFALVN.rvt

FLOOR PLAN LEGEND

SYMBOL	DESCRIPTION
	CONC WALL
	PARTITION OR FURRED WALL
X	GRIDLINE
ROOMNAME 101	ROOM NAME AND NUMBER
101	DOOR NUMBER SYMBOL
A1 A-101	SECTION/ELEVATION
P1	PARTITION TYPE, SEE A-502
A1 A-101 SIM	DETAIL REFERENCE

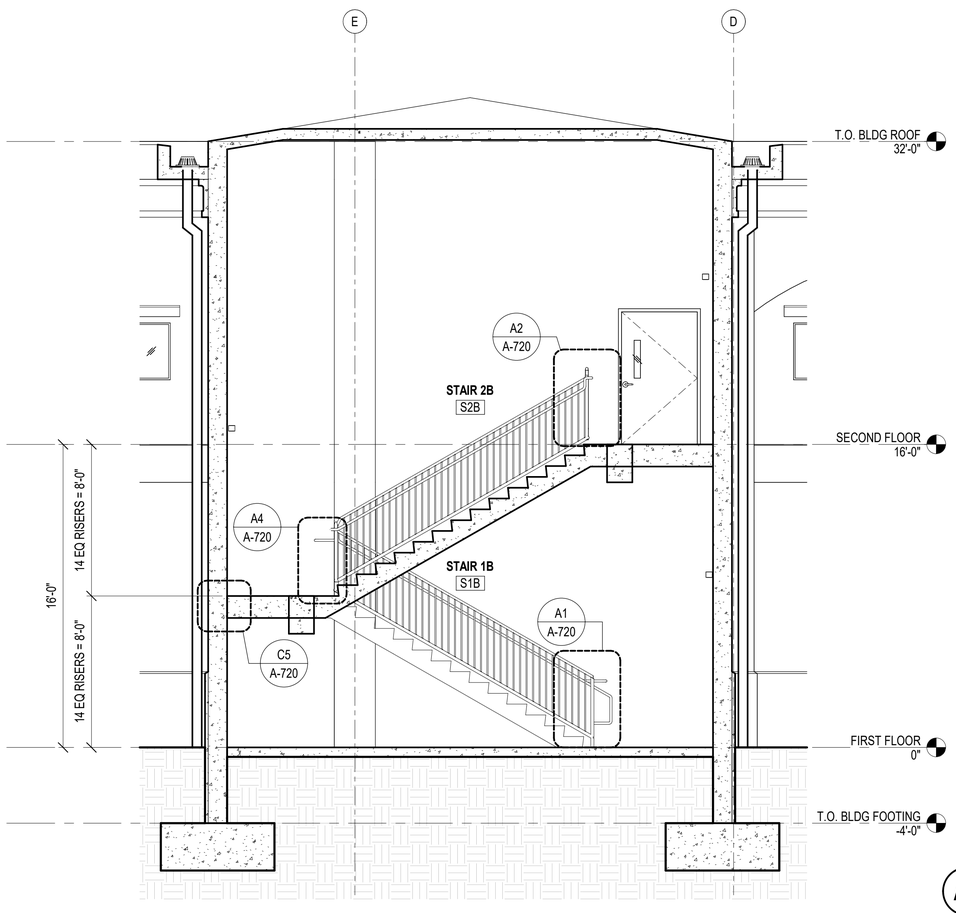

A1 STAIR B SECTION
SCALE: 1/4" = 1'-0" (A-415)

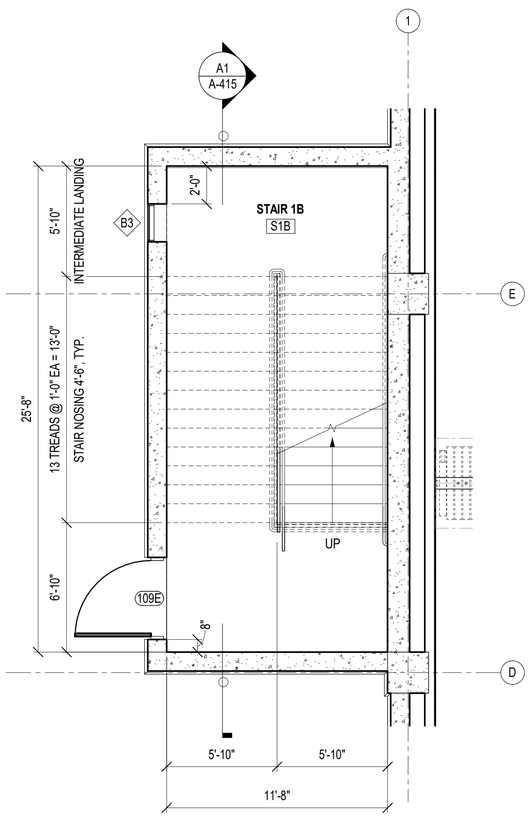

A3 DETAILED STAIR 1B FLOOR PLAN
SCALE: 1/4" = 1'-0" (A-102)

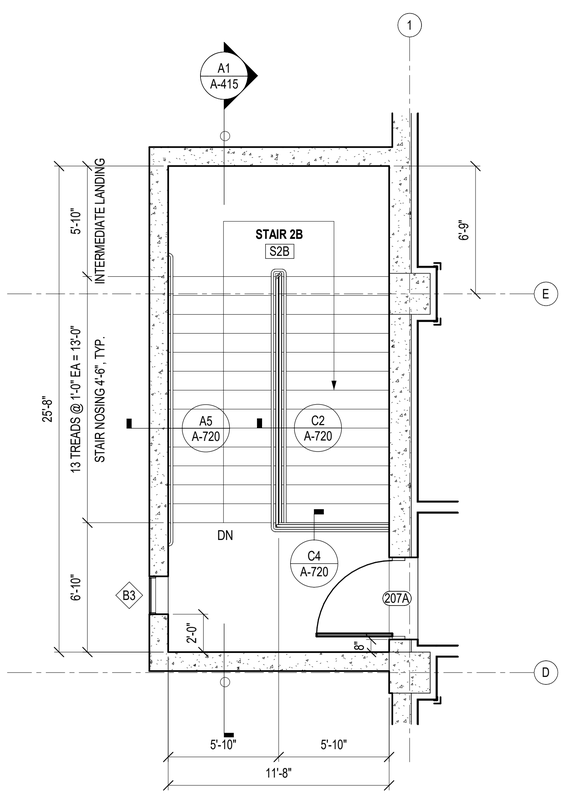

A4 DETAILED STAIR 2B FLOOR PLAN
SCALE: 1/4" = 1'-0" (A-105)

GRAPHIC SCALE(S)

1/4" = 1' - 0" 0 1' 5' 10' 15'

SYM	DESCRIPTION	DATE	APPR

NAVFAC

MYLES M. MICHIBATA LICENSED PROFESSIONAL ARCHITECT No. 12367 HAWAII, U.S.A.
LIC. EXP 04/30/26

ASMD LLC. AE INFO

APPROVED
FOR COMMANDER NAVFAC

ACTIVITY
NATHANIEL PYRON, MILCON PLANNER, DPPH

SATISFACTORY TO DATE	3/10/2026
DES JG / RLB DRW RLB	CHK JG
PM/DM	DKS/DMK
BRANCH MANAGER	KYM
CHIEF ENG/ARCH	KYM
FIRE PROTECTION	RYO

DEPARTMENT OF THE NAVY
NAVAL FACILITIES ENGINEERING SYSTEMS COMMAND
NAVFAC PACIFIC
U.S. NAVSUPPACT

NAVAL FACILITIES ENGINEERING SYSTEMS COMMAND ~ PACIFIC
MAKALAPA, HAWAII
MCB CAMP BLAZ, GUAM

JFY 2022 PROJECT J-875
BATTLE STAFF TRAINING FACILITY

DETAILED STAIR B PLANS AND SECTION

SCALE: AS NOTED
EPROJECT NO.: 1696746
CONSTR. CONTR. NO.
NAVFAC DRAWING NO. 17321940
SHEET 144 OF 468
A-415

DRAWFORM REVISION: 25 AUGUST 2020

3/12/2026 9:12:42 PM A-415
C:\Users\rlb\Autodesk Documents\BLDG-875-1696746-A_Traditional\Traditional-FaLVN.rvt

FLOOR PLAN LEGEND

SYMBOL	DESCRIPTION
	CONC WALL
	PARTITION OR FURRED WALL
X	GRIDLINE
ROOMNAME 101	ROOM NAME AND NUMBER
101	DOOR NUMBER SYMBOL
A1 A-101	SECTION/ELEVATION
P1	PARTITION TYPE, SEE A-502
A1 A-101 SIM	DETAIL REFERENCE

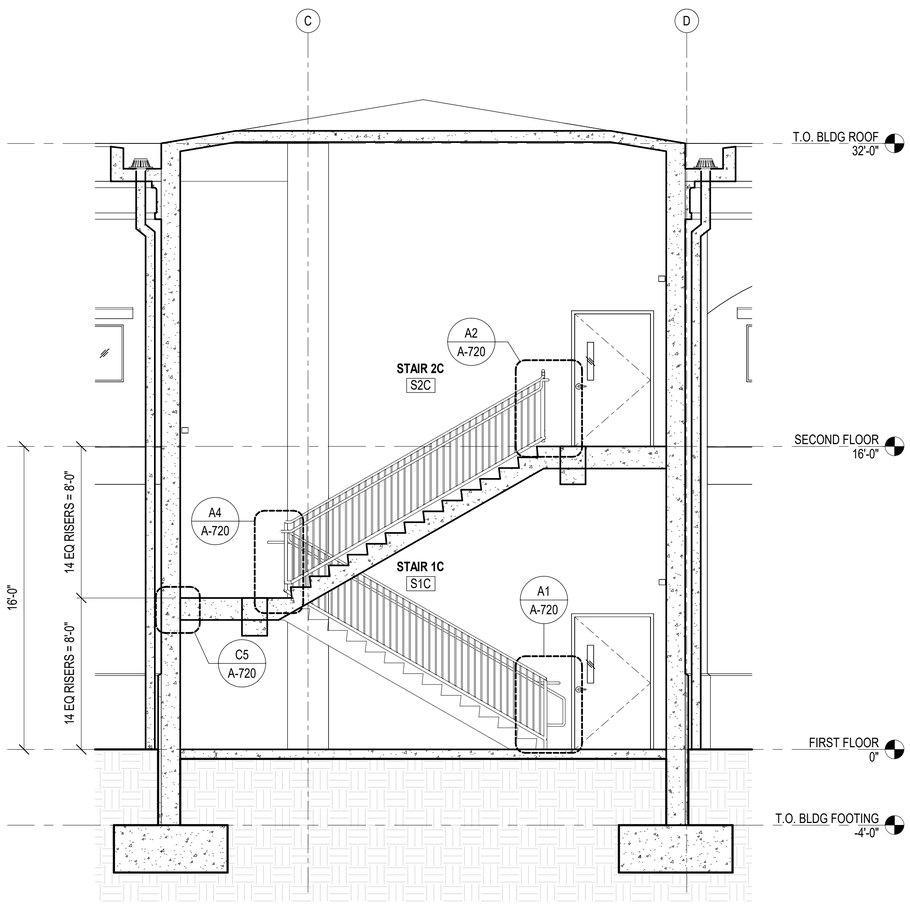

A1 STAIR C SECTION
SCALE: 1/4" = 1'-0" (A-416)

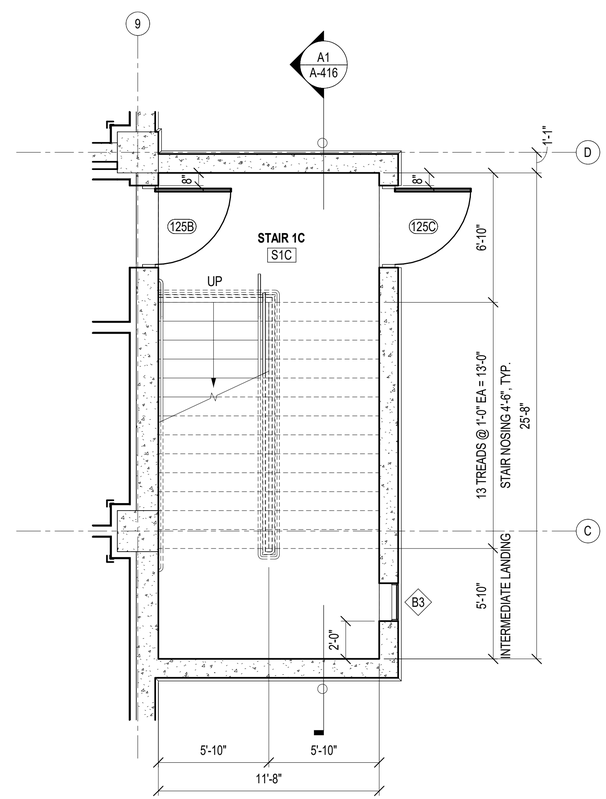

A3 DETAILED STAIR 1C FLOOR PLAN
SCALE: 1/4" = 1'-0" (A-103)

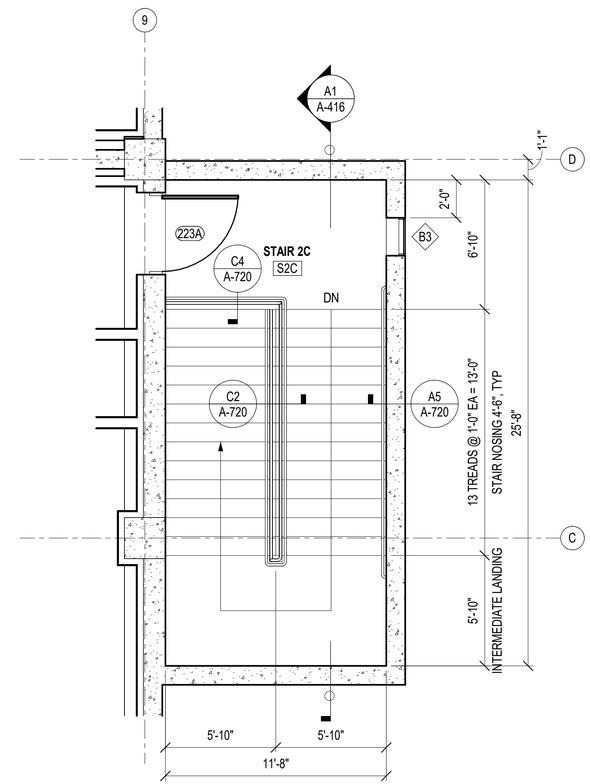

A5 DETAILED STAIR 2C FLOOR PLAN
SCALE: 1/4" = 1'-0" (A-106)

GRAPHIC SCALE(S)
1/4" = 1' - 0" 0 1' 5' 10' 15'

SYM	DESCRIPTION	DATE	APPR

NAVFAC

MYLES M. MICHIBATA LICENSED PROFESSIONAL ARCHITECT No. 12367 HAWAII, U.S.A.
LIC. EXP 04/30/26

ASMD LLC.
AE INFO

APPROVED
FOR COMMANDER NAVFAC
ACTIVITY
NATHANIEL PYRON, MILCON PLANNER, DPPH
SATISFACTORY TO DATE 3/10/2026
DES JG / RLB DRW RLB CHK JG
PM/DM DKS/DMK
BRANCH MANAGER KYM
CHIEF ENG/ARCH KYM
FIRE PROTECTION RYO

DEPARTMENT OF THE NAVY
NAVAL FACILITIES ENGINEERING COMMAND
NAVFAC PACIFIC
U.S. NAVSUPPACT
NAVAL FACILITIES ENGINEERING SYSTEMS COMMAND – PACIFIC
MAKALAPA, HAWAII
MCB CAMP BLAZ, GUAM
JFY 2022 PROJECT J-875
BATTLE STAFF TRAINING FACILITY
DETAILED STAIR C PLANS AND SECTION

SCALE: AS NOTED
EPROJECT NO.: 1696746
CONSTR. CONTR. NO.
NAVFAC DRAWING NO. 17321941
SHEET 145 OF 468
A-416
DRAWFORM REVISION: 25 AUGUST 2020

A-416
3/12/2026 9:12:43 PM
C:\Users\BillMonaco\Documents\BLDG-3875-1696746-A_chabintonsF4LVN.rvt

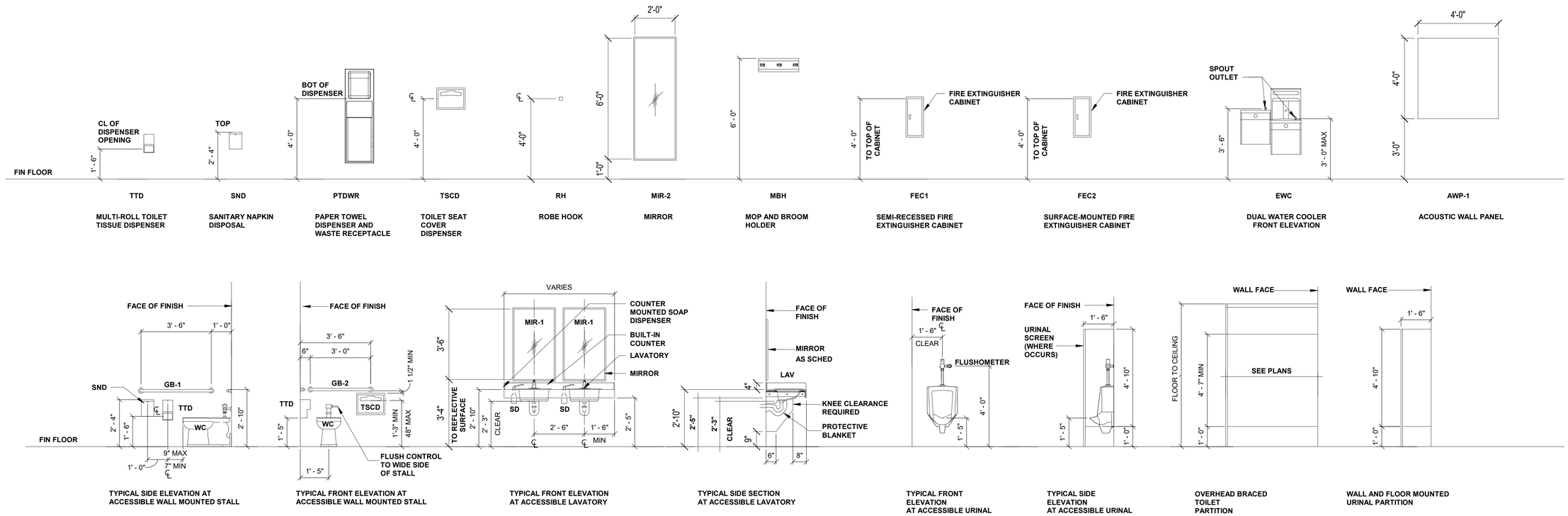

A1 TYPICAL MOUNTING HEIGHT

SCALE: 3/8" = 1'-0"

GRAPHIC SCALE(S)

3/8" = 1' - 0" 0 1' 2' 3' 4' 5' 10'

SYM	DESCRIPTION	DATE	APPR

NAVFAC

MYLES M. MICHIBATA LICENSED PROFESSIONAL ARCHITECT No. 12367 HAWAII, U.S.A.

LIC. EXP 04/30/26 SEAL

ASMD LLC. A/E INFO

APPROVED Evan Miyazal

FOR COMMANDER NAVFAC

ACTIVITY: NATHANIEL PYRON, MILCON PLANNER, DPPH

SATISFACTORY TO DATE: 3/10/2026

DES: JG / RLB DRW: RLB CHK: JG

PM/DM: DKS/DMK

BRANCH MANAGER: KYM

CHIEF ENG/ARCH: KYM

FIRE PROTECTION: RYO

DEPARTMENT OF THE NAVY
NAVAL FACILITIES ENGINEERING SYSTEMS COMMAND
NAVFAC PACIFIC
U.S. NAVSUPPACT

NAVAL FACILITIES ENGINEERING SYSTEMS COMMAND ~ PACIFIC
MAKALAPA, HAWAII

MCB CAMP BLAZ, GUAM

JFY 2022 PROJECT J-875
BATTLE STAFF TRAINING FACILITY

TYPICAL MOUNTING HEIGHTS

SCALE: AS NOTED

EPROJECT NO.: 1696746

CONSTR. CONTR. NO.

NAVFAC DRAWING NO. 17321942

SHEET 146 OF 468

A-501

DRAWFORM REVISION: 25 AUGUST 2020

3/12/2026 9:12:44 PM A-501
C:\Users\tbaltorsal\Documents\BLDG-875-1696746-A_rbaltrosnaFE4LVN.rvt

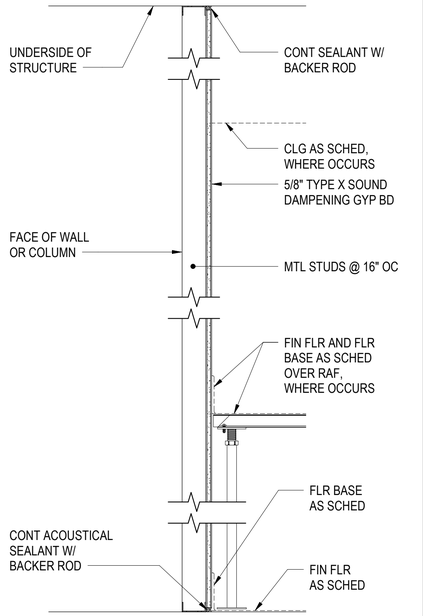

F1
F2
F3
F6

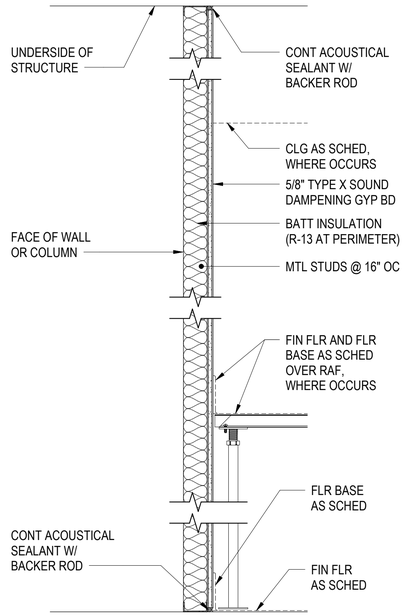

F2A
F3A
F6A

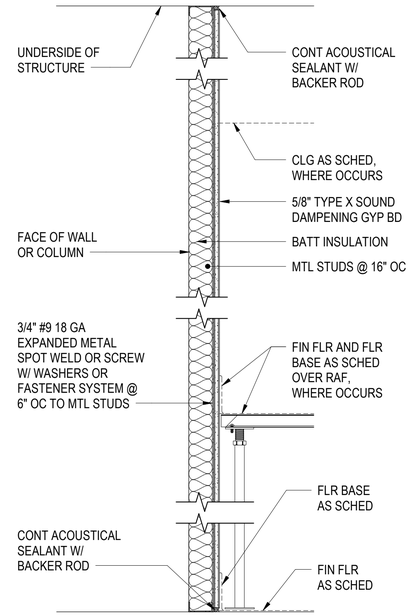

F2AM
F3AM
F6AM

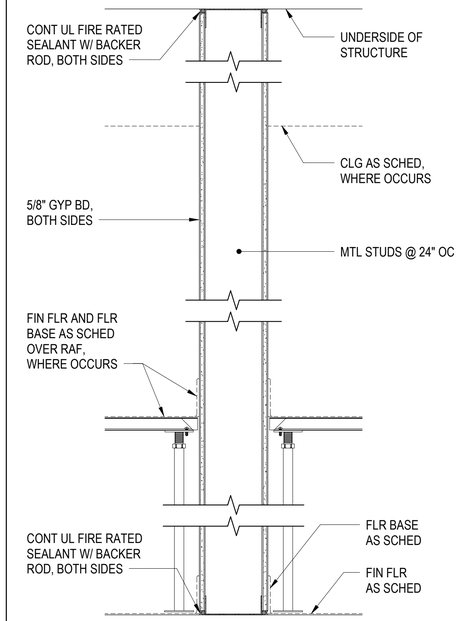

1P6
P6
P6S

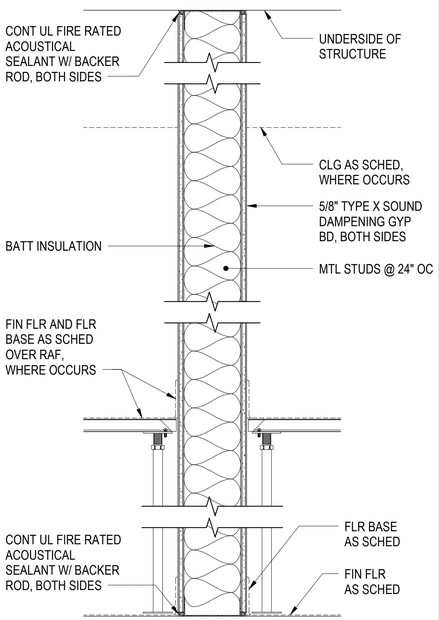

1P6A
P6A
P6AS

STC 50 (UL DESIGN NO. U465)

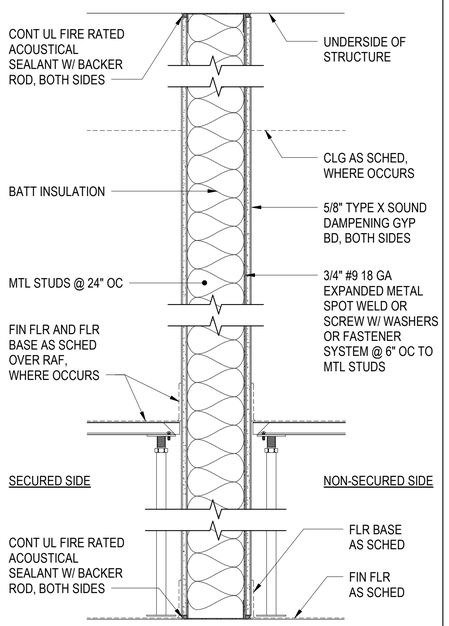

1P6AM
P6AM
P6ASM

STC 50 (UL DESIGN NO. U465)

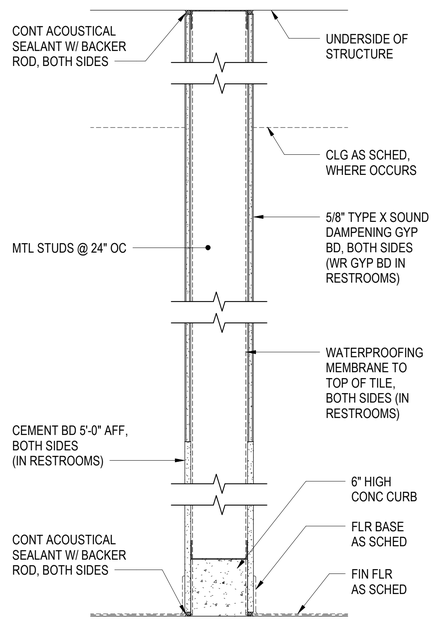

P6C
P6SC

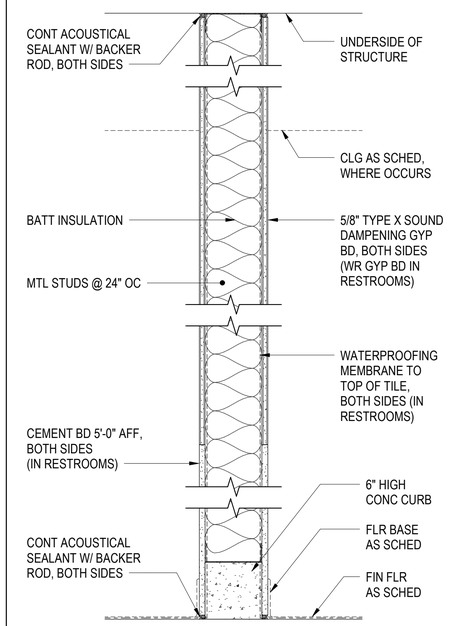

P6AC
P6ASC

STC 50

GENERAL SHEET NOTES

1. GYPSUM BOARD IS TYPE 'X', 5/8" THICK UNLESS OTHERWISE NOTED.
2. STAGGER JOINTS ON MULTIPLE LAYERS OF GYPSUM BOARD.
3. ATTACH MULTIPLE LAYERS OF GYPSUM BOARD WITH SCREWS, DO NOT USE ADHESIVE TAPE AND SEAL JOINTS PRIOR TO INSTALLING THE NEXT LAYER.
4. AT ACOUSTICALLY RATED PARTITIONS THAT RECEIVE TILE, REPLACE STANDARD GYPSUM BOARD WITH GLASS-MAT FACED TILE BACKER BOARD.
5. PARTITIONS MUST EXTEND FULL HEIGHT TO THE UNDERSIDE OF THE STRUCTURE TO ACHIEVE STC VALUES.
6. PENETRATIONS OF THE WALL SHALL BE SEALED AIRTIGHT AT FLOOR, SIDES, CEILING, AND ON BOTH SIDES WITH ACOUSTICAL NON-HARDENING SEALANT. PACK LARGER GAPS WITH MINERAL WOOL INSULATION AND SEAL AIRTIGHT WITH CAULK.
7. WALL OUTLETS FOR DATA, VOICE, VIDEO, POWER, OR OTHER UTILITIES SHALL BE SEPARATED BY AT LEAST ONE STUD CAVITY. FOR JUNCTION BOXES LOCATED IN THE SAME STUD CAVITY MOUNTED ON OPPOSITE SIDES OF THE WALL, SEAL WITH PUTTY PADS ON BACK AND SIDES AND SEAL FRONT WITH NON-HARDENINGCAULK. AVOID BACK-TO-BACK OUTLETS.
8. ELECTRICAL PANELS BOARDS, FIRE EXTINGUISHER CABINETS, OR OTHER SIMILAR RECESSED ELEMENTS SHALL BE WRAPPED WITH GYPSUM BOARD AND ALL GAPS SEALED WITH NON-HARDENING CAULK.
9. PIPING AND DUCTS SHALL NOT CONTACT FRAMING OR GYPSUM BOARD.
10. SINGLE STUD PARTITIONS:
    a. METAL STUD GAUGE/THICKNESS AND STUD SPACING IS CRITICAL FOR ACOUSTICAL PERFORMACE. WHERE HEAVIER STUDS OR NARROWER SPACING IS USED, ADJUSTMENTS TO THE NUMBER OF GYPSUM BOARD LAYERS OR RESILIENT CONNECTION TO STUDS MAY BE NEEDED TO ACHIEVE THE REQUIRED ACOUSTICAL RATINGS.
11. DOUBLE STUD ASSEMBLIES:
    a. PROVIDE A MINIMUM 1-INCH AIRSPACE BETWEEN THE TWO STUD ROWS.
    b. NO ELEMENTS SHALL BRIDGE OR RIGIDLY CONNECT THE TWO STUD ROWS TOGETHER IN A DUAL-STUD ASSEMBLY. BRIDGING ELEMENTS INCLUDE PIPING, CONDUIT, CROSS-BRACING, LATERAL BRACING, AND GUSSETS.
12. HOLLOW METAL ACOUSTICAL DOOR AND WINDOW FRAMES SHALL BE PACKED FULL WITH MINERAL WOOL OR GROUT.
13. REFER TO SPECIFICATION SECTION 09 22 00 FOR METAL STUD GAUGES.

PARTITION LEGEND

CONSTRUCTION TYPE — STUD SIZE CODE
WALL FIRE RATING — 1P6A — MODIFICATION(S)

WALL FIRE RATING

1	1 HOUR

NOTE: BLANK INDICATES NO FIRE RATING

CONSTRUCTION TYPE

F	FURRING
P	BASIC PARTITION
C	CHASE WALL
WM	WIRE MESH

STUD SIZE CODE

1	1-5/8" METAL STUDS
2	2-1/2" METAL STUDS
3	3-5/8" METAL STUDS
6	6" METAL STUDS

NOTE: BLANK INDICATES NO STUD SIZE CODE

MODIFICATION(S)

A	ACOUSTIC RATED
C	W/ CONC CURB
AC	ACOUSTIC RATED W/ CONC CURB
AS	ACOUSTIC AND SMOKE RATED
ASC	ACOUSTIC AND SMOKE RATED W/ CONC CURB
S	SMOKE RATED
SC	SMOKE RATED W/ CONC CURB
AM	ACOUSTIC RATED W/ SECURITY MESH
ASM	ACOUSTIC AND SMOKE RATED W/ SECURITY MESH

NOTE: BLANK INDICATES NO MODIFICATION(S)

GRAPHIC SCALE(S)

1 1/2" = 1' - 0" 0 3" 6" 9" 1' 2'

SYM	DESCRIPTION	DATE	APPR

NAVFAC

MYLES M. MICHIBATA — LICENSED PROFESSIONAL ARCHITECT — No. 12367 — HAWAII, U.S.A.
LIC. EXP 04/30/26 SEAL

AS MD LLC. A/E INFO

APPROVED
Evan Mizuno
FOR COMMANDER NAVFAC

ACTIVITY
NATHANIEL PYRON, MILCON PLANNER, DPPH
SATISFACTORY TO DATE 3/10/2026
DES JG / RLB DRW RLB CHK JG
PM/DM DKS/DMK
BRANCH MANAGER KYM
CHIEF ENG/ARCH KYM
FIRE PROTECTION RYO

DEPARTMENT OF THE NAVY
NAVAL FACILITIES ENGINEERING SYSTEMS COMMAND ~ PACIFIC
NAVFAC PACIFIC
NAVAL FACILITIES ENGINEERING SYSTEMS COMMAND
MAKALAPA, HAWAII
U.S. NAVSUPPACT
MCB CAMP BLAZ, GUAM
JFY 2022 PROJECT J-875
BATTLE STAFF TRAINING FACILITY
PARTITION TYPES

SCALE: AS NOTED
EPROJECT NO.: 1696746
CONSTR. CONTR. NO.
NAVFAC DRAWING NO. 17321943
SHEET 147 OF 468
A-502

DRAWFORM REVISION: 25 AUGUST 2020

A-502
3/12/2026 9:12:45 PM
C:\Users\rbattenor\Documents\BLDG-875-1696746-A_rbattenorF4LVN.rvt

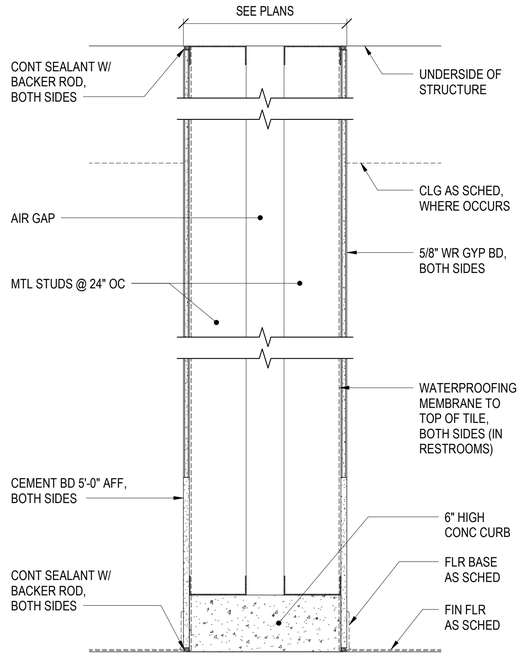

C6SC

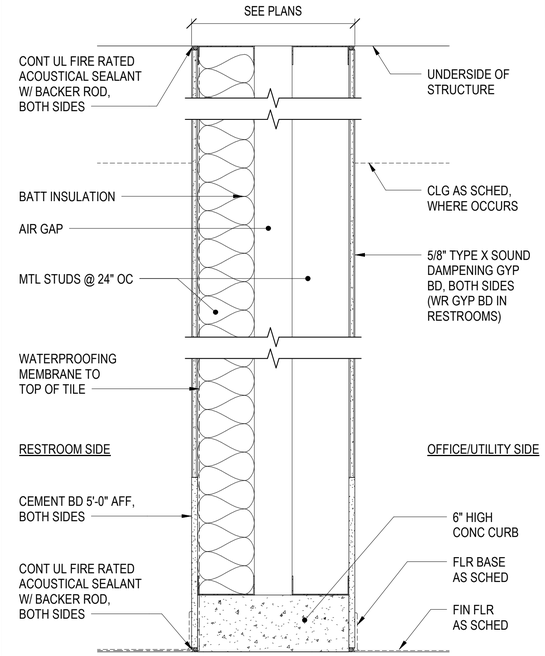

1C6AC

STC 50
(UL DESIGN NO. U493)

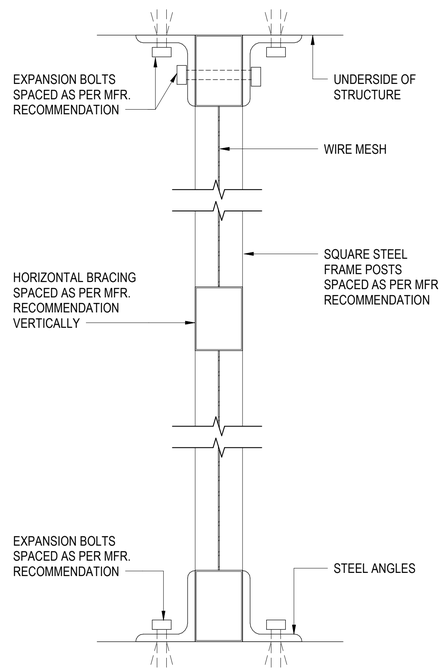

WM

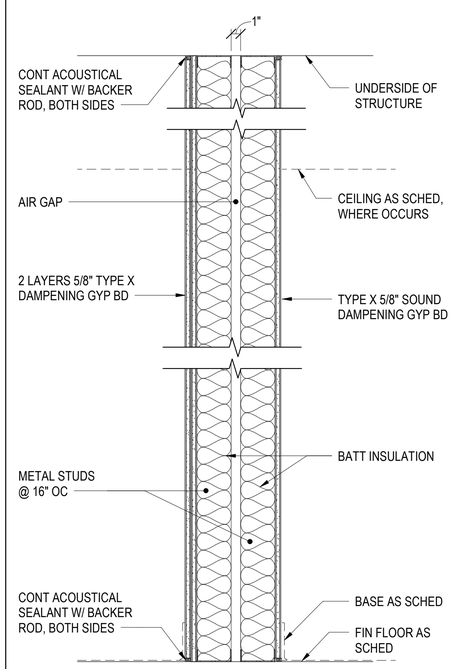

C3AS

STC 60

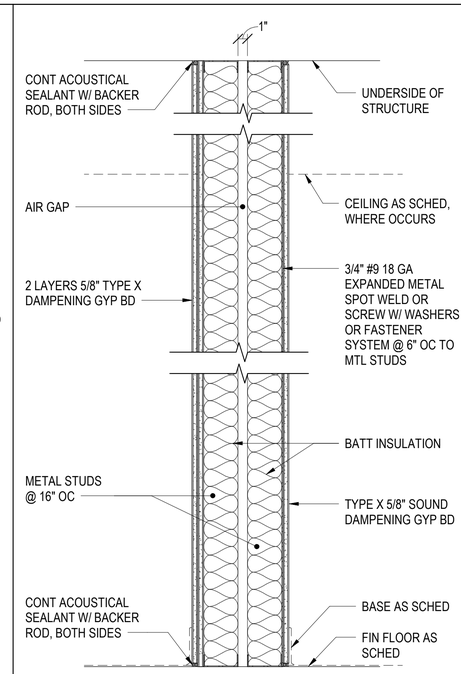

C3AM

STC 60

GENERAL SHEET NOTES

1. GYPSUM BOARD IS TYPE 'X', 5/8" THICK UNLESS OTHERWISE NOTED.
2. STAGGER JOINTS ON MULTIPLE LAYERS OF GYPSUM BOARD.
3. ATTACH MULTIPLE LAYERS OF GYPSUM BOARD WITH SCREWS, DO NOT USE ADHESIVE TAPE AND SEAL JOINTS PRIOR TO INSTALLING THE NEXT LAYER.
4. AT ACOUSTICALLY RATED PARTITIONS THAT RECEIVE TILE, REPLACE STANDARD GYPSUM BOARD WITH GLASS-MAT FACED TILE BACKER BOARD.
5. PARTITIONS MUST EXTEND FULL HEIGHT TO THE UNDERSIDE OF THE STRUCTURE TO ACHIEVE STC VALUES.
6. PENETRATIONS OF THE WALL SHALL BE SEALED AIRTIGHT AT FLOOR, SIDES, CEILING, AND ON BOTH SIDES WITH ACOUSTICAL NON-HARDENING SEALANT. PACK LARGER GAPS WITH MINERAL WOOL INSULATION AND SEAL AIRTIGHT WITH CAULK.
7. WALL OUTLETS FOR DATA, VOICE, VIDEO, POWER, OR OTHER UTILITIES SHALL BE SEPARATED BY AT LEAST ONE STUD CAVITY. FOR JUNCTION BOXES LOCATED IN THE SAME STUD CAVITY MOUNTED ON OPPOSITE SIDES OF THE WALL, SEAL WITH PUTTY PADS ON BACK AND SIDES AND SEAL FRONT WITH NON-HARDENINGCAULK. AVOID BACK-TO-BACK OUTLETS.
8. ELECTRICAL PANELS BOARDS, FIRE EXTINGUISHER CABINETS, OR OTHER SIMILAR RECESSED ELEMENTS SHALL BE WRAPPED WITH GYPSUM BOARD AND ALL GAPS SEALED WITH NON-HARDENING CAULK.
9. PIPING AND DUCTS SHALL NOT CONTACT FRAMING OR GYPSUM BOARD.
10. SINGLE STUD PARTITIONS:
    a. METAL STUD GAUGE/THICKNESS AND STUD SPACING IS CRITICAL FOR ACOUSTICAL PERFORMACE. WHERE HEAVIER STUDS OR NARROWER SPACING IS USED, ADJUSTMENTS TO THE NUMBER OF GYPSUM BOARD LAYERS OR RESILIENT CONNECTION TO STUDS MAY BE NEEDED TO ACHIEVE THE REQUIRED ACOUSTICAL RATINGS.
11. DOUBLE STUD ASSEMBLIES:
    a. PROVIDE A MINIMUM 1-INCH AIRSPACE BETWEEN THE TWO STUD ROWS.
    b. NO ELEMENTS SHALL BRIDGE OR RIGIDLY CONNECT THE TWO STUD ROWS TOGETHER IN A DUAL-STUD ASSEMBLY. BRIDGING ELEMENTS INCLUDE PIPING, CONDUIT, CROSS-BRACING, LATERAL BRACING, AND GUSSETS.
12. HOLLOW METAL ACOUSTICAL DOOR AND WINDOW FRAMES SHALL BE PACKED FULL WITH MINERAL WOOL OR GROUT.
13. REFER TO SPECIFICATION SECTION 09 22 00 FOR METAL STUD GAUGES.

PARTITION LEGEND

CONSTRUCTION TYPE — STUD SIZE CODE
WALL FIRE RATING — F P 6 A — MODIFICATION(S)

WALL FIRE RATING

1	1 HOUR

NOTE: BLANK INDICATES NO FIRE RATING

CONSTRUCTION TYPE

F	FURRING
P	BASIC PARTITION
C	CHASE WALL
WM	WIRE MESH

STUD SIZE CODE

1	1-5/8" METAL STUDS
2	2-1/2" METAL STUDS
3	3-5/8" METAL STUDS
6	6" METAL STUDS

NOTE: BLANK INDICATES NO STUD SIZE CODE

MODIFICATION(S)

A	ACOUSTIC RATED
C	W/ CONC CURB
AC	ACOUSTIC RATED W/ CONC CURB
AS	ACOUSTIC AND SMOKE RATED
ASC	ACOUSTIC AND SMOKE RATED W/ CONC CURB
S	SMOKE RATED
SC	SMOKE RATED W/ CONC CURB
AM	ACOUSTIC RATED W/ SECURITY MESH
ASM	ACOUSTIC AND SMOKE RATED W/ SECURITY MESH

NOTE: BLANK INDICATES NO MODIFICATION(S)

GRAPHIC SCALE(S)

1 1/2" = 1' - 0" 0 3" 6" 9" 1' 2'

SYM	DESCRIPTION	DATE	APPR

NAVFAC

MYLES M. MICHIBATA LICENSED PROFESSIONAL ARCHITECT No. 12367 HAWAII, U.S.A.
LIC. EXP 04/30/26 SEAL

AS MD LLC. A/E INFO

APPROVED
Evan Miyazaki
FOR COMMANDER NAVFAC
ACTIVITY
NATHANIEL PYRON, MILCON PLANNER, DPPH
SATISFACTORY TO DATE 3/10/2026
DES JG / RLB DRW RLB CHK JG
PMDM DKS/DMK
BRANCH MANAGER KYM
CHIEF ENG/ARCH KYM
FIRE PROTECTION RYO

DEPARTMENT OF THE NAVY
NAVAL FACILITIES ENGINEERING SYSTEMS COMMAND
NAVFAC PACIFIC
U.S. NAVSUPPACT
NAVAL FACILITIES ENGINEERING SYSTEMS COMMAND ~ PACIFIC
MAKALAPA, HAWAII
MCB CAMP BLAZ, GUAM
JFY 2022 PROJECT J-875
BATTLE STAFF TRAINING FACILITY
PARTITION TYPES

SCALE: AS NOTED
EPROJECT NO.: 1696746
CONSTR. CONTR. NO.
NAVFAC DRAWING NO. 17321944
SHEET 148 OF 468
A-503

DRAWFORM REVISION: 25 AUGUST 2020

3/12/2026 11:35:52 PM A-503
C:\Users\BlairtonJ\Documents\BLDG-875-1696746-A_rbalintonsFALVN.rvt

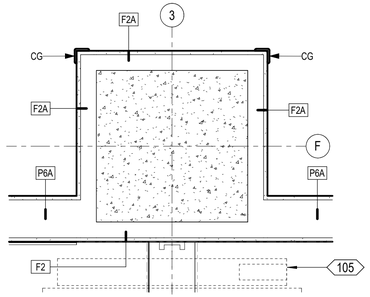

D1 COLUMN DETAIL
SCALE: 1" = 1'-0" (A-102)

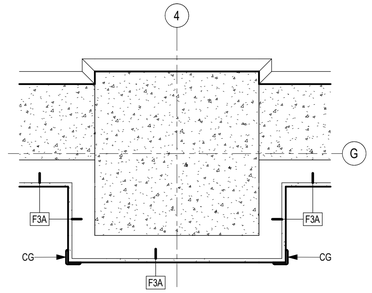

D2 COLUMN DETAIL
SCALE: 1" = 1'-0" (A-102)

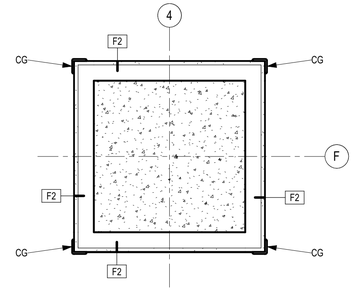

D3 COLUMN DETAIL
SCALE: 1" = 1'-0" (A-102)

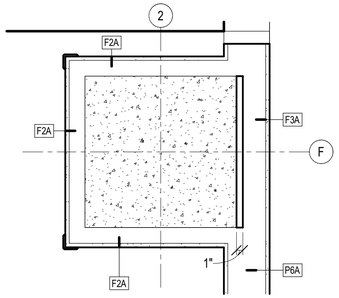

D4 COLUMN DETAIL
SCALE: 1" = 1'-0" (A-102)

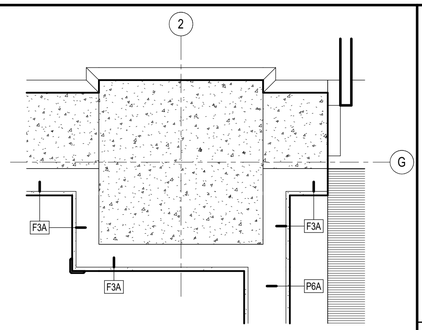

D5 COLUMN DETAIL
SCALE: 1" = 1'-0" (A-102)

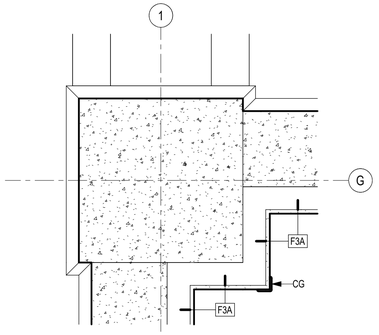

C1 COLUMN DETAIL
SCALE: 1" = 1'-0" (A-102)

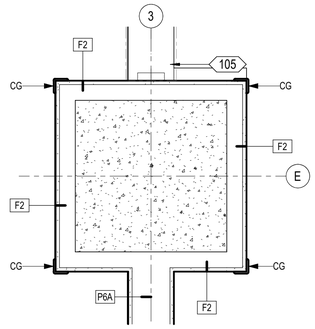

C2 COLUMN DETAIL
SCALE: 1" = 1'-0" (A-102)

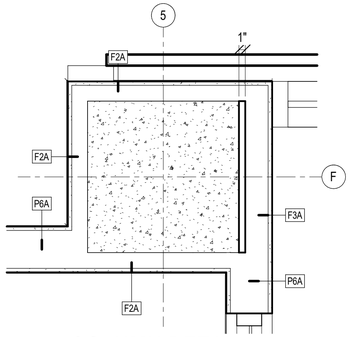

C3 COLUMN DETAIL
SCALE: 1" = 1'-0" (A-102)

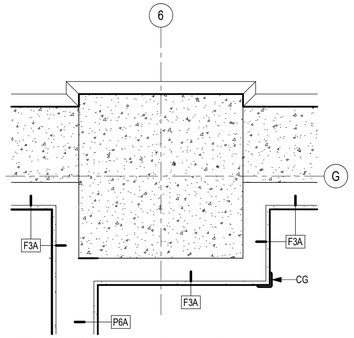

C4 COLUMN DETAIL
SCALE: 1" = 1'-0" (A-102)

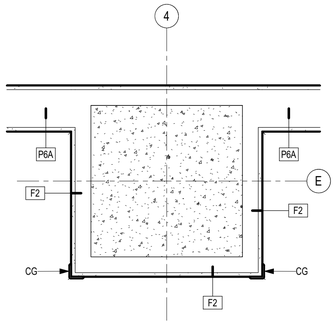

C5 COLUMN DETAIL
SCALE: 1" = 1'-0" (A-102)

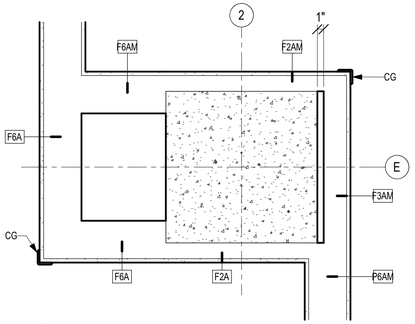

B1 COLUMN DETAIL
SCALE: 1" = 1'-0" (A-102)

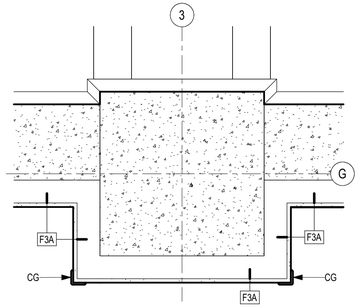

B2 COLUMN DETAIL
SCALE: 1" = 1'-0" (A-102)

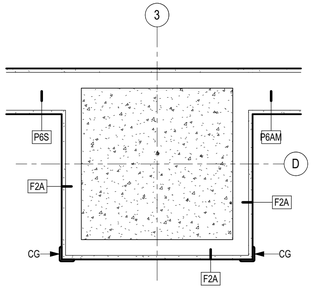

B3 COLUMN DETAIL
SCALE: 1" = 1'-0" (A-102)

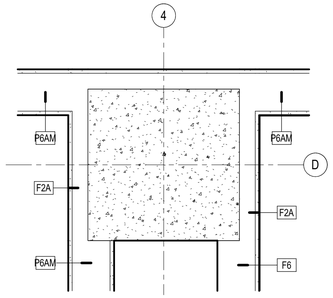

B4 COLUMN DETAIL
SCALE: 1" = 1'-0" (A-102)

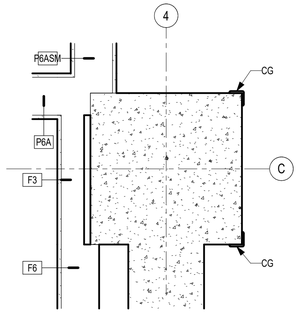

B5 COLUMN DETAIL
SCALE: 1" = 1'-0" (A-102)

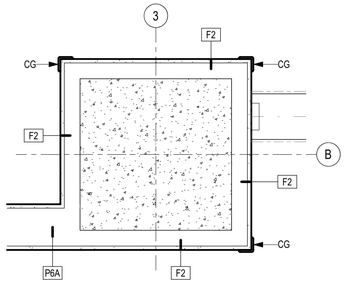

A1 COLUMN DETAIL
SCALE: 1" = 1'-0" (A-102)

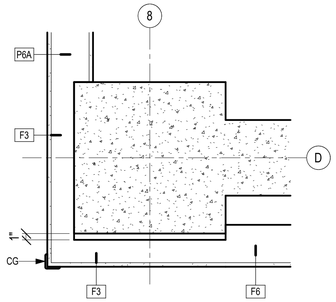

A2 COLUMN DETAIL
SCALE: 1" = 1'-0" (A-103)

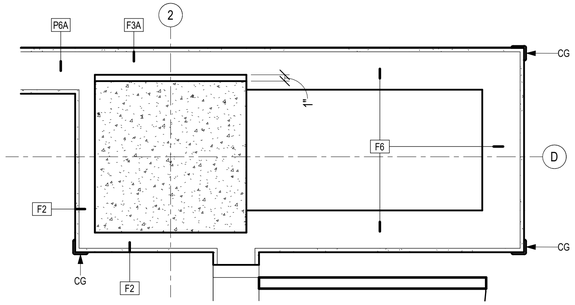

A3 COLUMN DETAIL
SCALE: 1" = 1'-0" (A-105)

SYM	DESCRIPTION	DATE	APPR

NAVFAC

MYLES M. MICHIBATA
LICENSED PROFESSIONAL ARCHITECT
No. 12367
HAWAII, U.S.A.
LIC. EXP 04/30/26 SEAL

ASMD LLC.
A/E INFO

APPROVED
Evan Miyazal
FOR COMMANDER NAVFAC

ACTIVITY
NATHANIEL PYRON, MILCON PLANNER, DPPH

SATISFACTORY TO DATE 3/10/2026

DES JG / RLB	DRW RLB	CHK JG	
PM/DM	DKS/DMK		
BRANCH MANAGER	KYM		
CHIEF ENG/ARCH	KYM		
FIRE PROTECTION	RYO		

DEPARTMENT OF THE NAVY
NAVAL FACILITIES ENGINEERING SYSTEMS COMMAND ~ PACIFIC
NAVFAC PACIFIC
U.S. NAVSUPPACT

NAVAL FACILITIES ENGINEERING SYSTEMS COMMAND
MAKALAPA, HAWAII

MCB CAMP BLAZ, GUAM

JFY 2022 PROJECT J-875
BATTLE STAFF TRAINING FACILITY

COLUMN DETAILS

SCALE: AS NOTED
EPROJECT NO.: 1696746
CONSTR. CONTR. NO.
NAVFAC DRAWING NO. 17321945
SHEET 149 OF 468

A-504

DRAWFORM REVISION: 25 AUGUST 2020

A-504
3/12/2026 9:12:47 PM
C:\Users\rtbaltimore\Documents\BLDG-875-1696746-A_rtbaltimoreFALVN.rvt

DOOR SCHEDULE

NO.	TYPE	DOOR PANEL SIZE W	DOOR PANEL SIZE H	DOOR PANEL MATERIAL	DOOR PANEL GLAZING	DOOR PANEL STC	DOOR FRAME MATERIAL	DOOR FRAME DETAILS HEAD	DOOR FRAME DETAILS JAMB	DOOR FRAME DETAILS THRESHOLD	FIRE RATING	HDW SET NO.	REMARKS
FIRST FLOOR													
101A	B1	6'-0"	7'-0"	HM	GL-1	-	HM	C3/A-604	A3/A-604	B3/A-604	-	13.0	1
101B	B1	6'-0"	7'-0"	HM	GL-1	-	HM	C3/A-604	A3/A-604	B3/A-604	-	12.0	
101C	C	3'-0"	7'-0"	AL	GL-2	-	AL	B2/A-604	A2/A-604	D5/A-605	-	7.0	
101D	C	3'-0"	7'-0"	AL	GL-2	-	AL	B2/A-604	A2/A-604	D5/A-605	-	10.0	
101E	D	6'-0"	7'-0"	AL	GL-2	-	AL	B2/A-604	A2/A-604	D5/A-605	-	7.0	2
101F	D	6'-0"	7'-0"	AL	GL-2	-	AL	B2/A-604	A2/A-604	D5/A-605	-	6.0	1, 2
102	A	3'-0"	7'-0"	SC	-	-	HM	D5/A-604	D5/A-604	C1/A-605	-	32.1	2
103	C	3'-0"	7'-0"	AL	GL-2	35	HM	B2/A-604	A2/A-604	C3/A-605	-	8.0	
104	A	3'-0"	7'-0"	SC	-	35	HM	C5/A-604	C5/A-604	C3/A-605	-	40.0	
105A	A	3'-0"	7'-0"	SC	-	35	HM	C5/A-604	C5/A-604	C5/A-605	-	39.0	
105B	A	3'-0"	7'-0"	SC	-	35	HM	C5/A-604	C5/A-604	C5/A-605	-	39.0	
106	A	3'-0"	7'-0"	SC	-	35	HM	C5/A-604	C5/A-604	C5/A-605	-	39.0	
107	A	3'-0"	7'-0"	SC	-	35	HM	C5/A-604	C5/A-604	C5/A-605	-	39.0	
107A	A1	3'-0"	7'-0"	SC	GL-2	-	HM	D5/A-604	D5/A-604	B4/A-605	-	30.1	3, 7
107B	A	3'-0"	7'-0"	AL	-	-	AL	C3/A-604	A3/A-604	B3/A-604	-	17.0	3, 7
108A	A	3'-0"	7'-0"	SC	-	50	HM	C5/A-604	C5/A-604	C5/A-605	-	19.0	4
108B	A	3'-0"	7'-0"	SC	-	50	HM	C5/A-604	C5/A-604	C5/A-605	-	19.0	4
109	A1	3'-0"	7'-0"	HM	GL-5	50	HM	C5/A-604	C5/A-604	C4/A-605	45 MIN	19.0	4
109A	A1	3'-0"	7'-0"	SC	GL-2	-	HM	D5/A-604	D5/A-604	A4/A-605	-	20.0	4
109B	A	3'-0"	7'-0"	HM	-	50	HM	C3/A-604	A1/A-605	B3/A-604	45 MIN	16.1	
109C	E	10'-0"	11'-0"	STL		-	STL	D3/A-606	A4/A-606	B4/A-606	-	1.0	
109D	E	10'-0"	11'-0"	STL		-	STL	D3/A-606	A4/A-606	B4/A-606	-	1.0	
109E	A	4'-0"	7'-0"	AL		-	AL	B3/A-604	B3/A-604	B3/A-604	-	16.0	3, 7
110A	A	3'-0"	7'-0"	SC	-	35	HM	C5/A-604	C5/A-604	C5/A-605	-	39.0	
110B	A	3'-0"	7'-0"	SC	-	35	HM	C5/A-604	C5/A-604	C5/A-605	-	39.0	
111	A	3'-0"	7'-0"	SC	-	50	HM	C5/A-604	C5/A-604	C5/A-605	-	19.0	4
111A	A1	3'-0"	7'-0"	SC	GL-2	-	HM	D5/A-604	D5/A-604	C2/A-605	-	30.0	3, 7
111B	A	3'-0"	7'-0"	AL	-	50	AL	C3/A-604	A3/A-604	C3/A-605	-	17.0	3
112	B	6'-0"	7'-0"	HM	-	-	HM	D5/A-604	D5/A-604	B3/A-605	-	27.1	2, 6
113	A	3'-0"	7'-0"	SC	-	35	HM	C5/A-604	C5/A-604	C5/A-605	-	40.0	
114	A	3'-0"	7'-0"	HM	-	50	HM	C5/A-604	C5/A-604	C4/A-605	-	21.0	5
115	A	3'-0"	7'-0"	HM	-	45	HM	C5/A-604	C5/A-604	C5/A-605	-	22.0	4, 6
116	A	3'-0"	7'-0"	HM	-	45	HM	C5/A-604	C5/A-604	C5/A-605	-	22.0	4, 6
116A	B1	6'-0"	7'-0"	SC	GL-2	-	HM	D5/A-604	D5/A-604	A5/A-605	-	26.0	3, 7
116B	B	6'-0"	7'-0"	AL	-	-	AL	C3/A-604	A3/A-604	B3/A-604	-	11.0	3, 7
117B	B1	6'-0"	7'-0"	HM	GL-5	-	HM	A5/A-604	A5/A-604	A3/A-605	60 MIN	24.0	
118	A	3'-0"	7'-0"	HM	-	-	HM	D5/A-604	D5/A-604	A1/A-605	-	37.0	
119	B	6'-0"	7'-0"	AL	-	-	AL	C3/A-604	A3/A-604	B3/A-604	-	14.0	2
120	A	3'-0"	7'-0"	HM	-	-	HM	C3/A-604	A3/A-604	B3/A-604	45 MIN	18.0	2
120A	B	6'-0"	7'-0"	HM	-	-	HM	C3/A-604	A3/A-604	B3/A-604	45 MIN	14.0	2
121	A	3'-0"	7'-0"	SC	-	-	HM	D5/A-604	D5/A-604	A2/A-605	-	44.0	
122	A	3'-0"	7'-0"	HM	-	-	HM	D5/A-604	D5/A-604	A3/A-605	-	33.0	6
123	A	3'-0"	7'-0"	SC	-	-	HM	D5/A-604	D5/A-604	A2/A-605	-	44.0	
124	A	4'-0"	7'-0"	HM		-	HM	D5/A-604	D5/A-604	A2/A-605	-	36.0	6
125	A	3'-0"	7'-0"	SC	-	35	HM	C5/A-604	C5/A-604	C3/A-605	-	40.0	
125A	A	3'-0"	7'-0"	SC	-	35	HM	C5/A-604	C5/A-604	C3/A-605	-	42.0	
125B	A1	4'-0"	7'-0"	HM	GL-5	-	HM	B5/A-604	B5/A-604	A3/A-605	60 MIN	31.0	
125C	A	4'-0"	7'-0"	AL		-	AL	C3/A-604	A3/A-604	B3/A-604	-	16.0	3, 7
126	A	3'-0"	7'-0"	SC	-	50	HM	C5/A-604	C5/A-604	C4/A-605	-	38.0	
126A	A	3'-0"	7'-0"	SC	-	35	HM	C5/A-604	C5/A-604	C5/A-605	-	42.0	
126B	A	3'-0"	7'-0"	SC	-	35	HM	C5/A-604	C5/A-604	C5/A-605	-	42.0	
126C	A	3'-0"	7'-0"	SC	-	-	HM	D5/A-604	D5/A-604	B5/A-605	-	33.0	
126D	B	8'-0"	7'-6"	SC	-	-	HM	D5/A-604	D5/A-604	B5/A-605	-	28.0	
126E	A1	3'-0"	7'-0"	SC	GL-2	-	HM	D5/A-604	D5/A-604	B1/A-605	-	30.1	3, 7
126F	A	3'-0"	7'-0"	AL	-	-	AL	C3/A-604	A3/A-604	B3/A-604	-	17.0	3
127	A	3'-0"	7'-0"	SC	-	35	HM	C5/A-604	C5/A-604	C4/A-605	-	40.0	
127A	A	3'-0"	7'-0"	SC	-	35	HM	C5/A-604	C5/A-604	C5/A-605	-	42.0	
127B	A	3'-0"	7'-0"	SC	-	35	HM	C5/A-604	C5/A-604	C5/A-605	-	42.0	
128	A	3'-0"	7'-0"	SC	-	35	HM	C5/A-604	C5/A-604	C4/A-605	-	40.0	
128A	A	3'-0"	7'-0"	SC	-	35	HM	B2/A-605	B2/A-605	C5/A-605	-	42.0	
128B	A	3'-0"	7'-0"	SC	-	35	HM	C5/A-604	C5/A-604	C5/A-605	-	42.0	
128C	A	3'-0"	7'-0"		-	-		D5/A-604	D5/A-604	B5/A-605	-	33.0	
129	A	3'-0"	7'-0"	SC	-	35	HM	C5/A-604	C5/A-604	C4/A-605	-	40.0	

DOOR SCHEDULE

NO.	TYPE	DOOR PANEL SIZE W	DOOR PANEL SIZE H	DOOR PANEL MATERIAL	DOOR PANEL GLAZING	DOOR PANEL STC	DOOR FRAME MATERIAL	DOOR FRAME DETAILS HEAD	DOOR FRAME DETAILS JAMB	DOOR FRAME DETAILS THRESHOLD	FIRE RATING	HDW SET NO.	REMARKS
130	B	6'-0"	7'-0"	AL	-	-	AL	C3/A-604	A3/A-604	B3/A-604	-	14.1	
SECOND FLOOR													
201	C	3'-0"	7'-0"	AL	GL-2	35	HM	B2/A-604	A2/A-604	C3/A-605	-	8.0	
202	A1	3'-0"	7'-0"	HM	GL-4	35	HM	C5/A-604	C5/A-604	C3/A-605	-	41.0	6
203	A	3'-0"	7'-0"	SC	-	35	HM	C5/A-604	C5/A-604	C5/A-605	-	40.0	
204	B	6'-0"	7'-0"	HM	-	-	HM	D5/A-604	D5/A-604	B3/A-605	-	27.1	6
205A	A	3'-0"	7'-0"	SC	-	35	HM	C5/A-604	C5/A-604	C5/A-605	-	39.0	
205B	A	3'-0"	7'-0"	SC	-	35	HM	C5/A-604	C5/A-604	C5/A-605	-	39.0	
206A	A	3'-0"	7'-0"	SC	-	35	HM	C5/A-604	C5/A-604	C5/A-605	-	39.0	
206B	A	3'-0"	7'-0"	SC	-	35	HM	C5/A-604	C5/A-604	C5/A-605	-	39.0	
207	A	3'-0"	7'-0"	SC	-	35	HM	C5/A-604	C5/A-604	C5/A-605	-	40.0	
207A	A1	4'-0"	7'-0"	HM	GL-5	-	HM	B5/A-604	B5/A-604	D4/A-605	60 MIN	30.0	3
208A	A	3'-0"	7'-0"	SC	-	35	HM	C5/A-604	C5/A-604	C5/A-605	-	39.0	
208B	A	3'-0"	7'-0"	SC	-	35	HM	C5/A-604	C5/A-604	C5/A-605	-	39.0	
209	A	3'-0"	7'-0"	SC	-	50	HM	C5/A-604	C5/A-604	C5/A-605	-	19.0	4
210	A	4'-0"	7'-0"	HM		-	HM	D5/A-604	D5/A-604	B4/A-605	-	33.0	
211	A	3'-0"	7'-0"	SC	-	50	HM	C5/A-604	C5/A-604	C5/A-605	-	21.0	4
211A	A	3'-0"	7'-0"	SC	-	35	HM	C5/A-604	C5/A-604	C5/A-605	-	42.0	
211B	A	3'-0"	7'-0"	SC	-	35	HM	C5/A-604	C5/A-604	C5/A-605	-	42.0	
211C	A	3'-0"	7'-0"	SC	-	35	HM	C5/A-604	C5/A-604	C5/A-605	-	42.0	
211D	A	3'-0"	7'-0"	SC	-	35	HM	C5/A-604	C5/A-604	C5/A-605	-	42.0	
211E	A	3'-0"	7'-0"	SC	-	35	HM	C5/A-604	C5/A-604	C5/A-605	-	42.0	
211F	A	3'-0"	7'-0"	SC	-	35	HM	C5/A-604	C5/A-604	C5/A-605	-	42.0	
212	A	3'-0"	7'-0"	HM	-	50	HM	C5/A-604	C5/A-604	C4/A-605	-	21.0	5
213	A	3'-0"	7'-0"	HM	-	45	HM	C5/A-604	C5/A-604	C5/A-605	-	22.0	4, 6
214	A	3'-0"	7'-0"	HM	-	50	HM	C5/A-604	C5/A-604	C5/A-605	-	19.0	4, 6
215	A	3'-0"	7'-0"	HM	-	-	HM	D5/A-604	D5/A-604	A5/A-605	-	33.0	6
215A	B1	6'-0"	7'-0"	HM	GL-5	-	HM	A5/A-604	A5/A-604	A3/A-605	60 MIN	25.0	
216	A	3'-0"	7'-0"	HM	-	-	HM	D5/A-604	D5/A-604	A1/A-605	-	37.0	6
217	A	3'-0"	7'-0"	HM	-	-	HM	C5/A-604	C5/A-605	A3/A-605	-	32.0	2, 6
217A	A	3'-0"	7'-0"	HM	-	-	HM	B1/A-605	B1/A-605	A3/A-605	-	32.0	2
218	A	3'-0"	7'-0"	HM	-	-	HM	B1/A-605	B1/A-605	A5/A-605	-	35.0	
218A	A	4'-0"	7'-0"	HM		-	HM	D5/A-604	D5/A-604	A5/A-605	-	33.0	
219	A	3'-0"	7'-0"	SC	-	-	HM	D5/A-604	D5/A-604	A2/A-605	-	44.0	
219A	A	3'-0"	7'-0"	SC	-	-	HM	D5/A-604	D5/A-604	A5/A-605	-	43.0	
220	A	3'-0"	7'-0"	HM	-	-	HM	D5/A-604	D5/A-604	A3/A-605	-	34.0	
221	A	3'-0"	7'-0"	SC	-	-	HM	D5/A-604	D5/A-604	A5/A-605	-	44.0	
222	A	3'-0"	7'-0"	SC	-	35	HM	C5/A-604	C5/A-604	C3/A-605	-	40.0	
223	B	6'-0"	7'-0"	HM	-	-	HM	C5/A-604	C5/A-604	A1/A-605	-	27.1	
223A	A1	4'-0"	7'-0"	HM	GL-5	-	HM	B5/A-604	B5/A-604	A3/A-605	60 MIN	31.0	
224	A	3'-0"	7'-0"	SC	-	35	HM	C5/A-604	C5/A-604	C5/A-605	-	40.0	
225A	A	3'-0"	7'-0"	SC	-	35	HM	C5/A-604	C5/A-604	C5/A-605	-	39.0	
225B	A	3'-0"	7'-0"	SC	-	35	HM	C5/A-604	C5/A-604	C5/A-605	-	39.0	
226A	A	3'-0"	7'-0"	SC	-	35	HM	C5/A-604	C5/A-604	C5/A-605	-	39.0	
226B	A	3'-0"	7'-0"	SC	-	35	HM	C5/A-604	C5/A-604	C5/A-605	-	39.0	
227A	A	3'-0"	7'-0"	SC	-	35	HM	C5/A-604	C5/A-604	C5/A-605	-	39.0	
227B	A	3'-0"	7'-0"	SC	-	35	HM	C5/A-604	C5/A-604	C5/A-605	-	39.0	
SITE													
001	F	8'-8"	8'-6"	STL		-	STL	A2/A-606	A3/A-606	-	-	1.0	
002	F	10'-0"	7'-0"	AL	-	STL	STL	A2/A-606	A3/A-606	-	-	3.0	
003	B	6'-0"	7'-0"	AL	-	AL	AL	B3/A-604	B3/A-604	B5/A-605	-	15.0	8
004	G	4'-0"	7'-0"	STL	-	STL	STL	C4/AS111	C4/AS111	C4/AS111	-	2.0	8
005	H	4'-0"	7'-0"	SEE CIVIL	-	SEE CIVIL	SEE CIVIL	SEE CIVIL	SEE CIVIL	SEE CIVIL	-	4.0	
006	H	4'-0"	7'-0"	SEE CIVIL	-	SEE CIVIL	SEE CIVIL	SEE CIVIL	SEE CIVIL	SEE CIVIL	-	4.0	
007	H	4'-0"	7'-0"	SEE CIVIL	-	SEE CIVIL	SEE CIVIL	SEE CIVIL	SEE CIVIL	SEE CIVIL	-	5.0	

OPERABLE PARTITION SCHEDULE

NO.	LENGTH	STC	DETAILS HEAD	DETAILS JAMB	DETAILS THRESHOLD	REMARKS
FIRST FLOOR						
105	17'-5 3/4"	50	C1/A-603	A4/A-603	A1/A-603	
108	27'-3 3/4"	50	C1/A-603	A2/A-603	A1/A-603	
110	25'-3 5/8"	50	C1/A-603	A4/A-603	A1/A-603	
SECOND FLOOR						
205	16'-2 5/8"	50	C1/A-603	A4/A-603	A1/A-603	
206	16'-2 5/8"	50	C1/A-603	A4/A-603	A1/A-603	
208	25'-2 5/8"	50	C1/A-603	A4/A-603	A1/A-603	
225	26'-2 1/8"	50	C1/A-603	A2/A-603	A1/A-603	
226	16'-2 5/8"	50	C1/A-603	A4/A-603	A1/A-603	
227	16'-2 5/8"	50	C1/A-603	A4/A-603	A1/A-603	

GENERAL SHEET NOTES

1. ABBREVIATIONS AND NOTES ARE USED FOR THIS SHEET ONLY.
2. SEE SPECIFICATIONS FOR HARDWARE SETS.

DOOR SCHEDULE LEGEND

NOTE: (-) INDICATES FEATURE NOT REQUIRED. ALL DOORS ARE 1-3/4" THICK UNLESS OTHERWISE NOTED.

DOOR PANEL MATERIAL

AL	ALUMINUM
HM	HOLLOW METAL
SC	SOLID CORE

DOOR PANEL GLAZING

GL-1	INSULATED GLAZING UNIT
GL-2	TEMPERED
GL-3	STC LAMINATED
GL-4	LAMINATED
GL-5	FIRE RATED GLAZING

DOOR FRAME MATERIAL

AL	ALUMINUM
HM	HOLLOW METAL

REMARKS

1	ADA OPERATOR
2	ACCESS CONTROL
3	EXIT ONLY
4	KABA MAS X-10 LKM10K FF-L-2890C TYPE IV
5	KABA MAS X-10 LKM10K FF-L-2890C TYPE II
6	IN SMOKE PARTITION
7	EAC INFRASTRUCTURE
8	OPTION ITEM #2

SYM	DESCRIPTION	DATE	APPR

NAVFAC

MYLES M. MICHIBATA LICENSED PROFESSIONAL ARCHITECT No. 12367 HAWAII, U.S.A.
LIC. EXP 04/30/26

ASMD LLC.
A/E INFO

APPROVED
FOR COMMANDER NAVFAC

ACTIVITY
NATHANIEL PYRON, MILCON PLANNER, DPPH

SATISFACTORY TO DATE 3/10/2026

DES JG / RLB	DRW RLB	CHK JG	
PM/DM	DKS/DMK		
BRANCH MANAGER	KYM		
CHIEF ENG/ARCH	KYM		
FIRE PROTECTION	RYO		

DEPARTMENT OF THE NAVY
NAVFAC PACIFIC
U.S. NAVSUPPACT
NAVAL FACILITIES ENGINEERING SYSTEMS COMMAND
NAVAL FACILITIES ENGINEERING SYSTEMS COMMAND ~ PACIFIC
MAKALAPA, HAWAII
MCB CAMP BLAZ, GUAM
JFY 2022 PROJECT J-875
BATTLE STAFF TRAINING FACILITY
DOOR AND OPERABLE PARTITION SCHEDULES

SCALE: AS NOTED
EPROJECT NO.: 1696746
CONSTR. CONTR. NO.
NAVFAC DRAWING NO. 17321946
SHEET 150 OF 468
A-601

DRAWFORM REVISION: 25 AUGUST 2020

3/12/2026 9:12:49 PM A-601
C:\Users\rbilliton\Documents\BLDG-875-1696746-A_rbillintonsaFALVN.rvt

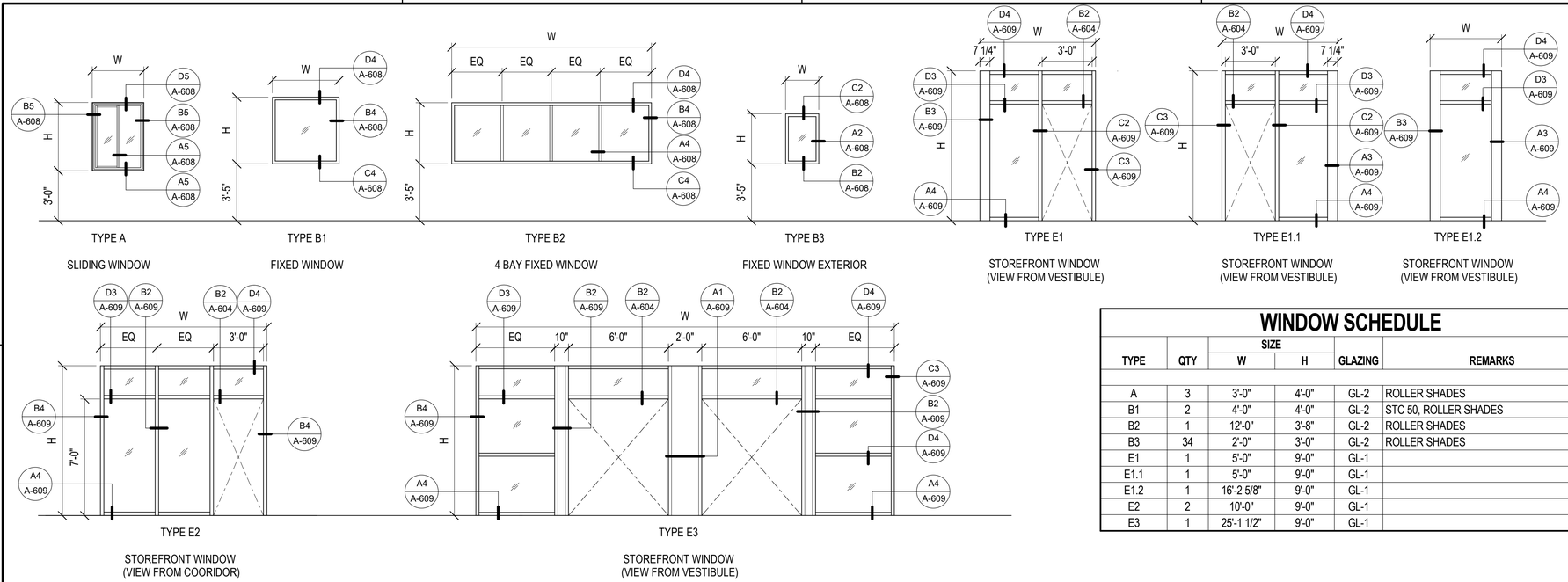

C1 WINDOW TYPES

SCALE: 1/4" = 1'-0"

WINDOW SCHEDULE GENERAL NOTES

1. ABBREVIATIONS AND NOTES ARE USED FOR THIS SHEET ONLY.
2. SEE SPECIFICATIONS FOR GLAZING TYPES.
3. SECURE STOREFRONT WINDOW FRAME TO UNDERSIDE OF STRUCTURE PER MFR RECOMMENDATION.

WINDOW SCHEDULE LEGEND

1. (-) INDICATES FEATURE NOT REQUIRED
2. WINDOW FRAME
   AL = ALUMINUM
3. WINDOW GLAZING
   GL-1 = IGU
   GL-2 = TEMPERED
   GL-3 = STC LAMINATED
   GL-4 = LAMINATED
   GL-5 = FIRE RATED GLAZING

WINDOW SCHEDULE

TYPE	QTY	SIZE W	SIZE H	GLAZING	REMARKS
A	3	3'-0"	4'-0"	GL-2	ROLLER SHADES
B1	2	4'-0"	4'-0"	GL-2	STC 50, ROLLER SHADES
B2	1	12'-0"	3'-8"	GL-2	ROLLER SHADES
B3	34	2'-0"	3'-0"	GL-2	ROLLER SHADES
E1	1	5'-0"	9'-0"	GL-1	
E1.1	1	5'-0"	9'-0"	GL-1	
E1.2	1	16'-2 5/8"	9'-0"	GL-1	
E2	2	10'-0"	9'-0"	GL-1	
E3	1	25'-1 1/2"	9'-0"	GL-1	

PART OF OPTION ITEM #2

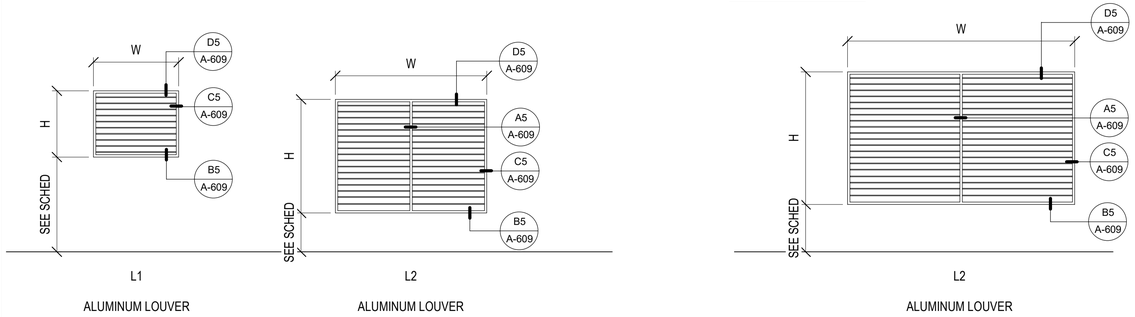

B1 LOUVER TYPES

SCALE: 1/4" = 1'-0"

LOUVER SCHEDULE

NO.	TYPE	SIZE W	SIZE H	SILL HEIGHT	REMARKS
LVR-102	L1	4'-6"	3'-6"	9'-6"	
LVR-103	L1	1'-6"	1'-4"	7'-10"	
LVR-104	L1	1'-6"	1'-4"	10'-0"	
LVR-105	L1	1'-10"	2'-0"	7'-6"	
LVR-106	L1	3'-0"	2'-0"	10'-8"	
LVR-107	L1	5'-0"	3'-0"	5'-0"	
LVR-108	L1	5'-0"	4'-0"	7'-0"	
LVR-110	L2	6'-0"	6'-0"	2'-0"	QTY: 7
LVR-201	L1	3'-0"	2'-0"	9'-0"	
LVR-202	L1	4'-6"	3'-6"	7'-4"	
LVR-203	L1	1'-6"	1'-4"	8'-0"	

OPTION ITEM #2

NO.	TYPE	SIZE W	SIZE H	SILL HEIGHT	REMARKS
LVR-212	L2	12'-0"	7'-0"	2'-6"	ACOUSTICAL
LVR-213	L2	10'-0"	6'-6"	2'-6"	ACOUSTICAL
LVR-214	L2	10'-0"	6'-6"	2'-6"	ACOUSTICAL

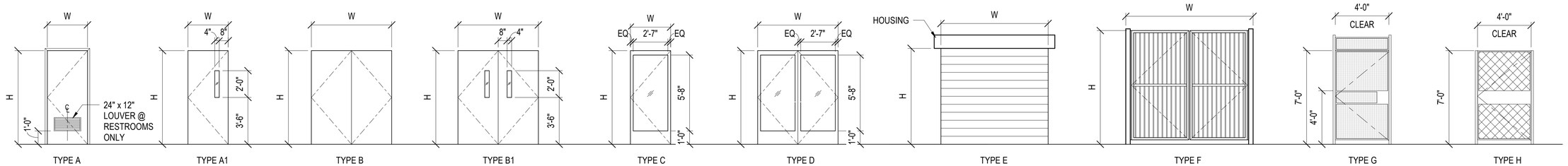

A1 DOOR TYPES

SCALE: 1/4" = 1'-0"

GRAPHIC SCALE(S)

1/4" = 1' - 0" 0 1' 5' 10' 15'

SYM	DESCRIPTION	DATE	APPR

NAVFAC

MYLES M. MICHIBATA LICENSED PROFESSIONAL ARCHITECT No. 12367 HAWAII, U.S.A.
LIC. EXP 04/30/26

ASMD LLC.

APPROVED
FOR COMMANDER NAVFAC

ACTIVITY
NATHANIEL PYRON, MILCON PLANNER, DPPH
SATISFACTORY TO DATE 3/10/2026
DES JG / RLB DRW RLB CHK JG
PM/DM DKS/DMK
BRANCH MANAGER KYM
CHIEF ENG/ARCH KYM
FIRE PROTECTION RYO

DEPARTMENT OF THE NAVY
NAVFAC PACIFIC
NAVAL FACILITIES ENGINEERING SYSTEMS COMMAND – PACIFIC
MAKALAPA, HAWAII
U.S. NAVSUPPACT
MCB CAMP BLAZ, GUAM
JFY 2022 PROJECT J-875
BATTLE STAFF TRAINING FACILITY
DOOR, WINDOW, LOUVER TYPES AND SCHEDULES & OPTION ITEM #2

SCALE: AS NOTED
EPROJECT NO.: 1696746
CONSTR. CONTR. NO.
NAVFAC DRAWING NO. 17321947
SHEET 151 OF 468
A-602
DRAWFORM REVISION: 25 AUGUST 2020

3/12/2026 9:16:41 PM A-602
C:\Users\tbaltrons\Documents\BLDG-3875-1696746-A_rbaltrons\F4LVN.rvt

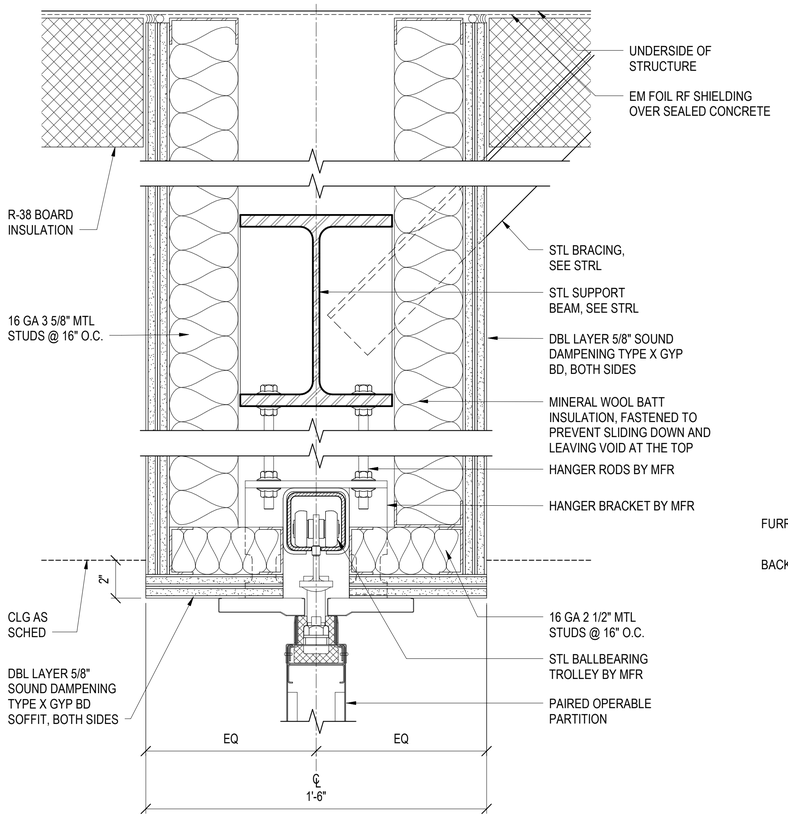

C1 OPERABLE PARTITION HEAD DETAIL

SCALE: 3" = 1'-0"

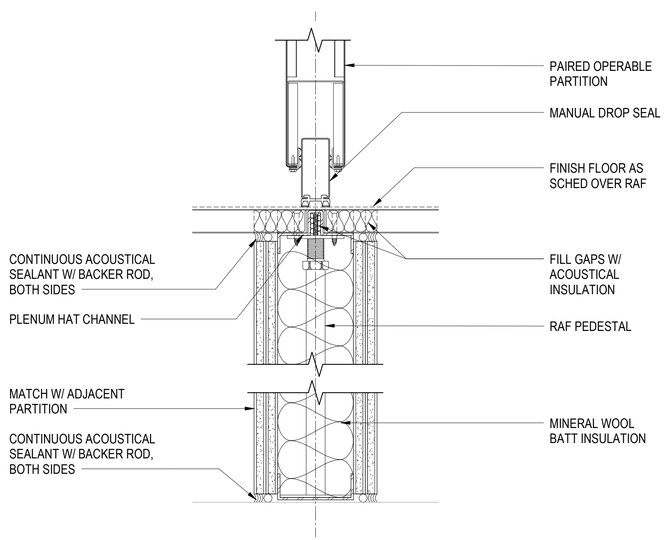

A1 OPERABLE PARTITION THRESHOLD DETAIL

SCALE: 3" = 1'-0"

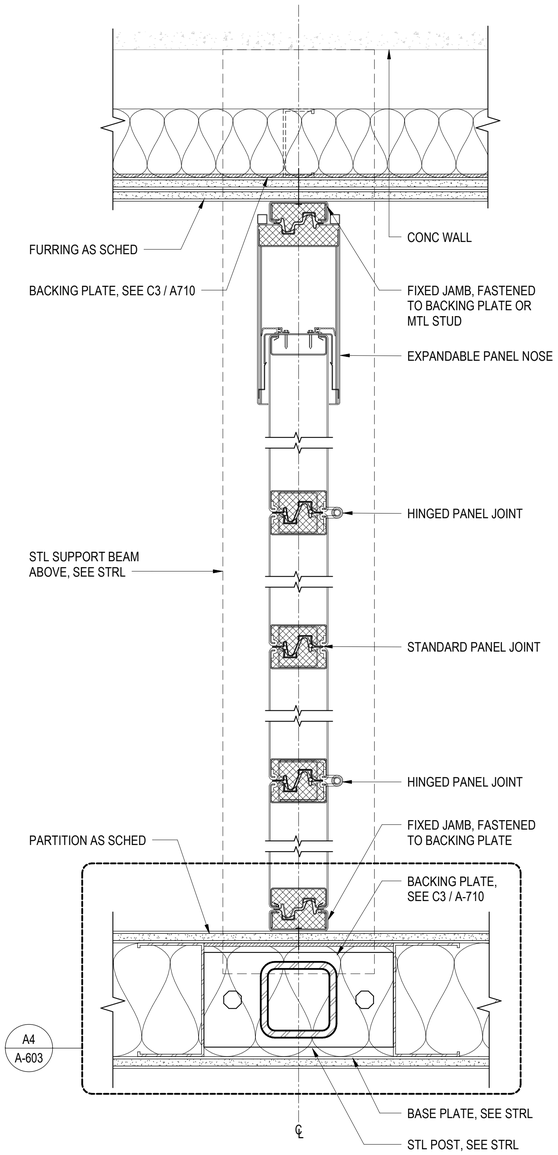

A2 JAMB - OPERABLE PARTITION - STEEL POST

SCALE: 3" = 1'-0"

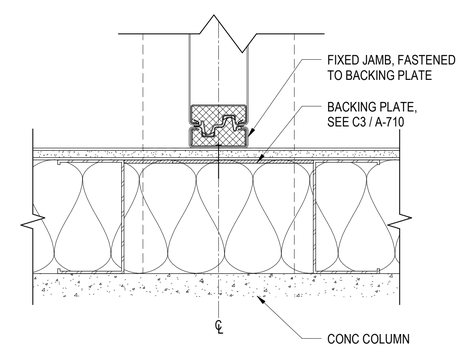

A4 JAMB - OPERABLE PARTITION @ CONC COLUMN

SCALE: 3" = 1'-0" (A-603)

GRAPHIC SCALE(S)

3" = 1' - 0" 0 3" 6" 1'

SYM	DESCRIPTION	DATE	APPR

NAVFAC

MYLES M. MICHIBATA LICENSED PROFESSIONAL ARCHITECT No. 12367 HAWAII, U.S.A.
LIC. EXP 04/30/26 SEAL

ASMD LLC. A/E INFO

APPROVED Evan Mizel
FOR COMMANDER NAVFAC

ACTIVITY
NATHANIEL PYRON, MILCON PLANNER, DPPH

SATISFACTORY TO DATE 3/10/2026

DES JG / RLB	DRW RLB	CHK JG
PM/DM	DKS/DMK	
BRANCH MANAGER	KYM	
CHIEF ENG/ARCH	KYM	
FIRE PROTECTION	RYO	

DEPARTMENT OF THE NAVY
NAVFAC PACIFIC
U.S. NAVSUPPACT
NAVAL FACILITIES ENGINEERING SYSTEMS COMMAND
NAVAL FACILITIES ENGINEERING SYSTEMS COMMAND – PACIFIC
MAKALAPA, HAWAII
MCB CAMP BLAZ, GUAM
JFY 2022 PROJECT J-875
BATTLE STAFF TRAINING FACILITY
OPERABLE PARTITION DETAILS

SCALE: AS NOTED
EPROJECT NO.: 1696746
CONSTR. CONTR. NO.
NAVFAC DRAWING NO. 17321948
SHEET 152 OF 468
A-603

DRAWFORM REVISION: 25 AUGUST 2020

A-603
3/12/2026 9:12:51 PM
C:\Users\tbaltrons\Documents\BLDG-8775-1696746-A_rbaltrons-F4LVN.rvt

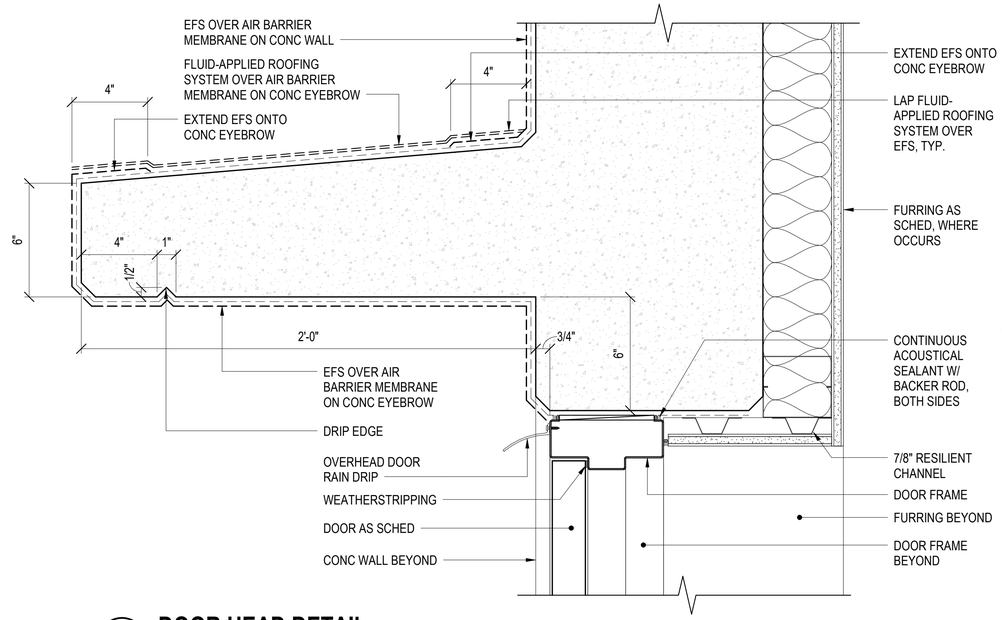

C3 DOOR HEAD DETAIL

SCALE: 3" = 1'-0"

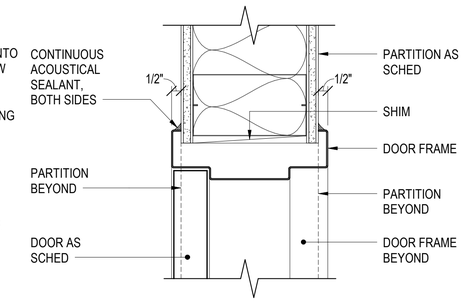

D5 DOOR HEAD DETAIL (JAMB SIM)

SCALE: 3" = 1'-0"

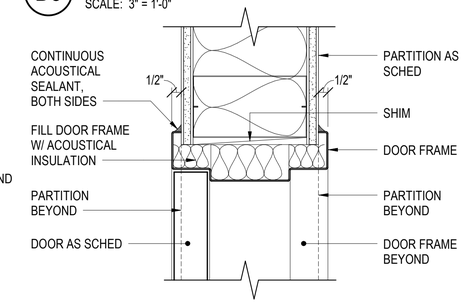

C5 DOOR HEAD DETAIL (JAMB SIM)

SCALE: 3" = 1'-0"

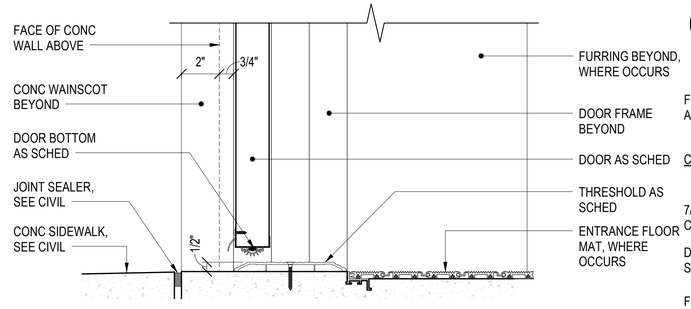

B3 DOOR THRESHOLD DETAIL

SCALE: 3" = 1'-0"

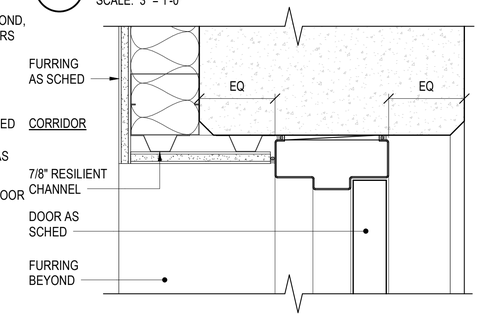

B5 DOOR HEAD DETAIL (JAMB SIM)

SCALE: 3" = 1'-0"

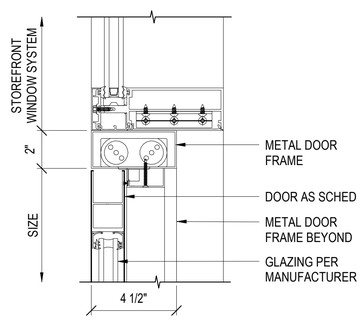

B2 STOREFRONT DOOR HEAD

SCALE: 3" = 1'-0" (A-602)

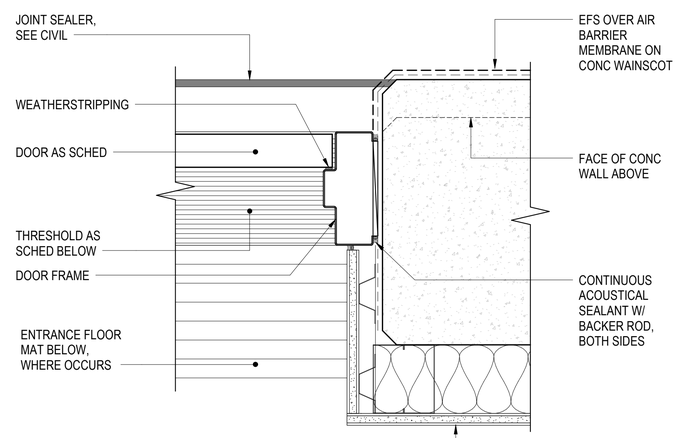

A3 EXTERIOR DOOR JAMB DETAIL

SCALE: 3" = 1'-0"

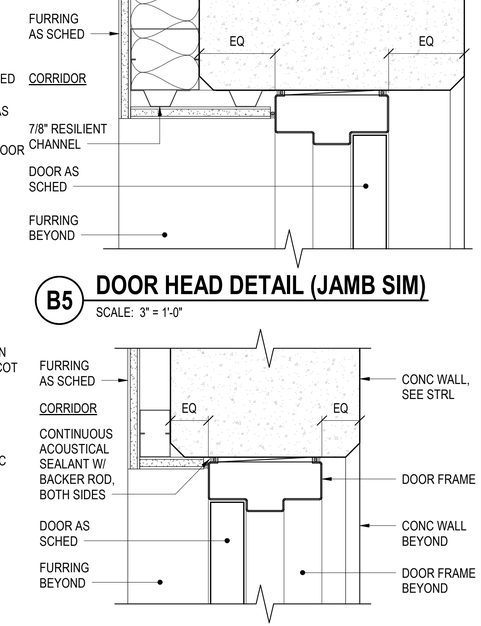

A5 DOOR HEAD DETAIL (JAMB SIM)

SCALE: 3" = 1'-0"

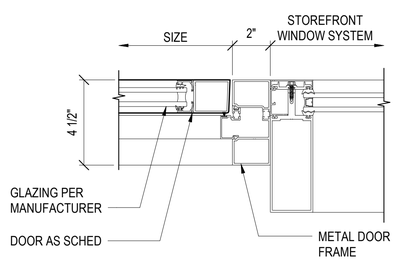

A2 STOREFRONT DOOR JAMB

SCALE: 3" = 1'-0"

GRAPHIC SCALE(S)

1" = 1' - 0" 0 6" 1' 2' 3'

3" = 1' - 0" 0 3" 6" 1'

SYM	DESCRIPTION	DATE	APPR

NAVFAC

MYLES M. MICHIBATA LICENSED PROFESSIONAL ARCHITECT No. 12367 HAWAII, U.S.A.

LIC. EXP 04/30/26

ASMD LLC.

A/E INFO

APPROVED Evan Mizell

FOR COMMANDER NAVFAC

ACTIVITY

NATHANIEL PYRON, MILCON PLANNER, DPPH

SATISFACTORY TO DATE 3/10/2026

DES JG / RLB DRW RLB CHK JG

PM/DM DKS/DMK

BRANCH MANAGER KYM

CHIEF ENG/ARCH KYM

FIRE PROTECTION RYO

DEPARTMENT OF THE NAVY
NAVFAC PACIFIC
NAVAL FACILITIES ENGINEERING SYSTEMS COMMAND
NAVAL FACILITIES ENGINEERING SYSTEMS COMMAND ~ PACIFIC
MAKALAPA, HAWAII
U.S. NAVSUPPACT
MCB CAMP BLAZ, GUAM

JFY 2022 PROJECT J-875
BATTLE STAFF TRAINING FACILITY

DOOR DETAILS

SCALE: AS NOTED

EPROJECT NO.: 1696746

CONSTR. CONTR. NO.

NAVFAC DRAWING NO. 17321949

SHEET 153 OF 468

A-604

DRAWFORM REVISION: 25 AUGUST 2020

3/12/2026 9:12:51 PM A-604
C:\Users\rtbaritona\Documents\BLDG-875-1696746-A_rtbaritonaF4LVN.rvt

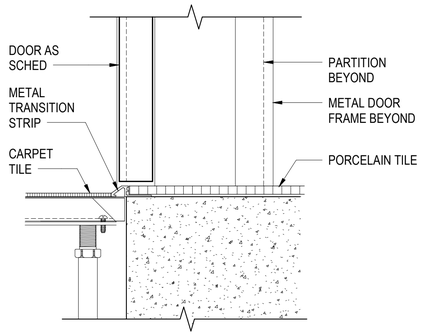

C1 THRESHOLD DETAIL
SCALE: 3" = 1'-0"

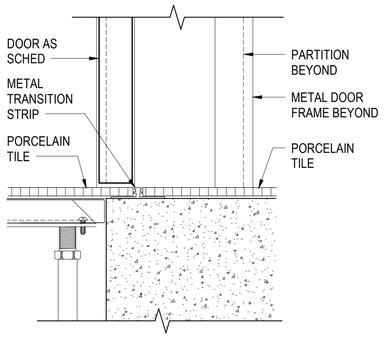

C2 THRESHOLD DETAIL
SCALE: 3" = 1'-0"

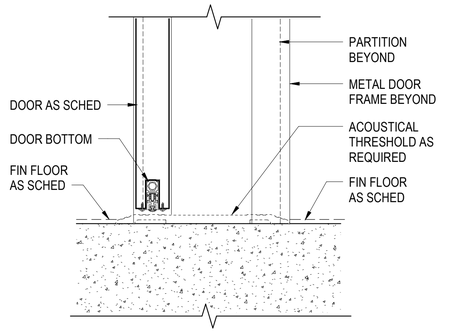

C3 ACOUSTICAL THRESHOLD DETAIL
SCALE: 3" = 1'-0"

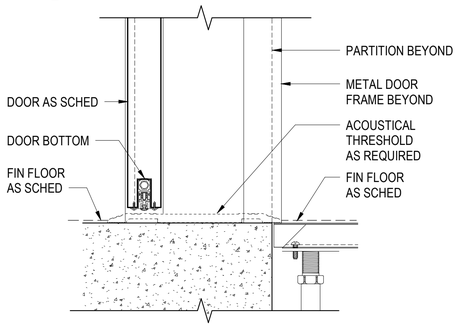

C4 ACOUSTICAL THRESHOLD DETAIL
SCALE: 3" = 1'-0"

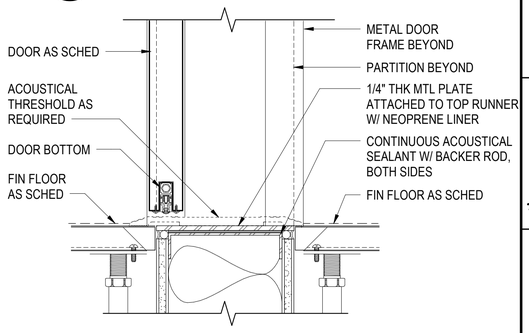

C5 ACOUSTICAL THRESHOLD DETAIL
SCALE: 3" = 1'-0"

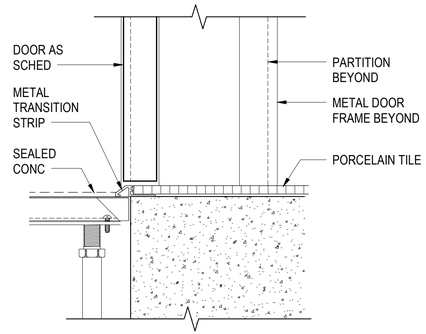

D4 THRESHOLD DETAIL
SCALE: 3" = 1'-0"

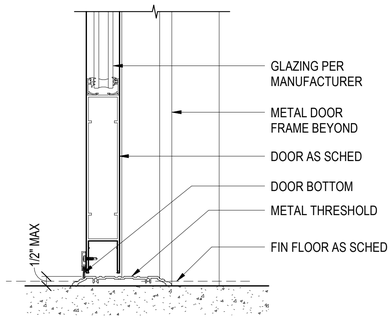

D5 THRESHOLD DETAIL
SCALE: 3" = 1'-0"

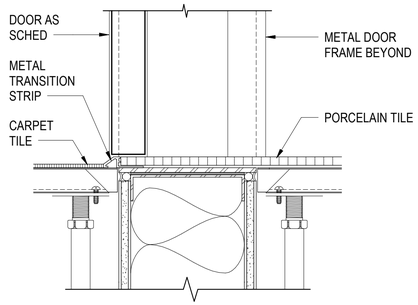

B1 THRESHOLD DETAIL
SCALE: 3" = 1'-0"

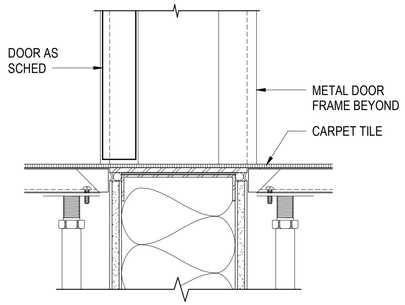

B2 THRESHOLD DETAIL
SCALE: 3" = 1'-0"

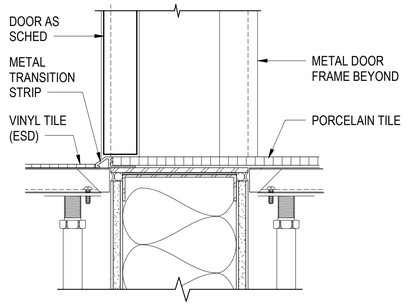

B3 THRESHOLD DETAIL
SCALE: 3" = 1'-0"

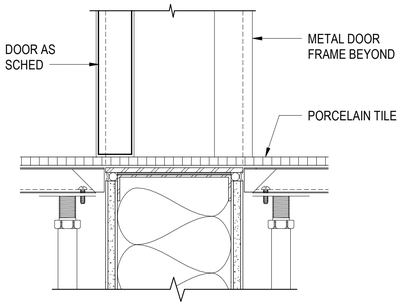

B4 THRESHOLD DETAIL
SCALE: 3" = 1'-0"

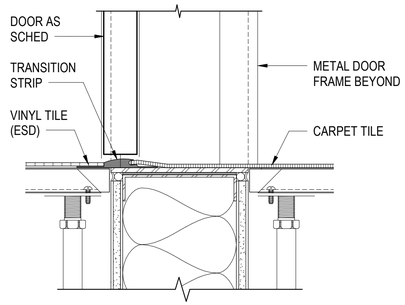

B5 THRESHOLD DETAIL
SCALE: 3" = 1'-0"

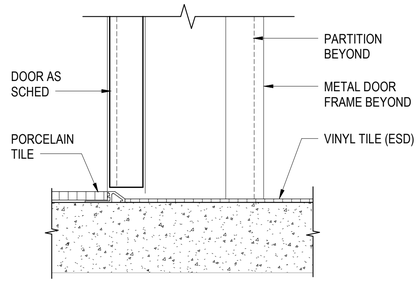

A1 THRESHOLD DETAIL
SCALE: 3" = 1'-0"

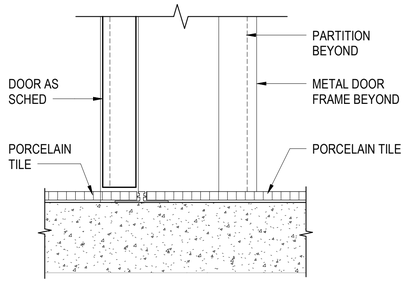

A2 THRESHOLD DETAIL
SCALE: 3" = 1'-0"

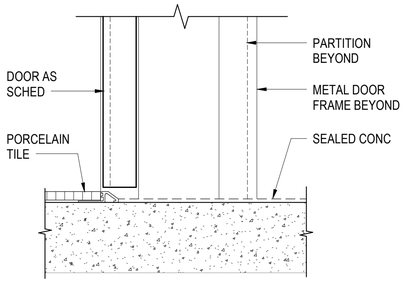

A3 THRESHOLD DETAIL
SCALE: 3" = 1'-0"

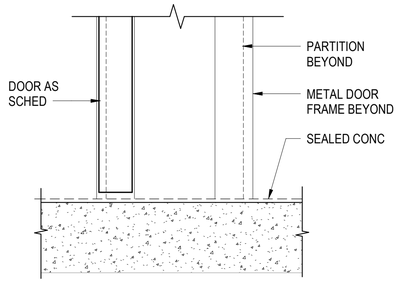

A4 THRESHOLD DETAIL
SCALE: 3" = 1'-0"

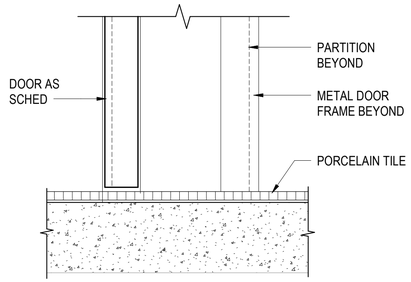

A5 THRESHOLD DETAIL
SCALE: 3" = 1'-0"

SYM	DESCRIPTION	DATE	APPR

NAVFAC

MYLES M. MICHIBATA — LICENSED PROFESSIONAL ARCHITECT No. 12367 — HAWAII, U.S.A.
LIC. EXP 04/30/26 SEAL

ASMD L.L.C. A/E INFO

APPROVED
Evan Mizuno
FOR COMMANDER NAVFAC

ACTIVITY
NATHANIEL PYRON, MILCON PLANNER, DPPH
SATISFACTORY TO DATE 3/10/2026

DES JG / RLB	DRW RLB	CHK JG	
PM/DM	DKS/DMK		
BRANCH MANAGER	KYM		
CHIEF ENG/ARCH	KYM		
FIRE PROTECTION	RYO		

DEPARTMENT OF THE NAVY
NAVAL FACILITIES ENGINEERING SYSTEMS COMMAND ~ PACIFIC
NAVFAC PACIFIC
U.S. NAVSUPPACT
NAVAL FACILITIES ENGINEERING SYSTEMS COMMAND
MAKALAPA, HAWAII
MCB CAMP BLAZ, GUAM
JFY 2022 PROJECT J-875
BATTLE STAFF TRAINING FACILITY
DOOR DETAILS

SCALE: AS NOTED
EPROJECT NO.: 1696746
CONSTR. CONTR. NO.
NAVFAC DRAWING NO. 17321950
SHEET 154 OF 468
A-605

DRAWFORM REVISION: 25 AUGUST 2020

3/12/2026 9:12:52 PM A-605
C:\Users\rlbellitona\Documents\BLDG-875-1696746-A_rblellitonaF4LVN.rvt

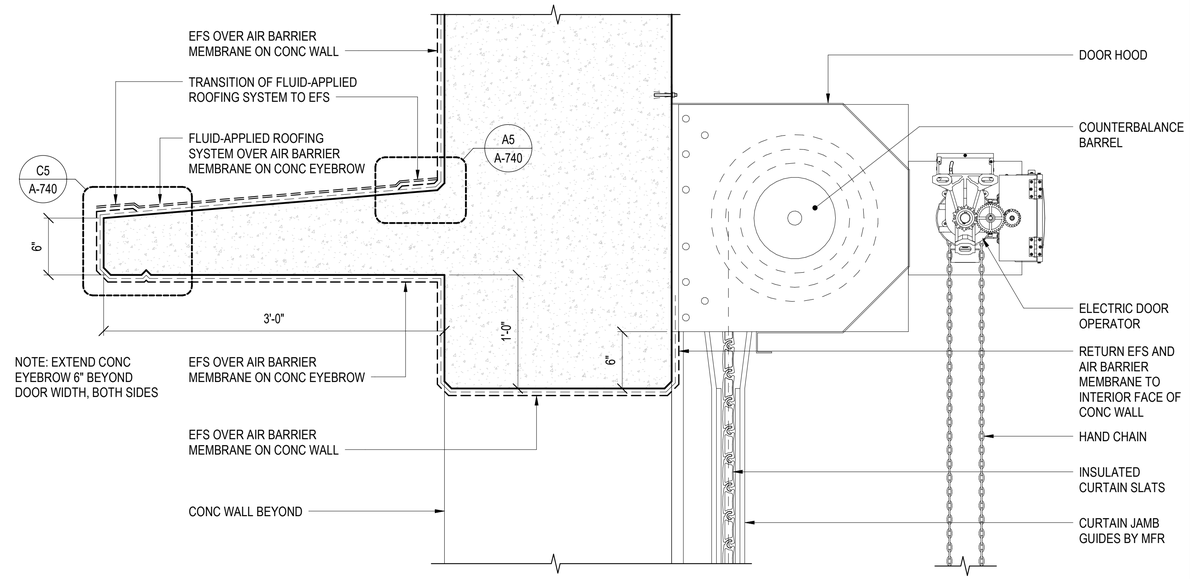

D3 OVERHEAD COILING DOOR HEAD DETAIL

SCALE: 1 1/2" = 1'-0"

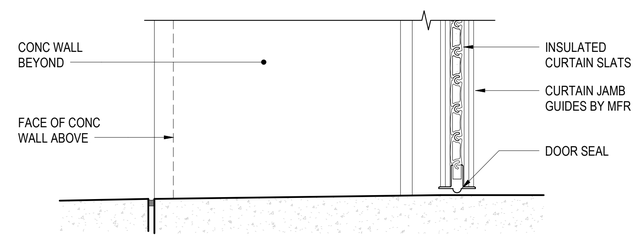

B4 OVERHEAD COILING DOOR THRESHOLD DETAIL

SCALE: 1 1/2" = 1'-0"

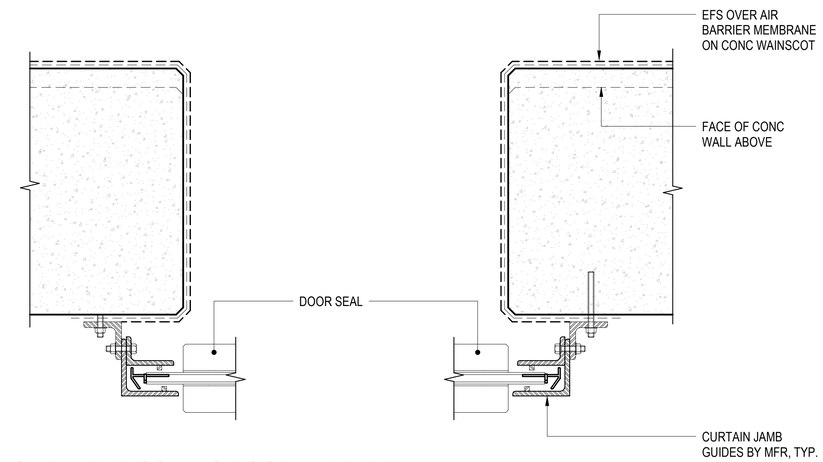

A4 OVERHEAD COILING DOOR JAMB DETAIL

SCALE: 1 1/2" = 1'-0"

GRAPHIC SCALE(S)

1 1/2" = 1' - 0" 0 3" 6" 9" 1' 2'

SYM	DESCRIPTION	DATE	APPR

NAVFAC

MYLES M. MICHIBATA LICENSED PROFESSIONAL ARCHITECT No. 12367 HAWAII, U.S.A.
LIC. EXP 04/30/26 SEAL

ASMD LLC. A/E INFO

APPROVED Evan Minzel
FOR COMMANDER NAVFAC

ACTIVITY: NATHANIEL PYRON, MILCON PLANNER, DPPH
SATISFACTORY TO DATE 3/10/2026
DES JG / RLB DRW RLB CHK JG
PM/DM DKS/DMK
BRANCH MANAGER KYM
CHIEF ENG/ARCH KYM
FIRE PROTECTION RYO

DEPARTMENT OF THE NAVY
NAVFAC PACIFIC
U.S. NAVSUPPACT
NAVAL FACILITIES ENGINEERING SYSTEMS COMMAND ~ PACIFIC
NAVAL FACILITIES ENGINEERING SYSTEMS COMMAND
MAKALAPA, HAWAII
MCB CAMP BLAZ, GUAM
JFY 2022 PROJECT J-875
BATTLE STAFF TRAINING FACILITY
DOOR DETAILS

SCALE: AS NOTED
EPROJECT NO.: 1696746
CONSTR. CONTR. NO.
NAVFAC DRAWING NO. 17321951
SHEET 155 OF 468
A-606

DRAWFORM REVISION: 25 AUGUST 2020

A-606
3/12/2026 9:12:53 PM
C:\Users\rbellmond\Documents\BLDG-875-1696746-A_rbellmondF4LVN.rvt

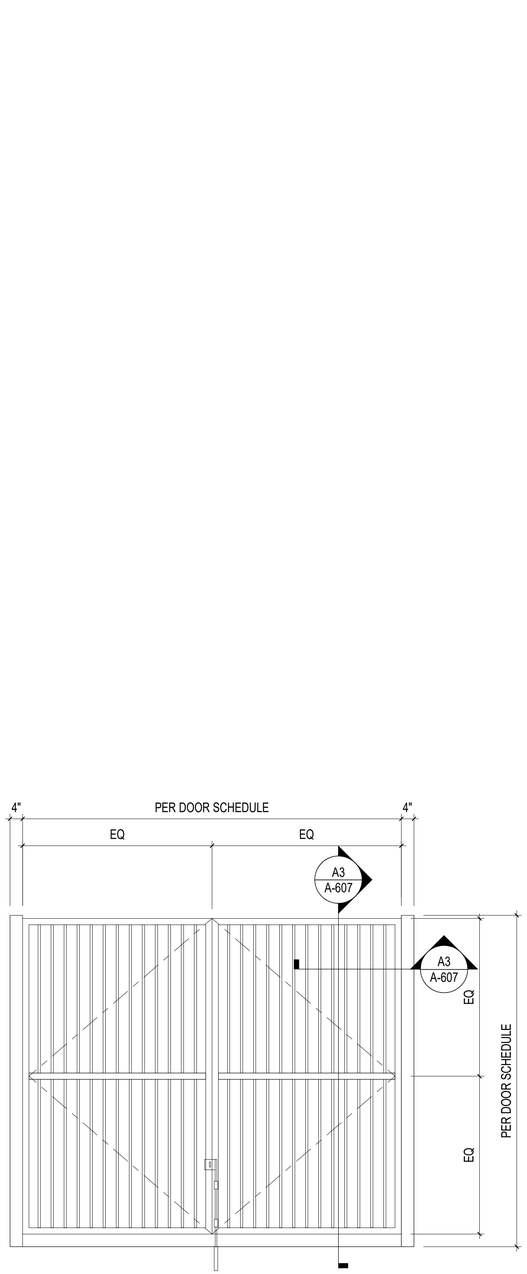

A2 EXT - GATE ELEVATION

SCALE: 1/2" = 1'-0"

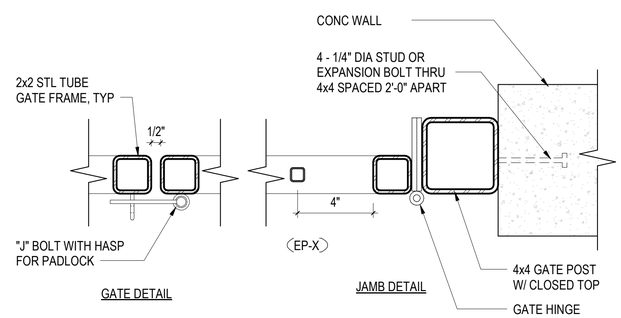

A3 EXT - GATE JAMB

SCALE: 3" = 1'-0" (A-607)

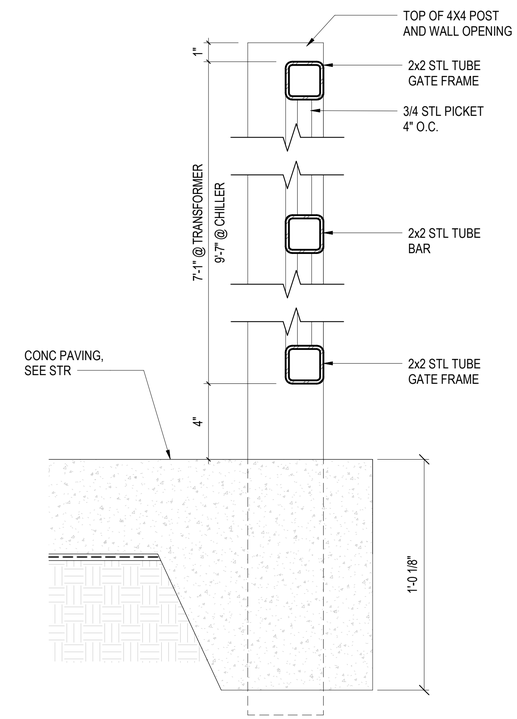

A5 EXT - GATE ELEVATION SECTION

SCALE: 3" = 1'-0"

GRAPHIC SCALE(S)

1/2" = 1' - 0" 0 6" 1' 2' 3' 4' 5'

3" = 1' - 0" 0 3" 6" 1'

SYM	DESCRIPTION	DATE	APPR

NAVFAC

MYLES M. MICHIBATA
LICENSED PROFESSIONAL ARCHITECT
No. 12367
HAWAII, U.S.A.
LIC. EXP 04/30/26 BEA.

AS MD LLC.
AE INFO

APPROVED
Evan Minge
FOR COMMANDER NAVFAC

ACTIVITY
NATHANIEL PYRON, MILCON PLANNER, DPPH
SATISFACTORY TO DATE 3/10/2026

DES JG / RLB	DRW RLB	CHK JG	
PM/DM	DKS/DMK		
BRANCH MANAGER	KYM		
CHIEF ENG/ARCH	KYM		
FIRE PROTECTION	RYO		

DEPARTMENT OF THE NAVY
NAVFAC PACIFIC
NAVAL FACILITIES ENGINEERING SYSTEMS COMMAND ~ PACIFIC
NAVAL FACILITIES ENGINEERING SYSTEMS COMMAND
MAKALAPA, HAWAII
U.S. NAVSUPPACT
MCB CAMP BLAZ, GUAM
JFY 2022 PROJECT J-875
BATTLE STAFF TRAINING FACILITY
GATE DETAILS

SCALE: AS NOTED
EPROJECT NO.: 1696746
CONSTR. CONTR. NO.
NAVFAC DRAWING NO. 17321952
SHEET 156 OF 468

A-607

DRAWFORM REVISION: 25 AUGUST 2020

3/12/2020 9:12:53 PM
A-607
C:\Users\rbellintona\Documents\BLDG-J875-1696746-A_rbellintonaFALVN.rvt

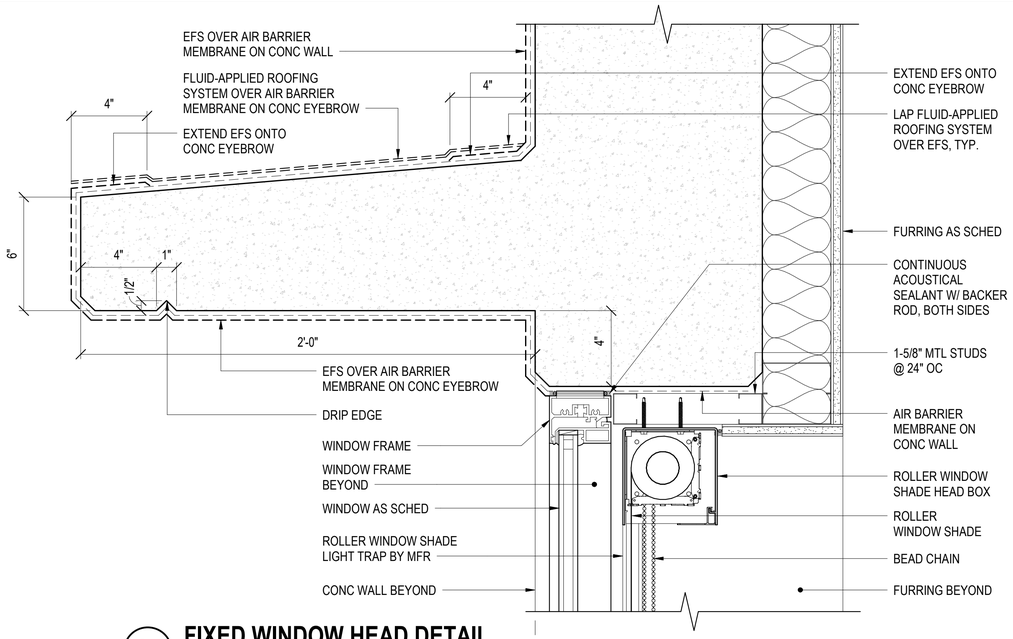

C2 FIXED WINDOW HEAD DETAIL

SCALE: 3" = 1'-0" (A-602)

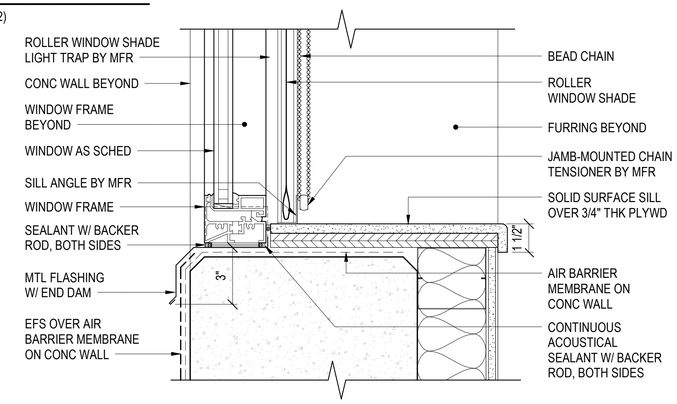

B2 FIXED WINDOW SILL DETAIL

SCALE: 3" = 1'-0" (A-602)

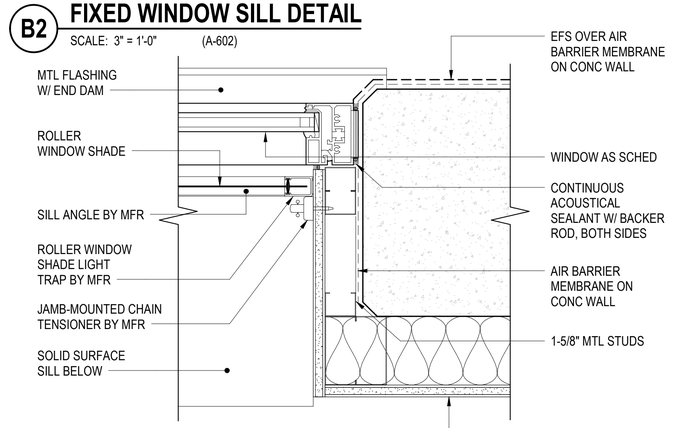

A2 FIXED WINDOW JAMB DETAIL

SCALE: 3" = 1'-0" (A-602)

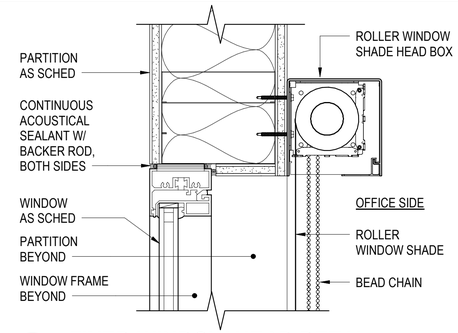

D4 FIXED WINDOW HEAD DETAIL

SCALE: 3" = 1'-0" (A-602)

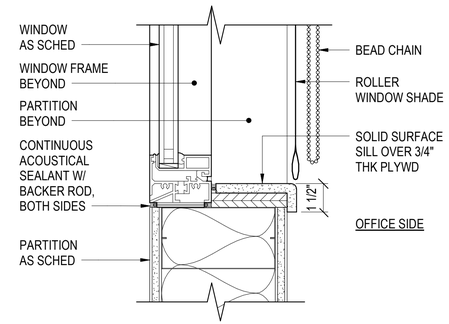

C4 FIXED WINDOW SILL DETAIL

SCALE: 3" = 1'-0" (A-602)

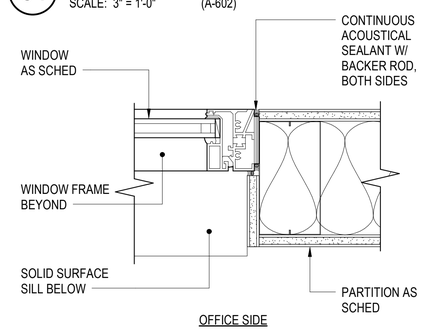

B4 FIXED WINDOW JAMB DETAIL

SCALE: 3" = 1'-0" (A-602)

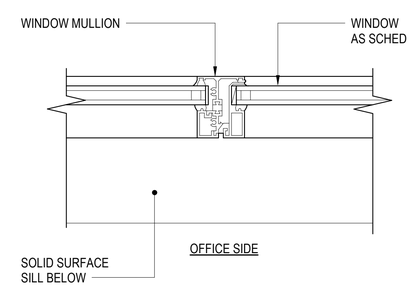

A4 FIXED WINDOW MULLION DETAIL

SCALE: 3" = 1'-0" (A-602)

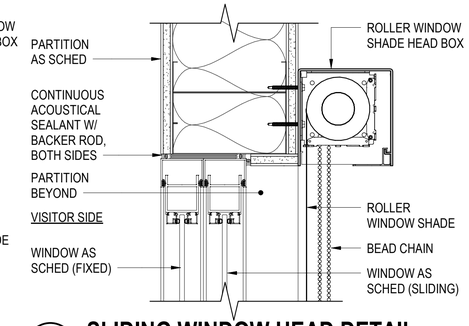

D5 SLIDING WINDOW HEAD DETAIL

SCALE: 3" = 1'-0" (A-602)

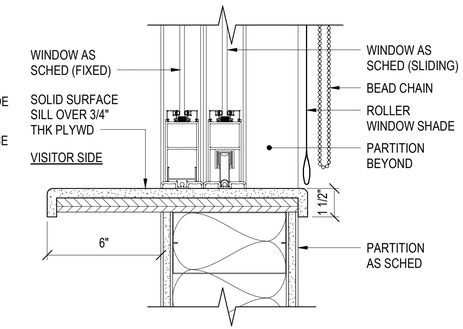

C5 SLIDING WINDOW SILL DETAIL

SCALE: 3" = 1'-0"

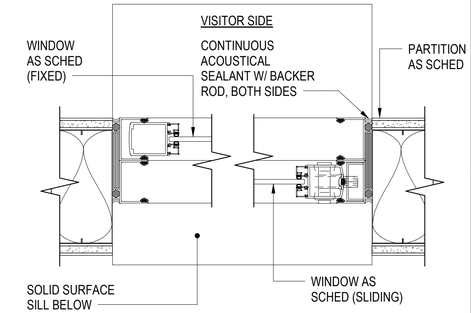

B5 SLIDING WINDOW JAMB DETAIL

SCALE: 3" = 1'-0" (A-602)

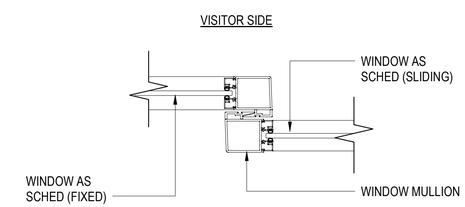

A5 SLIDING WINDOW MULLION DETAIL

SCALE: 3" = 1'-0" (A-602)

GRAPHIC SCALE(S)

3" = 1' - 0" 0 3" 6" 1'

SYM	DESCRIPTION	DATE	APPR

NAVFAC

MYLES M. MICHIBATA — LICENSED PROFESSIONAL ARCHITECT No. 12367 — HAWAII, U.S.A.
LIC. EXP 04/30/26 SEAL

ASMD LLC. A/E INFO

APPROVED
FOR COMMANDER NAVFAC

ACTIVITY: NATHANIEL PYRON, MILCON PLANNER, DPPH
SATISFACTORY TO DATE: 3/10/2026
DES: JG | DRW: RLB | CHK: JG
PM/DM: DKS/DMK
BRANCH MANAGER: KYM
CHIEF ENG/ARCH: KYM
FIRE PROTECTION: RYO

DEPARTMENT OF THE NAVY
NAVFAC PACIFIC
U.S. NAVSUPPACT
NAVAL FACILITIES ENGINEERING SYSTEMS COMMAND
NAVAL FACILITIES ENGINEERING SYSTEMS COMMAND – PACIFIC
MAKALAPA, HAWAII
MCB CAMP BLAZ, GUAM
JFY 2022 PROJECT J-875
BATTLE STAFF TRAINING FACILITY
WINDOW DETAILS

SCALE: AS NOTED
EPROJECT NO.: 1696746
CONSTR. CONTR. NO.
NAVFAC DRAWING NO. 17321953
SHEET 157 OF 468
A-608

DRAWFORM REVISION: 25 AUGUST 2020

3/12/2026 9:12:54 PM
C:\Users\Bellmond\Documents\BLDG-J875-1696746-A_chalintonsF4LVN.rvt
A-608

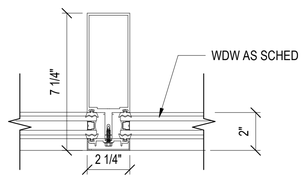

C2 STOREFRONT MULLION
SCALE: 3" = 1'-0" (A-602)

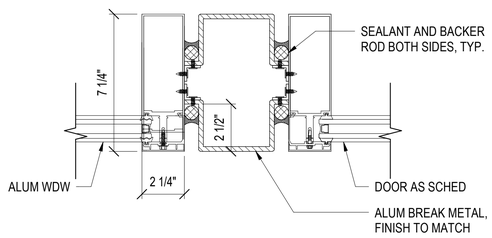

B2 STOREFRONT MULLION W/ BREAK METAL
SCALE: 3" = 1'-0" (A-602)

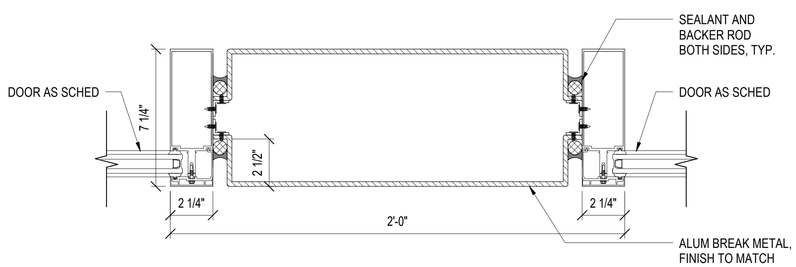

A1 STOREFRONT MULLION W/ BREAK METAL
SCALE: 3" = 1'-0" (A-602)

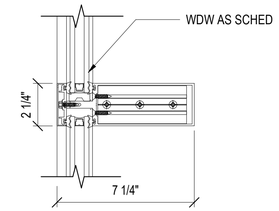

D3 STOREFRONT MULLION
SCALE: 3" = 1'-0" (A-602)

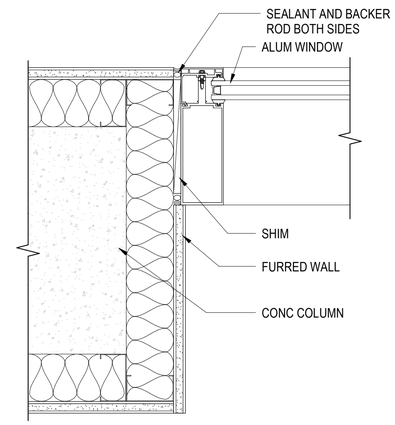

C3 STOREFRONT JAMB
SCALE: 3" = 1'-0" (A-602)

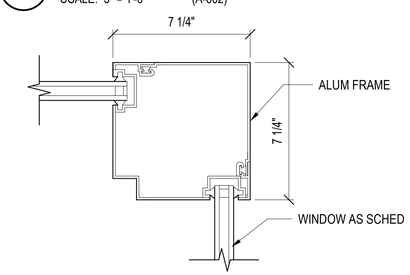

B3 STOREFRONT OUTSIDE CORNER
SCALE: 3" = 1'-0" (A-602)

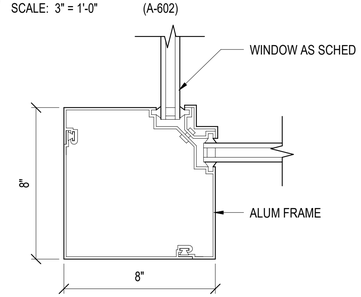

A3 STOREFRONT INSIDE CORNER
SCALE: 3" = 1'-0" (A-602)

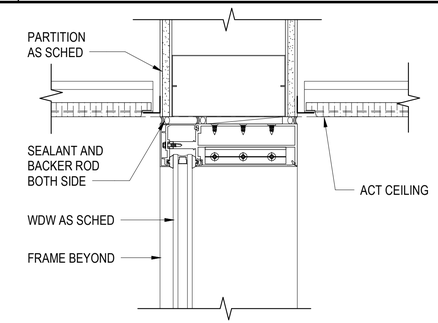

D4 STOREFRONT HEAD
SCALE: 3" = 1'-0" (A-602)

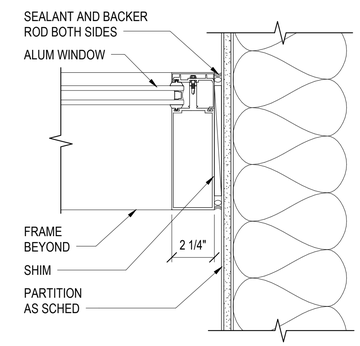

C4 STOREFRONT JAMB
SCALE: 3" = 1'-0"

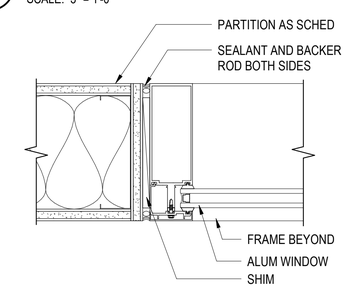

B4 STOREFRONT JAMB @ WALL
SCALE: 3" = 1'-0" (A-602)

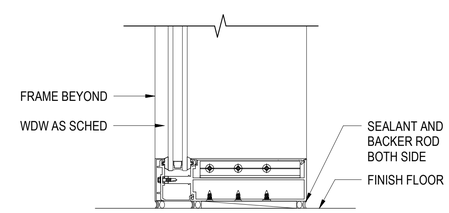

A4 STOREFRONT SILL
SCALE: 3" = 1'-0" (A-602)

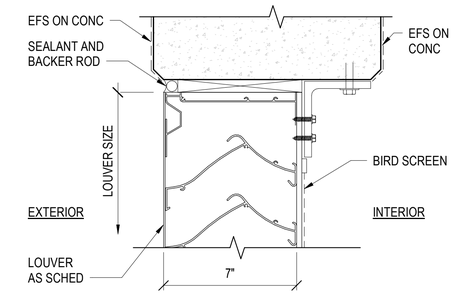

D5 LOUVER HEAD
SCALE: 3" = 1'-0" (A-602)

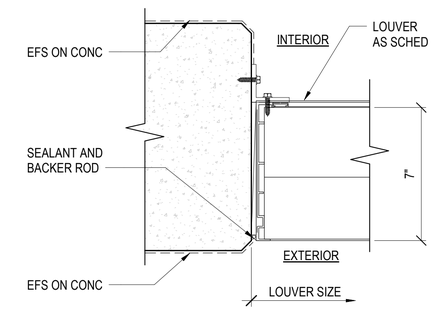

C5 LOUVER JAMB DETAIL
SCALE: 3" = 1'-0" (A-602)

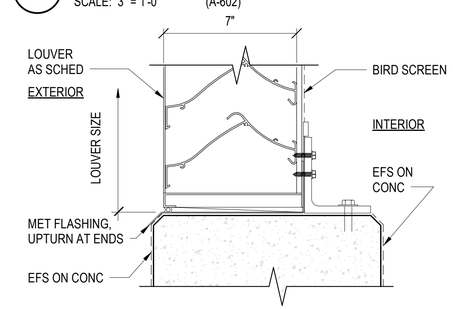

B5 MECH LOUVER SILL DETAIL @ CONC
SCALE: 3" = 1'-0" (A-602)

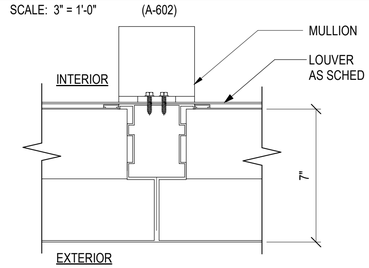

A5 MECH LOUVER MULLION DETAIL
SCALE: 3" = 1'-0" (A-602)

GRAPHIC SCALE(S)

3" = 1' - 0" 0 3" 6" 1'

SYM	DESCRIPTION	DATE	APPR

NAVFAC

MYLES M. MICHIBATA LICENSED PROFESSIONAL ARCHITECT No. 12367 HAWAII, U.S.A.
LIC. EXP 04/30/26 SEAL

AS MD LLC. A/E INFO

APPROVED Evan Moyer
FOR COMMANDER NAVFAC

ACTIVITY: NATHANIEL PYRON, MILCON PLANNER, DPPH
SATISFACTORY TO DATE 3/10/2026
DES JG / RLB DRW RLB CHK JG
PM/DM DKS/DMK
BRANCH MANAGER KYM
CHIEF ENG/ARCH KYM
FIRE PROTECTION RYO

DEPARTMENT OF THE NAVY
NAVFAC PACIFIC
U.S. NAVSUPPACT
NAVAL FACILITIES ENGINEERING SYSTEMS COMMAND
NAVAL FACILITIES ENGINEERING SYSTEMS COMMAND ~ PACIFIC
MAKALAPA, HAWAII
MCB CAMP BLAZ, GUAM
JFY 2022 PROJECT J-875
BATTLE STAFF TRAINING FACILITY
WINDOW DETAILS

SCALE: AS NOTED
EPROJECT NO.: 1696746
CONSTR. CONTR. NO.
NAVFAC DRAWING NO. 17321954
SHEET 158 OF 468
A-609

DRAWFORM REVISION: 25 AUGUST 2020

3/12/2026 9:12:55 PM
C:\Users\rlBallinton\Documents\BLDG-875-1696746-A_rballintonFaLVN.rvt
A-609

INTERIOR COLOR AND MATERIAL SCHEDULE

CODE	DESCRIPTION	MANUFACTURER	COLLECTION / STYLE / COLOR / FINISH	SIZE (W x H)	REMARKS
ACT-1	ACOUSTIC CEILING TILE	ARMSTRONG CEILINGS	CIRRUS ANGLED TEGULAR - WHITE 584, NRC: 0.70, CAC: 35	24" X 24" X 3/4"THK.	SUSPENSION SYSTEM TO BE 15/16"
AWP-1	ACOUSTIC WALL PANEL	KOROSEAL	SOUND DESIGNS PERFORMANCE PLUS SERIES ACOUSTICAL WALL PANELS, EDGE DETAIL TO BE HIGH PERFORMANCE TEXTILE: GUILFORD OF MAINE, STYLE: JANE 9085 COLOR: GOLD 4020	2-1/8" THK., WIDTH AND HEIGHT VARIES	SEE INTERIOR ELEVATIONS FOR SIZES AND LOCATIONS.
AWP-2	ACOUSTIC WALL PANEL	KOROSEAL	SOUND DESIGNS PERFORMANCE PLUS SERIES ACOUSTICAL WALL PANELS, EDGE DETAIL TO BE HIGH PERFORMANCE TEXTILE: GUILFORD OF MAINE, STYLE: METALLATION 5118, COLOR: DARK ANNEALED 1629	2-1/8" THK, WIDTH AND HEIGHT VARIES	SEE INTERIOR ELEVATIONS FOR SIZES AND LOCATIONS.
CG-1	CORNER GUARD	CONSTRUCTION SPECIALTIES (CS)	ACROVYN, SSM-20N-1/4" RADIUS, COLOR: PEARL - #934	2" X 2" X 48"H	SURFACE MOUNTED
CON-1	SEALED CONCRETE	TBD	BONDED ABRASIVE OIL RESISTANT NON-SLIP CONCRETE FINISH / CLEAR. SURFACE CUT DEPTH TO HAVE VERY LITTLE AGGREGATE EXPOSURE.	-	PROVIDE MINIMUM OF 3 COATS OF HARDENED, BREATHABLE STAIN RESISTANT SEALAR. PROVIDE MOCK-UP FOR APPROVAL BY GOVERNMENT PRIOR TO INSTALLATION.
ESD-1	ELECTROSTATIC DISPLACEMENT FLOORING	DUR-A-FLEX	ARMOR-STAT ESD EPOXY/URETHANE FLOOR SYSTEM, COLOR: SLATE GREY, STANDARD TEXTURE	-	-
GRT-1	GROUT	CUSTOM BUILDING PRODUCTS	BLEACHED WOOD #545	-	-
GRT-2	GROUT	CUSTOM BUILDING PRODUCTS	OYSTER GRAY #386	-	-
GRT-3	GROUT	CUSTOM BUILDING PRODUCTS	GRAYSTONE #542	-	-
P-1	PAINT	SHERWIN-WILLIAMS	PROMAR 200 ZERO VOC INTERIOR LATEX PAINT, DRIFT OF MIST - SW9166	-	WALL FIELD PAINT
P-2	PAINT	SHERWIN-WILLIAMS	PROMAR 200 ZERO VOC INTERIOR LATEX PAINT, DOVETAIL - SW7018	-	DOORS & FRAMES PAINT
P-3	PAINT	SHERWIN-WILLIAMS	PROMAR 200 ZERO VOC INTERIOR LATEX PAINT, FUTON - SW7101	-	CEILING PAINT
P-4	PAINT	SHERWIN-WILLIAMS	PROMAR 200 ZERO VOC INTERIOR LATEX PAINT, OAK CREEK - SW7718	-	ACCENT WALL PAINT
P-5	PAINT	SHERWIN-WILLIAMS	PROMAR 200 ZERO VOC INTERIOR LATEX PAINT, DECOROUS AMBER - SW0007	-	ACCENT WALL PAINT
PL-1	PLASTIC LAMINATE	WILSONART	HIGH-PRESSURE LAMINATE, WOODGRAINS, PORTICO TEAK IN LINEARITY FINISH - 8210K-18	-	-
PT-1	PORCELAIN TILE	DALTILE	STONE ATTACHE COLLECTION, COLORBODY PORCELAIN, HAUT MONDE, COLOR: ELITE GREY - HM05, FINISH: MATTE	12" X 24" X 5/16"THK.	GROUT USING GRT-2, USE MATCHING PORCELAIN TILE TRIM AS REQUIRED, GROUT JOINT TO BE 1/8" PER MANUFACTURER'S RECOMMENDATION, INSTALL IN VERTICAL STACK BOND PATTERN
PT-2	PORCELAIN TILE	DALTILE	COLORBODY PORCELAIN, IMAGICA, COLOR: HAZE - IG97, FINISH: MATTE	12" X 24" X 5/16"THK.	GROUT USING GRT-3, USE CRACK ISOLATION MEMBRANE, GROUT JOINT TO BE 1/8" PER MANUFACTURER'S RECOMMENDATION, INSTALL IN 1/3 OFFSET RUNNING BOND PATTERN, USE MATCHING PORCELAIN TILE TRIM AS REQUIRED
PT-3	PORCELAIN TILE	CASALGRANDE PADANA	FULLY VITRIFIED PORCELAIN, METROPOLIS, COLOR: MUD, FINISH: NATURAL, MATTE, R10	23.62" X 23.62" X 0.35"THK.	GROUT USING GRT-3, USE CRACK ISOLATION MEMBRANE, GROUT JOINT TO BE 1/8" PER MANUFACTURER'S RECOMMENDATION
PT-4	PORCELAIN TILE	CROSSVILLE	SHADES 2.0, SHD3 / .10103SMOS WHITES - SPO, BLENDED MOSAICS	1" X 3"	GROUT USING GRT-1
PT-5	PORCELAIN TILE	CROSSVILLE	SHADES 2.0, SHD2 / .10103SMOS COOL GRAYS - SPO, BLENDED MOSAICS	1" X 3"	GROUT USING GRT-1
RAF-1	RAISED ACCESS FLOORING - PT	TATE	CONCRE ALL STEEL ACCESS FLOOR PLANELS WITH FACTORY LAMINATED PORCELAIN TILE - CASALGRANDE, METROPOLIS, COLOR: MUD, FINISH: NATURAL	-	-
RAF-2	RAISED ACCESS FLOORING - CPT	TATE	CONCORE ALL STEEL ACCESS FLOOR PANELS WITH FACTORY INSTALLED CARPET POSITILES - SHAW CONTRACT, NOBLE MATERIALS, ALCHEMY TILE 5T135, CORNERSTONE COPPER 33555	-	-
RAF-3	RAISED ACCESS FLOORING - ESD	TATE	CONCORE ALL STEEL ACCESS FLOOR PANELS WITH FACTORY LAMINATED ESD VINYL TILE - FORBO, COLOREX SD, COLOR: 150206 MOONSTONE	-	-
RB-1	RUBBER BASE	JOHNSONITE BY TARKETT	COLOR: BURNT UMBER #63	4"H	STANDARD COVE AT RESILIENT FLOORING MATERIALS, NO-TOE AT CARPET, DO NOT USE CORNER PROFILES
SS-1	SOLID SURFACE	FORMICA	EVERFORM, COLOR: GRAY RENEW - 749	-	-
TP-1	TOILET PARTITION	BRADLEY	BRADMAR TOILET PARTITIONS, COLOR: CHARCOAL GRAY - S215	-	INCLUDE STAINLESS STEEL LATCH AND SHOES
WM-1	WALK-OFF MAT	CONSTRUCTION SPECIALTIES (CS)	PEDIMAT M1, HEAVY-DUTY CARPET WITH CLEAR ANODIZED ALUMINUM FRAME, COLOR: GRAPHITE - 9325	-	-
WS-1	WINDOW SHADE	MECHO SHADE	ECOVEIL 1550 SERIES, 3% OPENNESS, COLOR: EGGSHELL - 1566	VERIFY WINDOW SIZES	INSTALL AT WINDOW TYPES A, B1, B2 AND B3

GENERAL SHEET NOTES

1. FOR LOCATIONS OF MATERIALS, SEE ROOM FINISH SCHEDULE.
2. SEE SHEETS A-102, A-103, A-105 AND A-106 FOR CORNER GUARD LOCATIONS.
3. SOLID SURFACE BACKSPLASH TO BE FULL-HEIGHT BETWEEN COUNTERTOP AND UNDERSIDE OF UPPER CABINETRY. TYP. WHERE THERE IS NO UPPER CABINETRY, BACKSPLASH TO BE 12" ABOVE COUNTERTOP.
4. MANUFACTURER REFERENCES PROVIDE BASIS OF DESIGN FOR MATERIALS, COLORS, AND PATTERNS. PRODUCTS BY OTHER MANUFACTURERS MAY BE ACCEPTABLE, SUBJECT TO PROVIDING AN ACCEPTABLE MATCH AND DEMONSTRATING COMPLIANCE WITH CONTRACT REQUIREMENTS.

SYM	DESCRIPTION	DATE	APPR

LICENSED PROFESSIONAL ARCHITECT No. 12367 MYLES M. MICHIBATA HAWAII, U.S.A.
LIC. EXP 04/30/26

APPROVED
FOR COMMANDER NAVFAC
ACTIVITY
NATHANIEL PYRON, MILCON PLANNER, DPPH
SATISFACTORY TO DATE 3/10/2026
DES EA DRW EA CHK JG
PM/DM DKS/DMK
BRANCH MANAGER KYM
CHIEF ENG/ARCH KYM
FIRE PROTECTION RYO

DEPARTMENT OF THE NAVY
NAVAL FACILITIES ENGINEERING SYSTEMS COMMAND
NAVFAC PACIFIC
U.S. NAVSUPPACT
NAVAL FACILITIES ENGINEERING SYSTEMS COMMAND ~ PACIFIC
MAKALAPA, HAWAII
MCB CAMP BLAZ, GUAM
JFY 2022 PROJECT J-875
BATTLE STAFF TRAINING FACILITY
INTERIOR COLOR MATERIAL SCHEDULE

SCALE: AS NOTED
EPROJECT NO.: 1696746
CONSTR. CONTR. NO.
NAVFAC DRAWING NO. 17321955
SHEET 159 OF 468
A-610
DRAWFORM REVISION: 25 AUGUST 2020

A-610
3/12/2026 9:12:55 PM
C:\Users\BatimonaiDocuments\BLDG-3875-1696746-A_rhabitionaiF4LVN.rvt

EXTERIOR COLOR AND MATERIAL SCHEDULE

CODE	DESCRIPTION	MANUFACTURER	COLLECTION / STYLE / COLOR / FINISH	SIZE (W x H)	REMARKS
EF-1	EXTERIOR FINISH - FIELD, BODY 1	-	EXTERIOR FINISH SYSTEM, PAINT COLOR: TO MATCH BENJAMIN MOORE RICHMOND BISQUE HC-177	-	EXTERIOR FINISH SYSTEM IS TO BE APPLIED BEFORE PAINT.
EF-2	EXTERIOR FINISH - FIELD, BODY 2	-	EXTERIOR FINISH SYSTEM, PAINT COLOR: TO MATCH BENJAMIN MOORE PEANUT SHELL 2162-40	-	EXTERIOR FINISH SYSTEM IS TO BE APPLIED BEFORE PAINT.
EF-3	EXTERIOR FINISH - WAINSCOT AND SIGNAGES	-	EXTERIOR FINISH SYSTEM, PAINT COLOR: TO MATCH BENJAMIN MOORE NORTH CREEK BROWN 1001	-	EXTERIOR FINISH SYSTEM IS TO BE APPLIED TO WAINSCOT BEFORE PAINT.
EF-4	EXTERIOR FINISH - GUTTERS AND EYEBROWS	-	EXTERIOR FINISH SYSTEM, PAINT COLOR: TO MATCH BENJAMIN MOORE ESSEX GREEN HC-188, READY MIX	-	EXTERIOR FINISH SYSTEM IS TO BE APPLIED TO BEFORE PAINT.
EF-5	EXTERIOR FINISH - DOORS AND FRAMES	-	ANODIC COATING, FACTORY FINISH, COLOR: DARK BRONZE	-	-
EF-6	EXTERIOR FINISH - SIGNAGE	-	PAINT COLOR: TO MATCH FEDERAL STANDARD 595, COLOR 31400	-	-
EF-7	EXTERIOR FINISH - SIGNAGE	-	PAINT COLOR: TO MATCH FEDERAL STANDARD 595, COLOR 33696	-	-
EF-8	EXTERIOR FINISH - SIGNAGE	-	PAINT COLOR: TO MATCH BENJAMIN MOORE 1127, SEDONA BROWN	-	-
EF-9	EXTERIOR FINISH - SIGNAGE	-	PAINT COLOR: TO MATCH 110 VANDYK, SANDBLAST FINISH	-	-
RF-1	EXTERIOR FINISH - ROOF	-	FLUID-APPLIED ROOFING SYSTEM, COLOR: TO MATCH TOPCOAT COLOR CHART CHOCOLATE 2-400	-	-

GENERAL SHEET NOTES

1. FOR LOCATIONS OF MATERIALS, SEE ROOM FINISH SCHEDULE.
2. SEE SHEETS A-102, A-103, A-105 AND A-106 FOR CORNER GUARD LOCATIONS.
3. SOLID SURFACE BACKSPLASH TO BE FULL-HEIGHT BETWEEN COUNTERTOP AND UNDERSIDE OF UPPER CABINETRY. TYP. WHERE THERE IS NO UPPER CABINETRY, BACKSPLASH TO BE 12" ABOVE COUNTERTOP.
4. MANUFACTURER REFERENCES PROVIDE BASIS OF DESIGN FOR MATERIALS, COLORS, AND PATTERNS. PRODUCTS BY OTHER MANUFACTURERS MAY BE ACCEPTABLE, SUBJECT TO PROVIDING AN ACCEPTABLE MATCH AND DEMONSTRATING COMPLIANCE WITH CONTRACT REQUIREMENTS.

SYM	DESCRIPTION	DATE	APPR

NAVFAC

MYLES M. MICHIBATA
LICENSED PROFESSIONAL ARCHITECT
No. 12367
HAWAII, U.S.A.
LIC. EXP 04/30/26

ASMD LLC.
A/E INFO

APPROVED
Evan Mizel
FOR COMMANDER NAVFAC

ACTIVITY
NATHANIEL PYRON, MILCON PLANNER, DPPH

SATISFACTORY TO DATE 3/10/2026

DES RLB | DRW RLB | CHK JG
PM/DM DKS/DMK
BRANCH MANAGER KYM
CHIEF ENG/ARCH KYM
FIRE PROTECTION RYO

DEPARTMENT OF THE NAVY
NAVAL FACILITIES ENGINEERING SYSTEMS COMMAND
NAVFAC PACIFIC
NAVAL FACILITIES ENGINEERING SYSTEMS COMMAND ~ PACIFIC
MAKALAPA, HAWAII
U.S. NAVSUPPACT
MCB CAMP BLAZ, GUAM
JFY 2022 PROJECT J-875
BATTLE STAFF TRAINING FACILITY
EXTERIOR COLOR MATERIAL SCHEDULE

SCALE: AS NOTED
EPROJECT NO.: 1696746
CONSTR. CONTR. NO.
NAVFAC DRAWING NO.
17321956
SHEET 160 OF 468

A-611

DRAWFORM REVISION: 25 AUGUST 2020

3/12/2026 9:12:55 PM A-611
C:\Users\BatimonaiDocuments\BLDG-3875-1696746-A_rhabintionaF4LVN.rvt

ROOM FINISH SCHEDULE

ROOM NUMBER	ROOM NAME	FLOOR	BASE	WALLS A	WALLS B	WALLS C	WALLS D	CEILING MATERIAL	CEILING FINISH	MILLWORK COUNTERTOP	MILLWORK CABINETS	INTERIOR DOORS DOOR	INTERIOR DOORS FRAME	REMARKS
FIRST FLOOR														
101	ENTRY VESTIBULE	PT-2	RB-1	P-1B	P-1B	P-1B	P-1B	ACT	ACT-1	-	-	-	-	RECESSED WALK-OFF MAT TO BE INSTALLED ADJACENT TO ENTRY DOORS. REFER TO FLOOR FINISH PLAN.
102	TA - HQ CAMP COMMANDANT	RAF-2	RB-1	P-1B	P-1B	P-1B	P-1B / AWP-2	ACT	ACT-1	-	-	P-2C	P-2C	-
102A	ENTRY CONTROL POINT	PT-2	RB-1	P-1B / AWP-2	P-1B	P-1B	P-1B	ACT	ACT-1	-	-	-	-	-
103	BREAK RM	PT-2	RB-1	P-5C	P-1C	P-1C	P-1C	ACT	ACT-1	SS-1	PL-1	P-2C	P-2C	-
104	NURSING RM	PT-2	RB-1	P-1B	P-4B	P-1B	P-1B	ACT	ACT-1	SS-1	PL-1	P-2C	P-2C	-
105A	TA - G3 FOPS	RAF-2	RB-1	P-4B / AWP-1	P-1B / AWP-1	P-1B	P-1B	ACT	ACT-1	-	-	P-2C	P-2C	-
105B	TA - G3 FOPS	RAF-2	RB-1	P-4B / AWP-1	P-1B	P-1B	P-1B / AWP-1	ACT	ACT-1	-	-	P-2C	P-2C	-
106	TA - G7 COMM STRAT	RAF-2	RB-1	P-1B / AWP-1	P-4B / AWP-1	P-1B / AWP-1	P-1B	ACT	ACT-1	-	-	P-2C	P-2C	-
107	TA - G4 LOGISTICS	RAF-2	RB-1	P-1B / AWP-1	P-1B	P-1B	P-4B / AWP-1	ACT	ACT-1	-	-	P-2C	P-2C	-
108A	TA - G2 COLLECTIONS AND ANALYSIS	RAF-2	RB-1	P-1B / AWP-1	P-1B	P-1B	P-4B / AWP-1	ACT	ACT-1	-	-	P-2C	P-2C	-
108B	TA - G2 COLLECTIONS AND ANALYSIS	RAF-2	RB-1	P-1B	P-1B	P-1B / AWP-1	P-4B / AWP-1	ACT	ACT-1			P-2C	P-2C	-
109	INTERIOR COC TRAINING PAD	CON-1	RB-1	P-1B	P-1B	P-1B	P-1B	EXP.	P-3A	-	-	P-2C	P-2C	-
110A	TA - G3 STRIKE CELL	RAF-2	RB-1	P-1B / AWP-1	P-4B / AWP-1	P-1B	P-1B	ACT	ACT-1	-	-	P-2C	P-2C	-
110B	TA - G3 STRIKE CELL	RAF-2	RB-1	P-1B	P-4B / AWP-1	P-1B / AWP-1	P-1B	ACT	ACT-1	-	-	P-2C	P-2C	-
112	ELEC CLOSET	RAF-3	RB-1	P-1B	P-1B	P-1B	P-1B	EXP.	P-3A	-	-	P-2C	P-2C	-
113	TA - G3 FIRES	RAF-2	RB-1	P-1B / AWP-1	P-4B / AWP-1	P-1B / AWP-1	P-1B	ACT	ACT-1	-	-	P-2C	P-2C	-
114	SVTC CONF RM / SIPR CAFE	RAF-2	RB-1	P-1B / AWP-1	P-1B / AWP-1	P-4B / AWP-1	P-1B	ACT	ACT-1	-	-	P-2C	P-2C	-
115	GTR 1	RAF-3	RB-1	P-1B	P-1B	P-1B	P-1B	EXP.	P-3A	-	-	P-2C	P-2C	-
116	GTR 1T (TRAINING TELECOMM RM)	RAF-3	RB-1	P-1B	P-1B	P-1B	P-1B	EXP.	P-3A	-	-	P-2C	P-2C	-
117	ELEV MACHINE RM	CON-1	RB-1	P-1B	P-1B	P-1B	P-1B	EXP.	P-3A	-	-	P-2C	P-2C	-
118	CTR 1	ESD-1	RB-1	P-1B	P-1B	P-1B	P-1B	EXP.	P-3A	-	-	P-2C	P-2C	-
119	MECH RM	CON-1	RB-1	P-1B / AWP-2	P-1B / AWP-2	P-1B / AWP-2	P-1B / AWP-2	EXP.	P-3A	-	-	P-2C	P-2C	-
119A	CHILLER ENCLOSURE	CON-1	RB-1	P-1B	P-1B	P-1B	P-1B	EXP.	P-3A	-	-	P-2C	P-2C	-
120	ELEC RM	CON-1	RB-1	P-1B / AWP-2	P-1B / AWP-2	P-1B / AWP-2	P-1B / AWP-2	EXP.	P-3A	-	-	P-2C	P-2C	-
121	MEN	PT-1	PT-1 COVE BASE	PT-1	PT-1	PT-1 / PT-5	PT-1	GYP.	P-3A	SS-1	-	P-2C	P-2C	-
122	JAN	CON-1	-	PT-1 / P-1C	PT-1 / P-1C	PT-1 / P-1C	PT-1 / P-1C	GYP.	P-3A	-	-	P-2C	P-2C	-
122A	UTILITY CHASE	-	-	-	-	-	-	-	-	-	-	-	-	-
123	WOMEN	PT-1	PT-1 COVE BASE	PT-1 / PT-4	PT-1	PT-1	PT-1	GYP.	P-3A	SS-1	-	P-2C	P-2C	-
124	TRAINING MATERIAL STORAGE	PT-2	RB-1	P-1B	P-1B	P-1B	P-1B	EXP.	P-3A	-	-	P-2C	P-2C	-
125	TA - MEDICAL CELL	PT-2	RB-1	P-1B	P-1B	P-1B	P-1B / AWP-2	ACT	ACT-1	-	-	P-2C	P-2C	-
125A	OFFICE	PT-2	RB-1	P-1B	P-1B	P-1B	P-4B	ACT	ACT-1	-	-	P-2C	P-2C	-
126	TA - COC WATCH FLOOR	RAF-2	RB-1	P-1B	P-1B	P-1B	P-1B	ACT	ACT-1	SS-1	PL-1	P-2C	P-2C	-
126A	OFFICE	RAF-2	RB-1	P-1B	P-4B	P-1B	P-1B	ACT	ACT-1	-	-	P-2C	P-2C	-
126B	OFFICE	RAF-2	RB-1	P-1B	P-4B	P-1B	P-1B	ACT	ACT-1	-	-	P-2C	P-2C	-
126C	TELCOM CLOSET	RAF-3	RB-1	P-1B	P-1B	P-1B	P-1B	EXP.	P-3A	-	-	P-2C	P-2C	-
126D	AV CLOSET	RAF-3	RB-1	P-1B	P-1B	P-1B	P-1B	EXP.	P-3A	-	-	P-2C	P-2C	-
127	TA - COMMAND DECK	RAF-2	RB-1	P-1B / AWP-2	P-1B / AWP-2	P-1B / AWP-2	P-1B / AWP-2	ACT	ACT-1	-	-	P-2C	P-2C	-
127A	OFFICE	RAF-2	RB-1	P-1B	P-1B	P-4B	P-1B	ACT	ACT-1	-	-	P-2C	P-2C	-
127B	OFFICE	RAF-2	RB-1	P-1B	P-1B	P-4B	P-1B	ACT	ACT-1	-	-	P-2C	P-2C	-
128	TA - G1 OPERATIONS	RAF-2	RB-1	P-1B / AWP-2	P-1B / AWP-2	P-1B	P-1B	ACT	ACT-1	-	-	P-2C	P-2C	-
128A	OFFICE	RAF-2	RB-1	P-1B	P-1B	P-4B	P-1B	ACT	ACT-1	-	-	P-2C	P-2C	-
128B	OFFICE	RAF-2	RB-1	P-1B	P-1B	P-4B	P-1B	ACT	ACT-1	-	-	P-2C	P-2C	-
128C	TELCOM CLOSET	RAF-3												
129	TA - G5 PLANS	RAF-2	RB-1	P-1B / AWP-1	P-1B / AWP-1	P-1B / AWP-1	P-1B	ACT	ACT-1	-	-	P-2C	P-2C	-
130	EMERGENCY GENERATOR	CON-1	RB-1	P-1B / AWP-2	P-1B / AWP-2	P-1B / AWP-2	P-1B / AWP-2	GYP.	P-3A	-	-	P-2C	P-2C	-
C1A	CORRIDOR 1A	RAF-1	RB-1	P-1B	P-1B	P-1B	P-1B	ACT	ACT-1	-	-	P-2C	P-2C	-
C1B	CORRIDOR 1B	RAF-1	RB-1	P-1B	P-1B	P-1B	P-1B	ACT	ACT-1	-	-	P-2C	P-2C	-
C1C	CORRIDOR 1C	RAF-1	RB-1	P-1B	P-1B	P-1B	P-1B	ACT	ACT-1	-	-	P-2C	P-2C	-
C1D	CORRIDOR 1D	PT-3	RB-1	P-1B	P-1B	P-1B	P-1B	ACT	ACT-1	-	-	P-2C	P-2C	-
C1E	CORRIDOR 1E	PT-3	RB-1	P-1B	P-1B	P-1B	P-1B	ACT	ACT-1	-	-	P-2C	P-2C	-
E1	ELEV 1	PT-3	-	-	-	-	-	-	-	-	-	-	-	INTERIOR FINISHES TO BE PER ELEVATOR CAB MANUFACTURER STANDARDS, COORDINATE (OR MATCH) WITH FINISH PALETTE, ELEVATOR DOORS TO BE FACTORY FINISHED IN MANUFACTURER STANDARDS
L1	LOBBY 1	PT-3	RB-1	P-1B	P-1B	P-1B	P-1B	ACT / GYP.	ACT-1 / P-3A	-	-	-	-	-
S1A	STAIR 1A	CON-1	RB-1	P-1B	P-1B	P-1B	P-1B	EXP.	P-3A	-	-	P-2C	P-2C	-
S1B	STAIR 1B	CON-1	RB-1	P-1B	P-1B	P-1B	P-1B	EXP.	P-3A	-	-	P-2C	P-2C	-
S1C	STAIR 1C	CON-1	RB-1	P-1B	P-1B	P-1B	P-1B	EXP.	P-3A	-	-	P-2C	P-2C	-
V1A	VESTIBULE 1A	PT-3	RB-1	P-1B	P-1B	P-1B	P-1B	ACT	ACT-1	-	-	P-2C	P-2C	RECESSED WALK-OFF MAT TO BE INSTALLED ADJACENT TO ENTRY DOORS. REFER TO FLOOR FINISH PLAN.
V1B	VESTIBULE 1B	CON-1	RB-1	P-1B	P-1B	P-1B	P-1B	EXP.	P-3A	-	-	P-2C	P-2C	RECESSED WALK-OFF MAT TO BE INSTALLED ADJACENT TO ENTRY DOORS. REFER TO FLOOR FINISH PLAN.
V1C	VESTIBULE 1C	PT-3	RB-1	P-1B	P-1B	P-1B	P-1B	ACT	ACT-1	-	-	P-2C	P-2C	RECESSED WALK-OFF MAT TO BE INSTALLED ADJACENT TO ENTRY DOORS. REFER TO FLOOR FINISH PLAN.
V1D	VESTIBULE 1D	PT-3	RB-1	P-1B	P-1B	P-1B	P-1B	ACT	ACT-1	-	-	P-2C	P-2C	RECESSED WALK-OFF MAT TO BE INSTALLED ADJACENT TO ENTRY DOORS. REFER TO FLOOR FINISH PLAN.
V1E	VESTIBULE 1E	PT-3	RB-1	P-1B	P-1B	P-1B	P-1B	ACT	ACT-1	-	-	P-2C	P-2C	RECESSED WALK-OFF MAT TO BE INSTALLED ADJACENT TO ENTRY DOORS. REFER TO FLOOR FINISH PLAN.

GENERAL SHEET NOTES

1. REFER TO SHEETS A-102, A-103, A-105 AND A-106 FOR ALL CORNER GUARD LOCATIONS.

PAINTING NOTES

SOLID PAINTS: THE COLOR SCHEDULE UTILIZED SHERWIN WILLIAMS COMPANY AS A BASIS FOR COLOR SELECTION. PAINT COLORS ARE INDICATED BY A NUMERICAL VALUE. THE SHEEN LEVEL IS INDICATED BY AN ALPHABET LETTER, AS DESCRIBED BELOW:

A - FLAT / MATTE
B - EGGSHELL
C - SEMI-GLOSS
B - FULL-GLOSS

SYM	DESCRIPTION	DATE	APPR

NAVFAC

MYLES M. MICHIBATA LICENSED PROFESSIONAL ARCHITECT No. 12367 HAWAII, U.S.A.
LIC. EXP 04/30/26

ASMD LLC. A/E INFO

APPROVED
FOR COMMANDER NAVFAC

ACTIVITY
NATHANIEL PYRON, MILCON PLANNER, DPPH
SATISFACTORY TO DATE 3/10/2026
DES EA DRW RLB CHK JG
PM/DM DKS/DMK
BRANCH MANAGER KYM
CHIEF ENG/ARCH KYM
FIRE PROTECTION RYO

DEPARTMENT OF THE NAVY
NAVAL FACILITIES ENGINEERING SYSTEMS COMMAND
NAVFAC PACIFIC
U.S. NAVSUPPACT
NAVAL FACILITIES ENGINEERING SYSTEMS COMMAND ~ PACIFIC
MAKALAPA, HAWAII
MCB CAMP BLAZ, GUAM
JFY 2022 PROJECT J-875
BATTLE STAFF TRAINING FACILITY
ROOM FINISH SCHEDULE

SCALE: AS NOTED
EPROJECT NO.: 1696746
CONSTR. CONTR. NO.
NAVFAC DRAWING NO. 17321957
SHEET 161 OF 468
A-612

DRAWFORM REVISION: 25 AUGUST 2020

3/12/2026 9:12:56 PM A-612
C:\Users\rbellamond\Documents\BLDG-J875-1696746-A_rbellamondFALVN.rvt

ROOM FINISH SCHEDULE

ROOM NUMBER	ROOM NAME	FLOOR	BASE	WALLS A	WALLS B	WALLS C	WALLS D	CEILING MATERIAL	CEILING FINISH	MILLWORK COUNTERTOP	MILLWORK CABINETS	INTERIOR DOORS DOOR	INTERIOR DOORS FRAME	REMARKS
SECOND FLOOR														
201	BREAK RM	PT-2	RB-1	P-5C	P-1C	P-1C	P-1C	ACT	ACT-1	SS-1	PL-1	P-2C	P-2C	-
202	PRINT RM	PT-2	RB-1	P-1B / AWP-2	P-1B / AWP-2	P-1B / AWP-2	P-1B / AWP-2	ACT	ACT-1	-	-	P-2C	P-2C	-
203	TECG - ADMIN CELL AND LOGISTICS SECTION	RAF-2	RB-1	P-1B / AWP-2	P-1B / AWP-2	P-1B / AWP-2	P-1B / AWP-2	ACT	ACT-1	-	-	P-2C	P-2C	-
204	ELEC CLOSET	RAF-3	RB-1	P-1B	P-1B	P-1B	P-1B	EXP.	P-3A	-	-	P-2C	P-2C	-
205A	INTEL CONTROL CELL	RAF-2	RB-1	P-4B / AWP-1	P-1B / AWP-1	P-1B / AWP-1	P-1B	ACT	ACT-1	-	-	P-2C	P-2C	-
205B	INTEL CONTROL CELL	RAF-2	RB-1	P-4B / AWP-1	P-1B	P-1B / AWP-1	P-1B / AWP-1	ACT	ACT-1	-	-	P-2C	P-2C	-
206A	OPPOSING FORCES CONTROL CELL	RAF-2	RB-1	P-4B / AWP-1	P-1B / AWP-1	P-1B / AWP-1	P-1B	ACT	ACT-1	-	-	P-2C	P-2C	-
206B	OPPOSING FORCES CONTROL CELL	RAF-2	RB-1	P-4B / AWP-1	P-1B	P-1B / AWP-1	P-1B / AWP-1	ACT	ACT-1	-	-	P-2C	P-2C	-
207	TA - G9 EXPERIMENTATION	RAF-2	RB-1	P-1B / AWP-1	P-1B / AWP-1	P-4B / AWP-1	P-1B / AWP-1	ACT	ACT-1	-	-	P-2C	P-2C	-
208A	TA - TECHCON	RAF-2	RB-1	P-1B / AWP-1	P-1B / AWP-1	P-1B	P-4B / AWP-1	ACT	ACT-1	-	-	P-2C	P-2C	-
208B	TA - TECHCON	RAF-2	RB-1	P-1B	P-1B / AWP-1	P-1B / AWP-1	P-4B / AWP-1	ACT	ACT-1	-	-	P-2C	P-2C	-
209	SIM TECH CONTROL JLVC / MCVP	RAF-2	RB-1	P-1B / AWP-2	P-1B / AWP-2	P-1B / AWP-2	P-1B / AWP-2	ACT	ACT-1	-	-	P-2C	P-2C	-
210	TRAINING MATERIAL STORAGE	RAF-1	RB-1	P-1B	P-1B	P-1B	P-1B	EXP.	P-3A	-	-	P-2C	P-2C	-
211	TECG OFFICE / CONF RM	RAF-2	RB-1	P-1B	P-1B / AWP-2	P-1B	P-1B	ACT	ACT-1	-	-	P-2C	P-2C	-
211A	CONF RM	RAF-2	RB-1	P-1B	P-1B / AWP-1	P-1B / AWP-1	P-4B / AWP-1	ACT	ACT-1	-	-	P-2C	P-2C	-
211B	OFFICE	RAF-2	RB-1	P-1B	P-4B	P-1B	P-1B	ACT	ACT-1	-	-	P-2C	P-2C	-
211C	OFFICE	RAF-2	RB-1	P-1B	P-4B	P-1B	P-1B	ACT	ACT-1	-	-	P-2C	P-2C	-
211D	OFFICE	RAF-2	RB-1	P-1B	P-4B	P-1B	P-1B	ACT	ACT-1	-	-	P-2C	P-2C	-
211E	OFFICE	RAF-2	RB-1	P-4B	P-1B	P-1B	P-1B	ACT	ACT-1	-	-	P-2C	P-2C	-
211F	OFFICE	RAF-2	RB-1	P-4B	P-1B	P-1B	P-1B	ACT	ACT-1	-	-	P-2C	P-2C	-
212	SVTC CONF RM / SIPR CAFE	RAF-2	RB-1	P-1B / AWP-1	P-1B / AWP-1	P-4B / AWP-1	P-1B	ACT	ACT-1	-	-	P-2C	P-2C	-
213	GTR 2	RAF-3	RB-1	P-1B	P-1B	P-1B	P-1B	EXP.	P-3A	-	-	P-2C	P-2C	-
214	GTR 2T (TRAINING TELECOMM RM)	RAF-3	RB-1	P-1B	P-1B	P-1B	P-1B	EXP.	P-3A	-	-	P-2C	P-2C	-
215	STORAGE	PT-3	RB-1	P-1B	P-1B	P-1B	P-1B	EXP.	P-3A	-	-	P-2C	P-2C	-
216	CTR 2	ESD-1	RB-1	P-1B	P-1B	P-1B	P-1B	EXP.	P-3A	-	-	P-2C	P-2C	-
217	MECH RM	CON-1	RB-1	P-1B / AWP-2	P-1B / AWP-2	P-1B / AWP-2	P-1B / AWP-2	EXP.	P-3A	-	-	P-2C	P-2C	-
218	TRAINING MATERIAL STORAGE	PT-3	RB-1	P-1B	P-1B	P-1B	P-1B	EXP.	P-3A	-	-	P-2C	P-2C	-
219	MEN	PT-1	PT-1 COVE BASE	PT-1	PT-1	PT-1 / PT-5	PT-1	GYP.	P-3A	SS-1	-	P-2C	P-2C	-
220	JAN	CON-1	-	PT-1 / P-1C	PT-1 / P-1C	PT-1 / P-1C	PT-1 / P-1C	GYP.	P-3A	-	-	P-2C	P-2C	-
220A	UTILITY CHASE	-	-	-	-	-	-	-	-	-	-	-	-	-
221	WOMEN	PT-1	PT-1 COVE BASE	PT-1 / PT-4	PT-1	PT-1	PT-1	GYP.	P-3A	SS-1	-	P-2C	P-2C	-
222	TA - G6 PRIMARY	PT-2	RB-1	P-1B	P-1B / AWP-1	P-4B / AWP-1	P-1B / AWP-1	ACT	ACT-1	-	-	P-2C	P-2C	-
223	ELEC CLOSET	ESD-1	RB-1	P-1B	P-1B	P-1B	P-1B	EXP.	P-3A	-	-	P-2C	P-2C	-
224	HHQ RESPONSE CELL	RAF-2	RB-1	P-1B / AWP-1	P-1B / AWP-1	P-4B / AWP-1	P-1B / AWP-1	ACT	ACT-1	-	-	P-2C	P-2C	-
225A	TECG INTEL SECTION AND RED CELL	RAF-2	RB-1	P-1B	P-1B / AWP-1	P-4B / AWP-1	P-1B	ACT	ACT-1	-	-	P-2C	P-2C	-
225B	TECG INTEL SECTION AND RED CELL	RAF-2	RB-1	P-1B	P-1B	P-4B / AWP-1	P-1B / AWP-1	ACT	ACT-1	-	-	P-2C	P-2C	-
226A	BLUE / GREEN FORCES CONTROL CELL	RAF-2	RB-1	P-4B / AWP-1	P-1B / AWP-1	P-1B / AWP-1	P-1B	ACT	ACT-1	-	-	P-2C	P-2C	-
226B	BLUE / GREEN FORCES CONTROL CELL	RAF-2	RB-1	P-4B / AWP-1	P-1B	P-1B / AWP-1	P-1B / AWP-1	ACT	ACT-1	-	-	P-2C	P-2C	-
227A	JFACC / AVIATION OPS CENTER	RAF-2	RB-1	P-4B / AWP-1	P-1B / AWP-1	P-1B / AWP-1	P-1B	ACT	ACT-1	-	-	P-2C	P-2C	-
227B	JFACC / AVIATION OPS CENTER	RAF-2	RB-1	P-4B / AWP-1	P-1B	P-1B / AWP-1	P-1B / AWP-1	ACT	ACT-1	-	-	P-2C	P-2C	-
C2A	CORRIDOR 2A	RAF-1	RB-1	P-1B	P-1B	P-1B	P-1B	ACT	ACT-1	-	-	P-2C	P-2C	-
C2B	CORRIDOR 2B	RAF-1	RB-1	P-1B	P-1B	P-1B	P-1B	ACT	ACT-1	-	-	P-2C	P-2C	-
C2C	CORRIDOR 2C	RAF-1	RB-1	P-1B	P-1B	P-1B	P-1B	ACT	ACT-1	-	-	P-2C	P-2C	-
C2D	CORRIDOR 2D	PT-3	RB-1	P-1B	P-1B	P-1B	P-1B	ACT	ACT-1	-	-	P-2C	P-2C	-
E2	ELEV 2	PT-3	-	-	-	-	-	-	-	-	-	-	-	INTERIOR FINISHES TO BE PER ELEVATOR CAB MANUFACTURER STANDARDS, COORDINATE (OR MATCH) WITH FINISH PALETTE, ELEVATOR DOORS TO BE FACTORY FINISHED IN MANUFACTURER STANDARDS
L2	LOBBY 2	PT-3	RB-1	P-1B	P-1B	P-1B	P-1B	ACT / GYP.	ACT-1 / P-3A	-	-	-	-	-
S2A	STAIR 2A	CON-1	RB-1	P-1B	P-1B	P-1B	P-1B	EXP.	P-3A	-	-	P-2C	P-2C	-
S2B	STAIR 2B	CON-1	RB-1	P-1B	P-1B	P-1B	P-1B	EXP.	P-3A	-	-	P-2C	P-2C	-
S2C	STAIR 2C	CON-1	RB-1	P-1B	P-1B	P-1B	P-1B	EXP.	P-3A	-	-	P-2C	P-2C	-
V2	VESTIBULE 2	PT-3	RB-1	P-1B	P-1B	P-1B	P-1B	ACT	ACT-1	-	-	P-2C	P-2C	-

GENERAL SHEET NOTES

1. REFER TO SHEETS A-102, A-103, A-105 AND A-106 FOR ALL CORNER GUARD LOCATIONS.

PAINTING NOTES

SOLID PAINTS: THE COLOR SCHEDULE UTILIZED SHERWIN WILLIAMS COMPANY AS A BASIS FOR COLOR SELECTION. PAINT COLORS ARE INDICATED BY A NUMERICAL VALUE. THE SHEEN LEVEL IS INDICATED BY AN ALPHABET LETTER, AS DESCRIBED BELOW:

A - FLAT / MATTE
B - EGGSHELL
C - SEMI-GLOSS
B - FULL-GLOSS

SYM	DESCRIPTION	DATE	APPR

NAVFAC

MYLES M. MICHIBATA
LICENSED PROFESSIONAL ARCHITECT
No. 12367
HAWAII, U.S.A.
LIC. EXP 04/30/26

ASMD LLC.
A/E INFO

APPROVED
Evan Mizell
FOR COMMANDER NAVFAC

ACTIVITY
NATHANIEL PYRON, MILCON PLANNER, DPPH

SATISFACTORY TO DATE 3/10/2026

DES	EA	DRW	RLB	CHK	JG
PM/DM	DKS/DMK				
BRANCH MANAGER	KYM				
CHIEF ENG/ARCH	KYM				
FIRE PROTECTION	RYO				

DEPARTMENT OF THE NAVY
NAVAL FACILITIES ENGINEERING SYSTEMS COMMAND
NAVFAC PACIFIC
U.S. NAVSUPPACT

NAVAL FACILITIES ENGINEERING SYSTEMS COMMAND ~ PACIFIC
MAKALAPA, HAWAII

MCB CAMP BLAZ, GUAM

JFY 2022 PROJECT J-875
BATTLE STAFF TRAINING FACILITY

ROOM FINISH SCHEDULE

SCALE: AS NOTED
EPROJECT NO.: 1696746
CONSTR. CONTR. NO.
NAVFAC DRAWING NO. 17321958
SHEET 162 OF 468

A-613

DRAWFORM REVISION: 25 AUGUST 2020

3/12/2026 9:12:57 PM A-613
C:\Users\rlbatlitonsa\Documents\BLDG-875-1696746-A_rlbatlitonsaF4LVN.rvt

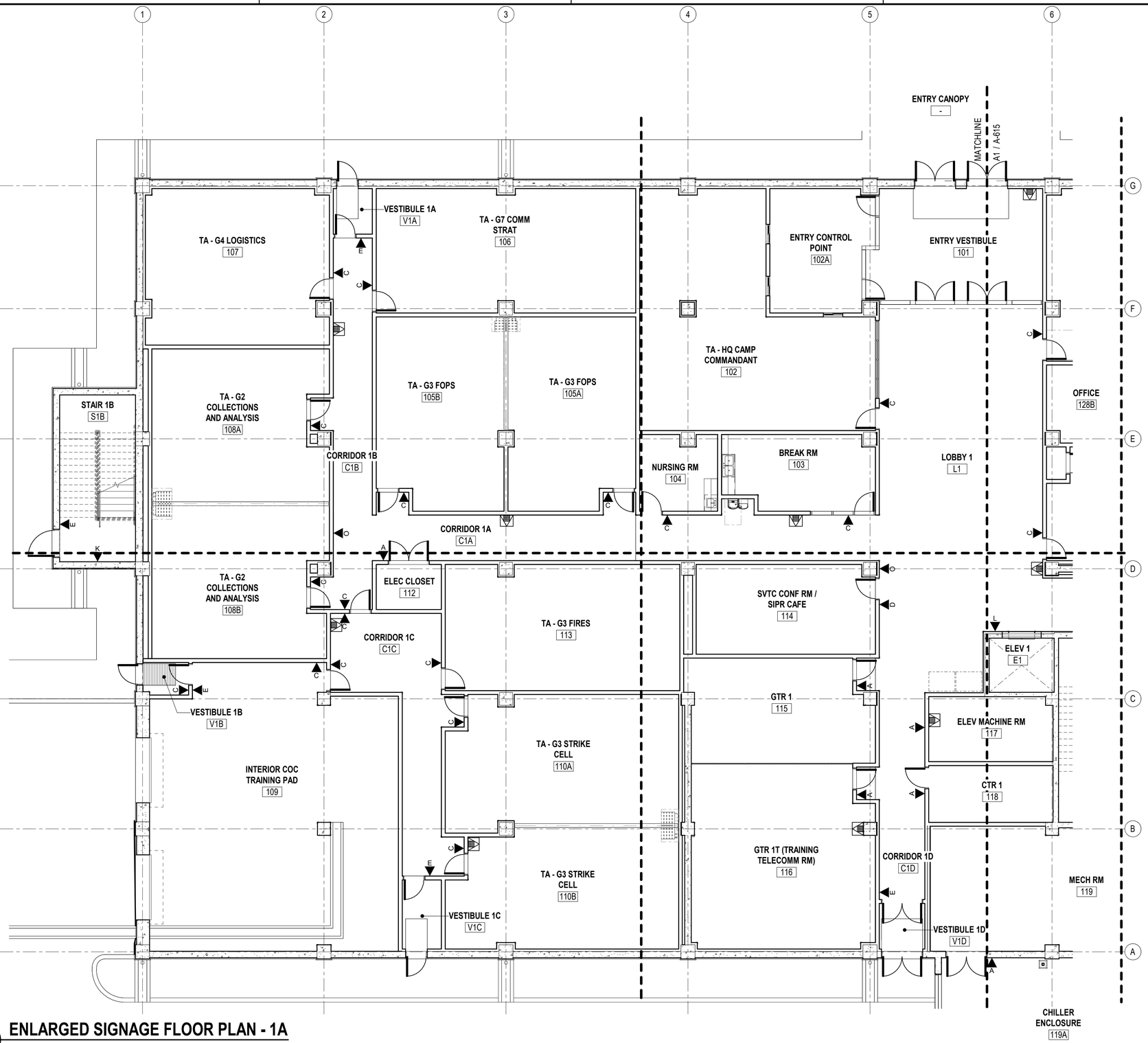

A1 ENLARGED SIGNAGE FLOOR PLAN - 1A

SCALE: 1/8" = 1'-0"

GENERAL SHEET NOTES

1. REFER TO SHEET A-618 FOR SIGNAGE SCHEDULE.
2. REFER TO SHEET A-619 FOR SIGNAGE DETAILS.

KEY PLAN

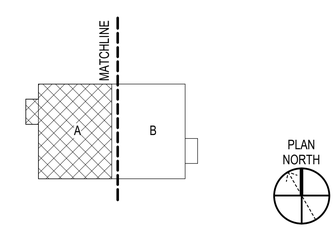

GRAPHIC SCALE(S)

1/8" = 1' - 0" 0 5' 10' 15' 30'

SYM	DESCRIPTION	DATE	APPR

NAVFAC

MYLES M. MICHIBATA LICENSED PROFESSIONAL ARCHITECT No. 12367 HAWAII, U.S.A.
LIC. EXP 04/30/26

ASMD LLC.

APPROVED
FOR COMMANDER NAVFAC

ACTIVITY
NATHANIEL PYRON, MILCON PLANNER, DPPH
SATISFACTORY TO DATE 3/10/2026

DES EA	DRW RLB	CHK JG	
PM/DM	DKS/DMK		
BRANCH MANAGER	KYM		
CHIEF ENG/ARCH	KYM		
FIRE PROTECTION	RYO		

DEPARTMENT OF THE NAVY
NAVAL FACILITIES ENGINEERING COMMAND
NAVFAC PACIFIC
U.S. NAVSUPPACT

NAVAL FACILITIES ENGINEERING SYSTEMS COMMAND
NAVAL FACILITIES ENGINEERING SYSTEMS COMMAND ~ PACIFIC
MAKALAPA, HAWAII

MCB CAMP BLAZ, GUAM

JFY 2022 PROJECT J-875
BATTLE STAFF TRAINING FACILITY

ENLARGED SIGNAGE FLOOR PLAN - 1A

SCALE: AS NOTED
EPROJECT NO.: 1696746
CONSTR. CONTR. NO.
NAVFAC DRAWING NO. 17321959
SHEET 163 OF 468
A-614

DRAWFORM REVISION: 25 AUGUST 2020

3/12/2026 9:12:58 PM A-614
C:\Users\rbillerton\Documents\BLDG-875-1696746-A_rbillertonsFr4LVN.rvt

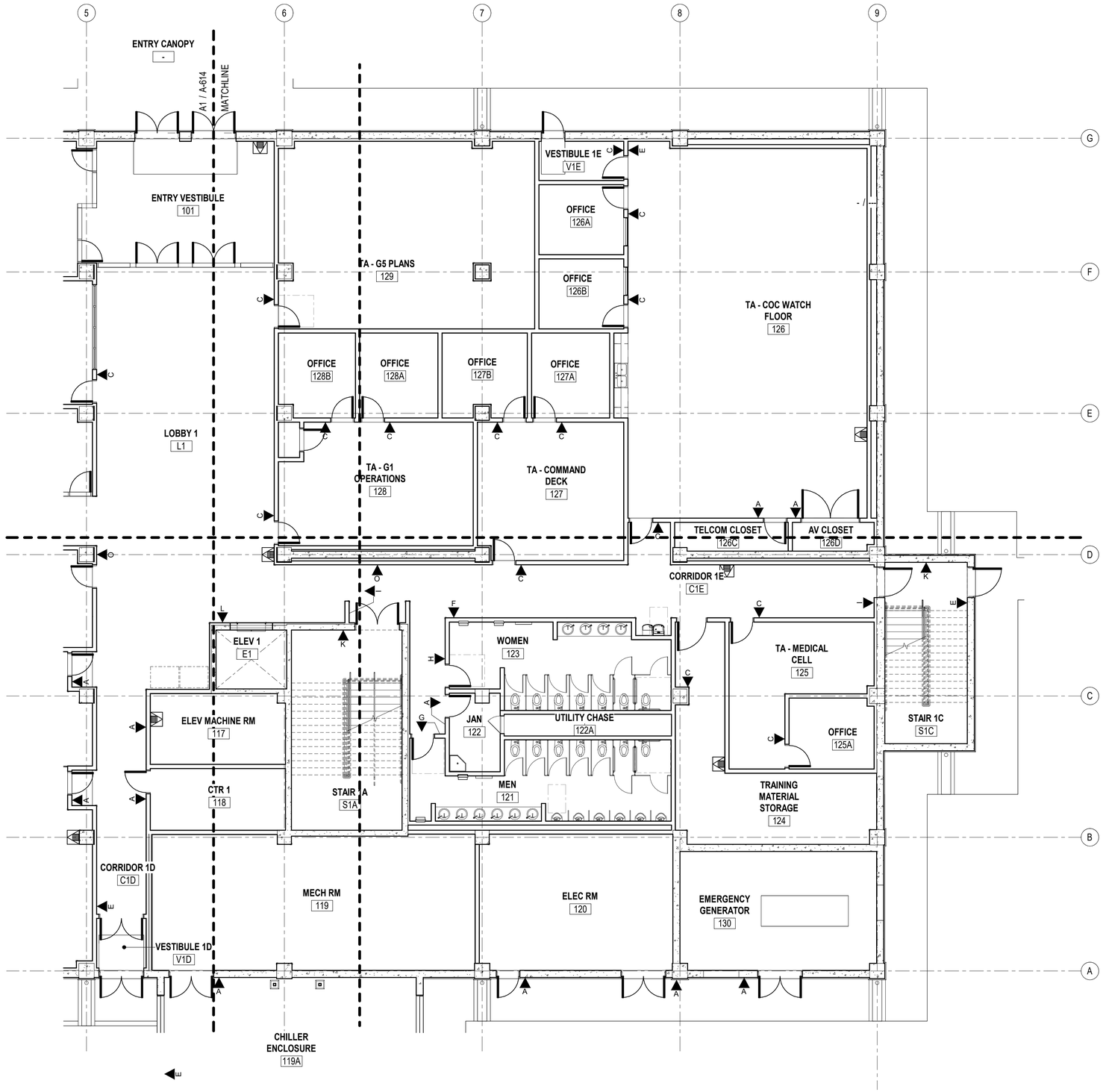

A1 ENLARGED SIGNAGE FLOOR PLAN - 1B

SCALE: 1/8" = 1'-0"

GENERAL SHEET NOTES

1. REFER TO SHEET A-618 FOR SIGNAGE SCHEDULE.
2. REFER TO SHEET A-619 FOR SIGNAGE DETAILS.

KEY PLAN

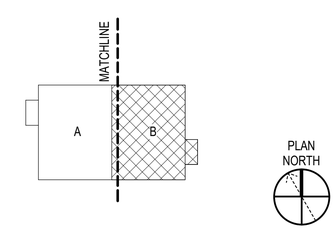

GRAPHIC SCALE(S)

1/8" = 1' - 0" 0 5' 10' 15' 30'

SYM	DESCRIPTION	DATE	APPR

NAVFAC

MYLES M. MICHIBATA LICENSED PROFESSIONAL ARCHITECT No. 12367 HAWAII, U.S.A.
LIC. EXP 04/30/26 SEAL

ASMD LLC. A/E INFO

APPROVED Evan Miyazaki
FOR COMMANDER NAVFAC

ACTIVITY
NATHANIEL PYRON, MILCON PLANNER, DPPH

SATISFACTORY TO DATE 3/10/2026

DES	EA	DRW	RLB	CHK	JG

PMDM	DKS/DMK
BRANCH MANAGER	KYM
CHIEF ENG/ARCH	KYM
FIRE PROTECTION	RYO

DEPARTMENT OF THE NAVY
NAVAL FACILITIES ENGINEERING SYSTEMS COMMAND
NAVFAC PACIFIC
U.S. NAVSUPPACT

NAVAL FACILITIES ENGINEERING SYSTEMS COMMAND ~ PACIFIC
MAKALAPA, HAWAII

MCB CAMP BLAZ, GUAM

JFY 2022 PROJECT J-875
BATTLE STAFF TRAINING FACILITY

ENLARGED SIGNAGE FLOOR PLAN - 1B

SCALE: AS NOTED
EPROJECT NO.: 1696746
CONSTR. CONTR. NO.
NAVFAC DRAWING NO. 17321960
SHEET 164 OF 468

A-615

DRAWFORM REVISION: 25 AUGUST 2020

3/12/2026 9:12:59 PM A-615
C:\Users\rbellmona\Documents\BLDG-875-1696746-A_rbellmonaF4LVN.rvt

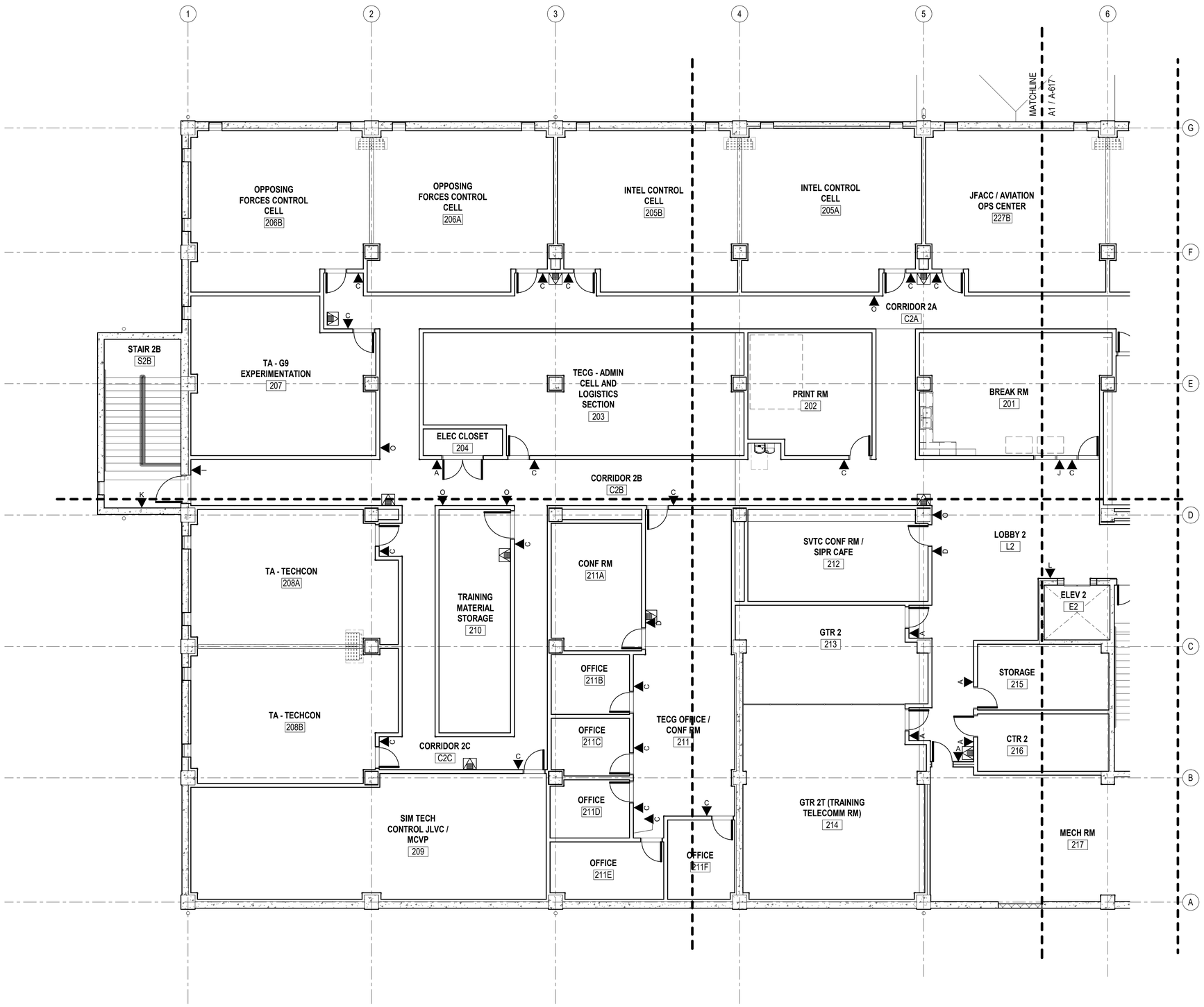

A1 ENLARGED SIGNAGE FLOOR PLAN - 2A

SCALE: 1/8" = 1'-0"

GENERAL SHEET NOTES

1. REFER TO SHEET A-618 FOR SIGNAGE SCHEDULE.
2. REFER TO SHEET A-619 FOR SIGNAGE DETAILS.

KEY PLAN

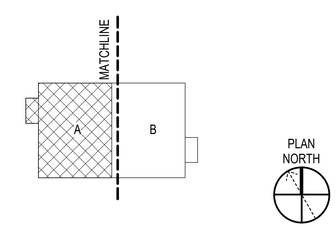

GRAPHIC SCALE(S)

1/8" = 1' - 0" 0 5' 10' 15' 30'

SYM	DESCRIPTION	DATE	APPR

NAVFAC

MYLES M. MICHIBATA LICENSED PROFESSIONAL ARCHITECT No. 12367 HAWAII, U.S.A.
LIC. EXP 04/30/26 SEAL

ASMD LLC. A/E INFO

APPROVED Evan Minjares FOR COMMANDER NAVFAC

ACTIVITY: NATHANIEL PYRON, MILCON PLANNER, DPPH

SATISFACTORY TO DATE 3/10/2026

DES	EA	DRW	RLB	CHK	JG

PMDM	DKS/DMK
BRANCH MANAGER	KYM
CHIEF ENG/ARCH	KYM
FIRE PROTECTION	RYO

DEPARTMENT OF THE NAVY
NAVFAC PACIFIC
NAVAL FACILITIES ENGINEERING SYSTEMS COMMAND
NAVAL FACILITIES ENGINEERING SYSTEMS COMMAND ~ PACIFIC
MAKALAPA, HAWAII
U.S. NAVSUPPACT
MCB CAMP BLAZ, GUAM

JFY 2022 PROJECT J-875
BATTLE STAFF TRAINING FACILITY

ENLARGED SIGNAGE FLOOR PLAN - 2A

SCALE: AS NOTED
EPROJECT NO.: 1696746
CONSTR. CONTR. NO.
NAVFAC DRAWING NO. 17321961
SHEET 165 OF 468

A-616

DRAWFORM REVISION: 25 AUGUST 2020

3/12/2026 9:13:00 PM A-616
C:\Users\rlbattiste\Documents\BLDG-875-1696746-A_rlbattiste\rstaff4LVN.rvt

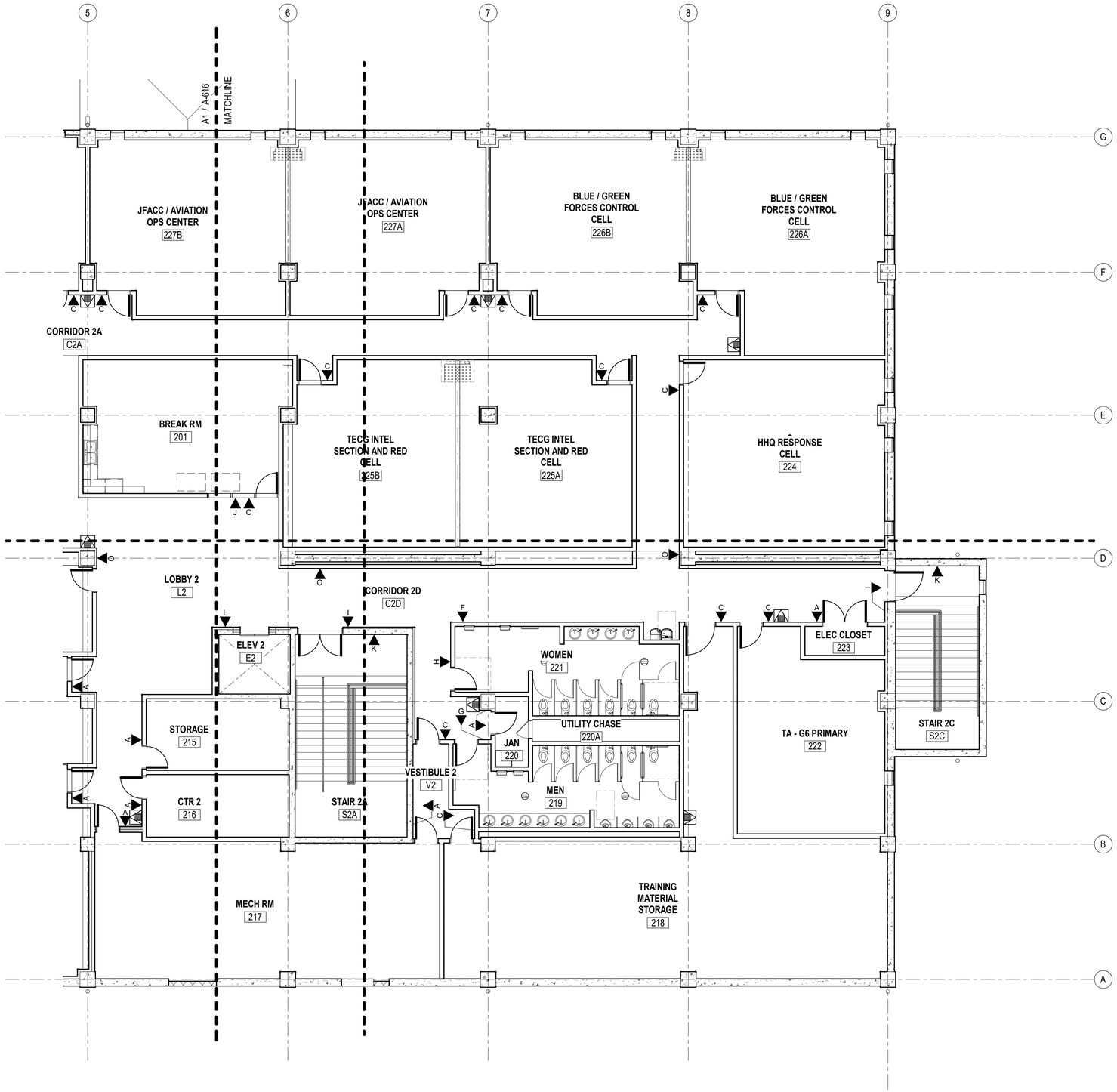

A1 ENLARGED SIGNAGE FLOOR PLAN - 2B

SCALE: 1/8" = 1'-0"

GENERAL SHEET NOTES

1. REFER TO SHEET A-618 FOR SIGNAGE SCHEDULE.
2. REFER TO SHEET A-619 FOR SIGNAGE DETAILS.

KEY PLAN

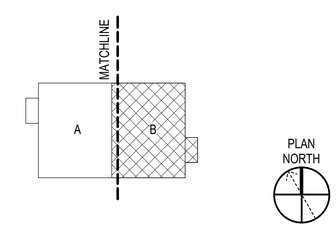

GRAPHIC SCALE(S)

1/8" = 1' - 0" 0 5' 10' 15' 30'

SYM	DESCRIPTION	DATE	APPR

NAVFAC

MYLES M. MICHIBATA LICENSED PROFESSIONAL ARCHITECT No. 12367 HAWAII, U.S.A.
LIC. EXP 04/30/26 SEAL

ASMD LLC. A/E INFO

APPROVED
FOR COMMANDER NAVFAC

ACTIVITY
NATHANIEL PYRON, MILCON PLANNER, DPPH

SATISFACTORY TO DATE 3/10/2026

DES	EA	DRW RLB	CHK JG
PMDM	DKS/DMK		
BRANCH MANAGER	KYM		
CHIEF ENG/ARCH	KYM		
FIRE PROTECTION	RYO		

DEPARTMENT OF THE NAVY
NAVFAC PACIFIC
NAVAL FACILITIES ENGINEERING SYSTEMS COMMAND ~ PACIFIC
NAVAL FACILITIES ENGINEERING SYSTEMS COMMAND
MAKALAPA, HAWAII
U.S. NAVSUPPACT
MCB CAMP BLAZ, GUAM
JFY 2022 PROJECT J-875
BATTLE STAFF TRAINING FACILITY
ENLARGED SIGNAGE FLOOR PLAN - 2B

SCALE: AS NOTED
EPROJECT NO.: 1696746
CONSTR. CONTR. NO.
NAVFAC DRAWING NO. 17321962
SHEET 166 OF 468
A-617

DRAWFORM REVISION: 25 AUGUST 2020

3/12/2026 9:13:01 PM A-617
C:\Users\rtballinton\Documents\BLDG-875-1696746-A_rtballintonsaFALVN.rvt

SIGNAGE SCHEDULE

CONSTRUCTION ROOM NUMBER	ROOM NAME	SIGN TYPE	SIGN ROOM NUMBER	SIGN MESSAGE	SIGNAGE NOTES
-	ENTRY CANOPY	-	-	-	-
101	ENTRY VESTIBULE	-	-	-	-
102	TA - HQ CAMP COMMANDANT	C	102	TA - HQ CAMP COMMANDANT	-
102A	ENTRY CONTROL POINT	-	-	-	-
103	BREAK RM	C	103	BREAKROOM	MOUNTED ON GLASS SIDELIGHT
104	NURSING RM	C	104	NURSING ROOM	-
105A	TA - G3 FOPS	C	105A	TA - G3 FOPS	-
105B	TA - G3 FOPS	C	105B	TA - G3 FOPS	-
106	TA - G7 COMM STRAT	C	106	TA - G7 COMM STRAT	-
107	TA - G4 LOGISTICS	C	107	TA - G4 LOGISTICS	-
108A	TA - G2 COLLECTIONS AND ANALYSIS	C	108A	TA - G2 COLLECTIONS AND ANALYSIS	-
108B	TA - G2 COLLECTIONS AND ANALYSIS	C	108B	TA - G2 COLLECTIONS AND ANALYSIS	-
109	INTERIOR COC TRAINING PAD	C	109	INTERIOR COC TRAINING PAD	-
110A	TA - G3 STRIKE CELL	C	110A	TA - G3 STRIKE CELL	-
110B	TA - G3 STRIKE CELL	C	110B	TA - G3 STRIKE CELL	-
112	ELEC CLOSET	A	112	ELECTRICAL	-
113	TA - G3 FIRES	C	113	TA - G3 FIRES	-
114	SVTC CONF RM / SIPR CAFE	D	114	CONFERENCE ROOM	-
115	GTR 1	A	115	GOVERNMENT TELECOM	-
116	GTR 1T (TRAINING TELECOMM RM)	A	116	GOVERNMENT TELECOM	-
117	ELEV MACHINE RM	A	117	ELEVATOR MACHINE ROOM	-
118	CTR 1	A	118	COMMERCIAL TELECOM	-
119	MECH RM	A	119	MECHANICAL	-
119A	CHILLER ENCLOSURE	A	119A	CHILLER ENCLOSURE	-
120	ELEC RM	A	120	ELECTRICAL	-
121	MEN	G	-	MEN	-
122	JAN	A	122	JANITOR	-
122A	UTILITY CHASE	-	-	-	-
123	WOMEN	H	-	WOMEN	-
124	TRAINING MATERIAL STORAGE	C	124	TRAINING MATERIAL STORAGE	-
125	TA - MEDICAL CELL	C	125	TA - MEDICAL CELL	-
125A	OFFICE	C	125A	OFFICE	-
126	TA - COC WATCH FLOOR	C	126	TA - COC WATCH FLOOR	-
126A	OFFICE	C	126A	OFFICE	-
126B	OFFICE	C	126B	OFFICE	-
126C	TELCOM CLOSET	A	126C	STORAGE	-
126D	AV CLOSET	A	126D	AV CLOSET	-
127	TA - COMMAND DECK	C	127	TA - COMMAND DECK	-
127A	OFFICE	C	127A	OFFICE	-
127B	OFFICE	C	127B	OFFICE	-
128	TA - G1 OPERATIONS	C	128	TA - G1 OPERATIONS	-
128A	OFFICE	C	128A	OFFICE	-
128B	OFFICE	C	128B	OFFICE	-
128C	TELCOM CLOSET				
129	TA - G5 PLANS	C	129	TA - G5 PLANS	-
130	EMERGENCY GENERATOR	A	130	EMERGENCY GENERATOR	-
C1A	CORRIDOR 1A	-	-	-	-
C1B	CORRIDOR 1B	O	-	TBD	-
C1C	CORRIDOR 1C	C	-	TBD	-
C1D	CORRIDOR 1D	E	-	EXIT	-
C1E	CORRIDOR 1E	F / O	-	F - RESTROOM / O - TBD	-
E1	ELEV 1	-	-	-	-
L1	LOBBY 1	L / O	-	L - IN CASE OF FIRE DO NOT USE ELEVATOR USE EXIT STAIRS UNLESS OTHERWISE INSTRUCTED / O - TBD	-
S1A	STAIR 1A	I / K	S1A	I - STAIR A / K - STAIR A FLOOR 1 NO ROOF ACCESS FIRST TO SECOND FLOOR EXIT ON LEVEL 1	-
S1B	STAIR 1B	E / K	S1B	E - EXIT / K - STAIR B FLOOR 1 NO ROOF ACCESS FIRST TO SECOND FLOOR EXIT ON LEVEL 1	-
S1C	STAIR 1C	I / K	S1C	I - STAIR C / K - STAIR C FLOOR 1 NO ROOF ACCESS FIRST TO SECOND FLOOR EXIT ON LEVEL 1	-
V1A	VESTIBULE 1A	E	-	EXIT	-
V1B	VESTIBULE 1B	E	-	EXIT	-
V1C	VESTIBULE 1C	E	-	EXIT	-
V1D	VESTIBULE 1D	E	-	EXIT	-

SIGNAGE SCHEDULE

CONSTRUCTION ROOM NUMBER	ROOM NAME	SIGN TYPE	SIGN ROOM NUMBER	SIGN MESSAGE	SIGNAGE NOTES
V1E	VESTIBULE 1E	E	-	EXIT	-
201	BREAK RM	C / J	201	BREAKROOM	MOUNTED ON GLASS SIDELIGHT
202	PRINT RM	C	202	PRINT ROOM	-
203	TECG - ADMIN CELL AND LOGISTICS SECTION	C	203	TECG - ADMIN CELL AND LOGISTICS SECTION	-
204	ELEC CLOSET	A	204	ELECTRICAL	-
205A	INTEL CONTROL CELL	C	205A	INTEL CONTROL CELL	-
205B	INTEL CONTROL CELL	C	205B	INTEL CONTROL CELL	-
206A	OPPOSING FORCES CONTROL CELL	C	206A	OPPOSING FORCES CONTROL CELL	-
206B	OPPOSING FORCES CONTROL CELL	C	206B	OPPOSING FORCES CONTROL CELL	-
207	TA - G9 EXPERIMENTATION	C	207	TA - G9 EXPERIMENTATION	-
208A	TA - TECHCON	C	208A	TA - TECHCON	-
208B	TA - TECHCON	C	208B	TA - TECHCON	-
209	SIM TECH CONTROL JLVC / MCVP	C	209	SIM TECH CONTROL JLVC / MCVP	-
210	TRAINING MATERIAL STORAGE	C	210	TRAINING MATERIAL STORAGE	-
211	TECG OFFICE / CONF RM	C	211	TECG - OFFICE / CONFERENCE ROOM	-
211A	CONF RM	D	211A	CONFERENCE ROOM	-
211B	OFFICE	C	211B	OFFICE	-
211C	OFFICE	C	211C	OFFICE	-
211D	OFFICE	C	211D	OFFICE	-
211E	OFFICE	C	211E	OFFICE	-
211F	OFFICE	C	211F	OFFICE	-
212	SVTC CONF RM / SIPR CAFE	D	212	CONFERENCE ROOM	-
213	GTR 2	A	213	GOVERNMENT TELECOM	-
214	GTR 2T (TRAINING TELECOMM RM)	A	214	GOVERNMENT TELECOM	-
215	STORAGE	A	215	STORAGE	-
216	CTR 2	A	216	COMMERCIAL TELECOM	-
217	MECH RM	A	217	MECHANICAL	-
218	TRAINING MATERIAL STORAGE	C	218	TRAINING MATERIAL STORAGE	-
219	MEN	G	-	MEN	-
220	JAN	A	220	JANITOR	-
220A	UTILITY CHASE	-	-	-	-
221	WOMEN	H	-	WOMEN	-
222	TA - G6 PRIMARY	C	222	TA - G6 PRIMARY	-
223	ELEC CLOSET	A	223	ELECTRICAL	-
224	HHQ RESPONSE CELL	C	224	HHQ RESPONSE CELL	-
225A	TECG INTEL SECTION AND RED CELL	C	225A	TECG INTEL SECTION AND RED CELL	-
225B	TECG INTEL SECTION AND RED CELL	C	225B	TECG INTEL SECTION AND RED CELL	-
226A	BLUE / GREEN FORCES CONTROL CELL	C	226A	BLUE / GREEN FORCES CONTROL CELL	-
226B	BLUE / GREEN FORCES CONTROL CELL	C	226B	BLUE / GREEN FORCES CONTROL CELL	-
227A	JFACC / AVIATION OPS CENTER	C	227A	JFACC / AVIATION OPS CENTER	-
227B	JFACC / AVIATION OPS CENTER	C	227B	JFACC / AVIATION OPS CENTER	-
C2A	CORRIDOR 2A	O	-	TBD	-
C2B	CORRIDOR 2B	O	-	TBD	-
C2C	CORRIDOR 2C	-	-	-	-
C2D	CORRIDOR 2D	F / O	-	F - RESTROOM / O - TBD	-
E2	ELEV 2	-	-	-	-
L2	LOBBY 2	L / O	-	L - IN CASE OF FIRE DO NOT USE ELEVATOR USE EXIT STAIRS UNLESS OTHERWISE INSTRUCTED / O - TBD	-
S2A	STAIR 2A	I / K	S2A	I - STAIR A / K - STAIR A FLOOR 2 NO ROOF ACCESS FIRST TO SECOND FLOOR EXIT ON LEVEL 1	-
S2B	STAIR 2B	I / K	S2B	I - STAIR B / K - STAIR B FLOOR 2 NO ROOF ACCESS FIRST TO SECOND FLOOR EXIT ON LEVEL 1	-
S2C	STAIR 2C	I / K	S2C	I - STAIR C / K - STAIR C FLOOR 2 NO ROOF ACCESS FIRST TO SECOND FLOOR EXIT ON LEVEL 1	-
V2	VESTIBULE 2	C	-	TBD	-

GENERAL SHEET NOTES

1. REFER TO SHEET A-619 FOR SIGNAGE TYPES AND DETAILS

SYM	DESCRIPTION	DATE	APPR

NAVFAC

MYLES M. MICHIBATA LICENSED PROFESSIONAL ARCHITECT No. 12367 HAWAII, U.S.A.
LIC. EXP 04/30/26 SEAL

ASMD LLC. A/E INFO

APPROVED
FOR COMMANDER NAVFAC

ACTIVITY
NATHANIEL PYRON, MILCON PLANNER, DPPH
SATISFACTORY TO DATE 3/10/2026
DES EA DRW RLB CHK JG
PMDM DKS/DMK
BRANCH MANAGER KYM
CHIEF ENG/ARCH KYM
FIRE PROTECTION RYO

DEPARTMENT OF THE NAVY
NAVFAC PACIFIC
U.S. NAVSUPPACT
NAVAL FACILITIES ENGINEERING SYSTEMS COMMAND ~ PACIFIC
NAVAL FACILITIES ENGINEERING SYSTEMS COMMAND
MAKALAPA, HAWAII
MCB CAMP BLAZ, GUAM
JFY 2022 PROJECT J-875
BATTLE STAFF TRAINING FACILITY
SIGNAGE SCHEDULE

SCALE: AS NOTED
EPROJECT NO.: 1696746
CONSTR. CONTR. NO.
NAVFAC DRAWING NO. 17321963
SHEET 167 OF 468
A-618

DRAWFORM REVISION: 25 AUGUST 2020

A-618
3/12/2026 9:13:02 PM
C:\Users\BSamonte\Documents\BLDG-J875-1696746-A_rbuilt\tonaFdLVN.rvt

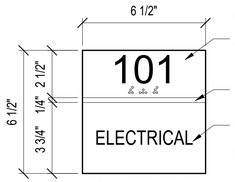

BACKGROUND COLOR: SW7674 PEPPERCORN, TEXT: 1-1/2" TACTILE ROOM NO. WITH GRADE 2 BRAILLE, CENTURY GOTHIC, COLOR: SW7101 FUTON

1/4" BRUSHED ALUMINUM REVEAL

BACKGROUND COLOR: SW7674 PEPPERCORN TEXT: 3/4" TACTILE ROOM NAME, COLOR: SW7101 FUTON

SIGN TYPE A

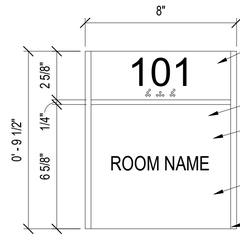

BACKGROUND COLOR: SW7674 PEPPERCORN TEXT: 1-1/2" TACTILE ROOM NO. W/ GRADE 2 BRAILLE CENTURY GOTHIC, COLOR: SW7101 FUTON

1/4" BRUSHED ALUMINUM REVEAL

PRINTED REMOVABLE INSERT: WHITE PAPER, TEXT: 3/4" ROOM NAME, CENTURY GOTHIC, COLOR: BLACK

INSERT WINDOW WITH CLEAR MATTE ACRYLIC TOP

REMOVABLE END CAPS, COLOR: SW7674 PEPPERCORN

SIGN TYPE C

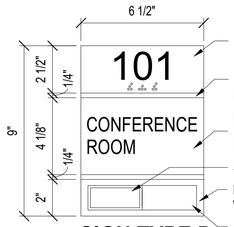

BACKGROUND COLOR: SW7674 PEPPERCORN TEXT: 1-1/2" TACTILE ROOM NO. WITH GRADE 2 BRAILLE CENTURY GOTHIC, COLOR: SW7101 FUTON

TYPICAL DETAIL: 1/4" BRUSHED ALUMINUM REVEAL

BACKGROUND COLOR: SW7674 PEPPERCORN TEXT: 3/4" SUBSURFACE MESSAGE, CENTURY GOTHIC, COLOR: SW7101 FUTON

SLIDER, GREEN BACKGROUND AND BORDER

BACKGROUND MATERIAL: FORMICA, CITADEL WARP

RED BACKGROUND

SIGN TYPE D

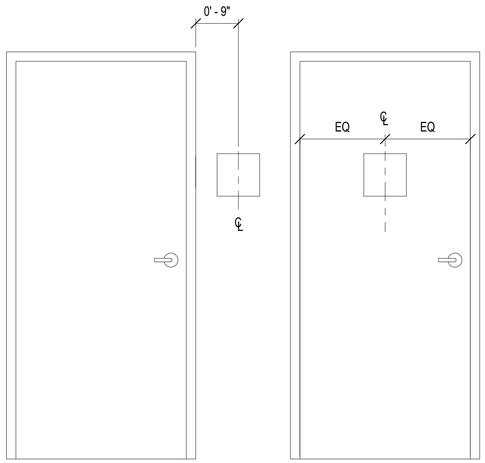

DOORWAY SIGNAGE

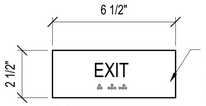

BACKGROUND COLOR: SW7674 PEPPERCORN TEXT: 3/4" TACTILE MESSAGE W/ GRADE 2 BRAILLE CENTURY GOTHIC, COLOR: SW7101 FUTON

SIGN TYPE E

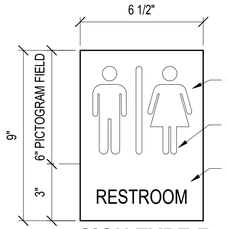

FLAG-MOUNTED

5" RAISED PICTOGRAM, COLOR: SW7101 FUTON

BACKGROUND COLOR: SW7674 PEPPERCORN TEXT: 1-1/2", COLOR: SW7101 FUTON

SIGN TYPE F

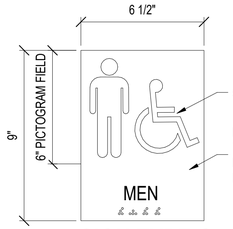

5" RAISED PICTOGRAM, COLOR: SW7101 FUTON

BACKGROUND COLOR: SW7674 PEPPERCORN TEXT: 1-1/2" TACTILE MESSAGE WITH GRADE 2 BRAILLE CENTURY GOTHIC, COLOR: SW7101 FUTON

SIGN TYPE G

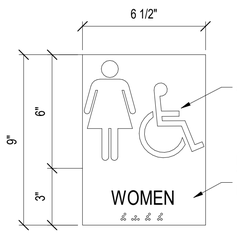

5" RAISED PICTOGRAM, COLOR: SW7101 FUTON

BACKGROUND COLOR: SW7674 PEPPERCORN TEXT: 1-1/2" TACTILE MESSAGE WITH GRADE 2 BRAILLE CENTURY GOTHIC, COLOR: SW7101 FUTON

SIGN TYPE H

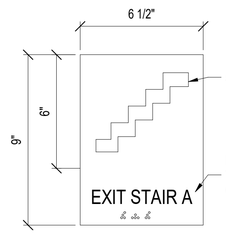

5" RAISED PICTOGRAM, COLOR: SW7101 FUTON

BACKGROUND COLOR: SW7674 PEPPERCORN TEXT: 1-1/2" TACTILE MESSAGE WITH GRADE 2 BRAILLE CENTURY GOTHIC, COLOR: SW7101 FUTON

SIGN TYPE I

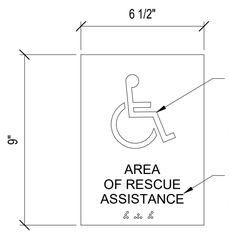

5" RAISED PICTORGRAM, COLOR: SW7101 FUTON

BACKGROUND COLOR: SW7674 PEPPERCORN, TEXT: 1-1/2" TACTILE MESSAGE WITH GRADE 2 BRAILLE CENTURY GOTHIC, COLOR: SW7101 FUTON

SIGN TYPE J

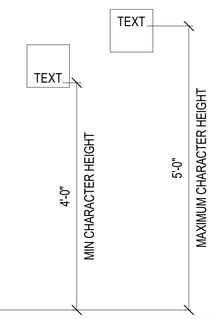

SIGNAGE MOUNTING HEIGHT

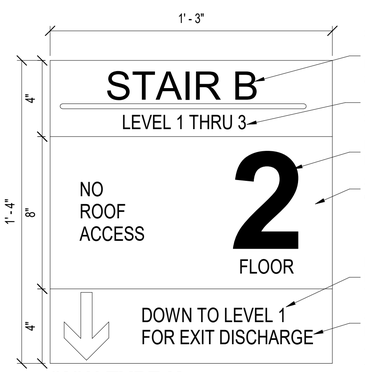

STAIR IDENTIFICATION TEXT: 1-1/2" SUBSURFACE, BACKGROUND COLOR: SW7674 PEPPERCORN

FLOOR IDENTIFICATION TEXT: 3/4" SUBSURFACE

LEVEL NUMBER: 5" TACTILE MESSAGE

SUBSURFACE BACKGROUND COLOR: SW7101 FUTON

BACKGROUND COLOR: SW7674 PEPPERCORN, EXIT INFORMATION TEXT: 3/4" SUBSURFACE

STAIR INFORMATION TEXT: 3/4" ROOF ACCESS TEXT: 3/4"

TYPICAL TEXT: CENTURY GOTHIC TYPICAL TEXT COLOR: SW7674 PEPPERCORN

SIGN TYPE K
SIGN TYPE K1 (ROOF ACCESS)

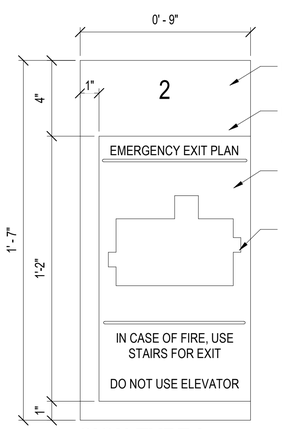

LEVEL NO: 3" TACTILE MESSAGE

BACKGROUND COLOR: SW7674 PEPPERCORN, TEXT: CENTURY GOTHIC, COLOR: SW7101 FUTON

INSERT WINDOW WITH CLEAR MATTE ACRYLIC TOP

PRINTED REMOVABLE INSERT EVACUATION MAP, PAPER: WHITE

SIGN TYPE L

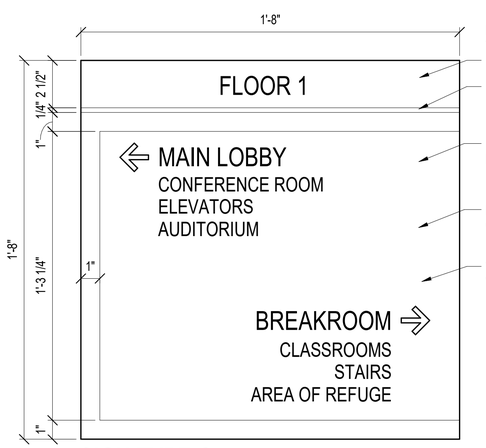

BACKGROUND COLOR: SW7674 PEPPERCORN TYP TEXT: 1-1/2" CENTURY GOTHIC, COLOR: SW7101 FUTON

1/4" BRUSHED ALUMINUM REVEAL

INSERT WINDOW WITH CLEAR MATTE ACRYLIC TOP

PRINTED REMOVABLE INSERT, PAPER: WHITE, TEXT COLOR: BLACK

TYP ARROW: 1" HIGH RAISED PICTOGRAM, COLOR: WHITE

SIGN TYPE O

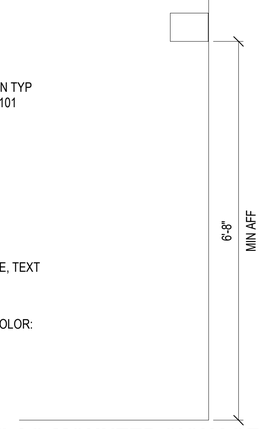

FLAG-MOUNTED SIGNAGE

A1 TYPICAL SIGNAGE
SCALE: 3" = 1'-0"

A5 TYPICAL SIGNAGE MOUNTING HEIGHT
SCALE: 3/4" = 1'-0"

GRAPHIC SCALE(S)

3" = 1' - 0" 0 3" 6" 1'

3/4" = 1' - 0" 0 6" 1' 2' 3' 4' 5'

SYM	DESCRIPTION	DATE	APPR

NAVFAC

MYLES M. MICHIBATA — LICENSED PROFESSIONAL ARCHITECT No. 12367 — HAWAII, U.S.A.
LIC. EXP 04/30/26 SEAL

ASMD LLC. A/E INFO

APPROVED
FOR COMMANDER NAVFAC

ACTIVITY
NATHANIEL PYRON, MILCON PLANNER, DPPH

SATISFACTORY TO DATE 3/10/2026

DES	EA	DRW	RLB	CHK	JG
PMDM	DKS/DMK				
BRANCH MANAGER	KYM				
CHIEF ENG/ARCH	KYM				
FIRE PROTECTION	RYO				

DEPARTMENT OF THE NAVY
NAVFAC PACIFIC
NAVAL FACILITIES ENGINEERING SYSTEMS COMMAND ~ PACIFIC
NAVAL FACILITIES ENGINEERING SYSTEMS COMMAND
MAKALAPA, HAWAII
U.S. NAVSUPPACT
MCB CAMP BLAZ, GUAM
JFY 2022 PROJECT J-875
BATTLE STAFF TRAINING FACILITY
TYPICAL SIGNAGE DETAILS

SCALE: AS NOTED
EPROJECT NO.: 1696746
CONSTR. CONTR. NO.
NAVFAC DRAWING NO. 17321964
SHEET 168 OF 468
A-619

DRAWFORM REVISION: 25 AUGUST 2020

3/12/2026 9:13:02 PM A-619
C:\Users\BellmontJ\Documents\BLDG-J875-1696746-A_rbaltimoreF4LVN.rvt

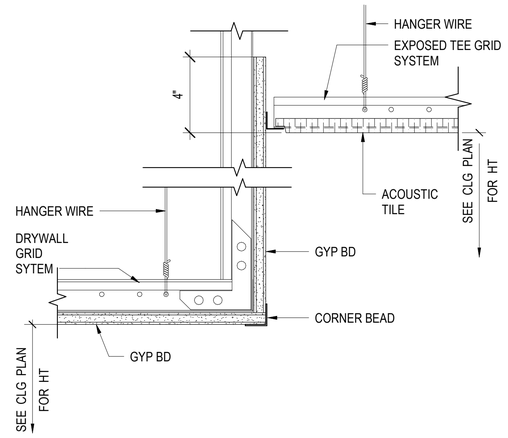

D3 ACT TO GYP SOFFIT CEILING DETAIL

SCALE: 3" = 1'-0" (A-112)

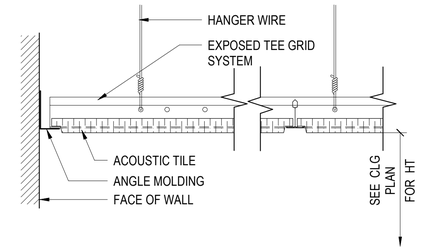

D4 TYP ACT CEILING DETAIL

SCALE: 3" = 1'-0" (A-115)

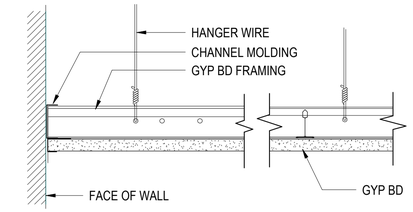

D5 TYP GYP CEILING DETAIL

SCALE: 3" = 1'-0"

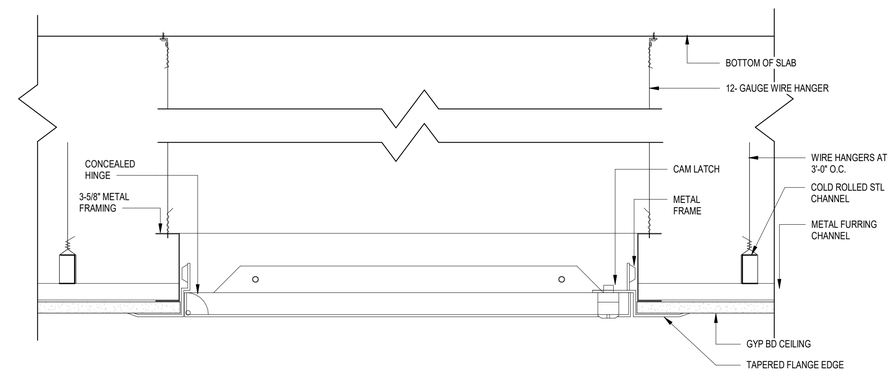

C4 CEILING ACCESS PANEL DETAIL

SCALE: 3" = 1'-0"

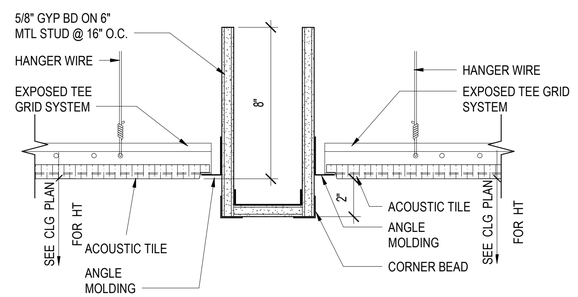

B3 GYP TO GYP TRANSITION CEILING DETAIL

SCALE: 3" = 1'-0" (A-112)

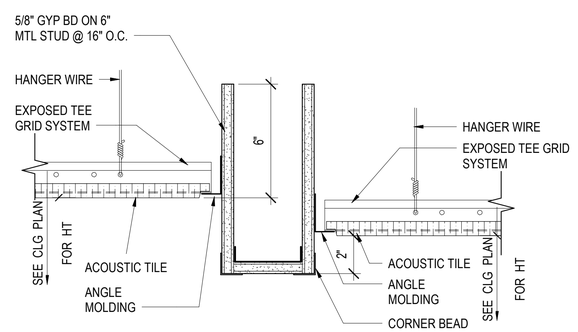

A3 GYP TO GYP TRANSITION CEILING DETAIL

SCALE: 3" = 1'-0"

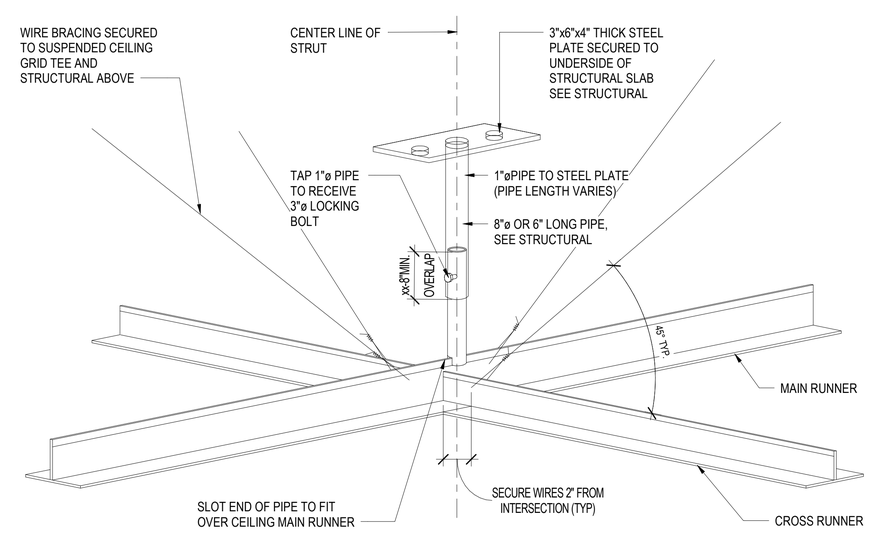

A4 CEILING BRACING DETAIL

SCALE: 3" = 1'-0"

GRAPHIC SCALE(S)

3" = 1' - 0" 0 3" 6" 1'

SYM	DESCRIPTION	DATE	APPR

NAVFAC

MYLES M. MICHIBATA LICENSED PROFESSIONAL ARCHITECT No. 12367 HAWAII, U.S.A.
LIC. EXP 04/30/26

ASMD LLC.
A/E INFO

APPROVED
FOR COMMANDER NAVFAC

ACTIVITY
NATHANIEL PYRON, MILCON PLANNER, DPPH

SATISFACTORY TO DATE 3/10/2026

DES JG / RLB	DRW RLB	CHK JG	
PMDM		DKS/DMK	
BRANCH MANAGER		KYM	
CHIEF ENG/ARCH		KYM	
FIRE PROTECTION		RYO	

DEPARTMENT OF THE NAVY
NAVFAC PACIFIC
NAVAL FACILITIES ENGINEERING SYSTEMS COMMAND ~ PACIFIC
MAKALAPA, HAWAII
U.S. NAVSUPPACT
MCB CAMP BLAZ, GUAM
JFY 2022 PROJECT J-875
BATTLE STAFF TRAINING FACILITY
CEILING DETAILS

SCALE: AS NOTED
EPROJECT NO.: 1696746
CONSTR. CONTR. NO.
NAVFAC DRAWING NO. 17321965
SHEET 169 OF 468
A-701

DRAWFORM REVISION: 25 AUGUST 2020

3/12/2026 9:13:03 PM A-701
C:\Users\BallmontaiDocuments\BLDG-875-1696746-A_rbalintonsaFALVN.rvt

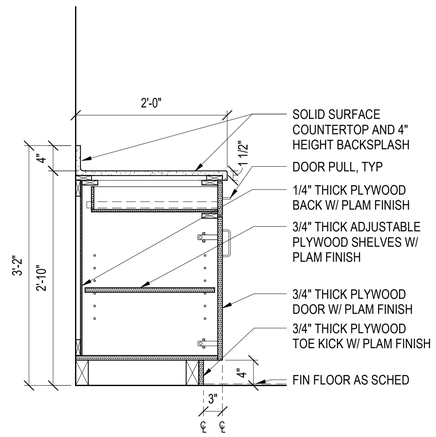

C2 BASE CABINET

SCALE: 1" = 1'-0"

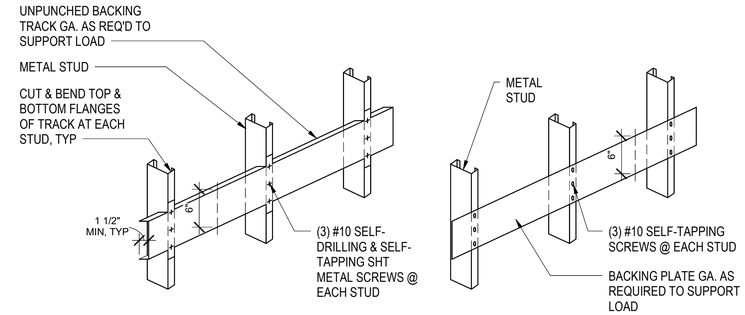

TYPE 1

USE AT:

* EQUIPMENT DISTRIBUTING MORE THAN 20# AND LESS THAN 100# PER STUD (CENTER OF GRAVITY LESS THAN 6" FROM FOS)

NOTES:

1. EXTEND BACKING PLATE TYPE 1 & 2 ACROSS (3) STUDS MINIMUM.
2. EXTEND ALL BACKING PLATES TO LAST STUD BEYOND ITEM.
3. FOR TYPE 1, DO NOT CUT FLANGES BETWEEN SUPPORTING STUDS.
4. USE GALVANIZED METAL ONLY

TYPE 2

USE AT:

* OVERHEAD, FULL HEIGHT & BASE CABINETS AND SHELVES
* GRAB BARS
* TOILET ACCESSORIES
* MARKER & TACK BOARDS
* FIRE EXTINGUISHER BRACKETS
* LOCKERS
* EQUIPMENT DISTRIBUTING LESS THAN 20# PER STUD (CENTER OF GRAVITY LESS THAN 6" FROM FOS)
* DOOR STOPS (WALL MOUNTED) WHERE APPLICABLE

C3 WALL BACKING PLATE DETAIL

SCALE: 1" = 1'-0"

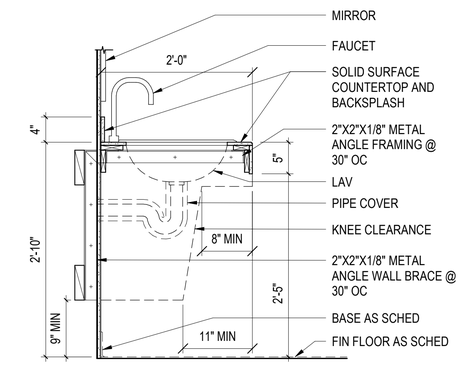

C5 LAV COUNTER DETAIL

SCALE: 1" = 1'-0"

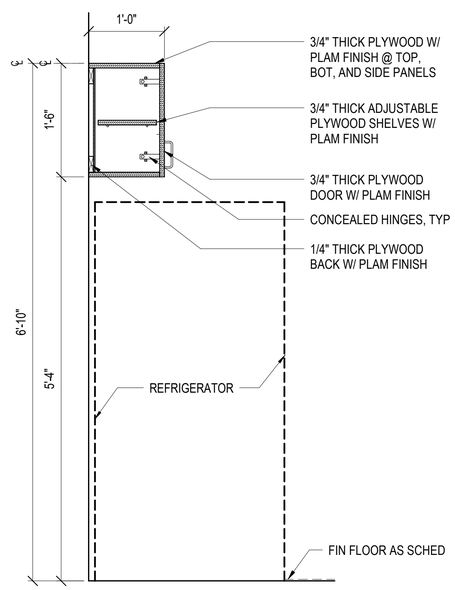

A2 WALL CABINET

SCALE: 1" = 1'-0" (A-401)

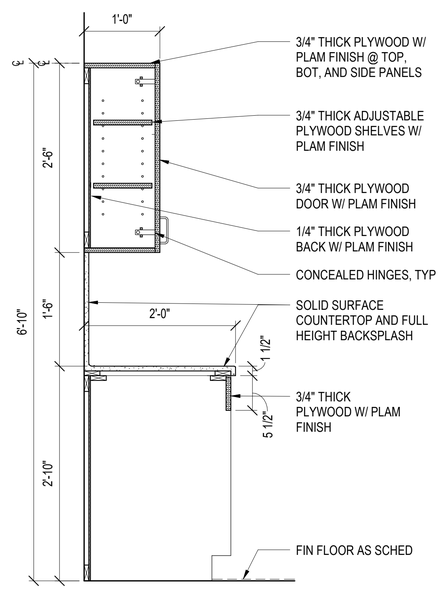

A3 BASE AND WALL CABINET OPEN

SCALE: 1" = 1'-0" (A-402)

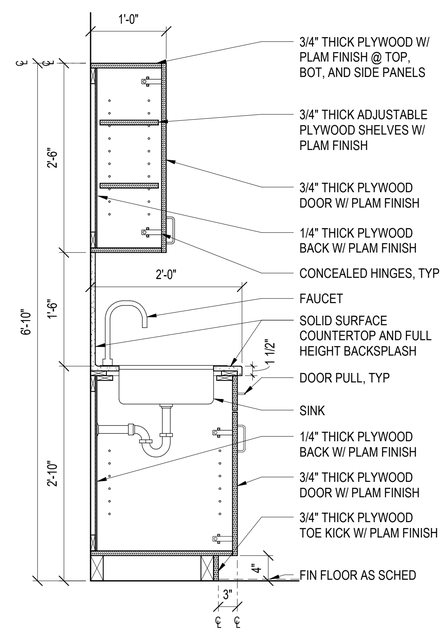

A4 BASE AND WALL CABINET W/ SINK

SCALE: 1" = 1'-0" (A-401)

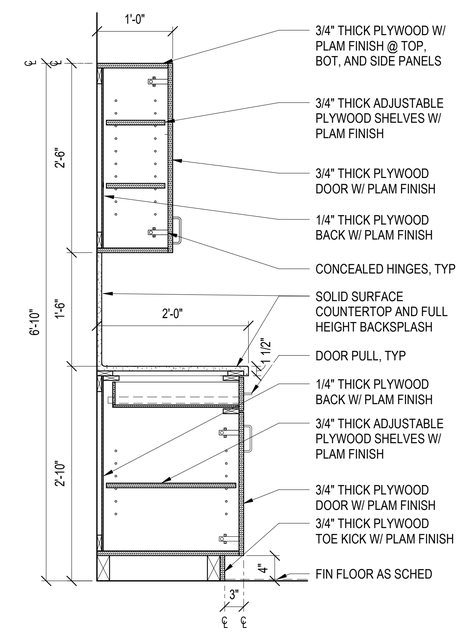

A5 BASE AND WALL CABINET

SCALE: 1" = 1'-0" (A-401)

GRAPHIC SCALE(S)

1" = 1' - 0"

0 6" 1' 2' 3'

SYM	DESCRIPTION	DATE	APPR

NAVFAC

MYLES M. MICHIBATA LICENSED PROFESSIONAL ARCHITECT No. 12367 HAWAII, U.S.A.

LIC. EXP 04/30/26

ASMD LLC.

A/E INFO

APPROVED

FOR COMMANDER NAVFAC

ACTIVITY

NATHANIEL PYRON, MILCON PLANNER, DPPH

SATISFACTORY TO DATE 3/10/2026

DES JG / RLB DRW RLB CHK JG

PM/DM DKS/DMK

BRANCH MANAGER KYM

CHIEF ENG/ARCH KYM

FIRE PROTECTION RYO

DEPARTMENT OF THE NAVY
NAVAL FACILITIES ENGINEERING SYSTEMS COMMAND
NAVFAC PACIFIC
U.S. NAVSUPPACT

NAVAL FACILITIES ENGINEERING SYSTEMS COMMAND – PACIFIC
MAKALAPA, HAWAII

MCB CAMP BLAZ, GUAM

JFY 2022 PROJECT J-875
BATTLE STAFF TRAINING FACILITY

CASEWORK DETAILS

SCALE: AS NOTED

EPROJECT NO.: 1696746

CONSTR. CONTR. NO.

NAVFAC DRAWING NO. 17321966

SHEET 170 OF 468

A-710

DRAWFORM REVISION: 25 AUGUST 2020

A-710
3/12/2026 9:13:03 PM
C:\Users\BSamonte\Documents\BLDG-3875-1696746-A_rbuilintionsnF4LVN.rvt

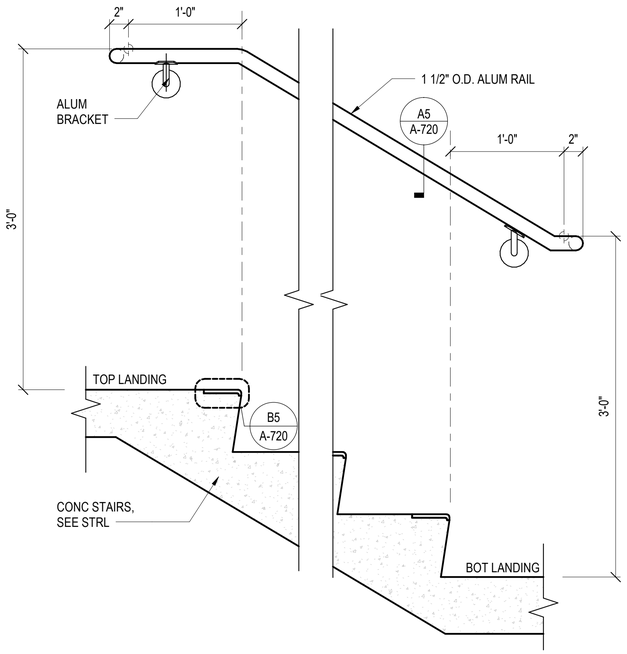

C1 HANDRAIL DETAIL

SCALE: 1 1/2" = 1'-0"

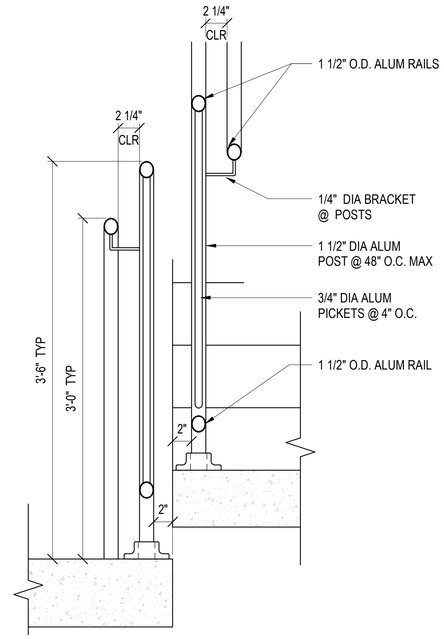

C2 HANDRAIL CROSS SECTION DETAIL

SCALE: 1 1/2" = 1'-0" (A-414)

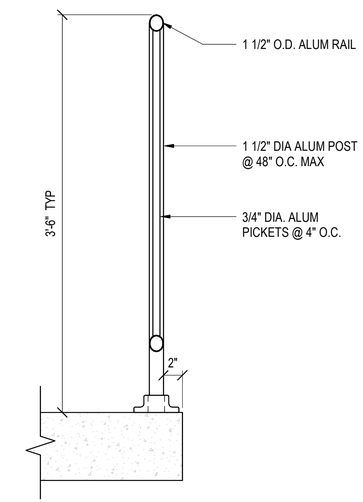

C4 GUARDRAIL DETAIL

SCALE: 1 1/2" = 1'-0" (A-414)

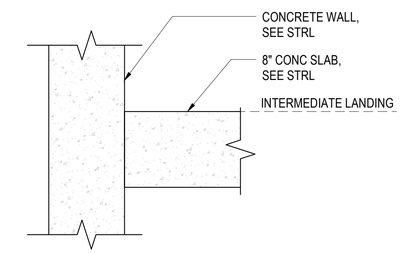

C5 INT METAL DECK SUPPORT DETAIL

SCALE: 1 1/2" = 1'-0" (A-414)

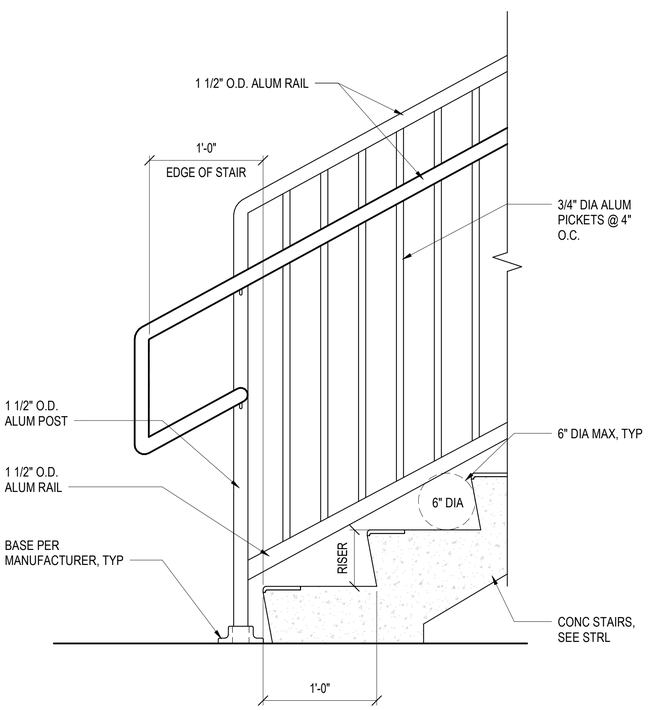

A1 BOTTOM LANDING DETAIL

SCALE: 1 1/2" = 1'-0" (A-414)

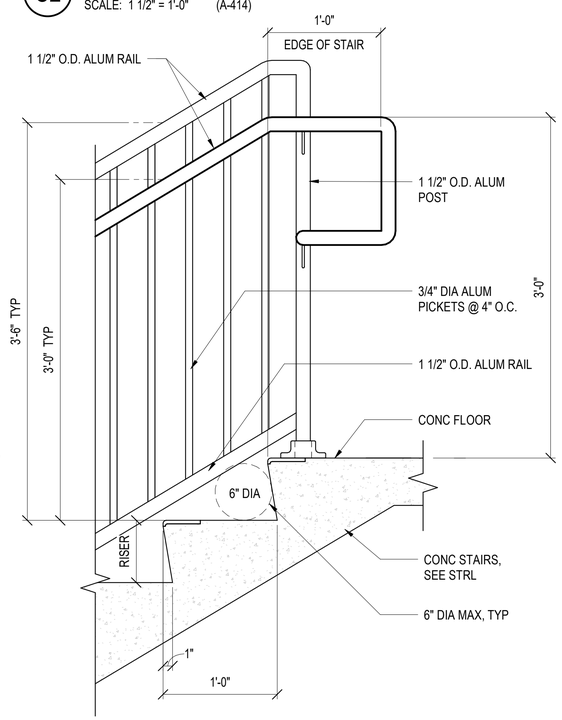

A2 TOP LANDING DETAIL

SCALE: 1 1/2" = 1'-0" (A-414)

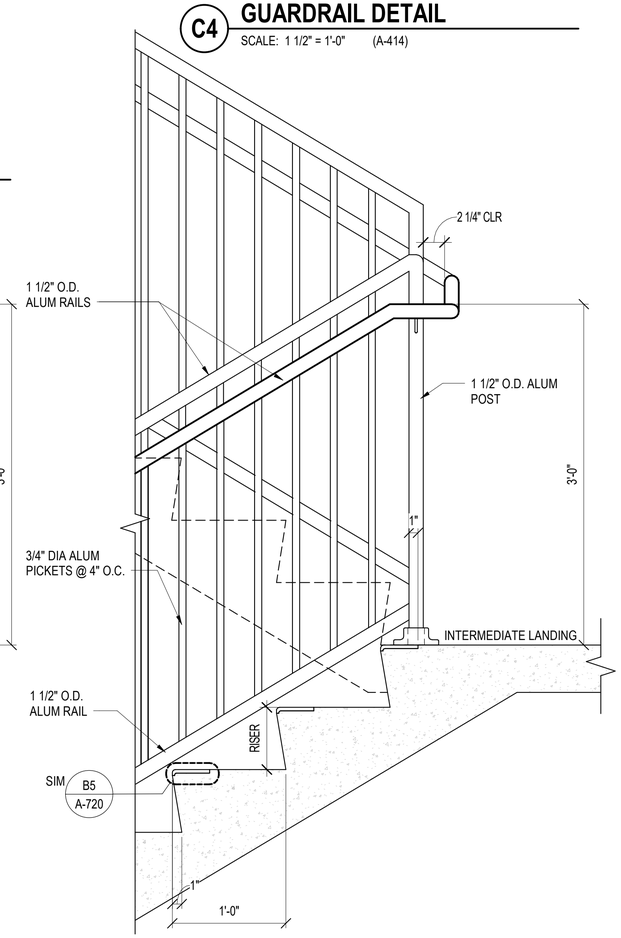

A4 INTERMEDIATE LANDING DETAIL

SCALE: 1 1/2" = 1'-0" (A-414)

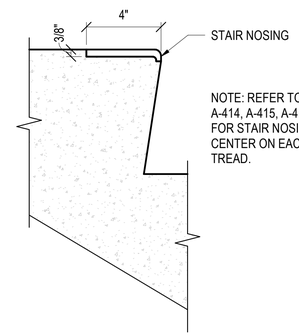

NOTE: REFER TO SHEETS A-414, A-415, A-416, & A-418 FOR STAIR NOSING LENGTH, CENTER ON EACH STAIR TREAD.

B5 STAIR NOSING DETAIL

SCALE: 3" = 1'-0" (A-720)

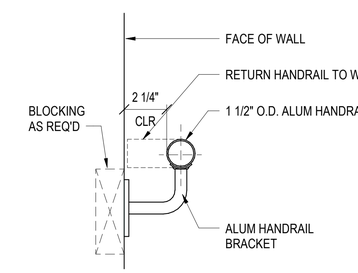

A5 TYPICAL WALL HANDRAIL DETAIL

SCALE: 3" = 1'-0" (A-414)

GENERAL SHEET NOTES

1. ADJECENT STEPS: TREND DEPTH AND RISER HEIGHT VARIATION FROM NOSIING-TO-NOSING SHALL NOT EXCEED 3/16" (4.8MM).
2. LARGEST AND SMALLEST STEPS IN ANY FLIGHT: TREAD DEPTH AND RISER HEIGHT VARIATION FROM NOSING-TO-NOSING SHALL NOT EXCEED 3/8" (9.5MM).

GRAPHIC SCALE(S)

1 1/2" = 1' - 0" 0 3" 6" 9" 1' 2'

3" = 1' - 0" 0 3" 6" 1'

SYM	DESCRIPTION	DATE	APPR

NAVFAC

MYLES M. MICHIBATA LICENSED PROFESSIONAL ARCHITECT No. 12367 HAWAII, U.S.A.
LIC. EXP 04/30/26 SEAL

ASMD LLC. A/E INFO

APPROVED Evan Mizuno
FOR COMMANDER NAVFAC

ACTIVITY: NATHANIEL PYRON, MILCON PLANNER, DPPH

SATISFACTORY TO DATE 3/10/2026

DES JG / RLB	DRW RLB	CHK JG	
PM/DM	DKS/DMK		
BRANCH MANAGER	KYM		
CHIEF ENG/ARCH	KYM		
FIRE PROTECTION	RYO		

DEPARTMENT OF THE NAVY
NAVAL FACILITIES ENGINEERING SYSTEMS COMMAND
NAVFAC PACIFIC
U.S. NAVSUPPACT

NAVAL FACILITIES ENGINEERING SYSTEMS COMMAND ~ PACIFIC
MAKALAPA, HAWAII

MCB CAMP BLAZ, GUAM

JFY 2022 PROJECT J-875
BATTLE STAFF TRAINING FACILITY

RAILING DETAILS

SCALE: AS NOTED
EPROJECT NO.: 1696746
CONSTR. CONTR. NO.
NAVFAC DRAWING NO. 17321967
SHEET 171 OF 468

A-720

DRAWFORM REVISION: 25 AUGUST 2020

3/12/2026 9:13:04 PM A-720
C:\Users\BattlestarDocuments\BLDG-875-1696746-A_railitionsFALVN.rvt

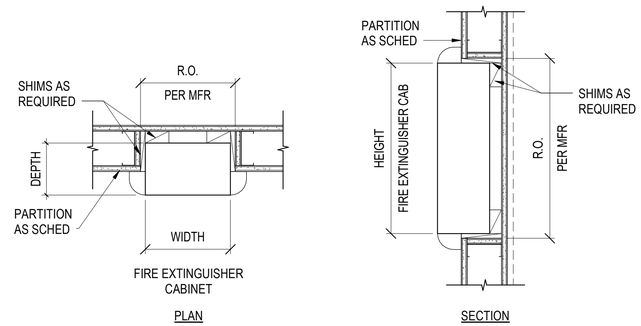

D3 FEC SEMI-RECESSED DETAIL

SCALE: 1 1/2" = 1'-0" (A-401)

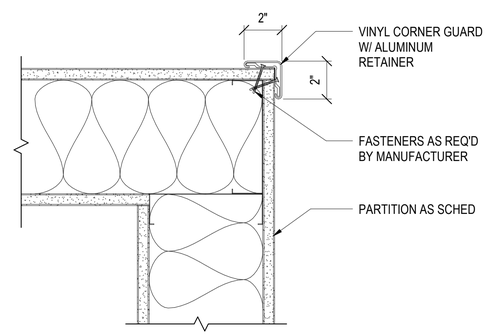

B2 CORNER GUARD DETAIL 1

SCALE: 3" = 1'-0"

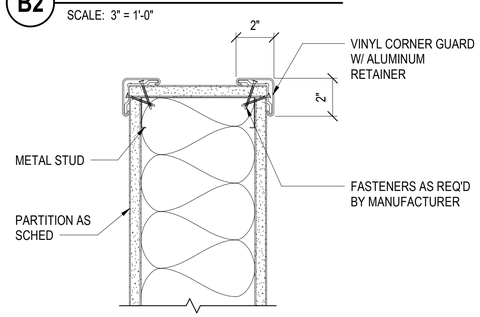

A2 CORNER GUARD DETAIL 2

SCALE: 3" = 1'-0"

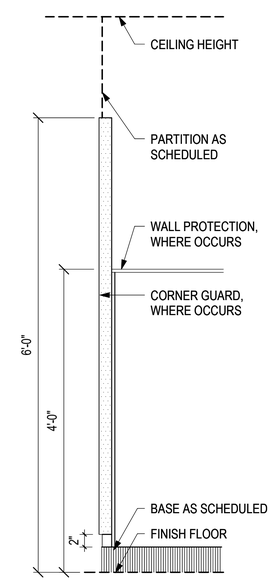

A3 TYP CORNER GUARD ELEV

SCALE: 1" = 1'-0"

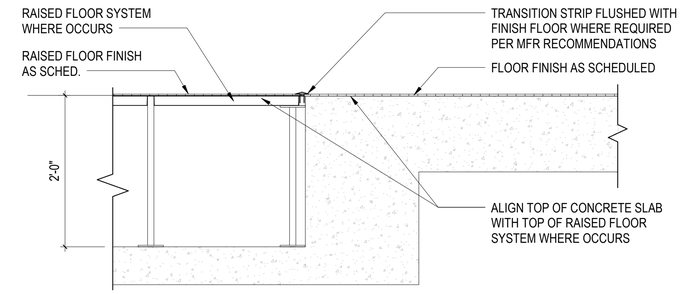

D4 RAISED FLOOR TRANSITION

SCALE: 1" = 1'-0"

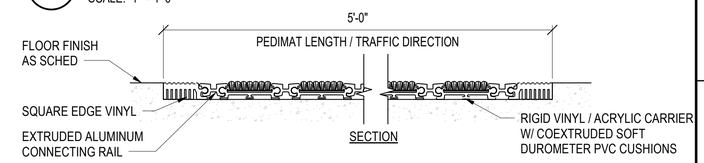

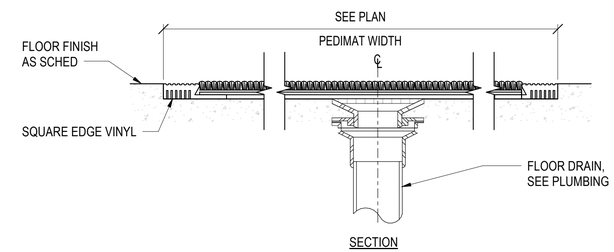

B4 ENTRY MAT DETAIL

SCALE: 6" = 1'-0"

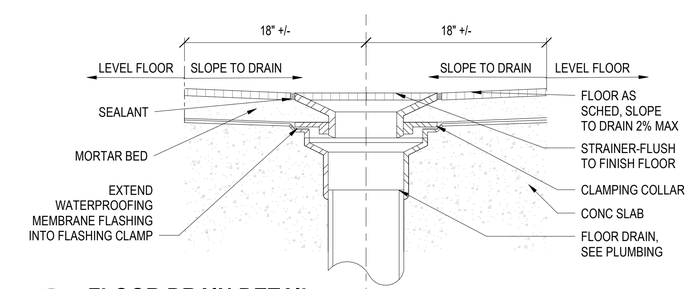

A4 FLOOR DRAIN DETAIL

SCALE: 6" = 1'-0"

GRAPHIC SCALE(S)

1 1/2" = 1' - 0" 0 3" 6" 9" 1' 2'

3" = 1' - 0" 0 3" 6" 1'

SYM	DESCRIPTION	DATE	APPR

NAVFAC

MYLES M. MICHIBATA LICENSED PROFESSIONAL ARCHITECT No. 12367 HAWAII, U.S.A.
LIC. EXP 04/30/26 SEAL

ASMD LLC. A/E INFO

APPROVED Evan Mizel
FOR COMMANDER NAVFAC

ACTIVITY: NATHANIEL PYRON, MILCON PLANNER, DPPH
SATISFACTORY TO DATE 3/10/2026
DES JG / RLB DRW RLB CHK JG
PM/DM DKS/DMK
BRANCH MANAGER KYM
CHIEF ENG/ARCH KYM
FIRE PROTECTION RYO

DEPARTMENT OF THE NAVY
NAVAL FACILITIES ENGINEERING SYSTEMS COMMAND
NAVFAC PACIFIC
U.S. NAVSUPPACT

NAVAL FACILITIES ENGINEERING SYSTEMS COMMAND ~ PACIFIC
MAKALAPA, HAWAII

MCB CAMP BLAZ, GUAM

JFY 2022 PROJECT J-875
BATTLE STAFF TRAINING FACILITY

MISCELLANEOUS INTERIOR DETAILS

SCALE: AS NOTED
EPROJECT NO.: 1696746
CONSTR. CONTR. NO.
NAVFAC DRAWING NO. 17321968
SHEET 172 OF 468

A-730

DRAWFORM REVISION: 25 AUGUST 2020

A-730
3/12/2026 9:13:05 PM
C:\Users\tbaimond\Documents\BLDG-3875-1696746-A_rhabintionsnFdLVN.rvt

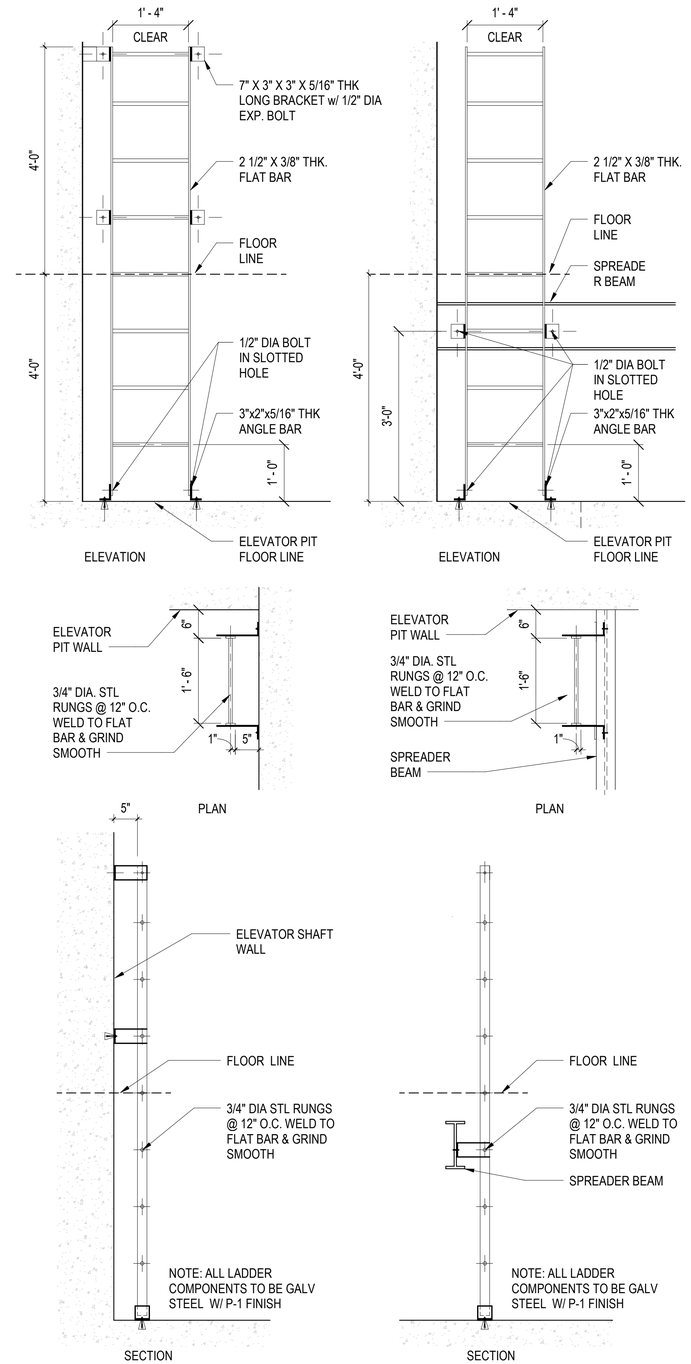

A4 ELEVATOR PIT LADDER DETAILS

SCALE: 3/4" = 1'-0"

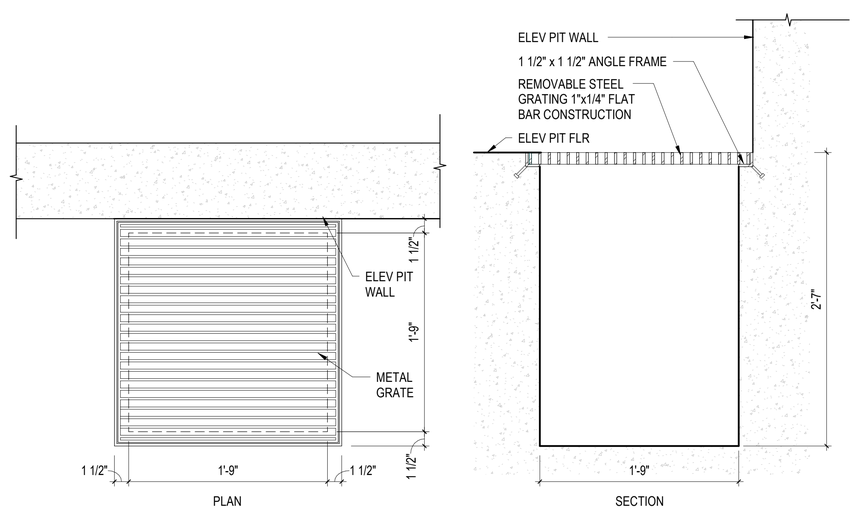

A2 SUMP PIT DETAILS

SCALE: 1 1/2" = 1'-0"

GRAPHIC SCALE(S)

1 1/2" = 1' - 0" 0 3" 6" 9" 1' 2'

3" = 1' - 0" 0 3" 6" 1'

SYM	DESCRIPTION	DATE	APPR

NAVFAC

MYLES M. MICHIBATA LICENSED PROFESSIONAL ARCHITECT No. 12367 HAWAII, U.S.A.

LIC. EXP 04/30/26 SEAL

ASMD LLC. A/E INFO

APPROVED Evan Miyal

FOR COMMANDER NAVFAC

ACTIVITY

NATHANIEL PYRON, MILCON PLANNER, DPPH

SATISFACTORY TO DATE 3/10/2026

DES JG / RLB DRW RLB CHK JG

PM/DM DKS/DMK

BRANCH MANAGER KYM

CHIEF ENG/ARCH KYM

FIRE PROTECTION RYO

DEPARTMENT OF THE NAVY
NAVAL FACILITIES ENGINEERING SYSTEMS COMMAND
NAVFAC PACIFIC
U.S. NAVSUPPACT

NAVAL FACILITIES ENGINEERING SYSTEMS COMMAND ~ PACIFIC
MAKALAPA, HAWAII

MCB CAMP BLAZ, GUAM

JFY 2022 PROJECT J-875
BATTLE STAFF TRAINING FACILITY

MISCELLANEOUS INTERIOR DETAILS

SCALE: AS NOTED

EPROJECT NO.: 1696746

CONSTR. CONTR. NO.

NAVFAC DRAWING NO. 17321969

SHEET 173 OF 468

A-731

DRAWFORM REVISION: 25 AUGUST 2020

3/12/2026 9:13:05 PM A-731
C:\Users\rlbellona\Documents\BLDG-J875-1696746-A_rblellonaF4LVN.rvt

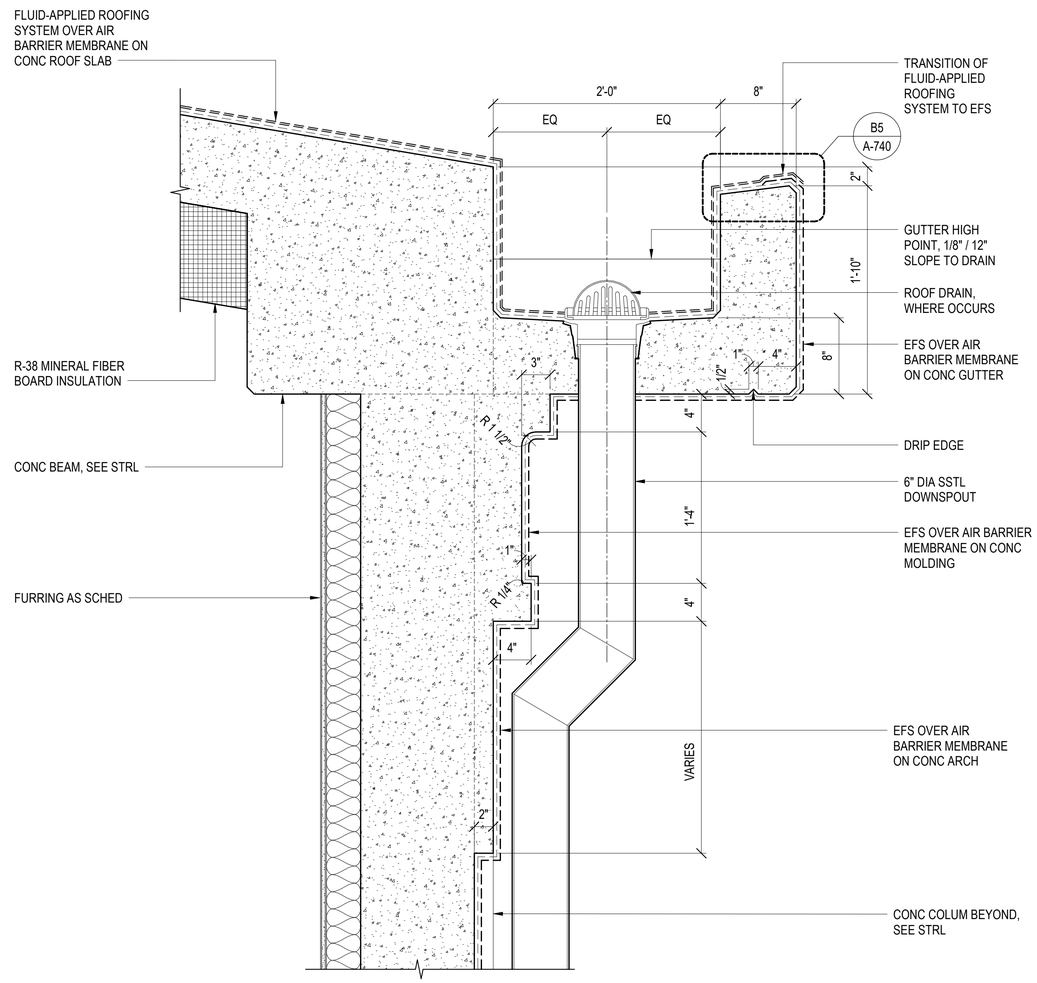

A3 ROOF GUTTER AND CONC MOLDING DETAIL

SCALE: 1 1/2" = 1'-0" (A-310)

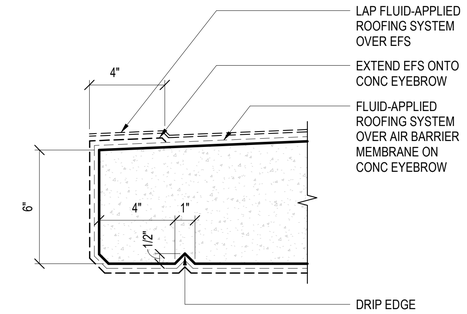

C5 CONC EYEBROW DETAIL

SCALE: 3" = 1'-0" (A-606)

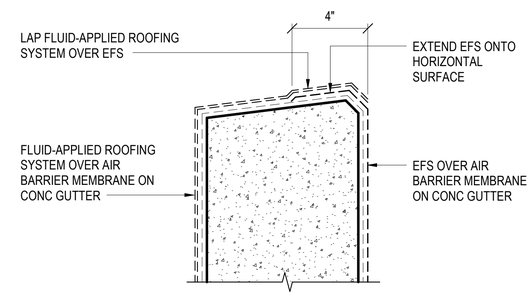

B5 ROOF GUTTER EDGE DETAIL

SCALE: 3" = 1'-0" (A-740)

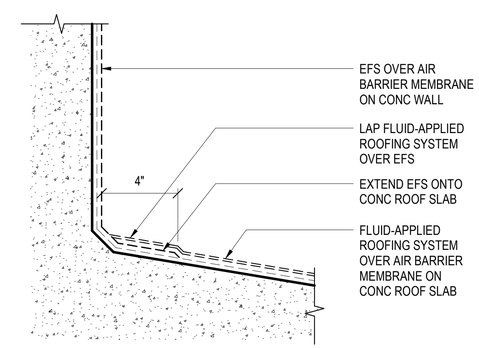

A5 WALL-TO-ROOF TRANSITION DETAIL

SCALE: 3" = 1'-0" (A-311)

GRAPHIC SCALE(S)

1 1/2" = 1' - 0" 0 3" 6" 9" 1' 2'

3" = 1' - 0" 0 3" 6" 1'

SYM	DESCRIPTION	DATE	APPR

NAVFAC

MYLES M. MICHIBATA LICENSED PROFESSIONAL ARCHITECT No. 12367 HAWAII, U.S.A.

LIC. EXP 04/30/26 SEAL

ASMD LLC. A/E INFO

APPROVED Evan Miyazaki FOR COMMANDER NAVFAC

ACTIVITY: NATHANIEL PYRON, MILCON PLANNER, DPPH

SATISFACTORY TO DATE 3/10/2026

DES JG / RLB DRW RLB CHK JG

PM/DM DKS/DMK

BRANCH MANAGER KYM

CHIEF ENG/ARCH KYM

FIRE PROTECTION RYO

DEPARTMENT OF THE NAVY
NAVAL FACILITIES ENGINEERING SYSTEMS COMMAND ~ PACIFIC
NAVFAC PACIFIC
U.S. NAVSUPPACT
NAVAL FACILITIES ENGINEERING SYSTEMS COMMAND
MAKALAPA, HAWAII
MCB CAMP BLAZ, GUAM

JFY 2022 PROJECT J-875
BATTLE STAFF TRAINING FACILITY

ROOF DETAILS

SCALE: AS NOTED

EPROJECT NO.: 1696746

CONSTR. CONTR. NO.

NAVFAC DRAWING NO. 17321970

SHEET 174 OF 468

A-740

DRAWFORM REVISION: 25 AUGUST 2020

3/12/2026 9:13:05 PM A-740
C:\Users\rtBaintona\Documents\BLDG-875-1696746-A_rtbaintonaF4LVN.rvt

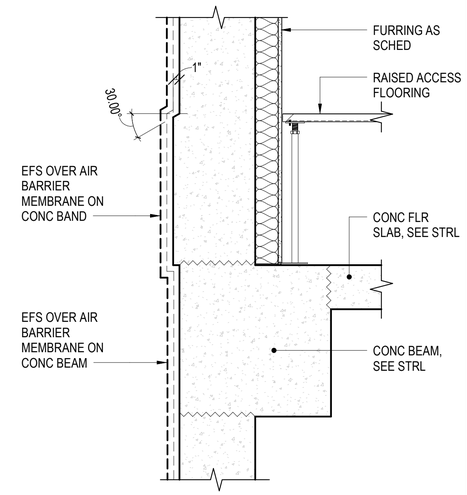

C5 CONC BAND DETAIL

SCALE: 1" = 1'-0" (A-310)

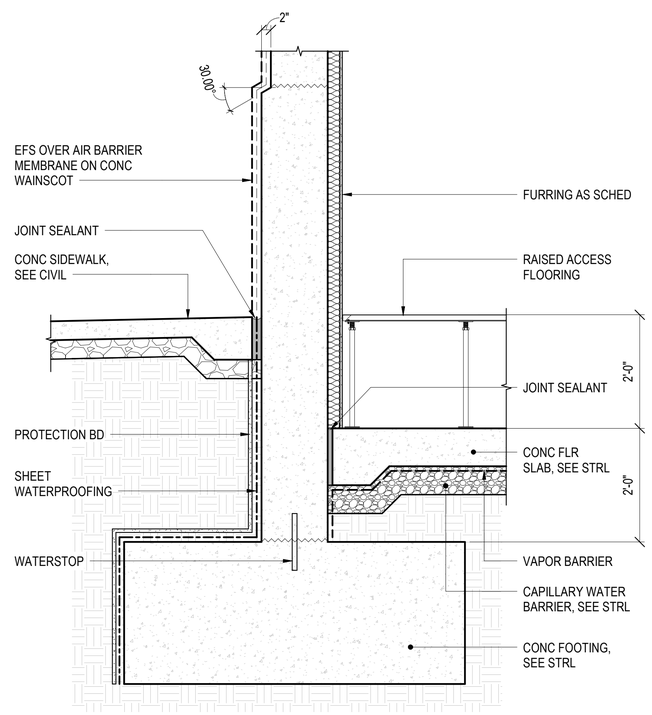

A2 CONC FOOTING DETAIL @ EXTERIOR

SCALE: 3/4" = 1'-0" (A-310)

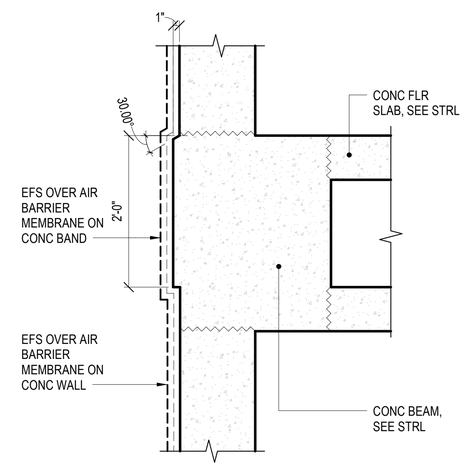

B5 CONC BAND DETAIL

SCALE: 1" = 1'-0" (A-310)

GRAPHIC SCALE(S)

3/4" = 1' - 0" 0 6" 1' 2' 3' 4' 5'

1 1/2" = 1' - 0" 0 3" 6" 9" 1' 2'

3" = 1' - 0" 0 3" 6" 1'

SYM	DESCRIPTION	DATE	APPR

NAVFAC

MYLES M. MICHIBATA LICENSED PROFESSIONAL ARCHITECT No. 12367 HAWAII, U.S.A.
LIC. EXP 04/30/26 BEA.

ASMD LLC. A/E INFO

APPROVED Evan Miguel
FOR COMMANDER NAVFAC

ACTIVITY
NATHANIEL PYRON, MILCON PLANNER, DPPH

SATISFACTORY TO DATE 3/10/2026

DES JG / RLB DRW RLB CHK JG
PM/DM DKS/DMK
BRANCH MANAGER KYM
CHIEF ENG/ARCH KYM
FIRE PROTECTION RYO

DEPARTMENT OF THE NAVY
NAVFAC PACIFIC
U.S. NAVSUPPACT
NAVAL FACILITIES ENGINEERING SYSTEMS COMMAND
NAVAL FACILITIES ENGINEERING SYSTEMS COMMAND ~ PACIFIC
MAKALAPA, HAWAII
MCB CAMP BLAZ, GUAM
JFY 2022 PROJECT J-875
BATTLE STAFF TRAINING FACILITY
MISCELLANEOUS EXTERIOR DETAILS

SCALE: AS NOTED
EPROJECT NO.: 1696746
CONSTR. CONTR. NO.
NAVFAC DRAWING NO. 17321971
SHEET 175 OF 468
A-750

DRAWFORM REVISION: 25 AUGUST 2020

3/12/2020 9:13:06 PM A-750
C:\Users\rblanton\Documents\BLDG-875-1696746-A_rblanton\aFALVN.rvt

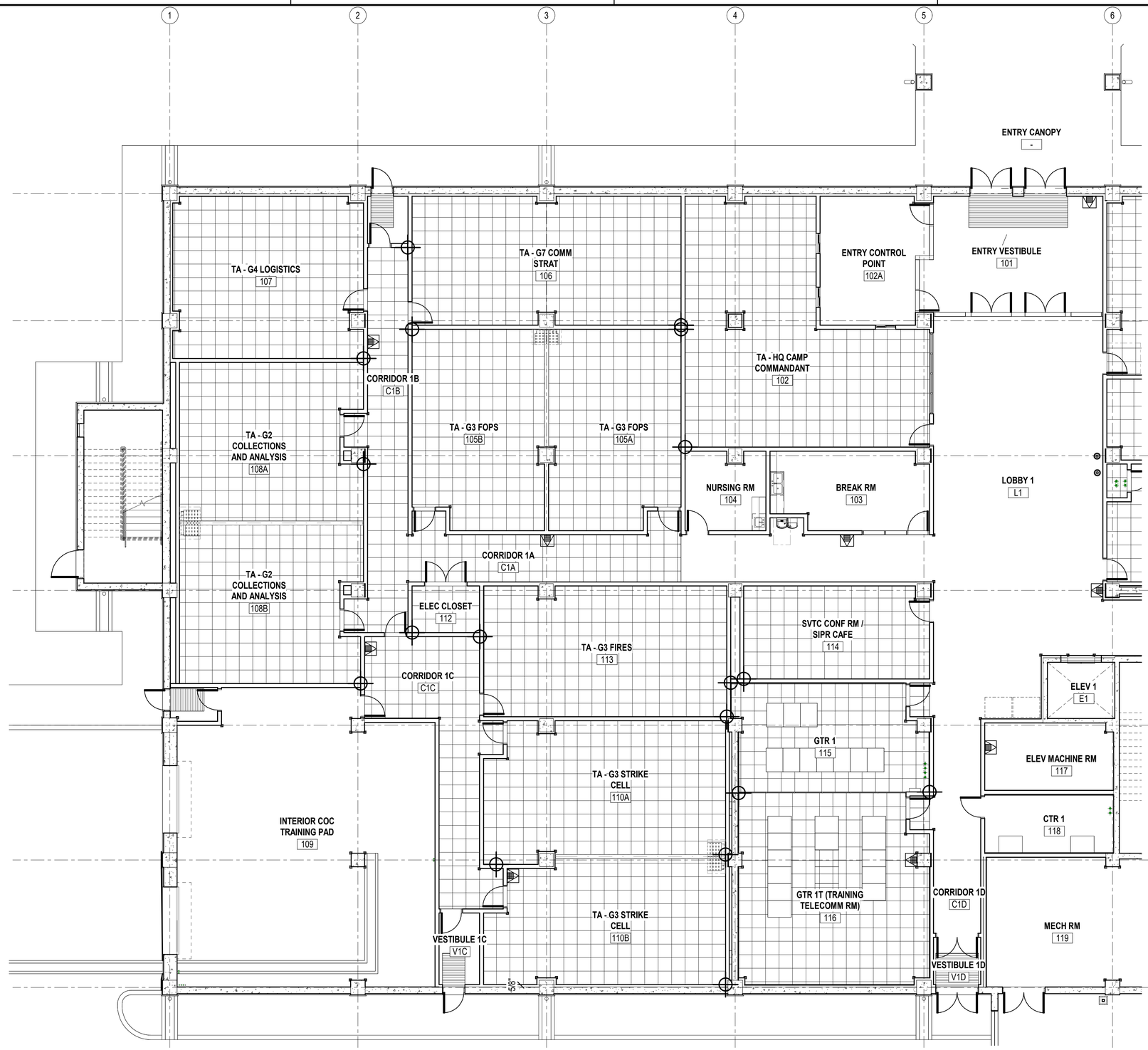

A1 ENLARGED FLOOR PLAN - 1A

SCALE: 1/8" = 1'-0" (A-201)

GENERAL SHEET NOTES

LEGEND

KEY PLAN

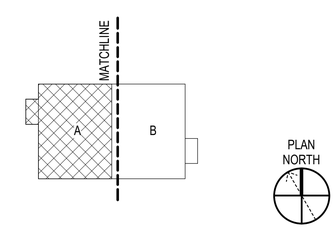

GRAPHIC SCALE(S)

1/8" = 1' - 0" 0 5' 10' 15' 30'

SYM	DESCRIPTION	DATE	APPR

NAVFAC

MYLES M. MICHIBATA LICENSED PROFESSIONAL ARCHITECT No. 12367 HAWAII, U.S.A.
LIC. EXP 04/30/26 SEAL

ASMD LLC. A/E INFO

APPROVED
Evan Mizuno
FOR COMMANDER NAVFAC

ACTIVITY
NATHANIEL PYRON, MILCON PLANNER, DPPH

SATISFACTORY TO DATE	3/10/2026
DES JG / RLB DRW RLB CHK	JG
PMDM	DKS/DMK
BRANCH MANAGER	KYM
CHIEF ENG/ARCH	KYM
FIRE PROTECTION	RYO

DEPARTMENT OF THE NAVY
NAVFAC PACIFIC
NAVAL FACILITIES ENGINEERING SYSTEMS COMMAND ~ PACIFIC
NAVAL FACILITIES ENGINEERING SYSTEMS COMMAND
MAKALAPA, HAWAII
U.S. NAVSUPPACT
MCB CAMP BLAZ, GUAM

JFY 2022 PROJECT J-875
BATTLE STAFF TRAINING FACILITY

ENLARGED RAF FLOOR PLAN - 1A

SCALE: AS NOTED
EPROJECT NO.: 1696746
CONSTR. CONTR. NO.
NAVFAC DRAWING NO. 17321972
SHEET 176 OF 468

A-801

DRAWFORM REVISION: 25 AUGUST 2020

3/12/2026 9:13:07 PM A-801
C:\Users\BattlestarDocuments\BLDG-875-1696746-A_thalitorsaFALVN.rvt

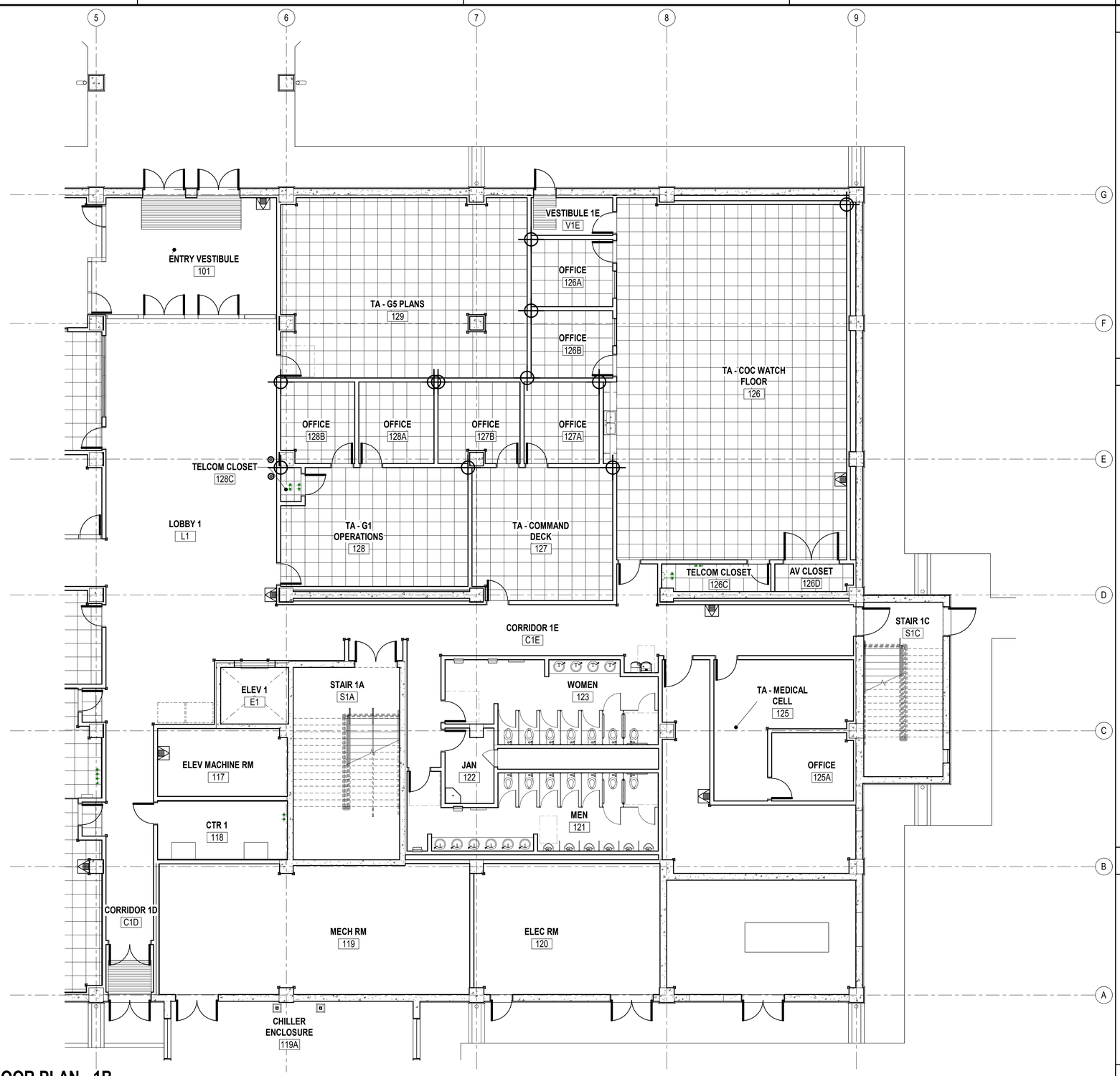

A1 ENLARGED FLOOR PLAN - 1B

SCALE: 1/8" = 1'-0" (A-201)

GENERAL SHEET NOTES

LEGEND

KEY PLAN

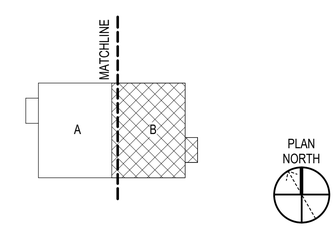

GRAPHIC SCALE(S)

1/8" = 1' - 0" 0 5' 10' 15' 30'

SYM	DESCRIPTION	DATE	APPR

NAVFAC

MYLES M. MICHIBATA LICENSED PROFESSIONAL ARCHITECT No. 12367 HAWAII, U.S.A.
LIC. EXP 04/30/26 SEAL

ASMD LLC. A/E INFO

APPROVED Evan Mizel
FOR COMMANDER NAVFAC

ACTIVITY
NATHANIEL PYRON, MILCON PLANNER, DPPH

SATISFACTORY TO DATE 3/10/2026
DES JG / RLB DRW RLB CHK JG
PMDM DKS/DMK
BRANCH MANAGER KYM
CHIEF ENG/ARCH KYM
FIRE PROTECTION RYO

DEPARTMENT OF THE NAVY
NAVFAC PACIFIC
NAVAL FACILITIES ENGINEERING SYSTEMS COMMAND ~ PACIFIC
NAVAL FACILITIES ENGINEERING SYSTEMS COMMAND
MAKALAPA, HAWAII
U.S. NAVSUPPACT
MCB CAMP BLAZ, GUAM
JFY 2022 PROJECT J-875
BATTLE STAFF TRAINING FACILITY
ENLARGED RAF FLOOR PLAN - 1B

SCALE: AS NOTED
EPROJECT NO.: 1696746
CONSTR. CONTR. NO.

NAVFAC DRAWING NO.
17321973

SHEET 177 OF 468
A-802

DRAWFORM REVISION: 25 AUGUST 2020

A-802
3/12/2026 9:13:08 PM
C:\Users\tBallmond\Documents\BLDG-J875-1696746-A_rbalintonsnF4LVN.rvt

A1 ENLARGED FLOOR PLAN - 2A

SCALE: 1/8" = 1'-0" (A-201)

GENERAL SHEET NOTES

LEGEND

KEY PLAN

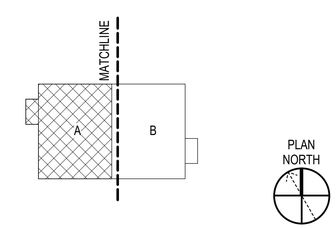

GRAPHIC SCALE(S)

1/8" = 1' - 0" 0 5' 10' 15' 30'

SYM	DESCRIPTION	DATE	APPR

NAVFAC

MYLES M. MICHIBATA LICENSED PROFESSIONAL ARCHITECT No. 12367 HAWAII, U.S.A.
LIC. EXP 04/30/26

ASMD LLC.

APPROVED
Evan Mizell
FOR COMMANDER NAVFAC

ACTIVITY
NATHANIEL PYRON, MILCON PLANNER, DPPH

SATISFACTORY TO DATE	3/10/2026
DES JG / RLB DRW RLB	CHK JG
PMDM	DKS/DMK
BRANCH MANAGER	KYM
CHIEF ENG/ARCH	KYM
FIRE PROTECTION	RYO

DEPARTMENT OF THE NAVY
NAVAL FACILITIES ENGINEERING COMMAND
NAVFAC PACIFIC
U.S. NAVSUPPACT

NAVAL FACILITIES ENGINEERING SYSTEMS COMMAND
NAVAL FACILITIES ENGINEERING SYSTEMS COMMAND ~ PACIFIC
MAKALAPA, HAWAII

MCB CAMP BLAZ, GUAM

JFY 2022 PROJECT J-875
BATTLE STAFF TRAINING FACILITY

ENLARGED RAF FLOOR PLAN - 2A

SCALE: AS NOTED
EPROJECT NO.: 1696746
CONSTR. CONTR. NO.
NAVFAC DRAWING NO. 17321974
SHEET 178 OF 468

A-803

DRAWFORM REVISION: 25 AUGUST 2020

3/12/2026 9:13:09 PM A-803
C:\Users\rbillerton\Documents\BLDG-875-1696746-A_rbillertonFALVN.rvt

A1 ENLARGED FLOOR PLAN - 2B

SCALE: 1/8" = 1'-0" (A-201)

GENERAL SHEET NOTES

LEGEND

KEY PLAN

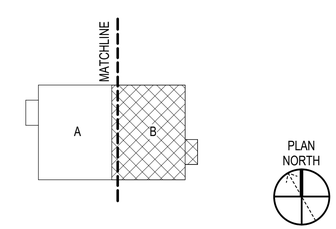

GRAPHIC SCALE(S)

1/16" = 1' - 0" 0 5' 10' 20' 30' 60'

SYM	DESCRIPTION	DATE	APPR

NAVFAC

MYLES M. MICHIBATA LICENSED PROFESSIONAL ARCHITECT No. 12367 HAWAII, U.S.A.
LIC. EXP 04/30/26 SEAL

ASMD LLC. A/E INFO

APPROVED Evan Miyal
FOR COMMANDER NAVFAC

ACTIVITY
NATHANIEL PYRON, MILCON PLANNER, DPPH

SATISFACTORY TO DATE	3/10/2026		
DES JG / RLB	DRW RLB	CHK JG	
PM/DM	DKS/DMK		
BRANCH MANAGER	KYM		
CHIEF ENG/ARCH	KYM		
FIRE PROTECTION	RYO		

DEPARTMENT OF THE NAVY
NAVFAC PACIFIC
U.S. NAVSUPPACT

NAVAL FACILITIES ENGINEERING SYSTEMS COMMAND
NAVAL FACILITIES ENGINEERING SYSTEMS COMMAND ~ PACIFIC
MAKALAPA, HAWAII

MCB CAMP BLAZ, GUAM

JFY 2022 PROJECT J-875
BATTLE STAFF TRAINING FACILITY

ENLARGED RAF FLOOR PLAN - 2B

SCALE: AS NOTED
EPROJECT NO.: 1696746
CONSTR. CONTR. NO.

NAVFAC DRAWING NO.
17321975

SHEET 179 OF 468

A-804

DRAWFORM REVISION: 25 AUGUST 2020

3/12/2026 9:13:10 PM A-804
C:\Users\BaliMonst\Documents\BLDG-3875-1696746-A_rhubintonsFr4LVN.rvt

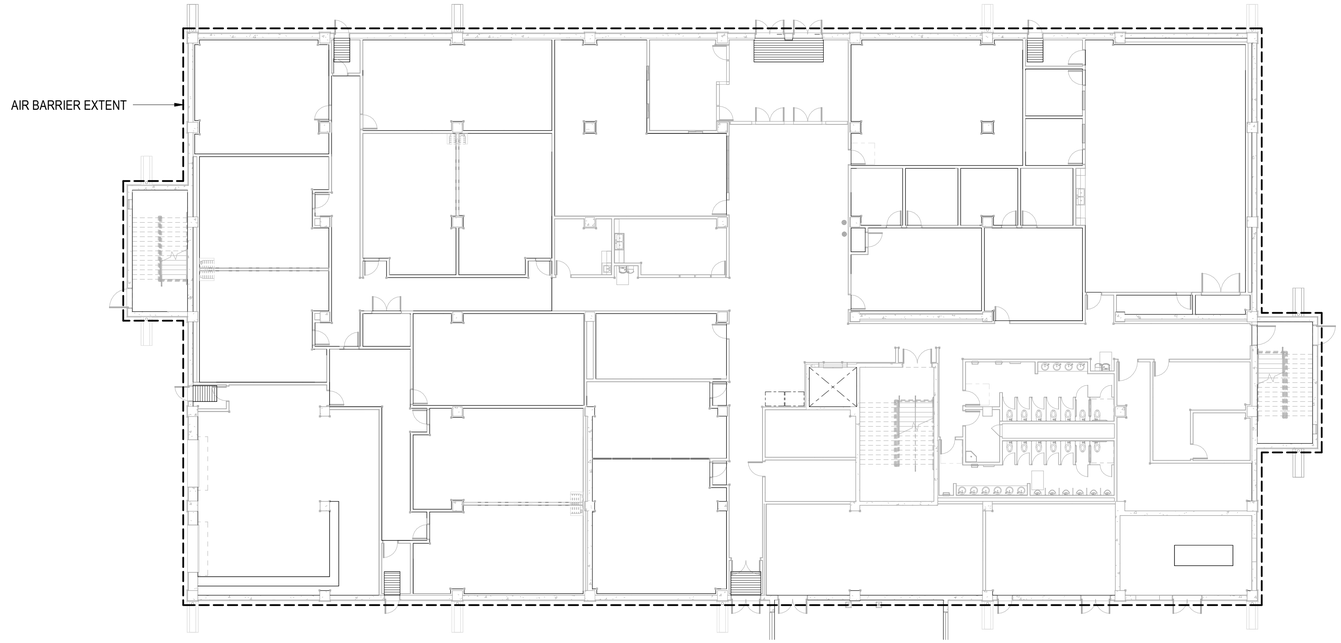

C2 FIRST FLOOR PLAN AIR BARRIER DIAGRAM

SCALE: 1/16" = 1'-0"

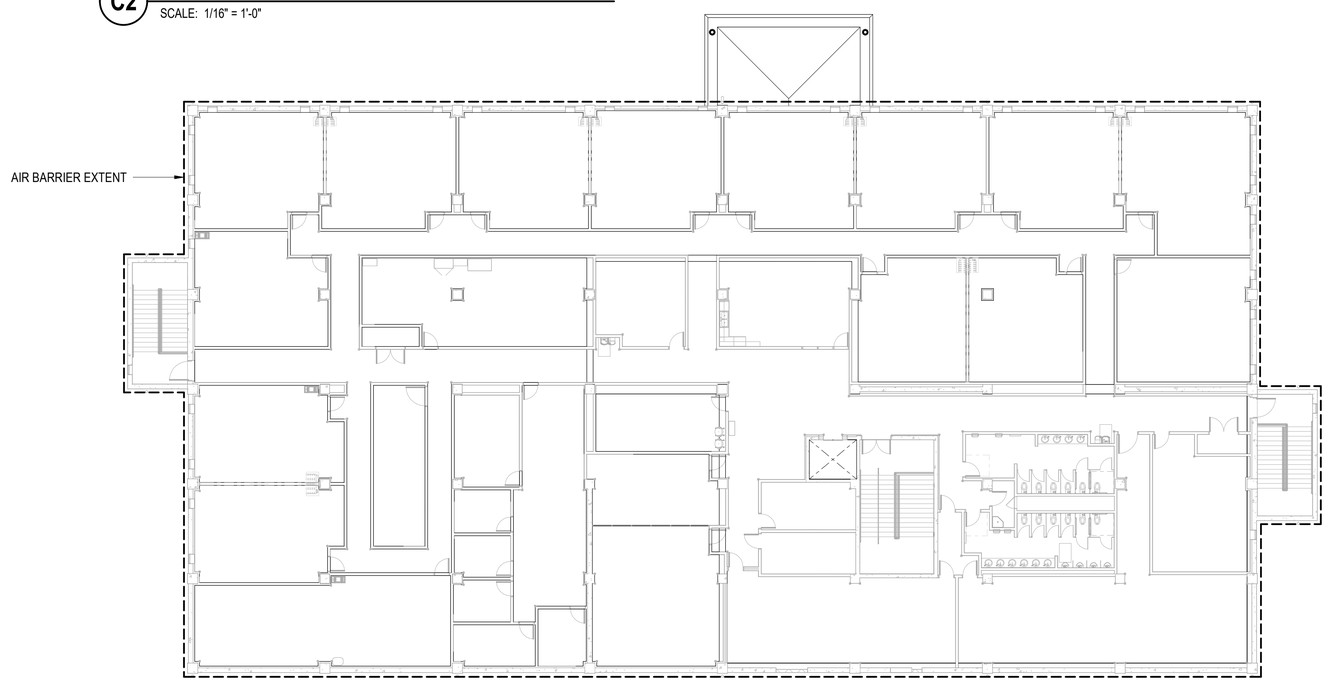

A2 SECOND FLOOR PLAN AIR BARRIER DIAGRAM

SCALE: 1/16" = 1'-0"

GENERAL SHEET NOTES

A. PROVIDE CONTINUOUS AIR BARRIER FOR THE ENTIRE EXTERIOR BUILDING ENVELOPE. JOINTS, AIR BARRIER COMPONENTS AND ASSEMBLIES ARE AS FOLLOWS:

ROOF ASSEMBLIES:

FLUID APPLIED ROOFING SYSTEM OVER CONCRETE.

WALL ASSEMBLIES:

EXTERIOR FINISH SYSTEM OVER CONCRETE WALL. PROVIDE MEMBRANE AIR BARRIER AT ALL JOINTS AND PENETRATIONS.

1. OVERLAP FLEXIBLE REINFORCED MESH OVER JOINTS BY 4".
2. OVERLAP FLUID APPLIED AIR BARRIERS OVER EDGE OF MESH BY 4".
3. INSTALL SPRAY TILE FINISH PER MANUFACTURER'S RECOMMENDATIONS.

FLOOR ASSEMBLIES:

CONC SLAB WITH VAPOR BARRIER (AIR BARRIER) ON COMPACTED BASE COURSE.

B. BUILDING IS REQUIRED TO HAVE A COMPREHENSIVE AIR BUILDING IS REQUIRED TO HAVE A COMPREHENSIVE AIR BARRIER PER 07 27 10 BUILDING AIR BARRIER SYSTEM. AIR BARRIER PERFORMANCE MUST BE TESTED AND CONFIRMED PER SPECIFICATION SECTIONS 07 05 23.

C. PLANS AND SECTION THIS SHEET PROVIDE A SCHEMATIC REPRESENTATION OF AIR BARRIER LOCATION AND INTERNAL FACILITY VOLUME WITHIN THE AIR BARRIER PERIMETER

D. SEAL AIR BARRIER MEMBRANE PENETRATIONS CAUSED BY FIRE PROTECTION, PLUMBING, MECHANICAL, ELECTRICAL AND TELECOMMUNICATIONS SYSTEMS AND COMPONENTS. PENETRATIONS THROUGH FLOOR, ROOF, AND WALL ASSEMBLIES SHALL BE SEALED TO CREATE A CONTINUOUS AIR BARRIER AND MEET FIRE RESISTANCE CRITERIA OF RATED ASSEMBLIES.

E. SEE WALL SECTIONS AND DETAILS FOR ADDITIONAL INFORMATION ON COORDINATION OF AIR BARRIER MEMBRANE AND INTEGRATION OF THE AIR BARRIER WITH VAPOR RETARDERS.

F. VERIFY INTEGRITY AND PERFORMANCE OF AIR BARRIER PRIOR TO CONCEALING WITH OTHER MATERIALS.

* FLUID APPLIED MEMBRANE AIR BARRIERS IS TO BE APPLIED TO ALL JOINTS AND PENETRATIONS BEFORE THE DIRECT-APPLIED EXTERIOR FINISH SYSTEMS

AIR BARRIER

ENCLOSURE CALCULATIONS
ENCLOSURE TOTAL AREA: 23, 682 SF
HEIGHT OF BUILDING: 42 FT

1. FLOOR AREA: 55, 701 SF
2. ROOF AREA: 59, 308 SF
3. NORTH WALL AREA: 8, 011 SF
4. SOUTH WALL AREA: 8, 011 SF
5. EAST WALL AREA: 3, 830 SF
6. WEST WALL AREA: 3, 830 SF

KEY PLAN

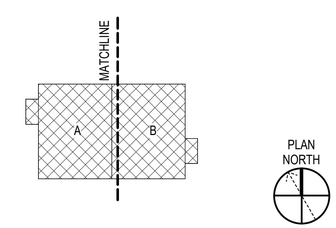

GRAPHIC SCALE(S)

1/16" = 1' - 0" 0 5' 10' 20' 30' 60'

SYM	DESCRIPTION	DATE	APPR

NAVFAC

MYLES M. MICHIBATA LICENSED PROFESSIONAL ARCHITECT No. 12367 HAWAII, U.S.A.
LIC. EXP 04/30/26 SEAL

ASMD LLC. A/E INFO

APPROVED Evan Mizel
FOR COMMANDER NAVFAC

ACTIVITY
NATHANIEL PYRON, MILCON PLANNER, DPPH

SATISFACTORY TO DATE 3/10/2026

DES JG / RLB	DRW RLB	CHK JG	
PM/DM			DKS/DMK
BRANCH MANAGER			KYM
CHIEF ENG/ARCH			KYM
FIRE PROTECTION			RYO

DEPARTMENT OF THE NAVY
NAVAL FACILITIES ENGINEERING SYSTEMS COMMAND
NAVFAC PACIFIC
U.S. NAVSUPPACT

NAVAL FACILITIES ENGINEERING SYSTEMS COMMAND ~ PACIFIC
MAKALAPA, HAWAII

MCB CAMP BLAZ, GUAM

JFY 2022 PROJECT J-875
BATTLE STAFF TRAINING FACILITY

AIR BARRIER DIAGRAM - FLOOR PLANS

SCALE: AS NOTED
EPROJECT NO.: 1696746
CONSTR. CONTR. NO.

NAVFAC DRAWING NO.
17321976

SHEET 180 OF 468

A-901

DRAWFORM REVISION: 25 AUGUST 2020

3/12/2026 9:13:12 PM A-901
C:\Users\BBarnard\Documents\BLDG-875-1696746-A_rbaintionsnF4LVN.rvt

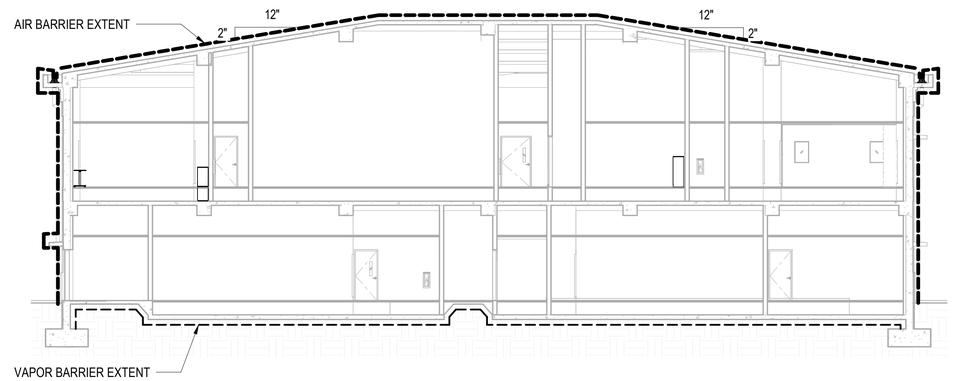

C1 AIR BARRIER DIAGRAM CROSS SECTION

SCALE: 3/32" = 1'-0"

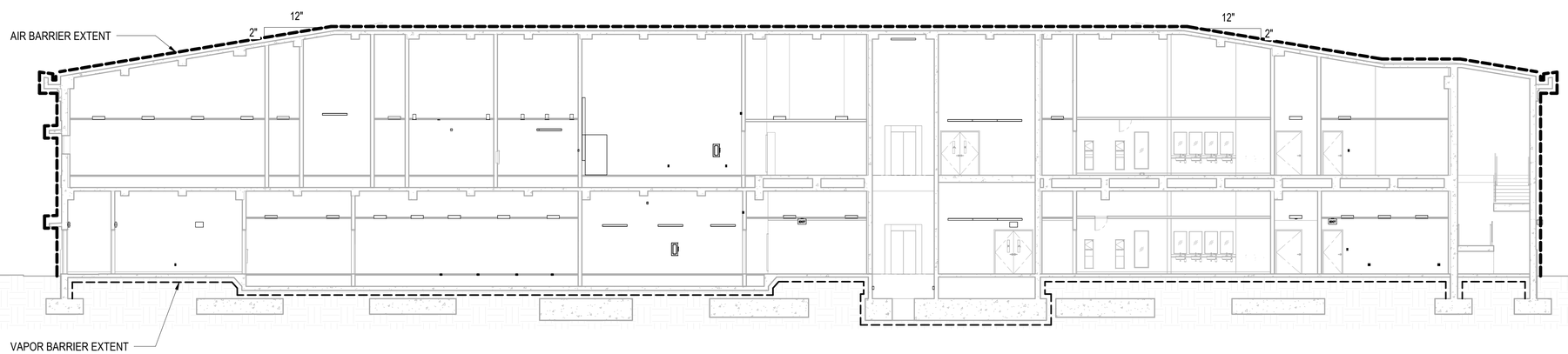

A1 AIR BARRIER DIAGRAM LONGITUDINAL SECTION

SCALE: 3/32" = 1'-0"

GENERAL SHEET NOTES

A. PROVIDE CONTINUOUS AIR BARRIER FOR THE ENTIRE EXTERIOR BUILDING ENVELOPE. JOINTS, AIR BARRIER COMPONENTS AND ASSEMBLIES ARE AS FOLLOWS:

ROOF ASSEMBLIES:

FLUID APPLIED ROOFING SYSTEM OVER CONCRETE.

WALL ASSEMBLIES:

EXTERIOR FINISH SYSTEM OVER CONCRETE WALL. PROVIDE MEMBRANE AIR BARRIER AT ALL JOINTS AND PENETRATIONS.

1. OVERLAP FLEXIBLE REINFORCED MESH OVER JOINTS BY 4".
2. OVERLAP FLUID APPLIED AIR BARRIERS OVER EDGE OF MESH BY 4".
3. INSTALL SPRAY TILE FINISH PER MANUFACTURER'S RECOMMENDATIONS.

FLOOR ASSEMBLIES:

CONC SLAB WITH VAPOR BARRIER (AIR BARRIER) ON COMPACTED BASE COURSE.

B. BUILDING IS REQUIRED TO HAVE A COMPREHENSIVE AIR BUILDING IS REQUIRED TO HAVE A COMPREHENSIVE AIR BARRIER PER 07 27 10 BUILDING AIR BARRIER SYSTEM. AIR BARRIER PERFORMANCE MUST BE TESTED AND CONFIRMED PER SPECIFICATION SECTIONS 07 05 23.

C. PLANS AND SECTION THIS SHEET PROVIDE A SCHEMATIC REPRESENTATION OF AIR BARRIER LOCATION AND INTERNAL FACILITY VOLUME WITHIN THE AIR BARRIER PERIMETER

D. SEAL AIR BARRIER MEMBRANE PENETRATIONS CAUSED BY FIRE PROTECTION, PLUMBING, MECHANICAL, ELECTRICAL AND TELECOMMUNICATIONS SYSTEMS AND COMPONENTS. PENETRATIONS THROUGH FLOOR, ROOF, AND WALL ASSEMBLIES SHALL BE SEALED TO CREATE A CONTINUOUS AIR BARRIER AND MEET FIRE RESISTANCE CRITERIA OF RATED ASSEMBLIES.

E. SEE WALL SECTIONS AND DETAILS FOR ADDITIONAL INFORMATION ON COORDINATION OF AIR BARRIER MEMBRANE AND INTEGRATION OF THE AIR BARRIER WITH VAPOR RETARDERS.

F. VERIFY INTEGRITY AND PERFORMANCE OF AIR BARRIER PRIOR TO CONCEALING WITH OTHER MATERIALS.

* FLUID APPLIED MEMBRANE AIR BARRIERS IS TO BE APPLIED TO ALL JOINTS AND PENETRATIONS BEFORE THE DIRECT-APPLIED EXTERIOR FINISH SYSTEMS

AIR BARRIER

ENCLOSURE CALCULATIONS
ENCLOSURE TOTAL AREA: 23, 682 SF
HEIGHT OF BUILDING: 42 FT

1. FLOOR AREA: 55, 701 SF
2. ROOF AREA: 59, 308 SF
3. NORTH WALL AREA: 8, 011 SF
4. SOUTH WALL AREA: 8, 011 SF
5. EAST WALL AREA: 3, 830 SF
6. WEST WALL AREA: 3, 830 SF

KEY PLAN

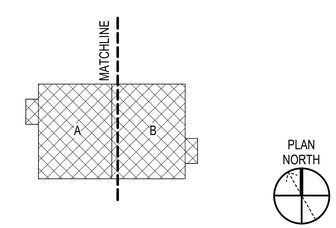

GRAPHIC SCALE(S)

3/32" = 1' - 0" 0 5' 10' 20' 40'

SYM	DESCRIPTION	DATE	APPR

NAVFAC

MYLES M. MICHIBATA LICENSED PROFESSIONAL ARCHITECT No. 12367 HAWAII, U.S.A.
LIC. EXP 04/30/26 SEAL

ASMD LLC. A/E INFO

APPROVED Evan Mizel
FOR COMMANDER NAVFAC

ACTIVITY
NATHANIEL PYRON, MILCON PLANNER, DPPH

SATISFACTORY TO DATE 3/10/2026

DES JG / RLB	DRW RLB	CHK JG	
PM/DM		DKS/DMK	
BRANCH MANAGER		KYM	
CHIEF ENG/ARCH		KYM	
FIRE PROTECTION		RYO	

DEPARTMENT OF THE NAVY
NAVAL FACILITIES ENGINEERING SYSTEMS COMMAND
NAVFAC PACIFIC
U.S. NAVSUPPACT

NAVAL FACILITIES ENGINEERING SYSTEMS COMMAND ~ PACIFIC
MAKALAPA, HAWAII

MCB CAMP BLAZ, GUAM

JFY 2022 PROJECT J-875
BATTLE STAFF TRAINING FACILITY

AIR BARRIER DIAGRAM

SCALE: AS NOTED
EPROJECT NO.: 1696746
CONSTR. CONTR. NO.

NAVFAC DRAWING NO.
17321977

SHEET 181 OF 468

A-902

DRAWFORM REVISION: 25 AUGUST 2020

A-902
3/12/2026 9:13:13 PM
C:\Users\BSamonte\Documents\BLDG-3875-1696746\A_rbaintionsnFdLVN.rvt

STATIC HORIZONTAL JOINT

(NOT TO SCALE)

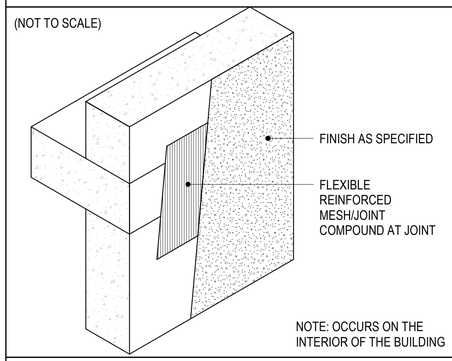

PIPE OR UTILITY PENETRATION

(NOT TO SCALE)

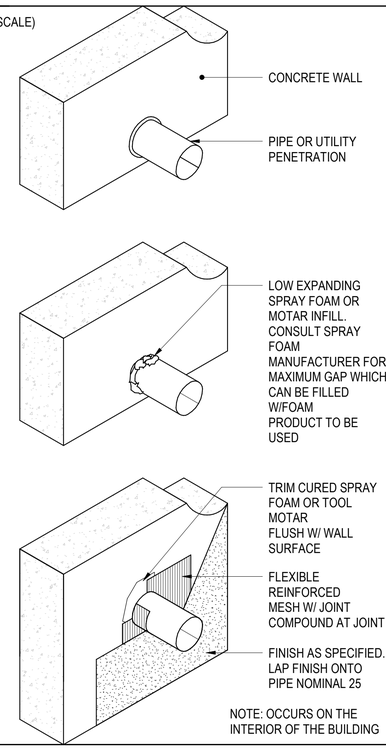

WALL CONNECTION JOINT

(NOT TO SCALE)

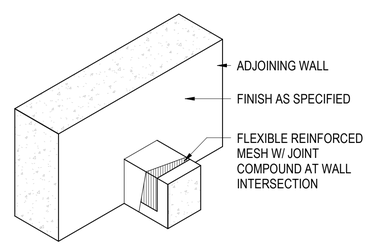

DOOR OPENING

(NOT TO SCALE)

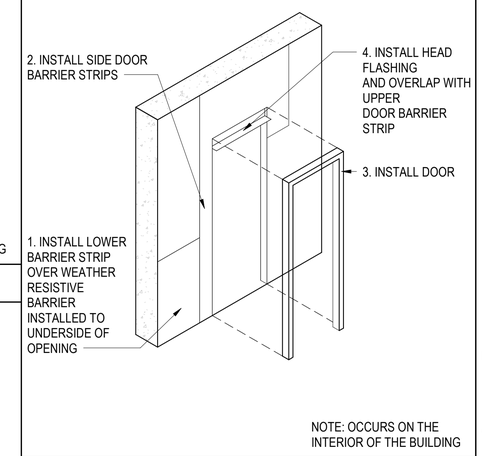

WINDOW OPENING

(NOT TO SCALE)

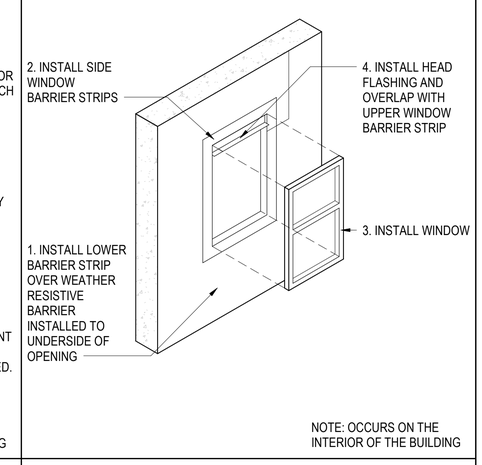

WALL CONNECTION JOINT

(NOT TO SCALE)

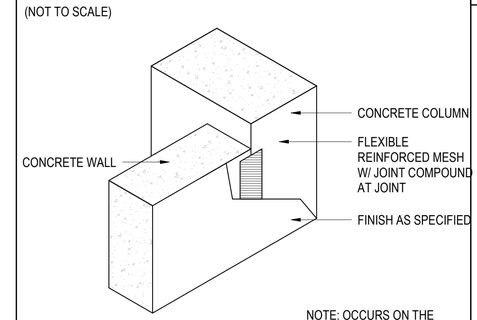

GENERAL SHEET NOTES

A. PROVIDE CONTINUOUS AIR BARRIER FOR THE ENTIRE EXTERIOR BUILDING ENVELOPE. JOINTS, AIR BARRIER COMPONENTS AND ASSEMBLIES ARE AS FOLLOWS:

ROOF ASSEMBLIES:

FLUID APPLIED ROOFING SYSTEM OVER CONCRETE.

WALL ASSEMBLIES:

EXTERIOR FINISH SYSTEM OVER CONCRETE WALL. PROVIDE MEMBRANE AIR BARRIER AT ALL JOINTS AND PENETRATIONS.

1. OVERLAP FLEXIBLE REINFORCED MESH OVER JOINTS BY 4".
2. OVERLAP FLUID APPLIED AIR BARRIERS OVER EDGE OF MESH BY 4".
3. INSTALL SPRAY TILE FINISH PER MANUFACTURER'S RECOMMENDATIONS.

FLOOR ASSEMBLIES:

CONC SLAB WITH VAPOR BARRIER (AIR BARRIER) ON COMPACTED BASE COURSE.

B. BUILDING IS REQUIRED TO HAVE A COMPREHENSIVE AIR BUILDING IS REQUIRED TO HAVE A COMPREHENSIVE AIR BARRIER PER 07 27 10 BUILDING AIR BARRIER SYSTEM. AIR BARRIER PERFORMANCE MUST BE TESTED AND CONFIRMED PER SPECIFICATION SECTIONS 07 05 23.

C. PLANS AND SECTION THIS SHEET PROVIDE A SCHEMATIC REPRESENTATION OF AIR BARRIER LOCATION AND INTERNAL FACILITY VOLUME WITHIN THE AIR BARRIER PERIMETER

D. SEAL AIR BARRIER MEMBRANE PENETRATIONS CAUSED BY FIRE PROTECTION, PLUMBING, MECHANICAL, ELECTRICAL AND TELECOMMUNICATIONS SYSTEMS AND COMPONENTS. PENETRATIONS THROUGH FLOOR, ROOF, AND WALL ASSEMBLIES SHALL BE SEALED TO CREATE A CONTINUOUS AIR BARRIER AND MEET FIRE RESISTANCE CRITERIA OF RATED ASSEMBLIES.

E. SEE WALL SECTIONS AND DETAILS FOR ADDITIONAL INFORMATION ON COORDINATION OF AIR BARRIER MEMBRANE AND INTEGRATION OF THE AIR BARRIER WITH VAPOR RETARDERS.

F. VERIFY INTEGRITY AND PERFORMANCE OF AIR BARRIER PRIOR TO CONCEALING WITH OTHER MATERIALS.

* FLUID APPLIED MEMBRANE AIR BARRIERS IS TO BE APPLIED TO ALL JOINTS AND PENETRATIONS BEFORE THE DIRECT-APPLIED EXTERIOR FINISH SYSTEMS

AIR BARRIER

ENCLOSURE CALCULATIONS
ENCLOSURE TOTAL AREA: 23, 682 SF
HEIGHT OF BUILDING: 42 FT

1. FLOOR AREA: 55, 701 SF
2. ROOF AREA: 59, 308 SF
3. NORTH WALL AREA: 8, 011 SF
4. SOUTH WALL AREA: 8, 011 SF
5. EAST WALL AREA: 3, 830 SF
6. WEST WALL AREA: 3, 830 SF

KEY PLAN

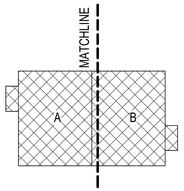

SYM	DESCRIPTION	DATE	APPR

NAVFAC

MYLES M. MICHIBATA
LICENSED PROFESSIONAL ARCHITECT
No. 12367
HAWAII, U.S.A.
LIC. EXP 04/30/26

ASMD LLC.
A/E INFO

APPROVED
FOR COMMANDER NAVFAC

ACTIVITY
NATHANIEL PYRON, MILCON PLANNER, DPPH

SATISFACTORY TO DATE	3/10/2026
DES JG / RLB DRW RLB CHK JG	
PM/DM	DKS/DMK
BRANCH MANAGER	KYM
CHIEF ENG/ARCH	KYM
FIRE PROTECTION	RYO

DEPARTMENT OF THE NAVY
NAVFAC PACIFIC
U.S. NAVSUPPACT
NAVAL FACILITIES ENGINEERING SYSTEMS COMMAND ~ PACIFIC
NAVAL FACILITIES ENGINEERING SYSTEMS COMMAND
MAKALAPA, HAWAII
MCB CAMP BLAZ, GUAM
JFY 2022 PROJECT J-875
BATTLE STAFF TRAINING FACILITY
AIR BARRIER DETAILS

SCALE: AS NOTED
EPROJECT NO.: 1696746
CONSTR. CONTR. NO.
NAVFAC DRAWING NO. 17321978
SHEET 182 OF 468
A-903

DRAWFORM REVISION: 25 AUGUST 2020

3/12/2026 9:13:13 PM A-903
C:\Users\BaliMonte\Documents\BLDG-J875-1696746-A_rbalintonsnFr4LVN.rvt

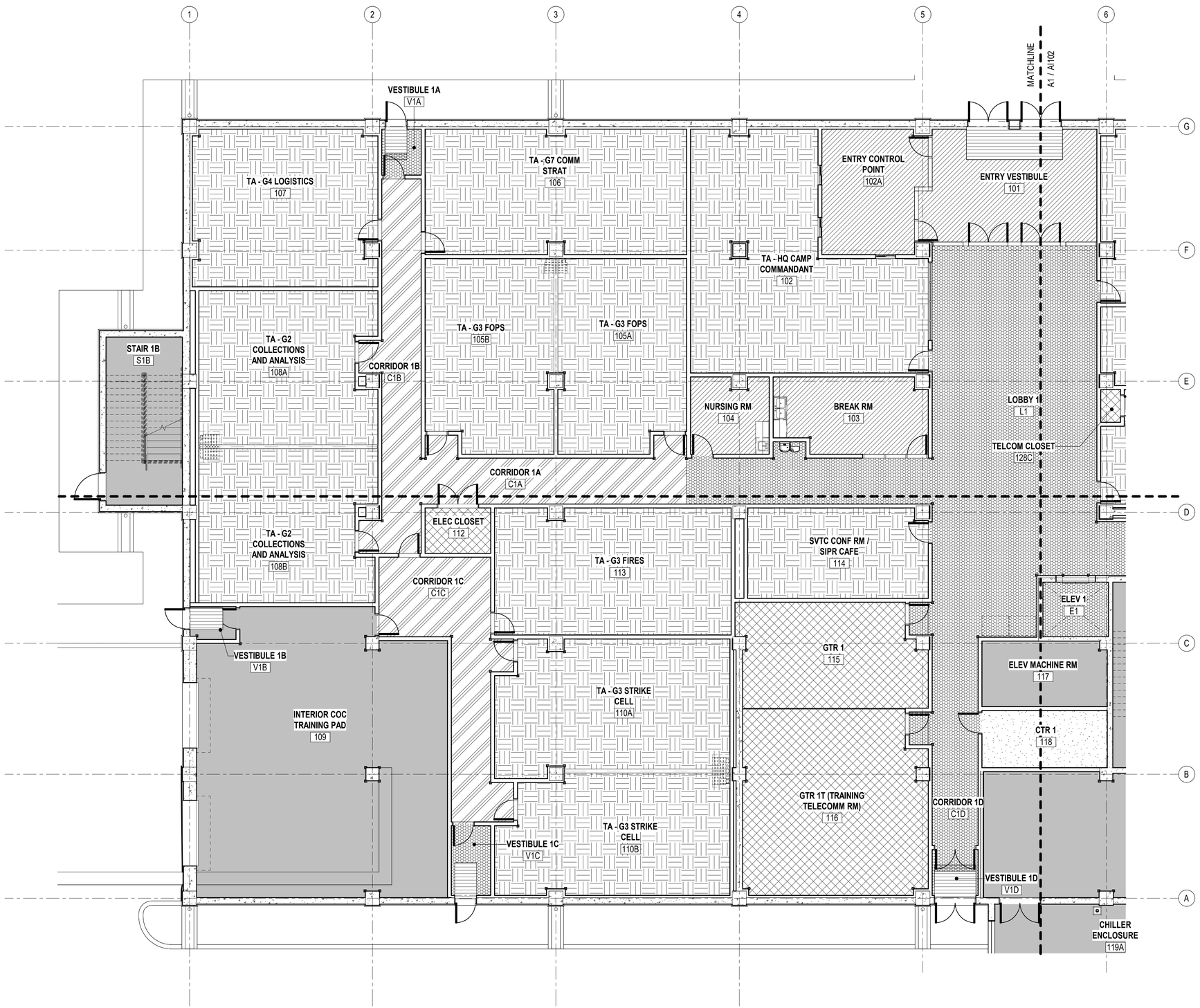

A1 ENLARGED FLOOR FINISH PLAN - 1A

SCALE: 1/8" = 1'-0"

GENERAL SHEET NOTES

1. REFER TO SHEET A-610 FOR COLOR MATERIAL SCHEDULE.
2. REFER TO SHEET A-612 AND A-613 FOR ROOM FINISH SCHEDULE.

FLOOR FINISH LEGEND

CON-1	SEALED CONCRETE
ESD-1	ELECTROSTATIC DISPLACEMENT FLOORING
PT-1	PORCELAIN TILE
PT-2	PORCELAIN TILE
PT-3	PORCELAIN TILE
RAF-1	RAISED ACCESS FLOORING - PT
RAF-2	RAISED ACCESS FLOORING - CPT
RAF-3	RAISED ACCESS FLOORING - ESD
WM-1	WALK-OFF MAT

KEY PLAN

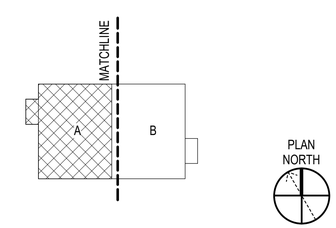

GRAPHIC SCALE(S)

1/8" = 1' - 0" 0 5' 10' 15' 30'

SYM	DESCRIPTION	DATE	APPR

NAVFAC

MYLES M. MICHIBATA LICENSED PROFESSIONAL ARCHITECT No. 12367 HAWAII, U.S.A.
LIC. EXP 04/30/26

ASMD LLC.
A/E INFO

APPROVED
FOR COMMANDER NAVFAC
ACTIVITY
NATHANIEL PYRON, MILCON PLANNER, DPPH
SATISFACTORY TO DATE 3/10/2026
DES AA DRW AA CHK JG
PM/DM DKS/DMK
BRANCH MANAGER KYM
CHIEF ENG/ARCH KYM
FIRE PROTECTION RYO

NAVAL FACILITIES ENGINEERING SYSTEMS COMMAND
DEPARTMENT OF THE NAVY
NAVAL FACILITIES ENGINEERING SYSTEMS COMMAND ~ PACIFIC
MAKALAPA, HAWAII
NAVFAC PACIFIC
U.S. NAVSUPPACT
MCB CAMP BLAZ, GUAM
JFY 2022 PROJECT J-875
BATTLE STAFF TRAINING FACILITY
ENLARGED FLOOR FINISH PLAN - 1A

SCALE: AS NOTED
EPROJECT NO.: 1696746
CONSTR. CONTR. NO.
NAVFAC DRAWING NO. 17321979
SHEET 183 OF 468
AI101

DRAWFORM REVISION: 25 AUGUST 2020

A1101
3/12/2026 9:13:14 PM
C:\Users\tbeamon\Documents\BLDG-875-1696746-A_rbaintonsnFdLVN.rvt

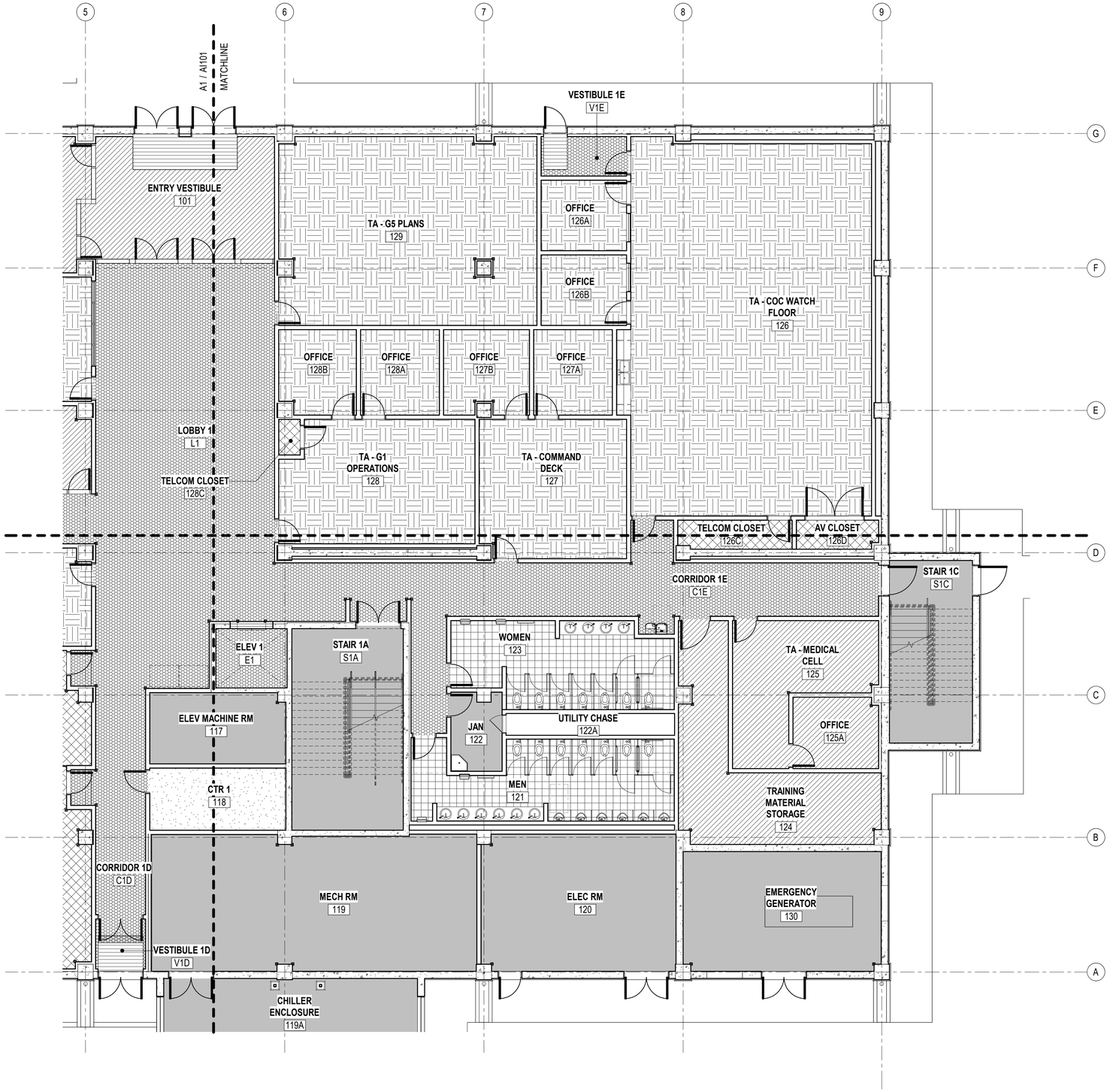

A1 ENLARGED FLOOR FINISH PLAN - 1B

SCALE: 1/8" = 1'-0"

GENERAL SHEET NOTES

1. REFER TO SHEET A-610 FOR COLOR MATERIAL SCHEDULE.
2. REFER TO SHEET A-612 AND A-613 FOR ROOM FINISH SCHEDULE.

FLOOR FINISH LEGEND

CON-1	SEALED CONCRETE
ESD-1	ELECTROSTATIC DISPLACEMENT FLOORING
PT-1	PORCELAIN TILE
PT-2	PORCELAIN TILE
PT-3	PORCELAIN TILE
RAF-1	RAISED ACCESS FLOORING - PT
RAF-2	RAISED ACCESS FLOORING - CPT
RAF-3	RAISED ACCESS FLOORING - ESD
WM-1	WALK-OFF MAT

KEY PLAN

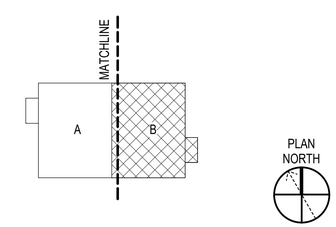

GRAPHIC SCALE(S)

1/8" = 1' - 0" 0 5' 10' 15' 30'

SYM	DESCRIPTION	DATE	APPR

NAVFAC

MYLES M. MICHIBATA LICENSED PROFESSIONAL ARCHITECT No. 12367 HAWAII, U.S.A.
LIC. EXP 04/30/26 SEAL

ASMD LLC. A/E INFO

APPROVED
FOR COMMANDER NAVFAC
ACTIVITY
NATHANIEL PYRON, MILCON PLANNER, DPPH
SATISFACTORY TO DATE 3/10/2026

DES	AA	DRW AA	CHK JG
PM/DM	DKS/DMK		
BRANCH MANAGER	KYM		
CHIEF ENG/ARCH	KYM		
FIRE PROTECTION	RYO		

DEPARTMENT OF THE NAVY
NAVFAC PACIFIC
NAVAL FACILITIES ENGINEERING SYSTEMS COMMAND ~ PACIFIC
NAVAL FACILITIES ENGINEERING SYSTEMS COMMAND
MAKALAPA, HAWAII
U.S. NAVSUPPACT
MCB CAMP BLAZ, GUAM
JFY 2022 PROJECT J-875
BATTLE STAFF TRAINING FACILITY
ENLARGED FLOOR FINISH PLAN - 1B

SCALE: AS NOTED
EPROJECT NO.: 1696746
CONSTR. CONTR. NO.
NAVFAC DRAWING NO. 17321980
SHEET 184 OF 468
AI102

DRAWFORM REVISION: 25 AUGUST 2020

3/12/2026 9:13:16 PM AI102
C:\Users\rtBaintona\Documents\BLDG-875-1696746-A_rtbaintonaF4LVN.rvt

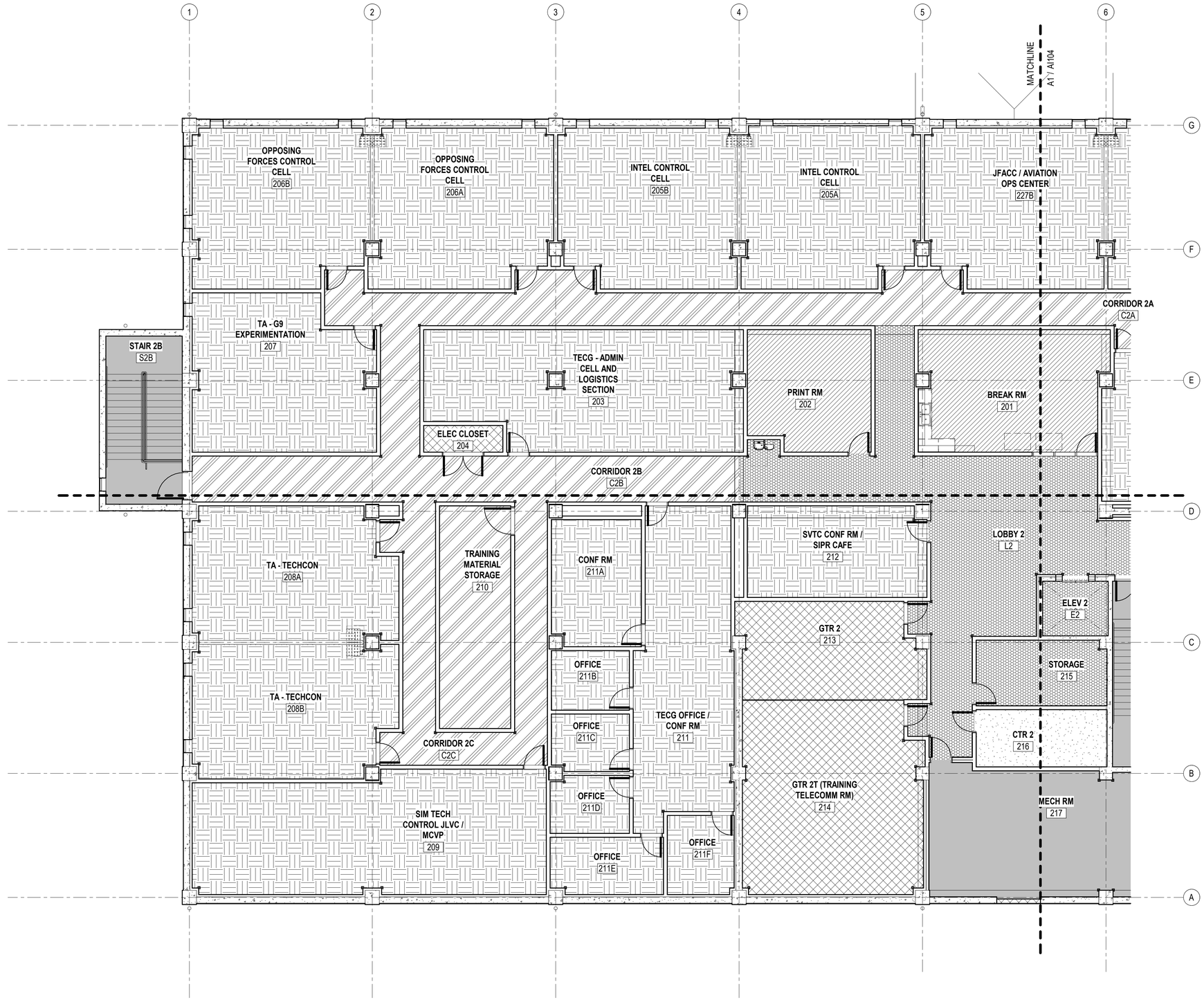

A1 ENLARGED FLOOR FINISH PLAN - 2A

SCALE: 1/8" = 1'-0"

GENERAL SHEET NOTES

1. REFER TO SHEET A-610 FOR COLOR MATERIAL SCHEDULE.
2. REFER TO SHEET A-612 AND A-613 FOR ROOM FINISH SCHEDULE.

FLOOR FINISH LEGEND

CON-1	SEALED CONCRETE
ESD-1	ELECTROSTATIC DISPLACEMENT FLOORING
PT-1	PORCELAIN TILE
PT-2	PORCELAIN TILE
PT-3	PORCELAIN TILE
RAF-1	RAISED ACCESS FLOORING - PT
RAF-2	RAISED ACCESS FLOORING - CPT
RAF-3	RAISED ACCESS FLOORING - ESD
WM-1	WALK-OFF MAT

KEY PLAN

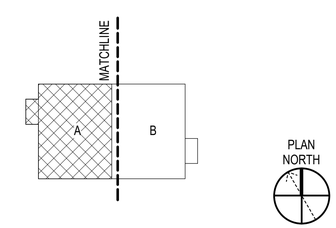

GRAPHIC SCALE(S)

1/8" = 1' - 0" 0 5' 10' 15' 30'

SYM	DESCRIPTION	DATE	APPR

NAVFAC

MYLES M. MICHIBATA LICENSED PROFESSIONAL ARCHITECT No. 12367 HAWAII, U.S.A.
LIC. EXP 04/30/26

ASMD LLC. A/E INFO

APPROVED
FOR COMMANDER NAVFAC

ACTIVITY
NATHANIEL PYRON, MILCON PLANNER, DPPH
SATISFACTORY TO DATE 3/10/2026

DES	AA	DRW AA	CHK JG
PMDM	DKS/DMK		
BRANCH MANAGER	KYM		
CHIEF ENG/ARCH	KYM		
FIRE PROTECTION	RYO		

NAVAL FACILITIES ENGINEERING SYSTEMS COMMAND
MAKALAPA, HAWAII
DEPARTMENT OF THE NAVY
NAVAL FACILITIES ENGINEERING SYSTEMS COMMAND ~ PACIFIC
NAVFAC PACIFIC

MCB CAMP BLAZ, GUAM
JFY 2022 PROJECT J-875
BATTLE STAFF TRAINING FACILITY
U.S. NAVSUPPACT

ENLARGED FLOOR FINISH PLAN - 2A

SCALE: AS NOTED
EPROJECT NO.: 1696746
CONSTR. CONTR. NO.
NAVFAC DRAWING NO. 17321981
SHEET 185 OF 468

AI103

DRAWFORM REVISION: 25 AUGUST 2020

3/12/2026 9:13:17 PM
C:\Users\tBaintona\Documents\BLDG-875-1696746-A_rbaitintonaF4LVNr.rvt
AI103

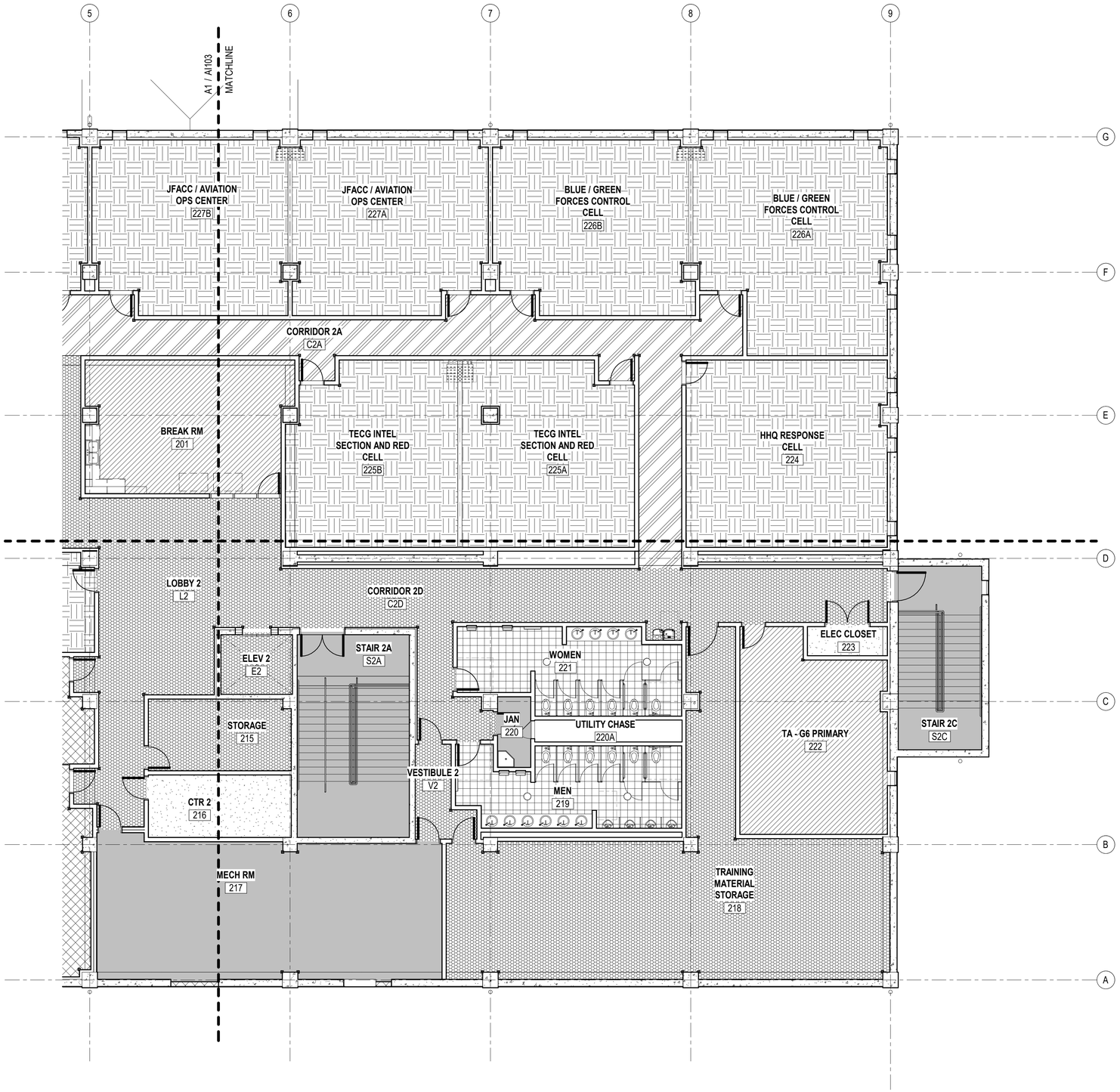

A1 ENLARGED FLOOR FINISH PLAN - 2B

SCALE: 1/8" = 1'-0"

GENERAL SHEET NOTES

1. REFER TO SHEET A-610 FOR COLOR MATERIAL SCHEDULE.
2. REFER TO SHEET A-612 AND A-613 FOR ROOM FINISH SCHEDULE.

FLOOR FINISH LEGEND

CON-1	SEALED CONCRETE
ESD-1	ELECTROSTATIC DISPLACEMENT FLOORING
PT-1	PORCELAIN TILE
PT-2	PORCELAIN TILE
PT-3	PORCELAIN TILE
RAF-1	RAISED ACCESS FLOORING - PT
RAF-2	RAISED ACCESS FLOORING - CPT
RAF-3	RAISED ACCESS FLOORING - ESD
WM-1	WALK-OFF MAT

KEY PLAN

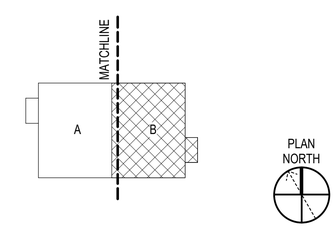

GRAPHIC SCALE(S)

1/8" = 1' - 0" 0 5' 10' 15' 30'

SYM	DESCRIPTION	DATE	APPR

NAVFAC

MYLES M. MICHIBATA LICENSED PROFESSIONAL ARCHITECT No. 12367 HAWAII, U.S.A.
LIC. EXP 04/30/26

ASMD LLC. A/E INFO

APPROVED
FOR COMMANDER NAVFAC
ACTIVITY
NATHANIEL PYRON, MILCON PLANNER, DPPH
SATISFACTORY TO DATE 3/10/2026

DES	AA	DRW AA	CHK JG
PM/DM	DKS/DMK		
BRANCH MANAGER	KYM		
CHIEF ENG/ARCH	KYM		
FIRE PROTECTION	RYO		

DEPARTMENT OF THE NAVY
NAVAL FACILITIES ENGINEERING SYSTEMS COMMAND
NAVFAC PACIFIC
U.S. NAVSUPPACT

NAVAL FACILITIES ENGINEERING SYSTEMS COMMAND ~ PACIFIC
MAKALAPA, HAWAII
MCB CAMP BLAZ, GUAM

JFY 2022 PROJECT J-875
BATTLE STAFF TRAINING FACILITY

ENLARGED FLOOR FINISH PLAN - 2B

SCALE: AS NOTED
EPROJECT NO.: 1696746
CONSTR. CONTR. NO.
NAVFAC DRAWING NO. 17321982
SHEET 186 OF 468

AI104

DRAWFORM REVISION: 25 AUGUST 2020

3/1/2026/9:13:18 PM AI104
C:\Users\rtBaintona\Documents\BLDG_875-1696746-A_rbaintonaF4LVN.rvt

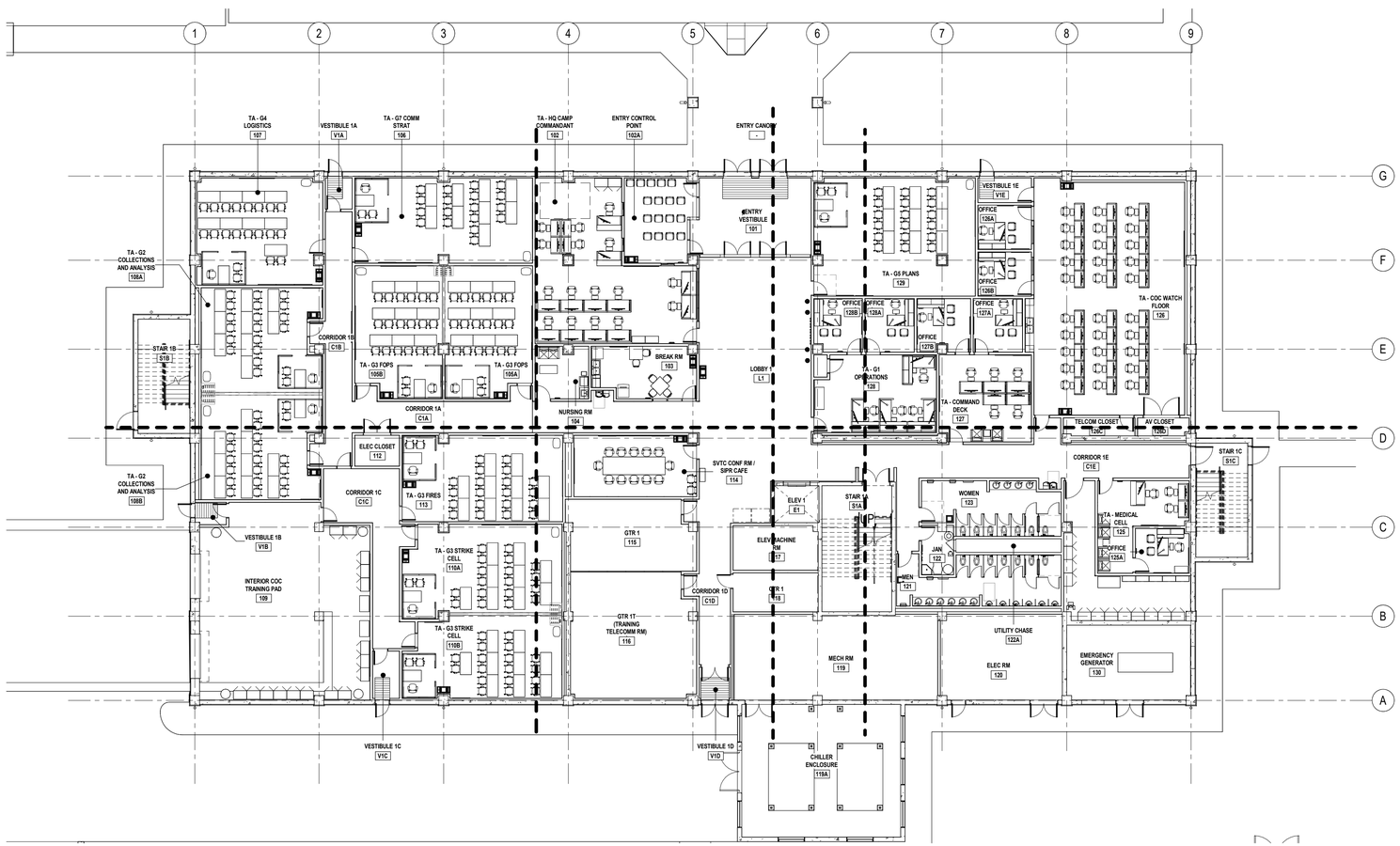

1 OVERALL FIRST FLOOR FF&E PLAN

SCALE: 1/16" = 1'-0"

GENERAL SHEET NOTES

SYM	DESCRIPTION	DATE	APPR

NAVFAC

MYLES M. MICHIBATA
LICENSED PROFESSIONAL ARCHITECT
No. 12367
HAWAII, U.S.A.
LIC. EXP 04/30/26

ASMD LLC.
A/E INFO

APPROVED
FOR COMMANDER NAVFAC

ACTIVITY
NATHANIEL PYRON, MILCON PLANNER, DPPH

SATISFACTORY TO DATE 3/10/2026

DES	AA	DRW AA/BK	CHK JG
PM/DM	DKS/DMK		
BRANCH MANAGER	KYM		
CHIEF ENG/ARCH	KYM		
FIRE PROTECTION	RYO		

DEPARTMENT OF THE NAVY
NAVFAC PACIFIC
NAVAL FACILITIES ENGINEERING SYSTEMS COMMAND ~ PACIFIC
NAVAL FACILITIES ENGINEERING SYSTEMS COMMAND
MAKALAPA, HAWAII
U.S. NAVSUPPACT
MCB CAMP BLAZ, GUAM
JFY 2022 PROJECT J-875
BATTLE STAFF TRAINING FACILITY
OVERALL FIRST FLOOR FF&E PLAN

SCALE: AS NOTED
EPROJECT NO.: 1696746
CONSTR. CONTR. NO.
NAVFAC DRAWING NO. 17321997
SHEET 187 OF 468
I-801

DRAWFORM REVISION: 25 AUGUST 2020

KEY PLAN

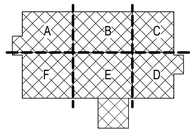

PLAN NORTH

GRAPHIC SCALE(S)

1/16" = 1' - 0" 0 5' 10' 20' 30' 60'

3/12/2026 9:06:23 PM I-801
C:\Users\mbatlantona\Documents\BLDG-J875-1696746-A_mbatlantonaF4LVN.rvt

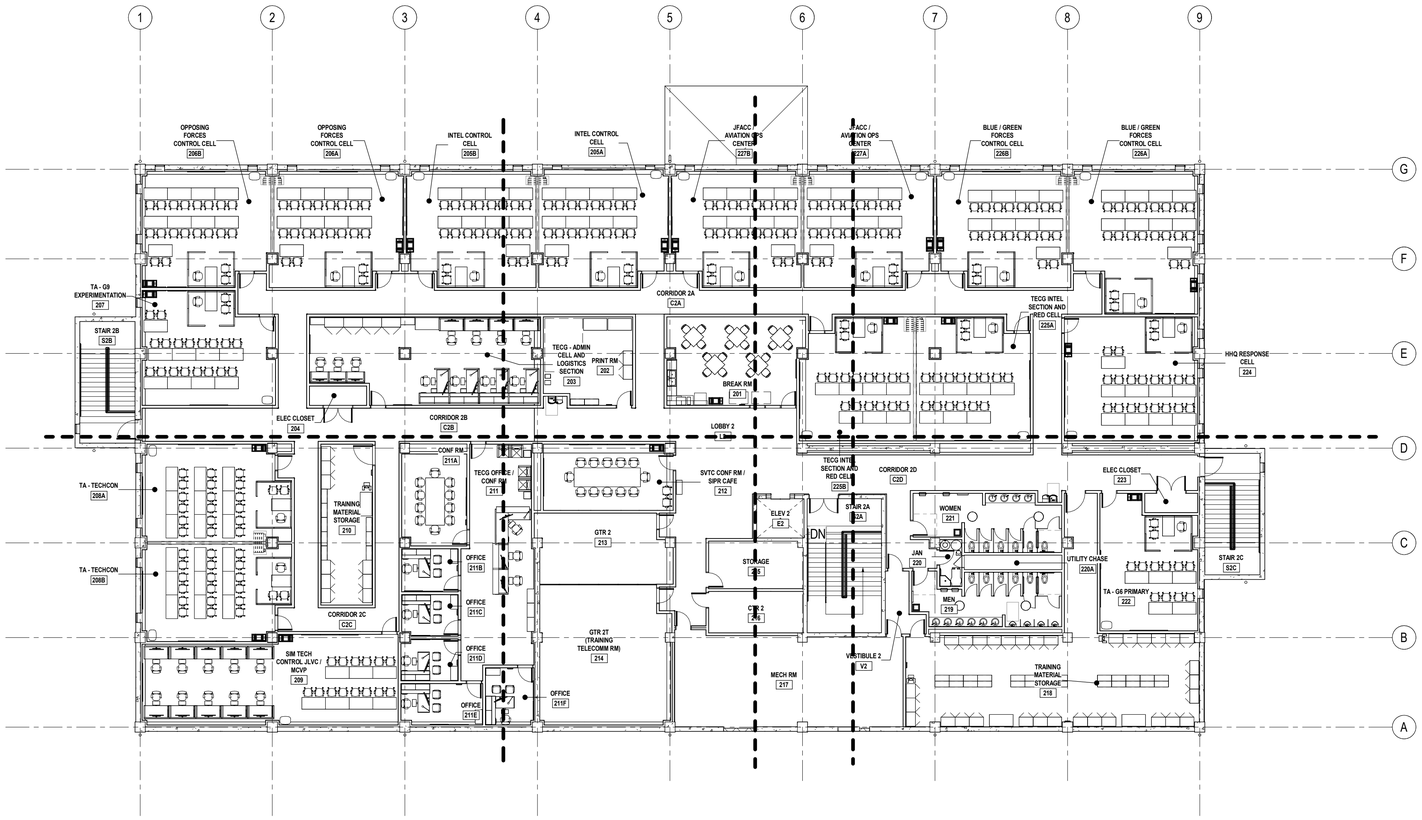

1 OVERALL SECOND FLOOR FF&E PLAN

SCALE: 1/16" = 1'-0"

GENERAL SHEET NOTES

SYM	DESCRIPTION	DATE	APPR

NAVFAC

MYLES M. MICHIBATA
LICENSED PROFESSIONAL ARCHITECT
No. 12367
HAWAII, U.S.A.
LIC. EXP 04/30/26 BY:

ASMD LLC.
A/E INFO

APPROVED
Evan Miyazaki
FOR COMMANDER NAVFAC

ACTIVITY
NATHANIEL PYRON, MILCON PLANNER, DPPH

SATISFACTORY TO DATE	3/10/2026		
DES	AA	DRW AA/BK	CHK JG
PMDM	DKS/DMK		
BRANCH MANAGER	KYM		
CHIEF ENG/ARCH	KYM		
FIRE PROTECTION	RYO		

DEPARTMENT OF THE NAVY
NAVAL FACILITIES ENGINEERING SYSTEMS COMMAND
NAVFAC PACIFIC

NAVAL FACILITIES ENGINEERING SYSTEMS COMMAND ~ PACIFIC
MAKALAPA, HAWAII

U.S. NAVSUPPACT
MCB CAMP BLAZ, GUAM

JFY 2022 PROJECT J-875
BATTLE STAFF TRAINING FACILITY

OVERALL SECOND FLOOR FF&E PLAN

SCALE: AS NOTED
EPROJECT NO.: 1696746
CONSTR. CONTR. NO.
NAVFAC DRAWING NO. 17321998
SHEET 188 OF 468
I-802

DRAWFORM REVISION: 25 AUGUST 2020

KEY PLAN

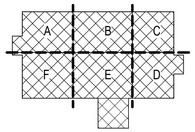

PLAN NORTH

GRAPHIC SCALE(S)

1/16" = 1' - 0" 0 5' 10' 20' 30' 60'

3/12/2026 9:06:25 PM
C:\Users\rfbellmona\Documents\BLDG-875-1696746-A_rbollinfonsFALVN.rvt
I-802

FF&E SCHEDULE

CODE	DESCRIPTION	CAT
A-1	ARTWORK, WALL-MOUNTED	A2
A-2	ARTWORK, WALL-MOUNTED	A2
A-3	ARTWORK, CHAIN OF COMMAND	A2
AC-1	BULLETIN BOARD, 48" X 36"	A2
AC-3	BULLETIN BOARD, ENCLOSED, 48" X 36"	A2
AC-4	CLOCK, ANALOG, WALL-MOUNTED	A2
AC-5	CLOCK, DIGITAL, 5 TIMEZONES, WALL-MOUNTED	A2
AC-6	CLOCK, DIGITAL, TRAINING, WALL-MOUNTED	A2
AC-7	FLAG STAND	A2
AC-8A	RECEPTACLE, RECYCLE, 20GAL	A2
AC-8B	RECEPTACLE, PAPER OPENING, 20GAL	A2
AC-9	RECEPTACLE, WASTE, INDUSTRIAL, W/ CASTERS & LID	A2
AC-10	RECEPTACLE, WASTE, 40GAL	A2
AC-11	RECEPTACLE, WASTE, SMALL	A2
AC-12	WHITEBOARD, GLASS, MAGNETIC, 48" X 36"	A2
AC-13	LECTERN, CLASSROOM, MOBILE	A2
C-1	CHAIR, CONFERENCE	A2
C-3	CHAIR, DINING	A2
C-4	CHAIR, GUEST, W/ ARMS	A2
C-5	CHAIR, LOUNGE	A2
C-6	CHAIR, LOVESEAT	A2
C-7	CHAIR, TASK, INSTRUCTOR	A2
C-8	CHAIR, TASK, CLASSROOM	A2
C-9	CHAIR, TASK, OPEN OFFICE	A2
C-10	CHAIR, TASK, PRIVATE OFFICE	A2
C-12	CHAIR, TRAINING, W/ ARMS	A2
E-1	HAND CART	A2
E-2	CART, JANITOR	A2
E-3	COFFEE MAKER	A2
E-4	ICE MAKER	A2
E-5	FLOOR BUFFER, 20"	A2
E-6	MICROWAVE, COUNTERTOP	A2
E-7	REFRIGERATOR, W/ FREEZER, ADA	A2
E-8	REFRIGERATOR, W/ FREEZER, UNDERCOUNTER	A2
E-9	SHREDDER, CROSS CUT	A2
E-10	VACUUM, 12"	A2
E-11	WET & DRY MOP	A2
ST-1	STORAGE, LOCKER, CELLPHONE	A2
ST-3	STORAGE, CABINET	A2
ST-4	STORAGE, LATERAL FILE, 4-DRAWER	A2
ST-5	STORAGE, OPEN SHELVING	A2
ST-6	STORAGE, TOOLS, WITH CASTERS	A2
T-1	TABLE, COFFEE	A2
T-2	TABLE, CONFERENCE, 120"W X 48"D	A2
T-4	TABLE, CONFERENCE, 168"W x 48"D	A2
T-5	TABLE, DINING, 36" X 36"	A2
T-6	TABLE, SIDE, 18"X 18"	A2
T-7	TABLE, TRAINING, W/O POWER, W/ CASTERS, 60" X 24"	A2
T-8	TABLE, TRAINING, FLIP-TOP, W/ POWER, W/ CASTERS, 60" X 30"	A2
T-10	TABLE, TRAINING, FLIP-TOP, W/O POWER, W/ CASTERS, 60" X 30"	A2
WS-1	WORKSTATION, PANEL, L-SHAPED, 72" X 84"	A2
WS-2	WORKSTATION, PANEL, L-SHAPED, 84" X 114"	A2
WS-3	WORKSTATION, PANEL, STRAIGHT, 42" X 24"	A2
WS-4	WORKSTATION, PANEL, STRAIGHT, 60" X 30"	A2
WS-5	WORKSTATION, PANEL, STRAIGHT, W/ TRANSACTION TOP, 60" X 30"	A2
WS-6	WORKSTATION, FREESTANDING, L-SHAPED, 72" X 72"	A2
WS-7	WORKSTATION, PANEL, L-SHAPED, W/ TRANSACTION TOP, 84" X 84"	A2

GENERAL SHEET NOTES

1. REFER TO THE SEPARATE AUDIO-VISUAL (AV) PACKAGE FOR ALL ITS SYSTEM COMPONENTS.

CAT CODE LEGEND

CODE	DESCRIPTION
A1	CONTRACTOR FURNISHED, CONTRACTOR INSTALLED
A2	CONTRACTOR FURNISHED, CONTRACTOR INSTALLED BY CONTRACT MODIFICATION
B	GOVERNMENT FURNISHED, GOVERNMENT INSTALLED
C	RENT / LEASE BY GOVERNMENT

1/4" = 1' - 0" 0 1' 5' 10' 15'

SYM	DESCRIPTION	DATE	APPR

MYLES M. MICHIBATA LICENSED PROFESSIONAL ARCHITECT No. 12367 HAWAII, U.S.A.
LIC. EXP 04/30/26 SEAL

AE INFO

APPROVED
Evan Minzel
FOR COMMANDER NAVFAC
ACTIVITY
NATHANIEL PYRON, MILCON PLANNER, DPPH
SATISFACTORY TO DATE 3/10/2026

DES	AA	DRW AA/BK	CHK JG
PMDM	DKS/DMK		
BRANCH MANAGER	KYM		
CHIEF ENG/ARCH	KYM		
FIRE PROTECTION	RYO		

DEPARTMENT OF THE NAVY
NAVAL FACILITIES ENGINEERING SYSTEMS COMMAND
NAVFAC PACIFIC
U.S. NAVSUPPACT
NAVAL FACILITIES ENGINEERING SYSTEMS COMMAND ~ PACIFIC
MAKALAPA, HAWAII
MCB CAMP BLAZ, GUAM
JFY 2022 PROJECT J-875
BATTLE STAFF TRAINING FACILITY
FF&E SCHEDULE

SCALE: AS NOTED
EPROJECT NO.: 1696746
CONSTR. CONTR. NO.
NAVFAC DRAWING NO. 17321999
SHEET 189 OF 468
I-803

DRAWFORM REVISION: 25 AUGUST 2020

3/12/2026 9:06:26 PM I-803
C:\Users\bitaintona\Documents\BLDG-875-1696746-A_bbaintonaFAILVN.rvt

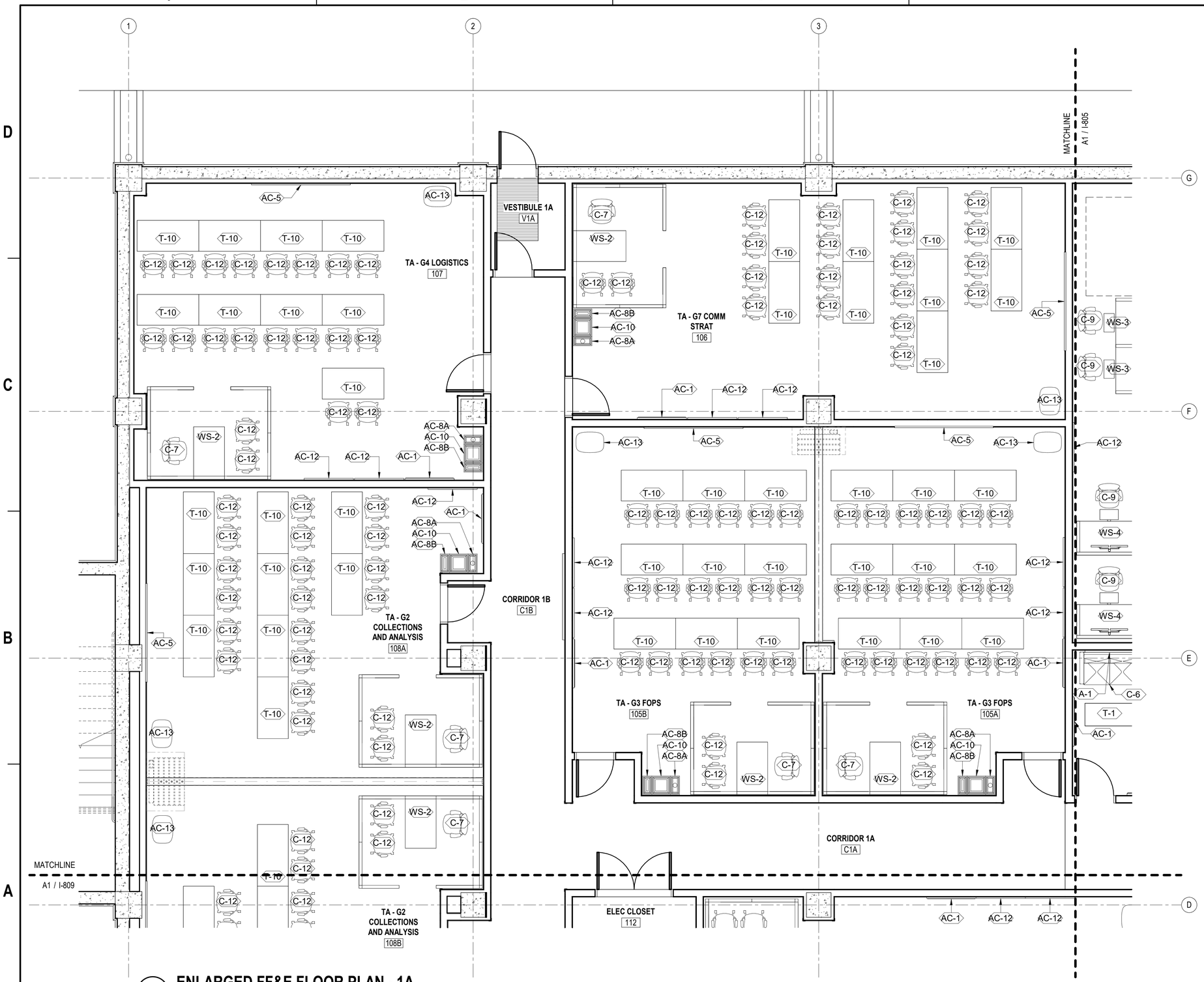

A1 ENLARGED FF&E FLOOR PLAN - 1A

SCALE: 1/4" = 1'-0"

GENERAL SHEET NOTES

1. REFER TO SHEET I-803 FOR FF&E SCHEDULE.
2. REFER TO THE SEPARATE AUDIO-VISUAL (AV) PACKAGE FOR ALL ITS SYSTEM COMPONENTS.

KEY PLAN

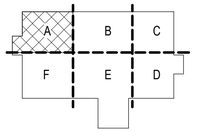

PLAN NORTH

GRAPHIC SCALE(S)

1/4" = 1' - 0" 0 1' 5' 10' 15'

SYM	DESCRIPTION	DATE	APPR

NAVFAC

MYLES M. MICHIBATA — LICENSED PROFESSIONAL ARCHITECT — No. 12367 — HAWAII, U.S.A.
LIC. EXP 04/30/26

ASMD LLC.

APPROVED
FOR COMMANDER NAVFAC

ACTIVITY
NATHANIEL PYRON, MILCON PLANNER, DPPH
SATISFACTORY TO DATE 3/10/2026
DES AA DRW AA/BK CHK JG
PMDM DKS/DMK
BRANCH MANAGER KYM
CHIEF ENG/ARCH KYM
FIRE PROTECTION RYO

DEPARTMENT OF THE NAVY
NAVFAC PACIFIC
NAVAL FACILITIES ENGINEERING SYSTEMS COMMAND ~ PACIFIC
NAVAL FACILITIES ENGINEERING SYSTEMS COMMAND
MAKALAPA, HAWAII
U.S. NAVSUPPACT
MCB CAMP BLAZ, GUAM
JFY 2022 PROJECT J-875
BATTLE STAFF TRAINING FACILITY
ENLARGED FF&E FLOOR PLAN - 1A

SCALE: AS NOTED
EPROJECT NO.: 1696746
CONSTR. CONTR. NO.
NAVFAC DRAWING NO. 17322000
SHEET 190 OF 468
I-804

DRAWFORM REVISION: 25 AUGUST 2020

3/12/2020 9:06:28 PM I-804
C:\Users\ritlamtona\Documents\BLDG-875-1696746-A_rtablintonaFF&LVN.rvt

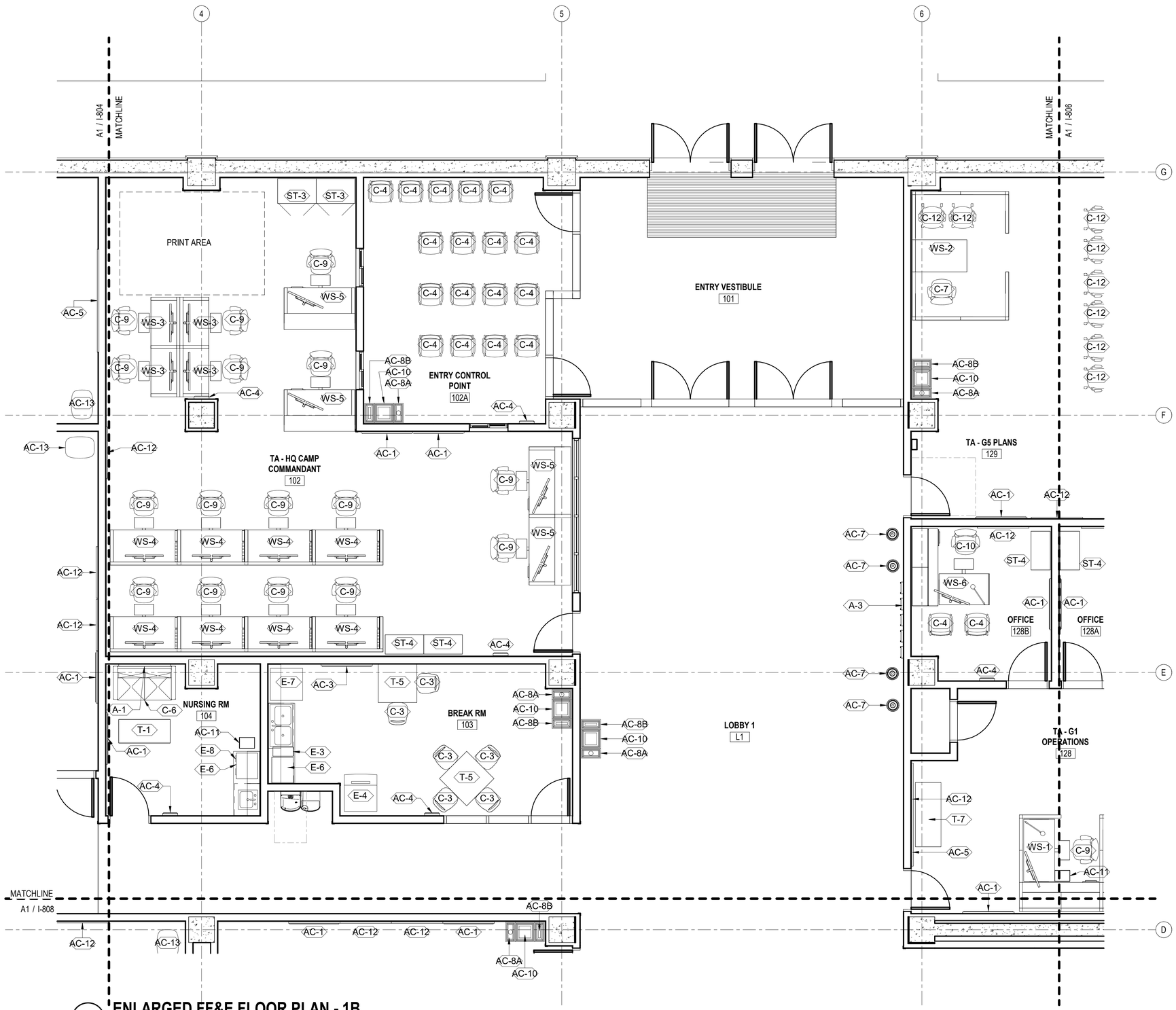

A1 ENLARGED FF&E FLOOR PLAN - 1B

SCALE: 1/4" = 1'-0"

GENERAL SHEET NOTES

1. REFER TO SHEET I-803 FOR FF&E SCHEDULE.
2. REFER TO THE SEPARATE AUDIO-VISUAL (AV) PACKAGE FOR ALL ITS SYSTEM COMPONENTS.

SYM	DESCRIPTION	DATE	APPR

NAVFAC

MYLES M. MICHIBATA — LICENSED PROFESSIONAL ARCHITECT — No. 12367 — HAWAII, U.S.A.
LIC. EXP 04/30/26

ASMD LLC.
A/E INFO

APPROVED
Evan Miyazaki
FOR COMMANDER NAVFAC

ACTIVITY
NATHANIEL PYRON, MILCON PLANNER, DPPH

SATISFACTORY TO DATE	3/10/2026		
DES	AA	DRW AA/BK	CHK JG
PM/DM	DKS/DMK		
BRANCH MANAGER	KYM		
CHIEF ENG/ARCH	KYM		
FIRE PROTECTION	RYO		

DEPARTMENT OF THE NAVY
NAVAL FACILITIES ENGINEERING SYSTEMS COMMAND
NAVFAC PACIFIC
U.S. NAVSUPPACT
NAVAL FACILITIES ENGINEERING SYSTEMS COMMAND ~ PACIFIC
MAKALAPA, HAWAII
MCB CAMP BLAZ, GUAM

JFY 2022 PROJECT J-875
BATTLE STAFF TRAINING FACILITY

ENLARGED FF&E FLOOR PLAN - 1B

SCALE: AS NOTED
EPROJECT NO.: 1696746
CONSTR. CONTR. NO.
NAVFAC DRAWING NO. 17322001
SHEET 191 OF 468

I-805

DRAWFORM REVISION: 25 AUGUST 2020

KEY PLAN

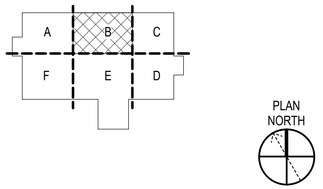

GRAPHIC SCALE(S)

1/4" = 1' - 0" 0 1' 5' 10' 15'

3/12/2026 9:06:29 PM
C:\Users\tbattersna\Documents\BLDG-875-1696746-A_tbattersnaFALVN.rvt
I-805

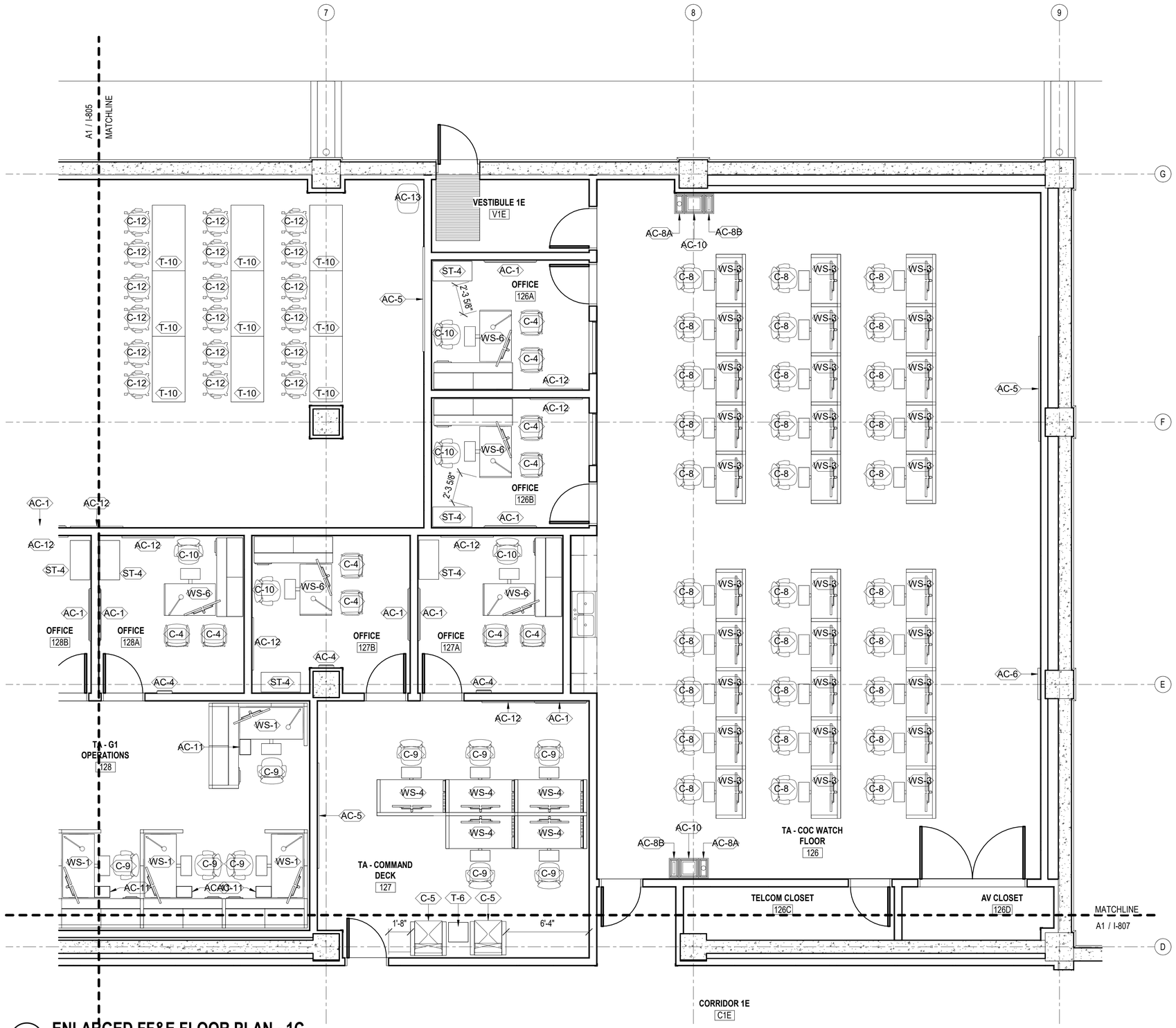

A1 ENLARGED FF&E FLOOR PLAN - 1C

SCALE: 1/4" = 1'-0"

GENERAL SHEET NOTES

1. REFER TO SHEET I-803 FOR FF&E SCHEDULE.
2. REFER TO THE SEPARATE AUDIO-VISUAL (AV) PACKAGE FOR ALL ITS SYSTEM COMPONENTS.

KEY PLAN

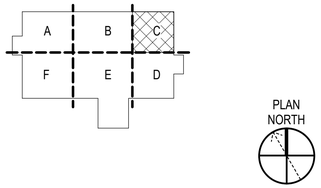

GRAPHIC SCALE(S)

1/4" = 1' - 0" 0 1' 5' 10' 15'

SYM	DESCRIPTION	DATE	APPR

NAVFAC

MYLES M. MICHIBATA LICENSED PROFESSIONAL ARCHITECT No. 12367 HAWAII, U.S.A.
LIC. EXP 04/30/26 SEAL

ASMD LLC. A/E INFO

APPROVED
Evan Miyazaki
FOR COMMANDER NAVFAC

ACTIVITY
NATHANIEL PYRON, MILCON PLANNER, DPPH

SATISFACTORY TO DATE	3/10/2026
DES AA	DRW AA/BK CHK JG
PM/DM	DKS/DMK
BRANCH MANAGER	KYM
CHIEF ENG/ARCH	KYM
FIRE PROTECTION	RYO

DEPARTMENT OF THE NAVY
NAVAL FACILITIES ENGINEERING SYSTEMS COMMAND ~ PACIFIC
NAVFAC PACIFIC
U.S. NAVSUPPACT
NAVAL FACILITIES ENGINEERING SYSTEMS COMMAND
MAKALAPA, HAWAII
MCB CAMP BLAZ, GUAM
JFY 2022 PROJECT J-875
BATTLE STAFF TRAINING FACILITY
ENLARGED FF&E FLOOR PLAN - 1C

SCALE: AS NOTED
EPROJECT NO.: 1696746
CONSTR. CONTR. NO.
NAVFAC DRAWING NO. 17322002
SHEET 192 OF 468
I-806

DRAWFORM REVISION: 25 AUGUST 2020

3/12/2026 9:06:30 PM I-806
C:\Users\YrBaintona\Documents\BLDG-875-1696746-A_rbaintonaF4LVN.rvt

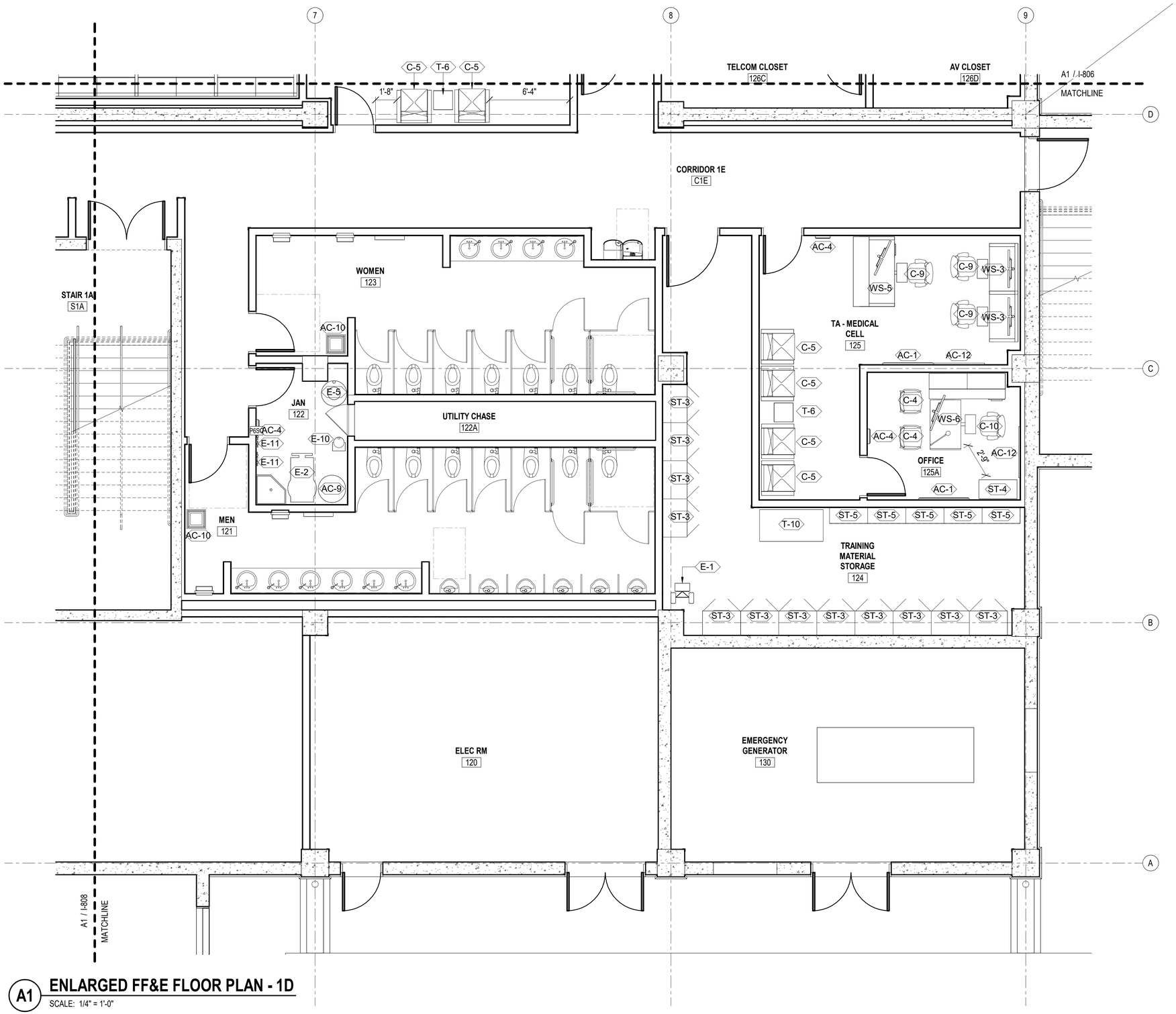

A1 ENLARGED FF&E FLOOR PLAN - 1D

SCALE: 1/4" = 1'-0"

GENERAL SHEET NOTES

1. REFER TO SHEET I-803 FOR FF&E SCHEDULE.
2. REFER TO THE SEPARATE AUDIO-VISUAL (AV) PACKAGE FOR ALL ITS SYSTEM COMPONENTS.

KEY PLAN

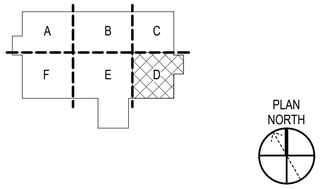

GRAPHIC SCALE(S)

1/4" = 1' - 0" 0 1' 5' 10' 15'

SYM	DESCRIPTION	DATE	APPR

NAVFAC

MYLES M. MICHIBATA LICENSED PROFESSIONAL ARCHITECT No. 12367 HAWAII, U.S.A.
LIC. EXP 04/30/26 SEAL

ASMD LLC. A/E INFO

APPROVED
FOR COMMANDER NAVFAC

ACTIVITY
NATHANIEL PYRON, MILCON PLANNER, DPPH
SATISFACTORY TO DATE 3/10/2026

DES	AA	DRW AA/BK	CHK JG
PMDM			DKS/DMK
BRANCH MANAGER			KYM
CHIEF ENG/ARCH			KYM
FIRE PROTECTION			RYO

DEPARTMENT OF THE NAVY
NAVAL FACILITIES ENGINEERING SYSTEMS COMMAND ~ PACIFIC
NAVFAC PACIFIC
U.S. NAVSUPPACT

NAVAL FACILITIES ENGINEERING SYSTEMS COMMAND
MAKALAPA, HAWAII

MCB CAMP BLAZ, GUAM

JFY 2022 PROJECT J-875
BATTLE STAFF TRAINING FACILITY

ENLARGED FF&E FLOOR PLAN - 1D

SCALE: AS NOTED
EPROJECT NO.: 1696746
CONSTR. CONTR. NO.
NAVFAC DRAWING NO. 17322003
SHEET 193 OF 468
I-807

DRAWFORM REVISION: 25 AUGUST 2020

3/12/2026 9:06:31 PM I-807
C:\Users\mitbatim\Documents\BLDG-J875-1696746-A_Dbalintonal-FALVN.rvt

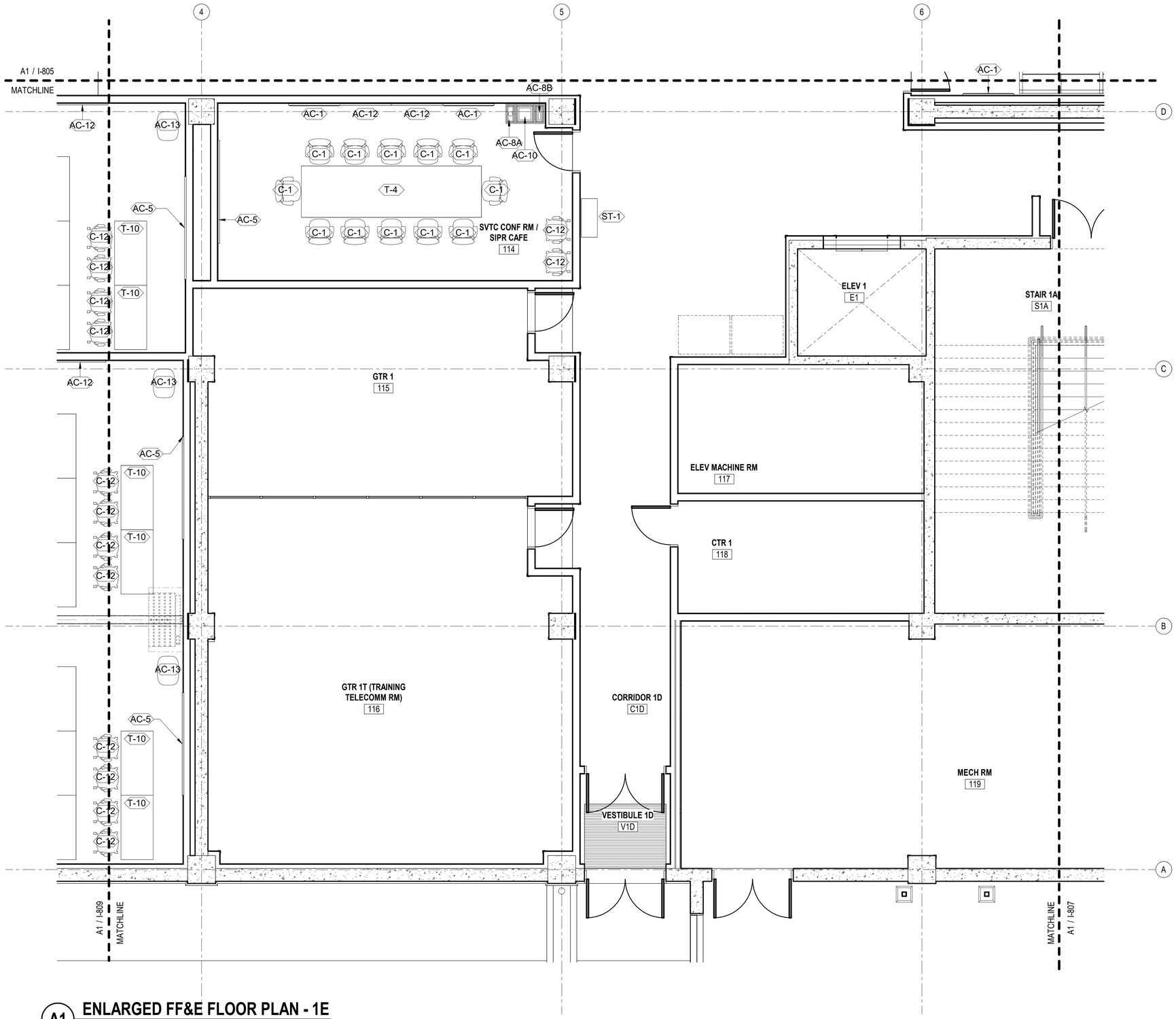

A1 ENLARGED FF&E FLOOR PLAN - 1E

SCALE: 1/4" = 1'-0"

GENERAL SHEET NOTES

1. REFER TO SHEET I-803 FOR FF&E SCHEDULE.
2. REFER TO THE SEPARATE AUDIO-VISUAL (AV) PACKAGE FOR ALL ITS SYSTEM COMPONENTS.

KEY PLAN

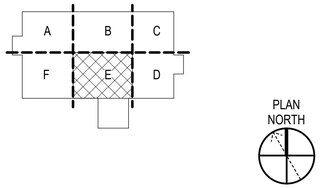

GRAPHIC SCALE(S)

1/4" = 1' - 0" 0 1' 5' 10' 15'

SYM	DESCRIPTION	DATE	APPR

NAVFAC

MYLES M. MICHIBATA LICENSED PROFESSIONAL ARCHITECT No. 12367 HAWAII, U.S.A.
LIC. EXP 04/30/26 SEAL

ASMD LLC. A/E INFO

APPROVED Evan Mizell
FOR COMMANDER NAVFAC

ACTIVITY: NATHANIEL PYRON, MILCON PLANNER, DPPH
SATISFACTORY TO DATE 3/10/2026
DES AA DRW AA/BK CHK JG
PM/DM DKS/DMK
BRANCH MANAGER KYM
CHIEF ENG/ARCH KYM
FIRE PROTECTION RYO

DEPARTMENT OF THE NAVY
NAVFAC PACIFIC
NAVAL FACILITIES ENGINEERING SYSTEMS COMMAND ~ PACIFIC
NAVAL FACILITIES ENGINEERING SYSTEMS COMMAND
MAKALAPA, HAWAII
U.S. NAVSUPPACT
MCB CAMP BLAZ, GUAM
JFY 2022 PROJECT J-875
BATTLE STAFF TRAINING FACILITY
ENLARGED FF&E FLOOR PLAN - 1E

SCALE: AS NOTED
EPROJECT NO.: 1696746
CONSTR. CONTR. NO.
NAVFAC DRAWING NO. 17322004
SHEET 194 OF 468

I-808

DRAWFORM REVISION: 25 AUGUST 2020

3/12/2026 9:06:32 PM I-808
C:\Users\RBaillinton\Documents\BLDG-875-1696746-A_RballintonsFF&LVN.rvt

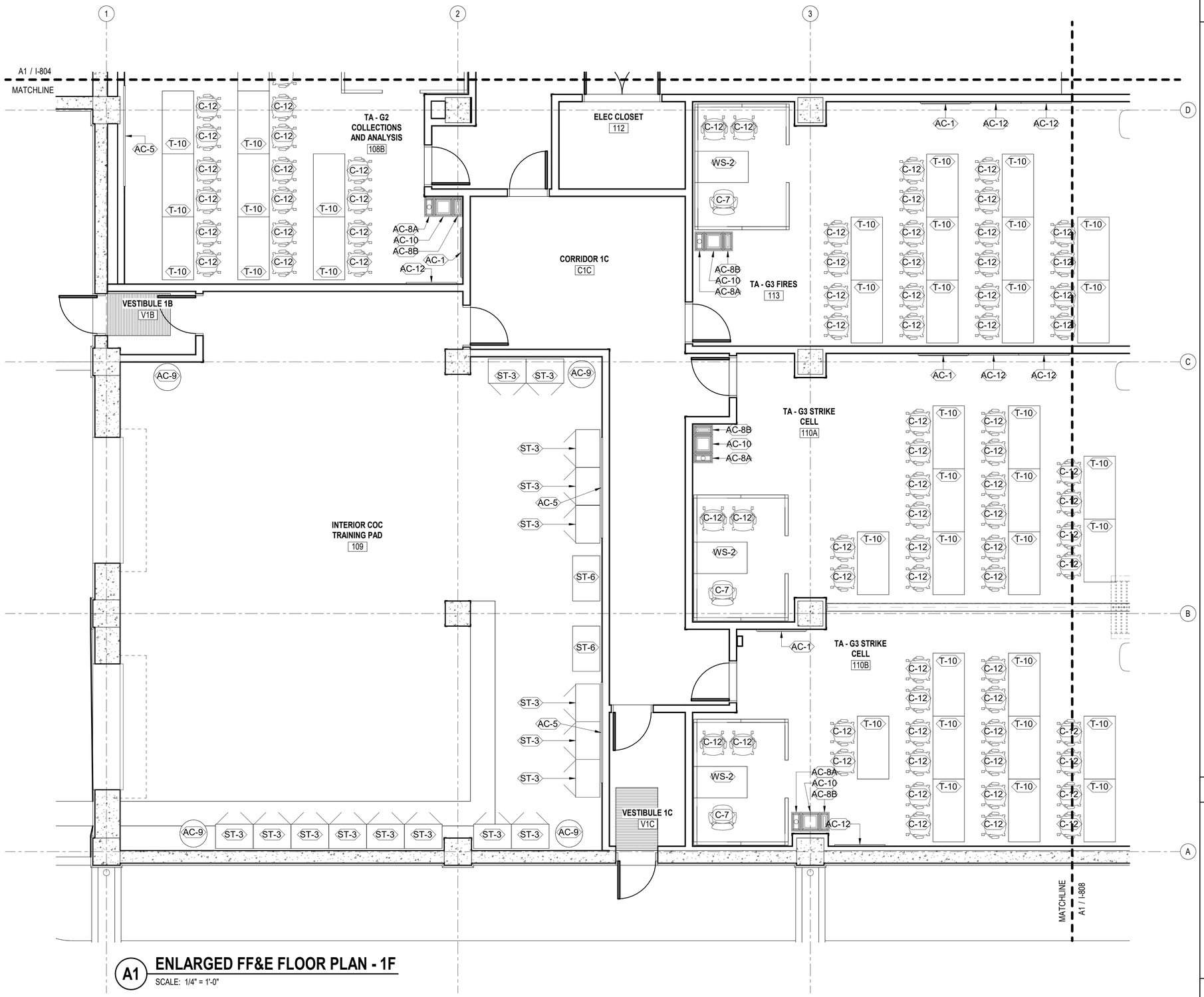

A1 ENLARGED FF&E FLOOR PLAN - 1F

SCALE: 1/4" = 1'-0"

GENERAL SHEET NOTES

1. REFER TO SHEET I-803 FOR FF&E SCHEDULE.
2. REFER TO THE SEPARATE AUDIO-VISUAL (AV) PACKAGE FOR ALL ITS SYSTEM COMPONENTS.

KEY PLAN

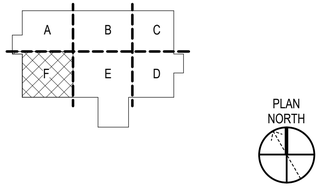

GRAPHIC SCALE(S)

1/4" = 1' - 0" 0 1' 5' 10' 15'

SYM	DESCRIPTION	DATE	APPR

NAVFAC

MYLES M. MICHIBATA — LICENSED PROFESSIONAL ARCHITECT No. 12367 — HAWAII, U.S.A.
LIC. EXP 04/30/26 SEAL

ASMD LLC. A/E INFO

APPROVED Evan Miyere
FOR COMMANDER NAVFAC

ACTIVITY: NATHANIEL PYRON, MILCON PLANNER, DPPH
SATISFACTORY TO DATE 3/10/2026
DES AA | DRW AA/BK | CHK JG
PMDM DKS/DMK
BRANCH MANAGER KYM
CHIEF ENG/ARCH KYM
FIRE PROTECTION RYO

DEPARTMENT OF THE NAVY
NAVFAC PACIFIC
U.S. NAVSUPPACT
NAVAL FACILITIES ENGINEERING SYSTEMS COMMAND ~ PACIFIC
NAVAL FACILITIES ENGINEERING SYSTEMS COMMAND
MAKALAPA, HAWAII
MCB CAMP BLAZ, GUAM
JFY 2022 PROJECT J-875
BATTLE STAFF TRAINING FACILITY
ENLARGED FF&E FLOOR PLAN - 1F

SCALE: AS NOTED
EPROJECT NO.: 1696746
CONSTR. CONTR. NO.
NAVFAC DRAWING NO. 17322005
SHEET 195 OF 468
I-809

DRAWFORM REVISION: 25 AUGUST 2020

3/12/2026 9:06:34 PM I-809
C:\Users\nbattlinor\Documents\BLDG-875-1696746-A_nbattlinorsaFALVN.rvt

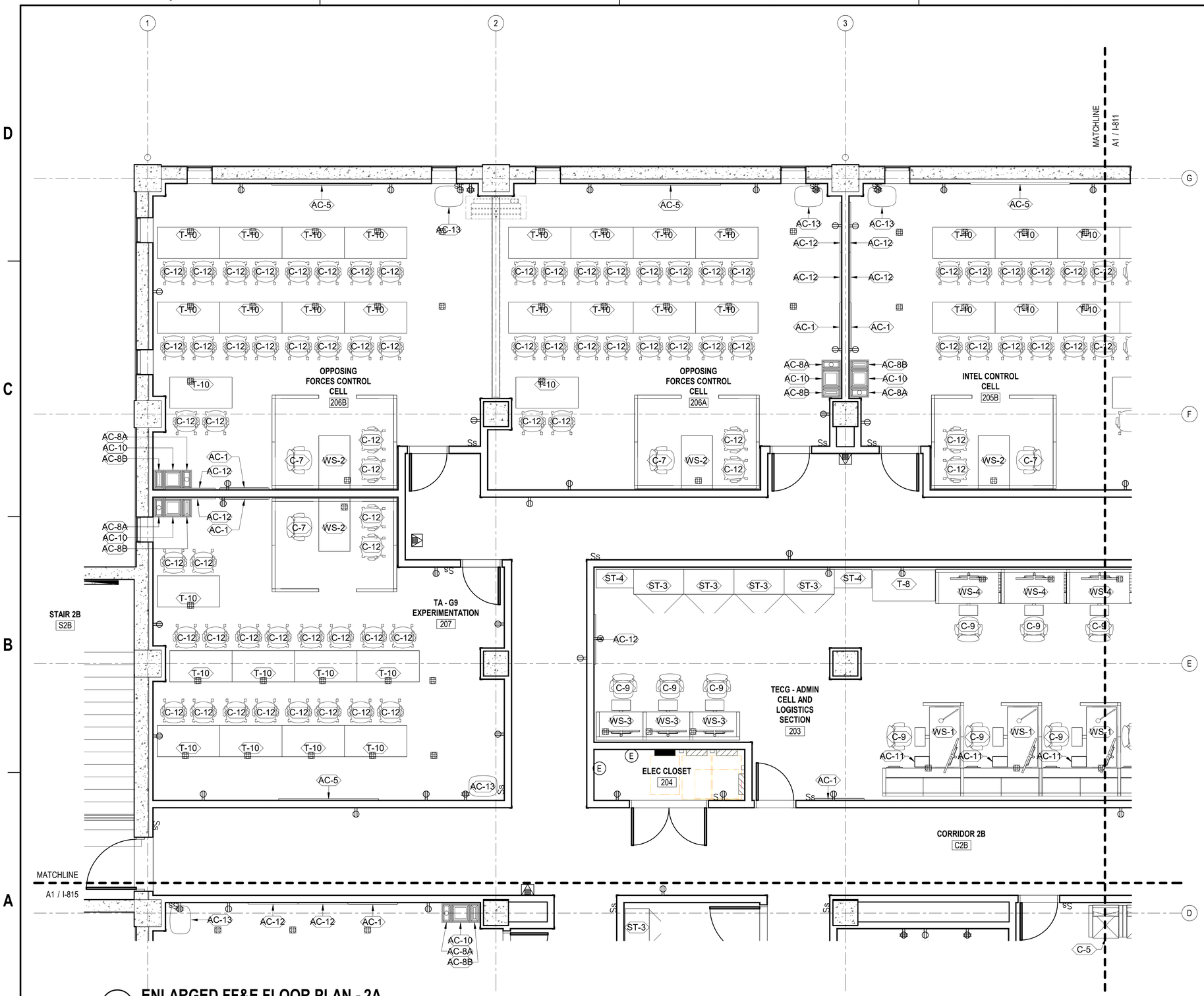

A1 ENLARGED FF&E FLOOR PLAN - 2A

SCALE: 1/4" = 1'-0"

GENERAL SHEET NOTES

1. REFER TO SHEET I-803 FOR FF&E SCHEDULE.
2. REFER TO THE SEPARATE AUDIO-VISUAL (AV) PACKAGE FOR ALL ITS SYSTEM COMPONENTS.

SYM	DESCRIPTION	DATE	APPR

NAVFAC

MYLES M. MICHIBATA LICENSED PROFESSIONAL ARCHITECT No. 12367 HAWAII, U.S.A.
LIC. EXP 04/30/26

ASMD LLC. A/E INFO

APPROVED
FOR COMMANDER NAVFAC

ACTIVITY
NATHANIEL PYRON, MILCON PLANNER, DPPH
SATISFACTORY TO DATE 3/10/2026

DES	AA	DRW AA/BK	CHK JG
PM/DM	DKS/DMK		
BRANCH MANAGER	KYM		
CHIEF ENG/ARCH	KYM		
FIRE PROTECTION	RYO		

DEPARTMENT OF THE NAVY
NAVAL FACILITIES ENGINEERING SYSTEMS COMMAND
NAVFAC PACIFIC
U.S. NAVSUPPACT

NAVAL FACILITIES ENGINEERING SYSTEMS COMMAND ~ PACIFIC
MAKALAPA, HAWAII
MCB CAMP BLAZ, GUAM

JFY 2022 PROJECT J-875
BATTLE STAFF TRAINING FACILITY

ENLARGED FF&E FLOOR PLAN - 2A

SCALE: AS NOTED
EPROJECT NO.: 1696746
CONSTR. CONTR. NO.
NAVFAC DRAWING NO. 17322006
SHEET 196 OF 468

I-810

DRAWFORM REVISION: 25 AUGUST 2020

KEY PLAN

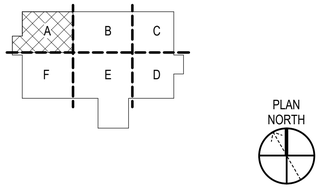

GRAPHIC SCALE(S)

1/4" = 1' - 0" 0 1' 5' 10' 15'

3/12/2026 9:06:35 PM I-810
C:\Users\mbatlanton\Documents\BLDG-875-1696746-A_dbatlantonsaFALVN.rvt

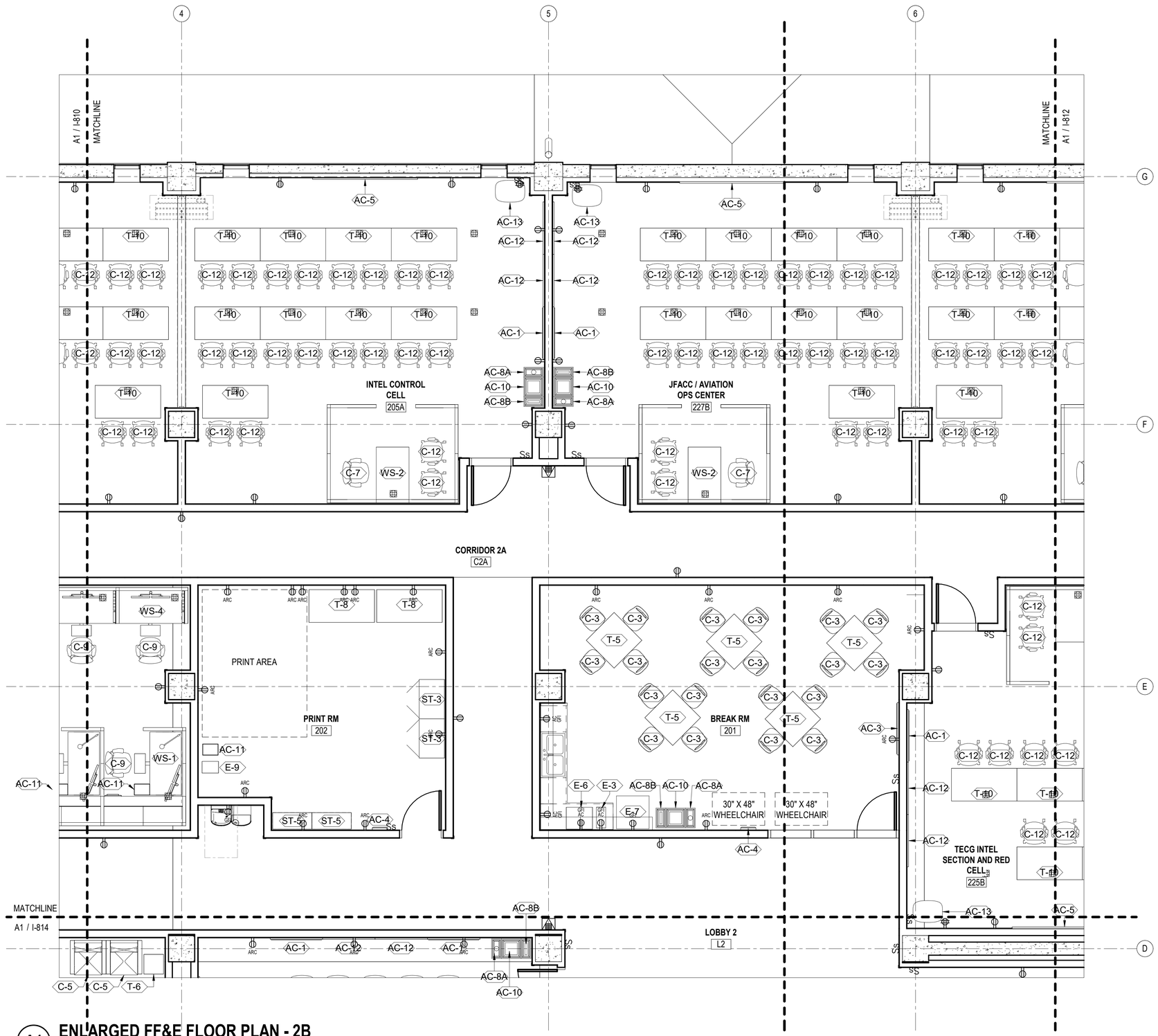

A1 ENLARGED FF&E FLOOR PLAN - 2B

SCALE: 1/4" = 1'-0"

GENERAL SHEET NOTES

1. REFER TO SHEET I-803 FOR FF&E SCHEDULE.
2. REFER TO THE SEPARATE AUDIO-VISUAL (AV) PACKAGE FOR ALL ITS SYSTEM COMPONENTS.

KEY PLAN

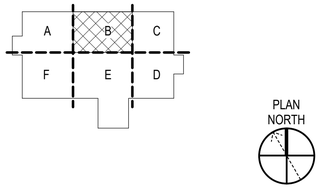

GRAPHIC SCALE(S)

1/4" = 1' - 0" 0 1' 5' 10' 15'

SYM	DESCRIPTION	DATE	APPR

NAVFAC

MYLES M. MICHIBATA — LICENSED PROFESSIONAL ARCHITECT — No. 12367 — HAWAII, U.S.A.
LIC. EXP 04/30/26

ASMD LLC.
A/E INFO

APPROVED
Evan Mizuno
FOR COMMANDER NAVFAC

ACTIVITY
NATHANIEL PYRON, MILCON PLANNER, DPPH

SATISFACTORY TO DATE	3/10/2026
DES AA	DRW AA/BK CHK JG
PMDM	DKS/DMK
BRANCH MANAGER	KYM
CHIEF ENG/ARCH	KYM
FIRE PROTECTION	RYO

DEPARTMENT OF THE NAVY
NAVAL FACILITIES ENGINEERING SYSTEMS COMMAND
NAVFAC PACIFIC
U.S. NAVSUPPACT

NAVAL FACILITIES ENGINEERING SYSTEMS COMMAND ~ PACIFIC
MAKALAPA, HAWAII

MCB CAMP BLAZ, GUAM

JFY 2022 PROJECT J-875
BATTLE STAFF TRAINING FACILITY

ENLARGED FF&E FLOOR PLAN - 2B

SCALE: AS NOTED
EPROJECT NO.: 1696746
CONSTR. CONTR. NO.
NAVFAC DRAWING NO. 17322007
SHEET 197 OF 468
I-811

DRAWFORM REVISION: 25 AUGUST 2020

3/12/2026 9:06:38 PM I-811
C:\Users\BlastIntern\Documents\BLDG-875-1696746-A_thalliintern-F4LVN.rvt

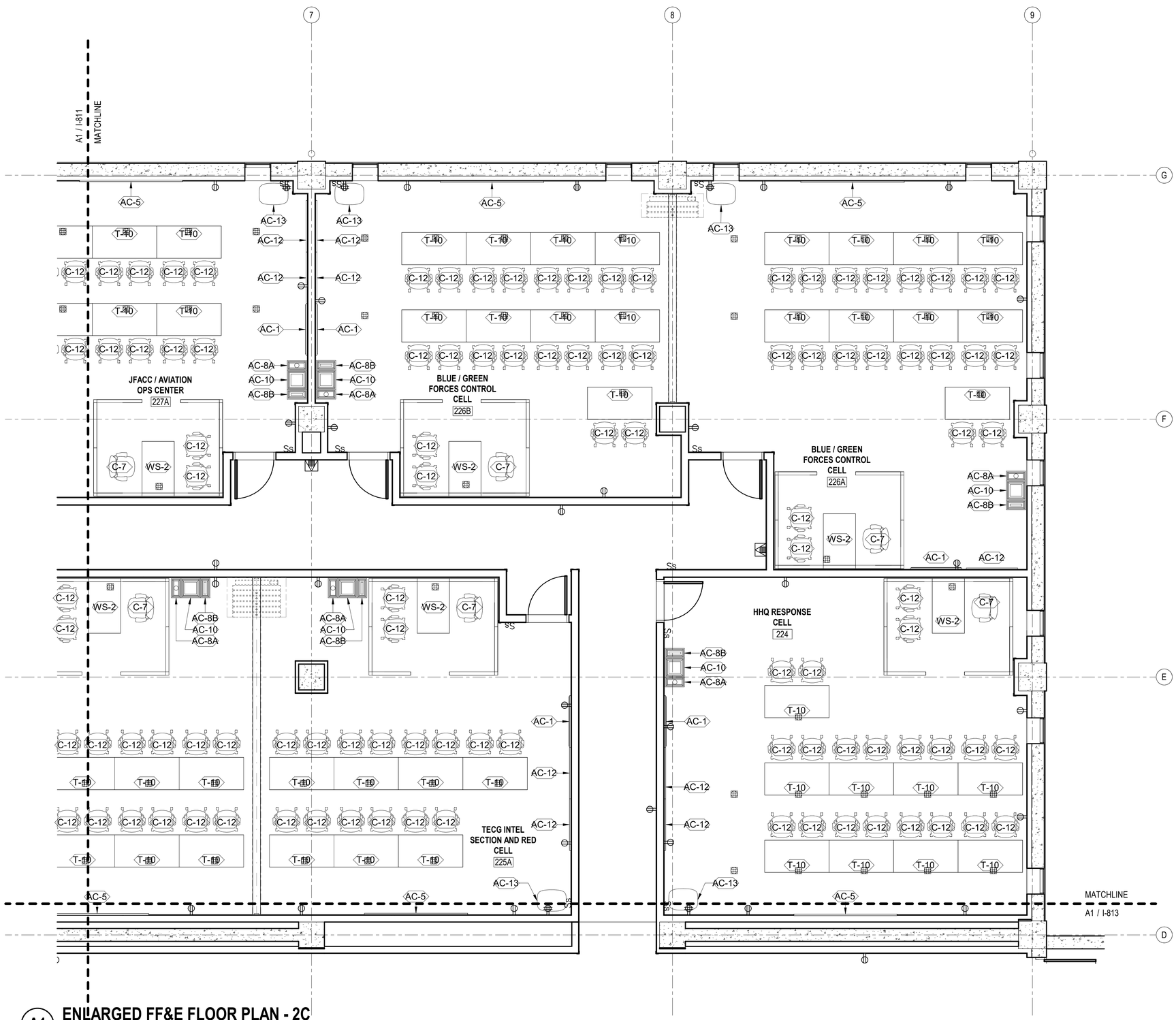

A1 ENLARGED FF&E FLOOR PLAN - 2C

SCALE: 1/4" = 1'-0"

GENERAL SHEET NOTES

1. REFER TO SHEET I-803 FOR FF&E SCHEDULE.
2. REFER TO THE SEPARATE AUDIO-VISUAL (AV) PACKAGE FOR ALL ITS SYSTEM COMPONENTS.

KEY PLAN

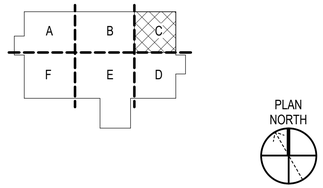

GRAPHIC SCALE(S)

1/4" = 1' - 0" 0 1' 5' 10' 15'

SYM	DESCRIPTION	DATE	APPR

NAVFAC

MYLES M. MICHIBATA LICENSED PROFESSIONAL ARCHITECT No. 12367 HAWAII, U.S.A.
LIC. EXP 04/30/26

ASMD LLC.
A/E INFO

APPROVED
Evan Mizuno
FOR COMMANDER NAVFAC

ACTIVITY
NATHANIEL PYRON, MILCON PLANNER, DPPH
SATISFACTORY TO DATE 3/10/2026

DES	AA	DRW AA/BK	CHK JG
PM/DM			DKS/DMK
BRANCH MANAGER			KYM
CHIEF ENG/ARCH			KYM
FIRE PROTECTION			RYO

NAVAL FACILITIES ENGINEERING SYSTEMS COMMAND
NAVAL FACILITIES ENGINEERING SYSTEMS COMMAND ~ PACIFIC
MAKALAPA, HAWAII
DEPARTMENT OF THE NAVY
NAVFAC PACIFIC
U.S. NAVSUPPACT
MCB CAMP BLAZ, GUAM
JFY 2022 PROJECT J-875
BATTLE STAFF TRAINING FACILITY
ENLARGED FF&E FLOOR PLAN - 2C

SCALE: AS NOTED
EPROJECT NO.: 1696746
CONSTR. CONTR. NO.
NAVFAC DRAWING NO. 17322008
SHEET 198 OF 468
I-812

DRAWFORM REVISION: 25 AUGUST 2020

3/12/2026 9:06:37 PM I-812
C:\Users\rtbaillinton\Documents\BLDG-875-1696746-A_rtbaillintonsaFF&LVN.rvt

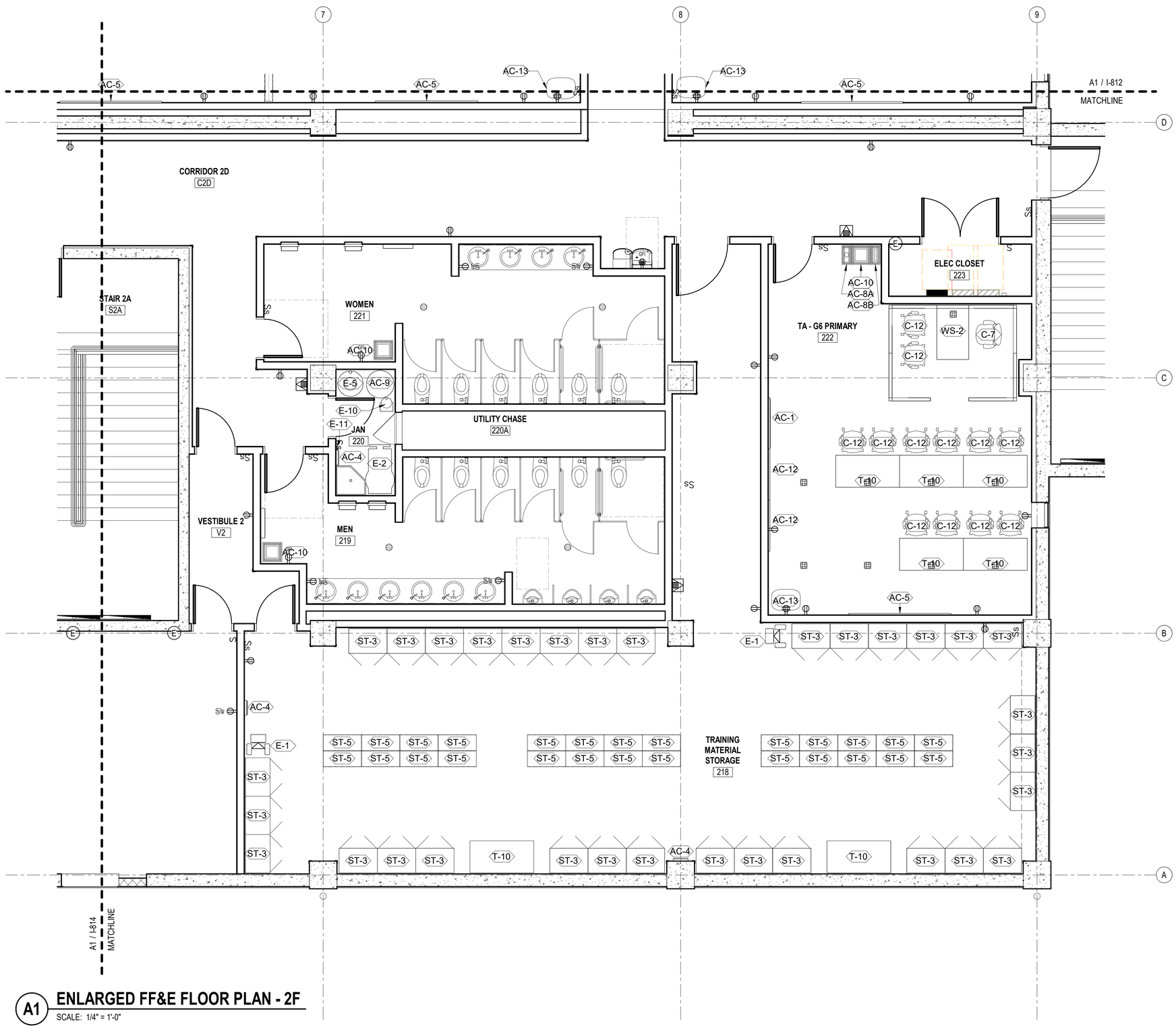

A1 ENLARGED FF&E FLOOR PLAN - 2F

SCALE: 1/4" = 1'-0"

GENERAL SHEET NOTES

1. REFER TO SHEET I-803 FOR FF&E SCHEDULE.
2. REFER TO THE SEPARATE AUDIO-VISUAL (AV) PACKAGE FOR ALL ITS SYSTEM COMPONENTS.

KEY PLAN

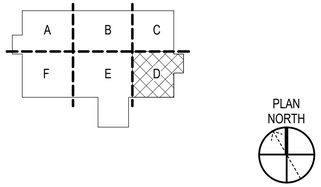

GRAPHIC SCALE(S)

1/4" = 1' - 0" 0 1' 5' 10' 15'

SYM	DESCRIPTION	DATE	APPR

NAVFAC

MYLES M. MICHIBATA LICENSED PROFESSIONAL ARCHITECT No. 12367 HAWAII, U.S.A.
LIC. EXP 04/30/26 SEAL

ASMD LLC. A/E INFO

APPROVED
FOR COMMANDER NAVFAC
ACTIVITY
NATHANIEL PYRON, MILCON PLANNER, DPPH
SATISFACTORY TO DATE 3/10/2026

DES	AA	DRW AA/BK	CHK JG
PM/DM			DKS/DMK
BRANCH MANAGER			KYM
CHIEF ENG/ARCH			KYM
FIRE PROTECTION			RYO

DEPARTMENT OF THE NAVY
NAVFAC PACIFIC
NAVAL FACILITIES ENGINEERING SYSTEMS COMMAND ~ PACIFIC
NAVAL FACILITIES ENGINEERING SYSTEMS COMMAND
MAKALAPA, HAWAII
U.S. NAVSUPPACT
MCB CAMP BLAZ, GUAM
JFY 2022 PROJECT J-875
BATTLE STAFF TRAINING FACILITY
ENLARGED FF&E FLOOR PLAN - 2D

SCALE: AS NOTED
EPROJECT NO.: 1696746
CONSTR. CONTR. NO.
NAVFAC DRAWING NO. 17322009
SHEET 199 OF 468
I-813

DRAWFORM REVISION: 25 AUGUST 2020

3/12/2026 9:06:38 PM
C:\Users\BaitmonaDocuments\BLDG-J875-1696746-A_rbaitmonaFALVN.rvt
I-813

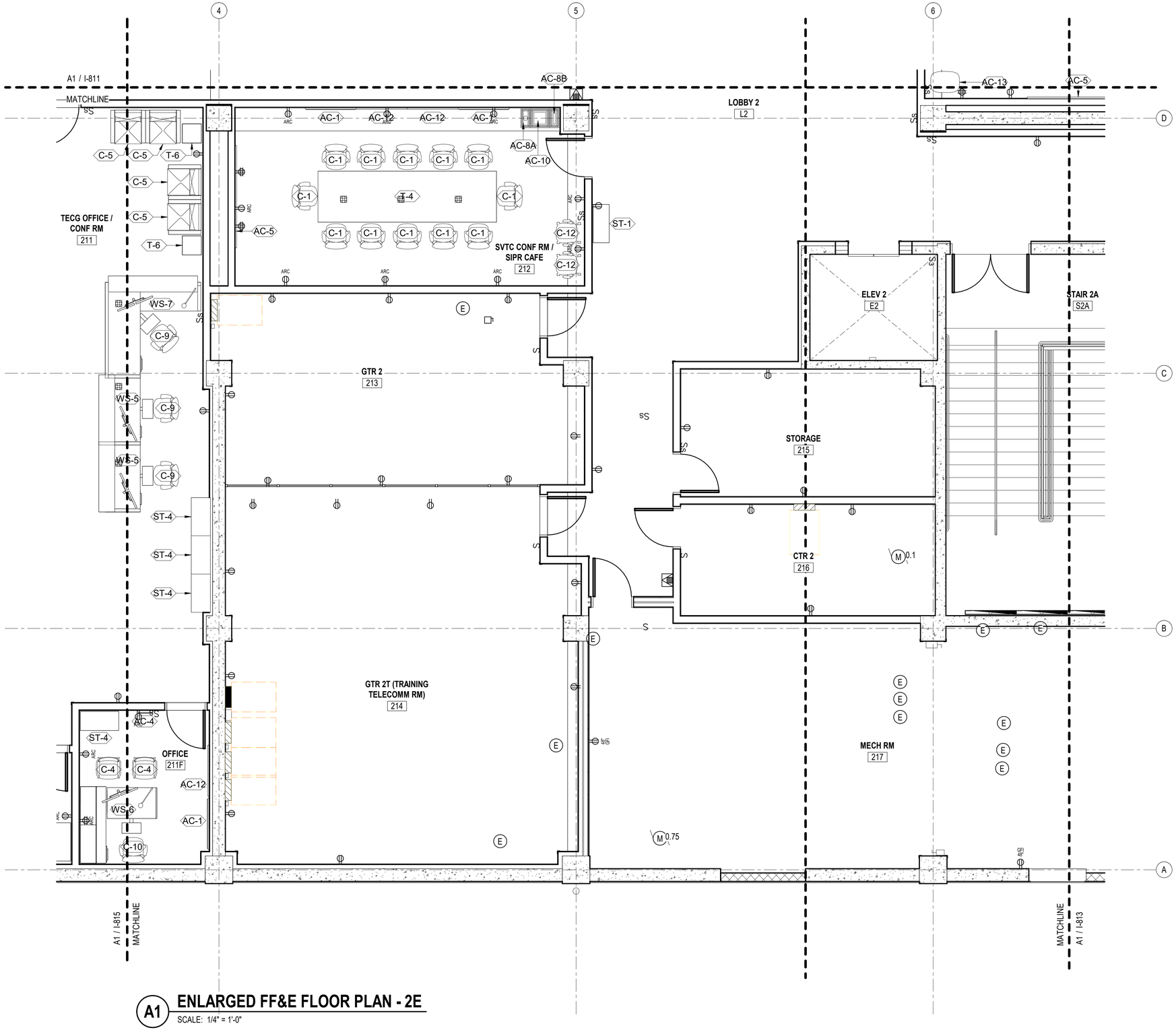

A1 ENLARGED FF&E FLOOR PLAN - 2E

SCALE: 1/4" = 1'-0"

GENERAL SHEET NOTES

1. REFER TO SHEET I-803 FOR FF&E SCHEDULE.
2. REFER TO THE SEPARATE AUDIO-VISUAL (AV) PACKAGE FOR ALL ITS SYSTEM COMPONENTS.

SYM	DESCRIPTION	DATE	APPR

NAVFAC

MYLES M. MICHIBATA LICENSED PROFESSIONAL ARCHITECT No. 12367 HAWAII, U.S.A.
LIC. EXP 04/30/26

ASMD LLC.

APPROVED
FOR COMMANDER NAVFAC

ACTIVITY
NATHANIEL PYRON, MILCON PLANNER, DPPH

SATISFACTORY TO DATE 3/10/2026

DES	AA	DRW AA/BK	CHK JG
PM/DM	DKS/DMK		
BRANCH MANAGER	KYM		
CHIEF ENG/ARCH	KYM		
FIRE PROTECTION	RYO		

DEPARTMENT OF THE NAVY
NAVAL FACILITIES ENGINEERING SYSTEMS COMMAND ~ PACIFIC
NAVFAC PACIFIC
U.S. NAVSUPPACT

NAVAL FACILITIES ENGINEERING SYSTEMS COMMAND
MAKALAPA, HAWAII
MCB CAMP BLAZ, GUAM

JFY 2022 PROJECT J-875
BATTLE STAFF TRAINING FACILITY

ENLARGED FF&E FLOOR PLAN - 2E

SCALE: AS NOTED
EPROJECT NO.: 1696746
CONSTR. CONTR. NO.
NAVFAC DRAWING NO. 17322010
SHEET 200 OF 468

I-814

DRAWFORM REVISION: 25 AUGUST 2020

KEY PLAN

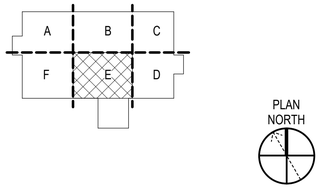

GRAPHIC SCALE(S)

1/4" = 1' - 0" 0 1' 5' 10' 15'

3/12/2026 9:06:39 PM I-814
C:\Users\nbattlions\Documents\BLDG-875-1696746-A_nbattlionsaFF-ALVN.rvt

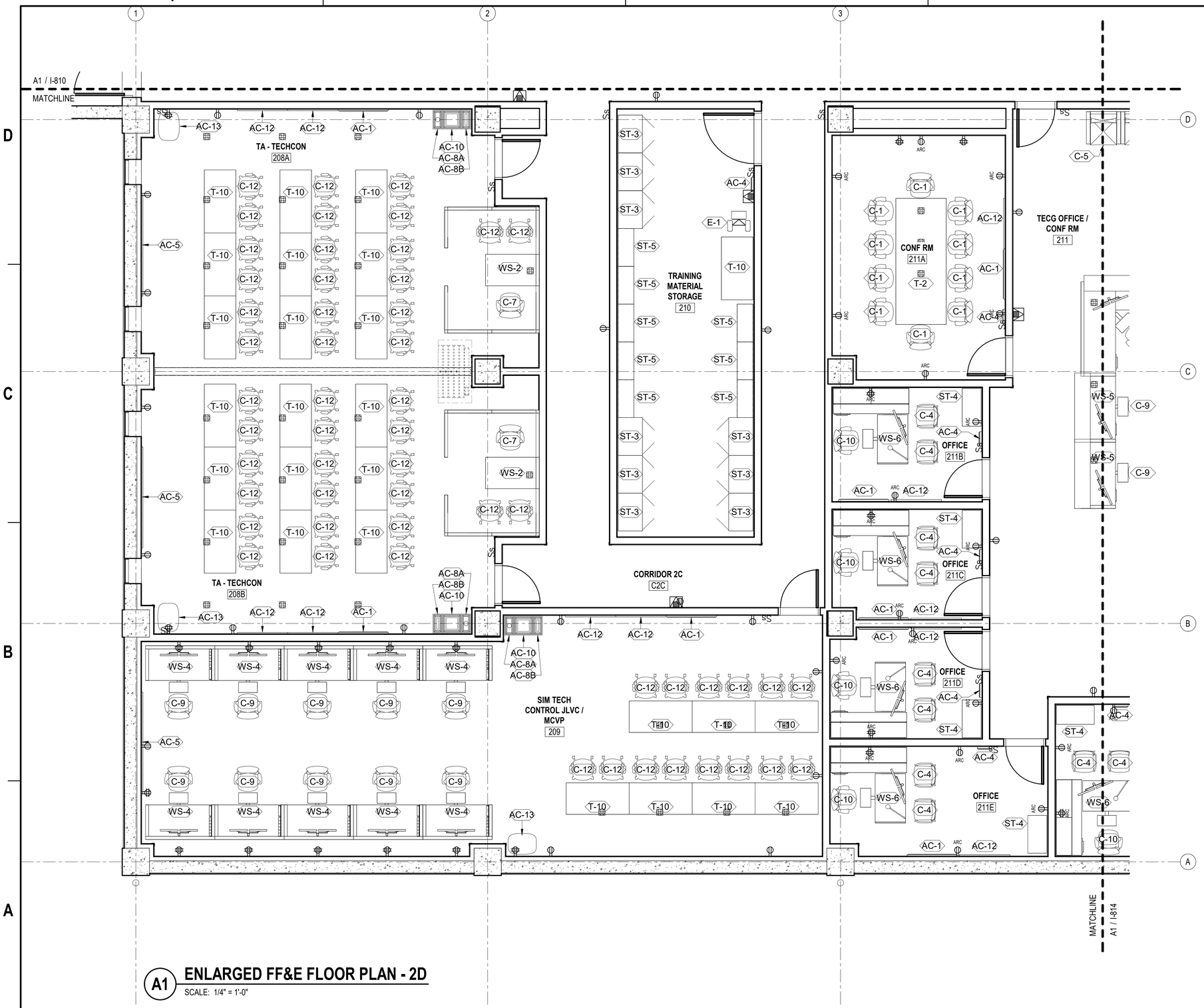

A1 ENLARGED FF&E FLOOR PLAN - 2D

SCALE: 1/4" = 1'-0"

GENERAL SHEET NOTES

1. REFER TO SHEET I-803 FOR FF&E SCHEDULE.
2. REFER TO THE SEPARATE AUDIO-VISUAL (AV) PACKAGE FOR ALL ITS SYSTEM COMPONENTS.

KEY PLAN

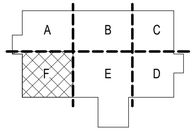

PLAN NORTH

GRAPHIC SCALE(S)

1/4" = 1' - 0" 0 1' 5' 10' 15'

SYM	DESCRIPTION	DATE	APPR

NAVFAC

MYLES M. MICHIBATA — LICENSED PROFESSIONAL ARCHITECT — No. 12367 — HAWAII, U.S.A.
LIC. EXP 04/30/26 SEAL

ASMD LLC.
A/E INFO

APPROVED
FOR COMMANDER NAVFAC

ACTIVITY
NATHANIEL PYRON, MILCON PLANNER, DPPH
SATISFACTORY TO DATE 3/10/2026

DES	AA	DRW AA/BK	CHK JG
PMDM	DKS/DMK		
BRANCH MANAGER	KYM		
CHIEF ENG/ARCH	KYM		
FIRE PROTECTION	RYO		

DEPARTMENT OF THE NAVY
NAVFAC PACIFIC
U.S. NAVSUPPACT

NAVAL FACILITIES ENGINEERING SYSTEMS COMMAND ~ PACIFIC
NAVAL FACILITIES ENGINEERING SYSTEMS COMMAND
MAKALAPA, HAWAII

MCB CAMP BLAZ, GUAM

JFY 2022 PROJECT J-875
BATTLE STAFF TRAINING FACILITY

ENLARGED FF&E FLOOR PLAN - 2F

SCALE: AS NOTED
EPROJECT NO.: 1696746
CONSTR. CONTR. NO.
NAVFAC DRAWING NO. 17322011
SHEET 201 OF 468

I-815

DRAWFORM REVISION: 25 AUGUST 2020

I-815
3/12/2026 9:06:41 PM
C:\Users\tbellmond\Documents\BLDG-875-1696746-A_rbellmond-FAL\N.rvt

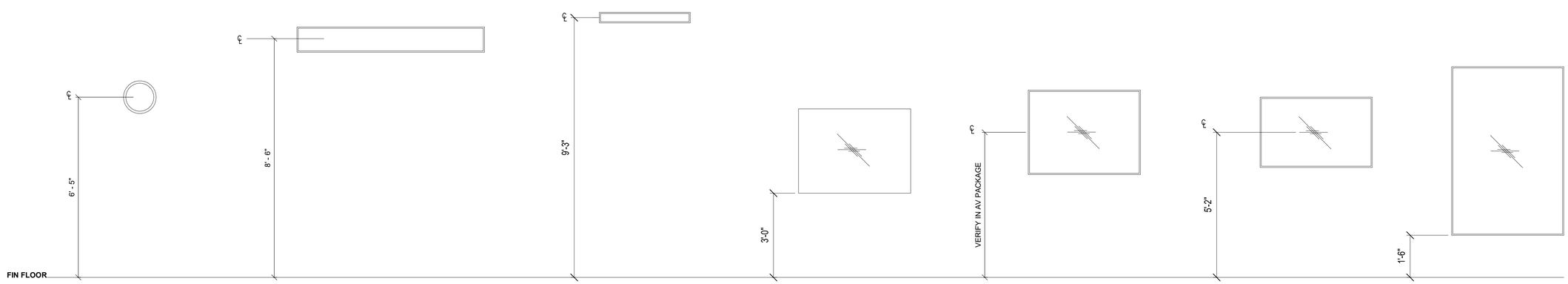

WALL-MOUNTED ANALOG CLOCK

WALL-MOUNTED MULTI-ZONE CLOCK U.O.N.

WALL-MOUNTED TRAINING CLOCK

WALL-MOUNTED MAGNETIC GLASSBOARDS & BULLETIN BOARDS

WALL-MOUNTED DISPLAY MONITOR

WALL-MOUNTED ARTWORK 1 VERIFY IN ARTWORK PACKAGE

WALL-MOUNTED ARTWORK 2 VERIFY IN ARTWORK PACKAGE

A1 TYPICAL MOUNTING HEIGHTS - FF&E

SCALE: 1/2" = 1'-0"

SYM	DESCRIPTION	DATE	APPR

NAVFAC

MYLES M. MICHIBATA
LICENSED PROFESSIONAL ARCHITECT
No. 12367
HAWAII, U.S.A.
LIC. EXP 04/30/26

ASMD LLC.
A/E INFO

APPROVED
Evan Mizel
FOR COMMANDER NAVFAC

ACTIVITY
NATHANIEL PYRON, MILCON PLANNER, DPPH

SATISFACTORY TO DATE 3/10/2026

DES AA | DRW AA/BK | CHK JG

PMDM DKS/DMK

BRANCH MANAGER KYM

CHIEF ENG/ARCH KYM

FIRE PROTECTION RYO

DEPARTMENT OF THE NAVY
NAVAL FACILITIES ENGINEERING SYSTEMS COMMAND
NAVFAC PACIFIC
U.S. NAVSUPPACT

NAVAL FACILITIES ENGINEERING SYSTEMS COMMAND ~ PACIFIC
MAKALAPA, HAWAII

MCB CAMP BLAZ, GUAM

JFY 2022 PROJECT J-875
BATTLE STAFF TRAINING FACILITY

TYPICAL MOUNTING HEIGHTS - FF&E

SCALE: AS NOTED

EPROJECT NO.: 1696746

CONSTR. CONTR. NO.

NAVFAC DRAWING NO.
17322012

SHEET 202 OF 468

I-816

DRAWFORM REVISION: 25 AUGUST 2020

3/12/2026 9:06:41 PM
C:\Users\BaMonte\Documents\BLDG-3875-1696746-A_rhabintionsnFE-LVN.rvt
I-816

AUTOMATIC SPRINKLER SYSTEM NOTES:

1. THE SPRINKLER SYSTEM DESIGN AND INSTALLATION MUST BE IN ACCORDANCE WITH NFPA 13-2025, AND SPECIFICATION SECTION 21 13 13. THE CONTRACTOR MUST VERIFY THE LOCATION OF ALL SPRINKLER SYSTEM COMPONENTS AND COORDINATE WITH THE VARIOUS TRADES.

2. ALL DEVICES AND EQUIPMENT MUST BE UL LISTED OR FM APPROVED.

3. AUTOMATIC SPRINKLER PROTECTION MUST BE PROVIDED THROUGHOUT THE BUILDING.

4. WATER SUPPLY INFORMATION: DATA PROVIDED BY A FLOW TEST CONDUCTED BY COFFMAN ENGINEERS AT THE SITE ON WATCHTOWER ROAD ON DECEMBER 9, 2025 IS AS FOLLOWS:

STATIC PRESSURE:	87 PSI
RESIDUAL PRESSURE:	20 PSI
FLOW AT RESIDUAL PRESSURE:	2158 GPM

5. THE SPRINKLER SYSTEM MUST BE HYDRAULICALLY DESIGNED IN ACCORDANCE WITH NFPA 13-2025 CRITERIA. SPRINKLER SYSTEM DESIGN CRITERIA MUST BE AS FOLLOWS:

WET PIPE SYSTEMS

OFFICES, CORRIDORS, COMMON AREAS, AND COMBUSTIBLE CONCEALED SPACES (AS DEFINED IN NFPA 13):

OCCUPANCY HAZARD CLASSIFICATION:	LIGHT HAZARD
DESIGN DENSITY:	0.10 GPM/SF
DESIGN AREA:	1,500 SF
SPRINKLER TYPE:	QUICK RESPONSE TYPE, 5.6 K-FACTOR
SPRINKLER TEMPERATURE:	ORDINARY TEMPERATURE
HOSE STREAM:	250 GPM
DURATION:	60 MINUTES

GENERAL STORAGE, ELEC, MECH:

OCCUPANCY HAZARD CLASSIFICATION:	ORDINARY HAZARD
DESIGN DENSITY:	0.20 GPM/SF
DESIGN AREA:	2,500 SF
SPRINKLER TYPE:	QUICK RESPONSE TYPE, 8.0 K-FACTOR
SPRINKLER TEMPERATURE:	INTERMEDIATE TEMPERATURE
HOSE STREAM:	250 GPM
DURATION:	60 MINUTES

STORAGE/MAINTENANCE BAYS:

OCCUPANCY HAZARD CLASSIFICATION:	EXTRA HAZARD GROUP 2 (NFPA 13, TABLE 4.3.1.7.1.1)
DESIGN DENSITY:	0.40 GPM/SF
DESIGN AREA:	2,500 SF
SPRINKLER TYPE:	STANDARD RESPONSE TYPE, 11.2 K-FACTOR
SPRINKLER TEMPERATURE:	INTERMEDIATE TEMPERATURE
HOSE STREAM:	500 GPM
DURATION:	90 MINUTES

UTILITY BUILDING/EMERGENCY GENERATOR ROOM:

OCCUPANCY HAZARD CLASSIFICATION:	NFPA 37, SECTION 11.4.5.1
DESIGN DENSITY:	0.30 GPM/SF
DESIGN AREA:	2,500 SF (ENTIRE BUILDING)
SPRINKLER TYPE:	STANDARD RESPONSE TYPE, 11.2 K-FACTOR
SPRINKLER TEMPERATURE:	INTERMEDIATE TEMPERATURE
HOSE STREAM:	500 GPM
DURATION:	90 MINUTES

6. SPRINKLERS MUST BE LOCATED IN THE CENTER OF CEILING TILES WHERE APPLICABLE.

7. SPRINKLER PIPING MUST COMPLY WITH NFPA 13-2025, EXCEPT THAT COPPER AND PLASTIC PIPE ARE NOT BE PERMITTED. FLEXIBLE HOSE SPRINKLERS MUST NOT BE PERMITTED. ALL PIPING AND FITTINGS ON THE FIRE SPRINKLER RISER MUST BE PAINTED. STEEL PIPE MUST BE MINIMUM SCHEDULE 40 FOR SIZES 2 INCHES AND LESS; AND MINIMUM SCHEDULE 10 FOR SIZES LARGER THAN 2 INCHES. ALL PIPING IN FINISHED AREAS MUST BE CONCEALED.

8. THE PIPE ROUTING AND SPRINKLER LOCATIONS ARE CONCEPTUAL. THE CONTRACTOR MUST INSTALL THE SYSTEM IN ACCORDANCE WITH THE APPLICABLE CODES, MANUFACTURER'S RECOMMENDATIONS AND EQUIPMENT LISTINGS.

9. PIPING MUST BE PROVIDED WITH EARTHQUAKE PROTECTION IN ACCORDANCE WITH NFPA 13-2025 AND SPECIFICATION SECTION 21 13 13. PROVIDE BRANCH LINE RESTRAINTS. CP MUST BE 1.31 WITH AN SS = 279 FOR GUAM.

10. PROVIDE A PRESSURE RELIEF VALVE AT THE FIRE SPRINKLER RISER IN ACCORDANCE WITH NFPA 13-2025.

11. THE HYDRAULIC CALCULATIONS MUST INCLUDE A 8 PSI LOSS THROUGH THE DOUBLE CHECK VALVE BACKFLOW PREVENTER.

12. SPRINKLER SYSTEM PAINTING MUST BE IN ACCORDANCE WITH SPECIFICATION SECTION 21 13 13.

13. SPRINKLER PIPING MUST BE OFFSET FROM ELECTRICAL EQUIPMENT IN THE ELECTRICAL ROOMS AND MUST NOT BE LOCATED OVER ANY DEDICATED ELECTRICAL EQUIPMENT.

14. PROVIDE AIR VENTS AS REQUIRED BY NFPA 13-2025, PARAGRAPH 8.1.5. AIR VENTS MUST BE AUTOMATIC TYPE AND PIPED TO A DRAIN AS REQUIRED BY SPECIFICATION SECTION 21 13 13 SECTION 2.8.6.

15. SPARE SPRINKLERS MUST BE PROVIDED IN ACCORDANCE WITH NFPA 13-2025. HYDRAULIC DATA PLATES MUST BE PROVIDED AT THE RISER AND ABOVE THE FIRE SPRINKLER CABINET. PROVIDE APPROPRIATE WRENCHES FOR EACH TYPE OF SPRINKLER HEAD PROVIDED. PROVIDE LIST OF SPRINKLERS INSTALLED IN THE SPRINKLER CABINET IN ACCORDANCE WITH NFPA 13.

16. ALL PENETRATIONS THROUGH FIRE RATED WALLS/FLOORS MUST BE PROVIDED WITH THE APPROPRIATE UL LISTED FIRESTOPPING SYSTEM.

FIRE ALARM/MASS NOTIFICATION NOTES:

1. THE FIRE ALARM SYSTEM MUST BE DESIGNED AND INSTALLED IN ACCORDANCE WITH NFPA 72-2025 AND SPECIFICATION SECTION 28 31 76.

2. ALL DEVICES AND EQUIPMENT MUST BE UL LISTED OR FM APPROVED.

3. DEVICE LOCATIONS AND CONDUIT ROUTING ARE CONCEPTUAL. FINAL QUANTITY AND LAYOUT MUST BE IN ACCORDANCE WITH APPLICABLE CODES, MANUFACTURER'S RECOMMENDATIONS, AND EQUIPMENT LISTINGS. COORDINATE LOCATIONS WITH CEILING AND BELOW FLOOR ELECTRICAL INSTALLATION.

4. ALL FIRE ALARM CONDUIT MUST BE 3/4-INCH MINIMUM. ALL CONDUIT IN FINISHED AREAS MUST BE CONCEALED.

5. SYNCHRONIZE ALL VISUAL NOTIFICATION APPLIANCES. SYNCHRONIZE ALL AUDIBLE NOTIFICATION APPLIANCES.

6. THE FIRE ALARM SIGNAL MUST BE A FEMALE VOICE SIGNAL.

7. VISUAL NOTIFICATION APPLIANCES MUST BE SPACED IN ACCORDANCE WITH NFPA 72-2025.

8. SIGNALING LINE CIRCUITS MUST BE CLASS B, INITIATING DEVICE CIRCUITS MUST BE CLASS B, NOTIFICATION APPLIANCE CIRCUITS MUST BE CLASS B.

9. SMOKE DETECTORS MUST BE LOCATED A MINIMUM OF 3 FEET FROM SUPPLY AND RETURN AIR DIFFUSERS.

10. PROVIDE SIGNAGE AT THE FMCP IDENTIFYING THE POWER PANEL AND CIRCUIT.

11. TESTING MUST INCLUDE INTELLIGIBILITY MEASUREMENTS. THE CIS VALUE MUST BE 0.70 OR HIGHER.

12. THE FIRE ALARM/ MASS NOTIFICATION AMPLIFIERS MUST BE LOCATED IN THE MAIN PANEL AND MUST BE PROVIDED WITH A BACKUP AMPLIFIER.

13. ALL CIRCUITS MUST BE PULLED FROM DEVICE TO DEVICE. NO SPLICES OR T-TAPPING IS ALLOWED. ALL DEVICES MUST HAVE SCREW TERMINALS. WHERE DEVICES ARE ONLY PROVIDED WITH PIGTAILS FROM THE MANUFACTURER, PIGTAILS MUST BE LANDED ON TERMINAL STRIPS MOUNTED WITHIN THE JUNCTION BOX.

14. FIRE ALARM/ MASS NOTIFICATION VISUAL DEVICES MUST BE WHITE AND MARKED "ALERT" WITH CLEAR LENSES.

15. PAINT ALL FIRE ALARM JUNCTION BOXES AND COVERS RED IN UNFINISHED AREAS (I.E. ABOVE CEILINGS, MECHANICAL ROOMS, ETC). IN FINISHED AREAS, CONDUIT AND JUNCTION BOXES CAN BE PAINTED TO MATCH THE ROOM FINISH. THE INSIDE COVER OF THE JUNCTION BOX MUST BE IDENTIFIED AS "FIRE ALARM" AND THE CONDUIT MUST HAVE PAINTED RED BANDS 3/4-INCH WIDE AT 20 FEET CENTERS AND AT EACH SIDE OF A FLOOR, WALL OR CEILING PENETRATION.

16. PROVIDE A CABINET NEXT TO THE FIRE ALARM CONTROL PANEL LABELED "FIRE ALARM DOCUMENTS". THE CABINET MUST CONTAIN THE FINAL RECORD OF COMPLETION AND THE FIRE ALARM AS-BUILT UPDATED, APPROVED, SHOP DRAWINGS. PROVIDE DOCUMENTATION OF THE SOFTWARE AND FIRMWARE VERSIONS USED.

17. THE FIRE ALARM/ MASS NOTIFICATION SYSTEM MUST BE CAPABLE OF PROVIDING 500 INDIVIDUAL ADDRESSES.

18. THE CONTRACTOR MUST BE RESPONSIBLE FOR COORDINATING THE WORK AMONGST THE VARIOUS TRADES AS NECESSARY TO AVOID CONFLICTS AND TO ENSURE THE INSTALLATION OF ALL WORK WILL FIT WITHIN THE AVAILABLE SPACE.

19. PROVIDE ADDITIONAL EXTENDER PANELS AS REQUIRED.

20. THE BASE WIDE MASS NOTIFICATION SYSTEM IS A FEDERAL SIGNAL SYSTEM. THE MASS NOTIFICATION REPORTING PORTION OF THE SYSTEM MUST BE COMPATIBLE WITH THE EXISTING BASE MASS NOTIFICATION RECEIVING STATION FEDERAL SIGNAL EQUIPMENT.

    PROVIDE A FEDERAL SIGNAL MASS NOTIFICATION TRANSCEIVER TO CONNECT TO THE BASE RECEIVING STATION.

21. PROVIDE A KING FISHER FIRE ALARM TRANSMITTER TO TRANSMIT TO THE NAVY E911 RECEIVING STATION.

22. PROVIDE DUCT SMOKE DETECTORS ON THE SUPPLY SIDE OF ALL AIR-HANDLING UNITS OVER 2,000 CFM PER NFPA 90A-2024.

23. ALL EXTERIOR FIRE ALARM DEVICES AND APPLIANCES MUST BE WEATHERPROOF.

FIRE PROTECTION SYMBOLS AND ABBREVIATIONS

SYMBOL	DESCRIPTION
	WET PIPE FIRE SPRINKLER RISER
	PIPE / CONDUIT DOWN
	PIPE / CONDUIT BREAK FOR CONTINUATION OR CLARITY
	TEST HEADER
	FIRE DEPARTMENT CONNECTION
	ELECTRIC BELL
FMCP	COMBINATION FIRE ALARM/MASS NOTIFICATION CONTROL PANEL
TVSS	TRANSIENT VOLTAGE SURGE SUPPRESSOR
FEP	POWER EXTENDER PANEL
AMP	AMPLIFIER
LOC	LOCAL OPERATING CONSOLE
ANN	FIRE ALARM / MASS NOTIFICATION ANNUNCIATOR
FTR	FIRE ALARM TRANSMITTER
MTR	MASS NOTIFICATION TRANSCEIVER
FTA	FIRE ALARM TRANSMITTER ANTENNA
MTA	MASS NOTIFICATION TRANSCEIVER ANTENNA
FCV	FLOOR CONTROL VALVE
ECV	ELEVATOR CONTROL VALVE
VS	TAMPER SWITCH
WF	WATERFLOW SWITCH
S/P	PHOTOELECTRIC SMOKE DETECTOR
S/P,E	ELEVATOR PHOTOELECTRIC SMOKE DETECTOR
S	DUCT SMOKE DETECTOR
CO	CARBON MONOXIDE DETECTOR
F	MANUAL PULL STATION
S	SPEAKER ONLY
	COMBINATION SPEAKER / VISIBLE DEVICE
	VISUAL ONLY, CEILING MOUNTED
	VISUAL ONLY, WALL MOUNTED
AIM	ADDRESSABLE INPUT MODULE
AOM	ADDRESSABLE OUTPUT MODULE
R	24 VOLT RELAY
AFF	ABOVE FINISH FLOOR
(TYP)	TYPICAL
WP	WEATHERPROOF

SYM	DESCRIPTION	DATE	APPR

NAVFAC

JAY THOMAS HIGASHI
STATE OF WASHINGTON
31715
REGISTERED PROFESSIONAL ENGINEER
01/22/2026
Expiration Date of the License
SEAL

ASMD LLC.
A/E INFO

APPROVED
Evan Miyal
FOR COMMANDER NAVFAC

ACTIVITY
NATHANIEL PYRON, MILCON PLANNER, DPPH

SATISFACTORY TO DATE	3/10/2026		
DES JTH	DRW AM	CHK RTB	
PMDM	DKS/DMK		
BRANCH MANAGER	KYM		
CHIEF ENG/ARCH	KYM		
FIRE PROTECTION	RYO		

DEPARTMENT OF THE NAVY
NAVAL FACILITIES ENGINEERING SYSTEMS COMMAND ~ PACIFIC
NAVFAC PACIFIC
U.S. NAVSUPPACT
NAVAL FACILITIES ENGINEERING SYSTEMS COMMAND ~ PACIFIC
MAKALAPA, HAWAII
MCB CAMP BLAZ, GUAM
JFY 2022 PROJECT J-875
BATTLE STAFF TRAINING FACILITY
FIRE PROTECTION NOTES, SYMBOLS AND ABBREVIATIONS

SCALE: AS NOTED
EPROJECT NO.: 1696746
CONSTR. CONTR. NO.
NAVFAC DRAWING NO. 17322023
SHEET 203 OF 468
F-001
DRAWFORM REVISION: 25 AUGUST 2020

3/11/2026 9:38:04 PM F-001
P:\Hon22Jobs\22771 J-875 Battle Staff Training\Revit\LOCAL\BLDG-J875-1696746-F-local.rvt

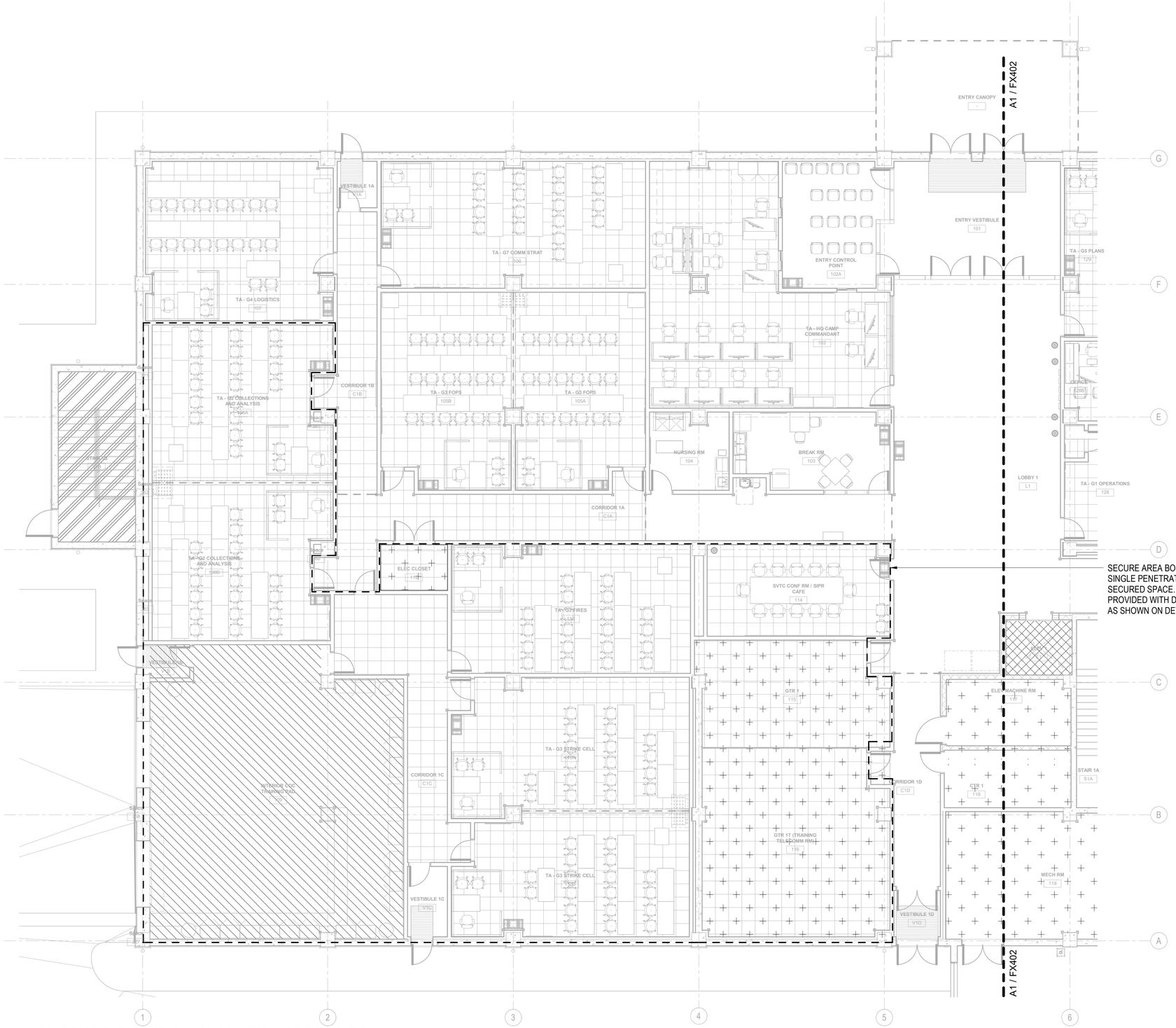

SECURE AREA BOUNDRY. PROVIDE ONLY SINGLE PENETRATION FOR PIPE INTO SECURED SPACE. PENETRATION MUST BE PROVIDED WITH DEIELETRIC UNION BREAK AS SHOWN ON DETAIL C2/FX501.

LEGEND FOR HAZARD GROUPS

SYMBOL	DESCRIPTION
	LIGHT HAZARD
	ORDINARY HAZARD
	EXTRA HAZARD GROUP 2
	PROVIDE STANDARD RESPONSE SIDEWALL SPRINKLER HEAD WITHIN 24 INCHES OF THE ELEVATOR PIT FLOOR. NO OTHER REQUIREMENTS FOR FIRE SPRINKLER COVERAGE.
	PROVIDE SPRINKLER HEADS BENEATH THE FIRST LANDING AND AT THE TOP OF STAIRWELL. NO OTHER REQUIREMENTS FOR FIRE SPRINKLER COVERAGE.

GENERAL NOTES:

1. PROVIDE A SINGLE AIR VENT ON 2ND FLOOR AT THE HIGHEST POINT OF SPRINKLER BRANCHLINE PIPING IN ACCORDANCE WITH NFPA 13.

2. SPRINKLER MAIN PIPING MUST NOT BE ROUTED THROUGH ELECTRICAL ROOMS. SPRINKLER PIPING AND SPRINKLER HEADS MUST NOT BE ROUTED OR INSTALLED OVER ELECTRICAL EQUIPMENT PER NFPA 70 ARTICLE 110.26(E)(1)(A). IN TELECOM ROOMS, PROVIDE DRIP TROUGHS BENEATH SPRINKLER HEADS/PIPING AND PROVIDE SPRINKLER GUARDS ON ALL SPRINKLER HEADS.

3. ALL EXTERIOR SPRINKLER PIPING OR PIPING EXPOSED TO WEATHER MUST BE COATED WITH MARINE GRADE EPOXY.

KEY PLAN

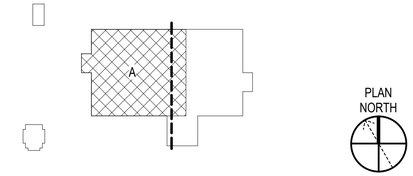

GRAPHIC SCALE(S)

1/8" =1'-0" 0' 4' 8' 16'

A1 ENLARGED FLOOR PLAN 1A - FIRE SPRINKLER

SCALE: 1/8" = 1'-0"

SYM	DESCRIPTION	DATE	APPR

NAVFAC

JAY THOMAS HIGASHI — STATE OF WASHINGTON — 31710 — REGISTERED PROFESSIONAL ENGINEER
01/22/2026
Expiration Date of the License — SEAL

ASMD LLC.
A/E INFO

APPROVED
Evan Miyazaki
FOR COMMANDER NAVFAC

ACTIVITY: NATHANIEL PYRON, MILCON PLANNER, DPPH
SATISFACTORY TO DATE: 3/10/2026
DES: JTH | DRW: AM | CHK: RTB
PM/DM: DKS/DMK
BRANCH MANAGER: KYM
CHIEF ENG/ARCH: KYM
FIRE PROTECTION: RYO

DEPARTMENT OF THE NAVY
NAVAL FACILITIES ENGINEERING SYSTEMS COMMAND – PACIFIC
NAVFAC PACIFIC
U.S. NAVSUPPACT
NAVAL FACILITIES ENGINEERING SYSTEMS COMMAND
MAKALAPA, HAWAII
MCB CAMP BLAZ, GUAM
JFY 2022 PROJECT J-875
BATTLE STAFF TRAINING FACILITY
ENLARGED FLOOR PLAN 1A - FIRE SPRINKLER

SCALE: AS NOTED
EPROJECT NO.: 1696746
CONSTR. CONTR. NO.
NAVFAC DRAWING NO. 17322024
SHEET 204 OF 468
FX401

DRAWFORM REVISION: 25 AUGUST 2020

FX401
3/11/2026 10:13:29 PM
P:\Horiz22\Jobs\222771 J-875 Battle Staff Training\Revit\LOCAL\BLDG-J875-1696746-F-local.rvt

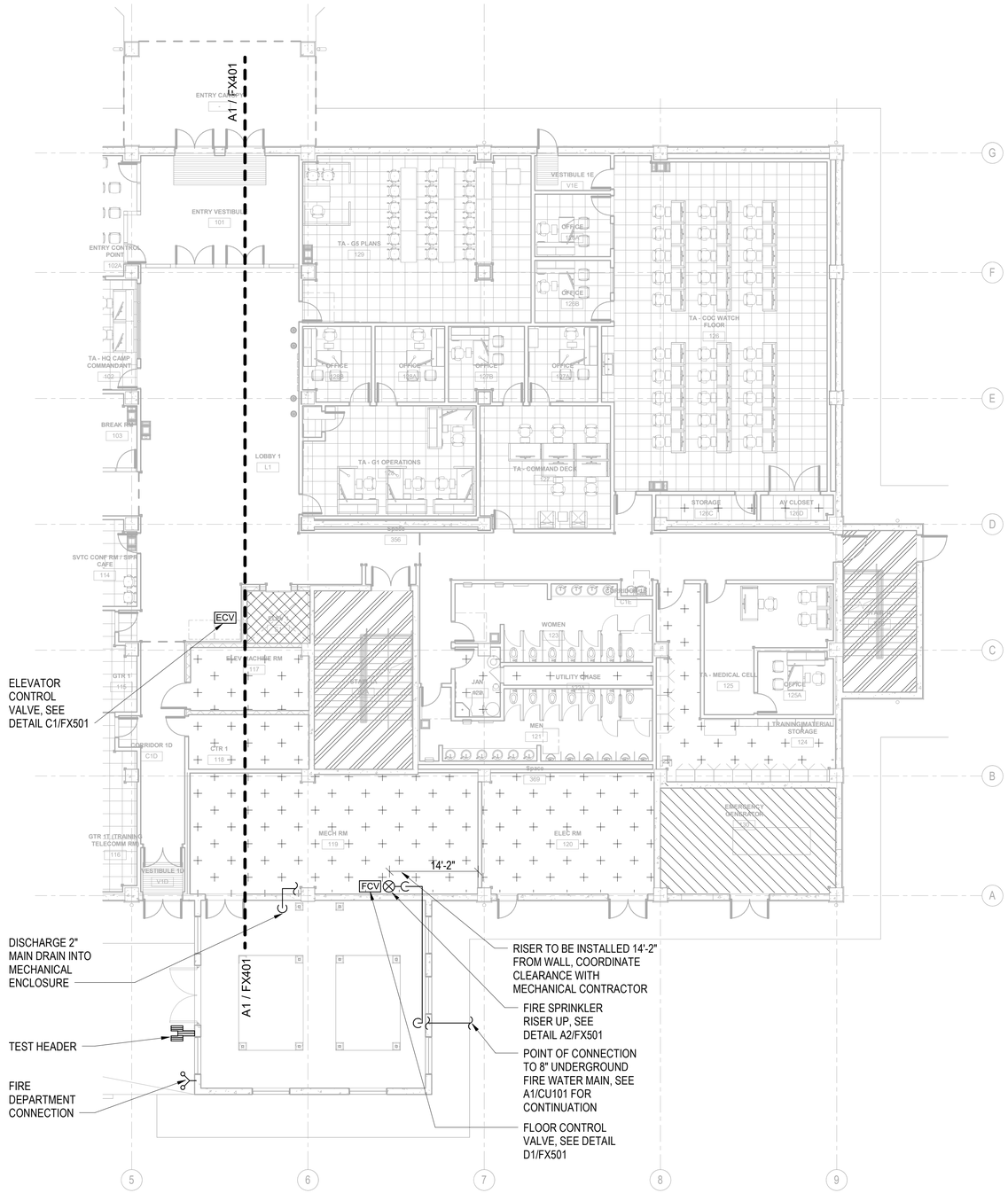

A1 ENLARGED FLOOR PLAN 1B - FIRE SPRINKLER

SCALE: 3/32" = 1'-0"

LEGEND FOR HAZARD GROUPS

SYMBOL	DESCRIPTION
	LIGHT HAZARD
	ORDINARY HAZARD
	EXTRA HAZARD
	PROVIDE STANDARD RESPONSE SIDEWALL SPRINKLER HEAD WITHIN 24 INCHES OF THE ELEVATOR PIT FLOOR. NO OTHER REQUIREMENTS FOR FIRE SPRINKLER COVERAGE.
	PROVIDE SPRINKLER HEADS BENEATH THE FIRST LANDING AND AT THE TOP OF STAIRWELL. NO OTHER REQUIREMENTS FOR FIRE SPRINKLER COVERAGE.

GENERAL NOTES:

1. PROVIDE A SINGLE AIR VENT ON 2ND FLOOR AT THE HIGHEST POINT OF SPRINKLER BRANCHLINE PIPING IN ACCORDANCE WITH NFPA 13.

2. SPRINKLER MAIN PIPING MUST NOT BE ROUTED THROUGH ELECTRICAL ROOMS. SPRINKLER PIPING AND SPRINKLER HEADS MUST NOT BE ROUTED OR INSTALLED OVER ELECTRICAL EQUIPMENT PER NFPA 70 ARTICLE 110.26(E)(1)(A). IN TELECOM ROOMS, PROVIDE DRIP TROUGHS BENEATH SPRINKLER HEADS/PIPING AND PROVIDE SPRINKLER GUARDS ON ALL SPRINKLER HEADS.

3. ALL EXTERIOR SPRINKLER PIPING OR PIPING EXPOSED TO WEATHER MUST BE COATED WITH MARINE GRADE EPOXY.

KEY PLAN

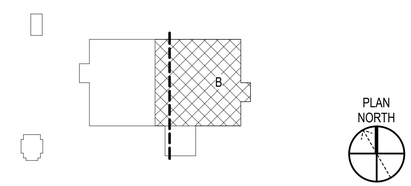

GRAPHIC SCALE(S)

3/32" =1'-0" 0' 6' 12' 18'

SYM	DESCRIPTION	DATE	APPR

JAY THOMAS HIGASHI, STATE OF WASHINGTON, 31715, REGISTERED PROFESSIONAL ENGINEER
01/22/2026
Expiration Date of the License SEAL

AE INFO

APPROVED
Evan Miyal
FOR COMMANDER NAVFAC

ACTIVITY
NATHANIEL PYRON, MILCON PLANNER, DPPH

SATISFACTORY TO DATE	3/10/2026		
DES JTH	DRW AM	CHK RTB	
PMDM	DKS/DMK		
BRANCH MANAGER	KYM		
CHIEF ENG/ARCH	KYM		
FIRE PROTECTION	RYO		

DEPARTMENT OF THE NAVY
NAVFAC PACIFIC
NAVAL FACILITIES ENGINEERING SYSTEMS COMMAND
NAVAL FACILITIES ENGINEERING SYSTEMS COMMAND – PACIFIC
MAKALAPA, HAWAII
U.S. NAVSUPPACT
MCB CAMP BLAZ, GUAM
JFY 2022 PROJECT J-875
BATTLE STAFF TRAINING FACILITY
ENLARGED FLOOR PLAN 1B - FIRE SPRINKLER

SCALE: AS NOTED
EPROJECT NO.: 1696746
CONSTR. CONTR. NO.
NAVFAC DRAWING NO. 17322025
SHEET 205 OF 468
FX402

DRAWFORM REVISION: 25 AUGUST 2020

FX402
3/11/2026 10:24:24 PM
P:\Hon\22Jobs\22771 J-875 Battle Staff Training\Revit\LOCAL\BLDG-J875-1696746-F-local.rvt

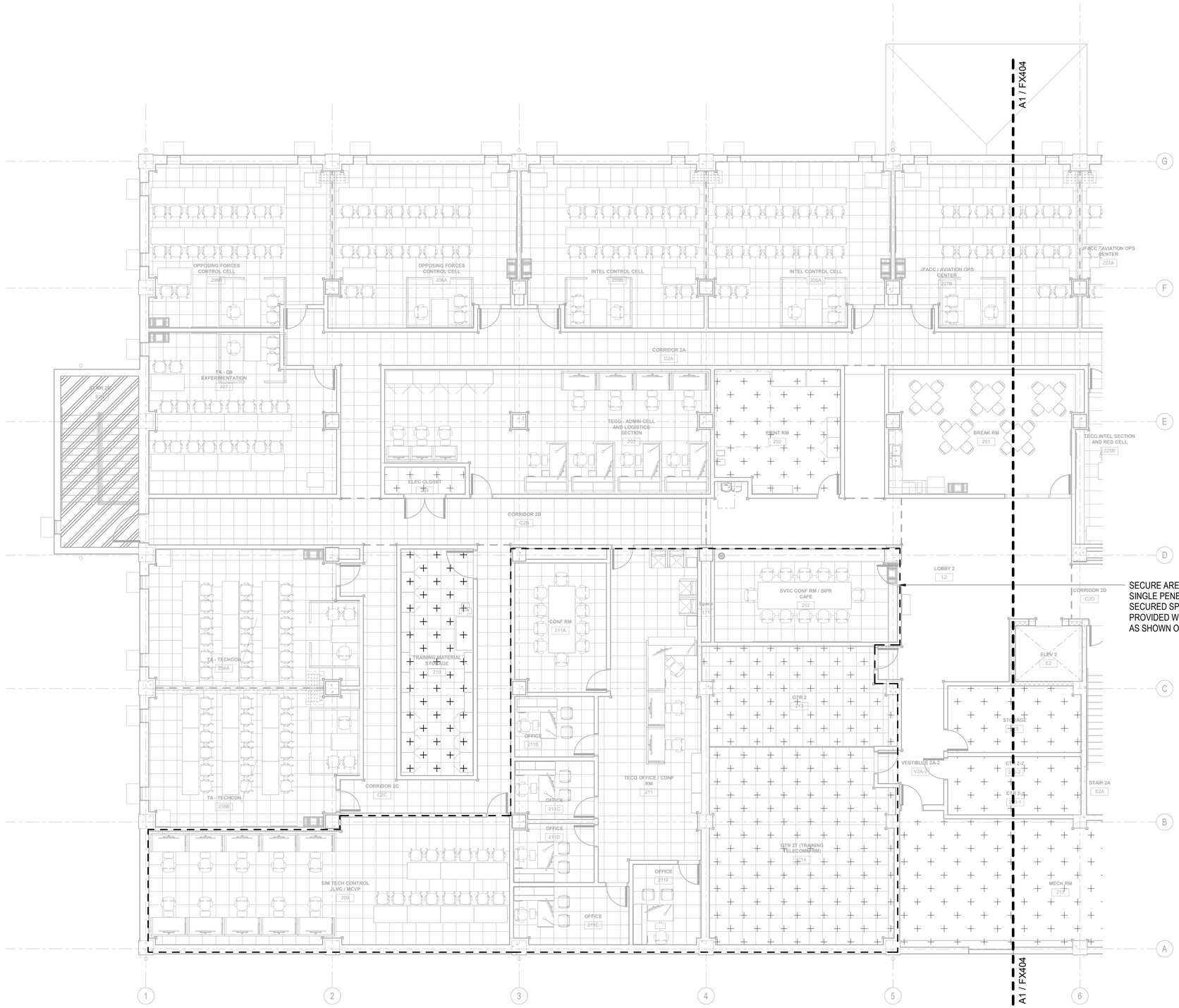

SECURE AREA BOUNDRY. PROVIDE ONLY SINGLE PENETRATION FOR PIPE INTO SECURED SPACE. PENETRATION MUST BE PROVIDED WITH DEIELETRIC UNION BREAK AS SHOWN ON DETAIL C2/FX501.

LEGEND FOR HAZARD GROUPS

SYMBOL	DESCRIPTION
	LIGHT HAZARD
	ORDINARY HAZARD
	PROVIDE SPRINKLER HEADS BENEATH THE FIRST LANDING AND AT THE TOP OF STAIRWELL. NO OTHER REQUIREMENTS FOR FIRE SPRINKLER COVERAGE.

GENERAL NOTES:

1. PROVIDE A SINGLE AIR VENT ON 2ND FLOOR AT THE HIGHEST POINT OF SPRINKLER BRANCHLINE PIPING IN ACCORDANCE WITH NFPA 13.

2. SPRINKLER MAIN PIPING MUST NOT BE ROUTED THROUGH ELECTRICAL ROOMS. SPRINKLER PIPING AND SPRINKLER HEADS MUST NOT BE ROUTED OR INSTALLED OVER ELECTRICAL EQUIPMENT PER NFPA 70 ARTICLE 110.26(E)(1)(A). IN TELECOM ROOMS, PROVIDE DRIP TROUGHS BENEATH SPRINKLER HEADS/PIPING AND PROVIDE SPRINKLER GUARDS ON ALL SPRINKLER HEADS.

3. ALL EXTERIOR SPRINKLER PIPING OR PIPING EXPOSED TO WEATHER MUST BE COATED WITH MARINE GRADE EPOXY.

KEY PLAN

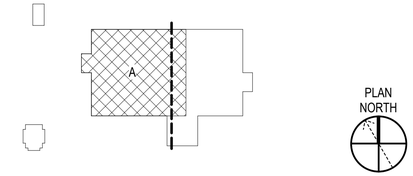

GRAPHIC SCALE(S)

1/8" =1'-0" 0' 4' 8' 16'

A1 ENLARGED FLOOR PLAN 2A - FIRE SPRINKLER

SCALE: 1/8" = 1'-0"

SYM	DESCRIPTION	DATE	APPR

NAVFAC

JAY THOMAS HIGASHI, STATE OF WASHINGTON, 31710, REGISTERED PROFESSIONAL ENGINEER
01/22/2026
Expiration Date of the License SEAL

ASMD LLC.
AE INFO

APPROVED
Evan Mizell
FOR COMMANDER NAVFAC

ACTIVITY
NATHANIEL PYRON, MILCON PLANNER, DPPH

SATISFACTORY TO DATE	3/10/2026
DES JTH	DRW AM / CHK RTB
PMDM	DKS/DMK
BRANCH MANAGER	KYM
CHIEF ENG/ARCH	KYM
FIRE PROTECTION	RYO

DEPARTMENT OF THE NAVY
NAVAL FACILITIES ENGINEERING SYSTEMS COMMAND
NAVFAC PACIFIC
U.S. NAVSUPPACT

NAVAL FACILITIES ENGINEERING SYSTEMS COMMAND ~ PACIFIC
MAKALAPA, HAWAII

MCB CAMP BLAZ, GUAM

JFY 2022 PROJECT J-875
BATTLE STAFF TRAINING FACILITY

ENLARGED FLOOR PLAN 2A - FIRE SPRINKLER

SCALE: AS NOTED
EPROJECT NO.: 1696746
CONSTR. CONTR. NO.
NAVFAC DRAWING NO. 17322026
SHEET 206 OF 468

FX403

DRAWFORM REVISION: 25 AUGUST 2020

3/11/2026 10:13:36 PM
P:\Horiz\2.Aloha\222771 J-875 Battle Staff Training\Revit\LOCAL\BLDG-J875-1696746-F-local.rvt
FX403

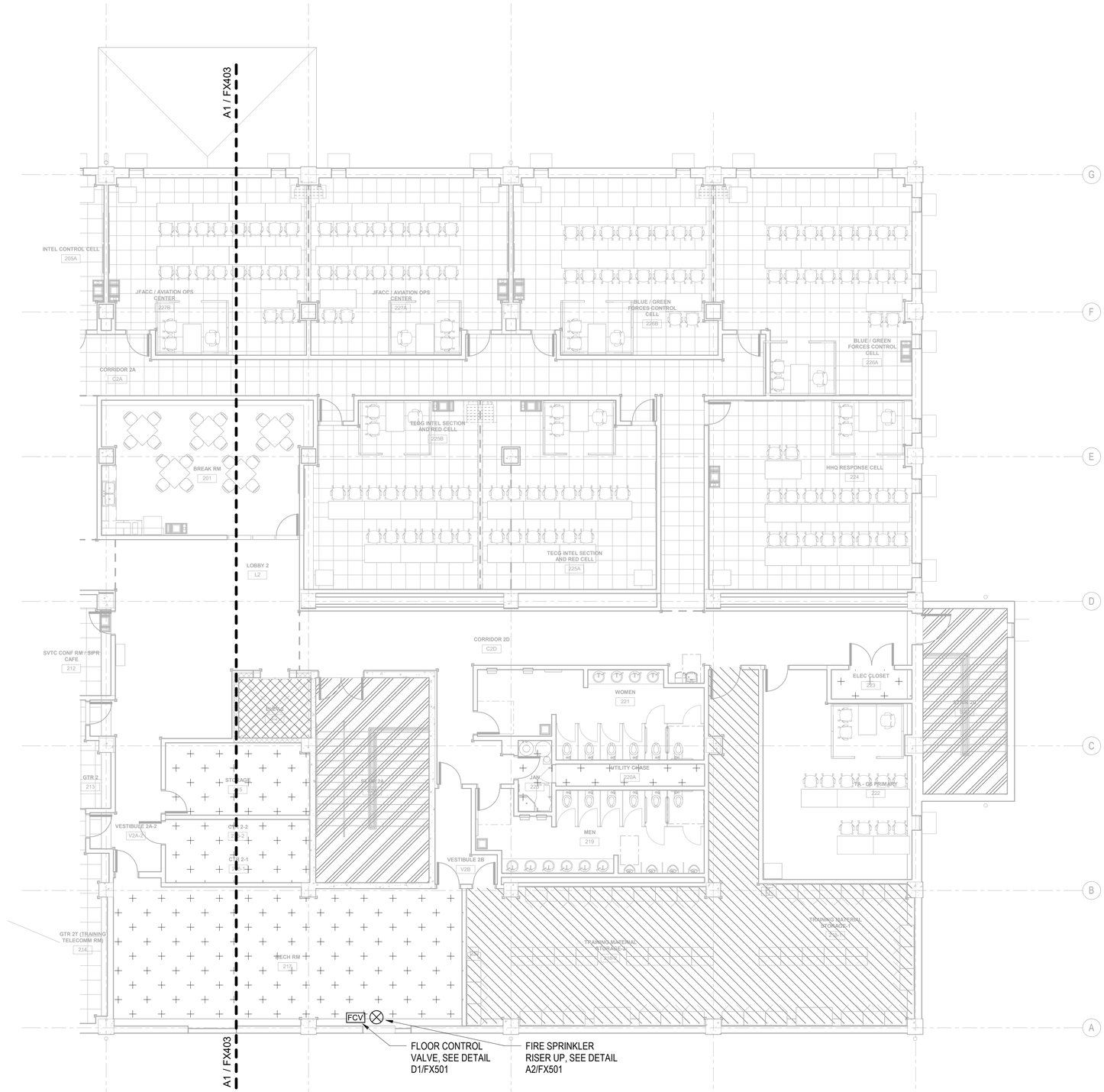

A1 ENLARGED FLOOR PLAN 2B - FIRE SPRINKLER

SCALE: 1/8" = 1'-0"

LEGEND FOR HAZARD GROUPS

SYMBOL	DESCRIPTION
	LIGHT HAZARD
	ORDINARY HAZARD
	EXTRA HAZARD GROUP 2
	PROVIDE SPRINKLER HEADS BENEATH THE FIRST LANDING AND AT THE TOP OF STAIRWELL. NO OTHER REQUIREMENTS FOR FIRE SPRINKLER COVERAGE.

GENERAL NOTES:

1. PROVIDE A SINGLE AIR VENT ON 2ND FLOOR AT THE HIGHEST POINT OF SPRINKLER BRANCHLINE PIPING IN ACCORDANCE WITH NFPA 13.

2. SPRINKLER MAIN PIPING MUST NOT BE ROUTED THROUGH ELECTRICAL ROOMS. SPRINKLER PIPING AND SPRINKLER HEADS MUST NOT BE ROUTED OR INSTALLED OVER ELECTRICAL EQUIPMENT PER NFPA 70 ARTICLE 110.26(E)(1)(A). IN TELECOM ROOMS, PROVIDE DRIP TROUGHS BENEATH SPRINKLER HEADS/PIPING AND PROVIDE SPRINKLER GUARDS ON ALL SPRINKLER HEADS.

3. ALL EXTERIOR SPRINKLER PIPING OR PIPING EXPOSED TO WEATHER MUST BE COATED WITH MARINE GRADE EPOXY.

KEY PLAN

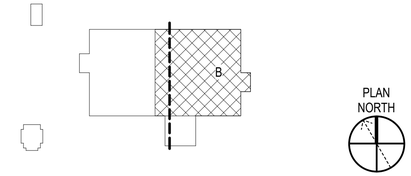

GRAPHIC SCALE(S)

1/8" =1'-0" 0' 4' 8' 16'

SYM	DESCRIPTION	DATE	APPR

NAVFAC

JAY THOMAS HIGASHI, STATE OF WASHINGTON, 31715, REGISTERED PROFESSIONAL ENGINEER
01/22/2026
Expiration Date of the License SEAL

ASMD LLC.
A/E INFO

APPROVED
Evan Mizel
FOR COMMANDER NAVFAC

ACTIVITY
NATHANIEL PYRON, MILCON PLANNER, DPPH

SATISFACTORY TO DATE 3/10/2026

DES	JTH	DRW AM	CHK RTB
PMDM			DKS/DMK
BRANCH MANAGER			KYM
CHIEF ENG/ARCH			KYM
FIRE PROTECTION			RYO

DEPARTMENT OF THE NAVY
NAVAL FACILITIES ENGINEERING SYSTEMS COMMAND
NAVFAC PACIFIC
U.S. NAVSUPPACT

NAVAL FACILITIES ENGINEERING SYSTEMS COMMAND ~ PACIFIC
MAKALAPA, HAWAII

MCB CAMP BLAZ, GUAM

JFY 2022 PROJECT J-875
BATTLE STAFF TRAINING FACILITY

ENLARGED FLOOR PLAN 2B - FIRE SPRINKLER

SCALE: AS NOTED
EPROJECT NO.: 1696746
CONSTR. CONTR. NO.
NAVFAC DRAWING NO. 17322027
SHEET 207 OF 468
FX404

DRAWFORM REVISION: 25 AUGUST 2020

FX404
3/11/2026 10:13:39 PM
P:\Horn22Jobs\22771 J-875 Battle Staff Training\Revit\LOCAL\BLDG-J875-1696746-F-local.rvt

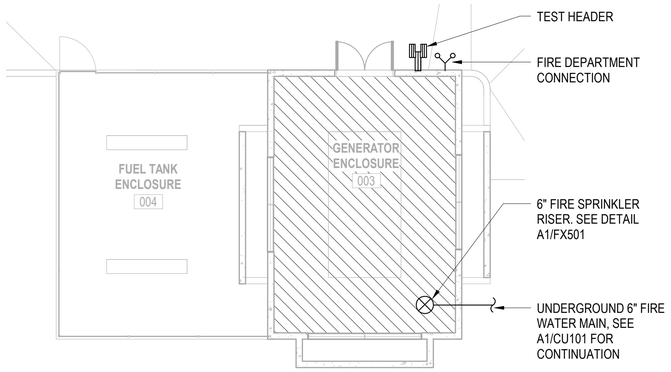

C1 ENLARGED UTILITY BUILDING FLOOR PLAN - FIRE SPRINKLER

SCALE: 1/8" = 1'-0"

LEGEND FOR HAZARD GROUPS

SYMBOL	DESCRIPTION
	NFPA 37, SECTION 11.4.5.1

GENERAL NOTES:

1. PROVIDE A SINGLE AIR VENT AT THE HIGHEST POINT OF SPRINKLER BRANCHLINE PIPING IN ACCORDANCE WITH NFPA 13.

KEY PLAN

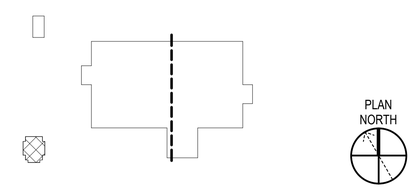

GRAPHIC SCALE(S)

1/8" =1'-0" 0' 4' 8' 16'

SYM	DESCRIPTION	DATE	APPR

NAVFAC

JAY THOMAS HIGASHI, STATE OF WASHINGTON, 31710, REGISTERED PROFESSIONAL ENGINEER
01/22/2026
Expiration Date of the License SEAL

AE INFO

APPROVED
Evan Mizel
FOR COMMANDER NAVFAC

ACTIVITY
NATHANIEL PYRON, MILCON PLANNER, DPPH

SATISFACTORY TO DATE 3/10/2026

DES	JTH	DRW	AM	CHK	RTB

PMDM	DKS/DMK
BRANCH MANAGER	KYM
CHIEF ENG/ARCH	KYM
FIRE PROTECTION	RYO

DEPARTMENT OF THE NAVY
NAVAL FACILITIES ENGINEERING SYSTEMS COMMAND ~ PACIFIC
NAVFAC PACIFIC
U.S. NAVSUPPACT
NAVAL FACILITIES ENGINEERING SYSTEMS COMMAND
MAKALAPA, HAWAII
MCB CAMP BLAZ, GUAM
JFY 2022 PROJECT J-875
BATTLE STAFF TRAINING FACILITY
ENLARGED UTILITY BUILDING FLOOR PLAN - FIRE SPRINKLER

SCALE:	AS NOTED
EPROJECT NO.:	1696746
CONSTR. CONTR. NO.	
NAVFAC DRAWING NO.	17322028
SHEET	208 OF 468

FX405

DRAWFORM REVISION: 25 AUGUST 2020

3/11/2026 10:13:43 PM FX405
P:\Horn22Jobs\22771 J-875 Battle Staff Training\Revit\LOCAL\BLDG-J875-1696746-F-local.rvt

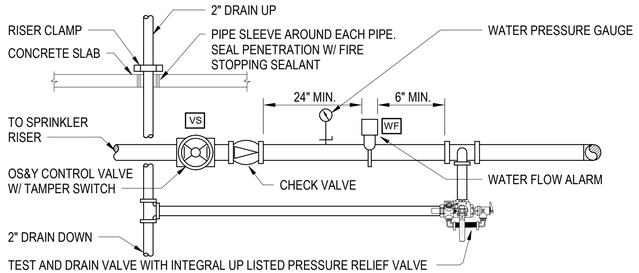

TEST AND DRAIN VALVE WITH INTEGRAL UP LISTED PRESSURE RELIEF VALVE ABOVE THE RISER CHECK VALVES. RELIEF VALVE MUST BE FACTORY SET TO 175 PSI AND MUST OPERATE TO THE OPEN POSITION BETWEEN 90% AND 105% OF THE SET PRESSURE. RELIEF VALVE MUST RESEAT OR CLOSE AT A MINIMUM OF 80% OF THE SET PRESSURE. PRESSURE RELIEF VALVES MUST DISCHARGE INTO THE DRAIN MANIFOLD.

D1 FLOOR CONTROL VALVE DETAIL

SCALE: NTS

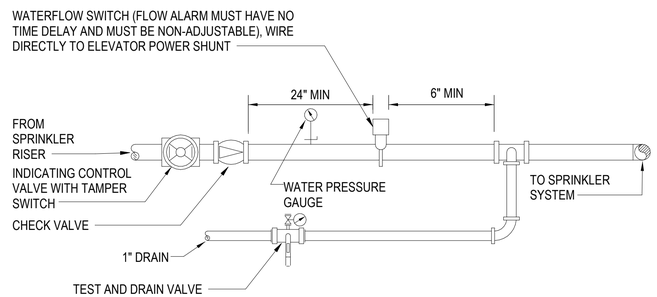

C1 ELEVATOR CONTROL VALVE

SCALE: NTS

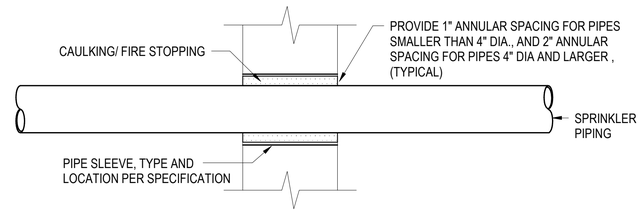

PIPE PENETRTING NON-SECURED SPACES

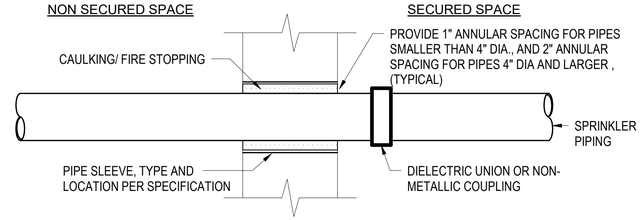

PIPE PENETRATING A SECURED SPACES

C2 PIPE PENETRATION DETAIL

SCALE: NTS

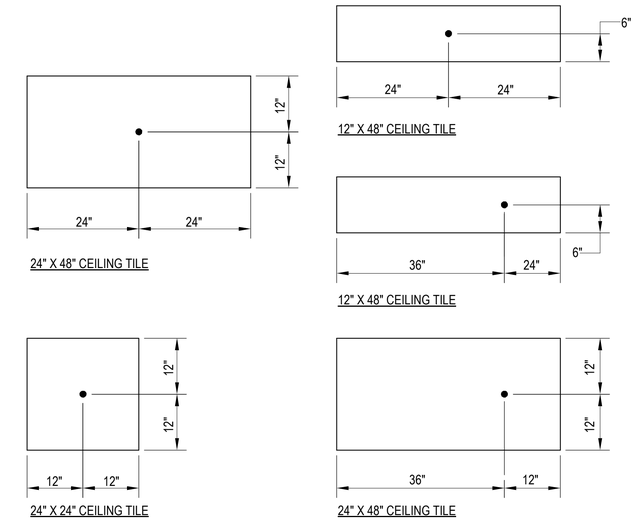

C4 TYPICAL FIRE SPRINKLER MOUNTING DETAIL

SCALE: NOT TO SCALE

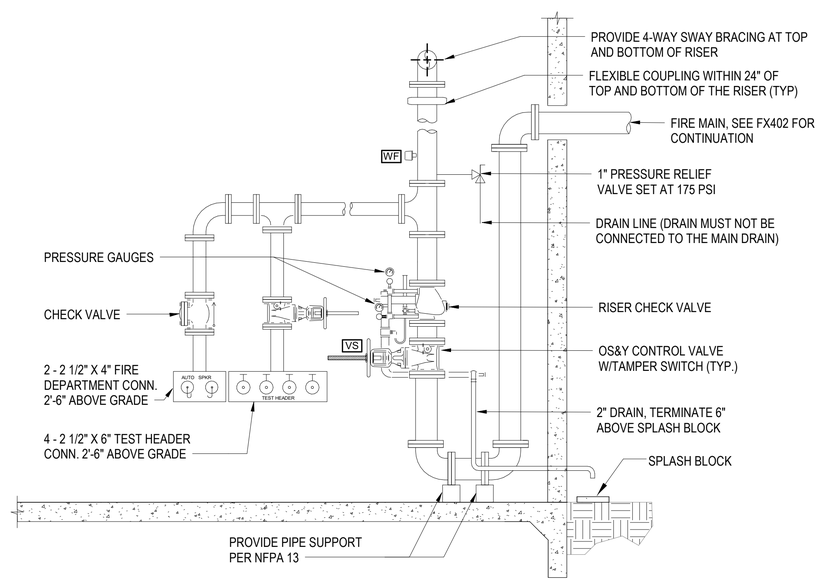

A2 MAIN BUILDING WET SPRINKLER RISER DETAIL

SCALE: NTS

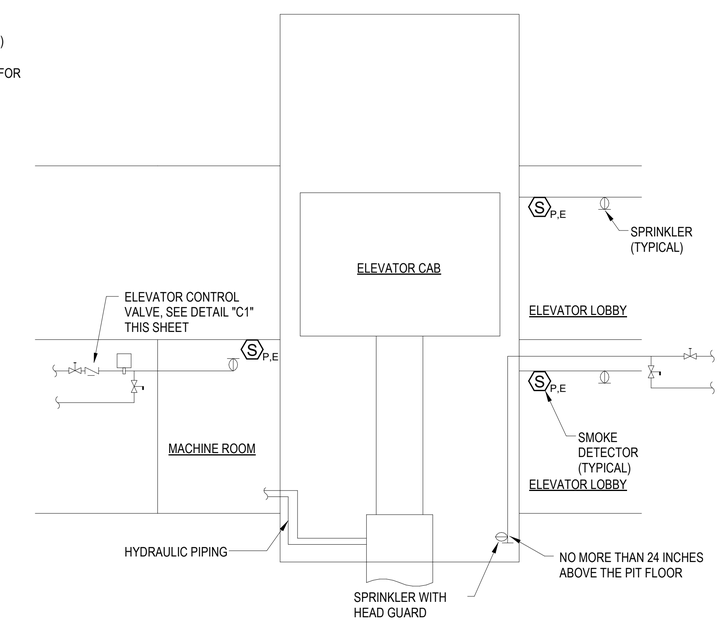

A4 HYDRAULIC ELEVATOR DETAIL

SCALE: NTS

SYM	DESCRIPTION	DATE	APPR

NAVFAC

JAY THOMAS HIGASHI, STATE OF WASHINGTON, 31715, REGISTERED PROFESSIONAL ENGINEER
01/22/2026
Expiration Date of the License SEAL

ASMD LLC.
A/E INFO

APPROVED
Evan Mizuno
FOR COMMANDER NAVFAC

ACTIVITY: NATHANIEL PYRON, MILCON PLANNER, DPPH
SATISFACTORY TO DATE: 3/10/2026
DES: JTH | DRW: AM | CHK: RTB
PM/DM: DKS/DMK
BRANCH MANAGER: KYM
CHIEF ENG/ARCH: KYM
FIRE PROTECTION: RYO

DEPARTMENT OF THE NAVY
NAVFAC PACIFIC
U.S. NAVSUPPACT
NAVAL FACILITIES ENGINEERING SYSTEMS COMMAND
NAVAL FACILITIES ENGINEERING SYSTEMS COMMAND – PACIFIC
MAKALAPA, HAWAII
MCB CAMP BLAZ, GUAM
JFY 2022 PROJECT J-875
BATTLE STAFF TRAINING FACILITY
FIRE SPRINKLER DETAILS

SCALE: AS NOTED
EPROJECT NO.: 1696746
CONSTR. CONTR. NO.
NAVFAC DRAWING NO. 17322029
SHEET 209 OF 468
FX501

DRAWFORM REVISION: 25 AUGUST 2020

3/11/2026 9:38:43 PM FX501
P:\Work\2026\222771 J-875 Battle Staff Training\Revit\LOCAL\BLDG-J875-1696746-F-local.rvt

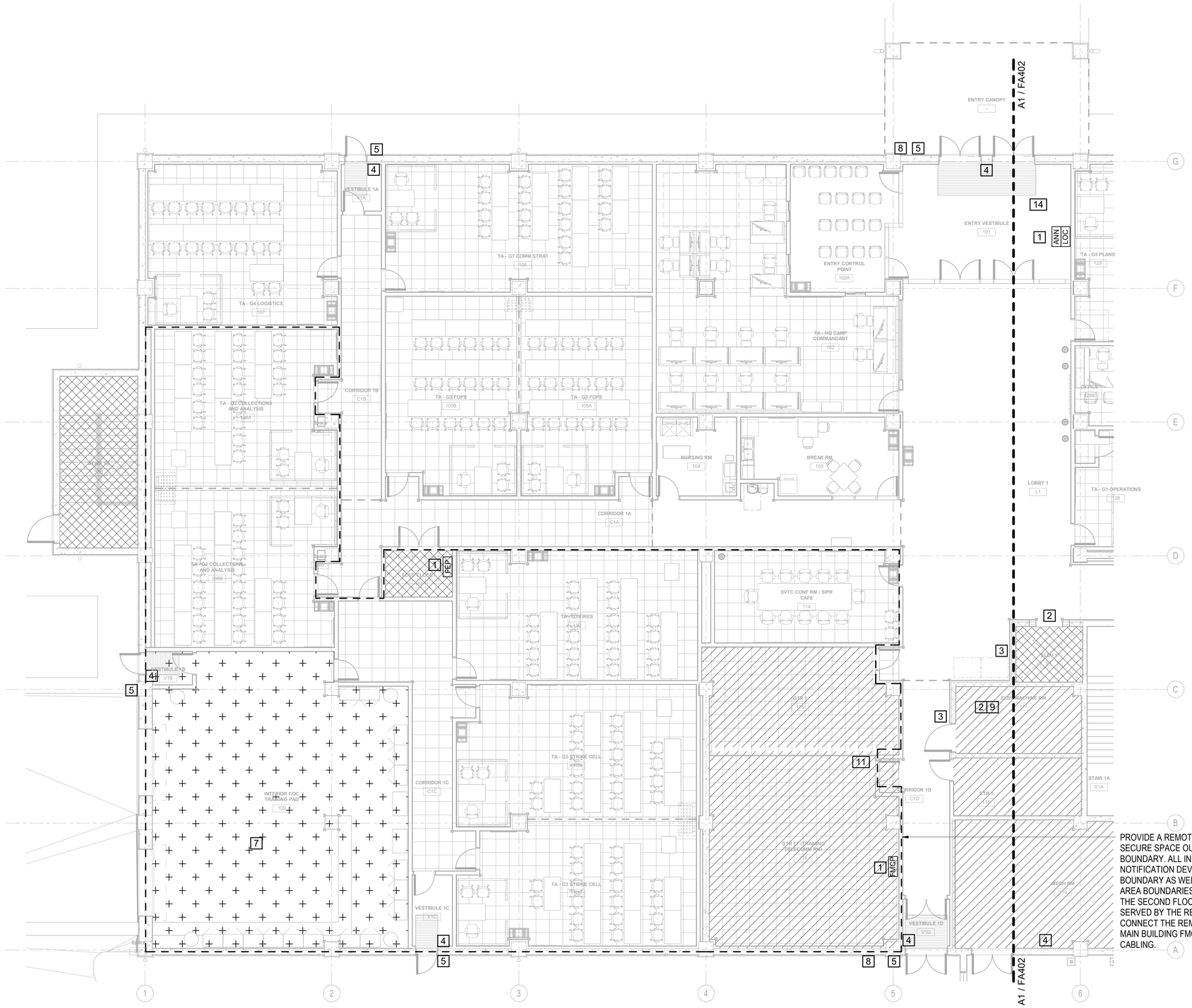

PROVIDE A REMOTE FMCP FOR THE SECURE SPACE OUTLINED BY THIS BOUNDARY. ALL INITIATING AND NOTIFICATION DEVICES WITHIN THIS BOUNDARY AS WELL AS THE SECURE AREA BOUNDARIES INDICATED ON THE SECOND FLOOR MUST BE SERVED BY THE REMOTE FMCP. CONNECT THE REMOTE FMCP TO THE MAIN BUILDING FMCP VIA FIBER OPTIC CABLING.

A1 ENLARGED FLOOR PLAN 1A - FIRE ALARM-MASS NOTIFICATION SYSTEM

SCALE: 1/8" = 1'-0"

NOTE: PROVIDE TAMPER SWITCHES TO MONITOR THE TWO OS&Y CONTROL VALVES ON EACH FIRE SPRINKLER BACKFLOW PREVENTER PER UFC 3-600-01, 9-7.10.7, TOTAL FOUR TAMPER SWITCHES.

FIRE ALARM AREA DESIGN REQUIREMENT SCHEDULE

SYMBOL	LOCATION	DESCRIPTION
	N/A	FIRE ALARM NOTIFICATION DEVICES NOT REQUIRED
	CEILING OR WALL	PROVIDE CLEAR LENS SPEAKER/STROBES MARKED WITH "ALERT" THROUGHOUT AREA TO ACHIEVE DESIGN CRITERIA
	CEILING OR WALL	SPACE WITH HARD WALL AND CEILING SURFACES. PROVIDE CLEAR LENS SPEAKER/STROBE MARKED WITH "ALERT" THROUGHOUT AREA. OCCUPANTS MUST WALK NO MORE THAN 33 FT TO FIND A LOCATION WITH AT LEAST THE MINIMUM REQUIRED CIS VALUE WITHIN THE SAME AREA IN ACCORDANCE WITH UFC 4-021-01, 4-6.1.2.
	CEILING OR WALL	SPACE WITH HARD WALL AND CEILING SURFACES AND AN AREA LESS THAN 900 SF. OCCUPANTS MUST WALK NO MORE THAN 33 FT TO FIND A LOCATION WITH AT LEAST THE MINIMUM REQUIRED CIS VALUE WITHIN THE SAME AREA IN ACCORDANCE WITH UFC 4-021-01, 4.6.1.2. VISUAL NOTIFICATION IS NOT REQUIRED PER UFC 3-600-01, 9-18.6.3. PROVIDE SPEAKERS MARKED WITH "ALERT" THROUGHOUT AREA.

NOTE: REFER TO SPECIFICATION SECTION 28 31 76 FOR DESIGN CRITERIA TO BE INCORPORATED.

KEY NOTES:

1. PROVIDE SMOKE DETECTION AT CONTROL UNITS AND NOTIFICATION APPLIANCE CIRCUIT POWER EXTENDER LOCATIONS IN ACCORDANCE WITH NFPA 72.
2. PROVIDE SMOKE DETECTOR FOR ELEVATOR RECALL FUNCTIONS PER UFC 3-490-06.
3. PROVIDE INTERFACE COMPONENTS FOR MONITORING OF THE SPRINKLER SYSTEM TAMPER AND/OR WATERFLOW SWITCHES PER UFC 3-600-01.
4. PROVIDE MANUAL PULL STATIONS AT EXITS IN ACCORDANCE WITH NFPA 72.
5. PROVIDE WEATHERPROOF SPEAKERS MOUNTED ON THE EXTERIOR OF THE BUILDING PER UFC 4-021-01.
6. PROVIDE DUCT SMOKE DETECTION FOR AIR HANDLER SHUTDOWN IN ACCORDANCE WITH NFPA 90A.
7. PROVIDE CARBON MONOXIDE DETECTION IN VEHICLE PARKING SPACES AND SPACES WITH COMBUSTIBLE FUEL BURNING EQUIPMENT PER UFC 3-600-01.
8. PROVIDE INTERFACE COMPONENTS FOR MONITORING OF THE KNOX BOX TAMPER SWITCH.
9. PROVIDE INTERFACE COMPONENTS FOR THE ELEVATOR CONTROLLER. THE FOLLOWING OUTPUTS MUST BE PROVIDED:
   1. RECALL ELEVATOR TO PRIMARY FLOOR
   2. RECALL ELEVATOR TO ALTERNATE FLOOR
   3. ELEVATOR CAB ANNUNCIATOR STEADY ON
   4. ELEVATOR CAB ANNUNCIATOR BLINKING
   5. ELEVATOR POWER SHUNT TRIP
11. PROVIDE INTERFACE COMPONENTS TO SILENCE THE PA SYSTEM DURING A FIRE ALARM CONDITION OR A MASS NOTIFICATION BROADCAST.
13. PROVIDE INTERFACE COMPONENTS TO SILENCE THE AUDITORIUM SOUND SYSTEM DURING A FIRE ALARM CONDITION OR A MASS NOTIFICATION BROADCAST.
14. PROVIDE INTERFACE COMPONENT TO MONITOR AREA OF RESCUE ASSISTANCE SYSTEM.

KEY PLAN

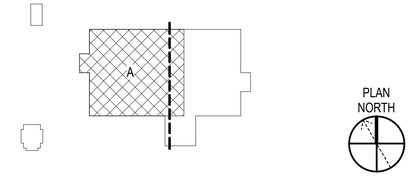

GRAPHIC SCALE(S)

1/8" =1'-0" 0' 4' 8' 16'

SYM	DESCRIPTION	DATE	APPR

NAVFAC

JAY THOMAS HIGASHI, STATE OF WASHINGTON, 31715, REGISTERED PROFESSIONAL ENGINEER, 01/22/2026, Expiration Date of the License, SEAL

ASMD LLC. AE INFO

APPROVED Evan Miyazaki, FOR COMMANDER NAVFAC

ACTIVITY: NATHANIEL PYRON, MILCON PLANNER, DPPH

SATISFACTORY TO DATE 3/10/2026

DES JTH | DRW AM | CHK RTB

PMDM DKS/DMK

BRANCH MANAGER KYM

CHIEF ENG/ARCH KYM

FIRE PROTECTION RYO

DEPARTMENT OF THE NAVY
NAVAL FACILITIES ENGINEERING SYSTEMS COMMAND
NAVFAC PACIFIC
U.S. NAVSUPPACT

NAVAL FACILITIES ENGINEERING SYSTEMS COMMAND ~ PACIFIC
MAKALAPA, HAWAII

MCB CAMP BLAZ, GUAM

JFY 2022 PROJECT J-875
BATTLE STAFF TRAINING FACILITY

ENLARGED FLOOR PLAN 1A - FIRE ALARM-MASS NOTIFICATION SYSTEM

SCALE: AS NOTED

EPROJECT NO.: 1696746

CONSTR. CONTR. NO.

NAVFAC DRAWING NO. 17322030

SHEET 210 OF 468

FA401

DRAWFORM REVISION: 25 AUGUST 2020

3/11/2026 10:13:11 PM FA401
P:\Horiz\22Jobs\222771 J-875 Battle Staff Training\Revit\LOCAL\BLDG-J875-1696746-F-local.rvt

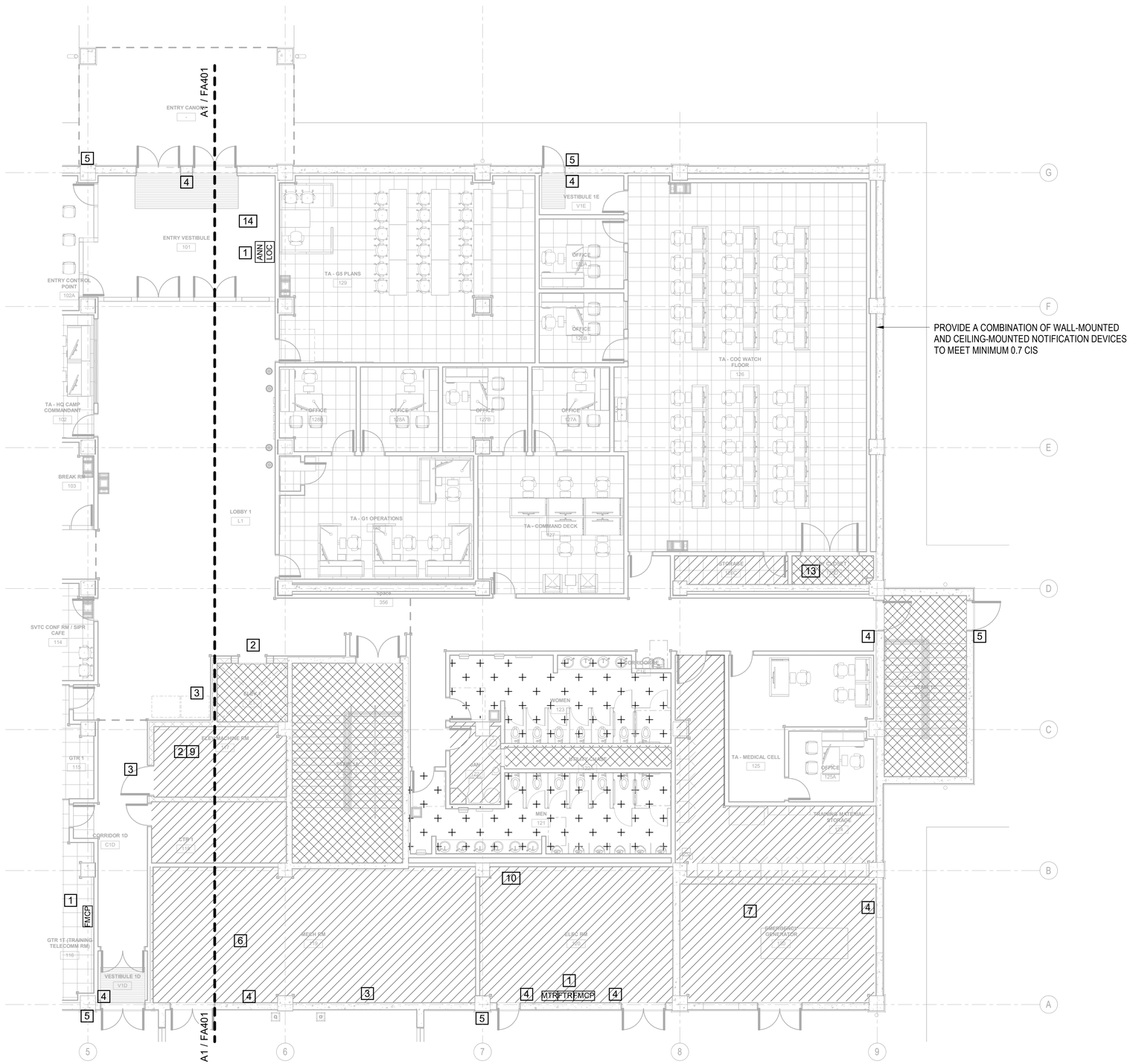

PROVIDE A COMBINATION OF WALL-MOUNTED AND CEILING-MOUNTED NOTIFICATION DEVICES TO MEET MINIMUM 0.7 CIS

FIRE ALARM AREA DESIGN REQUIREMENT SCHEDULE

SYMBOL	LOCATION	DESCRIPTION
	N/A	FIRE ALARM NOTIFICATION DEVICES NOT REQUIRED
	CEILING OR WALL	PROVIDE CLEAR LENS SPEAKER/STROBES MARKED WITH "ALERT" THROUGHOUT AREA TO ACHIEVE DESIGN CRITERIA
	CEILING OR WALL	SPACE WITH HARD WALL AND CEILING SURFACES. PROVIDE CLEAR LENS SPEAKER/STROBE MARKED WITH "ALERT" THROUGHOUT AREA. OCCUPANTS MUST WALK NO MORE THAN 33 FT TO FIND A LOCATION WITH AT LEAST THE MINIMUM REQUIRED CIS VALUE WITHIN THE SAME AREA IN ACCORDANCE WITH UFC 4-021-01, 4-6.1.2.
	CEILING OR WALL	SPACE WITH HARD WALL AND CEILING SURFACES AND AN AREA LESS THAN 900 SF. OCCUPANTS MUST WALK NO MORE THAN 33 FT TO FIND A LOCATION WITH AT LEAST THE MINIMUM REQUIRED CIS VALUE WITHIN THE SAME AREA IN ACCORDANCE WITH UFC 4-021-01, 4.6.1.2. VISUAL NOTIFICATION IS NOT REQUIRED PER UFC 3-600-01, 9-18.6.3. PROVIDE SPEAKERS MARKED WITH "ALERT" THROUGHOUT AREA.

NOTE: REFER TO SPECIFICATION SECTION 28 31 76 FOR DESIGN CRITERIA TO BE INCORPORATED.

KEY NOTES:

1. PROVIDE SMOKE DETECTION AT CONTROL UNITS AND NOTIFICATION APPLIANCE CIRCUIT POWER EXTENDER LOCATIONS IN ACCORDANCE WITH NFPA 72.
2. PROVIDE SMOKE DETECTOR FOR ELEVATOR RECALL FUNCTIONS PER UFC 3-490-06.
3. PROVIDE INTERFACE COMPONENTS FOR MONITORING OF THE SPRINKLER SYSTEM TAMPER AND/OR WATERFLOW SWITCHES PER UFC 3-600-01.
4. PROVIDE MANUAL PULL STATIONS AT EXITS IN ACCORDANCE WITH NFPA 72.
5. PROVIDE WEATHERPROOF SPEAKERS MOUNTED ON THE EXTERIOR OF THE BUILDING PER UFC 4-021-01.
6. PROVIDE DUCT SMOKE DETECTION FOR AIR HANDLER SHUTDOWN IN ACCORDANCE WITH NFPA 90A.
7. PROVIDE CARBON MONOXIDE DETECTION IN VEHICLE PARKING SPACES AND SPACES WITH COMBUSTIBLE FUEL BURNING EQUIPMENT PER UFC 3-600-01.
8. PROVIDE INTERFACE COMPONENTS FOR MONITORING OF THE KNOX BOX TAMPER SWITCH.
9. PROVIDE INTERFACE COMPONENTS FOR THE ELEVATOR CONTROLLER. THE FOLLOWING OUTPUTS MUST BE PROVIDED:
   1. RECALL ELEVATOR TO PRIMARY FLOOR
   2. RECALL ELEVATOR TO ALTERNATE FLOOR
   3. ELEVATOR CAB ANNUNCIATOR STEADY ON
   4. ELEVATOR CAB ANNUNCIATOR BLINKING
   5. ELEVATOR POWER SHUNT TRIP
10. PROVIDE INTERFACE COMPONENTS TO OVERRIDE THE LIGHTING CONTROL SYSTEM TO TURN ON THE LIGHTS DURING A FIRE ALARM CONDITION IN ACCORDANCE WITH NFPA 101.
13. PROVIDE INTERFACE COMPONENTS TO SILENCE THE TA - COC WATCH FLOOR SOUND SYSTEM DURING A FIRE ALARM CONDITION OR A MASS NOTIFICATION BROADCAST.
14. PROVIDE INTERFACE COMPONENT TO MONITOR AREA OF RESCUE ASSISTANCE SYSTEM.

KEY PLAN

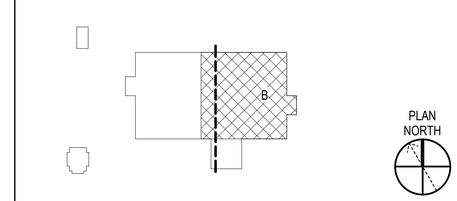

GRAPHIC SCALE(S)

1/8" =1'-0" 0' 4' 8' 16'

A1 ENLARGED FLOOR PLAN 1B - FIRE ALARM-MASS NOTIFICATION SYSTEM

SCALE: 1/8" = 1'-0"

NOTE: PROVIDE TAMPER SWITCHES TO MONITOR THE TWO OS&Y CONTROL VALVES ON THE FIRE SPRINKLER BACKFLOW PREVENTER PER UFC 3-600-01, 9-7.10.7, SEE A1/G101 FOR LOCATION OF BACKFLOW PREVENTER.

SYM	DESCRIPTION	DATE	APPR

NAVFAC

JAY THOMAS HIGASHI, STATE OF WASHINGTON, 31715, REGISTERED PROFESSIONAL ENGINEER, 01/22/2026, Expiration Date of the License, SEAL

AS MD L.L.C. A/E INFO

APPROVED
Evan Miyal
FOR COMMANDER NAVFAC

ACTIVITY
NATHANIEL PYRON, MILCON PLANNER, DPPH

SATISFACTORY TO DATE 3/10/2026

DES JTH DRW AM CHK RTB

PM/DM DKS/DMK

BRANCH MANAGER KYM

CHIEF ENG/ARCH KYM

FIRE PROTECTION RYO

DEPARTMENT OF THE NAVY
NAVAL FACILITIES ENGINEERING SYSTEMS COMMAND
NAVFAC PACIFIC
U.S. NAVSUPPACT

NAVAL FACILITIES ENGINEERING SYSTEMS COMMAND – PACIFIC
MAKALAPA, HAWAII

MCB CAMP BLAZ, GUAM

JFY 2022 PROJECT J-875
BATTLE STAFF TRAINING FACILITY

ENLARGED FLOOR PLAN 1B - FIRE ALARM-MASS NOTIFICATION SYSTEM

SCALE: AS NOTED

EPROJECT NO.: 1696746

CONSTR. CONTR. NO.

NAVFAC DRAWING NO. 17322031

SHEET 211 OF 468

FA402

DRAWFORM REVISION: 25 AUGUST 2020

3/11/2026 10:13:15 PM FA402
P:\Home22\dke22277\ J-875 Battle Staff Training\Revit\LOCAL\BLDG-J875-1696746-F-local.rvt

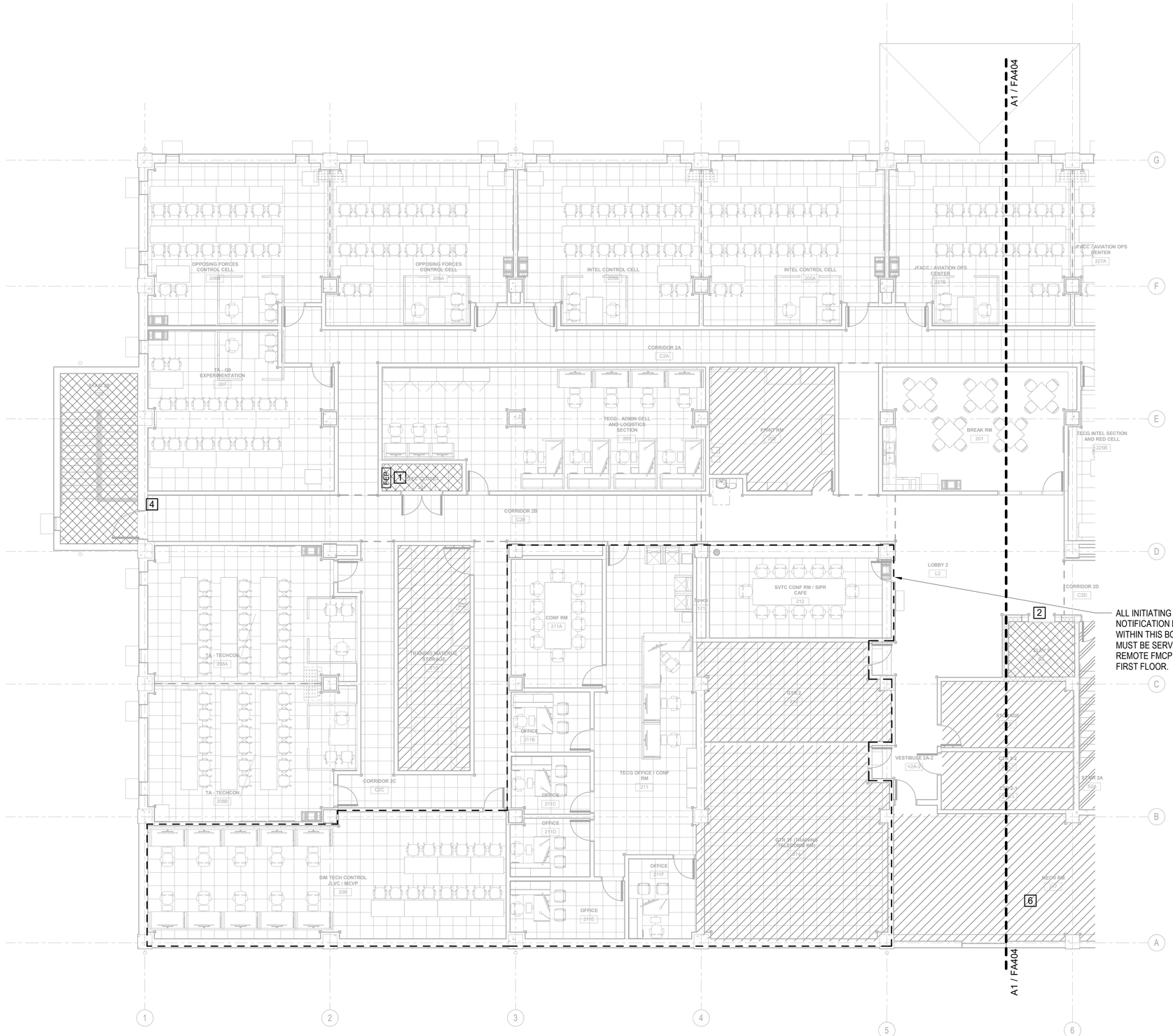

ALL INITIATING AND NOTIFICATION DEVICES WITHIN THIS BOUNDARY MUST BE SERVED BY THE REMOTE FMCP ON THE FIRST FLOOR.

FIRE ALARM AREA DESIGN REQUIREMENT SCHEDULE

SYMBOL	LOCATION	DESCRIPTION
	N/A	FIRE ALARM NOTIFICATION DEVICES NOT REQUIRED
	CEILING OR WALL	PROVIDE CLEAR LENS SPEAKER/STROBES MARKED WITH "ALERT" THROUGHOUT AREA TO ACHIEVE DESIGN CRITERIA
	CEILING OR WALL	SPACE WITH HARD WALL AND CEILING SURFACES. PROVIDE CLEAR LENS SPEAKER/STROBE MARKED WITH "ALERT" THROUGHOUT AREA. OCCUPANTS MUST WALK NO MORE THAN 33 FT TO FIND A LOCATION WITH AT LEAST THE MINIMUM REQUIRED CIS VALUE WITHIN THE SAME AREA IN ACCORDANCE WITH UFC 4-021-01, 4-6.1.2.
	CEILING OR WALL	SPACE WITH HARD WALL AND CEILING SURFACES AND AN AREA LESS THAN 900 SF. OCCUPANTS MUST WALK NO MORE THAN 33 FT TO FIND A LOCATION WITH AT LEAST THE MINIMUM REQUIRED CIS VALUE WITHIN THE SAME AREA IN ACCORDANCE WITH UFC 4-021-01, 4.6.1.2. VISUAL NOTIFICATION IS NOT REQUIRED PER UFC 3-600-01, 9-18.6.3. PROVIDE SPEAKERS MARKED WITH "ALERT" THROUGHOUT AREA.

NOTE: REFER TO SPECIFICATION SECTION 28 31 76 FOR DESIGN CRITERIA TO BE INCORPORATED.

KEY NOTES:

1. PROVIDE SMOKE DETECTION AT CONTROL UNITS AND NOTIFICATION APPLIANCE CIRCUIT POWER EXTENDER LOCATIONS IN ACCORDANCE WITH NFPA 72.
2. PROVIDE SMOKE DETECTOR FOR ELEVATOR RECALL FUNCTIONS PER UFC 3-490-06.
4. PROVIDE MANUAL PULL STATIONS AT EXITS IN ACCORDANCE WITH NFPA 72.
6. PROVIDE DUCT SMOKE DETECTION FOR AIR HANDLER SHUTDOWN IN ACCORDANCE WITH NFPA 90A.

KEY PLAN

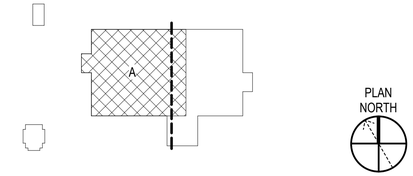

GRAPHIC SCALE(S)

1/8" =1'-0" 0' 4' 8' 16'

A1 ENLARGED FLOOR PLAN 2A - FIRE ALARM-MASS NOTIFICATION SYSTEM

SCALE: 1/8" = 1'-0"

SYM	DESCRIPTION	DATE	APPR

NAVFAC

JAY THOMAS HIGASHI, STATE OF WASHINGTON, 31715, REGISTERED PROFESSIONAL ENGINEER
01/22/2026
Expiration Date of the License SEAL

ASMD LLC.
AE INFO

APPROVED
Evan Miyazaki
FOR COMMANDER NAVFAC

ACTIVITY
NATHANIEL PYRON, MILCON PLANNER, DPPH

SATISFACTORY TO DATE 3/10/2026

DES	JTH	DRW	AM	CHK	RTB
PMDM	DKS/DMK				
BRANCH MANAGER	KYM				
CHIEF ENG/ARCH	KYM				
FIRE PROTECTION	RYO				

DEPARTMENT OF THE NAVY
NAVAL FACILITIES ENGINEERING SYSTEMS COMMAND
NAVFAC PACIFIC
U.S. NAVSUPPACT

NAVAL FACILITIES ENGINEERING SYSTEMS COMMAND – PACIFIC
MAKALAPA, HAWAII

MCB CAMP BLAZ, GUAM

JFY 2022 PROJECT J-875
BATTLE STAFF TRAINING FACILITY

ENLARGED FLOOR PLAN 2A - FIRE ALARM-MASS NOTIFICATION SYSTEM

SCALE: AS NOTED
EPROJECT NO.: 1696746
CONSTR. CONTR. NO.
NAVFAC DRAWING NO. 17322032
SHEET 212 OF 468

FA403

DRAWFORM REVISION: 25 AUGUST 2020

3/11/2026 10:13:18 PM FA403
P:\Horizz\Jobs\22771 J-875 Battle Staff Training\Revit\LOCAL\BLDG-J875-1696746-F-local.rvt

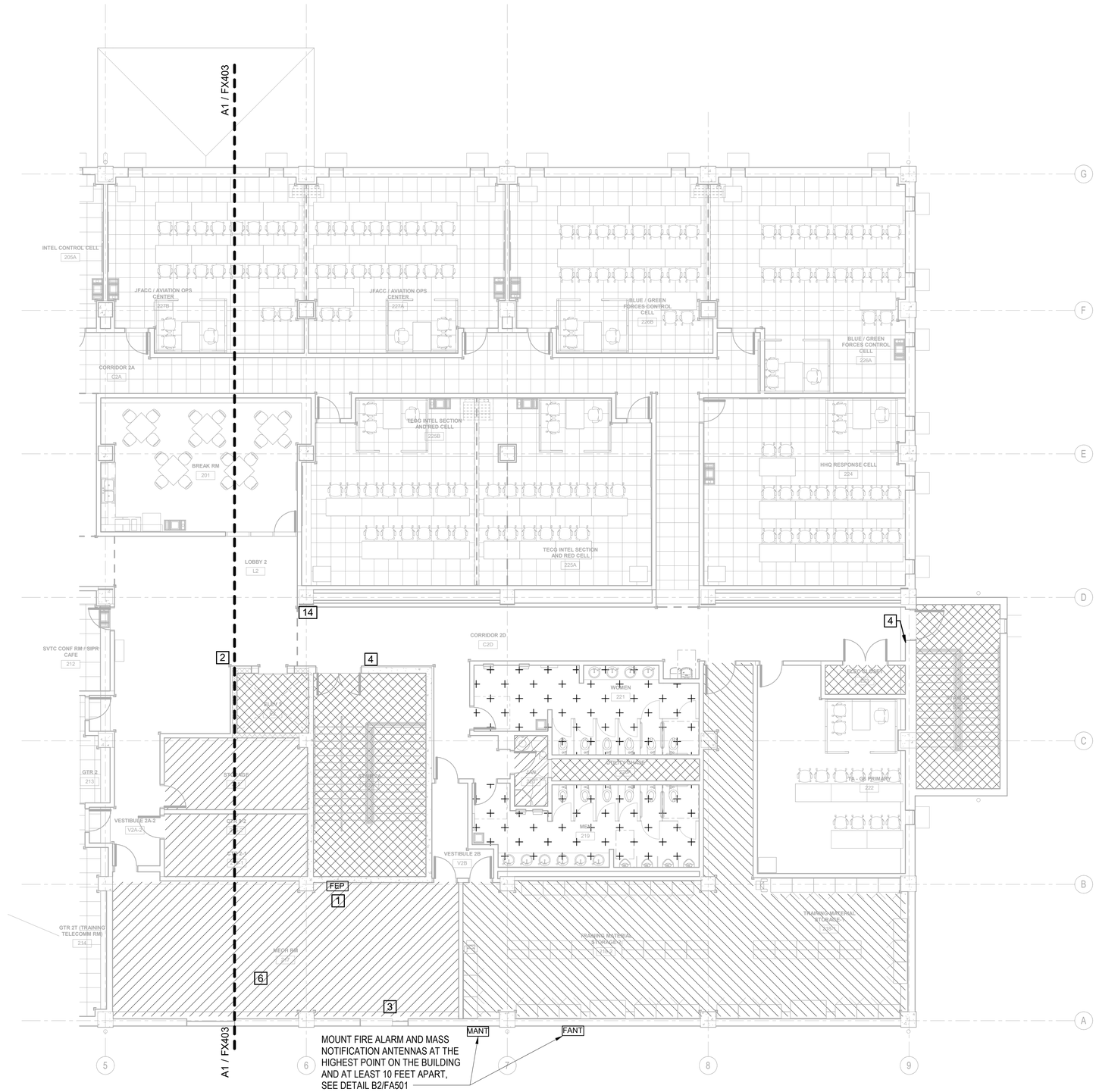

A1 ENLARGED FLOOR PLAN 2B - FIRE ALARM-MASS NOTIFICATION SYSTEM

SCALE: 1/8" = 1'-0"

FIRE ALARM AREA DESIGN REQUIREMENT SCHEDULE

SYMBOL	LOCATION	DESCRIPTION
	N/A	FIRE ALARM NOTIFICATION DEVICES NOT REQUIRED
	CEILING OR WALL	PROVIDE CLEAR LENS SPEAKER/STROBES MARKED WITH "ALERT" THROUGHOUT AREA TO ACHIEVE DESIGN CRITERIA
	CEILING OR WALL	SPACE WITH HARD WALL AND CEILING SURFACES. PROVIDE CLEAR LENS SPEAKER/STROBE MARKED WITH "ALERT" THROUGHOUT AREA. OCCUPANTS MUST WALK NO MORE THAN 33 FT TO FIND A LOCATION WITH AT LEAST THE MINIMUM REQUIRED CIS VALUE WITHIN THE SAME AREA IN ACCORDANCE WITH UFC 4-021-01, 4-6.1.2.
	CEILING OR WALL	SPACE WITH HARD WALL AND CEILING SURFACES AND AN AREA LESS THAN 900 SF. OCCUPANTS MUST WALK NO MORE THAN 33 FT TO FIND A LOCATION WITH AT LEAST THE MINIMUM REQUIRED CIS VALUE WITHIN THE SAME AREA IN ACCORDANCE WITH UFC 4-021-01, 4.6.1.2. VISUAL NOTIFICATION IS NOT REQUIRED PER UFC 3-600-01, 9-18.6.3. PROVIDE SPEAKERS MARKED WITH "ALERT" THROUGHOUT AREA.
	CEILING OR WALL	NORMALLY UNOCCUPIED SPACE WITH AN AREA GREATER THAN 900 SF. PROVIDE CLEAR LENS SPEAKER/STROBE MARK WITH "ALERT" THROUGHOUT AREA. TREAT SPACE AS HAVING HARD SURFACES. OCCUPANTS MUST WALK NO MORE THAN 50 FT TO FIND A LOCATION WITH AT LEAST THE MINIMUM REQUIRED CIS VALUE WITHIN THE SAME AREA IN ACCORDANCE WITH UFC 4-021-01, 4-6.1.2.

NOTE: REFER TO SPECIFICATION SECTION 28 31 76 FOR DESIGN CRITERIA TO BE INCORPORATED.

KEY NOTES:

1. PROVIDE SMOKE DETECTION AT CONTROL UNITS AND NOTIFICATION APPLIANCE CIRCUIT POWER EXTENDER LOCATIONS IN ACCORDANCE WITH NFPA 72.
2. PROVIDE SMOKE DETECTOR FOR ELEVATOR RECALL FUNCTIONS PER UFC 3-490-06.
3. PROVIDE INTERFACE COMPONENTS FOR MONITORING OF THE SPRINKLER SYSTEM TAMPER AND/OR WATERFLOW SWITCHES PER UFC 3-600-01.
4. PROVIDE MANUAL PULL STATIONS AT EXITS IN ACCORDANCE WITH NFPA 72.
6. PROVIDE DUCT SMOKE DETECTION FOR AIR HANDLER SHUTDOWN IN ACCORDANCE WITH NFPA 90A.
14. PROVIDE INTERFACE COMPONENT TO MONITOR AREA OF RESCUE ASSISTANCE SYSTEM.

KEY PLAN

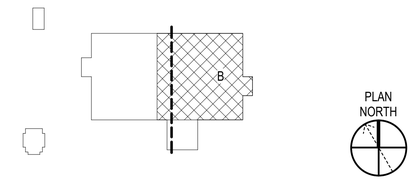

GRAPHIC SCALE(S)

1/8" =1'-0" 0' 4' 8' 16'

SYM	DESCRIPTION	DATE	APPR

NAVFAC

JAY THOMAS HIGASHI, STATE OF WASHINGTON, 31715, REGISTERED PROFESSIONAL ENGINEER
01/22/2026
Expiration Date of the License SEAL

ASMD LLC.
A/E INFO

APPROVED
Evan Miyazaki
FOR COMMANDER NAVFAC

ACTIVITY
NATHANIEL PYRON, MILCON PLANNER, DPPH

SATISFACTORY TO DATE 3/10/2026

DES	JTH	DRW AM	CHK RTB
PMDM			DKS/DMK
BRANCH MANAGER			KYM
CHIEF ENG/ARCH			KYM
FIRE PROTECTION			RYO

DEPARTMENT OF THE NAVY
NAVFAC PACIFIC
NAVAL FACILITIES ENGINEERING SYSTEMS COMMAND – PACIFIC
NAVAL FACILITIES ENGINEERING SYSTEMS COMMAND
MAKALAPA, HAWAII
U.S. NAVSUPPACT
MCB CAMP BLAZ, GUAM
JFY 2022 PROJECT J-875
BATTLE STAFF TRAINING FACILITY
ENLARGED FLOOR PLAN 2B - FIRE ALARM-MASS NOTIFICATION SYSTEM

SCALE: AS NOTED
EPROJECT NO.: 1696746
CONSTR. CONTR. NO.
NAVFAC DRAWING NO. 17322033
SHEET 213 OF 468
FA404

DRAWFORM REVISION: 25 AUGUST 2020

3/11/2026 10:13:21 PM FA404
P:\Horn22Jobs\22777 J-875 Battle Staff Training\Revit\LOCAL\BLDG-J875-1696746-F-local.rvt

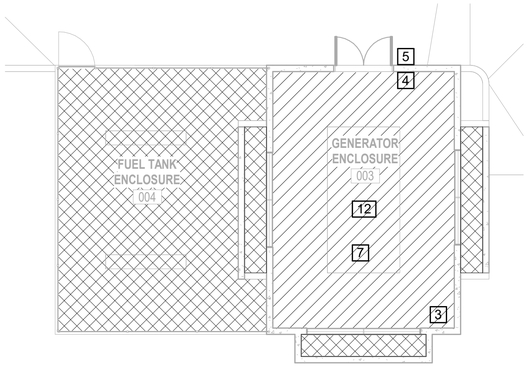

NOTE: ROUTE FIRE ALARM WIRNG FROM MAIN BUILDING TO UTILITY BUILDING THROUGH MINIMUM SCHEDULE 40 PVC CONDUIT.

PROVIDE TAMPER SWITCHES TO MONITOR THE TWO OS&Y CONTROL VALVES ON THE FIRE SPRINKLER BACKFLOW PREVENTER PER UFC 3-600-01, 9-7.10.7.

C1 ENLARGED UTILITY BUILDING FLOOR PLAN - FIRE ALARM-MASS NOTIFICATION SYSTEM

SCALE: 1/8" = 1'-0"

FIRE ALARM AREA DESIGN REQUIREMENT SCHEDULE

SYMBOL	LOCATION	DESCRIPTION
	N/A	FIRE ALARM NOTIFICATION DEVICES NOT REQUIRED
	CEILING OR WALL	PROVIDE CLEAR LENS SPEAKER/STROBES MARKED WITH "ALERT" THROUGHOUT AREA TO ACHIEVE DESIGN CRITERIA
	CEILING OR WALL	SPACE WITH HARD WALL AND CEILING SURFACES. PROVIDE CLEAR LENS SPEAKER/STROBE MARKED WITH "ALERT" THROUGHOUT AREA. OCCUPANTS MUST WALK NO MORE THAN 33 FT TO FIND A LOCATION WITH AT LEAST THE MINIMUM REQUIRED CIS VALUE WITHIN THE SAME AREA IN ACCORDANCE WITH UFC 4-021-01, 4-6.1.2.
	CEILING OR WALL	SPACE WITH HARD WALL AND CEILING SURFACES AND AN AREA LESS THAN 900 SF. OCCUPANTS MUST WALK NO MORE THAN 33 FT TO FIND A LOCATION WITH AT LEAST THE MINIMUM REQUIRED CIS VALUE WITHIN THE SAME AREA IN ACCORDANCE WITH UFC 4-021-01, 4.6.1.2. VISUAL NOTIFICATION IS NOT REQUIRED PER UFC 3-600-01, 9-18.6.3. PROVIDE SPEAKERS MARKED WITH "ALERT" THROUGHOUT AREA.

NOTE: REFER TO SPECIFICATION SECTION 28 31 76 FOR DESIGN CRITERIA TO BE INCORPORATED.

KEY NOTES:

3 PROVIDE INTERFACE COMPONENTS FOR MONITORING OF THE SPRINKLER SYSTEM TAMPER AND/OR WATERFLOW SWITCHES PER UFC 3-600-01.

4 PROVIDE MANUAL PULL STATIONS AT EXITS IN ACCORDANCE WITH NFPA 72.

5 PROVIDE WEATHERPROOF SPEAKERS MOUNTED ON THE EXTERIOR OF THE BUILDING PER UFC 4-021-01.

7 PROVIDE CARBON MONOXIDE DETECTION IN VEHICLE PARKING SPACES AND SPACES WITH COMBUSTIBLE FUEL BURNING EQUIPMENT PER UFC 3-600-01.

12 PROVIDE INTERFACE COMPONENTS TO MONITOR THE GENERATOR. THE FOLLOWING CONDITIONS MUST BE MONITORED:

1. GENERATOR RUNNING
2. GENERATOR FAULT
3. GENERATOR SWITCH IN NONAUTOMATIC POSITION

KEY PLAN

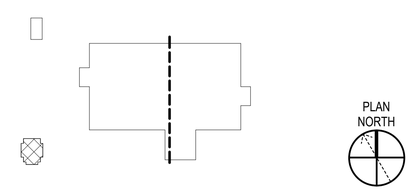

GRAPHIC SCALE(S)

1/8" =1'-0" 0' 4' 8' 16'

SYM	DESCRIPTION	DATE	APPR

NAVFAC

JAY THOMAS HIGASHI, STATE OF WASHINGTON, 31715, REGISTERED PROFESSIONAL ENGINEER
01/22/2026
Expiration Date of the License SEAL

ASMD LLC.
AE INFO

APPROVED
Evan Mizell
FOR COMMANDER NAVFAC

ACTIVITY
NATHANIEL PYRON, MILCON PLANNER, DPPH

SATISFACTORY TO DATE 3/10/2026

DES JTH | DRW AM | CHK RTB

PMDM DKS/DMK
BRANCH MANAGER KYM
CHIEF ENG/ARCH KYM
FIRE PROTECTION RYO

DEPARTMENT OF THE NAVY
NAVAL FACILITIES ENGINEERING SYSTEMS COMMAND
NAVFAC PACIFIC
U.S. NAVSUPPACT

NAVAL FACILITIES ENGINEERING SYSTEMS COMMAND ~ PACIFIC
MAKALAPA, HAWAII

MCB CAMP BLAZ, GUAM

JFY 2022 PROJECT J-875
BATTLE STAFF TRAINING FACILITY

ENLARGED UTILITY BUILDING FLOOR PLAN - FIRE ALARM-MASS NOTIFICATION SYSTEM

SCALE: AS NOTED
EPROJECT NO.: 1696746
CONSTR. CONTR. NO.
NAVFAC DRAWING NO. 17322034
SHEET 214 OF 468

FA405

DRAWFORM REVISION: 25 AUGUST 2020

3/11/2026 10:13:24 PM FA405
P:\Navy22Jobs\222771 J-875 Battle Staff Training\Revit\LOCAL\BLDG-J875-1696746-F-local.rvt

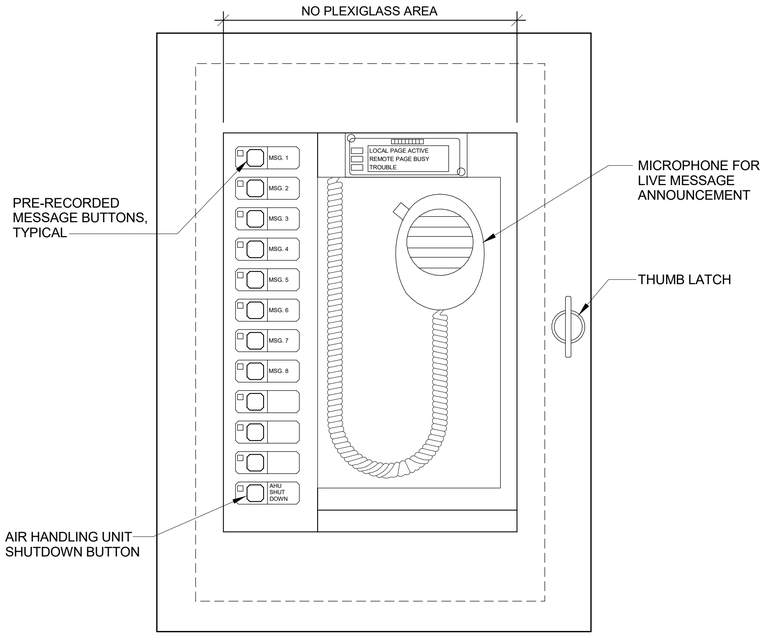

NOTE: MOUNT TOP OF LOC PANEL 4'-0" AFF

C1 MASS NOTIFICATION LOCAL OPERATING CONSOLE (LOC) DETAIL

SCALE: NTS

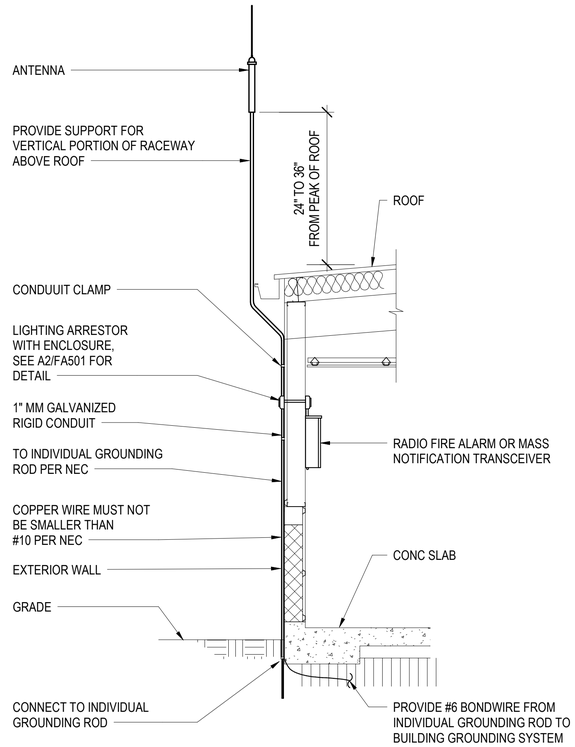

B2 ANTENNA TRANSMITTER

SCALE: NTS

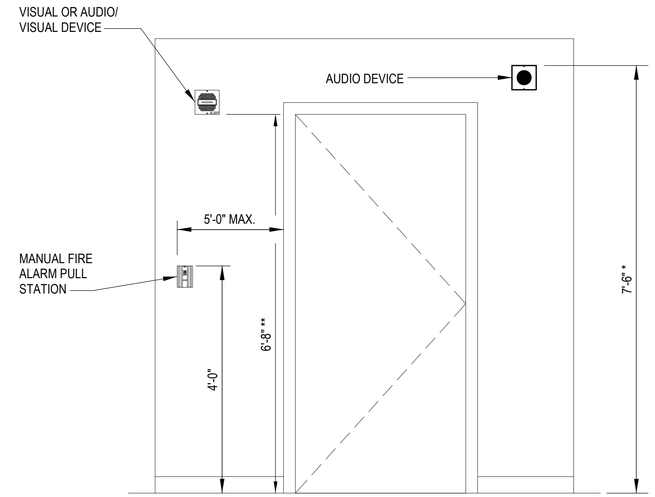

* IF CEILING HEIGHT DOES NOT PERMIT MOUNTING HEIGHTS NOTED FOR AUDIO DEVICES WHILE LEAVING A MINIMUM OF 6-INCHES BETWEEN THE CEILING AND THE TOP OF THE AUDIO DEVICE, THE DEVICE MUST BE MOUNTED AT 6-INCHES BELOW CEILING MEASURED TO THE TOP OF THE DEVICE.

** IF CEILING HEIGHT DOES NOT PERMIT MOUNTING HEIGHTS NOTED FOR VISUAL OR AUDIO/ VISUAL DEVICES WHILE LEAVING A MINIMUM OF 6-INCHES BETWEEN THE CEILING AND THE TOP OF THE VISUAL OR AUDIO/ VISUAL DEVICE, THE DEVICE MUST BE MOUNTED AT 6-INCHES BELOW CEILING MEASURED TO THE TOP OF THE DEVICE.

B4 TYPICAL MOUNTING DETAIL FOR FIRE ALARM DEVICES

SCALE: NTS

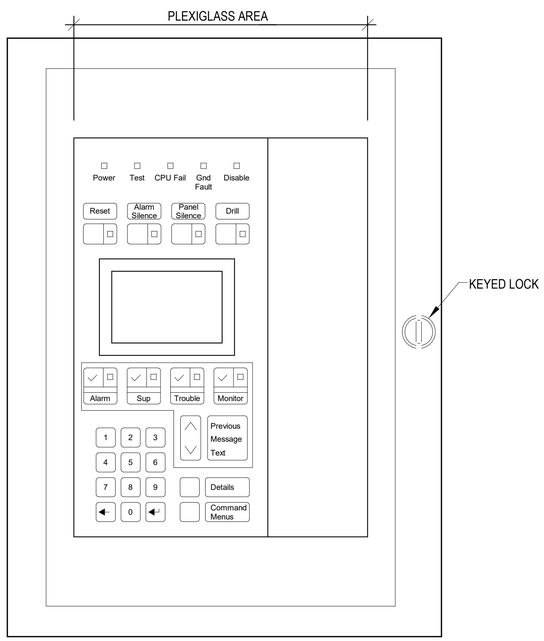

NOTE: MOUNT ANNUNCIATOR WITH THE TOP 6' AFF OR CENTERED AT 5' AFF, WHICHEVER IS LOWER

A1 REMOTE FIRE ALARM ANNUNCIATOR (ANN) DETAIL

SCALE: NTS

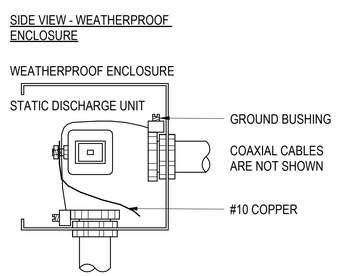

A2 LIGHTNING ARRESTOR DETAIL

SCALE: NTS

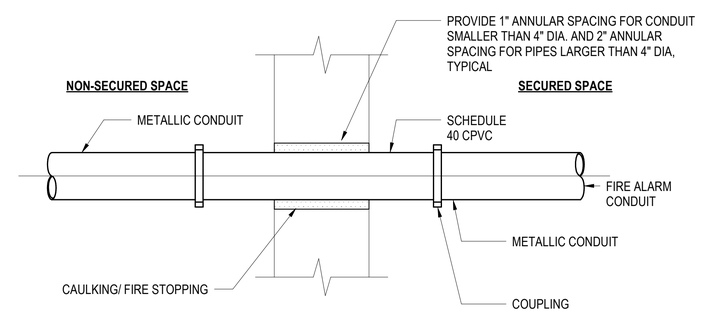

A4 SECURE SPACE CONDUIT PENETRATION DETAIL

SCALE: NTS

SYM	DESCRIPTION	DATE	APPR

NAVFAC

JAY THOMAS HIGASHI, STATE OF WASHINGTON, 31710, REGISTERED PROFESSIONAL ENGINEER
01/22/2026
Expiration Date of the License SEAL

ASMD LLC. A/E INFO

APPROVED
Evan Miyazal
FOR COMMANDER NAVFAC

ACTIVITY
NATHANIEL PYRON, MILCON PLANNER, DPPH
SATISFACTORY TO DATE 3/10/2026

DES	JTH	DRW	AM	CHK	RTB
PM/DM	DKS/DMK				
BRANCH MANAGER	KYM				
CHIEF ENG/ARCH	KYM				
FIRE PROTECTION	RYO				

DEPARTMENT OF THE NAVY
NAVAL FACILITIES ENGINEERING SYSTEMS COMMAND
NAVFAC PACIFIC
U.S. NAVSUPPACT

NAVAL FACILITIES ENGINEERING SYSTEMS COMMAND ~ PACIFIC
MAKALAPA, HAWAII
MCB CAMP BLAZ, GUAM

JFY 2022 PROJECT J-875
BATTLE STAFF TRAINING FACILITY

FIRE ALARM-MASS NOTIFICATION SYSTEM DETAILS

SCALE: AS NOTED
EPROJECT NO.: 1696746
CONSTR. CONTR. NO.
NAVFAC DRAWING NO. 17322035
SHEET 215 OF 468

FA501

DRAWFORM REVISION: 25 AUGUST 2020

3/11/2026 9:38:22 PM FA501
P:\Horn22Jobs\222771 J-875 Battle Staff Training\Revit\LOCAL\BLDG-J875-1696746-F-local.rvt

FIRE ALARM / MASS NOTIFICATION SYSTEM SEQUENCE OF OPERATIONS

	SYSTEM INPUT \ SYSTEM OUTPUT	1 ANNUNCIATE ALARM ZONE AT BUILDING FMCP	2 ANNUNCIATE SUPERVISORY ZONE AT BUILDING FMCP	3 ANNUNCIATE TROUBLE ZONE AT BUILDING FMCP	4 TRANSMIT ZONE 1 ALARM - WATERFLOW SIGNAL TO BASE REPORTING SYSTEM	5 TRANSMIT ZONE 2 ALARM - MANUAL SIGNAL TO BASE REPORTING SYSTEM	6 TRANSMIT ZONE 3 ALARM - SMOKE DETECTOR SIGNAL TO BASE REPORTING SYSTEM	7 TRANSMIT ZONE 4 ALARM - CARBON MONOXIDE SIGNAL TO BASE REPORTING SYSTEM	8 TRANSMIT ZONE 5 SUPERVISORY SIGNAL TO BASE REPORTING SYSTEM	9 TRANSMIT ZONE 6 TROUBLE SIGNAL TO BASE REPORTING SYSTEM	10 ACTIVATE FIRE ALARM EVACUATION MESSAGE FROM ALL SPEAKERS	11 ACTIVATE ALL VISUAL NOTIFICATION	12 BROADCAST LIVE OR RECORDED LOCAL MESSAGE FROM ALL SPEAKERS	13 TURN OFF TEMPORAL 3 FIRE ALARM MESSAGE	14 TURN OFF MASS NOTIFICATION AUDIO MESSAGE	15 BROADCAST BASE WIDE SYSTEM MESSAGE	16 ACTIVATE WATERFLOW ELECTRIC BELL	17 ACTIVATE TEMPORAL 4 SIGNAL & CO EVACUATE MSG	18 RECALL ELEVATOR TO PRIMARY FLOOR	19 RECALL ELEVATOR TO ALTERNATE FLOOR	20 ACTIVATE ELEVATOR CAB ANNUNCIATOR STEADY ON	21 ACTIVATE ELEVATOR CAB ANNUNCIATOR BLINKING	22 SHUNT TRIP POWER FOR ELEVATOR*	23 SHUT DOWN ASSOCIATED AIR HANDLER	24 TURN ON OCCUPANCY SENSOR-CONTROLLED, AND VACANCY SENSOR-CONTROLLED LIGHTS	25 SILENCE BUILDING PA SYSTEM	26 SILENCE TA - COC WATCH FLOOR SYSTEM	27	
A	MANUAL FIRE ALARM STATION ACTIVATES INTO ALARM	X				X					X	X													X	X	X		A
B	SPRINKLER SYSTEM WATERFLOW SWITCH ACTIVATES INTO ALARM	X			X						X	X					X								X	X	X		B
C	SMOKE DETECTOR ABOVE FIRE ALARM PANELS ACTIVATES INTO ALARM	X					X				X	X													X	X	X		C
D	CARBON MONOXIDE SENSOR ACTIVATES INTO ALARM	X						X				X						X							X	X	X		D
E	FIRST FLOOR ELEVATOR LOBBY SMOKE DETECTOR ACTIVATES INTO ALARM	X					X				X	X								X	X				X	X	X		E
F	SECOND FLOOR LEVEL ELEVATOR LOBBY SMOKE DETECTOR ACTIVATES INTO ALARM	X					X				X	X							X		X				X	X	X		F
G	ELEVATOR MACHINE ROOM SMOKE DETECTOR ACTIVATES INTO ALARM	X					X				X	X								X		X			X	X	X		G
H	ELEVATOR MACHINE ROOM WATER FLOW SWITCH ACTIVATES INTO ALARM	X			X						X	X					X						X		X	X	X		H
I	SPRINKLER SYSTEM/BACKFLOW PREVENTER TAMPER SWITCH ACTIVATES		X						X																				I
J	LOSS OF VOLTAGE TO CONTROL CIRCUIT FOR ELEVATOR SHUNT TRIP		X						X																				J
K	DUCT SMOKE DETECTOR ACTIVATES		X						X															X					K
L	ACTIVATION OF KNOX BOX TAMPER SWITCH		X						X																				L
M	ACTIVATION OF LOCAL MASS NOTIFICATION SYSTEM FROM FMCP		X						X			X	X													X	X		M
N	ACTIVATION OF THE LOCAL MASS NOTIFICATION SYSTEM DURING A FIRE ALARM CONDITION (ACTIVATION OF MNS OR MICROPHONE)		X						X			X	X	X												X	X		N
O	RECEIVE MESSAGE BROADCAST FROM BASE WIDE MASS NOTIFICATION SYSTEM		X						X			X				X										X	X		O
P	AFTER THE MASS NOTIFICATION SYSTEM HAS BEEN OVERRIDNG THE FIRE ALARM FOR 10 MINUTES										X	X			X											X	X		P
Q	SYSTEM TROUBLE			X						X																			Q
R	TWO-WAY SYSTEM COMMUNICATION FAILURE			X						X																			R
S	TWO-WAY SYSTEM POWER FAILURE			X						X																			S
		1	2	3	4	5	6	7	8	9	10	11	12	13	14	15	16	17	18	19	20	21	22	23	24	25	26	27	

RADIO FIRE ALARM TRANSMITTER ZONES	
1	ALARM - WATERFLOW
2	ALARM - MANUAL
3	ALARM - SMOKE DETECTOR
4	ALARM - CARBON MONOXIDE
5	SUPERVISORY
6	TROUBLE

*ACTIVATION OF SHUNT TRIP POWER FOR ELEVATOR MUST BE DIRECTLY FROM CONTACTS AT THE WATER FLOW SWITCH SERVING THE ELEVATOR MACHINE ROOM. WATERFLOW SWITCH MUST HAVE BE ZERO DELAY AND MUST BE NON-ADJUSTABLE.

SYM	DESCRIPTION	DATE	APPR

NAVFAC

JAY THOMAS HIGASHI, STATE OF WASHINGTON, 31715, REGISTERED PROFESSIONAL ENGINEER
01/22/2026
Expiration Date of the License SEAL

ASMD LLC.
AE INFO

APPROVED
Evan Miyal
FOR COMMANDER NAVFAC

ACTIVITY
NATHANIEL PYRON, MILCON PLANNER, DPPH

SATISFACTORY TO DATE 3/10/2026

DES JTH | DRW AM | CHK RTB
PM/DM DKS/DMK
BRANCH MANAGER KYM
CHIEF ENG/ARCH KYM
FIRE PROTECTION RYO

DEPARTMENT OF THE NAVY
NAVFAC PACIFIC
NAVAL FACILITIES ENGINEERING SYSTEMS COMMAND
NAVAL FACILITIES ENGINEERING SYSTEMS COMMAND ~ PACIFIC
MAKALAPA, HAWAII
U.S. NAVSUPPACT
MCB CAMP BLAZ, GUAM
JFY 2022 PROJECT J-875
BATTLE STAFF TRAINING FACILITY
FIRE ALARM-MASS NOTIFICATION SYSTEM - SEQUENCE OF OPERATIONS

SCALE: AS NOTED
EPROJECT NO.: 1696746
CONSTR. CONTR. NO.
NAVFAC DRAWING NO. 17322036
SHEET 216 OF 468

FA601

DRAWFORM REVISION: 25 AUGUST 2020

3/11/2026 10:13:25 PM FA601
P:\Horiz22\dks222771 J-875 Battle Staff Training\Revit\LOCAL\BLDG-J875-1696746-F-local.rvt

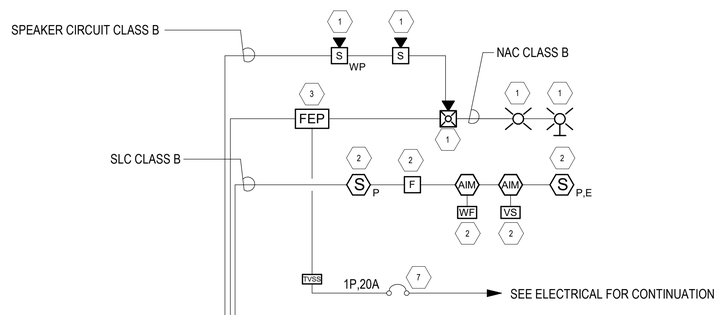

SECOND FLOOR

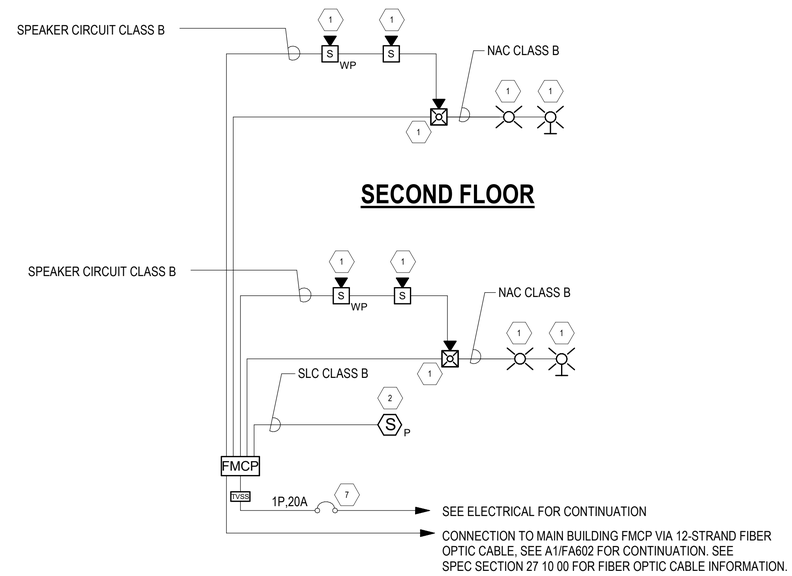

SECOND FLOOR

FIRST FLOOR

B3 FIRE ALARM-MASS NOTIFICATION RISER DIAGRAM - MAIN BUILDING SECURE SPACES

SCALE: NTS

KEY NOTES:

1. QUANTITY AND LOCATION BY CONTRACTOR'S DESIGN TO MEET DESIGN CRITERIA.
2. REFER TO FIRE ALARM PLANS FOR LOCATIONS OF DEVICE(S).
7. CIRCUIT BREAKER MUST BE LABELED FIRE ALARM.

GENERAL NOTES:

1. REFER TO F-001 FOR GENERAL NOTES, DESIGN CRITERIA, ABBREVIATIONS AND SYMBOLS.
2. THE FIRE ALARM RISER SHOWS THE INTENT OF THE FIRE ALARM INFRASTRUCTURE. THE DEVICES ARE NOT SHOWN. PROVIDE THE QUANTITY OF DEVICES AS REQUIRED TO COMPLY WITH NFPA 72, UFC 3-600-01, UFC 4-021-01, AND CONTRACT DOCUMENTS.
4. ALL WIRING PENETRATIONS THROUGH SECURE SPACE WALLS, FLOORS, AND CEILINGS MUST BE DONE USING FIBER OPTIC CABLING, SEE A4/FA501 FOR DETAIL.

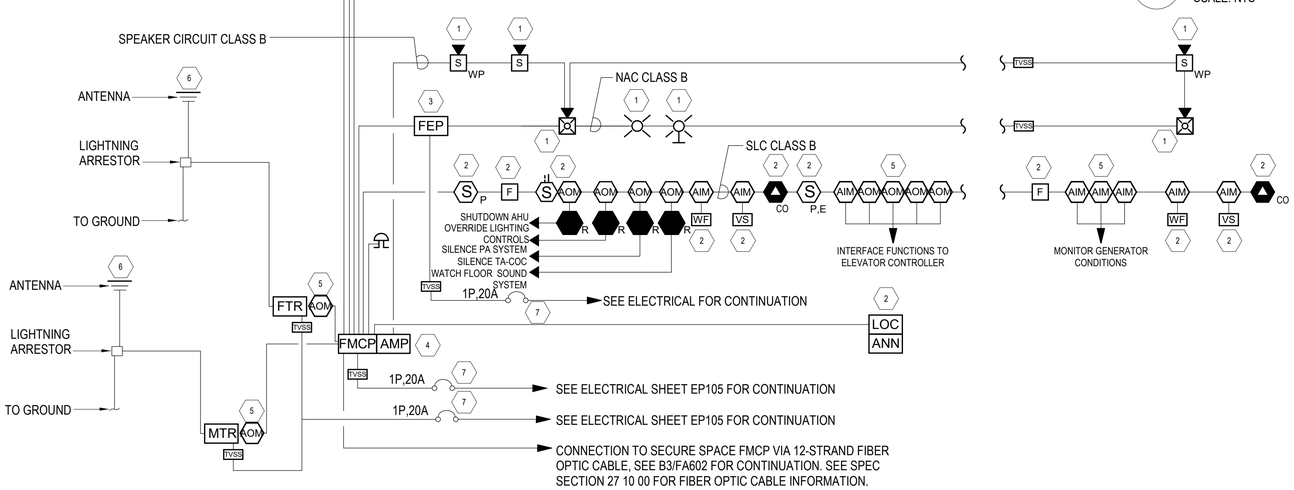

FIRST FLOOR

UTILITY BUILDING

A1 FIRE ALARM-MASS NOTIFICATION RISER DIAGRAM - MAIN BUILDING AND UTILITY BUILDING

SCALE: NTS

KEY NOTES:

1. QUANTITY AND LOCATION BY CONTRACTOR'S DESIGN TO MEET DESIGN CRITERIA.
2. REFER TO FIRE ALARM PLANS FOR LOCATIONS OF DEVICE(S).
3. ADDITIONAL BOOSTER PANELS WILL BE PROVIDED AS REQUIRED PER CONTRACTOR'S DESIGN AND MUST BE ACCOMPANIED BY AN AUTOMATIC SMOKE DETECTOR, PER NFPA 72, 10.4.4. WHERE ADDITIONAL BOOSTER PANELS ARE REQUIRED, THEY WILL BE LOCATED AS INDICATED ON PLAN.
4. ADDITIONAL AMPLIFIERS WILL BE PROVIDED AS REQUIRED PER CONTRACTOR'S DESIGN. WHERE ADDITIONAL AMPLIFIERS ARE REQUIRED, THEY MUST BE LOCATED IN THE MAIN PANEL.
5. PROVIDE ADDRESSABLE INPUT AND/OR OUTPUT MODULE(S) AS REQUIRED TO ACHIEVE THE FUNCTIONALITY INDICATED IN THE FIRE ALARM MATRIX.
6. MOUNT RADIO TRANSCEIVER ANTENNA PER MANUFACTURERS RECOMMENDATION. PROVIDE #6 BARE COPPER TO 3/4" X 10'-0" COPPER CLAD GROUND ROD AND TO BUILDING COUNTERPOISE, AND #10 COPPER TO LIGHTING ARRESTOR KIT.
7. CIRCUIT BREAKER MUST BE LABELED FIRE ALARM.

GENERAL NOTES:

1. REFER TO F-001 FOR GENERAL NOTES, DESIGN CRITERIA, ABBREVIATIONS AND SYMBOLS.
2. THE FIRE ALARM RISER SHOWS THE INTENT OF THE FIRE ALARM INFRASTRUCTURE. THE DEVICES ARE NOT SHOWN. PROVIDE THE QUANTITY OF DEVICES AS REQUIRED TO COMPLY WITH NFPA 72, UFC 3-600-01, UFC 4-021-01, AND CONTRACT DOCUMENTS.
3. EACH FLOW AND TAMPER SWITCH MUST REPORT BACK TO THE FMCP WITH A SEPARATE ADDRESS. GROUPED SWITCHES ON ONE ADDRESS ARE NOT ACCEPTABLE.

SYM	DESCRIPTION	DATE	APPR

NAVFAC

JAY THOMAS HIGASHI, STATE OF WASHINGTON, 31710, REGISTERED PROFESSIONAL ENGINEER
01/22/2026
Expiration Date of the License
SEAL

ASMD LLC.
A/E INFO

APPROVED
Evan Miyal
FOR COMMANDER NAVFAC

ACTIVITY
NATHANIEL PYRON, MILCON PLANNER, DPPH
SATISFACTORY TO DATE 3/10/2026

DES	JTH	DRW AM	CHK RTB
PM/DM			DKS/DMK
BRANCH MANAGER			KYM
CHIEF ENG/ARCH			KYM
FIRE PROTECTION			RYO

DEPARTMENT OF THE NAVY
NAVAL FACILITIES ENGINEERING SYSTEMS COMMAND ~ PACIFIC
NAVFAC PACIFIC
U.S. NAVSUPPACT
NAVAL FACILITIES ENGINEERING SYSTEMS COMMAND
MAKALAPA, HAWAII
MCB CAMP BLAZ, GUAM
JFY 2022 PROJECT J-875
BATTLE STAFF TRAINING FACILITY
FIRE ALARM-MASS NOTIFICATION SYSTEM - RISER DIAGRAM

SCALE: AS NOTED
EPROJECT NO.: 1696746
CONSTR. CONTR. NO.
NAVFAC DRAWING NO. 17322037
SHEET 217 OF 468

FA602

DRAWFORM REVISION: 25 AUGUST 2020

FA602
3/11/2026 9:38:24 PM
P:\Horiz\2Jobs\222771 J-875 Battle Staff Training\Revit\LOCAL\BLDG-J875-1696746-F-local.rvt