NAVSEA OP 5

0640-LP-002-2887 Ninth Revision

AMMUNITION AND EXPLOSIVES SAFETY ASHORE

THIS PUBLICATION SUPERSEDES NAVSEA OP 5 EIGHTH REVISION DATED 10 MARCH 2023

DISTRIBUTION STATEMENT A: Approved for public release. Distribution is unlimited.

PUBLISHED BY DIRECTION OF COMMANDER, NAVAL SEA SYSTEMS COMMAND

0640-LP-002-2887

THIS PAGE INTENTIONALLY BLANK

NAVSEA OP 5

0640-LP-002-2887 Ninth Revision

AMMUNITION AND EXPLOSIVES SAFETY ASHORE

THIS PUBLICATION SUPERSEDES NAVSEA OP 5 EIGHTH REVISION DATED 10 MARCH 2023

DISTRIBUTION STATEMENT A: Approved for public release. Distribution is unlimited.

PUBLISHED BY DIRECTION OF COMMANDER, NAVAL SEA SYSTEMS COMMAND

0640-LP-002-2887

2 April 2026

THIS PAGE INTENTIONALLY BLANK

DEPARTMENT OF THE NAVY
NAVAL SEA SYSTEMS COMMAND
1333 ISAAC HULL AVE SE
WASHINGTON NAVY YARD DC 20376-0001

IN REPLY REFER TO
8020
Ser 05/026
2 Apr 26

From: Commander, Naval Sea Systems Command (SEA 05)

Subj: REVISION NINE TO NAVAL SEA SYSTEMS COMMAND ORDNANCE PAHMPHLET 5, AMMUNITION AND EXPLOSIVES SAFETY ASHORE

Ref: (a) NAVSEA OP 5, Eighth Revision

Encl: (1) NAVSEA OP 5 Revision 9 Abstract of Significant Changes

1. This letter issues Naval Sea Systems Command (NAVSEA) Ordnance Pamphlet (OP) 5, ninth revision. This revision supersedes reference (a).

2. The subject manual has been revised to incorporate regulations and procedures regarding the safe handling and stowage of ammunition and explosives ashore. This fleet-driven update enhances readiness and interoperability by delegating risk-decision authority, standardizing weapons tests, and reclassifying the manual for public release to our allies and partners. A list of significant changes occurring in revision 9 to OP 5 is provided in enclosure (1).

3. All modifications of explosives safety criteria included in this revision are effective on the date of this revision. Change bars are included to assist the reader in identifying areas where changes to requirements or procedures have occurred.

SMALL.PETER.D.1048778646
Digitally signed by SMALL.PETER.D.1048778646
Date: 2026.04.02 16:18:58 -04'00'

P. D. SMALL
By direction

NAVSEA OP 5 REVISION 9 ABSTRACT OF SIGNIFICANT CHANGES

1. NAVSEA OP 5 has been reclassified from a Distribution C (restricted) technical manual to Distribution A (publicly releasable). This change follows a comprehensive review to remove all controlled unclassified information (CUI), making the document suitable for wider distribution.

2. References to authorities and offices have been updated to reflect recent name changes, e.g., references to the Department of Defense the Department of Defense Explosives Safety Review Board have been changed to Department of War (DoW) and Department of War Explosives Safety Office (DWESO), respectively.

3. Paragraph 1-4.4.1.g has been revised to require entry of all potential explosion site and exposed site approval data into the Enterprise Explosives Safety database.

4. Paragraph 1-6.3, table 1-1, table 1-2, and table 1-3 have been added to implement a tiered risk decision authority delegation framework for naval explosives safety deviations.

5. Paragraphs 1-6.4 through 1-6.10 have been added to establish the submission, renewal, cancellation, and numbering requirements for naval explosives safety deviations.

6. Paragraph 1-10 has been revised to establish the official procedures for reporting deficiencies in the manual, designating the Model Based Product Support (MBPS) website as the preferred method.

7. Paragraph 2-4.10 has been updated to permit the use of certified, intrinsically safe hearing protection in approved hazardous classified locations.

8. Paragraph 2-5.2.8.1 has been added to define conditions for applying the combat exemption to power application non-launch operations performed pier-side.

9. Electrical requirements have been updated for harmonization with NFPA 70 (NEC), specifically article 220.3(A) and article 250.30.

10. Paragraph 5-5.1 has been updated to include guidance for the installation of a power system ground.

11. Paragraph 5-5.4.2 has been revised to include grounding requirements for controlling hazards from electrical currents flowing between ordnance components during power application non-launch operations.

12. Paragraph 5-5.4.4 has been revised to mandate appropriate marking of ordnance grounds.

13. Paragraph 5-9.1 has been revised to permit electrical testing and reprogramming operations outside a test cell, provided these operations are approved by the Weapon System Explosives Safety Review Board (WSESRB).

14. Paragraph 5-9.1.1 has been added to establish grounding criteria for weapon systems during power application non-launch operations.

15. Paragraph 5-9.2.1 has been added to establish criteria for the powered interrogation and programming (PIAP) ground system during power application non-launch operations.

16. Paragraph 5-9.2.2.1 has been added to provide guidance for facilities lacking a dedicated PIAP ground for power application non-launch activities.

17. Paragraph 5-9.2.2.2 has been added to establish criteria for managing risk through scheduling during electrical testing and interrogation activities.

18. Paragraph 7-7.3 has been updated to include multiple hazard analysis methods for new or modified industrial operations and facilities, allowing installations to select the most appropriate method based on facility needs.

19. Paragraph 7-7.4.1 has been updated to align personnel protection requirements with Defense Explosives Safety Regulation (DESR) 6055.09.

20. Paragraph 7-9.3.1 has been revised to address specialized testing, clarifying NOSSA approval requirements for concurrence with power application non-launch activities.

21. Paragraphs 7-11.1.2 and 7-11.1.2.1 have been amended to ensure airfield clearance criteria comply with current airfield standards and DESR 6055.09.

22. Paragraph 7-13.6.c has been revised for consistency with DESR 6055.09 inert storage criteria.

23. Paragraph 7-13.10 has been revised from a mandatory to an advisory regulation, allowing an installation's commanding officer to accept risk.

24. Paragraph 7-13.11 has been revised to clarify criteria for overhead electrical power lines supporting existing facilities versus new facilities.

25. Paragraph 7-13.16.8 has been revised to provide clarifying guidance for utilities and services at explosive facilities.

26. Paragraph 7-14.7.3.2 revised underground storage criteria for consistency with the DESR 6055.09.

27. Table 7-31 (Criteria for Non-DoD Explosives Activities on DoW Installations) has been added outlining criteria for launch facilities (space orbital) and associated explosives activities.

28. Chapter 8 has been revised to clarify the conditions requiring an explosives safety site approval, including modifications to existing facilities.

29. Paragraph 8-1.2.1 has been updated to include new requirements for submitting requests for limited-quantity storage and operations.

30. Paragraph 8-1.2.1 has been updated to clarify the site approval submission and review process for the Navy and Marine Corps, with additional guidance on when DWESO review is required.

31. Paragraphs 8-1.2.5.c.(2)(c) and 8-1.2.5.c.(3)(b) have been revised to remove the 35% design review requirement and encourage installation to engage with Naval Ordnance Safety and Security Activity (NOSSA) during the conceptual design phase.

32. Paragraph 8-3 has been added to establish the construction and operational requirements for lithium battery explosives operating and charging facilities.

33. Paragraph 8-4.1.1 has been revised to clarify fire classification requirements for roof assemblies and roof coverings.

34. Paragraph 8-4.3.6 has been updated to include power application non-launch activities and clarify WSESRB concurrence and NOSSA approval requirements.

35. Paragraph 11-8.2.1.e has been revised to specify the 49 CFR 172-compliant solvent and remove the unsubstantiated 15% moisture content allowance for Research, Development, Test and Evaluation (RDT&E) operations.

36. Paragraph 13-2.2.1a(1) has been revised to address minimum separation distances for non-essential personnel during unrelated ammunition and explosives operations.

37. Paragraph 13-3.3.1.d has been revised to require a 30-minute wait period for shock tube initiated blasting caps, consistent with EODB 60A-1-1-31, General Information on EOD Disposal Procedures.

38. Environmental compliance requirements have been updated to align with current Environmental Protection Agency policies.

39. Appendix A has been updated with definitions for power application non-launch, proximity testing, electrical interrogation, and PIAP ground.

40. Procedures for requesting and maintaining deviations have been revised and moved from appendix C to paragraph 1. Appendix C has been removed in its entirety.

41. Appendix C (previously appendix D) has been revised to remove the Instructional Delivery Continuum Apprentice CNL-IDC-AP-1 course as a mandatory training requirement for apprentice trainers.

42. Table C-1 in appendix C (previously appendix D) has been revised to add AMMO-18 as mandatory training for Navy explosives drivers.

43. Appendix F (previously appendix G) has been updated with small quantities criteria based on the Small Quantities for Research and Laboratories test program in DESR 6055.09.

FOREWORD

1. It is the policy of the Department of the Navy to maintain an effective and aggressive ordnance safety program throughout the Department. Adherence to the instructions and regulations contained in NAVSEA OP 5, Ammunition and Explosives Safety Ashore, will provide a continuing, aggressive accident prevention program throughout all commands where military or civilian personnel are stationed or employed and ordnance equipment, ammunition, and explosives are used.

2. The purpose of this manual is to acquaint personnel engaged in operations involving ammunition, explosives, and other hazardous materials, and to prescribe standardized safety regulations for the production, renovation, care, handling, storage, preparation for shipment, and disposal of these items.

3. The instructions and regulations prescribed in NAVSEA OP 5 for handling, storing, preparation for shipment, production, renovation, surveillance, and maintenance of ammunition and explosives are considered minimum criteria. The specific items, technical manuals, drawings, and specifications referenced in this publication should be consulted for additional, detailed requirements.

4. This publication is not intended to supersede, contravene, or modify any Federal, state, municipal, or local laws and their supplements. If any provision of this publication appears to conflict with any other published regulation, this fact should be reported in detail to the Naval Ordnance Safety and Security Activity (NOSSA).

5. Changes to this manual will be issued as required. Comments or suggestions relative to material to be included in such changes should be forwarded as specified in chapter 1.

THIS PAGE INTENTIONALLY BLANK

TABLE OF CONTENTS

Foreword i

Table of Contents i

List of Tables ix

List of Figures xiii

Safety Summary xv

Chapter 1 Introduction 1-1

1-1. Purpose of NAVSEA OP 5. 1-1

1-2. Scope. 1-1

1-3. Department of War Explosives Safety Office (DWESO). 1-2

1-4. Responsibilities for Safety. 1-4

1-5. Activity Administration. 1-10

1-6. Deviations from Explosives Safety Criteria. 1-11

1-7. Intended Use of this Manual. 1-20

1-8. Definitions. 1-21

1-9. Reference Documents. 1-22

1-10. Reporting Deficiencies in this Manual. 1-22

1-11. Date of Publication. 1-22

Chapter 2 General Requirements, Standards, and Practices 2-1

2-1. General Safety Regulations. 2-1

2-2. Security Regulations. 2-15

2-3. Personnel Regulations. 2-17

2-4. Personal Protective Equipment. 2-19

2-5. Ship Berthing and Handling. 2-26

Chapter 3 Characteristics of Ammunition, Explosives and Related Hazardous Materials 3-1

3-1. Introduction. 3-1

3-2. Characteristics of Ammunition and Explosives. 3-1

TABLE OF CONTENTS (CONTINUED)

3-3. Test and Evaluation of Navy Explosives. 3-5
3-4. Hazards Due To Triboelectric Charging of Gases, Vapors, Liquids, and Dusts. 3-7
3-5. Characteristics of Propellants. 3-8
3-6. Characteristics of Pyrotechnics. 3-9
3-7. Characteristics of Chemical ammunition. 3-11
3-8. Generic Classes of Mishaps. 3-14
3-9. Hazard Classification of Ammunition and Explosives. 3-16
3-10. Storage Compatibility Groups. 3-17

Chapter 4 Fire Prevention, Protection, and Emergency Planning 4-1

4-1. Fire Prevention. 4-1
4-2. Emergency Planning. 4-14
4-3. Fire Protection. 4-14
4-4. Firefighting Hazard Identification. 4-30
4-5. Firefighter Measures. 4-40

Chapter 5 Electrical Requirements 5-1

5-1. Introduction. 5-1
5-2. Hazardous (Classified) Locations. 5-1
5-3. Static Electricity. 5-4
5-4. Lightning Protection Grounding System. 5-7
5-5. Secondary Grounding System. 5-9
5-6. Bonding. 5-23
5-7. Miscellaneous Grounding Requirements. 5-26
5-8. Test and Inspection of Ground Systems. 5-26
5-9. Operational Grounding Requirements. 5-39
5-10. Electrical Services. 5-46

Chapter 6 Lightning Protection 6-1

6-1. General. 6-1

TABLE OF CONTENTS (CONTINUED)

6-2. Storm Warning Systems 6-1
6-3. Policy for Lightning Protection. 6-3
6-4. Lightning Protection Systems. 6-4
6-5. Grounding. 6-7
6-6. Bonding. 6-9
6-7. Surge Suppresssion 6-12
6-8. Specific Lightning Protection Requirements. 6-13
6-9. Test and Inspection of Lightning Protection Systems. 6-15
6-10. Operations During Electrical Storms. 6-16

Chapter 7 Quantity-Distance Requirements and Standards 7-1

7-1. Introduction 7-1
7-2. Basic Q-D Principles. 7-2
7-3. Blast Effects at Varying Separation Distances. 7-5
7-4. Explosives Safety Quantity Distance Determinations. 7-9
7-5. Hazard Classification Procedures. 7-19
7-6. Fragments and Firebrands. 7-26
7-7. Personnel Protection. 7-34
7-8. Degree of Safety Protection 7-37
7-9. Permissible Exposure to Airblast Overpressure. 7-49
7-10. QD Determinations at Pier, Wharf, and Anchorage Facilities 7-55
7-11. Airports and Helipads. 7-63
7-12. ESQD Determination at Miscellaneous Explosives Facilities. 7-67
7-13. ESQD Determination at Non-Explosive Facilities. 7-70
7-14. ESQD Requirements for Underground Storage. 7-75
7-15. ESQD Requirements for Energetic Liquids 7-89
7-16. Mineral Exploration and Extraction 7-92

Chapter 8 Facilities 8-1

8-1. Explosives Safety Site Plan Approval Requirements 8-1

TABLE OF CONTENTS (CONTINUED)

8-2. Ammunition and Explosives Storage Facilities..... 8-10
8-3. Lithium Battery Facilities..... 8-22
8-4. Operating Buildings..... 8-23
8-5. Transfer Facilities..... 8-32
8-6. Pier and Wharf Facilities..... 8-33
8-7. Railroad Facilities and Equipment..... 8-36
8-8. Transportation Network..... 8-37
8-9. Identification of Facilities..... 8-37

Chapter 9 Production..... 9-1

9-1. Introduction..... 9-1
9-2. General Requirements..... 9-1
9-3. Explosive Production Equipment..... 9-7
9-4. Explosive Operations..... 9-14
9-5. Energetic Materials/Ammunition Items in the Production/Processing/ Maintenance/Renovation Environment..... 9-25

Chapter 10 Handling..... 10-1

10-1. Introduction..... 10-1
10-2. Palletized Unit Loads..... 10-4
10-3. Approved Handling Equipment..... 10-6
10-4. Safety Regulations for Use of Materials Handling Equipment (MHE)..... 10-7
10-5. Ordnance Handling Equipment (OHE) and Armament Weapons Support Equipment..... 10-8
10-6. Weight Handling Equipment (WHE) (Cranes, lifts, Hoists)..... 10-12
10-7. Safe Handling Regulations..... 10-14

Chapter 11 Storage..... 11-1

11-1. General..... 11-1
11-2. Magazine Storage Regulations..... 11-5
11-3. Magazine Operations..... 11-14
11-4. Magazine Repairs..... 11-16

TABLE OF CONTENTS (CONTINUED)

11-5. Open Storage Regulations. 11-16
11-6. Non-Magazine Storage Regulations..... 11-18
11-7. Waste Military Munitions (WMM). 11-21
11-8. Storage Requirements for Specific Types of Ammunition..... 11-24
11-9. Magazine, Magazine Area and Storage Inspection. 11-43
11-10. Quality Evaluation Programs. 11-47
11-11. Activity Inspection and Evaluation Process..... 11-48
11-12. Inspection of Government Furnished Materials (GFM) Propellants. 11-48

Chapter 12 Loading, Transport, and Transshipment..... 12-1

12-1. Introduction..... 12-1
12-2. Ammunition Packaging and Transportability..... 12-1
12-3. General Loading Regulations. 12-2
12-4. Preparation for Shipment..... 12-5
12-5. Shipment of Non-DoW Explosives. 12-5
12-6. Motor Vehicle/Railcar Modification. 12-5
12-7. Motor Vehicle Transportation..... 12-6
12-8. Railroad Transportation..... 12-14
12-9. Operations at Transfer Points..... 12-20
12-10. Air Shipment..... 12-23
12-11. Water Transshipment..... 12-23

Chapter 13 Treatment, Destruction, Disposition and Intentional Detonation of Ammunition and Explosives..... 13-1

13-1. Background. 13-1
13-2. Treatment of Ammunition and Explosives by Burning. 13-8
13-3. Treatment by Detonation..... 13-15
13-4. Specific Procedures for the Treatment of High Explosives. 13-23
13-5. Treatment of Propellants. 13-26
13-6. Treatment of Separate Loading Ammunition Charges..... 13-28

TABLE OF CONTENTS (CONTINUED)

13-7. Treatment of Gun Ammunition. 13-29
13-8. Treatment of Small Arms Ammunition. 13-30
13-9. Treatment of Bombs and Bomb-Type Ammunition. 13-30
13-10. Treatment of Rockets and Solid Propellant Motors. 13-30
13-11. Treatment of Explosive Initiating Devices, Fuzes, Boosters, Primers, and Tracers. 13-31
13-12. Treatment of Grenades, Mortar Ammunition, and Land Mines. 13-32
13-13. Treatment of Pyrotechnics. 13-32
13-14. Treatment and Disposition of Miscellaneous Explosives and Ammunition Items. 13-34
13-15. Material Potentially Presenting an Explosive Hazard. 13-35
13-16. Ammunition and Explosives (AE)-Free Certification for Non-Munitions Items. 13-50

Chapter 14 Response Actions Involving Known or Suspected Explosive Hazards 14-1

14-1. Introduction. 14-1
14-2. General. 14-1
14-3. Applicability. 14-2
14-4. Real Property Known or Suspected to Contain MEC and/or MPPEH. 14-3
14-5. Munition Responses. 14-3
14-6. Residual Explosives Hazard. 14-4
14-7. Exclusion Zones (EZ). 14-5
14-8. Transportation. 14-7
14-9. Selection and Design of Responses. 14-9
14-10. Special Consideration. 14-11
14-11. Explosives Safety Submissions (ESS). 14-14
14-12. Amendments and Corrections. 14-22
14-13. After Action Report (AAR). 14-23
14-14. Transfer of Real Property. 14-24
14-15. Change of Use. 14-26

Chapter 15 Operational Areas and Contingency Locations 15-1

15-1. General. 15-1

TABLE OF CONTENTS (CONTINUED)

15-2. Safety Requirements, Standards, And Practices. 15-3
15-3. Storage Operations. 15-5
15-4. Aviation Operations. 15-22
15-5. Port Operations. 15-28
15-6. Surveillance, Inspection and Minor Maintenance. 15-29
15-7. Transportation. 15-31
15-8. Captured Enemy Ammunition. 15-32

Appendix A Definitions and Abbreviations A-1

Appendix B Reference Documents B-1

B-1. General. B-1
B-2. Naval Inventory Control Point. B-1
B-3. Standardization Document Order Desk. B-6
B-4. Department of The Army. B-8
B-5. Marine Corps (MARCOR). B-8
B-6. Department of Homeland Security. B-9
B-7. Superintendent of Documents. B-9
B-8. Bureau of Explosives (BOE). B-10
B-9. North Atlantic Treaty Organization (NATO). B-10
B-10. United States Transportation Command (USTRANSCOM). B-11
B-11. American National Standards Institute (ANSI). B-11
B-12. American Society of Mechanical Engineers (ASME). B-11
B-13. American Society for Testing and Materials (ASTM). B-11
B-14. National Fire Protection Association (NFPA). B-12
B-15. Other Referenced Documents. B-13

Appendix C Explosives Safety Training Program C-1

C-1. General. C-1
C-2. Personnel Requirements. C-1
C-3. Course Descriptions/Availability. C-1

TABLE OF CONTENTS (CONTINUED)

C-4. Equivalent Courses. C-13
C-5. DAC Course Quotas. C-13
C-6. Tuition. C-14
C-7. Requests to Attend Training Outside of the Normal FY DAC Training Schedule C-14
C-8. Requests to Attend Out-Year On-Site Classes. C-14
C-9. Points of Contact C-14

Appendix D Procedure for Electrical Testing of Grounding Systems for Ordnance Storage and Operating Facilities D-1

Appendix E Procedure for the Visual Inspection of Grounding Systems for Ordnance Storage and Operating Facilities E-1

Appendix F Safety Regulations for Using Energetic Materials at Research, Development, and Test and Evaluation (RDT&E) Activities F-1

F-1. Purpose. F-1
F-2. Scope. F-1
F-3. Qualification/Certification. F-4
F-4. Standard Operating Procedures (SOP). F-4
F-5. Hazard Analysis/Risk Assessments. F-4
F-6. Special Circumstances. F-5
F-7. Peer Review. F-6
F-8. Shielding Guidelines. F-7
F-9. Energetic Materials Hazard Classification F-15
F-10. Specific Exceptions from NAVSEA OP 5. ..... F-16
F-11. Additional General Regulations for RDT&E Operations F-21
F-12. Laboratory Regulations. F-23
F-13. Pilot Plant Regulations. F-27
F-14. Test and Evaluation. F-34

LIST OF TABLES

Table 1-1. Risk Acceptance Authority for Navy Explosives Safety Deviations 1-12
Table 1-2. Risk Acceptance Authority for Marine Corps Explosives Safety Deviations..... 1-14
Table 1-3. Ship-Based Event Waivers..... 1-15
Table 3-1. Composition of High Explosives 3-2
Table 3-2. Tests to Determine the Properties of Navy Explosives..... 3-5
Table 3-3. Tests of Explosives Contained in MIL-STD-2105 (Series)..... 3-6
Table 3-4. Passing Criteria for Hazard Assessment Tests..... 3-6
Table 3-5. Summary of Hazards of Pyrotechnics 3-11
Table 3-6. Group A Chemical Ammunition (Lethal-Toxic)..... 3-12
Table 3-7. Group B Chemical Ammunition (Riot Control, Signal Cartridges) 3-13
Table 3-8. Group C Chemical Ammunition (Smoke)..... 3-13
Table 3-9. Group D Chemical Ammunition (Incendiary) 3-14
Table 3-10. Hazard Classes, Divisions and Associated Hazards 3-17
Table 3-11. Storage Compatibility Chart for Shore Activities 3-20
Table 3-12. Classification Codes 3-22
Table 4-1. Fire Symbol Hazards and Actions..... 4-33
Table 4-2. Chemical Hazard Symbols and Actions 4-36
Table 4-3. Compatibility Group and Chemical Hazard Symbols Required for Storage of Chemical Ammunition and Substances..... 4-38
Table 4-4. Emergency Withdrawal Distances for Nonessential Personnel..... 4-42
Table 5-1. Maximum Acceptable Resistance to Ground..... 5-9
Table 5-2. Guide to Approximate Location of Reference Probes 5-36
Table 5-3. Grounding Requirements 5-42
Table 7-1. Blast Effects on Personnel 7-5
Table 7-2. Blast Effects at Varying Separation Distances..... 7-5
Table 7-3. Energetic Liquid Explosive Equivalents..... 7-13

LIST OF TABLES (CONTINUED)

Table 7-4. Factors to Use When Converting Gallons of Energetic Liquids into Pounds 7-15

Table 7-5. Hazard Classifications and Minimum Q-D for Energetic Liquids 7-22

Table 7-6. EIS and EIS Ammunition Hazard Classifications/Compatibility Groups 7-24

Table 7-7. Class/Division 1.1 Inhabited Building and Public Traffic Route Distance 7-93

Table 7-8. Hazardous Fragment Distances for Open Stacks of Selected Hazard Division 1.1 Items 7-98

Table 7-9. Hazard Class/Division 1.1 Hazardous Fragment Distances 7-100

Table 7-10. Intraline Distances for Class/Division 1.1 Items 7-102

Table 7-11. Hazard Class/Division 1.1 Intraline Distances from Earth-Covered Magazines 7-105

Table 7-12. Intermagazine Hazard Factors and Distances for Hazard Class/Division 1.1 7-108

Table 7-13. Intermagazine Hazard Factors and Distances for Hazard Class/Division 1.1 to Existing Type I, Type IIA, and Type IIB Smokeless Powder/Projectile Magazines ... 7-109

Table 7-14. Hazard Class/Division 1.1 Intermagazine Hazard Factor and Distances for Use with Table 7-12 and Table 7-13 7-110

Table 7-15. Summary of Hazard Sub-Divisions 1.2.1, 1.2.2, and 1.2.3 Quantity-Distances 7-114

Table 7-16. Hazard Class/Sub-Division 1.2.1 Quantity-Distances for Munitions with NEWQD > 1.60 Pounds 7-116

Table 7-17. Hazardous Debris Distances for HC/D 1.2.1 Items Stored in Structures which can Contribute to the Debris Hazard 7-119

Table 7-18. Hazard Class/Sub-Division 1.2.2 Quantity-Distances for Munitions with ..... NEWQD <1.60 Pounds 7-121

Table 7-19. Hazard Class/Sub-Division 1.2.1, 1.2.2, and 1.2.3 Mixing Rules 7-123

Table 7-20. Quantity-Distance Requirements for Class/Division 1.3 Items 7-124

Table 7-21. Quantity-Distance Requirements for Class/Division 1.3 Bulk Smokeless Powder, Ballistite in Process[1] and Not in Containers 7-130

Table 7-22. Quantity-Distances Class/Division 1.4 7-131

Table 7-23. Quantity-Distance Criteria for EIS and Class/Division 1.6 Articles 7-133

Table 7-24. Variation of Maritime Prepositioning Force Ships Inhabited Building Distance/Public Traffic K Factors 7-135

LIST OF TABLES (CONTINUED)

Table 7-25. Variation of Maritime Prepositioning Force Ships Ship-to-Ship Distance with Loadout 7-136

Table 7-26. Minimum Quantity-Distance Separation Between Ship Units (Ship, Barge, and/or Pier) and Other Areas 7-137

Table 7-27. Separation Distances for Pier and Wharf Facilities 7-139

Table 7-28. Quantity-Distance Standards for Class/Division 1.1 Items at Airfields and Helipads 7-141

Table 7-29. Application of Safety Distances as Related to Airfields and Helipads 7-143

Table 7-30. Non-DoW Explosives Activities on DoW Installations 7-145

Table 7-31. Criteria for Launch Facilities and Associated Explosives Activities on DoW Installations 7-146

Table 7-32. Chamber Loading Density (W) 7-147

Table 7-33. Chamber Separation Distances for Underground Storage 7-149

Table 7-34. Distance to Protect Against Ground Shock from Underground Storage 7-151

Table 7-35. Functions of Underground Chamber Loading Density 7-153

Table 7-36 Distances to Protect Against Hard Rock Debris from Underground Storage Sites ... 7-154

Table 7-37. Distances to Protect Against Soft Rock Debris from Underground Storage Sites 7-156

Table 7-38. Values for Ratio, D_{HYD}/V_E 7-158

Table 7-39. Scaled IBD for Airblast without Mitigating Devices 7-159

Table 7-40. Q-D Criteria for OSHA/NFPA Class I-III Flammable and Combustible Energetic Liquids Storage in Detached Buildings or Tanks 7-160

Table 7-41. Q-D Criteria for Energetic Liquid Oxidizer (excluding Liquid Oxygen) Storage in Detached Buildings or Tanks 7-161

Table 7-42. Q-D Criteria for Liquid Oxygen 7-162

Table 7-43. Q-D Criteria for Liquid Hydrogen and Bulk Quantities of Hydrazines 7-163

Table 8-1. Intermagazine Separation for Barricaded Storage Modules for Mass-Detonating Explosives 8-17

Table 9-1. Minimum Separation Distances for Bulk Explosives on Conveyors 9-10

Table 9-2. Minimum Separation Distances for Explosive Filled Bombs, etc., Transported Between Operating Buildings 9-23

LIST OF TABLES (CONTINUED)

Table 11-1. Conveyance Temperature Adjustments 11-19

Table 13-1. Default Maximum Case Fragment Distances Versus Diameter for Intentional Detonations 13-4

Table 13-2. Default Maximum Case Fragment Distances Versus Net Explosive Weight for Intentional Detonations 13-6

Table 13-3. Classifications of Detonation Sites 13-18

Table 13-4. Demolition Training Ranges 13-19

Table 13-5. Maximum Weight Limit for Burning High Explosives 13-24

Table 13-6. TNT Demolition Blocks Required for the Destruction of Projectiles 13-29

Table 14-1. Hazard Classification Guidance Table for MDEH Safe-To-Transport Certification 14-9

Table 15-1. Minimum Separation Quantity Distance for ASP Areas 15-8

Table 15-2. Quantity Distance for Field Storage Units 15-13

Table 15-3. Quantity Distance Table for Basic Load Ammunition Holding Areas 15-17

Table 15-4. Q-D Requirements for Armored Vehicles 15-18

Table 15-5. Effects of Explosions and Permissible Exposures 15-19

Table 15-6. Separation Distances at Expeditionary Airfields 15-24

Table C-1. Explosives Safety Training C-16

Table F-1. List of Activities that Perform RDT&E Operations with Energetic Materials F-2

Table F-2. Description of Shields F-11

Table F-3. Principle Characteristics that Differentiate Laboratory Operations from Pilot Plant Operations F-24

Table F-4. Principle Characteristics which Differentiate Pilot Plants from Production Plants F-28

LIST OF FIGURES

Figure 1-1. Submission Flow Based on Approval Level 1-13
Figure 1-2. Deviation Naming Convention 1-17
Figure 2-1. Record of Certification and Identification 2-5
Figure 4-1. Fire Bill Procedures 4-17
Figure 4-2. Standby Tug Criteria Summary for Cargo Ammunition Ships 4-29
Figure 4-3. Fire Division Symbols 4-32
Figure 4-4. Chemical Hazard Symbols 4-35
Figure 4-5. Fire Direction Symbol 4-35
Figure 5-1. Example of Conductive Floor Electrode Locations 5-14
Figure 5-2. Testing Shoes On Wearer 5-17
Figure 5-3. Testing Shoes Off of Wearer 5-17
Figure 5-4. Primary and Secondary Grounding Systems for Typical Ordnance/Explosive Handling Building 5-21
Figure 5-5. Examples of Exothermic Weld Configurations 5-24
Figure 5-6. Examples of Bolted Bonds 5-25
Figure 5-7. Example of a Sketch Identifying Electrical Test Points 5-29
Figure 5-8. Sample Data Sheet 5-30
Figure 5-9. Alternate Technique for Labeling Test Points 5-31
Figure 5-10. Four Terminal Tester Setup 5-33
Figure 5-11. Spheres of Influence 5-34
Figure 5-12. Plot of Earth Resistance vs. Probe Locations 5-35
Figure 5-13. U.S. Air Force Probe Locations 5-37
Figure 5-14. Grounding with a Conductive Work Surface 5-40
Figure 5-15. Single Point Ground of Ordnance Items 5-41
Figure 6-1. Zone of Protection for Mast Height “H” 6-6
Figure 6-2. Connections of Metal Masts to the Ground Girdle 6-8

LIST OF FIGURES (CONTINUED)

Figure 6-3. Grounding and Bonding of Railroad Tracks 6-10
Figure 7-1. Standard NEW Posting Placard 7-17
Figure 7-2. Quantity-Distance Requirements Based on Magazine Siting 7-42
Figure 7-3. Application of Quantity-Distance at Ammunition Terminals 7-59
Figure 7-4. Typical Underground Facilities 7-76
Figure 7-5. Debris Dispersal Functions 7-81
Figure 7-6. Constant Pressure Contour 7-84
Figure 7-7. Portal Barricade Location, Height and Length 7-88
Figure 8-1. Determination of Barricade Length and Height 8-20
Figure 10-1. Container Lift Arm Assembly 10-5
Figure 11-1. Use of Red Ribbon to Indicate an Empty Container 11-5
Figure 11-2. Magazine Safety Regulations Placard 11-12
Figure 12-1. Blocking/Bracing Certification Tags 12-16
Figure 12-2. Proper Railcar Chocking Method 12-19
Figure 13-1. Detonation Training Range 13-20
Figure 13-2. Typical High Explosives Burning Area 13-25
Figure 15-1. Typical Area Layout Plan for an Ammunition Supply Point 15-7
Figure 15-2. Typical Expeditionary Airfield Layout 15-23
Figure D-1. Earth Resistance Testing Equipment Configuration D-8
Figure D-2. Bonding Resistance Testing Equipment Configuration D-13
Figure E-1. Visual Inspection Checklist E-2
Table F-1. List of Activities that Perform RDT&E Operations with Energetic Materials F-2
Table F-2. Description of Shields F-11
Table F-3. Principle Characteristics that Differentiate Laboratory Operations from Pilot Plant Operations F-24
Table F-4. Principle Characteristics which Differentiate Pilot Plants from Production Plants F-28

SAFETY SUMMARY

Warnings and cautions appear throughout this manual. It is important that the significance of each be thoroughly understood by personnel using this manual. Definitions are as follows:

⚠ WARNING

WARNING is used to highlight a statement or some other notification about an operating or maintenance procedure, practice, or condition that if not strictly observed could result in death, injury, or long-term health hazards.

CAUTION

CAUTION is used to highlight a statement or some other notification about an operation or maintenance procedure, practice, or condition that if not strictly observed could result in damage to or destruction of equipment, or loss of mission effectiveness.

This publication is a safety manual which contains the instructions and regulations necessary for safe ammunition production, handling, storage, assembly and shipment, and other ordnance operations at Naval and Marine Corps shore establishments. While the entire content of this publication is a warning to the user, the following warnings and cautions appear in the text and are repeated here for emphasis:

⚠ WARNING

Ammunition reclassified as unsafe to handle shall not be moved or inspected. Notify explosive ordnance disposal (EOD) personnel immediately.

⚠ WARNING

There is risk of electric shock when wearing conductive shoes and operating electrical equipment. To mitigate this risk, conductive floors and shoes must have an average and minimum resistance. When testing the resistance of conductive floors, the minimum resistance may include the resistance of the shoes used. See paragraph 5-5.3.2.3.

SAFETY SUMMARY (CONTINUED)

⚠ WARNING

Instruments for testing the conductivity of floors shall be used inside the room only if it is free of exposed explosives and no exposed electro-explosive devices (EED) are present. Otherwise, the test instrument shall be placed outside the room. In any case, the floor in the immediate area of the electrode contact shall be thoroughly cleaned of all explosive material, and the air shall be purged of explosive dust or flammable vapors.

⚠ WARNING

Instruments for testing the conductivity of shade structures shall be used under the shade structure only if it is free of exposed explosives and no exposed electro-explosive devices (EED) are present. In any case, the shade fabric and metal structure in the immediate area of the electrode contact shall be thoroughly cleaned of all explosive material.

⚠ WARNING

Personnel required to work on electrical equipment in areas where conductive floors are installed shall not wear conductive shoes.

⚠ WARNING

Mixing of ordnance electrical safety (static, facility, or ordnance) grounds and the power system ground required for the electrical test set may present a hazard, especially during transient (weather) events.

⚠ WARNING

Weapons in direct contact with a concrete floor will have a high impedance bond to the secondary grounding girdle. High impedance bonds enable slower energy transfer, which increases the risk of energetic activation, dudding, or compromised operability within the ordnance or weapon system.

SAFETY SUMMARY (CONTINUED)

⚠ WARNING

Risk management via scheduling must account for unforeseen or un-forecasted transient (weather) events that may occur during electrical testing/interrogation operations. Contingency protocols for these situations must be included in pertinent standard operating procedures (SOP).

⚠ WARNING

Exposed power circuits will not be worked on in a building or room containing exposed explosives.

⚠ WARNING

Request explosive ordnance disposal (EOD) emergency support for any item suspected to be unexploded ordnance (UXO).

⚠ WARNING

Nails shall never be driven in the direction of an explosive load.

⚠ WARNING

Plastic bedliners generate static electricity and are not authorized for use in the transport of scrap or bulk explosives in any container nor for the transport of any ammunition, explosives or related hazardous material that is not packaged in its approved shipping container.

⚠ WARNING

1. Only authorized ordnance handlers shall handle any explosives materials.

2. A minimum of two personnel shall be required to move explosives.

SAFETY SUMMARY (CONTINUED)

⚠ WARNING

The (state manufacturer and model number specified above) is not approved for use in hazardous (classified) locations and shall not be used in any locations where there are explosives dusts, or flammable or combustible vapors.

⚠ WARNING

Never use a multimeter to check continuity of a firing circuit that includes an electro-explosive device (EED). Only activity approved devices that are current (amperage) limited may be used for checking continuity in a circuit that includes an EED.

CAUTION

Unless testing or analysis has identified that the weapon system's electro-explosive devices (EED) in this configuration are not sensitive to a human-borne electrostatic discharge (ESD) threat, personnel must bring themselves to the same electric potential as the weapon by touching the metallic skin of the weapon with a bare hand prior to touching any contacts that may serve as a path to conduct electrostatic charges to EEDs.

CAUTION

The magazine and intraline distances specified in the preceding notes will provide protection only against the simultaneous detonation of mass detonating explosives on adjacent aircraft. This distance does not prevent serious damage to aircraft or provide protection against the propagation of an incident from the source by fragments, debris, or fire to the ammunition and explosives on adjacent aircraft.

CAUTION

Since electricians should not be allowed to work on live electrical equipment while wearing conductive shoes (see paragraph 5-5.3.2), all explosives must be removed from an area where and when this type of work is required so that the electrician may wear nonconductive shoes.

SAFETY SUMMARY (CONTINUED)

CAUTION

Beryllium alloys should only be used if no other suitable material is available. Finely powdered beryllium is extremely toxic. Never subject beryllium tools to any grinding, cutting, or abrasive process that creates dust, chips, shavings, etc.

CAUTION

In melt-mix-pour operations, care should be taken to prevent the creation of “cold air” areas adjacent to the equipment as a result of excessive air intake to the venting system. Explosives can sublime and they shall be prevented from collecting on the machines and overhead structures.

CAUTION

Under no circumstances shall soap or other alkaline preparations be used to remove TNT exudate because the addition of a small amount of hydroxide, caustic soda, or potash will sensitize TNT and cause it to explode if heated to 160° F.

CAUTION

The use of intermagazine distance, both K11 and K6 barricaded provide protection only against the simultaneous detonation of mass detonating explosives on adjacent aircraft or at adjacent sites. Intermagazine distance does not prevent serious damage to aircraft or provide protection against the propagation of an incident from the source by fragments, debris or fire to the ammunition and explosives on other aircraft. To obtain asset preservation, K24/30 distance should be applied for hazard class/division (HC/D) 1.1 ammunition or public traffic route (PTR) distance for HC/D 1.2 and 1.3 material.

CAUTION

Conductive floor testing shall be conducted only in areas where there are no explosives dusts, flammable or explosives vapors or exposed electro-explosive devices (EED).

SAFETY SUMMARY (CONTINUED)

CAUTION

The (state manufacturer and model number of the equipment) is not approved for use in hazardous (classified) locations. The test equipment shall not be located in any area where there may be explosives dusts, exposed electro-explosive devices (EED), or flammable or combustible vapors.

CAUTION

The test leads shall be disconnected from the test equipment until which time the leads have been connected to the test points and (test conductor) has given the command to make the reading.

CAUTION

Prior to connecting the leads to the test equipment, (test equipment operator) shall ensure that the power to the test equipment is OFF.

In addition, notes in the text are used to emphasize unusual or special procedures or conditions.

CHAPTER 1
INTRODUCTION

1-1. PURPOSE OF NAVSEA OP 5.

The explosives safety policies of the Department of the Navy (DON) are directed at providing reliable ammunition and explosives in sufficient quantity to satisfy Navy and Marine Corps requirements in a safe manner. These policies emphasize safe and efficient operating procedures while: (1) Providing the maximum possible protection to personnel and property from the damaging effects of potential accidents involving DON ammunition and explosives, (2) Limiting the exposure of a minimum number of persons, for a minimum time, to the minimum amount of ammunition and explosives consistent with safe and efficient operations. The purpose of this manual is to acquaint personnel with the characteristics and hazards of ammunition, explosives, and other related hazardous materials and to specify standardized safety regulations for all operations where ammunition and explosives are or are intended to be present.

1-2. SCOPE.

This manual provides explosives safety information and regulations regarding conventional ammunition, ammunition components, explosives, and related hazardous material operations at all DON activities as defined in appendix A, to include privately owned land where this document has been specified for the storage or handling of ammunition and explosives, and overseas locations established under host nation agreements. The safety regulations are intended to control the hazards associated with these operations and are the minimum requirements necessary for protecting personnel and property. The explicit safety rules and regulations specified in this publication are mandatory. Greater protection shall be provided where possible. Nuclear weapons are excluded from the requirements of this manual. However, these requirements apply to the conventional components of nuclear weapon systems and warheads that affect or are affected by Explosives Safety Quantity Distance (ESQD) criteria. Supplementary instructions for transporting, handling, storing and disposing of specific conventional and nuclear weapons are provided in other appropriate Navy publications. The safety standards that are contained in this manual are to be used for facilities siting and construction except in those cases:

a. When facilities have already been constructed or were approved for construction under plans developed prior to the date of this publication or its latest change.

b. Where existing facilities do not comply with these standards, refer to paragraph 8-1.6 for guidance.

c. Where an analysis accepted by both Naval Ordnance Safety and Security Activity (NOSSA) and the Department of War Explosives Safety Office (DWESO) shows that the required degree of safety is provided through protective construction or other specialized safety features.

d. When site approval has been granted by the DWESO using Safety Assessment for Explosives Risk (SAFER) in accordance with paragraph 8-1.5.

e. When planned facilities have been certified by the Secretary of the Navy (paragraph 1-6.3) as essential because of operational necessity or other compelling reasons.

f. These exceptions from ammunition and explosives safety standards shall be documented in permanent records at the activity. This document must show the date the applicable standard was published and the date the deviant facility was approved for safety or first was used in the deviating manner. Specific guidance on site approval requirements is provided in paragraph 8-1.2.1.

1-2.1. OUTSIDE CONTINENTAL UNITED STATES (OCONUS). Explosives safety policies also apply to DON personnel and property when hazarded by known host nation or off-installation ammunition and explosive hazards.

1-3. DEPARTMENT OF WAR EXPLOSIVES SAFETY OFFICE (DWESO).

1-3.1. PURPOSE. The purpose of the DWESO is to establish and recommend safety standards that are designed to prevent or correct hazardous conditions associated with ammunition and explosives operations. These safety standards are the basis for Navy safety policy; however, DON activities shall operate under the criteria of this manual, Office of the Chief of Naval Operations (OPNAV) Instructions, and Marine Corps Orders (MCO) addressing explosives safety.

1-3.2. AUTHORITY. Jurisdiction of the DWESO extends to all facilities where Department of War (DoW) explosives are manufactured, tested, handled, reworked, transported, stored, or disposed within the United States, its territories and possessions, and within areas where the DON has long term rights established with host nations. When DoW ammunition and explosives are located in overseas areas, DoW activities shall comply with the policy of the host nation, applicable multinational (MN), or U.S. explosives safety standard, whichever are more protective, unless standard applicability is mandated by international agreement (IA). When such ammunition is not in U.S. custody or, under U.S. control, compliance with U.S. standards through host country agreements or arrangements is directed.

1-3.3. RESPONSIBILITIES. The following paragraphs describe the responsibilities of the DWESO that have been developed under the policy direction and program guidance of the Office of the Under Secretary of War for Acquisition and Sustainment (USW (A&S)) and in agreement with other DoW policies and directives. DWESO responsibilities excerpted from DoW Directive 6055.9 Include:

a. Providing impartial and objective advice to the Secretary of Defense, the Secretaries of the Military Departments, and the Directors of Defense Agencies concerning ammunition and explosives manufacturing, testing, handling, reworking, disposal, transportation, storage, and siting with special attention to preventing conditions that will endanger life and property inside and outside DoW activities.

b. Recommending DoW-wide safety standards designed to prevent or correct hazardous conditions associated with ammunition and explosives to the DUSD (E&S) or his/her designee for approval and publication.

c. Establishing, with the assistance of the DoW Components, joint regulations for explosives hazard classification procedures and arbitrating or otherwise resolving differences among DoW Components on reassigning appropriate hazard classifications.

d. Maintaining a liaison with other Government departments, allied Governments, and industrial organizations that have mutual interests or responsibilities in safety matters involving ammunition and explosives.

e. Keeping DoW Components informed about safety problems relating to ammunition and explosives development, manufacture, testing, handling, transportation, storage, maintenance, rework, salvage, and disposal.

f. Surveying, studying and evaluating activities to determine compliance with ammunition and explosives safety standards and detecting conditions that could result in loss of life or undue damage to property inside and outside DoW activities.

g. Reviewing and analyzing reports, data, and information from all sources where ammunition and explosives hazards, accidents, and safety, except nuclear, are involved and making appropriate recommendations to proper authorities for establishing revisions of standards and procedures.

h. Reviewing and approving, with respect to safety considerations, all general site plans for construction or modification of fixed or movable ammunition and explosives facilities and sites and facilities in proximity to or affected by these ammunition and explosives facilities and sites, and giving impartial and objective advice to the DoW Components that are involved in the safety of these facilities and sites.

i. Preparing programs of investigation, research, study and tests concerning ammunition and explosives hazards that are required to develop and maintain safety standards and execute the portions of these programs that are approved by the Office of the Secretary of Defense.

j. Performing other duties that may be assigned by the DUSD (ES) or his/her designee.

NOTE

DWESO responsibilities excerpted from DoW Explosives Safety Regulation (DESR) 6055.09 do not apply to DoW component management of brain health risks of blast overpressure during testing, training, and operations of weapon systems (e.g., artillery, mortars, and shoulder-fired weapons) or breaching activities, as detailed in Deputy Secretary of Defense memorandum, “Department of Defense Requirements for Managing Brain Health Risks from Blast Overpressure, of 8 August 2024.

1-3.4. INTERACTION WITH DWESO. Navy and Marine Corps activities shall comply with the following procedures, respective of inspections by, and correspondence with, the DWESO.

1-3.4.1. DWESO Explosives Safety Management Evaluation Program. The DWESO Explosives Safety Management Program (ESMP) replaced the previous survey process. The ESMP is intended to assess the effectiveness of the Service ESMP program, validate new requirements, recommend revisions to existing requirements, identify trends, and recommend solutions to emerging problem areas. This will be accomplished through data point collection during shore activity evaluations, as well as evaluations of the Navy and Marine Corps explosives safety organizations.

a. The ESMP consists of four program evaluation areas:

(1) Management – organization and staffing, tenant relations, risk, stewardship.

(2) Plans/Policies/Procedures – site planning, master planning, accident prevention programs, explosives safety issuances.

(3) Execution/Operations – potential explosives sites and exposed sites, ranges, demilitarization and destruction, other issues.

(4) Execution/Operations Support – emergency response, inspections, evaluations, audits, surveillance, explosives safety data management.

b. DWESO ESMPs are scheduled on a rotating fiscal year cycle based on Service component. During the DON and USMC fiscal year cycles, the DWESO will conduct ESMPs based on input from Deputy Chief of Naval Operations, Fleet Readiness and Logistics, Director, Logistics (OPNAV (N4L)) and Marine Corps Systems Command (MARCORSYSCOM) PM Ammo. The DWESO will issue a memorandum to the selected activities where an ESMP is scheduled to be performed, providing basic evaluation criteria and itinerary information, as well as a list of anticipated personnel that should be available for interviews during the week. When advised of a forthcoming ESMP, the activity commanding officer shall make arrangements for all necessary assistance to DWESO personnel, to include specific information requested in the notification. Arrangements will include providing station maps showing all ammunition handling and storage locations, appropriately marked with all military construction (MILCON) and other projects which have received explosives safety approval, as well as projects for which approval has been requested and is pending. Shore activities with waterfront facilities authorized for ammunition handling will provide maps showing ammunition handling locations. All maps will show approved, applicable ESQD arcs.

c. At the conclusion of an activity visit, the DWESO evaluation team will provide a synopsis of data collected that identifies possible strengths and/or issues that were identified during their visit. This data will be compiled in a Service report; therefore there is no action on the part of the visited activities, unless notified by NOSSA or OPNAV (N4L). At the conclusion of the Services evaluation cycle, the DWESO will evaluate all the data collected from the various visits, look for trends, and consolidate it into a Service Report that will be provided to OPNAV (N4L) or MARCORSYSCOM for action.

1-3.4.2. Communication with the DWESO. All written communications intended for the DWESO shall be routed via the chain of command and Commanding Officer, NOSSA to OPNAV (N4L). Marine Corps correspondence must be routed via MARCORSYSCOM (PM AMMO). Direct communication with the DWESO is not authorized unless previously directed by the OPNAV or MARCORSYSCOM. Submission requirements for site survey responses and site approval requests are addressed in paragraph 1-3.4.1 and 8-1.2.1, respectively. Written communication initiated by the DWESO, except explosives safety survey notifications citing OPNAV or MARCORSYSCOM as “copy to” addressees, and addressed to any DON command shall be immediately re-addressed to OPNAV (N4L) or MARCORSYSCOM (PM AMMO). Direct communication by telephone, facsimile or electronic mail with DWESO staff members is not authorized unless, initiated by a DWESO staff member or effected with the approval of, and preferably by, the Navy or Marine Corps member or alternate member of the DWESO. No DON presentation, however informal, is to be made to the DWESO chairperson or staff without prior approval from a DON member/alternative member. All such presentations, when approved, will be attended by a DON member/alternate unless attendance is specifically declined.

1-4. RESPONSIBILITIES FOR SAFETY.

The following responsibilities for implementing and maintaining explosives safety at Navy and Marine Corps activities shall be observed.

1-4.1. COMMANDING OFFICER, NAVAL ORDNANCE SAFETY AND SECURITY ACTIVITY. In accordance with OPNAV and Naval Sea Systems Command (NAVSEASYSCOM) directives, Commanding Officer, NOSSA will exercise general supervision over explosives safety throughout the DON. This includes technical supervision over the safety of ammunition, explosives, and related hazardous materials throughout the shore activity and supervision over specific work accomplished by shore stations. Specific work involves preparing, assembling, loading, testing, storing, handling,

shipping, using, treating and disposing, and maintaining ammunition, explosives and related hazardous materials.

1-4.2. DIRECTOR, RISK MANAGEMENT DIRECTORATE, USMC . The Director, Risk Management Directorate (RMC), Headquarters, U.S. Marine Corps, is responsible for the overall administration of the Marine Corps Ammunition and Explosives Safety program. To assist with the administration and oversight of this program, three responsible agents under the general titles of Ground Range Safety, Aviation Operations Explosives Safety and Ground Operations/Marine Corps Installation Explosives Safety have been designated. MCO 5100.29 Volume 8 (series) details the responsibilities of these commands.

1-4.3. COMMANDING OFFICER. For the purposes of this manual, Commanding Generals, Installation Commanders, Officers-In-Charge, and Activity Commanders are synonymous with commanding officer. The responsible party for all authorized actions used throughout this publication is the commanding officer. The commanding officer may delegate authority to the lowest level of competence commensurate with the subordinate's assigned responsibilities and capabilities in accordance with OPNAVINST 3120.32 (series). The commanding officer at Navy and Marine Corps shore activities and shore based Fleet units of the operating forces shall comply with the following requirements.

1-4.3.1. Regional Commands. Naval Region Commanders (REGCOM) are responsible for explosives safety program oversight of, and support to, installations. Region Explosives Safety Program Managers (ESPM) will guide and assist installation ESOs with implementation of an effective explosives safety program. The region ESPM will be appointed in writing, serve as a special staff officer within the Region Headquarters and will have direct access to the region commander.

1-4.3.2. Shore Activity. The commanding officer of a Navy and Marine Corps host activity (that is, the property holder) is responsible for the safety of that establishment. The commanding officer shall take the same active, aggressive leadership in safety that he/she takes in other phases of command responsibility. It is the host activity commanding officer's responsibility to ensure that all personnel, regardless of status, who perform ammunition and explosives operations aboard his/her activity are qualified and certified in accordance with OPNAVINST 8023.24, or MCO 8023.3 (series) for Marine Corps activities. It is the host activity commanding officer's responsibility to designate, in writing, an ESO in accordance with the criteria specified in paragraph 1-4.4.1. It also is the host activity commanding officer's responsibility to require personnel of other agencies, including contractors and tenant commands, while on the facility under his/her command, to conduct their activities in accordance with established safety rules. See paragraphs 1-4.3.3, 1-4.3.4, and 1-4.3.5 for Naval and merchant vessel and tenant command responsibilities, respectively. The commanding officer shall be guided by the provisions, and enforce the mandatory requirements, of this manual. He/she shall initiate those directives and inspections that are necessary for compliance with the rules and regulations described within this manual. The absence of a safety requirement in this manual, or in the references cited, does not necessarily indicate that safeguards are not required. If no existing safety rule or regulation applies, the commanding officer shall submit to NOSSA, and MARCORSYSCOM for Marine Corps activities, full particulars and detailed plans for approval. During the interim, the commanding officer shall exercise necessary action to control the hazard.

1-4.3.3. Naval Vessel Responsibility. The commanding officer of a commissioned Navy ship or other craft that is at a pier or wharf that forms part of a DON shore activity, or is in waters adjacent to a DON shore activity as defined by local regulations has direct responsibility for compliance with all ship and station safety regulations that concern ammunition and explosives within the ship in conformance with orders of the commanding officer of the DON shore activity concerned. Navy ships and ships carrying

DON ammunition shall comply with the safety requirements of this document at any other port facility. More stringent explosives safety requirements imposed by foreign countries will be met when an appropriate international agreement makes compliance mandatory. Ammunition and explosives shall be considered as "within the ship" when the weight of them is carried in whole or in part by the vessel as defined in paragraph 7-6.2.8.

1-4.3.4. Merchant Vessel Responsibility with Ships. For ships other than naval vessels, the commanding officer of the naval shore activity has authority and responsibility for ensuring that the ship complies with all ship and station safety regulations within the ship while it is at a pier or wharf or in adjacent waters as defined by local regulations. Prior approval of NOSSA or higher authority shall be obtained for permission to accept or load merchant vessels other than Military Sealift Command (MSC) controlled vessels, including MSC cargo vessels (USNS), time-or voyage-chartered vessels, and other commercial cargo vessels where space is contracted by MSC.

1-4.3.5. Host-Tenant Activity Relationships. Responsibilities of the host activity's commanding officer, as delineated in paragraph 1-4.3.1, pertain not only to Navy/Marine Corps tenants but also extend to other DoW and non-DoW activities aboard the activity. Tenant activities must comply with standards (for example, safety, security, environmental, construction) that are mandated by the commanding officer of the host activity. Host activity and tenant ESOs must work closely together to ensure that the explosives safety program is effectively implemented at DON activities. All agreements and assignments of responsibilities must be documented in writing. When reimbursement is required, an Intra-Service Support Agreement (ISSA) must be developed. If no reimbursement is required, or in addition to an ISSA, a Memorandum of Agreement (MOA) or a Memorandum of Understanding (MOU), or other formal documentation such as an instruction, must be developed by the host installation that reflects explosives safety roles and responsibilities between the host and all tenants.

1-4.4. SAFETY DEPARTMENT OR OFFICE. The Explosives Safety Officer (ESO) is responsible for reporting the status of the weapons and explosives safety program directly to the commanding officer. The host activity's ESO shall have direct unhindered access to the installation commanding officer on weapons and explosives safety issues. All inspections and reports required by this instruction will be reported to the commanding officer. Naval ESOs shall provide copies of all inspections and reports required by this instruction to the safety department on request. Safety and Occupational Health will support the self-assessment process of explosives and ordnance areas, such as the evaluation of exposure to hazardous materials, noise, machine guarding, etc.

1-4.4.1. Explosives Safety Officer (ESO) Responsibilities. An ESO must be designated in writing by all host and tenant commanding officers whose missions directly involve or support ammunition and/or explosives operations. This designation may be accomplished by a memorandum, or an ISSA, MOA, or MOU as defined in paragraph 1-4.3.5. The ESO may belong to the Region, tenant, or any department other than the department responsible for the conduct of ordnance operations (that is, Weapons/Ordnance Departments, Security, etc.). Organizationally placing the ESO in the same department responsible for conducting ordnance operations can compromise the objectivity and effectiveness of the ESO and deny the commanding officer the benefit of an unbiased risk management assessment. The role of the ESO is to manage the Explosives Safety Program. The ESO will provide the commanding officer with reasoned, informed advice regarding explosives safety standards and acceptable levels of risk. In order to accomplish this role, the ESO assigned outside of the safety department must have direct access to the commanding officer, and the individual must have completed all required training specified in appendix C. The ESO is responsible for:

a. Assuring that personnel involved with explosives operations receive required training.

b. Inspecting active buildings or workplaces as often as necessary, depending on the hazard associated with the operation, but at least annually. Explosive operating buildings that are being used for non-explosive operations need not be inspected. If the buildings are to be reused for explosives operations, an inspection will be performed and the site approval reviewed for compliance with proposed operation. Records of the inspections and actions taken to correct any identified deficiencies will be provided to the safety office on request.

c. Conducting pre-operational checks and line checks of explosive operating lines, in conjunction with safety personnel trained to perform safety analyses, as new systems or processes are implemented. Prior to implementation, the ESO shall ensure that a safety professional reviews any new system or process for incorporation of OSHA requirements. A qualified safety professional is defined in the OPNAVINST 5100.23.

d. Inspecting all explosive storage areas and magazines at least annually to ensure that they comply with explosives safety standards. Provide copies of inspection and corrective action reports to the safety office on request.

e. Assuring all standard operating procedures (SOP) meet the requirements of NOSSAINST 8023.11 (series) and are reviewed by a qualified safety professional for incorporation of OSHA requirements. A qualified safety professional is defined in the OPNAVINST 5100.23.

f. Monitoring the activity's qualification and certification program for compliance with OPNAVINST 8023.24 or MCO 8023.3 (series) for Marine Corps activities, and command policies.

g. Reviewing all site approval documents in conjunction with the safety office and fire department representatives, as applicable, that involve facilities encumbered by or generating ESQD arcs. Ensuring all activity PES and ES site approval data is entered into the Enterprise Explosives Safety (EES) database to include PESs that are not on DON installations. Ensuring the activity's ESQD maps and EES entries are reviewed and validated annually, all PESs and ESs within ESQD arcs are shown, and ESQD arcs are accurate.

h. Reviewing all requests for deviations from established explosives safety standards to ensure that they comply with existing safety directives. Ensuring all deviations involving compensatory measures are communicated to affected Commands and incorporated into appropriate issuances.

i. Inspecting in and around explosive operating and storage areas where maintenance and repair that involve hot work shall be accomplished, and issuing work permits to repair parties, both government and contractor. Paragraphs 4-1.15 and 4-1.16 establish procedures for performing hot work on magazines.

j. Reviewing, in conjunction with the safety officer and fire department representatives, all facility modification drawings and equipment or tooling drawings used for explosive operations to ensure compliance with safety documents.

k. Approving, in conjunction with the safety officer and fire department representatives, the electrical hazard classification for each operating building and maintaining the list in the safety office. The Explosives Safety Officer must inspect, approve and classify the hazardous location.

l. Monitoring a safety program in accordance with paragraph 2-1.4 and command policies to ensure that ordnance display items are inert and do not contain hazardous materials.

m. Conducting accident investigations in accordance with OPNAVINST 5102.1 (series) or MCO 5100.29 Volume 9 (series) and reporting findings to higher authority as required. Maintaining a record listing all accidents with recommendations for preventive measures.

n. Maintaining the activity's explosives safety manual and applicable explosives safety directives.

o. Assigning pier safety loading officers to the pier or wharf area in accordance with paragraph 12-11.1.1.b.

p. Providing a representative and point of contact for activity explosives safety inspections, reviews, and other explosives safety related matters.

q. Ensuring the development and presentation of activity safety training classes adequately address explosives safety practices and principles.

r. Monitoring the facility grounding/lightning protection program.

s. Ensuring an Explosives Safety Self-Assessment (ESSA) is conducted in accordance with enclosure (3) of NOSSAINST 8020.14 (series).

t. Providing oversight on the explosives safety aspects of munitions responses occurring within his/her AOR.

1-4.5. SUPERVISORY PERSONNEL. Supervisors at all levels shall be thoroughly familiar with the provisions of this publication and applicable instructions. They shall act positively to eliminate any potential accident-hazards that exist in operations under their jurisdiction. Supervisors have no authority to waive or alter OPNAV/MCO, NAVSEASYSCOM, or station safety regulations, nor shall they permit violation of these regulations by others.

1-4.5.1. Supervisor Responsibilities. Each supervisor shall be responsible for the following:

a. Ensuring that all processes are conducted in accordance with a command-approved SOP as defined in paragraphs 2-1.1 and 2-1.1.1.

b. Explaining to all employees under his/her immediate supervision the standard safety regulations, industrial hygiene safeguards, and precautions that they shall follow and enforce. Explaining the characteristics of the ammunition, explosives, or other hazardous materials involved as well as the selection, use, and care of the necessary tools, materials, protective equipment and handling equipment. Explaining the hazards of fire, explosion, and other catastrophes that the safety regulations and industrial hygiene requirements are intended to eliminate or reduce.

c. Instructing and training each employee under his/her immediate supervision in the work they will perform, whether instruction is given directly or through experienced operators, until the supervisor is satisfied that the employee is capable of performing the work safely. This instruction shall include complete information concerning magazine location, identification, and the location and use of shelters and bomb-proofs, first-aid kits, firefighting apparatus, guards, personal protective equipment, showers, plunges, and neutralizing solutions.

d. Ensuring that all employees are qualified and certified to perform the job assigned and that their certification is current. Reporting promptly to the immediate superior all employees who in his/her opinion are not qualified for their assigned work.

e. Determining the specific hazards involved and assuring that the appropriate instruction and documents (explosives safety technical manuals, pamphlets, etc.) are available. Assuring that the SOP's relate directly to the ordnance and to the proposed operations.

f. Assisting the command ESO and Health Manager in conducting investigations and preparing the reports of all accidents involving operations, equipment, or personnel under his/her supervision.

g. Identifying all persons who are entering or approaching the area in his/her charge and determining their authority to enter and remain in the area. Exercising the authority to evict any person whose presence or actions, in his/her opinion, are detrimental to safety.

h. Enforcing orders relating to the maximum number of authorized personnel by removing sufficient personnel not regularly employed in the area, or suspending operations and promptly notifying appropriate authorities.

i. Ceasing operations when the amount of explosives exceeds the permissible quantity until the excess amount is removed from the area.

j. Permitting the use of only those tools and handling equipment that are authorized for the operations and used in the manner specified by SOPs or NAVSEA Technical Manuals. Specific tool requirements are provided in applicable SOPs or job sheets.

k. Requiring that tools and handling equipment are properly stored in designated locations when not in use. When a tool is lost or misplaced in an operating area or magazine, stopping operations until the tool is found.

l. Maintaining cleanliness of the operating or magazine area. Maintaining all safeguards and preventing the blocking of safety exits, aisles, and accesses to firefighting equipment.

m. Forbidding major repairs or changes to any magazine, machinery, or equipment in operating and magazine areas containing hazardous materials except in accordance with specific instructions approved by the commanding officer. Enforcing the safety standards in all areas that are under repair although the repair force may not be under his/her order.

n. Prior to securing operations for the day, ascertain that all conditions in the cognizant areas comply with orders relating to operations shutdown/completion. When the operation is not relieved by an incoming shift, making certain that windows and doors are closed and locked, that interior lights and processing equipment are turned off, and that red flags have been removed/taken down at the end of the shift. When his/her operation is relieved by an incoming shift or for any other reason, reporting to the relief any situation that requires immediate attention or that should be kept under observation.

o. Enforcing compliance with safety regulations that concern personal protective clothing and equipment (PPE). Inspecting and maintaining, or replacing if necessary, PPE required for the safe performance of the work for which the person is responsible.

p. Informing his/her immediate supervisor of the areas where lights, guards, or safety appliances are needed or repairs are required, and all areas where sprays, showers, shelters, and exits or passageways should be accessible.

q. Reporting in writing to the safety officer any requests, suggestions, or comments he/she may have about safety standards.

r. Alerting his/her immediate supervisor of the need for explosive ordnance disposal (EOD) personnel to remove defective or suspect ammunition from the work area.

1-4.6. OPERATING PERSONNEL. It is recognized that operating personnel are the first lines of defense for identifying workplace safety hazards when involved in ammunition and explosive evolutions. Accordingly, operating personnel shall:

a. Only conduct operations that are covered by a command-approved SOP as defined in paragraphs 2-1.1 and 2-1.1.1.

b. Read, understand and strictly observe all safety standards, requirements, and precautions applicable to their work or duty.

c. Immediately report to his/her supervisor any of the following:

(1) An unsafe condition, employee actions, or equipment or material that he/she considers unsafe.

(2) Any injury or evidence of impaired health, physical or mental, to themselves or other employees that could preclude them from performing their duties.

(3) The presence of unauthorized personnel in the area.

d. Immediately warn other personnel when they are in danger by known hazards or by their failure to observe safety precautions.

e. Wear or use approved PPE when it is required.

f. Be prepared, in case of an unforeseen hazardous occurrence, to give an audible warning to the other employees and to exercise reasonable caution appropriate to the situation.

1-5. ACTIVITY ADMINISTRATION.

1-5.1. MISSION. The mission of Navy and Marine Corps activities engaged in operations involving ammunition and explosives is to supply serviceable ammunition or explosives to the Navy, Marine Corps, and other agencies or organizations as directed by the appropriate command. The commanding officers are responsible for the effective and safe operation and maintenance of their respective activities.

1-5.2. ISSUANCE OF INFORMATION. Navy and Marine Corps shore activities shall be governed and administered by station instructions and notices. These instructions and notices shall be issued for the information, guidance, and compliance of all personnel. They are meant to supplement and emphasize, not to modify or nullify, regulations and other orders and instructions issued by higher authority. All officers attached to a station, as well as supervisors and other concerned key personnel, shall be required to familiarize themselves with the provisions and requirements of station instructions and notices. They shall use whatever means appropriate, as described by higher command, to ensure that all personnel under their charge or direction comply with activity instructions and notices.

1-5.2.1. Technical Publications. Navy and Marine Corps shore activities that conduct ammunition or explosives operations shall have on file an up-to-date set of ordnance publications, technical manuals, safety manuals, instructions, and other pertinent data that cover all ordnance material, ammunition and

ammunition components applicable to that activity. Activities which assemble or disassemble ammunition shall maintain a complete and current file of drawings that concern the ammunition and its components. The requirement to maintain drawings does not apply to those operations related to build-up, assembly, disassembly, or teardown of aviation munitions for use on aircraft.

1-5.2.2. Standard Operating Procedures (SOP). SOPs to support ammunition or explosive operations shall be developed as described in NOSSAINST 8023.11 (series). See paragraphs 2-1.1 and 2-1.1.1 for details regarding SOPs.

1-5.3. ACCIDENT INVESTIGATION AND REPORTING. All accidents, incidents, or explosive mishaps that involve ammunition or explosives shall be investigated and reported in accordance with OPNAVINST 5102.1 (series) and OPNAVINST 3100.6 (series), if applicable, or MCO 5100.29 Volumes 8 and 9 for Marine Corps activities. An investigation shall be conducted to determine cause and resulting losses, and to formulate corrective measures to prevent recurrences. Information obtained by the investigation shall be reported using the format contained in OPNAVINST 5102.1 (series) or MCO 5100.29 Volume 9 (series) for Marine Corps activities. Fires at shore activities and injuries or deaths associated with these fires shall be reported in accordance with OPNAVINST 5100.23 (series).

1-6. DEVIATIONS FROM EXPLOSIVES SAFETY CRITERIA.

Many situations involving contingency, readiness, and/or operational requirements can be satisfied only by deviating from established explosives safety criteria. The Secretary of the Navy, recognizing this need, has delegated authority to Chief of Naval Operations (CNO) and Commandant, U.S. Marine Corps (CMC) to issue waivers, exemptions and event waivers when strategic or other compelling reasons dictate. CNO and CMC have further delegated authorities for certain waivers, exemptions, and event waivers based on the assessed level of risk. The commanding officer is responsible for requesting the appropriate deviation authority as soon as the need is identified. If a temporary violation of explosives safety criteria occurs that can be corrected within the resources of the activity, the commanding officer shall exercise interim actions necessary to control the hazard. When non-compliance of criteria is related to a site approval request for new construction or major modifications to existing facilities, authorization is retained by the Secretary of the Navy and issued as a Secretarial Certification. Tables 1-1, 1-2, and 1-3 provide a summary of information involved in determining the requirement for and submission of deviations.

1-6.1. WAIVERS. A waiver is written authority to deviate from mandatory explosives safety requirements for the purpose of temporary satisfaction of recurring readiness or operational requirements. It is generally issued for 2 years pending completion of corrective measures to eliminate the waiver requirement.

1-6.2. EXEMPTIONS. An exemption is written authority to deviate from mandatory explosives safety requirements for the purpose of long-term satisfaction of recurring readiness or operational requirements. Exemptions are generally issued for a maximum of 5 years, but will not be granted for a period in excess of the estimated time needed for correction of the deficiency. Exemptions will not be granted unless a program for eventual correction is planned except where authorization to purchase real estate for sufficient ESQD clearances has not been granted; where it is in the best interest of the United States to grant agricultural leases of encumbered land; or where significant impairment of the defense posture of the United States would result.

1-6.3. SECRETARIAL CERTIFICATION. When a new facility cannot receive DWESO approval because of non-compliance with explosives safety criteria and for operational reasons the facility must

be built, a secretarial certification must be requested. Neither waivers nor exemptions can be issued as part of the site approval process.

Table 1-1. Risk Acceptance Authority for Navy Explosives Safety Deviations[1, 2, 3]

Risk Assessment Level[4]	Event Waiver 1 month or less[5]	Event Waiver 1 year or less[5]	Waiver 2 years or less[6, 7]	Waiver and Exemption 5 years or less[6, 7]
Extremely High	REGCOM or Service Component Commander (SCC)	Commander, Navy Installations Command (CNIC) or SCC	OPNAV (N4L) or SCC	OPNAV (N4L) or SCC
High	REGCOM or SCC	REGCOM or SCC	CNIC or SCC	OPNAV (N4L) or SCC
Medium	Installation Commander or SCC	REGCOM or SCC	REGCOM or SCC	CNIC or SCC
Low	Installation Commander or SCC	Installation Commander or SCC	Installation Commander or SCC	REGCOM or SCC

Notes:

1. REGCOM may accept risk for temporary QD violations to construction workers, regardless of risk level.

2. All secretarial certification requests for new construction, at any risk assessment level, must be approved by Assistant Secretary of the Navy, Energy, Installations, and Environment (ASN (EI&E)).

3. SCC has approval authority over operations it directs. For operations planning, training, and execution, refer to CJCSI 4360.01 (series) and applicable geographic combatant commander (GCC) policy. See paragraph 1-6.10.

4. Risk assessment level must be determined in accordance with DWESO Technical Paper (TP)-23, OPNAV M-5100.23 (series), and OPNAVINST 3500.39 (series).

5. Event waivers will not be re-issued. Recurring event waivers must be submitted as waivers.

6. Waivers and exemptions will be evaluated by NOSSA to ensure risk is properly assessed. Refer to figure 1-1 for the submission and endorsement process for waivers and exemptions based on level of approval authority.

7. Any waiver that exceeds 5 years must be resubmitted as a CNO waiver or exemption with justification provided for the corrective action not being completed within the initial estimated timeframe.

WAIVER AND EXEMPTION SUBMISSION PROCESSES

Navy activities seeking approval for waivers, exemptions, and secretarial certifications must submit requests in writing following the processes shown below. Requests must originate from the installation commander and include all required endorsers as 'via' addressees.

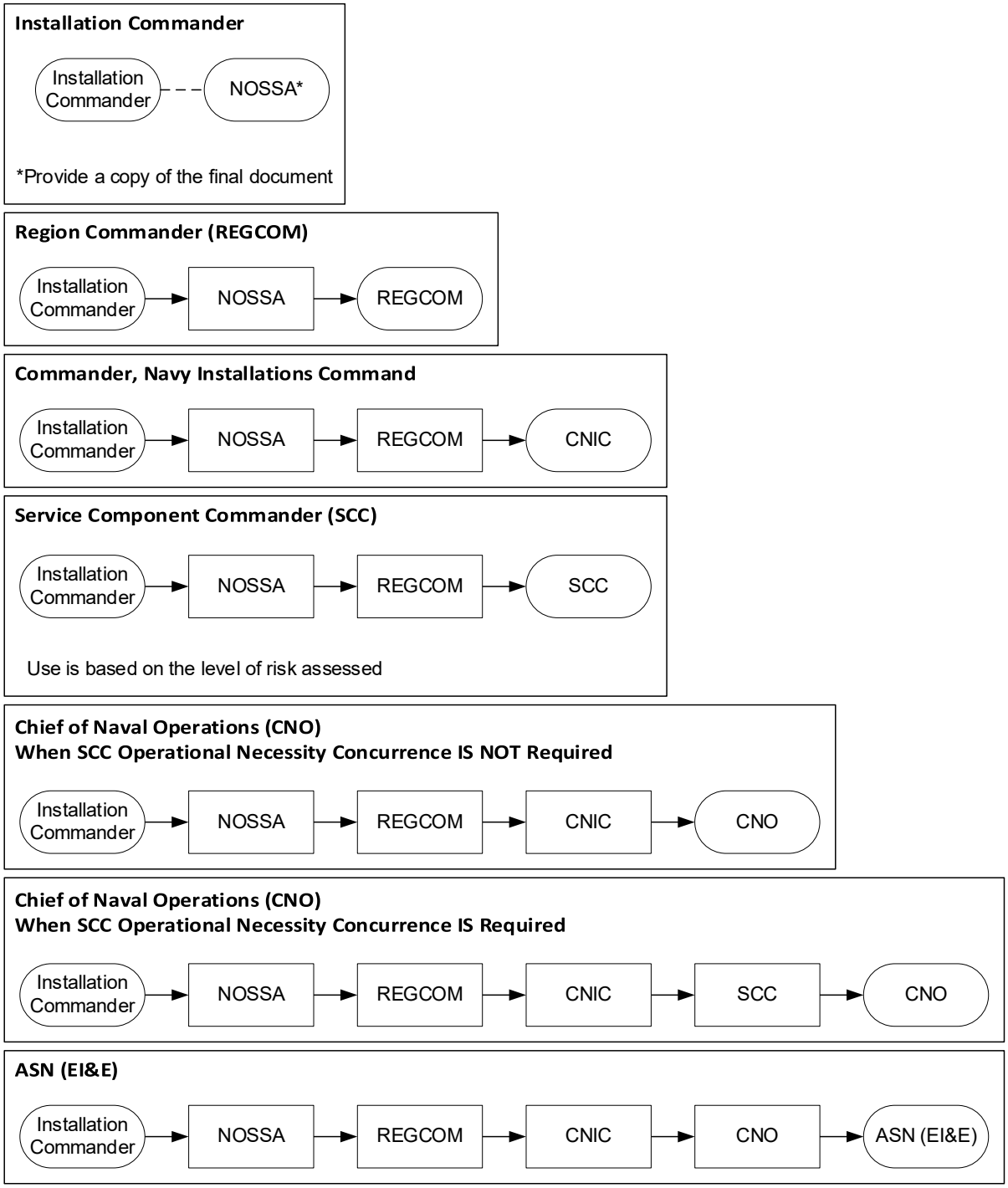

Figure 1-1. Submission Flow Based on Approval Level

Table 1-2. Risk Acceptance Authority for Marine Corps Explosives Safety Deviations[1, 2, 3, 4]

Risk Assessment Level[5]	Event Waiver 1 month or less[6]	Event Waiver 1 year or less[6]	Waiver 2 years or less	Exemption 5 years or less
Extremely High	MARCORSYSCOM or SCC	MARCORSYSCOM or SCC	MARCORSYSCOM or SCC	MARCORSYSCOM or SCC
High	MARCORSYSCOM or SCC	MARCORSYSCOM or SCC	MARCORSYSCOM or SCC	MARCORSYSCOM or SCC
Medium	MARCORSYSCOM or SCC	MARCORSYSCOM or SCC	MARCORSYSCOM or SCC	MARCORSYSCOM or SCC
Low	Regional Marine Corps Installation Command (MCICOM) or SCC	Regional MCICOM or SCC	MARCORSYSCOM or SCC	MARCORSYSCOM or SCC

Notes:

1. REGCOM may accept risk for temporary QD violations to construction workers, regardless of risk level.

2. All secretarial certification requests for new construction, at any risk assessment level, must be approved by ASN EI&E.

3. SCC has approval authority over operations it directs. For operations planning, training, and execution, refer to CJCSI 4360.01 (series) and applicable GCC policy. See paragraph 1-6.10.

4. Marine Corps deviations will be submitted through the Environmental and Explosives Safety Web Portal.

5. Risk Assessment Level will be determined in accordance with DWESO TP-23 and MCO 5100.29 Vol 2.

6. Event waivers will not be re-issued. Recurring event waivers must be submitted as waivers.

Table 1-3. Ship-Based Event Waivers

Event Waiver Condition	Approval Authority	Endorsers	Copy To	Notes
Shipboard Handling at Unsited Location or Exceeding Site Approved Limits	SCC	1. Installation 2. REGCOM 3. Numbered Fleet or Type Command (TYCOM)	OPNAV (N4L) NOSSA Chain of Command	1, 2, 3, 10
Ship Retains Ammo While in Naval Shipyard or Ship Repair Facility	Supervisor of Shipbuilding (SUPSHIP) or SCC	1. TYCOM or ISIC 2. Shipyard Commander 3. REGCOM	OPNAV (N4L) SCC NOSSA	2, 3, 4, 6, 8
Ship Retains Ammo While in Commercial Shipyard	SUPSHIP or SCC	1. TYCOM or ISIC 2. SUPSHIP	OPNAV (N4L) SCC NOSSA REGCOM U.S. Coast Guard Captain of the Port	2, 3, 5, 6, 8, 9, 10
Ship Retains Ammo While in Drydock	SUPSHIP or Numbered Fleet Commander or OPNAV (N4L)	1. TYCOM or Fleet Commander 2. Shipyard Commander 3. REGCOM	OPNAV (N4L) SCC NOSSA REGCOM Shore Commander	2, 3, 7, 8, 9
Ship Retains Ammo While Undergoing Availability or Repair at naval station (NAVSTA)	TYCOM or SCC	1. ISIC 2. NAVSTA Commander 3. REGCOM	OPNAV (N4L) SCC NOSSA	2, 6, 11
Hot Work Aboard Ship-in-Port (Not in Compliance with NAVSEA OP 4)	SCC or OPNAV (N4L)	1. TYCOM, Numbered Fleet Commander, or SUPSHIP 2. Appropriate shore commands 3. ISIC 4. REGCOM 5. NOSSA	OPNAV (N4L) SCC	2, 3, 9, 10

Notes:

1. The host nation must be notified of the potential explosive risk(s) from DoW munitions to host nation personnel and assets, when applicable.

2. Other appropriate activities in chain of command will be included in the ‘copy to’ list.

3. Justification for operational necessity must be provided by the TYCOM unless under the authority of a numbered Fleet, in which case the justification for operational necessity must be provided by the fleet commander.

4. An event waiver is required by SCC if conditions of NAVSEA OP 4 cannot be met.

5. An event waiver is required by CNO (CONUS) or SCC (OCONUS) if the conditions of NAVSEA OP 4 cannot be met.

6. Event waivers are required if ships are to be nested and hot work is to be conducted on any of the nested ships. The event waiver request must accurately describe risk to, and configuration of, co-nested ships. Maintenance and repairs do not require waiver approval for either ship if maintenance or repairs do not entail hot work or taking down fire mains without an alternative back up system.

7. An event waiver approved by OPNAV (N4L) (CONUS commercial yard) or SCC (Naval Shipyard & SRF) must be requested if the conditions of NAVSEA OP 4 cannot be met.

8. For hazard class/division (HC/D) 1.1 F concussion grenades: see paragraph 2-5.1.2.1.

9. OCONUS commercial shipyards require an SCC-approved event waiver.

10. Ships not assigned to a Fleet (pre-commissioned unit) require CNO event waiver.

11. Retention of ammunition onboard ships is not restricted at NAVSTA piers, provided the conditions of NAVSEA OP 4 are met.

1-6.4. DEVIATION SUBMISSION.

1-6.4.1. Requests from Naval Commands. Shore activities seeking explosive safety deviations (i.e., waivers, exemptions, or secretarial certifications) must submit requests through their operational chain of command. The designated risk decision authority will review the operational requirements and justification for the deviation and provide an approval or denial for the request.

a. Navy activities must follow the approval authority outlined in table 1-1 and figure 1-1 as specified in OPNAVINST 8020.14 (series).

b. Marine Corps activities must follow the approval authority outlined in table 1-2, as specified in MCO 5100.29 Volume 8 (series).

c. Activities with active deviations reviewed by a Regional Explosives Safety Review Board (RESRB) must follow the procedures outlined in NOSSAINST 8020.20 (series).

1-6.4.2. Requests for Tenant Commands Belonging to Another Service. Requests for a waiver or exemption for a tenant command belonging to another service located aboard a DON shore activity will provide an operational necessity statement from that service's chain of command.

1-6.4.3. Submission Requirements. Deviation request submissions must include:

a. Request letter on activity letterhead and addressed per the requirements of table 1-1 and figure 1-1 for the Navy and table 1-2 for the Marine Corps.

b. Completed Joint Deviation and Risk Acceptance Document (JDRAD), available from the NOSSA website.

c. Outputs from the Explosion Safety Risk Assessment tools listed in DWESO TP-23 Table 6.1. Only exposed sites (ES) that are in violation of explosives safety siting criteria must be analyzed.

d. Maps showing the ESQD arcs for the PESs and encumbered ESs.

e. The following must also be provided for secretarial certifications:

(1) Protective Construction: Details of any proposed building hardening, window glazing, or other safety enhancements that will affect or improve safety.

(2) Resource Implications: Current projected facility cost and the budget year.

1-6.4.4. Assigning Explosive Safety Deviation Numbers. Deviations will be numbered independently of one another following the naming convention shown in figure 1-2. Modifications to deviations will be indicated by an alphabetical designator following the serial number and automatically supersede preceding deviation requests of the same serial number. Examples follow:

a. The first deviation approved for Naval Weapons Station Earle, if the approval authority is determined to be CNO, in calendar year 1977 would be designated as follows: CNO Waiver WPNSTA Earle W1-77. The second waiver approved for this activity within the same calendar year, would be designated as CNO Waiver WPNSTA Earle W2-77, etc.

b. The first modification to CNO Waiver WPNSTA Earle W1-77 would be indicated as CNO Waiver WPNSTA Earle W1A-77 and would supersede CNO Waiver WPNSTA Earle W1-77. The second modification to this waiver would be CNO Waiver WPNSTA Earle W1B-77, etc. Notice that the last portion of the deviation number, the calendar year in which the deviation was originally requested, does not change.

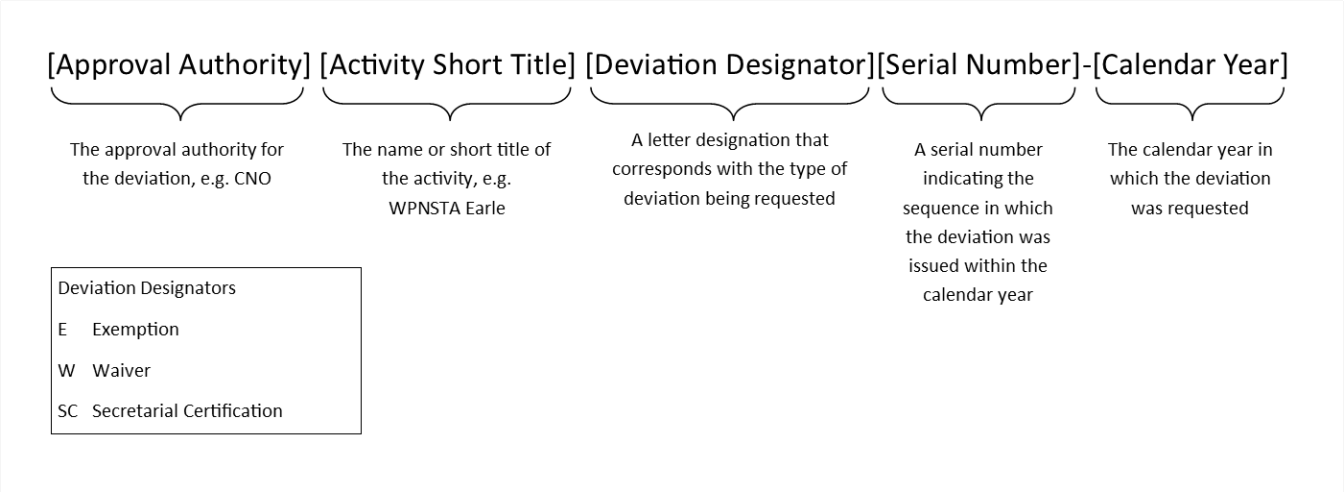

Figure 1-2. Deviation Naming Convention

1-6.4.4.1. An activity may have both a waiver and an exemption with the same year of issuance and serial number, existing simultaneously, although in no way related to each other, for example, WPNSTA Earle W1-77 (waiver) and WPNSTA Earle E1-77 (exemption).

1-6.4.4.2. No waiver or exemption number that has been cancelled will be reused at any time by the same activity.

1-6.4.4.3. Waivers changed to exemptions, or exemptions to waivers, will retain the original year number to convey the longevity of the deviation.

1-6.5. RENEWAL OF DEVIATIONS. Activities requiring a renewal or extension of a deviation must submit a renewal request, including all required documentation, before the current deviation expires.

To ensure timely processing, the request should arrive no later than 3 months prior to the expiration date. For Navy activities, extension requests may be submitted either through the operational chain of command to the approval authority, adhering to the format and procedures outlined in paragraph 1-6.4.3; or via the RESRB to the appropriate authority, adhering to the format and procedures outlined in paragraph 1-6.4.3. The renewal request packages submitted via the RESRB will include a statement, signed by the commanding officer, that either identifies any changes in operations or exposure of personnel and facilities or verifies that no changes have occurred. Renewals for Marine Corps activities will be submitted in accordance with MCO 8020.14. Waiver renewal requests lacking a plan of action and milestones (POA&M) for addressing the deviation will not be processed.

NOTE

Any modifications, alterations, or additions to facilities with deviations that increase risk to personnel must comply with current regulations, or a new or revised deviation must be requested following the procedures described in paragraph 1-6.4. Valid deviations should not be documented as a finding of variance for external reviews or inspections.

1-6.6. CANCELLATION. Should an existing waiver or exemption (other than an event waiver) no longer be required, the command assigned the deviation approval must submit a request for its cancellation. A cancellation request must demonstrate that the need for the deviation has been removed. The request must identify which criteria had been waived or exempted, what operations were permitted by the deviation, and what change occurred to eliminate the need for the deviation. A copy of any pertinent correspondence documenting the change should be included in the request package (that is, site approval, mission change, base closure actions). Cancellation of a waiver or exemption can be accomplished by one of the following methods:

a. A request to a RESRB, following the procedures defined in NOSSAINST 8020.20 (series).

b. For Navy activities, a letter submitted to the approval authority via the operational chain of command and NOSSA.

c. For Marine Corps activities, a request to the Compliance Review Board following the procedures defined in MCO 8020.14 (series).

1-6.7. EVENT WAIVERS. An event waiver is an approved deviation on a case-by-case basis for a particular evolution, issued for a limited period (not to exceed one year) to meet a specific, non-recurring readiness or operational requirement which cannot otherwise be satisfied. Event waivers result from compelling mission requirements, not operational convenience.

1-6.8. REQUESTS FOR EVENT WAIVERS. Per OPNAVINST 8020.14 (series), all Navy shore activities and ships will request event waivers by naval message. Per MCO 5100.29 Volume 8 (series), Marine Corps activities may submit event waivers in letter format. Event waivers must be addressed to the command that will provide the operational necessity certification statement per table 1-1 through table 1-3. Information addressees for the message will be others in the operational chain of command, OPNAV (N4L), NOSSA, MARCORSYSCOM, and appropriate shore commands. SCCs may approve

event waivers to meet their operational needs as outlined in table 1-3. Concurrence of involved shore commands is required.

1-6.8.1. Event waiver requests should be submitted a minimum of 14 days in advance for routine/scheduled port visits or evolutions. Requests for any other requirements should be submitted as far in advance as possible. The date(s) for which the waiver is required must be specified in the message. Dates identified for operations with potentially-changing requirements, such as ship arrivals, should provide a date range that includes an appropriate buffer to prevent the need for extension requests.

1-6.8.2. The authority designated to provide operational necessity certification statement will obtain concurrence from the necessary subordinates in the chain-of-command, and from any involved shore activity, and identify the concurrence in their certification of operational necessity message. In unique situations where expeditious processing is necessary, concurrence may be obtained by telephone or email. For event waiver situations involving multiple services, the following procedures will apply:

1-6.8.2.1. Non-DoW Installations. The lead service component conducting ordnance operations will have the responsibility of submitting the event waiver request. Subordinate U.S. components will provide all information regarding deviations from explosives safety criteria to the lead service component. The event waiver must be issued by the command with that authority for the service submitting the request.

1-6.8.2.2. DoW Installations. The service with the operational necessity will have the responsibility of submitting the event waiver request and their higher headquarters will provide the operational necessity statement. The service responsible for the installation will issue the event waiver, following concurrence endorsements by the installation and all in their chain-of-command.

1-6.9. EVENT WAIVER SUBMISSION REQUIREMENTS. The subject of the message requesting an event waiver should be "Explosives Safety Event Waiver for (command, activity or ship)," as appropriate. Standard Subject Identification Code (SSIC) 8023 will be used. The message must contain the following information:

a. General statement of event waiver requirements.

b. Specific document(s) or table(s) that contain the explosives safety standard(s) to be waived.

c. Specific description of the conditions creating the need for the waiver or exemption.

d. Statement specifying reason(s) why compliance with explosives safety standards cannot be effected.

e. Alternatives examined. Include all possible practical alternatives to solve problem(s) without continuance or issuance of a waiver/exemption, with rationale for each.

f. Mission effect from the maximum credible explosives mishap.

g. Additional or compensatory safety precautions to be enforced during the period of the deviation.

h. When ESQD requirements are involved, provide, as enclosures, map(s) that indicate the distance of on-station and off-station encumbrances. Maps must be to a scale not less than 1-inch =

400 feet. If a map is necessary for a complete review of the event waiver, it should be forwarded directly to the command approving the waiver.

i. Requests for event waivers, in overseas locations where Explosives Safety Quantity-Distance (ESQD) arcs will extend beyond the station boundary, must include an endorsement from the appropriate shore activity, or U.S. Defense Attaché Office (USDAO), that can provide information on the approximate number of buildings, public traffic routes and people inside the proposed off-base ESQD arcs.

1-6.9.2. Request for Modification. Requests for modifications to event waivers will be submitted in the same manner as the original request. The first modification to CNO Event Waiver NAVBASE San Diego 005-2026 would be indicated as CNO Event Waiver NAVBASE San Diego 005A-2026 and would supersede CNO Event Waiver NAVBASE San Diego 005-2026.

1-6.9.3. Cancellation. Event waivers are considered to be cancelled when the short-term evolution for which they were issued is completed.

1-6.10. MUNITIONS RISK MANAGEMENT ASSESSMENTS UNDER CJCSI 4360.01 (SERIES).

1-6.10.1. Explosives Safety and Munitions Risk Management for Joint Operations, Planning, Training, and Exercises. Functional Combatant Commanders and SCCs delegated risk acceptance decision authority by a GCC, can under the scope of CJCSI 4360.01 (series), approve operations that do not meet the criteria of this manual. In these cases, Navy or Marine Corps commands acting as the executive agent, or Base Operating Support-Integrator (BOS-I) will prepare waiver and exemption requests in accordance with paragraph 1-6.4, satisfying the Explosives Safety and Munitions Risk Management (ESMRM) Munitions Risk Assessment (MRA) requirements of CJCSI 4360.01 (series), unless operations occur at non-enduring locations, or enduring locations that do not have established explosives safety programs.

1-6.10.2. Operations at Enduring Locations with Established Explosives Safety Programs. Requests will be submitted per table 1-1 for approval under the authority of OPNAVINST 8020.14 (series) and the procedures defined in paragraph 1-6.4. Marine Corps commands will submit their requests in accordance with MCO 5100.29 Volume 8 (series). The need to continue these operations will be evaluated following paragraph 1-6.4.

1-6.10.3. Operations at Non-Enduring Locations and Enduring Locations that do not have Established Explosives Safety Programs. Navy or Marine Corps commands acting as the BOS-I or executive agent will request support in developing an ESMRM MRA from NOSSA or MARCORSYSCOM, respectively. The resulting ESMRM MRA will be submitted through the operational chain of command for validation of operational requirements and evaluation prior to submission to the GCC, or delegated risk acceptance decision authority, for approval. Marine Corps commands will submit their requests via MARCORSYSCOM (PM AMMO). OPNAV (N4L) will be provided copies of all requests. Operations that exceed 24 months must be reevaluated to determine if conditions have changed to the extent that they need to be reissued, or when there is a change in executive agent or BOS-I commander.

1-7. INTENDED USE OF THIS MANUAL.

The following paragraphs establish guidelines for the use of the safety regulations and instructions within this manual.

1-7.1. APPLICABILITY. The safety regulations and instructions within this manual are applicable to all Navy shore, and unless otherwise specified, Marine Corps activities. This includes assigned units that conduct operations involving ammunition, explosives, and related hazardous materials in accordance with the applicable portions of United States Navy Regulations 1973 (current edition), OPNAVINSTs 5100.8 (series) and 8020.14 (series), and MCO 5100.29 Volume 8 (series) for Marine Corps activities. This manual is also applicable to Government-owned, contractor-operated, and contractor-owned facilities, when specified in the contracts. General historical and functional data about Naval ammunition can be found in NAVSEA SW010-AB-GTP-010. Navy Occupational Safety and Health requirements specified in OPNAVINST 5100.23 (series) are also applicable to explosives safety operations in addition to the requirements of this manual.

1-7.2. MANDATORY AND ADVISORY REGULATIONS. The requirements in this manual that use the commands 'shall,' 'will,' or 'must' are mandatory, unless they are specifically waived or exempted by the CNO in accordance with the provisions in OPNAVINST 8020.14 (series). Advisory requirements are those in which 'may' or 'should' are used. These advisory requirements shall be followed unless exceptions are authorized in writing by the shore station commanding officer.

1-7.3. SUPPLEMENTARY INSTRUCTIONS. It is a basic responsibility of the commanding officer to issue supplemental instructions to cover circumstances when safety requirements are judged inadequate or are considered to be necessary, but are not provided by this manual. The commanding officer shall take the necessary action to control the hazard as indicated in paragraph 1-4.3.

1-7.4. CLARIFICATION OF REGULATIONS. Initial requests to obtain the exact meaning of a regulation, or request for interpretation shall be forwarded to NOSSA, Naval Ordnance Safety and Security Activity, Atlantic/Pacific via the activity's chain of command. Interim measures that will provide optimum safety shall be taken at the discretion of the commanding officer until any conflict or clarification issues are resolved.

1-7.5. CHEMICAL WEAPONS CONVENTION. In accordance with the Chemical Weapons Convention (CWC) to which the United States is a State Party, the treaty thereof, and 15 CFR Parts 710 through 729, the Department of the Navy does not develop, produce, otherwise acquire, stockpile, or retain chemical weapons. Any regulations or criteria in this volume pertaining to toxic or other hazardous chemicals are in reference to the following situations:

a. The possibility of recovering prohibited chemical ammunition or chemical weapons as Captured Enemy Ammunition (CEA) or from coalition or host-nation partners.

b. Former munitions sites predating the ratification by the United States of the CWC where chemical agent or chemical weapon contamination may still exist.

c. Ammunition containing toxic chemicals and their precursors intended for purposes not prohibited under the CWC, or that contain toxic chemicals that are not specifically designed to cause death or other harm through the toxic properties of those chemicals such as riot control agents, smoke and flame-producing items or incendiaries.

1-8. DEFINITIONS.

The definitions of terms and abbreviations commonly used in conjunction with ammunition, explosives, and other hazardous materials, including operations associated with these materials appear in appendix A. They are intended to reduce ambiguity and to provide uniformity of description and interpretation of technical information throughout this manual.

1-9. REFERENCE DOCUMENTS.

A list of documents that contain all types of technical or administrative, mandatory or advisory, and general or specific information and data applicable to and referenced throughout this publication is presented in appendix B. Those applicable documents, together with station instructions and notices, paragraph 1-5.2; technical publications, paragraph 1-5.2.1; and SOPs, paragraph 1-5.2.2; shall be updated and maintained in libraries as a collection of current information that pertains to all phases of ammunition and explosives operations. These documents are essential for complete understanding of the safety regulations contained within this manual.

1-10. REPORTING DEFICIENCIES IN THIS MANUAL.

Training activities, supply points, Naval Weapons Stations and other shore activities are requested to arrange for the maximum practical use and evaluation of NAVSEA technical manuals. All errors, omissions, discrepancies, and suggestions for improvement to NAVSEA technical manuals must be submitted via one of the following methods:

1-10.1. UNCLASSIFIED TM FEEDBACK PROCESS (PREFERRED).

a. Submit feedback directly through the Model Based Product Support (MBPS) website at. https://mbps.navseaplm.navy.mil/Windchill/

b. To request an MBPS account submit a ticket to the National Help Desk (NHDSM), https://nhdsm.navair.navy.mil/ (DoW PKI Certificate required).

1-10.2. COMPLETED NAVSEA 4160/1, TECHNICAL MANUAL DEFICIENCY/EVALUATION REPORT.

a. Completed NAVSEA 4160/1 forms may be emailed to nav_helpdesk.fct@navy.mil. To expedite your submission, carbon-copy (cc) the NOSSA Explosives Safety Technical Manuals mailbox at NOSSA_ESTM@us.navy.mil.

b. Completed NAVSEA 4160/1 forms may be submitted via mail to Commanding Officer, NAVSURFWARCENDIV Port Hueneme (NSDSA Code 310 TMDERs), 4353 Missile Way BLDG 1389, Port Hueneme, CA, 93043-4307, with a copy mailed to Commanding Officer, Naval Ordnance Safety and Security Activity (N10G), 3817 Strauss Avenue, Suite 108, Indian Head, MD 20640-5151.

NOTE

All feedback submitted, either via MBPS feedback submission or completed NAVSEA 4160/1, must be unclassified.

1-11. DATE OF PUBLICATION.

The publication date of this manual, and its revisions and changes, as shown on the title page, is the estimated date of distribution. However, the manual, revision, or change is effective upon receipt, regardless of the date shown on the title page.

CHAPTER 2
GENERAL REQUIREMENTS, STANDARDS, AND PRACTICES

2-1. GENERAL SAFETY REGULATIONS.

This chapter covers the basic safety requirements, standards, and practices to be observed when preparing, handling, storing, shipping, and treating ammunition, explosives, and related dangerous articles. Everyone working with or near any form of explosives should realize that explosives are dangerous and meant to explode, deflagrate, or burn vigorously. Even the latest insensitive explosives may detonate if subjected to imprudent or improper handling, causing considerable damage or loss of life. Analyses of ammunition and explosives accidents show that avoidable circumstances existed in nearly every instance when the cause of the accident could be determined. Complete understanding and strict observance of specified safety regulations are necessary to eliminate the unsafe acts and conditions that cause preventable accidents. Likewise, any repeated work, no matter how dangerous, can become routine and lead to carelessness. Therefore, constant employee attention and close supervision must be maintained to prevent accidents during operations that involve ammunition and explosives. The two most important considerations in handling ammunition and explosives are safety and responsibility. The individual performance of personnel shall never be evaluated on a competitive basis to a degree that would encourage shortcuts in safety procedures. The following safety regulations shall be observed by personnel involved in ammunition and explosives operations.

2-1.1. WRITTEN OPERATING PROCEDURES. All Department of the Navy (DON) shore activities shall develop written operating procedures prior to starting any operation involving ammunition or explosives. These procedures shall be officially documented and shall be approved by the installation commander or individual delegated authority. The written procedures shall ensure that each ammunition or explosives process complies with the technical requirements, explosives safety standards, personnel qualification and certification requirements, Navy Occupational Safety and Health (NAVOSH) standards, federal, state and local environmental requirements and security and physical security directives. In addition, development of procedures will ensure that activities clearly identify and minimize existing and potential hazards inherent in ammunition and explosives processing and, where necessary, develop, implement and rehearse emergency response, evacuation and contingency plans.

2-1.1.1. Types of Written Operating Procedures. NOSSAINST 8023.11 (series) prescribes the guidance for writing Standard Operating Procedures (SOP) for applicable ammunition and explosive processes at shore activities. For ammunition or explosives processes not covered under NOSSAINST 8023.11 (series), other types of written operating procedures; that is, Maintenance Requirement Cards (MRC), weapon loading checklists, Depot Maintenance Work Requests (DMWR), and Standard Job Procedure (SJP), are acceptable upon written approval from the installation commander.

2-1.2. HAZARD ANALYSIS AND CONTROL. MIL-STD-882 (series) establishes a systemwide approach to safety as the principal requirement. MIL-STD-882 (series) is mandatory for use by all Department of Defense activities and has been implemented by the DON. It requires a methodical and disciplined approach to hazard control and emphasizes the need to achieve weapon system safety through design. The Weapon System Safety Guidelines Handbook, NAVSEA SW020-AH-SAF-010 provides guidelines for applying system safety techniques to assess and control explosive hazards during production and life cycle operations such as manufacturing, explosives loading, component buildup, renovation, demilitarization, and routine treatment of ammunition and explosives.

Specifications for hazard control methods and procedures for instituting hazard monitoring and corrective action programs are also included in NAVSEA SW020-AH-SAF-010. These guidelines apply to all activities that involve explosive operations, ordnance design, and production, including the review, inspection, and approval of such operations. The guidelines presented in both MIL-STD-882 (series) and NAVSEA SW020-AH-SAF-010 should be used in preparation of SOPs.

2-1.3. REPORTING UNSAFE CONDITIONS. All unsafe conditions or unsafe acts in and around Potential Explosion Sites (PES) shall be immediately corrected if possible and promptly reported by employees to their immediate supervisor. The supervisor shall act positively to eliminate and prevent recurrence of potential accident hazards.

2-1.4. UNAUTHORIZED USE OF AMMUNITION. Ammunition and explosives shall be used only for the purpose and in the guns or equipment for which they were designed. Ammunition and explosives shall not be manufactured, purchased, or assembled for use in displays, demonstrations, or tests unless their use is authorized by the Naval Ordnance Safety and Security Activity (NOSSA). Marine Corps activities should contact Marine Corps Systems Command (MARCORSYSCOM) (PM AMMO). Refer to paragraph 2-1.11 for regulations on the use of explosives or pyrotechnic devices for displays, demonstrations, or similar purposes.

2-1.4.1. Tampering with Ammunition, Ammunition Components, and Explosives. Any tampering with ammunition, ammunition components, and explosives is strictly prohibited. The removal of ammunition or explosives during manufacture or processing from the operating line is prohibited unless authorized by the supervisor. Excluded from this requirement is the handling and removal of normal samples required for quality control and other inspection requirements.

2-1.4.2. Service Ammunition. Service ammunition contains explosive material and is intended for combat use. However, use of service ammunition in support of training requirements is routine and a necessary part of maintaining operational readiness as well as feedback for surveillance programs. Service ammunition shall not be a substitute for inert ammunition when inert ammunition is required. See paragraph 2-1.4.4 for intended uses for inert ammunition. Service ammunition is identified by Department of Defense Identification Code/Navy Ammunition Logistic Code (DoDIC/NALC) and National Stock Number (NSN).

2-1.4.3. Practice Ammunition. Practice ammunition contains explosive material and is intended for operational training. Practice ammunition shall not be used in lieu of inert ammunition. Practice ammunition is identified by DoDIC/NALC and NSN.

2-1.4.4. Inert (Dummy) Ammunition. Inert ammunition does not contain any explosive material. Only inert ammunition and components shall be used for classroom training, displays (public or otherwise), museum displays, public functions and patriotic occasions. Inert ammunition used for these purposes shall not contain other hazardous items such as batteries of any type, high pressure vessels, or other devices such as spring high tension assemblies which may injure personnel. Inert ammunition and components should be used for operational training to the maximum extent possible. Inert ammunition is identified by procedures described in paragraph 2-1.4.7.

2-1.4.5. Inerting Ammunition. Inerting ammunition requires the complete removal of all explosive material. Ammunition may only be inerted and certified as such if it is to be used for official command-sponsored purposes such as training, museum displays, demonstrations, public functions or patriotic occasions. The inerting process shall be performed by personnel certified in accordance with OPNAVINST 8020.14 (series). Methods employed for the removal include: disassembly, physical removal, replacement of explosive material or components, activation or firing of the item, chemical

neutralization, flashing/thermal treatment and washout. The complexity of the ammunition may require that it be returned to a maintenance or manufacturing facility for inerting. If components are removed and sent to another activity for inerting, they shall be certified inert in accordance with paragraph 2-1.4.6 prior to return. Marine Corps activities shall comply with the additional requirements of Marine Corps Order (MCO) 3571.2 (series) and NAVMC 3500.66 (series).

2-1.4.6. Inert Ammunition Certification and Control. Ammunition that is manufactured empty or with inert material installed does not require certification. In addition, ammunition that has been inerted by a designated manufacturing or maintenance facility does not require certification as long as the requirements of paragraph 2-1.4.7.b are met. All other ammunition that has had explosive material removed and left empty or replaced with inert material shall be certified inert.

NOTE

Inert certification applies only to ammunition that is inerted and retained for training, displays, and other command-sponsored purposes. For certification of material potentially presenting an explosive hazard (MPPEH) as safe or as hazardous, refer to paragraph 13-15.5.

Certification is a determination through examination that there is no explosive material remaining in the ammunition or component. The examination may be a visual or nondestructive testing method such as X-ray. The certification shall be performed by personnel qualified for Explosive Ordnance Disposal (EOD) or personnel who the commander or responsible authority certifies as technically qualified to make such a determination. Activities shall maintain a record of all inerted ammunition currently held by the activity. The following data, as a minimum, shall be recorded:

a. Item description, DoDIC/NALC and NSN;

b. Assigned serial number;

c. Certifying official's name;

d. Certifying official's signature;

e. Date certified;

f. Method by which the item was determined to be inert;

g. Item location;

h. Disposition (and shipping/receiving document numbers if applicable).

Figure 2-1 is an example of a form that may be used for recording the data. If electronic media is used, provisions must be made to print a hard copy when required and controls must be in place for signature protection of the certifying official.

NOTE

Items certified in accordance with requirements previously published in this manual do not require data item f. or the shipping receiving document numbers required in data item h.

2-1.4.7. Identification of Inert Ammunition. Inert ammunition is identified by DoDIC/NALC and NSN with the exception of Cartridge Actuated Devices (CAD) and Propellant Actuated Devices (PAD), which are identified in accordance with NAVAIR 11-100.1.1. In addition, some inert ammunition is identified by a serial number on the item that is traceable to the Record of Certification and Identification described in paragraph 2-1.4.6 and shown in figure 2-1. Ammunition that is not identified correctly shall be considered suspect and placed in an approved explosives storage magazine until its condition can be verified. The following inert ammunition identification requirements apply:

a. With the exception of CADs and PADs, all ammunition and components that are manufactured empty or with inert material installed are ordered, stocked, and issued through the Navy ammunition distribution system and shall be physically identified by part number or DoDIC/NALC and NSN. They shall be inert color-coded as described in NAVSEA SW010-AF-ORD-010/NAVAIR 11-1-117. A Record of Certification and Identification is not required for this ammunition.

b. Ammunition and components that have been inerted by a manufacturing or maintenance facility designated by the ammunition program manager to perform the inerting; that are color coded as inert items in accordance with NAVSEA SW010-AF-ORD-010/NAVAIR 11-1-117; and that are assigned a new DoDIC/NALC to identify them as inert, do not require the Record of Certification and Identification described in paragraph 2-1.4.6.

c. Except for the ammunition and components described above, all ammunition and components that were manufactured with any explosive material installed and that had all the explosive material removed and left empty or replaced with inert material shall be physically identified as follows:

(1) The original color code, MK/MOD, and other identification shall not be removed. This will assure that the item reverts to its original explosive identification if traceability is lost to the Record of Certification and Identification described in paragraph 2-1.4.6. Inerted items that have had their color changed to signal an inert round in accordance with policy previously published in this manual and NAVSEA SW010-AF-ORD-010/NAVAIR 11-1-117 do not have to have the explosive color code reapplied.

(2) The item shall be identified by serial number. The serial number shall consist of the unit identification code (UIC) or routing unit identification code (RUC) of the activity where the item was certified inert, and a unique number. The method of identification, in order of precedence, shall be by metal engraving tool, steel stamping, or indelible ink, or a locally produced label. Examples of serial number identification are N00109-1, N00109-2. Items such as inert small caliber primers, that are too small for physical serial number identification shall be accompanied by a hard copy of the data required in paragraph 2-1.4.6. Items identified with the serial number preceded by the three letter activity identifier; e.g., Naval Weapons Station Earle (NWS) as previously required by this manual, do not require re-identification with the UIC. If the item is transferred to another activity, it is not necessary to re-certify or re-identify with the new activity UIC. When transferring items a copy of the Record of Certification and Identification shall accompany the item and remain on file by the receiving activity as described in paragraph 2-1.4.8.

RECORD OF CERTIFICATION AND IDENTIFICATION

COMMAND

DESCRIPTION DODIC/NALC NSN	SER. NO.	NAME CERTIFYING OFFICIAL	SIGNATURE CERTIFYING OFFICIAL	DATE CERTIFIED	METHOD OF CERTIFICATION	ITEM LOCATION	DISPOSITION DOCUMENT NUMBERS

Figure 2-1. Record of Certification and Identification

2-1.4.8. Shipping and Receiving Inerted Ammunition. Ammunition that has been inerted and certified shall be shipped with a copy of the Record of Certification and Identification. Receiving activities shall: (1) verify that the received item matches the Record of Certification and Identification, (2) retain the record, and (3) maintain traceability between the inert ammunition and the Record of Certification and Identification.

2-1.4.9. Experimental Work. Experimental or test work, other than, routine testing, shall not be undertaken in operating buildings or magazines without prior written authority from NOSSA or as authorized under the scope of appendix F. When authorized, this work shall be performed with as few people present as possible in compliance with paragraph 7-7.1.

2-1.4.10. Materials of Unknown Stability. No ammunition or explosives with unknown stability shall be stored with other materials of unknown stability or with ammunition and explosives of proven stability. Segregated storage shall be provided until the stability of the material in question has been determined and approval for appropriately marked storage has been granted by NOSSA.

⚠ WARNING

Ammunition reclassified as unsafe to handle shall not be moved or inspected. Notify EOD personnel immediately.

2-1.4.11. Ammunition Requiring Special Handling. All personnel handling ammunition shall be especially alert for evidence that the ammunition requires special handling. NAVSUP P-801 lists ammunition that is unsafe to handle, or which may require special handling, use, or application. To ensure that only safe ammunition items and procedures are used, refer to NAVSUP P-801 prior to operations involving ammunitions and explosives.

2-1.4.12. Reclassification. Reclassification may occur while ammunition is in transit and it is especially important that the status of received ammunition is verified against applicable documents. NAVSUP P-805 provides the receipt inspection requirements for DON conventional ammunition and includes inspection criteria to assure that ammunition is safe. Damaged or leaking containers, unusual odors or sounds, unusual centers of gravity damage to the conveyance or adjacent ammunition, and annotations and certain defect codes on the ammunition or associated paperwork is all evidence that the ammunition requires special handling. Ammunition requiring special handling shall be inspected immediately by personnel qualified to determine the safety of the ammunition and the specific handling required. If, at any time, a malfunction or defect could result in injury, death or damage if not corrected immediately, all unnecessary personnel shall retreat to the location specified in the SOP until the ammunition is safe. Ammunition shall not be moved or handled until the deficiency is corrected and the item is determined to be safe for movement (unless not moving the ammunition increases the hazard). Ammunition that is unsafe and presents an immediate hazard shall be dispositioned by Explosive Ordnance Disposal (EOD) personnel. Disposition instructions for all excess/or unserviceable ammunition and explosives shall be provided by the Designated Disposition Authority (DDA). Request for disposition instructions shall be originated by the owning unit in accordance with NAVSUP P-801.

2-1.4.13. Non-DoW Ammunition and Explosives, Including Commercial or Foreign. Non-Department of War (DoW) ammunition and explosives including commercial and foreign shall not be handled or stored at Navy or Marine Corps activities unless specifically authorized by the Office of Secretary of Defense, OPNAV (N4L), NOSSA, or MARCORSYSCOM. Military or civilian personnel or military facilities used during peacetime civil ordnance-related emergencies, such as EOD operations or safe haven operations, are exempt from this requirement. Non-DoW ammunition and explosives which have not been qualified for Navy and Marine Corps use are also exempt from analysis or processing up to

qualification testing of the next higher assembly at DoW research and development facilities, engineering analysis facilities, and pilot plant processing facilities. NAVSEAINST 8020.5 (series) provides procedures for the interim qualification of DoW and commercial or foreign high explosives, propellants, and pyrotechnics, and final (type) qualification as Navy or Marine Corps ammunition. For storage and handling purposes, non-DoW ammunition and explosives are divided into two categories: (1) Non-DoW-developed ammunition and explosives that are owned by the DoW, and (2) any other ammunition and explosives that are not owned by the DoW. All requests for storage of non-DoW-developed or non-DoW-owned ammunition and explosives at Navy activities must be submitted to NOSSA for review and appropriate action, or MARCORSYSCOM for Marine Corps activities. Approval levels are based on the following criteria:

a. Non-DoW-developed ammunition and explosives that are owned by the DoW: the request for storage authorization must be sent to NOSSA or MARCORSYSCOM for approval. Examples include: commercial fireworks or explosives used for ceremonial displays; commercial explosives used for quarrying or demolition operations; and ammunition owned by service members and their dependents. The following are exempt from this requirement: non-DoW-developed items used on DoW-owned or contracted commercial aircraft and small craft, including fire extinguishing cartridges with or without bottle assemblies, electric batteries with explosive initiating elements, blank small arms ammunition used in training, Hazard Class/Division (HC/D) 1.4 ammunition used in the station Bird Aircraft Strike Hazard (BASH) program, life-saving appliances and kits containing inflation devices, pyrotechnic signal flares, matches, or limited quantities of other hazardous materials (such as Safety of Life at Sea (SOLAS) materials) as well as hazard Class/Division 1.4S (<.27 caliber) cartridges for explosive-actuated power tools. Assigned Department of Transportation (DOT) hazard classifications may be used for transportation and storage of exempt items, in lieu of interim or final DoW hazard classifications. This exemption does not include any applicable requirements for system safety, Hazards of Electromagnetic Radiation to Ordnance (HERO), Electrostatic Discharge, Qualification of Energetic Materials, or other requirements that may be associated with service use.

b. Ammunition and explosives not owned by the DoW: the request for authorization must be submitted to NOSSA, or MARCORSYSCOM for Marine Corps activities, at least 60 days in advance of the storage or handling date to provide sufficient time for processing the request via the chain of command for final approval by the appropriate level in accordance with Title 10, United States Code, Section 2692, as amended by Public Law 105-85, DoD FY98 Authorization Act. Examples of materials in this category that can be approved by NOSSA or MARCORSYSCOM include: storage of local law enforcement ammunition; Morale, Welfare, and Recreation (MWR) ammunition; explosives used by civil authorities in peacetime civil emergencies or in support of training for such emergencies; Foreign Military Sales (FMS) ammunition; North Atlantic Treaty Organization (NATO) or other foreign military ammunition in support of mission or training operations; and, explosives brought onto an activity, in order to perform a service for the DoW. The following are exempt from this requirement: HC/D 1.4 BASH and security force ammunition used by non-DoW contracted personnel on a DoW station. Examples of material that must be approved by the Secretary of the Navy or Secretary of Defense, include: temporary storage or disposal of recovered civilian explosives to protect the public; disposal of excess explosives generated at a non-DoW facility under a DoW contract; and, storage of non-DoW explosives in support of a commercial operation.

c. For further information on storage and handling of non-DoW ammunition and explosives, paragraph 11-8.15.8 provides storage requirements for authorized, DoW-owned commercial explosives. Paragraph 2-1.11.1, provides requirements for requesting authorization to store or use commercial fireworks. Paragraph 12-5 provides shipping requirements for non-DoW explosives.

d. Approval procedures and siting requirements for non-DoW explosives operations on DON activities are addressed in paragraphs 8-1.2.7 and 7-13.20 respectively.

2-1.5. HOUSEKEEPING. The following provisions shall be observed when conducting housekeeping activities in all areas where ammunition and explosives are, or intended to be present.

2-1.5.1. General. Magazines and magazine areas, operating buildings, and all other buildings within explosives areas, including piers and wharves, dunnage yards, and transfer facilities, shall be kept clean and orderly at all times. A high standard of cleanliness and order is one of the most important factors in fire prevention where ammunition, explosives, and related hazardous materials are present. A regular cleaning program shall be initiated and executed as frequently as required. General cleaning should not be done while hazardous operations are being performed. Ammunition and explosives need not be removed from the building prior to cleaning if no exposed explosives are present. Refer to paragraphs 4-1.7 and 4-1.8 for additional detailed requirements for housekeeping and fire prevention in hazardous areas.

2-1.5.2. Aisles and Safety Exits. The aisles in buildings that contain ammunition or explosives shall be kept clear. Safety exits such as doors and their outside passageways, ramps, and stairways shall not be blocked. Doors and locks shall be kept in good working order. During operating hours, when work is underway or scheduled in any building area, doors shall be fastened only with anti-panic catches or approved quick-acting devices that shall be kept in good working order with exception of requirements specified in paragraph 7-12.12. Requirements for exits from magazines are described in paragraph 11-3.2.

2-1.5.3. Accessibility of Safety Equipment. Access to safety equipment, such as fire alarm stations, fire hydrants, fire extinguishers or hoses, protective clothing lockers, safety showers, thermometers, building and equipment electrical switches, the local fire bill, the sprinkler system and its shutoff valve and pressure gauges, first-aid kit locations, and similar safety equipment, shall not be blocked. The locations of safety equipment shall be appropriately and conspicuously marked to indicate the equipment's accessibility.

2-1.5.4. Tools. When not in use, tools shall not be left on floors, decks, platforms, scaffolds, stairs, ladders, ledges, rafters, or on the moving parts of machines or equipment. After use, tools shall be collected and returned to the lockers, cribs, bins, storerooms, or other locations designated for their storage. Handling gear shall be neatly arranged and shall be restowed when not in use.

2-1.5.5. Clothing Lockers. Clothing not worn during working hours shall be kept in approved clothing lockers in designated locations only. Work clothes shall be maintained and used as described in paragraph 2-4.

2-1.5.6. Floors. Floors shall be kept clean and free of stains such as those caused by exudation of explosives; oil, grease, or other materials that tend to make them slippery; protruding nails, splinters, holes, loose boards and any items which constitute tripping hazards. Floors shall not have cracks or crevices where explosives might lodge. Such defects should be repaired as soon as possible. Refer to paragraph 4-1.8 for requirements on the use and selection of floor cleaning and protecting materials. Design and construction requirements for floors in various types of explosives facilities are given in the appropriate paragraphs of chapter 8.

2-1.6. HUNTING AND FISHING. Hunting and/or fishing are permitted in explosives storage and operating areas of DON shore activities under carefully controlled conditions that do not endanger life, property, or hazardous materials. All hunting and fishing plans, procedures, and policies must conform

to all applicable State and Federal regulations and shall be approved by the activity commanding officer. The commanding officer may impose more stringent controls based on local requirements. A process shall be established to indoctrinate all sportsmen such that they are familiar with; the area(s) they will be using; procedures they will follow in case of an emergency; actions that will result in a revocation of their permit.

2-1.6.1. Permits. Written permits are to be issued by the activity commanding officer to personnel authorized to hunt and/or fish.

2-1.6.2. Maps. A map shall be issued to each sportsman that clearly defines entrance/exit routes, hunting/fishing and no-hunting/no-fishing areas, the direction of fire, weapons and ammunition permitted, and any other restrictions. Any sportsman who is found hunting or fishing outside an authorized hunting or fishing area or who is using his/her weapon in a manner that may endanger personnel or property shall be reported to the activity commanding officer.

2-1.6.3. Weapons. Rifles, shotguns, handguns, and bows and arrows are approved –for hunting, consistent with State and Federal regulations. In the magazine area, weapons shall not be fired in the direction of magazine doors.

a. Small arms ammunition with a muzzle velocity greater than 2,300 feet per second shall not be used within a naval activity that contains explosive areas or facilities. All rifles and shotguns that use a cartridge having a velocity not exceeding 2,300 feet per second shall be kept at least 1,200 feet from aboveground magazines, outdoor ammunition storage facilities, production facilities, other aboveground ammunition facilities, and the installation boundary. This distance does not need to be observed if positive means are implemented to ensure that firing is directed away from these exposures.

b. Shotguns that use multiple shot, including bird or buckshot, shall be kept at least 600 feet from aboveground magazines, outdoor ammunition storage locations, windowless production facilities, and other aboveground ammunition facilities. Shotguns using multiple shot shall be kept at least 1,200 feet from production facilities with windows and from the installation boundary. This distance need not be observed if positive means are implemented to ensure that firing is directed away from these exposures.

2-1.6.4. Justification for Hunting on DON Activities. The use of firearms in an area where ammunition is stored, handled or processed creates an added risk. Hunting on a naval activity normally shall be authorized only when it is considered necessary:

a. To control the populations of predatory animals, wildfowl, poisonous snakes, or other animals or fowl that create unsafe or destructive conditions;

b. To reduce game populations to maintain the environmental control of wildlife;

c. To permit the use of game preserves and natural wildfowl flyways with appropriate limits on both hunting time and bag.

2-1.7. AIRCRAFT OPERATIONS IN THE VICINITY OF ORDNANCE FACILITIES. The following restrictions shall be observed during aircraft operations near ordnance facilities.

2-1.7.1. Overfly Restrictions. Aircraft, including helicopters, are not permitted to fly at an altitude of less than 500 feet over magazines or ammunition staging areas, ammunition handling piers while ammunition handing is in process or ammunition is staged, or explosives production areas. In some

cases the landing and takeoff patterns at air stations preclude compliance with this requirement, but aircraft should observe the approach-departure zones near explosives prohibited areas that are specified in figure 7-3. Every effort should be made to identify aircraft that violate these requirements and a report of each incident shall be forwarded to the activity commanding officer. This restriction does not apply to ready service magazines located on flight lines that directly support aircraft operations. See OPNAVINST 3770.2 (series) for FAA requirements.

2-1.7.2. Aircraft Operations at Piers. Aircraft operations to and from air-capable ships, while they are alongside or within one mile of ammunition terminal piers, are permitted only if authorized beforehand by the activity commanding officer and, except in emergencies, only if the overfly restrictions described in the preceding paragraph can be met. The use of helicopters to provide vertical replenishment of ammunition and explosives to ships berthed at any pier is prohibited.

2-1.8. PRIVATELY OWNED VEHICLES. Parking privately owned vehicles within a DON activity where ammunition and explosives are present shall be controlled to minimize fire and explosive hazards, and to prevent congestion in the event of an emergency. Refer to paragraph 7-13.13 for specific restrictions on parking areas and paragraph 12-7.7.3 for restrictions on parking commercial vehicles.

2-1.9. PHOTOGRAPHY IN HAZARDOUS AREAS. Any photographing on DON activities is subject to current safety and security restrictions. Photographic aids such as electronic flash attachments and floodlights may be used when authorized by the activity commanding officer if safety precautions are taken against possible ignition of dust, gases or vapors.

2-1.10. RADIO/RADAR TRANSMISSIONS. The following requirements shall be observed with respect to radio and/or radar transmissions. Radio Frequency (RF) transmissions are associated with numerous types of electronic devices such as: two-way radios (vehicular mounted and handheld), cellular phones, transponders, barcode readers and computers with wireless links, citizen band and ham radios, and some types of pagers.

2-1.10.1. Electroexplosive Devices. Electroexplosive devices (EED) such as squibs, blasting caps, igniters, and similar electrically-initiated, sensitive explosive devices are particularly susceptible to initiation when they are exposed to RF fields. Therefore these devices shall be packaged and kept in completely enclosed metal containers until just prior to their immediate use. When unprotected EEDs are handled, RF transmissions shall comply with emission control (EMCON) procedures as described in NAVSEA OP 3565 Volume 2. Additional safety requirements concerning EEDs are given in paragraph 5-3.4.3 and in NAVORD OD 10773.

2-1.10.2. RF Hazards to Personnel, Fuel, and Other Flammable Material. Personnel as well as fuel and other flammable liquids shall be protected from ground and aircraft radio and radar RF fields as required by NAVSEA OP 3565/NAVAIR 16-1-529 Volume 1.

2-1.10.3. Posting of RF Hazardous Areas. All radio and radar transmitting sites or sources shall be clearly marked with warning signs to protect personnel and ordnance from overexposure. Refer to NAVSEA OP 3565/NAVAIR 16-1-529 Volume 1 for posting requirements and illustrations of warning signs. All ordnance assembly, disassembly, handling and storage areas shall be clearly marked with warning signs to protect ordnance from overexposure. Warning labels shall be affixed to portable and mobile radios used on shore facilities and onboard ships. Refer to NAVSEA OP 3565 Volume 2 for additional information and warning sign illustrations. Specific guidance for shore facility and ship commands may be obtained by referring to their individual HERO survey reports.

2-1.11. FIREWORKS DISPLAYS. Fireworks displays shall comply with the following provisions.

2-1.11.1. Authorization. Ceremonial fireworks displays at DON activities may be authorized by the activity commanding officer if they are prepared, handled and operated by a licensed commercial vendor, through a properly executed contract, and if there is no Navy or Marine Corps involvement such as handling or storing the fireworks. The contract shall require compliance with National Fire Protection Association (NFPA) Pamphlet 1123 and the contractor shall carry adequate insurance. No further authorization is required. In remote areas, when the services of a commercial vendor cannot be obtained for a fireworks display, a request for a one-time authorization to deviate from the above requirements may be requested from NOSSA via the chain of command. These requests shall be submitted and authorization shall be granted, prior to contracting for any purchase or shipment of fireworks for the display. The following information is required when requesting an authorization:

a. Justification for using fireworks for a ceremonial display.

b. Certification that no commercial contractor is available to provide the display.

c. Description of the amount and types of fireworks to be used.

d. Detailed description of how and where the fireworks are to be stored and/or shipped, including storing and shipping dates.

e. Outline of methods and personnel to be used to perform the display.

f. List of specific safety precautions to be taken to ensure the safety of military property and equipment and of all personnel operating and viewing the display.

g. Information on coordination with local officials when appropriate.

NOTE

The proposed display must be fully supportable with respect to these requirements. Cost savings, convenience, and prior use are not valid considerations.

2-1.11.2. Coordination with Local Officials. In politically sensitive areas where a ceremonial fireworks display may be misinterpreted by the local populace or government, coordination between the local commanding officer and local officials is required prior to the display.

2-1.11.3. Unauthorized Use. Commercial fireworks that are confiscated or found at a DON activity shall not be used and shall be placed in isolated storage and turned over to qualified EOD personnel for treatment within 90 days.

2-1.12. EXPLOSIVES DEMONSTRATIONS. Demonstrations conducted on ranges, including the use of pyrotechnics or explosives at air shows, require minimum nonessential personnel separation distances based on criteria established in paragraph 13-1.8.1. These withdrawal distances may be reduced by the presence of protective structures for personnel or when measures are taken to suppress blast and/or fragment effects. Due to ballistic uncertainties for impact locations of various weapons and delivery systems, where demonstrations involve live fire exercises, range safety considerations will be determined on a case-by-case basis by NOSSA. Authorizations for such demonstrations will be requested as a site approval in accordance with paragraph 8-1.2. Minimum

separation distances for personnel essential to conducting the demonstrations will be included on the site approval request. When a range is used for various forms of demonstrations, the site approval should reflect the intended uses to preclude the need for multiple submissions.

2-1.13. TERMINATION OF USE OF POTENTIAL EXPLOSION SITES. Each PES no longer used to store, process or handle ammunition and explosives must undergo a closure process, to ensure that ammunition and explosives, and visible explosive residue, are removed within 180 days following termination of the facilities' use. The closure process for PESs which have contained only sealed/packaged ammunition items and are to remain under DoW control must be in accordance with paragraph 2-1.13.2. PESs which have been used for explosives processing, storage of bulk explosives, or in which explosives contamination is known or suspected, and will remain under DoW control, are subject to the requirements of paragraph 2-1.13.2 and chapter 14. PESs that are to be transferred from DoW control must have a close-out Explosives Safety Inspection (ESI), in accordance with paragraph 2-1.13.1, and meet chapter 14 requirements.

2-1.13.1. Responsibilities. Inspections of all PESs related to termination of operations are the responsibility of the host command having custodial cognizance over the affected ordnance facility. When PES termination is part of a BRAC action, or excessing action, the host command must request a close-out ESI in accordance with NOSSA M-8020.1 (series). The close-out ESI will evaluate the command's level of compliance with the closure process requirements cited in 2-1.13.2. The ESI will not be requested until all ammunition and explosives material, with the exception of limited amounts of security ammunition, have been removed from all PESs and the host command has conducted an initial inspection in accordance with paragraph 2-1.13.2. This ESI neither negates the activities' responsibilities to meet the decontamination and remediation requirements defined in paragraph 2-1.14 or chapter 14, nor qualifies as an inspection verifying that decontamination or remediation was performed. The termination of individual facilities not involved in a BRAC, or excessing action, will not need a close-out ESI.

2-1.13.2. Inspection Requirements. The following requirements have been established to help ensure that no threat to human health or the environment remains when ammunition and explosives operations are terminated.

NOTE

PESs that, at any time, have been used to store waste military munitions (WMM) must also comply with the closure procedures described in paragraph 11-7.3.7, for storage facilities storing Conditionally-Exempt waste military munitions, and paragraph 11-7.4, for storage facilities using Resource Conservation and Recovery Act (RCRA) storage permits.

Host activities shall include the following procedures in their termination process:

a. Empty and clear the PES and associated conveyances of all ammunition and explosives.

b. Clean the PES, as required, to remove any visible explosives residue.

c. Visually inspect the PES for the presence of remaining ammunition or explosives, or visible explosives residue, by an individual that is knowledgeable of the explosive processes performed in the PES and who is authorized to perform these duties.

d. Remove all fire and chemical hazard symbols and marking the PES as empty, with the exception of operating facilities or detonation sites that may pose sufficient explosives contamination to render visual inspections ineffective in verifying that a fire or explosive hazard is no longer present.

e. Secure the PES to prevent inadvertent use or access.

f. Notify the appropriate emergency response and regulatory authorities of the change in the PESs use.

g. Identify any PES that retains an ammunition and explosives or chemical agent contamination hazard, following emptying, cleaning, and a visual inspection.

h. Record the date the PES was inspected, the name and position of the host command's inspector, and the results of the inspection in permanent real estate records and in other documentation retained by the activity. The inspection results will include a statement certifying that the PES is visibly free of all ammunition, explosives, and/or explosives residue. Documentation of PES inspections shall be centrally located and readily available to any Naval or DoW inspection team.

i. Obtain site approval, in accordance with paragraph 8-1.2.1.c(3).

2-1.14. DECONTAMINATION. The joint procedures, established by Joint Conventional Ammunition Policies and Procedures (JCAPP) chapter 11 and DoDINST 5160.68 (series), to eliminate explosive hazards and dispose of contaminated facilities, land, tools, material, equipment, and ordnance, applies to all DON activities and contractors having knowledge or possession of items contaminated with ammunition, explosives, or chemical ammunition, and is implemented as described below.

2-1.14.1. Policies and Procedures. In addition to the applicable requirements of paragraph 13-15 and chapter 14, the decontamination and disposal of contaminated facilities, land, tools, material, equipment, and ordnance shall be performed in accordance with JCAPP J11.3.7. This paragraph addresses decontamination planning, management, and execution as well as item/ area control, signage, and record keeping.

2-1.14.2. Written Procedures. Written procedures required by JCAPP J11.3.7 to effectively and safely identify, control, and dispose of explosive contaminated items, material, equipment, and property shall be contained in standard operating procedures prepared in accordance with paragraph 2-1.1.

2-1.14.3. Tagging and Marking Contaminated Items. As outlined in JCAPP J11.3.7, when items have been contaminated with ammunition and explosives, their explosive safety status will be clearly displayed on the materials or equipment whenever practical, to positively communicate the type and level of hazard. When these items are transferred between activities or from one area of the activity to another, stored, or placed in standby status, they shall be tagged and marked in the following manner:

a. Tagging. A decontamination tag, DD Form 2271, DD Form 1348-1A, or equivalent locally authorized form, indicating methods, type, and degree of contamination, and restrictions on handling must be attached to each item or container as appropriate. Qualified and certified personnel are responsible for inspecting items on site and preparing the tags. When an item’s explosives safety status changes, the old tag shall be replaced with a new tag to show the latest explosives safety status of the item and all documents shall be changed to reflect the item's revised status. When tagged equipment is placed into service, tags shall be removed.

b. Marking. In addition to tagging, plant equipment being transferred or placed in standby status shall be conspicuously marked to indicate its explosives safety status. When an item's explosives safety status changes, markings shall be changed to show the status of the item, and all documents shall be changed to correspond. When the item is placed into service, markings shall be obliterated.

2-1.14.4. Identification and Control of Areas Known or Suspected to Contain Military Munitions. DON activities and installations shall

a. Identify all areas known or suspected to contain military munitions as indicated below.

NOTE

Geographic Information Systems (GIS) should be used.

(1) Areas on active installations shall be documented in installation master plans.

NOTE

In some cases, these areas are required to be also identified in other documents.

(2) Sites in the DON's Military Munitions Response Program shall be included on the DoW's Military Munitions Responsive Site Inventory. A list of these munitions response sites can be obtained from the regional Naval Facilities Command. If necessary, contact NOSSA and/or MARCORSYSCOM for assistance in determining the appropriate POC.

b. Maintain permanent records that clearly identify all areas known or suspected to present explosive or chemical agent hazards and ensure that such records are available to current and future users of the property. Such areas include, but are not limited to: operational ranges, former ranges, current or former munitions manufacturing facilities, current or former sites used for munitions demilitarization activities, and locations previously used for the burial of munitions. These permanent records shall:

(1) Identify any military munitions known or suspected to be present. The records shall identify the military munitions by nomenclature, hazard, quantity, exact location, and dud rate to the extent possible.

(2) Summarize any clearance, removal or remediation efforts, or explosives or munitions emergency responses previously conducted within the area.

(3) Be transferred for permanent retention to the cognizant Naval Facilities Command if the activity or installation is deactivated.

c. Prohibit unnecessary access and take appropriate action to deter unauthorized access to areas under DoN control that are known or suspected of containing military munitions. Such actions may include establishing access controls (such as fencing the area, establishing roving security patrols), which may be risk based, or providing public notifications of any potential hazards (such as posting UXO-hazard warning signs, conducting UXO-safety education programs). When used, signs must be kept legible and, when appropriate, in the predominant languages of the region, or as pictograms. When the DoN does not control the area, the responsible Naval Facilities Command or BRAC Office shall, at a minimum, provide written notification to the property owner and, if known, any tenants of the

potential explosive hazards. A record of this notification must be maintained as a permanent record. Assume the following areas present explosive hazards associated with military munitions:

(1) Impact areas on operational ranges unless the ranges are known to have been exclusively used for small arms ammunition training.

(2) Former ranges known or suspected to contain munitions or explosives of concern (MEC).

(3) Outdoor demolition areas, such as open burning (OB) or open detonation (OD) areas.

(4) Military munitions production or demilitarization facilities, and areas that may have received process wastewater contaminated with explosives residues.

d. When access is allowed to such areas, a risk assessment to evaluate the potential hazards associated with the proposed activity shall be completed and methods to mitigate any potential exposures shall be implemented before access is allowed.

2-1.14.5. Additional Requirements. Additional requirements regarding DON munitions responses conducted on real property, including buildings and installed equipment, are located in chapter 14.

2-1.14.6. Criteria. Criteria for the management and processing of material potentially presenting an explosive hazard (MPPEH) is located in paragraph 13-15.

2-1.15. SURFACE DANGER ZONES. No potential explosion site (PES) shall be sited within the surface danger zones of small arms ranges, skeet ranges, or artillery ranges. The encumbrance of ESQD arcs from a PES is permissible.

2-2. SECURITY REGULATIONS.

The policy and standards necessary to ensure the security of arms, ammunition, and explosives ashore are contained in OPNAVINST 5530.13 (series) and OPNAVINST 5530.14 (series). Specific requirements for ammunition and explosives facilities are covered in the following paragraphs.

2-2.1. AUTHORITY ENTRY. No unauthorized person shall be permitted to enter or remain in a magazine or explosives area. Employees shall be allowed in magazines or explosives buildings when they are required to do so and shall enter and leave explosives areas at designated points.

2-2.2. RESTRICTED AREAS. Areas where ammunition and explosives are handled or stored must be designated and posted as restricted areas. OPNAVINST 5530.13 (series) and OPNAVINST 5530.14 (series) provide specific requirements for posting, fencing, protective lighting, lock requirements and intrusion detection systems.

2-2.2.1. Posting Requirements. Signs designating restricted areas should not be attached to magazines or explosive operating buildings.

2-2.2.2. Fencing Requirements. Fencing, excluding fences installed only for security reasons at a minimum of 30 feet (outer clear zone) or 20 feet (inner clear zone), should not be placed closer than intermagazine distance (based on magazine explosive limit) to a magazine, nor closer than intraline distance to operating buildings. Fences shall be grounded in accordance with lightning protection requirements contained in paragraph 6-6.3.2.

2-2.2.3. Unfenced Facilities. The requirements of OPNAVINST 5530.13 (series), Appendix F shall be followed.

2-2.2.4. Emergency Event. For any given area, an individual who is thoroughly familiar with operations being conducted in that area shall be available at all times. The person shall be required to proceed immediately to the area when an emergency arises to determine whether the firefighting and guard forces present understand the hazards involved. He/she shall advise these forces of existing hazards as necessary for the protection of personnel and property.

2-2.3. PORT EMERGENCY SIGNALS. The use of emergency alarms and signals shall comply with the requirements of the following paragraphs.

2-2.3.1. Emergency Alarms. In the event of an emergency and upon the appropriate signal from authorized personnel, all operations that involve ammunition or explosives shall be terminated. Ships alongside an ammunition or explosives pier shall be prepared to get under way immediately upon sounding of the emergency alarm.

2-2.3.2. Emergency Drills. No emergency drill that requires the use of the general alarm, ship's bells, whistle, or siren shall be held onboard ship during ammunition or explosives handling operations while ships are alongside ammunition or explosives piers. This action might lead to misunderstanding. Similarly, when the activity holds fire or disaster drills at piers, these drills shall be announced well in advance to the personnel aboard ships at piers.

2-2.4. DUTIES OF GUARDS. Guards assigned to protect stores of ammunition and explosives shall be thoroughly familiar with their duties and understand the general hazards associated with the ammunition and explosives in their patrol areas. Except in special cases, they should not be armed with rifles or weapons using tracers or explosive projectiles and shall be instructed about the danger of shooting in the direction of a PES. In addition to their security responsibilities, guards shall immediately report to the responsible personnel any of the following:

a. All fires within or adjacent to the activity.

b. Conditions that are or may become fire hazards such as long grass, undergrowth, and other vegetation in the vicinity of magazines as described in paragraph 4-1.10.

c. Dangerous practices such as smoking, unauthorized use of fire equipment, and tampering with ammunition or electrical equipment by employees working in magazines or explosives areas.

2-2.5. MILITARY WORKING DOGS EXPLOSIVE SEARCH TRAINING. OPNAVINST 5585.2 (series) and MCO 5585.5 (series) establishes a program for training military working dogs (MWD) to search for and detect hidden explosives. MWD training should be conducted in areas regularly inhabited by people; however, it is essential that simulated searches be enacted in such a manner that unrelated personnel are not exposed to the hazards of an accidental explosion of the training sample.

2-2.5.1. Training Aids. Only qualified personnel, designated by the command, meeting the requirements of paragraph 2-3.2 and following the command SOP shall perform the duties related to custodianship, transportation, security, and aid placement. Training aid storage shall be in facilities that meet the QD requirements of chapter 7. The training aid package being transported to a training location shall be assigned the DoW HC/D storage compatibility group of the highest explosive component within the package.

2-2.5.2. Explosive Detection Qualification Safety Procedures. In addition to the safety precautions specified in chapter 5 of OPNAVINST 5585.2 (series), the following safety precautions shall be taken in the planning and execution of explosive detection qualification activities.

a. All unrelated persons must be evacuated from the training area to a distance not less than 100 feet from the explosives.

b. The staging, transportation and emplacement of aids during any one training exercise will not exceed 9 pounds net explosive weight (NEW). When used in buildings for training, individual samples will be placed at sufficient distance to prevent propagation from one another.

c. Multiple training areas must be separated by a minimum of ¼ miles.

d. An exception to the above training area limits is provided for activities on a location under range control with established regulations that specify different restrictions (higher or lower).

e. Non-explosive oxidizer training aids are not included in the total quantity limitations.

f. The handling and repackaging of explosive training aid components must be minimized through efficient and effective detection qualification event planning.

2-3. PERSONNEL REGULATIONS.

All personnel shall be qualified and certified to perform their assigned duties safely. The following regulations apply to all military (active duty and reservists) and civilian employees and contractors/sub-contractors engaged in operations that involve ammunition and explosives, chemical ammunition or related hazardous materials at DON activities. This includes personnel licensed and qualified, as described in SW020-AF-HBK-010 and for the Marine Corps, MCO 11240.118, to operate material/weight handling equipment, locomotives or motor vehicles.

2-3.1. MEDICAL FITNESS. Successfully passing a periodic medical examination is a required qualification of all personnel, both military and civilian, who perform those duties described in paragraph 2-3 involving ammunition and explosives. Examinations are conducted to ensure personnel are physically and mentally qualified to work with these materials. In order to be qualified as explosives motor vehicle operators, government civilian and military personnel must meet the physical examination requirements specified in NAVMED P-117, Article 15-107. It is important to note there are now two types of examinations: Program 720 will be used for off-base explosive drivers, and Program 721 will be used for on-base only explosive drivers/ MHE operators holding a valid OF-346 stamped "on-base only" driver's license. Civilian contract personnel need only be qualified in accordance with 49 CFR 391 standards for both on-base only and off base explosive driver and present the applicable DOT medical certificate to the command program coordinator. Additionally, civilians must meet the general standards for employment provided by the Office of Personnel Management (OPM). All personnel exposed to highly toxic materials shall be given physical examinations at least annually and more often as required by the Navy Occupational Safety and Health Program or local activity medical departments.

2-3.1.1. Explosives Motor Vehicle Operators. Civilian and military explosives motor vehicle operators are required to meet the physical qualifications noted in the Manual of the Medical Department, NAVMED P-117, Article 15-107.

a. Civilians. Government civilian personnel who operate explosives motor vehicles offbase will complete a medial examination based on program 720 with a periodicity of up to two years, unless modified by NAVMED P-117, Article 15-107, and only issued a DOT MCSA-5876 (Medical Examination Report Form) per 49 CFR 391.

b. Military. Military personnel, both active duty and reservists, who operate explosives motor vehicles off-base will complete a medical examination based on Program 720 with a periodicity of up to two years, unless modified by NAVMED P-117, Article 15-107, and issued the OPNAV Form 8020/6 annotated with the letter B on the form.

c. Contractor. Drivers in a government-funded direct support role, will follow a two year examination periodicity for both on-base and off-base per 49 CFR 391.

2-3.1.2. Explosives Handler. Civilian and Military explosives handler examinations (Program 721) are intended to provide assurance that those who handle explosives or are designated on base only explosives drivers, including those who handle ammunition and explosives with industrial materials handling equipment, are physically qualified. Examinations will be conducted in accordance with the Manual of the Medical Department, NAVMED P-117, Article 15-107. The examination interval for both civilian and military explosives handler is every five years unless modified by NAVMED P-117, Article 15-107. The examination is documented via the OPNAV Form 8020/6 (Medical Examination Certificate) annotated with the letter D on the form.

2-3.1.3. Exceptions, Exemptions, and Waivers. Refer to the Manual of the Medical Department, NAVMED P-117, Article 15-107 for specific criteria.

2-3.2. QUALIFICATION AND CERTIFICATION PROGRAM. All DON personnel that handle or physically interact with ammunition and explosives shall be qualified in accordance with OPNAVINST 8023.24 (series) or MCO 8023.3 (series).

2-3.3. SAFETY TRAINING. Explosives safety training and education of personnel shall comply with the requirements of appendix C, locally-generated training plans approved by the commanding officer that support the requirements of OPNAVINST 8023.24 (series) or MCO 8023.3 (series), and hazard control issues in the activity's SOPs covering ammunition and explosives operations.

2-3.3.1. Employees shall be trained under the direct supervision of supervisors or experienced workers until they are competent to safely perform the work assigned to them and have been qualified and certified in accordance with applicable OPNAV, Marine Corps and local directives. Supervisors shall inform their employees of the safety precautions applicable to the operations and shall require them to observe these precautions. All training shall be documented in the individual's training records.

2-3.3.2. All employees shall be informed where important regulations and essential rules that concern the station can be viewed. All workers shall be supplied with and required to sign off on those SOP's applicable to the operation(s) and equipment for which they will be responsible.

2-3.3.3. Guards, electricians, carpenters, and other personnel who are not regularly employed in handling explosives and ammunition, but who may occasionally come in contact with these materials shall be thoroughly briefed regarding hazards to which they are exposed. The possible causes of fires and explosions shall be carefully explained to them.

2-3.3.4. The location and use of first-aid kits, firefighting apparatus, and exits from buildings and areas shall be carefully explained to all personnel.

2-3.4. WORKING PARTIES. Manpower shortages at shore stations may occasionally create a need for a working party to assist in the handling of ammunition and explosives. A working party is defined as, personnel (on station, off station or ships forces) who are not in the activity's ammunition and explosives handlers qualification and certification (QUAL/CERT) program, as defined in OPNAVINST 8023.24 or MCO 8023.3 (series). The use of a working party to handle ammunition and explosives is strongly discouraged and shall be used only for temporary relief of manpower shortfalls in order to meet operational requirements. When such conditions exist, the commanding officer for the activity with this requirement has final responsibility for safety and will ensure that all working party personnel shall:

a. Read and sign the Workers Statement for all applicable Standard Operating Procedures (SOP) that they will be working with. These SOPs shall conform to the requirements of NOSSAINST 8023.11 (series).

b. Be given a hazards control briefing and a detailed walk-through of the operation.

c. Be instructed to respond immediately, and without question, to the directions and orders given to them by their assigned supervisors or safety observers regardless of rank/grade.

d. Be instructed to cease operations immediately and notify the assigned supervisor or safety observer in the event any situation arises that was not briefed, is not understood, or appears unsafe.

e. Have an appropriate number of team leaders and safety observers assigned, who are qualified and certified in accordance with OPNAVINST 8023.24 (series) or MCO 8023.3 (series), so that all working party members are provided constant oversight.

f. Have a senior supervisor designated.

2-3.5. WORK SHIFT CHANGING. When working shifts, work shall be stopped at the end of the shift and the general situation and special orders shall be reported by supervisors and other responsible persons to their relief. Any task in progress at the end of the shift, that would be impractical or hazardous to suspend, shall be safely completed by the outgoing shift. For example, the outgoing shift shall complete a hoist already begun and bring the load of ammunition or explosives to rest in a safe place. Those in charge of the in-coming shift shall inspect all tools, equipment, and gear, and correct any faulty conditions before beginning work. The outgoing shift shall clear the work area promptly. When all is clear and ready, the person in charge of the new shift shall order work to begin. The change shall be careful, thorough, and deliberate, and thoroughly covered in applicable SOPs.

2-4. PERSONAL PROTECTIVE EQUIPMENT.

Personal protective equipment (PPE) consists of garments and devices necessary to protect individuals against hazards inherent to the performance of specific jobs. The following paragraphs relate to these items of special equipment required to protect personnel and to reduce any hazards involved in explosives operations.

2-4.1. GENERAL. Because certain ammunition, explosives, and other hazardous materials, particularly chemical ammunition and liquid propellants, present health hazards, operations that involve these items require the availability and use of specific PPE. PPE shall be provided and used where it is impractical to enclose or isolate the process or equipment, to make process material substitutions, to provide ventilation, or to use other control measures. In addition, where there are short exposures to hazardous airborne concentrations of contaminants, and where unavoidable or accidental spills may

occur, PPE shall be provided and used. PPE does nothing to reduce or eliminate a hazard, and its failure means immediate exposure to the hazard. The fact that it may become ineffective or misused without the knowledge of the wearer is particularly serious. OPNAVINST 5100.23 (series) is the governing document for PPE and should be referred to as required. The Navy and Marine Corps Public Health Center (NMCPHC) should be contacted for data on PPE required for unusual hazards or toxic exposures.

2-4.2. POLICY. PPE is not to be confused with safe work attire, such as short sleeves, cuffless trousers, pocketless shirts, substantial shoes or clothes that fit properly. Provision of every day attire that is worn by prudent individuals to avoid unnecessary risk is the responsibility of the employee and shall be considered a condition of employment. Pre-employment and preplacement physical examinations should include determination of the individual's ability to wear protective equipment that is required for the job. Complaints from employees regarding the wearing of personal protective equipment should be promptly and thoroughly investigated. Garments or devices should be properly adjusted to the individual and repairs made without delays.

2-4.3. DETERMINING REQUIREMENTS. Requirements for specific kinds of PPE should be established on the basis of a comprehensive hazard assessment of the working conditions for each operation. In addition, careful analysis should be made of accident records (including correlation of parts of body injured with activities producing injuries), safety inspections, employee habits and unsafe acts, and personnel suggestions. When hazards cannot be abated or controlled, appropriate PPE shall be made available and worn by all personnel involved. SOPs must include requirements for PPE. Items of PPE must be approved by the safety director before being procured.

2-4.4. TRAINING. Definite rules governing the use of PPE shall be formulated and published. On-the-job training must include requirements for the use of PPE. Supervisors shall ensure that the care and use of personal protective clothing and equipment is performed in accordance with OPNAVINST 5100.23 (series). Special emphasis should accompany the introduction of new items in order to increase the level of acceptance and use. Supervisors shall be especially careful to wear PPE where it is required in order to set an example and to gain experience in solving problems created by the use of these devices. Adequate attention to cleaning and disinfecting is especially important for equipment worn about the face.

2-4.5. MAINTENANCE. PPE must be properly maintained since the life of the wearer maybe dependent on its proper functioning. Provisions shall be made for laundering and disinfecting protective garments and devices so that decontamination and sanitary standards are met. An appropriate inspection schedule should be established with the frequency of inspection dependent on the various types of equipment involved. In establishing an inspection schedule, recommendations of national standards, size of operations, and the amount of use should be given consideration. The proper maintenance of PPE is an inherent responsibility of supervision, and where necessary to assure a high standard of maintenance, personal weekly inspection of the equipment should be conducted by supervisory personnel. It is the responsibility of the safety director to assure that the program is being conducted in a satisfactory manner.

2-4.6. PROTECTIVE CLOTHING. Where employees are required to wear special clothing (powder uniforms, anti-contamination clothing, impervious clothing, etc.) and this necessitates changing from street clothes, a designated location for changing clothes will be established and suitable clothing lockers provided. Protective clothing that is worn at work shall not be worn or taken away from the premises, except for approved laundry service since this may introduce unnecessary risk to personnel

not directly associated with hazardous operations. Special clothing should not be altered except under the direction of supervisors.

2-4.6.1. Special Protective Clothing. Powder uniforms must be fastened with nonmetallic fasteners and be easily removable. Pockets should be of the lattice type. Trouser legs, slacks, and sleeves should be tapered and the trouser legs and slacks shall be without cuffs, and should extend over the top of shoes or boots. The garment should fit snugly around the waist and neck but caution must be exercised to avoid a fit around the waistband, belt, or neck sufficiently tight to cause skin irritation or dermatitis. These garments, as well as head coverings, should be made from tightly woven, smooth fabric and shall be flame-resistant or made of material which has flame-retardant qualities which meet the requirements of MIL-C-43122. Coveralls, Explosive Handlers (MIL-DTL-14610) are a garment which meets the above requirements. It is treated with a durable flame-retardant and does not require retreating. Each installation shall establish the laundering conditions that will effectively remove contamination from explosive plant clothing. Regular testing will verify the effectiveness of the laundering operations.

2-4.6.2. Preventing Static Electricity. Silk, wool, rayon, nylon, or other synthetic-fiber outer or undergarments shall not be worn during any operation if the generation of static electricity would create a hazard. Where static electricity is a concern, outer and under garments should have a high cotton fiber content.

2-4.6.3. Flame-Retardant Textiles. While it is not possible to make combustible textiles completely resistant to charring and decomposition when exposed to flame or high temperature, a degree of flame-resistance can be achieved. Clothing made of flame-retardant treated fabrics shall be used by personnel working in buildings or operations where there is exposure to open flames, the possibility of flash fires, or the possibility exists of contaminating clothing with materials that could flash. All operations shall be carefully analyzed to determine the need for flame-resistant clothing for those personnel involved. To enable ready assurance during inspections that employees are properly clothed, flame-resistant clothing should be identified in a manner that is distinctive from similar clothing that is not flame-resistant.

2-4.6.4. Selection Criteria. An increasing range of flame-resistant treatments for natural fiber materials is available, and the selection of a particular treatment is governed by the intended use of the treated fabric. Where durability to laundering or weathering is claimed, the fabric should be tested for flame-resistance after being subject to the applicable cleaning or exposure procedures. All flame-resistant textiles shall be capable of complying with the performance requirements of either the small or large scale tests (depending on the purpose the materials to be tested are to serve) established in NFPA Standard No. 701 or MIL-C-43122, whichever is more restrictive. Many factors mitigate against the practice of specifying a single type of flame-resistant textile or uniform for all workers and all exposures. For example, some synthetic fabrics used commonly in industry to provide protection from flash fires have been found to shrink and decompose to a tar-like substance that burns into skin when exposed to the intense heat of certain pyrotechnic compositions. Generally, flame-retardant or flame-retardant treated fabrics which have high moisture regain, and that carbonize with minimal shrinkage when exposed to fire should be used. Such fabrics are mandatory for metal fuel pyrotechnic mixtures and handling finely divided metallic powders. Flame-retardant treated cotton meets this requirement, and with its high moisture regains assists in reducing the potential for static electrical charge, generation, and retention.

2-4.6.5. Leather Clothing. Approved leather clothing should be worn by personnel who will be exposed to heat or splashes of hot metal. Leather clothing is manufactured in the form of coats,

overcoats, sleeves, aprons, and leggings. The clothing should be well constructed and provided with fastenings, and should fit loosely enough to allow free movement.

2-4.6.6. Rubberized or Plastic Clothing. Personnel handling acids or caustics shall be provided with one or more of the following, depending on the degree of hazard:

a. Chemical-resistant rubber gloves with their tops tucked inside coat or jacket sleeves;

b. Rubber or plastic aprons;

c. Rubberized trousers;

d. Rubber boots;

e. Rubber or synthetic jackets.

In addition, they shall be provided with proper eye protection (e.g., chemical goggles, face shields or a combination of these) and/or head protection.

2-4.6.7. Energetic Liquid-Handling Clothing. Personnel handling and working with energetic liquids shall wear the protective clothing and use the protective equipment that is specifically required by technical manuals for use with these propellants.

a. For Otto Fuel II use NAVSEA S6340-AA-MMA-010.

b. For other than Otto Fuel II, NAVORD OP 3199 describes the hazards and toxic experience that involves liquid propellants.

2-4.7. PERSONAL PROTECTIVE EQUIPMENT. The requirements for PPE are defined in OPNAVINST 5100.23 (series). Specific requirements related to ammunition and explosives operations are covered in the following paragraphs.

2-4.7.1. Respiratory Protection. Respiratory protection programs must met the requirements specified in OPNAVINST 5100.23 (series). A trained Respiratory Protection Program Manager (RPPM) shall be appointed in writing by the installation commander. The RPPM shall be responsible for implementing program requirements. For those gases and materials that are not only inhalation hazards but also present skin contact and absorption hazards, appropriate protective clothing shall be worn along with the proper respiratory protection equipment.

2-4.7.2. Head Protection. Safety helmets that comply with ANSI Z89.1 shall be worn by personnel working in places such as storehouses or magazines, where they could be struck by heavy failing objects; areas where material is stacked above the workers head height; by material handling equipment operators moving ammunition and explosives; ship loading or offloading operations; or pouring rooms as protection from splashes of hot liquids.

2-4.7.3. Eye and Face Protection. Suitable eye protection must be provided in accordance with a sight conservation program that meets the requirements specified in chapter 19 and 20 of OPNAVINST 5100.23 (series). Specific requirements related to ammunition and explosives operations include the following.

a. Eyeglasses conforming to Food and Drug Administration (FDA) requirements will not be considered as substitutes for industrial safety glasses.

b. Photochromic lenses will be permitted based on a complete justification provided by the employees visual specialist, including the specific ophthalmic problem and the prescription.

c. Contact lenses cannot be considered as substitutes for appropriate eye protection. In some cases contact lenses may increase the hazard. When contact lenses are prescribed as necessary by a visual specialist, additional eye protection, such as tight-fitting goggles, shall be required.

d. When operations that require safety eyeglasses are conducted nearby each other, the safety glasses shall be equipped with side shields.

e. The frames of safety eyewear shall NOT be made of highly flammable plastics.

f. Emergency eyewash facilities will be provided where chemicals and propellants/ explosives are handled and stored. The eyewash facilities will comply with the requirements of paragraph 8-4.2.4, chapter 19 of OPNAVINST 5100.23 (series) and ANSI 358.

g. Eye protection during laser operations shall meet the requirements in chapter 22 of OPNAVINST 5100.23 (series).

h. Personnel exposed to flying sparks, shavings, light fragments, chemical splash hazards, molten explosives, or tar shall wear goggles or spectacles with side shields. For severe exposures, wear a face-shield over goggles or spectacles with side shields. Severity of exposure will be established in accordance with chapter 19 of OPNAVINST 5100.23 (series).

2-4.7.4. Hearing Protection. The requirements for the Hearing Conservation and Noise Abatement Program specified in chapter 18 of OPNAVINST 5100.23 (series) shall be met.

2-4.7.5. Foot and Leg Protection. All employees (military and civilians) occupationally exposed to foot and toe hazards will be furnished appropriate safety shoes/boots to be worn at all times in designated foot hazard areas. Special purpose footwear for different working environments include the following:

2-4.7.5.1. Conductive Shoes. Personnel who work on a conductive surface in an area where ammunition, explosives or flammable vapors are present, shall wear conductive non-sparking shoes. See paragraphs 5-5.3.1. and 5-5.3.2. Transients or visitors who enter these areas shall wear non-sparking conductive shoes, conductive overshoes with ankle straps, or a safety department-approved static dissipater. Under no circumstance will personnel working on electrical equipment or facilities wear conductive-sole safety shoes or other conductive footwear. Conductive shoes with conductive composition soles shall meet the standards of American Society of Testing and Materials (ASTM) Standard F2413-05. The maximum electrical resistance permitted for each shoe, conductive rubber or other type of conductive footwear, is 500,000 ohms. Conductive footwear requires care to ensure retention of their conductive properties. When not in use, they should be stored in lockers close to the room where they are to be worn. Employees issued conductive footwear should not wear them between their place of work and home.

NOTE

Commands may specifically allow the use of conductive shoes for Research, Development, Test & Evaluation (RDT&E) operations involving electrical or electronic equipment when appropriate data is collected to substantiate the policy and specified in the SOP.

2-4.7.5.2. Spark-proof Safety Shoes. The friction and shock of shoes on explosive materials and sparks from metal parts in shoes are potential hazards with all explosive materials. Spark-proof (non-spark-producing) shoes are required in areas where there is no danger of ignition of exposed explosives as a result of a static spark discharged from worker. Shoes with soles and heels of leather, rubber, or synthetic composition (neolite, neoprene, and similar compositions) may be used provided the soles and heels contain non-exposed nails or holes. The shoes shall have a fully enclosed safety toe cap. Periodic inspections shall be made to detect and eliminate any shoes with exposed metal. The soles and heels of shoes must be cleaned free from sand and dirt before entering a building containing explosives. Conductive shoes meeting the requirements for explosives operations (non-spark producing shoes) may be substituted for them if desired.

2-4.7.5.3. Other Foot Protection. Overshoes, rubber boots, or rubber-soled shoes with safety toes and without exposed metal may be worn by visitors and transients instead of non-sparking shoes in all areas except where conductive shoes are required. When necessary for cold weather protection, rubber footwear may be worn in magazines where there are no exposed explosives, flammable fumes, or dust concentrations. They may also be worn in processing buildings where floors are habitually kept wet. They shall not be worn in black powder magazines nor in magazines that contain initiating explosives stored in “crocks”.

2-4.7.5.4. Leg stats. Legs stats are acceptable for visitors or transients only, provided their basic footwear is of non-sparking construction.

2-4.7.6. Hand and Arm Protection. Many jobs require that adequate devices be worn by personnel to guard their arms and hands against injuries. The following guidance is provided for the selection and use of gloves and arm protectors.

2-4.7.6.1. Protective Gloves. Appropriate gloves should be provided for personnel who come in contact with toxic materials, materials that can cause cuts, splinters, or burns including acid or caustic mixtures, and extreme heat. Nonconductive gloves shall NOT be worn in locations where operations are performed which involve:

a. Exposed electroexplosive devices; e.g., squibs, detonators

b. Electrically initiated items with exposed electric circuitry; e.g., rockets

c. Hazardous materials that could be ignited by static discharge from the human body.

Leather gloves may be worn while performing manual operations involving linked, unpacked ammunition with electric primers. Nonconductive gloves are permitted where surfaces, equipment floor, item and operator (through conductive shoes) is grounded.

2-4.7.6.2. Hand and Arm Protectors. Miscellaneous hand and arm protectors such as mittens, sleeves, padded arm protectors, hand pads and finger cots shall be made available as necessary.

2-4.8. MISCELLANEOUS PERSONAL PROTECTIVE EQUIPMENT. Miscellaneous PPE may be required as follows.

2-4.8.1. Sweatbands. Operators shall wear sweatbands on their foreheads when necessary to prevent perspiration from falling onto materials such as metal powders and other compositions that may react with, or be ignited by, perspiration. Where possible, such operations should be conducted in air-conditioned rooms.

2-4.8.2. Hair Protectors. Personnel engaged in operations that involve moving machinery, open flames (cutting torches) or exposed explosive dusts shall wear hair protectors or caps so their hair is fully covered at all times. Caps should have a stiff brim to protect the forehead, and if worn near sparks, caps should be fire retardant.

2-4.8.3. Lifelines and Belts. When personnel enter buildings or tanks where there may be fuel vapors, an excess of acid fumes, or vapors of other toxic gases, lifelines and belts shall be used in conjunction with other protective equipment as specified in OPNAVINST 5100.23 (series). Each lifeline shall be controlled by another person outside the tank or building.

2-4.8.4. Protective Creams. Protective and conditioning skin creams should be used, as directed by the medical officer at DON shore activities, to prevent dermatitis from certain types of exposures.

2-4.8.5. Fire Blanket. If safety showers are not provided, flameproof blankets shall be provided and located in easily accessible places within buildings that enclose pyrotechnic material processing.

2-4.9. PROHIBITED ARTICLES IN HAZARDOUS AREAS. Personnel working with explosives, in explosive areas, or in certain other designated areas under specified circumstances established by the local command shall not wear or have prohibited articles on their persons.

2-4.9.1. Personal Accessories. It is forbidden to wear personal accessories that include, but are not limited to, watches, rings, necklaces, chains, bracelets, earrings, neckties, scarves, personal Electronic Devices (PED), Personal Wearable Fitness Devices (PWFD) and Personal Wireless Medical Devices (PWMD) when:

a. Working in areas where exposed explosives are present.

b. Operating moving or rotating equipment (whether guarded or unguarded).

c. Physically handling material; i.e., lifting, moving, or working in areas where personal accessories could be caught on protruding objects; (i.e., splinters, nails, etc.).

d. Exposed to potential electrical shock.

e. Handling weapons with exposed electric leads.

f. Encroaching the established HERO separation distance for ordnance (radiating devices only) (see NAVSEA OP 3565 Volume 2 for details).

2-4.9.2. Exceptions. The following exceptions are permitted at the discretion of the activity's explosives safety officer (ESO):

a. Personal religious accessories, medical alert tags, and/or personal identification tags (Dog Tags) that are worn under work, safety, and protective clothing that pose no significant hazard to personnel.

b. Use of PED, PWFD and PWMD must be in compliance with OP 3565 Volume 2 and compatible with the environment in which the device(s) will be used (e.g., intrinsically safe, certified for hazardous (classified) locations). Relevant device documentation will be available for review prior to entry. In addition, the hazard control briefing will include acknowledgment verifying that users have read and understand that their device(s) are compliant with all requirements.

NOTE

The command or activity responsible for the hazardous (classified) location will ensure electronic devices allowed into such locations have the proper certification. Documentation will be available for review prior to entry, in addition to documenting acknowledgement in the Hazard Control brief verifying that users have read and understand that their device complies with the requirements.

2-4.9.3. Tools. Only those tools specified in the SOP are permitted in the work area. Commanding officers shall adopt security measures, including periodic inspections, to ensure that unauthorized tools are not introduced into the workplace.

2-4.9.4. Firearms. No person carrying a firearm shall be permitted in any explosives area or building except for couriers, assigned security personnel and/or guard forces, or personnel responding to an emergency, who have been directed by competent authority. See paragraph 2-1.6 for hunting authorization.

2-4.9.5. Matches and Lighters. Matches, cigarette lighters, electronic cigarettes, and other spark-producing devices are not permitted in areas where ammunition and explosives are present unless approved by the activity commanding officer. Flame-producing devices used in tests or operations are permissible in operational areas as identified in approved SOPs or permitted in writing by the local explosives safety office; see appendix F. Requirements regarding possession of these items and smoking regulations are given in paragraph 4-1.6.

2-4.9.6. Periodic Searches. As directed by the activity commanding officer, periodic searches of employees and personal property should be made for prohibited articles (as described in the preceding paragraphs) in hazardous areas. Guidelines shall be established for conducting searches and actions to be taken.

2-4.10. EATING. Personnel shall not eat, drink, bring food to, or store food, in any area where exposed explosives or toxic chemicals are handled or stored. All food will be stored and consumed in designated break/lunch room areas. Personnel may bring beverage coolers or dispensers in an area where ammunition is being handled or stored as long as the ammunition is in approved shipping containers. These restrictions do not apply to water coolers or dispensers installed by the activity.

2-5. SHIP BERTHING AND HANDLING.

The following regulations apply to all DON and DON-controlled ships carrying ammunition and explosives which are berthed at, or must handle ammunition and explosives at, DON shore stations

and support activities world-wide, as well as other ammunition and explosive laden ships that berth or handle at DON ports.

2-5.1. BERTHING. Specific berthing regulations that establish Explosives Safety Quantity-Distance (ESQD) arcs are addressed in paragraph 7-10. To ensure compliance with the combatant exemption addressed in paragraph 7-10.1, ships commanding officers must validate that all ammunition and loaded weapons systems are properly stowed per NAVSEA OP 4, paragraph 2-16, and that identified work requirements to be conducted while in port will not impact that status unless prior arrangements have been made with the supporting installation. The regulations and procedures described in the paragraphs below are established to maintain a safe environment and qualify various berthing scenarios respective to the criteria in chapter 7.

2-5.1.1. Commanding officers (CO) ashore will ensure the Senior Officer Present Afloat (SOPA) instructions for ports providing berthing for ships carrying ammunition contain a detailed plan for actions to be taken in an emergency involving or affecting the ship. The plan shall include specific details for coordination between the ship and the support activity concerning required services, tugs, supplemental firefighting equipment, changes in fire main status and changes in the ship's damage control or fighting status.

2-5.1.2. When practicable, ships scheduled for an availability should be completely off loaded of all ammunition, except for small arms security items and safety at sea pyrotechnics, and concussion grenades stored in accordance with paragraph 2-5.1.2.1. Availabilities at locations other than commercial or Naval Shipyards, or Ship Repair Facilities (SRF) such as Tenders and NAVSTA piers may be conducted with ammunition onboard with concurrence of the NAVSTA commanding officer; certification of operational necessity by the Immediate Superior in Command (ISIC); and approval by the Type Commander (TYCOM). Should ammunition be retained on board, the ships commanding officers must submit an ammunition requirement message to the NAVSTA/SHIPYARD/SRF CO/ESO which identifies ammunition to be retained prior to the start of the maintenance availability period per NAVSEA OP 4 paragraph 2-16. To the maximum extent practical, weapons systems or spaces should be emptied or reconfigured, or arrangements made with the shore activity prior to arrival to ensure that required work packages can be supported to reduce the need for an explosives safety deviation. All cargo ammunition and explosives must always be offloaded prior to drydocking or entry into a shipyard or SRF, except in emergency situations. Specific details on berthing and handling any ammunition within a shipyard are provided in paragraph 2-16 of NAVSEA OP 4.

2-5.1.2.1. Hazard Class/Division (HC/D) 1.1F concussion grenades may be stored in ship’s secure, operational magazines, or zero-arc magazines on ships in shipyards, including commercial shipyards, when necessary to meet security requirements without requesting site approval or an event waiver. If the ship is placed in drydock, the grenades must be offloaded or restricted to storage in zero-arc magazines. The following conditions are mandatory to the storage and handling of this security material.

a. The minimum amount of HC/D 1.1F material necessary to meet mission requirements will be stored onboard ships, with a 10 pound NEW limit.

b. Hot work cannot be performed adjacent to (on the same level and sharing a bulkhead), or directly above or below a zero-arc magazine containing HC/D 1.1F material. The following conditions apply to hot work near an operational shipboard magazine:

(1) Notify the Weapons/Ordnance Handling Officer (OHO) and the Officer of the Deck (OOD).

(2) If the hot work is adjacent to (that is, on the same level as, and sharing a bulkhead with, another explosives area), hot work may be performed on the bulkhead furthest removed from the bulkhead shared with the space containing ammunition. Hot work may only be performed on the overhead deck and bulkheads at locations no less than 5 feet from the shared structural or nonstructural bulkhead.

(3) In spaces directly below the explosives area, the hot work may only be performed on the deck and bulkheads at locations no less than 5 feet from the overhead. No hot work is permitted in spaces directly above an explosives area.

c. Only zero-arc ready service storage magazines with pumice-lined containers shall be used.

d. The zero-arc magazines must be placed in a location free from hot work or material handling that also ensures constant security surveillance. A space visible from the quarterdeck or other suitable location shall be approved by the ship's commanding officer. The 42-inch square footprint will load the deck to 185 pounds per square foot. Each selected location should be reviewed by the planning yard for adequate deck strength.

e. Movement of Zero-Arc Magazines. If the zero-arc magazine must be relocated on the ship, or moved off the ship, the HC/D 1.1F material must be moved in the pumice-filled containers and staged in the new location until the magazine is in position applying the following restrictions:

(1) Moves shall be conducted when the workforce present onboard can be limited to those essential to ordnance movement and ship safety and security. All personnel not essential to the ordnance move must be evacuated beyond the 100-foot fragmentation zone created by a pumice-filled container of grenades.

(2) A single point of contact familiar with the status and plans for shipyard and ship's forces repair efforts will coordinate HC/D 1.1F material movement and stowage.

(3) Personnel handling the HC/D 1.1F material must be qualified and certified.

(4) No hot work is planned or conducted during the movement.

(5) Offload movements are permitted once the shipyard and ship weapons departments establish a safe path from the magazine to the awaiting vehicle.

2-5.1.3. The berthing of loaded cargo ammunition ships (T-AOE, T-AKE and AS class) at locations that do not provide adequate ESQD arcs require an event waiver, except as defined in paragraph 7-10.d.

2-5.1.4. The berthing of Navy ships, with exception of hospital ships, will not be restricted by ESQD arcs. However, no home porting of ships other than cargo ammunition ships will be authorized at ammunition terminal piers used primarily for ordnance handling.

2-5.1.5. Cargo ammunition ships berthed under a waiver of ESQD requirements must comply with the following additional requirements:

a. The ship shall be berthed in such a manner as to permit safe and expeditious movement by ship's propulsion or tugs within 30 minutes in order to move to a pre-planned position. If nested with other ships, it shall be the outboard ship.

b. There shall be no impairment of the ship's normal security and damage control capability.

c. No internal shifting of cargo or ship's ammunition is to be undertaken, unless the ship is berthed at an ammunition terminal or an explosive anchorage.

2-5.1.6. Consistent with deployment schedules and readiness conditions set by higher authority and the standby tug requirements of paragraph 4-3.11, T-AOE, T-AKE, and AS class ships with cargo ammunition onboard may completely secure their engineering plants (cold iron) under the following conditions:

a. Prior concurrence has been obtained per local SOPA instructions and from the commanding officer of the activity providing the cold iron berth.

b. The berth used is equipped with all required services: steam; power adequate to operate all sensing, alarm and firefighting systems; and water in adequate supply and at proper pressure to meet firefighting requirements.

c. Fire and security departments of the shore activity involved are notified 24 hours prior to securing the engineering plant.

d. The ship's damage control capabilities are maintained fully operable: required water pressure maintained on fire mains at all times, and emergency generators and fire pumps capable of immediate and full operations.

e. Handling or shifting of ammunition, either cargo or ship's service allowance, is authorized only if the cold iron berth is at an ammunition terminal. Onloading or offloading of cargo ammunition is not authorized while the ship is in cold iron status unless the ship is berthed in such a manner as to permit safe and expeditious movement by ships propulsion or tug within 30 minutes. Waivers for these conditions will be issued only if adequate tug support is available in accordance with paragraph 4-3.11. The restrictions of this paragraph do not apply to cargo ammunition defined in paragraph 7-10.d.

f. The ship is located in such a manner as to provide for a safe and expeditious departure, if necessary. If nested, it must be the outboard ship. An adequate number of properly trained personnel, as mutually agreed on by the commanding officers of the ship and the shore activity involved, are readily available for handling mooring lines and disconnecting pier services for such departure. One towing hawser is to be rigged forward, and one aft, one the outboard side of each hawser six feet above the waterline so that it is readily accessible for tug use without the ship's assistance. At night, these hawsers are to be illuminated.

g. No hot work shall be undertaken which is potentially hazardous to the ammunition cargo or when ammunition handling is underway at the same pier or wharf. When the ship's damage control capabilities are fully functional, welding, burning, or other hot work can be conducted only within the welding shop, shipfitter's shop and engineering spaces, provided at least one intervening compartment not containing ammunition separates such shops or spaces from spaces containing ammunition. A formal ship's directive signed by the commanding officer will specify those engineering spaces that meet the one-intervening compartment criterion. Additionally, hot work may be performed on topside spaces and areas as long as the one-intervening compartment rule is not violated and the area under consideration for hot work is above the main deck. No hot work shall be performed externally within 100 feet (30 meters) of the skin of the cold iron, loaded cargo ammunition ship. General criteria concerning hot work, respective of berthing, is addressed in paragraph 4-1.16.

2-5.2. HANDLING. The handling of ammunition and explosives in port will be permitted only in those specific locations authorized by site approval or explosives safety deviation, and under the conditions and requirements established in order to assure a proper explosives safety environment during such handling. Each site approval or deviation will establish an explosives limit for each authorized handling pier, berth, point or location, based on the Hazard Class/Division (HC/D) of material being handled. Specific handling regulations that affect ESQD arcs are addressed in paragraph 7-10. Criteria on handling equipment are provided in chapter 10. The general handling regulations and procedures described in the paragraphs below are established to reduce the potential for an explosive incident.

2-5.2.1. Ammunition and explosives handling operations are not to be conducted at any Navy port activity without the permission of the activity commanding officer. Specific ammunition and explosives handling regulations will be developed and published by all DON activities. These regulations will contain instructions for control of electromagnetic radiation (EMR) in the vicinity of any ammunition location. The activity commanding officer is responsible for supervising all ammunition handling operations alongside the ship and on the pier or in boats under their authority. They are also responsible for ensuring the existence of safe ammunition handling conditions. Such authority will include: stopping ammunition handling alongside or onboard ships berthed at their activity if, in the opinion of the designated safety loading officer or safety observer, a dangerous condition exists; stopping actions such as welding or burning onboard or alongside ships berthed at the facility if the action is considered hazardous to ammunition handling for nearby ships; and controlling all transient traffic in the vicinity of ammunition handling, including personnel attached to or serving ships not involved in the handling. Commanding officers of ships handling ammunition shall provide a ship's officer to supervise ammunition operations on deck and will assist the safety representative of the shore activity as requested.

2-5.2.2. Provision shall be made in SOPA instructions for control of electromagnetic radiation (EMR) in the vicinity of any ammunition handling location. Ships approaching such a location, or departing from one, shall be required to silence all transmitters in the 2-32 megahertz (MHz) range. Procedures shall be established for positive control of EMR from ships berthed at an ammunition handling location when ammunition is to be handled.

2-5.2.3. Ammunition and explosives handling should be conducted at ammunition terminals that are designed with adequate ESQD arcs, transportation and necessary resources to minimize associated hazards. Limited handling at other locations provides an increased level of exposure to resources and personnel and should only be done when operational requirements support the risk.

2-5.2.4. The loading/offloading of cargo ammunition and explosives will be performed only at ammunition terminals or explosives anchorages specifically site-approved for that purpose, with the exception of HC/D 1.2.2, HC/D 1.3 and HC/D 1.4 defined in paragraph 7-10.d.

2-5.2.5. Ammunition and explosives will not be offloaded to a pier unless suitable transportation is standing by, nor will ammunition be brought alongside a ship for loading unless the ship is ready to receive it. Ammunition terminals may stage ammunition and explosives on piers to meet immediate loading/offloading requirements; however, the amount must never exceed the site-approved limit, or in any event, a maximum of 500,000 pounds NEW.

2-5.2.6. The grouping of incompatible ammunition will be avoided, to the extent possible, on any pier where ammunition and explosives are handled.

2-5.2.7. In cases when Naval Reserve ships are homeported in non-Navy locations where ammunition has not been authorized, strikedown/strikeup and maintenance movements may be

performed with written authorization from CNO (N4L). Request for such authorization must be submitted via the chain of command, through NOSSA. The request will include a specific description of the berth location, plotted on a map or chart of a scale no greater than 1-inch equals 400 feet. Requests for logistics movements of ammunition must be as event waivers in accordance with paragraph 1-6.7.

2-5.2.8. Combatant Exemption.

2-5.2.8.1. Ammunition and Explosives maintenance/logistical moves and weapons systems operability tests as applied to the combatant exemption are to be conducted internal/inside the skin of the vessel so as not to generate an ESQD arc. When maintenance/logistical moves are required outside/external to the skin of the vessel they shall be conducted within the condition established by the SOPA instruction at a an authorized pier/wharf/berth approved for the HC/D and NEW of the explosives being handled/moved. Emission control (EMCON) will be instituted and the passage or access of non-essential personnel onboard the ship prohibited. Required ship's maintenance on external hatches or doors of weapons systems may be conducted without generation of ESQD arcs provided weapons associated with these openings are not handled or energized.

2-5.2.8.2. The application of power to a weapon without the intent to launch falls under the combatant exemption given that the following requirements and conditions are met:

a. The Weapon System Explosives Safety Review Board (WSESRB) concurs with the operation (see NAVSEAINST 8020.6 (series) for WSESRB processes).

b. The testing is conducted internal to/inside of the skin of the vessel to prevent generation of an ESQD arc.

2-5.2.9. Hazardous materials shall be handled as follows:

a. Fueling operations shall be conducted as described in paragraph 4-1.24.4.

b. Gasoline, either in bulk or drums, oxygen, compressed flammable gases, or any other highly hazardous material shall not be handled simultaneously at the same pier, in the same slip, or at anchorage during ammunition logistic movements, strikedown of ammunition or maintenance movements.

c. The transfer of sludge or other oily waste to a tank truck on the pier, or to a "donut" in the water, shall be considered in the same category as fueling and is covered by the requirements of paragraph 4-1.24.4.

2-5.2.10. Tenders (AS class ships) have several unique ammunition handling requirements. The following criteria addresses those requirements that are in addition to or provide some variation from the general requirements provided in paragraphs 2-5.2 through 2-5.2.9.

a. Tenders are authorized to provide receipt, issue, handling, assembly, disassembly, repair, maintenance, overhaul and test of weapons or weapons components in the weapons shop onboard the tender. Unless specifically authorized by CNO in Defense Readiness Condition (DEFCON) 5, under increased DEFCON, or when departing for sea in 24 hours, the number of explosives warheads or warshot-configured torpedoes or cruise missiles in any workshop shall be limited to the number of operational maintenance lines in the workshop. TYCOMs shall define maintenance lines as they apply to the tenders under their cognizance and shall direct commanding officers to establish, in writing, the

number and location of maintenance lines in each weapons shop. The number of maintenance lines in each shop shall be based upon the amount of usable floor space and the number of personnel available to perform simultaneous operations on multiple weapons. These restrictions are not applicable to tenders supporting FBM sites.

b. Stowage of explosive warheads, warshot-configured torpedoes or cruise missiles, or high explosive components is not authorized in the maintenance workshop or in immediately adjacent spaces on the same deck.

c. Except for tenders supporting FBM submarine sites, over-the-side receipts and issues of explosives, weapons, or components shall be governed by all explosive limits established for the pier or anchorage, as a whole for the approved handling point. Handling shall be phased and controlled to ensure that the authorized explosives limit is not exceeded.

d. Ammunition handled on all tenders must be limited to that issued to, or received from, only one supported ship or activity at a time.

e. Welding and other hot work may be conducted simultaneously with weapons handling, provided the handling route does not traverse such spaces or any compartment immediately adjacent, on the same deck. Welding and other hot workspaces will be designated in writing by the commanding officer.

f. Ammunition handling, except for maintenance movements in weapons shops, is not permitted simultaneously with the handling of gasoline, either in bulk or drums, oxygen, compressed flammable gases or any other highly hazardous material on the same pier, in the same slip, or at anchorage with the tender.

g. Fueling of ships alongside and simultaneous ammunition handling within the tender is permitted for maintenance movements, strikedown/strikeup moves and maintenance operations performed in an authorized weapons shop.

2-5.2.11. Small Quantity Handling Operations. Loading and unloading of thirty pounds or less Net Explosive Weight (NEW) of Hazard Class/Division 1.4S small arms ammunition does not generate an ESQD arc, and is not considered a pierside ammunition handling evolution for the purposes of this manual and NAVSEA OP 4.

CHAPTER 3
CHARACTERISTICS OF AMMUNITION, EXPLOSIVES AND RELATED HAZARDOUS MATERIALS

3-1. INTRODUCTION.

This chapter provides a broad overview of the characteristics and properties of high explosives, ammunition and related hazardous materials. This information provides insight into the basis for the regulations and guidance on safe handling, storage and inspection procedures. These ammunition, explosives and related hazardous materials have the potential to suddenly release large amounts of energy or other lethal effects. Some of the materials within this group are not explosives according to the classic definition of an explosive (i.e., instantaneously reacted by a shock process). Many of the items, such as propellants and pyrotechnics, burn intensely (that is, rapidly reacted by a flame process) or rapidly distribute lethal agents. These items have been grouped together because when they react in a confined area, the adverse effect which they produce on the area is sudden and catastrophic, and has the potential to damage property and injure personnel.

3-2. CHARACTERISTICS OF AMMUNITION AND EXPLOSIVES.

The nature of high explosives and the general processes resulting in the reaction (including detonation) of an explosive are integral elements of ammunition and explosives safety rules, regulations and procedures.

3-2.1. AVAILABLE EXPLOSIVES. There are hundreds of different compositions of explosives which are have been formulated by military, commercial and academic research and development laboratories. Of this large number available, only a few dozen are used commercially due to cost, effectiveness and safety reasons. The number of explosive compositions which are used in military explosives is even less because many do not meet the rigid military requirements for safety, stability, insensitivity, performance, ability to be stored for long periods of time and several other features, many of which are unique to military usage. Due to the unique environment and extreme proximity of storage and use, explosives approved for Navy use must meet safety requirements even more stringent than those used by other services. Qualified military explosives, if properly handled and stored without any adverse external stimuli, can be expected to remain in a safe and serviceable condition for decades and then to operate as intended when required. However, many of the older explosives (which are in the majority) are more sensitive than the forthcoming family of “insensitive” munitions. The Ammunition and Explosives Safety Program, by necessity, is currently focused primarily on the characteristics of the existing and older explosives. The program is in a constant state of transition as newer explosives are added and older explosives are no longer needed. Additional information to that provided in this section can be found in NAVSEA SW010-AG-ORD-010.

3-2.2. COMPOSITION OF HIGH EXPLOSIVES. Most military explosives are solid or liquid substances which are in a metastable state. Metastable substances can remain in a stable state until a strong stimuli (heat, shock or electric charge) causes them to initiate a transaction into another state. Most military explosives can remain in this metastable state for an indefinite period of time. However, upon the proper strong stimuli, they are capable of undergoing the required rapid chemical reaction without the requirement for external oxygen. A few military explosives do not have sufficient oxygen for detonation. These include Fuel Air Explosives (FAE), which are dispersed as an aerosol mist and then detonated, using atmospheric oxygen as one of the reactants. The resistance of the metastable state

to heat is known as stability. The ease with which the chemical reaction can be initiated is known as sensitivity.

3-2.2.1. The single characteristic which separates high explosives from other rapidly reacting chemical compounds is the rate at which they can release energy. During a detonation, the explosive material is consumed at a rate which is 1,000 to 1,000,000 times faster than the rate of burning. The chemical composition and characteristics of military explosives varies depending upon the specific explosive involved. Most explosive compositions contain materials which are by themselves explosives, such as nitroglycerin (NG), RDX, HMX, TNT, or ammonium nitrate (AN). Some explosive compositions contain oxidizers like ammonium perchlorate (AP) and fuels like aluminum (Al) or other substances. The initiators or detonators often contain lead (Pb) or mercury (Hg) compounds. Inert materials like plastics or waxes are used to bind the explosive materials in a usable physical matrix. Compositions of a few typical booster and main charge explosives are listed in table 3-1. More data and explosives formulations may be found in NAVSEA SW010-AG-ORD-010.

Table 3-1. Composition of High Explosives

Explosive	Composition	
CH-6 (booster)	RDX Calcium Stearate Graphite Polyisobutylene	97.5% 1.5 0.5 0.5
Comp A-4 (booster)	RDX Wax	97.0 3.0
Cyclotol 75/25 (main charge)	RDX TNT	25.0 75.0
H-6 (main charge)	RDX TNT Aluminum Comp D-2 Wax	45.1 29.2 21.0 4.7
LX-14 (main charge)	HMX Polyurethane	95.5 4.5
PBXN-109 (main charge)	RDX Aluminum Polybutadiene DOA DHE FEAA IPDI	64. 20. 7.346 7.346 0.26 0.0015 0.9465

3-2.3. INSENSITIVE MUNITIONS. As a result of shipboard ordnance accidents occurring in the decade of the 1960s (see NAVSEA SW020-AD-SAF-010), the Navy established a program to reduce the sensitivity of explosives and related material through development of insensitive munitions (IM) technologies and subsequent incorporation of those technologies into munitions. The Navy IM policy is documented in OPNAVINST 8010.13 (series). The Department of War (DoW) recognized the importance of IM and adopted this policy, applying it throughout the entire department. DoW policy,

documented in DoD Directive 5000.01 (series), requires that all systems containing energetics comply with IM criteria, thus expanding the scope of IM to all services and munitions.

3-2.3.1. IM is not a replacement for safety. Rather, it complements a sound MIL-STD-882 (series) system safety program. IM does not prevent accidents. It prevents accidents from becoming catastrophes. The goal of IM is to make ordnance as safe during production, storage, handling, and transportation as it is lethal in combat. IM does not mean inert; ordnance will always be treated as ordnance, whether or not it is IM. Determining whether a munition or system meets the IM criteria is not subjective. A series of rigorous tests are outlined in MIL-STD-2105 (series) and individual NATO Standardization Agreements (STANAG).

3-2.3.2. The broad objective of this program is to reduce the severity of reaction to the threat stimuli of heat, shock and impact. Achieving IM compliance must be the result of a holistic design approach. Less sensitive energetics cannot provide the one hundred percent solution. The IM program considers the explosive component as a part of a total system, which includes the munition casing, liner material, selection of main charge, booster, and fuzing explosives, initiating systems, containerization, and other contributors such as packaging configurations. The munition, as a total system, is to be made insensitive. This may include features such as case venting to relieve pressure during thermal events or shielding of the container to mitigate the effects of bullet and fragment impacts and sympathetic detonation.

3-2.3.3. In order to implement the IM program, the threat stimuli to munitions were defined and tests were developed to determine the characteristics and performance of candidate insensitive explosives. These tests are outlined in paragraph 3-3. New weapon systems and munitions, in research and development or in product improvement, are required to meet the IM technical requirements specified in NAVSEAINST 8010.5 (series) and MIL-STD 2105 (series). To date, there are two DoW explosive formulations that have passed the requirements to be designated as Extremely Insensitive Substance (EIS): there are PBXN-113 and PBX(AF)-757. These explosives represent a substantial improvement in safety, compared to conventional explosives, although weapons containing these explosives may not pass all of the IM requirements. Detailed characteristics of explosives and their applications are found in NAVSEA SW010-AG-ORD-010 (series).

3-2.4. INITIATION AND DETONATION OF AN EXPLOSIVE MAIN CHARGE. Reaction, leading to detonation, is possible if a very small volume within the explosive could suddenly be raised to a high temperature. This small volume is known as a “hot spot”. The minimum amount of explosive material, external energy and time to cause reaction or detonation are all very small. In general, the smaller volumes must be raised to a higher temperature for a shorter periods of time. In the case of HMX, the diameter of the minimum volume of explosive (the hot spot), within the main charge is generally 1/100 of an inch or less.

3-2.4.1. In some cases this amount of energy might not lead to a detonation, especially at lower temperatures and longer times, which can allow part of the temperature to be lost by conduction or other means. However, in most cases, at the higher temperatures and shorter times, the explosive will detonate and propagate a shock wave into the surrounding explosive material. The energy to start this process is a very small amount of energy, but it is all that is required to detonate a high explosive main charge. In practice, detonators and boosters are designed to deliver many times the minimum amount of energy in order to assure a very high probability of detonation.

3-2.4.2. From a safety perspective, the energy associated with a “hot spot” is all of the energy needed to accidentally cause a deflagration or a mass detonation. These temperatures are for very rapid application of heat. HMX is reported to detonate when heated to 600°K (621°F) for 5 seconds or

when heated at 475°K (396°F) for longer periods of time. These heating values are for HMX, one of the relatively new and more stable explosives. Other temperatures for older types of explosives can be expected to be lower. This means that they inherently are not as stable as HMX. At the lower end of the stability scale is liquid NG, which has a lower hot spot temperature. Rough handling of NG can cause compression of small air bubbles in the liquid which can produce sufficient heat to cause detonation.

3-2.5. DELIBERATE DETONATION OF AN EXPLOSIVE. The initiator, detonators, and boosters used to detonate military ammunition and explosives must supply energy far in excess of the minimum threshold amounts needed to initiate a “hot spot”. The process of deliberately detonating an explosive main charge generally involves four items or components. The first item is a reliable source of energy or power, the second is an initiating charge, the third is a booster charge, and the fourth is the explosive main charge itself.

3-2.5.1. The first component, which is the source of energy, can be in the form of a time fuze, an electrical or electronic power source, a mechanical striker pin, a shock tube or other strong source of mechanical, electrical, chemical or thermal energy. These power sources have the energy to create a very high temperature (for a short period of time) within a small portion of the second component, which is the initiating charge. The initiating charge is often in the form of a detonator or blasting cap. The explosive material within the initiating charge is more sensitive than the explosive material used in the other two components (the booster and the main charge). The initial amount of explosive material within the initiator which is heated to the high temperature is small, but is many times larger than the minimum volume known as the “hot spot”. The resulting high temperature causes portions of explosives within the initiator to detonate. Once started, the detonation process will quickly spread until all of the initiator is consumed. The initiator is butted against or embedded in another explosive (the booster or third component) which is less sensitive, but larger than the initiator. The initiator has several times the amount of energy needed to detonate the booster. (In many Navy munitions the initiator or detonator is rotated “out of line” from the booster or is removed until the munition is armed.) The detonation of the initiator causes the booster to detonate, which then causes the main charge (or fourth component) to detonate. The energy to initiate an explosive main charge is the same irrespective of the size of the explosives main charge, whether it is one ounce or one ton.

3-2.5.2. This entire process occurs in a very short time (less than one thousandth of a second), because the speed of initiation and the speed of the detonation wave, within the explosive, is generally in the order of 7,500 meters/second (24,750 feet/second).

3-2.5.3. The explosive train, from the power source to the explosives main charge, is designed from a total systems perspective. Each component and part of the external power sources, for any system or item, are tested and qualified. Likewise the explosives which are contained within the initiators, boosters and main explosive charges are tested, evaluated and qualified.

3-2.6. DETONATION OF A FUEL AIR EXPLOSIVE (FAE). FAE weapons contain the liquid FAE material (commonly, ethylene oxide), a central burster charge and one or more ignition charges. These materials do not have sufficient oxygen to support a detonation. The detonation of a FAE weapon differs from the detonation of a conventional high explosive weapon because the FAE detonation is a two step operation. In the first step, the FAE weapon is positioned at a desired height above the target and the burster charge is detonated. This centrally located burster charge ruptures the outer case of the warhead and sprays the FAE material in all directions. The FAE mixture does not detonate at this time because the fuel air ratio is too rich. The second step occurs a few milliseconds later, when the fuel air ratio of the resulting aerosol mist is correct. At that time, the ignition charges are initiated. This

causes the cloud of FAE vapor to detonate. The close in pressures are not as high as those for a high explosive main charge, but they are uniformly distributed over a much larger area.

3-2.7. INADVERTENT DETONATION OF AN EXPLOSIVE. As indicated above, if an explosive is inadvertently exposed to a high temperature for a significant time, it will probably detonate. However, there are several other conditions or stimuli which can supply the energy required to create a small volume of high temperature within the explosive. These stimuli have a good probability of starting the detonation process because their form of energy can be converted into the small amount of heat required in the explosive. The most common of these involves the conversion of mechanical forces and energy into high temperatures within the explosives.

3-2.7.1. There are five major subdivisions of activities or situations, which can adversely impact upon ammunition and explosives safety. These are: (1) rough handling of ammunition and explosives, (2) the use of improper procedures or improper tools, (3) exposure of ammunition and explosives to excesses of certain conditions, (4) natural events such as lightning, and (5) safety situations due to byproducts or residue from the ammunition and explosives from operations involving the ammunition and explosives. Depending upon the specific explosive involved and the situation, the ammunition and explosives might inadvertently detonate, or the items or shipping container may be rendered unserviceable.

3-3. TEST AND EVALUATION OF NAVY EXPLOSIVES.

3-3.1. TESTS TO DETERMINE THE PROPERTIES OF NAVY EXPLOSIVES. A series of tests has been evolved to identify and qualify the most suitable explosives for Navy application. These tests have evolved over several decades and are directed at assessing the properties of explosives irrespective of the application in hardware. Explosives are metastable substances which are capable of undergoing a violent transformation. Some explosive substances are more stable than others. Some are very stable with respect to long term storage. Others are more stable with respect to impact, heat, friction or initiation by unprogrammed stimuli. The tests conducted and the results of these tests are listed in NAVSEA SW010-AG-ORD-010. Examples of the types of tests are shown in table 3-2.

Table 3-2. Tests to Determine the Properties of Navy Explosives

Impact Sensitivity	Growth and Exudation
Gap Test	Self Heating
Friction Sensitivity	Detonation Velocity
Electrostatic Sensitivity	Thermal Stability
Vacuum Stability	Aging Characteristics

These tests are outlined in more detail in Allied Ordnance Publication (AOP) - 7.

3-3.2. HAZARD ASSESSMENT TESTS. MIL-STD-2105 (series) prescribes the hazard assessment tests for *non-nuclear ordnance. These tests are comprised of two series: the basic safety tests and the IM tests, and are described in table 3-3.

Table 3-3. Tests of Explosives Contained in MIL-STD-2105 (Series)

Basic Safety Tests	Insensitive Munitions Tests
28-day temperature and humidity test.	Fast Cook-off (FCO) test.
4-day temperature and humidity test.	Slow Cook-off (SCO) test.
12-meter (40-foot) drop test.	Bullet Impact (BI) test.
Vibration test.	Fragment Impact (FI) test.
	Sympathetic Detonation (SD) test.
	Shaped Charge Jet (SCJ) test.
	Shaped Charge Jet Spall Impact test. (This test is only required if determined to be a credible threat as determined by a Threat Hazard Assessment)

3-3.2.1. Passing Criteria. Passing criteria for the basic safety tests is prescribed in MIL-STD-2105 (series), while passing criteria for the IM tests is found in STANAG 4439 (series), noted in table 3-4. Definitions of reaction responses are provided in AOP-39 (series). Typical passing criteria is summarized in table 3-4.

Table 3-4. Passing Criteria for Hazard Assessment Tests

Basic Safety Tests	Insensitive Munitions Tests
No reaction of the explosive	Fast Cook-off (FCO) test (STANAG 4240) – No response more severe than burning (Type V)
No exudation containing explosive material	Slow Cook-off (SCO) test (STANAG 4382) – No response more severe than burning (Type V)
Explosives do not crack or separate in a manner which would create a hazardous condition	Bullet Impact (BI) test (STANAG 4241) – No response more severe than burning (Type V)
All safety devices remain in the safe position or safe condition	Fragment Impact (FI) test (STANAG 4496) – No reaction more severe than burning (Type V)
The structural integrity of the items is not compromised by corrosion, loosening of joints or other physical distortions	Sympathetic Detonation (SD) test (STANAG 4396) - No response more severe than explosion (Type III) of acceptor munitions
	Shaped Charge Jet (SCJ) test (STANAG 4526) – No response more severe than explosion (Type III)
	Spall Impact test (MIL-STD-2105C) - No sustained burning occurs as a result of the spall impact test

3-3.3. QUALIFICATION OF NAVY EXPLOSIVES. NAVSEAINST 8020.5 (series) provides the policy and procedures for approval of explosives for Navy use. The Navy has large quantities of older, but proven explosives. Many types of explosive substances, pyrotechnics and propellants have been developed by or for the Navy. New explosives have been developed to increase the performance of older explosives, to decrease their sensitivity, to prolong their service life or to improve some specific characteristic. Currently, the stocks of Navy explosives have been divided (by a test program) into the following five categories according to their general utility.

a. Approved for New Applications. Explosives which have been tested and meet the requirements of the current IM program. This includes materials such as HNS, PBX and PBXN explosives.

b. Final (Type) Qualified. The explosive has been tested, evaluated and has been approved by the Weapon System Explosives Safety Review Board (WSESRB) in at least one Navy application.

c. Qualified. Tested, evaluated and judged to be safe and suitable for use in Navy applications.

d. Waivered or Restricted. An explosive which, by test or operational use, has been approved only for a specific or unusual situation.

e. Undesirable or Obsolete. Tested, evaluated and judged to present a higher risk. Generally not approved for use in Navy munitions or for transport on Navy ships.

Additional information of these explosives can be obtained from NAVSEA SW010-AG-ORD-010, which is the authorized source of this data.

3-4. HAZARDS DUE TO TRIBOELECTRIC CHARGING OF GASES, VAPORS, LIQUIDS, AND DUSTS.

Gases, vapors, liquids, dusts and other process ingredients contacting, sliding along, or impacting a surface during handling/processing can become charged, a state known as triboelectricity. The amount of charging is dependent on ingredient composition, ingredient velocity, surface material, and surface properties involved. Ingredients can become charged even though the contacting surface is grounded metal (e.g., metal chute, metal conduit).

3-4.1. CHARGE ACCUMULATION AND CHARGE DECAY. The higher the bulk resistivity of the ingredient, the longer it takes for the charges to move to/from ground. Charge decay rates can be very slow (hours, days, or longer) if the ingredient has a high bulk resistivity. This means when a charged material with a high resistivity is transferred to a vessel, proper grounding and bonding of the vessel is insufficient to prevent charge accumulation inside the vessel. For ingredients with low bulk resistivity handled/processed with grounded metal equipment, significant charge accumulation is generally not possible because charges are conducted to ground nearly as fast as they are generated.

3-4.2. DANGEROUS CHARGE ACCUMULATION AND IGNITION OF FLAMMABLE AND COMBUSTIBLE MATERIALS. Charges create electric fields. When charges in a vessel or mixer accumulate faster than they decay, electrostatic discharges can occur if the electric field reaches breakdown levels (for air, 3 MegaVolts per meter). The electric field level in a vessel depends on many things including charge density, vessel volume, and vessel geometry. When the energy in the electrostatic discharge exceeds the minimum ignition energy of the flammable or combustible ingredient, ignition may occur. More than one kind of ingredient may be present during processing. For example, the energy in electrostatic discharges caused by hazardous accumulations of a charged powder may ignite flammable concentrations of vapors, such as solvent vapors, that may also be

present during processing. Flammable vapors generally have much lower minimum ignition energies than explosive powders.

3-4.3. PROCESS ANALYSIS. Small scale charging and charge density experiments can be performed to determine if a particular process ingredient has a tendency to charge during processing/handling. Charge decay rates can be measured with instruments. This information, along with process variables and equipment geometry, can be used to estimate the level of hazard present in a particular process.

3-4.4. PREVENTION OF HAZARDS DUE TO TRIBOELECTRIC CHARGING OF PROCESS INGREDIENTS. Although insufficient to prevent the hazard, proper grounding and bonding of process equipment helps reduce the hazard by preventing charge accumulation on the bonded item and by providing a path to ground for contacting charges. Additional sources of ESD can be removed by grounding all handling personnel with the use of legstats or conductive shoes and a conductive floor or wrist-stats. In addition, the following measures may be taken to reduce the hazard[1]:

a. Prevent and reduce charging by using conductive materials. If possible use aqueous solutions, alcohols, and polar solvents. If possible, avoid highly insulating plastic containers and bags. Use conductive drive belts. Use conductive pipes. Use conductive filter materials for dust filters if the presence of flammable vapors is suspected.

b. Limit the flow velocity of liquids and of gases containing dust and liquid particles. Avoid turbulence in chargeable liquids.

c. Avoid explosible mixtures and aerosols. Remove gases, vapors and dusts by suction at the source. Work with flammable liquids at temperatures at least 5 degrees Celsius below their flash point. Consider the increased ignitability of hybrid mixtures when combustible dusts or powders are present simultaneously with flammable liquids. Transport flammable liquids to vessels by suction, and discharge (blow out) by nitrogen pressure. Work under inert gas with flammable liquids.

3-4.5. REQUIREMENT. Process designs must address electrostatic charge accumulation hazards as part of process hazard analysis and control (see paragraph 2-1.2).

3-5. CHARACTERISTICS OF PROPELLANTS.

3-5.1. SOLID PROPELLANTS (CAST OR PELLETS). Solid propellants are substances or mixtures of substances which are required to burn in a controlled manner in devices such as rocket motors, guns, or gas generators and are typically classified as Hazard Class/Division (HC/D) 1.1 or HC/D 1.3 explosive materials. Propellants comprise a wide range of formulations for various applications. Propellants, in their application, must burn in a controlled manner and produce high pressure gas to perform work. Propellants are relatively insensitive to initiation by shock and tend to have a much larger critical diameter than high explosives. In some rocket motor applications, the propellant grain can be considerably larger than the critical diameter. Under certain abnormal conditions, such as physical damage to the propellant, deflagration to detonation transition can occur.

3-5.2. ENERGETIC LIQUIDS. Energetic liquids are substances or mixtures of substances which are required to burn in a controlled manner in devices such as missiles, projectiles, torpedoes or other devices. These materials are also used to generate gases to drive turbines and for powering auxiliary

[1] From Expert Commission for Safety in the Swiss Chemical Industry (ESCIS), "Static Electricity: Rules for Plant Safety, Plant/Operations, Vol. 7, No. 1, (January, 1988), pp. 1-22.

devices in weapon systems. The physical and chemical properties of commercially available liquid fuels may be obtained from standard reference sources. Energetic liquids are also as varied as their uses. These may be as monopropellants, bipropellants or hybrids making use of liquids and solids.

a. Monopropellants are generally single substances or mixtures which burn when ignited. An example of this type of propellant is the OTTO fuel used to power torpedoes.

b. Bipropellants are generally comprised of separately stored fuels and oxidizer materials that are mixed and ignited in a combustion chamber. The fuel and oxidizer components may be hypergolic and ignite spontaneously on contact or may require an ignition source to initiate the reaction.

3-5.3. HYBRID PROPELLANTS. Hybrid propellants are generally comprised of solid fuels, such as aluminum or boron, which are reacted with oxidizing liquid materials.

3-5.4. PROPELLANTS FOR INSENSITIVE MUNITIONS. The objectives of the IM program were initially directed toward making the explosives portion of the munition insensitive. Later, the technology base in propellants was increased and in the mid-1980 period more attention was given to reducing the vulnerability of propellants with emphasis on the fast cook-off requirements. The technology of insensitive propellants is still immature compared to the technology base for insensitive explosives. However, several propellant formulations have been identified in an effort to reduce the violence of the reaction during cook off tests. Examples include bismuth trioxide and ammonium perchlorate in an aluminized boost propellant and ammonium nitrate with ammonium perchlorate in a reduced smoke propellant. The use of graphite-wound composite cases has reduced the vulnerability of some motor cases. In general, a system approach with both a new propellant and new case, is needed to meet IM requirements. Neither the use of just an IM propellant or just an IM case technology will necessarily allow a munition to be fully IM compliant.

3-6. CHARACTERISTICS OF PYROTECHNICS.

The description, operation and maintenance of pyrotechnic devices is covered in NAVSEA SW050-AB-MMA-010/ NAVAIR 11-15-7. The pyrotechnic and screening devices described in that manual contain combustible chemicals which, when ignited, rapidly generate a flame of intense heat, flash, infrared radiation, smoke or sound display (or combinations of these effects) for a variety of purposes. Compared to other explosive substances, pyrotechnics are more adversely affected by moisture, temperature, and rough handling. Some compositions may become more sensitive, and even ignite, when exposed to moisture or air. Mixtures which contain chlorates and sulfur are susceptible to spontaneous combustion. Most pyrotechnics produce a very hot fire that is difficult to extinguish and most burn without serious explosions. Many chemicals used in pyrotechnics produce toxic effects when ignited. Other pyrotechnics, which contain propelling charges create an extremely hazardous missile hazard if accidentally ignited.

3-6.1. SIGNALING. Pyrotechnics for signaling can be projected or released from small pistol-like devices, hand held devices, hand manipulated devices, rifle launched devices and colors delivered by.38 caliber or 9 mm ammunition. Other signaling devices are used to indicate the impact points of bombs or large rounds. Such devices produce a variety of colors (red, green yellow white, orange, red/orange, blue and others).

3-6.2. SMOKE SCREENING. This class of pyrotechnics are generally considered to be nontoxic. The material used in these devices may be HC (a mixture of hexachlorethane, zinc oxide and aluminum), WP (white phosphorous), PWP (plasticized white phosphorous), SGF2 oil (smoke generated fog oil) and RP (red phosphorous). Many of these substances will ignite if exposed to water or to air. The

firefighting efforts must take into account the special nature of these materials which react to water and to air. They can become toxic if used in large amounts in confined spaces.

3-6.3. SIMULATORS AND DECOYS. This class of pyrotechnics are intended to produce smoke, flame and sounds which approximate that produced by actual weapons used in military operations in a ground or surface environment. These items can simulate explosives, booby traps, artillery flash, artillery impact, hand grenades, artillery air burst and other similar events.

3-6.4. ILLUMINATING. Illuminating devices are normally powdered magnesium mixed with an oxidizer. Depending upon the size and application, the devices may be capable of providing a high intensity white light for relatively long periods of time (one half to six minutes). They burn with a high temperature and once ignited are difficult to extinguish. They may be ignited or activated by rough handling. Delivery can be by aircraft, mortar, gun, grenade or may be hand emplaced as a booby trap.

3-6.5. DYE MARKER DEVICES. Items previously in this class of devices, used to produce a color mark on water, are now obsolete or unserviceable.

3-6.6. CHEMILUMINESCENT DEVICES. This class is not a true pyrotechnic. The devices produce a light, but are cold. They do not constitute an ignition source. Items in this class include devices similar to the commercial two-component wands known as Chemlite. If the container is punctured, the material has a highly obnoxious odor and can irritate the nose, throat and bronchial tubes.

3-6.7. WEATHER MODIFICATION DEVICES. This class of pyrotechnics is launched from aircraft. When activated the device ejects pyrotechnic material, which, upon burning, forms nuclei that induces freezing of super cooled water in the atmosphere. The devices contain a HC/D 1.3 explosive to disperse the pyrotechnic material. In the event that the device is activated accidentally, the smoke from the generator is toxic. Gas masks are not effective. Atmosphere supplying respirators, such as self-contained breathing apparatus (SCBA) must be used.

3-6.8. PYROTECHNICS FOR INSENSITIVE MUNITIONS. Of the three explosive substances (explosives, propellants and pyrotechnics) pyrotechnics are the most vulnerable to unplanned stimuli. Progress toward formulation of insensitive pyrotechnics has been slower than the progress for insensitive explosives or insensitive propellants. Test procedures and test equipment have been standardized. Safety test data is being compiled and analyzed. The potential hazards posed by the various classes of pyrotechnic materials are summarized in table 3-5.

Table 3-5. Summary of Hazards of Pyrotechnics

Class of Pyrotechnic	Type of Potential Hazard/Safety Precautions
Signaling	Cocked firing mechanisms Lack of safety devices on many projectors Ballistic damage upon firing from the projector Possible injury of user or nearby personnel Very intense fire produced by pyrotechnic Potential toxic hazard
Screening Agents	Generally non-toxic Some ignite spontaneously if exposed to air Others ignite spontaneously if exposed to water Toxic when in high concentrations
Simulators and Decoys	High concentration of energy Minimum safety devices
Illuminating	Very intense fire produced by pyrotechnic Difficult to extinguish fire Ballistic damage upon firing from the canister Possible injury of user or nearby personnel
Dye Marker Devices	Declared obsolete or unserviceable Contain explosive burster charge
Chemiluminescent Devices	Little if any hazard unless punctured If punctured, can have obnoxious and irritating odor Avoid eye and skin contact with contents
Weather Modification Devices	Contains HC/D 1.3 explosive Smoke from generator is toxic Gas mask is ineffective Must use oxygen breathing apparatus

3-7. CHARACTERISTICS OF CHEMICAL AMMUNITION.

Chemical ammunition and chemical munitions are described in NAVSEA SW073-AC-MMA-010. Munitions which involve two or more chemical group designations (A, B, C or D) shall not be stored together except as allowed by NAVSEA SW020-AC-SAF-010 or upon specific authorization by the Naval Ordnance Safety and Security Activity (NOSSA).

3-7.1. CHEMICAL GROUP A: LETHAL – TOXIC. These agents are highly toxic in either liquid or vapor form. They can be absorbed into the body through the respiratory tract, the skin, or eyes. The agents can cause serious injury to the body or death depending on the concentration and degree of exposure. Protection from these agents requires full coverage with impermeable cloth and protective masks. The Department of the Navy does not possess weapons containing chemical agents in its inventory.

Group A chemical ammunition are listed in table 3-6.

Table 3-6. Group A Chemical Ammunition (Lethal-Toxic)

Symbol	Name
GB	Sarin
VX	VX
H	Mustard
HD	Mustard (distilled)
HT	Mustard (T-mixture)
L	Lewisite
HN-1	Nitrogen mustard

3-7.2. CHEMICAL GROUP B: RIOT CONTROL. This group includes agents which are toxic or incapacitating when inhaled, ingested or on the skin. The agents include riot control agents, choking agents, blood agents and screening smokes. These agents will cause varying degrees of skin irritation. Approved protective clothing must be provided and worn. Chemical munitions classified as Group B shall not be carried aboard ship unless specifically authorized by CNO.

Group B chemical ammunition are listed in table 3-7.

Table 3-7. Group B Chemical Ammunition (Riot Control, Signal Cartridges)

Symbol	Name
CS	O-Chlorobejzalmalonitrile
CS-1	O-Chlorobejzalmalonitrile-silica aerogel
CS-2	O-Chlorobejzalmalonitrile-silica aerogel & water resistant coating
CN	Chloroacetophenone
CNS	Liquid Lachrymator
CNB	Liquid Lachrymator
DM	Diphenylaminechloroarsing (adamsite)
FM	Titanium Tetrachloride
FS	Sulfur trioxide chlorosulfonic acid mixture
CG	Phosgene
CL	Chlorine
AC	Hydrocyanic Acid
CK	Cyanogen chloride
PS	Chloropicrin
DA	Diphenylchloroarsine
BZ	Bromobenzl
HC	Hexachloroethane
TA	Terephthalic Acid
RP	Red Phosphorus

3-7.3. CHEMICAL GROUP C: SMOKE. This group includes materials such as WP and PWP which are spontaneously combustible. Special firefighting techniques and materials are required. Personnel shall be protected with fire and heat resistant clothing. Toxic fumes are a minimal hazard. Group C chemical ammunition are listed in table 3-8.

Table 3-8. Group C Chemical Ammunition (Smoke)

Symbol	Name
WP	White Phosphorus
PWP	Plasticized White Phosphorous

3-7.4. CHEMICAL GROUP D: INCENDIARY. Incendiary devices are antimaterial compounds which generate sufficient heat to destroy other materials by thermal degradation or combustion. Conventional

firefighting methods are usually not effective. The fumes and combustion products are, in most cases, highly toxic when inhaled or upon contact with the skin. Personnel should be equipped with full protective equipment when combating fires involving incendiary materials. Incendiary agents are shown in table 3-9.

Table 3-9. Group D Chemical Ammunition (Incendiary)

Symbol	Name
TH	Thermite
	Triethylaluminum
	Plasticized Triethylaluminum
	Triethanol amine
	Triphenylamine
NP	Napalm
IM	Isobutyl methacrylate

3-8. GENERIC CLASSES OF MISHAPS.

During their life cycle, explosive substances may be exposed to conditions which can cause them to become unserviceable or to react and cause damage to the immediate area. Many explosive related accidents or incidents do not result in the mass detonation, deflagration or burning of the item. In many instances an expensive ordnance item, or its required container, is rendered unusable for combat or training. In addition, the time, effort and expense of proper disposal of the item is incurred. Some of the more prevalent situations include:

3-8.1. ROUGH HANDLING.

a. Dropping of an item, during handling, beyond a specified threshold distance

b. Puncture of the protective case or the item by a fork of a fork lift

c. Rough handling which results in dents, cuts, bends or other deformity

d. Impact due to the fork of a fork lift

e. The impact of a bullet or piece of shrapnel

f. The impact from the dropping the explosive item

g. The impact from the dropping of another item on the explosive item

h. Friction due to rubbing or dragging

i. Energy from the detonation of an adjacent explosive

3-8.2. IMPROPER PROCEDURES.

a. Electrical discharge generated by a moving vehicle

b. Electrical discharge due to an improper tool

c. Static electricity discharge due to improper grounding

d. Static electrical charge due to movement of explosive components

e. Static electrical charge due to dragging

f. Exposure to high powered Radio Frequency (RF) fields

g. Heat and friction due to operations in areas containing explosive dust

h. Static electrical discharge from an explosives and ammunition worker in a plant

i. Contamination with chemicals (especially alkalis), foreign materials or other nonexplosive components

j. Unauthorized smoking by workers in explosives and ammunition areas

k. Improper handling at very low temperature

l. Static charge generated by the motion of granular or powdered explosives

3-8.3. EXCESS EXPOSURE.

a. Heat generated by a fire

b. Self heating due to a combination of improper storage, poor ventilation and high temperature

c. Exposure to unauthorized “open flames”

d. Exposure of the items to conditions which cause corrosion and deterioration

3-8.4. NATURAL EVENTS.

a. Heat generated by a lightning strike

b. Prolonged storage at very high or very low temperatures

c. High solar radiation

3-8.5. BYPRODUCTS OR RESIDUE.

a. Of explosive dusts, vapors and fumes

b. Of solid and liquid propellants

c. Of pyrotechnics

d. Leakage and exudate of explosive byproducts

3-9. HAZARD CLASSIFICATION OF AMMUNITION AND EXPLOSIVES.

The Department of War Explosives Safety Office (DWESO) standards and criteria contained in Defense Explosives Safety Regulation (DESR) 6055.09 using the United Nations Organization (UNO) hazard classification system, have been incorporated in this publication in compliance with DoW directives. The DoW uses the UNO classification system for dangerous materials to identify the hazardous characteristics of ammunition and explosives. The UNO classification system contains nine hazard classes as indicated in table 3-10, plus a non regulated category. Ammunition and explosives are assigned to the class that represents an item's predominant hazard characteristic. Class 1 applies where the explosive hazard predominates.

3-9.1. CLASS/DIVISIONS. Hazard classes are further divided into divisions that indicate the primary characteristic and associated hazards. These divisions are indicated in table 3-10. Hazard Classes and Divisions (HC/D) are designated using decimal notation. A Class 1, Division 1 hazard, for example is designated by HC/D 1.1. Placards which identify the HC/D are used to identify the material during storage, handling and transportation. In the event of an accident or a fire, the personnel who respond will know what type of material is involved.

3-9.2. MINIMUM SEPARATION DISTANCE. As a further refinement, a numerical figure in parenthesis is shown to the left of the HC/D designator to indicate the minimum separation distance, in hundreds of feet, needed for protection from debris, fragments, and firebrands when distance alone is relied on for protection; for example, (18)1.1, (08)1.2, or (06)1.3. In addition, HC/D 1.2 is further divided into three subdivisions, HC/D 1.2.1, 1.2.2, and 1.2.3 to account for the magnitude of the effects of an explosion; see paragraphs 7-8.2.1 and 7-8.2.2.

3-9.3. ASSIGNING HC/DS. NAVSEAINST 8020.8 (series) shall be used as a basis for assignment of HC/D to all ammunition and explosives.

Table 3-10. Hazard Classes, Divisions and Associated Hazards

Division Designator	Type of Hazard
Class 1. Explosives.	
1	Mass explosion
2	Fragment producing; non-mass explosion
3	Mass fire, minor blast and/or minor fragment; non-mass explosion
4	Moderate fire, no significant blast or fragment; non-mass explosion
5	Very insensitive explosive substance with a mass explosion hazard
6	Extremely insensitive explosive article; non-mass explosion
Class 2. Gases.	
1	Flammable gas
2	Non-flammable, non-poisonous compressed gas
3	Gas poisonous by inhalation
Class 3. Flammable Liquids.	
Class 4. Flammable Solids.	
1	Flammable Solid
2	Spontaneously combustible material
3	Dangerous when wet material
Class 5. Oxidizing Substances and Organic Peroxides.	
1	Oxidizer
2	Organic peroxide
Class 6. Toxic and Infectious Substances.	
1	Poisonous material
2	Infectious substance
Class 7. Radioactive Materials.	
Class 8. Corrosive Materials.	
Class 9. Miscellaneous Hazardous Materials.	

The numerical order of the classes and divisions is not that of the degree of danger.

3-10. STORAGE COMPATIBILITY GROUPS.

Ammunition and explosives may not be stored together with dissimilar materials or items that present positive hazards to the munitions. Thus, they can not be stored with flammable or combustible materials, acids or corrosives unless they have been assessed to be compatible. Different types, by item and division, of ammunition and explosives may be mixed in storage provided that they are

compatible. Ammunition and explosives are assigned to a storage compatibility group (SCG) when they can be stored together without increasing significantly either the probability of an accident or for a given quantity, the magnitude of the effects from such an accident. Thirteen groups are established (A, B, C, D, E, F, G, H, J, K, L, N & S). The assignment of an item of ammunition or explosives to a group depends on several factors which are listed in paragraph 3-9.1. All ammunition and explosives assigned Class 1 shall be assigned a SCG. Not regulated ammunition and explosives and those assigned to Classes 2 through 9 may have a SCG assigned. Mixing of compatibility groups in storage is permitted as shown in table 3-10 providing the material is in its packaging configuration. Additional information on storage compatibility, including requirements for movements over public highway or railcars, is found in SW020-AC-SAF-010.

3-10.1. CRITERIA FOR ASSIGNING COMPATIBILITY GROUPS. A compatibility group accompanies the hazard class to complete the hazard classification designation. In the event that ammunition has its own initiator assembled within it, the phrase “with its own means of initiation” is used. If the initiator is packaged separately in such a manner that the initiation of the “initiating” device will not cause initiation of the ammunition as further defined in paragraph 11-2.2.e, then the phrase is not appropriate. Considerations which are used in developing the compatibility groups include but are not limited to:

a. Chemical and physical properties.

b. Design characteristics.

c. Inner and outer packaging configuration.

d. Hazard classification.

e. Net explosive weight.

f. Rate of deterioration.

g. Sensitivity to initiation.

h. Effects of deflagration, explosion, or detonation.

3-10.2. COMPATIBILITY GROUP DESCRIPTIONS. Compatibility groups are described as follows:

a. Group A: Initiating (Primary) explosives. Bulk initiating explosives that have the necessary sensitivity to heat, friction, or percussion to make them suitable for use as initiating elements in an explosive train. Examples include bulk lead azide, lead styphnate, mercury fulminate, tetracene, dry cyclonite (RDX), and dry pentaerythritol tetranitrate (PETN). Group A materials are prohibited aboard combatant ships.

b. Group B: Detonators and similar initiating devices not containing two or more effective protective features. Items containing initiating explosives that are designed to initiate or continue the functioning of an explosive train. Examples include detonators, blasting caps, small arms primers, and fuzes.

c. Group C: Bulk propellants, propelling charges, and devices containing propellant with, or without, its own means of ignition. Examples include bulk single-, double-, or triple-base, and composite propellants, rocket motors (solid propellant), and propelled ammunition and explosive with inert projectiles.

d. Group D: Bulk black powder; bulk high explosive (HE); and ammunition and explosives without a propelling charge, but containing HE without its own means of initiation; that is, no initiating device is present or the device has two or more effective protective features. Examples include bulk trinitrotoluene (TNT), Composition B, and black power; bulk wet RDX or PETN; bombs, projectiles, cluster bomb units (CBU), depth charges, and torpedo warheads.

NOTE

Where sufficient stowage space is available, it is desirable to store bulk high explosives (HE) separately from ammunition containing HE even though they are both in the same compatibility group.

e. Group E: Ammunition and explosives containing HE without its own means of initiation (that is, no initiating device is present or the device has two or more effective, protective features), and either containing, or with, a solid propelling charge. Examples include artillery ammunition and explosives, rockets, or guided missiles.

f. Group F: Ammunition and explosives containing HE with its own means of initiation; that is, the initiating device present has less than two effective, protective features, and with or without a solid propelling charge. Examples include HE grenades, sounding devices, and similar items having explosive trains with less than two effective, protective features.

g. Group G: Illuminating, incendiary, and smoke (including hexachlorethane) or tear-producing ammunition and explosives excluding those that are water-activated (without safety feature) or that contain White Phosphorus (WP) or a flammable liquid or gel. Examples include flares, signals and pyrotechnic substances.

NOTE

Some compatibility group G articles may contain air activated (pyrophoric) material. These articles are assigned a “G” only if they are designed such that the pyrophoric properties in the storage and transportation configuration do not present a special risk.

h. Group H: Ammunition and explosives containing WP. Ammunition and explosives in this group contain fillers that are spontaneously flammable when exposed to the atmosphere. Examples include WP and plasticized WP.

i. Group J: Ammunition and explosives containing flammable liquids or gels other than those that are spontaneously flammable when exposed to water or the atmosphere. Examples include liquid- or gel-filled incendiary ammunition and explosives, fuel-air explosive (FAE) devices, and flammable liquid-fueled missiles and torpedoes.

j. Group K: Ammunition and explosives containing toxic chemical ammunition. Ammunition and explosives in this group contain chemicals specifically designated for incapacitating effects more severe than lachrymation (tear-producing). Examples include artillery or mortar ammunition and explosives (fuzed or unfuzed), grenades, rockets and bombs filled with a lethal or incapacitating chemical agent.

k. Group L: Ammunition and explosives not included in other compatibility groups. Ammunition and explosives having characteristics that present a special risk that does not permit storage with other

types of ammunition and explosives, or other kinds of explosives, or dissimilar ammunition and explosives of this group. Examples include water-activated devices (without safety feature), pyrophorics and phosphides and devices containing these substances, prepackaged hypergolic liquid-fueled rocket engines, triethyl aluminum, plasticized triethyl aluminum, and damaged or suspect ammunition and explosives of any group.

l. Group N: Ammunition and explosives containing only EIS. An example is hazard Class/Division 1.6 ammunition and explosives.

m. Group S: Ammunition and explosives that present no significant hazard. Ammunition and explosives packaged or designed so that any hazardous effects from accidental functioning are limited to the extent that they do not significantly hinder firefighting.

Projections shall not exceed 6 ft-lb (8 joules (J)) in energy. Examples include explosive switches or valves, and some small arms cartridges.

Table 3-11. Storage Compatibility Chart for Shore Activities

GROUPS	A	B	C	D	E	F	G	H	J	K	L	N	S
A	X	Z											
B	Z	X	Z	Z	Z	Z	Z					X	X
C		Z	X	X	X	Z	Z					X	X
D		Z	X	X	X	Z	Z					X	X
E		Z	X	X	X	Z	Z					X	X
F		Z	Z	Z	Z	X	Z					Z	X
G		Z	Z	Z	Z	Z	X					Z	X
H								X					X
J									X				X
K										Z			
L													
N		X	X	X	X	Z	Z					X	X
S		X	X	X	X	X	X	X	X			X	X

NOTES:

1. The marking “X” at an intersection of the above chart indicates that these groups may be combined in storage. Otherwise, mixing is either prohibited or restricted per note 2 below.

2. The marking “Z” at an intersection of the above chart indicates that, when warranted by operational considerations or magazine non-availability, and when safety is not sacrificed, logical mixed storage of some items of different groups may be authorized by NOSSA upon written request. Mixing of limited quantities of some groups, as authorized by note 5 below, does not require a written request. Authorization is not to be considered a waiver. Combinations that violate the principles of paragraph 3-9 require justification by waiver or exemption. Examples of acceptable combinations of class 1 are:

a. Division 1, group A initiating explosives with division 1, group B fuzes not containing two or more independent safety features.

b. Division 3, group C bulk propellants or bagged propelling charges with division 3, group G pyrotechnics without their own means of initiation.

3. Equal numbers of separately packaged components of complete rounds of any single type of ammunition may be stored together. When so stored, compatibility is that of the assembled round; i.e., WP filler in group H, HE filler in groups D, E, or F, as appropriate.

4. Ammunition designated “practice” by NSN and nomenclature may be stored with the fully loaded ammunition it simulates.

5. Mixing of compatibility groups (except items in groups A, K, and L) is authorized when the total quantity does not exceed 1,000 pounds NEW. Mixed storage that exceeds 1,000 pounds NEW must be approved by NOSSA.

6. Mixing in storage of hazard Class 1 ammunition or ammunition components with hazard Class 2 through 9 ammunition or ammunition components, or with non-regulated items assigned a compatibility group, is authorized, provided storage is in accordance with the compatibility group assigned.

7. Group K requires not only separate storage from other groups, but may also require separate storage within the group. NOSSA shall determine which items in group K may be stored together and those which must be stored separately.

8. Ammunition items without explosives which contain substances properly belonging to another hazard class may be assigned to the same compatibility group as items containing explosives and the same substance, and be stored with them.

9. For purposes of mixing, all items must be packaged in approved storage/shipping containers. Items shall not be opened for purposes of issuing unpackaged munitions at storage locations. Outer containers may be opened in storage locations for purposes of inventorying; for removing munitions still inside an approved inner package in limited amounts, and for magazines storing only hazard division 1.4 items, unpacking, inspecting, and repacking the hazard division 1.4 ammunition.

10. When using the “Z” mixing authorized by note 2, articles of Compatibility Groups B and F each shall be segregated in storage from articles of other compatibility groups by means that prevent the propagation of Group B or F articles to articles of other compatibility groups.

11. When ammunition or ammunition components are assigned to hazard classes 2 through 9, they may be stored in accordance with the compatibility group assigned. The net explosive weight of these items is not to be considered for quantity-distance computations, since the predominant hazard is classes 2 through 9.

12. If dissimilar hazard Class/Division 1.6, group N munitions, such as Mk 82 and Mk 84 GP Bombs, are mixed together and have not been tested to assure non-propagation, the mixed munitions are to be considered hazard Class/Division 1.2, group D for purposes of transportation and storage.

13. Group L items presenting similar hazards may be stored together provided NOSSA authorization is obtained. Mixing with other storage compatibility groups is forbidden.

3-10.3. RELATIONSHIP BETWEEN CLASS, DIVISION, AND COMPATIBILITY GROUP. Table 3-12 shows the number of classification codes. The classification code consists of the three parts of a classification including class, division, and compatibility group. Altogether, there are 35 possible classification codes for explosives.

Table 3-12. Classification Codes

Hazard Division	Combability Group													
	A	B	C	D	E	F	G	H	J	K	L	N	S	A-S
1.1	1.1A	1.1B	1.1C	1.1D	1.1E	1.1F	1.1G	---	1.1J	---	1.1L	---	---	9
1.2	---	1.2B	1.2C	1.2D	1.2E	1.2F	1.2G	1.2H	1.2J	1.2K	1.2L	---	---	10
1.3	---	---	1.3C	---	---	1.3F	1.3G	1.3H	1.3J	1.3K	1.3L	---	---	7
1.4	---	1.4B	1.4C	1.4D	1.4E	1.4F	1.4G	---	---	---	---	---	1.4S	7
1.5	---	---	---	1.5D	---	---	---	---	---	---	---	---	---	1
1.6	---	---	---	---	---	---	---	---	---	---	---	1.6N	---	1
1.1 – 1.6	1	3	4	4	3	4	4	2	3	2	3	1	1	35

3-10.4. CHEMICAL GROUPS. For the purpose of storing and handling, chemical ammunition is divided into groups, based on the action of the chemical filler, the degree and type of hazard and the type of protection required. The same group designations are used for agents and chemical ammunition. The chemical group is based on the chemical filler in the ammunition. For more information on specific chemical ammunition, refer to NAVSEA SW073-AC-MMA-010 and FM 4-02.285.

CHAPTER 4
FIRE PREVENTION, PROTECTION, AND EMERGENCY PLANNING

4-1. FIRE PREVENTION.

Fire prevention programs are vital and must be closely followed to ensure successful explosives safety programs. Fire is a hazard to life and property, especially when ammunition and explosives are involved. Many of these materials are extremely sensitive to heat and react at temperatures substantially lower than those required to ignite ordinary wood, paper, or fabrics. Even indirect heat generated by a fire could initiate a reaction and result in an explosion. Therefore, the first priority and most important rule is to keep ammunition and explosives away from excessive heat. It is the responsibility of all personnel involved with ammunition and explosives to recognize and observe fire prevention practices, and to understand the procedures for fighting and controlling fires that involve explosive materials. The organization responsible for handling and storing explosives must be well trained, efficient, and fully aware of its fire safety responsibility. Refer to OPNAVINST 11320.23 (series) for information about authority and responsibility for fire protection at Navy and Marine Corps shore activities. Fire prevention practices shall comply with the requirements of National Fire Protection Association (NFPA) Standards, as modified by the following and applicable Unified Facility Criteria (UFC) documents.

4-1.1. PERSONNEL INDOCTRINATION. In addition to requirements for personnel safety training described in paragraph 2-3.3, all personnel, supervisory or otherwise, shall be knowledgeable of the fire hazards, firefighting equipment, and safety practices of operations for which they are responsible. Each person shall be knowledgeable of the provisions in fire bills, both general and local, applicable to their operation so that each person knows the appropriate action to take if a fire emergency develops.

4-1.2. FIRE WATCH.

4-1.2.1. Maintenance and Repair Work. A qualified, adequately equipped fire watch shall be posted when maintenance and repair work, involving open flames or heat producing devices is being conducted near or within an area or building where ammunition or explosives are processed, stored, or handled. The fire watch shall be within sight of, but no further than 20 feet from, the work being performed. The fire watch shall stand by and remain on station a minimum of 30 minutes after the operation is complete to ensure no future fire develops. At the end of the 30-minute standby period before departure, the fire watch will check the work site to ensure the site has cooled and no longer presents a hazard.

4-1.2.2. Treatment Operations. Standby firefighting forces are required during certain treatment operations involving the burning or detonation of ammunition and explosives. Requirements governing the burning of ammunition and explosives are described in paragraph 13-2.2.4, and those governing the detonation of ammunition and explosives are described in paragraph 13-2.2.5.

4-1.2.3. Railroad/Truck Holding Yards. The unavoidable large quantities of explosive materials in railroad/truck holding yards and terminals add to the seriousness of the hazard if fire breaks out. Thus, railroad/truck holding yards and terminals at ordnance activities shall be patrolled by security guards on a scheduled basis, as determined by local instruction.

4-1.3. FIRE INSPECTIONS. Fire inspections must be conducted on a scheduled basis, as determined by local instructions. All areas and buildings of an ammunition activity shall be inspected to identify and correct any conditions likely to cause fire. Common causes of fire and/ or violations of fire regulations include, but are not limited to, the following:

a. Excessive amounts of combustible, explosive (approved limits), or other hazardous materials.

b. Improper storage (co-mingling) of combustibles ammunition, explosives, and other hazardous materials.

c. Hazardous conditions arising from defective or improperly-installed equipment and machinery used for processing or handling ammunition and explosives.

d. Excess accumulations of rubbish, waste paper, boxes, shavings, or residues of combustible materials.

e. Accumulations of explosive waste materials or dust on floors, walls, equipment, and machinery.

f. Obstructions of fire exits, fire doors, and firefighting apparatus.

g. Violations of smoking regulations and/or the use or possession of matches, cigarette lighters, electronic cigarettes, vaping devices or other similar flame or spark-producing articles and devices.

h. Missing, improperly posted, or inadequate fire bills and the lack of instructions on the location and employment of fire extinguishing equipment.

i. Use of welding, cutting, or other heat or flame-producing devices or equipment in restricted areas without a permit.

j. Inoperative or poorly maintained fire extinguishers and/or firefighting equipment that does not meet the standards set forth in paragraph 4-1.5.

k. Uncontrolled vegetation growth around operating buildings and magazines. Refer to paragraph 4-1.10 for vegetation control requirements.

4-1.4. PRE-OPERATION PIER AND WHARF FIRE INSPECTIONS AND TESTS. Prior to commencing any explosive operations, the commanding officer of the port facility shall make certain that the following minimum requirements with respect to fire hazards have been met.

4-1.4.1. Vessel Condition. The condition of the vessel shall be satisfactory for safely handling explosives cargo. If unsatisfactory conditions exist, the commanding officer shall require that immediate corrective action be taken or that the vessel be moved away from the pier until the unsatisfactory conditions are corrected. Boiler room and engine room bilges shall be clean and free of oil or unnecessary residue before the vessel proceeds to an explosives or ammunition loading facility or anchorage. The bilges shall be maintained in this condition during the entire time the vessel is moored at the ammunition and explosives loading facility or anchorage.

4-1.4.2. Firefighting Capability. The activity shall ensure that all ships berthed at the pier are capable of fighting shipboard fires. No loading or unloading of ammunition and explosives will take place on a ship berthed cold iron, or a ship berthed cold iron with ammunition onboard, unless the ship's commander can certify that all damage control capabilities are fully operable, standard pressure

is maintained, and emergency generators and fire pumps are capable of immediate and full operation. Fire and security departments of involved shore activities will be notified at least 24 hours in advance of securing the engineering plant of a ship carrying ammunition.

4-1.4.3. Ship Hose Layout. All fire mains shall be inspected onboard a ship prior to commencement of operations to ensure efficient and proper operation. Fire hoses shall be laid out ready for use in the immediate areas of operations, as described in NAVSEA OP 4 Paragraph 2-15.3.

4-1.4.4. Firefighting Equipment Inspections. Inspections of firefighting equipment shall be conducted before commencing operations in accordance with provisions of this paragraph.

4-1.4.5. Safety Loading Officers. Safety loading officers shall inspect the firefighting capability as part of their responsibilities. See paragraph 12-11.1.1.b for additional information concerning safety observers.

4-1.5. FIRE PROTECTION EQUIPMENT INSPECTIONS. All fire extinguishing and firefighting equipment shall be regularly inspected and properly maintained in accordance with approved written procedures. Inspections shall include a monthly check of fire extinguishers and a weekly check, including an operational test, of trailer pumps, stationary fire pumps, fire hoses, fire doors, and similar fire-protection equipment. All valves in sprinkler and water distribution systems should be sealed in proper operating position and checked daily using a checklist that gives specific valve locations. Fire inspectors should complete a prepared checklist identifying the building designation, the fire protection equipment it contains, and the condition of the equipment. Additional details regarding inspection and testing of fire extinguishers, water supply systems, and automatic sprinkler systems are given in paragraphs 4-3.6.4, 4-3.7.4, and 4-3.9.9, respectively. At facilities with automated monitoring capabilities, verification that indication on building supervisory panels meet the requirements for both the valve sealing and daily position verification must be included on the checklist.

4-1.6. SMOKING REGULATIONS. Smoking shall be prohibited in magazines, buildings on piers or wharves, and any other Potential Explosion Site (PES); conveyance where ammunition, explosives, and related hazards are present, or areas restricted by the commanding officer. Exceptions may be authorized by the commanding officer for designated locations, at specified times and under specified conditions in accordance with SECNAVINST 5100.13 (series). Smoking shall not be permitted on ships berthed at piers or anchorages during ammunition and explosives loading or offloading operations or when ammunition or explosives are exposed on deck. The following minimum safety precaution shall be taken in each designated smoking area with the exception of shipboard smoking areas:

4-1.6.1. Flame- and Spark-Producing Devices. Matches, cigarette lighters, electronic cigarettes, vaping devices or other similar flame- or spark-producing devices shall not be permitted in or around PESs. Flame-producing devices used in tests or operations are permissible in operational areas as identified in approved SOPs or permitted in writing by the local explosives safety office and a fire department representative (see appendix F). Only installed electric lighters shall be allowed in designated smoking areas and these must be of a type that can be lighted only by a positive action using a momentary switch or button. Lighters shall be shielded to prevent personnel injury.

4-1.6.2. Smoking Areas. Smoking areas should be located outside the fenced boundary of restricted areas and as far possible from any PES. Signs with "Designated Smoking Areas" shall be prominently posted at approved smoking areas. Necessary approved firefighting equipment shall be available. A 2½-gallon stored pressure water or equivalent type extinguisher shall be furnished in each approved smoking area. Exterior windows and doors of buildings designated as smoking areas shall be equipped with standard window and door screens that shall be kept in good repair. Screens are not

required on exterior windows that cannot be opened or on doors with automatic closure devices. The door between an approved smoking room and the explosive area of an operating building must be Class B fire rated and equipped with a shatterproof window, adequate in size to observe personnel within the smoking room, and an automatic closure device. This door shall not be left open.

4-1.6.3. Additional Requirements for Smoking Areas. Suitable metal receptacles, preferably containing water or sand, shall be provided for cigarette butts. Combustible receptacles shall not be used as sand pails. Sand pails shall be emptied at least weekly or preferably at the end of the workday. No cigarette or tobacco disposal shall be permitted in rubbish cans, wastebaskets, or any place where there is a risk of igniting combustible material. Combustible material in smoking areas shall be minimized. Personnel wearing clothing contaminated with metal powder, explosives, or dust that is explosive or highly flammable shall not smoke or enter an approved smoking area until such contaminated clothing has been removed.

4-1.7. HOUSEKEEPING. An essential element of any fire prevention effort is good housekeeping. Accumulations of combustible scrap, flammable residue, and explosive dust are primary sources of fires. Working surfaces, processing lines, storage and repair areas, supply and support activities, and transfer and shipping areas shall be kept clean and orderly to minimize fire hazards. Operating areas and spaces between buildings shall be kept clear of any combustible material. Rubbish and trash such as empty boxes, scrap lumber, nails, and strapping materials shall not be permitted to accumulate in these areas. Requirements for dunnage lumber yards and open storage of combustibles are presented in paragraphs 4-1.26 and 4-1.27, respectively. Additional housekeeping requirements in hazardous areas are given in paragraph 2-1.5.

4-1.7.1. Stacking of Combustibles. Combustible material shall be stacked in an orderly manner that prevents toppling or collapsing of the stacks and arranged so that the material is readily accessible for retrieval, inspection, and firefighting. Stacks will not obstruct exits, passageways or be located near steps or stairwells, and shall comply with NFPA 101 egress requirements. The arrangement of stacks shall not obstruct sprinklers, nozzles and other fire protection devices (NFPA 1). The clearance between the sprinkler deflector and the top of the material in storage shall be 18 inches or greater. The stacks should not be an obstruction or obstacle in areas where the free circulation of air is necessary. Combustible materials stored in crushable containers shall be stacked so that the weight of a container is adequately supported by the container below it. The container should be tiered on suitable racks, shelves, or other vertically supported devices if necessary. Combustible materials shall be segregated to ensure compatibility.

4-1.7.2. Combustible and Explosive Scrap. Except for approved uses, combustible materials such as paper, oily rags, cotton waste, oakum, paints, solvents, volatile liquids, and painting cloths shall not be permitted in or near a PES. When required, these items shall be stored in authorized fireproof lockers or containers specifically designated and used for that purpose. Particular care shall be taken to avoid the presence of steel wool, glass wool, sand, gravel, or any other abrasive substances and debris on or near floors, tables, loading docks, landing platforms, or other working surfaces where explosives are handled. Waste materials like oily rags, combustible and explosives scrap, and paper shall be separated and placed in approved containers that are properly marked and preferably located outside the building or isolated from the immediate vicinity of the explosives operation. The waste containers shall be painted different colors and the name of the contents plainly marked on the exterior surface. All combustible and explosive scrap and waste shall be removed at least daily from operating buildings or areas and taken to isolated collection and/or disposal sites in accordance with the Standard Operating Procedure (SOP). Hazardous waste must be removed to a less than 90 day accumulation site or to a permitted storage facility. For Research, Development, Test and Evaluation (RDT&E) operations, explosive waste is generated when a determination is made by the generator to discard

scrap material, without intent to reuse, recycle, recover or sell it. See appendix F, paragraphs F-10.3 through F-10.3.3 for requirements involving waste resulting from RDT&E operations. Scrap shall not be left or stored in buildings or areas that are not occupied, but shall be removed to a treatment area before any building or area is vacated.

4-1.7.3. Drips and Spills. Dripping or spillage of oil from machinery and equipment shall be prevented, or if unavoidable, a suitable means shall be provided to collect the oil. Oil spills shall be cleaned up promptly.

4-1.7.4. Accumulations of Explosives, Explosive Dust, or Other Hazardous Material. Explosive dust or other hazardous materials shall not be allowed to accumulate on structural members or other surfaces, including radiators, heating coils, ventilating ducts, steam and hot water pipes, or electrical fixtures. Spilled explosives shall be removed promptly. Cracks or crevices where explosives or explosive dust may accumulate shall be eliminated. Window ledges should be sloped, when practical, to reduce the accumulation of explosive dust. Unpacked ammunition, loose powder, explosives not in process, and combustible materials shall not be permitted to accumulate, and shall be kept in designated receptacles. Posted explosive limits shall not be exceeded.

4-1.7.5. Considerations at the End of a Workday. The supervisor shall carefully inspect the room, building, or area for which he/she is responsible to determine if all safety regulations and requirements with regard to operation shutdown have been observed. All unsafe or potentially hazardous conditions shall be corrected before the room, building, or area is secured and vacated. In those cases where hazardous conditions cannot be corrected, unsafe conditions shall be reported via the chain of command. The removal of all ammunition and explosives from operating buildings at the close of a workday is not required providing the requirements of paragraph 11-6.3 are observed. The requirements for removal of combustible and explosive scrap described in paragraph 4-1.7.2 also shall be observed.

NOTE

For RDT&E operations, authorization for variation from these requirements can be obtained from Naval Ordnance Safety and Security Activity (NOSSA) when the facility or operating procedures mitigate potential hazards or when overnight storage is demonstrated as being essential to mission accomplishment.

4-1.8. FLOOR CLEANING AND PROTECTING MATERIALS. SOPs shall include the cleaning and protecting process, required materials, and final disposition of these materials. All water, steam condensate, and sweeping compounds which are contaminated with explosives must be collected and tested for classification as hazardous waste under Environmental Protection Agency (EPA) guidelines.

4-1.8.1. Sweeping Compounds. Hot water or steam should be used instead of sweeping compounds whenever possible for cleaning floors in buildings that contain explosives. Sweeping compounds that are nonabrasive and that are compatible with the explosives involved may be used when the use of steam or hot water is not practical. These compounds should be noncombustible. If combustible, they must not have a flash point less than 230 degrees Fahrenheit (°F) (closed cup). Sweeping compounds containing wax shall not be used on conductive flooring. The use or storage of cleaning agents containing caustic alkalis is prohibited in buildings that may contain or that previously contained nitrated organic explosives, because sensitive explosive compounds may result.

4-1.8.2. Cleaning Solvents. Cleaning solvents with a flash point of 100°F or less (closed cup) are flammable liquids and shall not be used as general floor cleaning product. Flammable cleaning solvents should only be used as a spot remover.

4-1.8.3. Floor Oils. Protective floor oils and oils mixed with other substances to form cleaning compounds may be used with manual or mechanical scrubbing and polishing machines if they have a flash point above 257°F (closed cup). Such cleaning compounds shall be free of any tendency to heat spontaneously during application and polishing operations and be approved by the Underwriters' Laboratories (UL).

4-1.8.4. Anti-slip Materials. Anti-slip and absorbent materials, available on the open market under various trade names, shall not be used unless they are certified as noncombustible by an approved testing organization. The anti-slip material must retain conductive ability if used on a conductive floor.

4-1.8.5. Cleaning. A mixture of hot water and steam [not exceeding 25 pounds per square inch (psi)] should be used to clean surfaces exposed to explosives including spilled molten explosives. This cleaning mixture should be used in buildings, on equipment, and on the exterior of closed containers. All water which is contaminated with explosives must be collected and tested for classification as hazardous waste under EPA guidelines.

4-1.9. TRASH BURNING. Burning of trash or rubbish shall not be allowed in magazine or other explosives handling, operating, or storage areas.

4-1.10. FIREBREAKS. Vegetation, trees, grass, leaves, undergrowth, and weeds can become a serious fire hazard to structures and facilities. Vegetation may be ignited by sparks from locomotives or the exhaust of motor vehicles; by personnel who are smoking; by careless and unauthorized use of matches, cigarette lighters, and similar flame-producing devices; by lightning; and by the sun reflecting on broken glass. Therefore, vegetation within 50 feet of any PES shall be maintained at a height of no more than 18 inches to create a firebreak, except where topography or other physical characteristics make this impossible. A 25-foot firebreak shall be maintained along both sides of on-station rail tracks carrying ammunition and explosives. Vegetation should be controlled by chemical weed killer, cutting, plowing, or controlled burning, as necessary or appropriate. Firebreak requirements for open storage areas are provided in paragraph 4-1.27 and open burn/open detonation sites in paragraphs 13-2 and 13-3. Further requirements for control of vegetation are described in the following paragraphs.

4-1.10.1. Trees. All trees shall be removed from firebreaks. Trees outside firebreaks need only be removed if they present an immediate hazard to the PES, such as a dead or damaged tree. Trees along side revetments or ground barriers need not be removed unless there is danger of the tree falling over the barrier and affecting operations inside the enclosed area. All trees within lightning protection zones of protection (mast and catenary) must be removed.

4-1.10.2. Chemical Weed Killing Agents. Chemical weed killing agents that contain large amounts of strong oxidizing compounds like chlorates that will increase the combustibility of other vegetation and could ignite spontaneously under hot, dry conditions, should not be used.

4-1.10.3. Cutting. Wheeled gasoline-powered grass cutters may be used on top of earth covered magazines, but should be kept at least 5 feet from ventilators and head walls to prevent damage to the lightning protection system. The remaining 5 feet around the ventilator should be cut by hand-held powered equipment. The operating requirements for motor vehicles in explosive areas, described in paragraph 12-7.3, should be used as a guide to the operation of gasoline-powered grass cutters.

However, it is not necessary to put spark arrestors on gasoline-powered grass cutting equipment. Refueling of grass cutting equipment is described in paragraph 4-1.24.5.

4-1.10.4. Plowing. Plowing or blading of the earth cover to control vegetation is not recommended unless exceptional fire hazards exist.

4-1.10.5. Burning. During calm weather, when adequate precautions are taken to prevent the spread of fire, supervised burning may be employed to control vegetation. The fire department, and when appropriate, a natural resources representative shall supervise burning within 200 feet of any aboveground magazine, explosives operating facility, or outdoor storage pad that contains ammunition or explosives, or within 50 feet of any earth-covered magazine that contains ammunition or explosives. During burning operations, all windows, doors, and ventilators of nearby magazines shall be closed. All railcars and vehicles that contain hazardous materials shall be removed from the area.

4-1.10.6. Magazines. The earth cover adjacent to and extending over magazines shall be free of debris and brush, including accumulated grass clippings, that could create a fire hazard. Vegetation around magazine ventilators is of particular concern since the ventilator provides a path for fire to enter the magazine.

4-1.10.7. Rubbish. Rubbish shall not be permitted to accumulate within the firebreak of any PES.

4-1.10.8. Livestock Grazing. Livestock may be utilized for the control of vegetation as approved by NOSSA/MARCORSYSCOM. The use of livestock for the management of firebreaks must include compensatory measures to prevent concurrent explosive operations.

4-1.11. OPEN BURN/OPEN DETONATION TREATMENT OPERATIONS. Open burn/open detonation (OB/OD) operations present fire hazards that require rigid controls. The requirements for fire prevention and protection during explosives treatment operations, as well as regulations as to the location, condition, and preparation of the OB/OD area and the conduct of the actual treatment operations shall be strictly enforced. Standby firefighting forces shall be present during OB/OD treatment operations. See paragraphs 13-2 and 13-3 for additional requirements on OB/OD treatment operations.

4-1.12. BOILERS AND HEATING EQUIPMENT. Siting and installation requirements for boilers and heating equipment are given in paragraphs 7-13.16 and 8-4.2.6.4, respectively. No heat-producing devices using coal, gas, or liquid fuel shall be allowed on explosives loading piers, except as permitted by this manual. Electric heaters may be used on a pier if a 12-inch clearance from combustible material is maintained. Steam or hot water may be used on the pier if the boiler is placed on land, away from the pier. When impractical to conform to the requirements described in this paragraph, buildings located on piers with reinforced concrete decks may be heated by steam or hot water from a boiler located on the pier. However, only gas, liquid fuel, or electrical heating may be used and the boiler shall be placed in an enclosure with walls, floor, and ceiling constructed to provide at least 1-hour of fire resistance. When the fire-resistive floors of the boiler room have a wooden subdeck or subfloor, or wooden members of a substructure are within 3 feet of the boiler, ample means of ventilation shall be installed so that ventilation exists between the deck or floor and the bottom of the boiler firebox. Minimum protection for all openings into the boiler room shall consist of approved automatic or self closing UL class “C” fire doors or their equivalent. If the supply tanks for liquid fuels are located inside the boiler room, sills at least 4 inches high shall be provided at all floor-level openings. A drain, properly trapped to prevent the passage of flame, shall be installed from the fuel tank to an adequately sized drain tank. All floor drains in the boiler room shall be properly trapped to prevent the passage of flame and shall be connected to an adequately sized drain tank. Liquid fuel tanks, located outside of

buildings, shall be provided with protective bumper guards. Natural gas lines installed on ammunition terminal piers must be equipped with pressure sensors to automatically shut off the flow of gas to a ruptured line. Heating and/or cooling equipment shall be designed to avoid rapid temperature changes inside the bays or spaces protected with rate-of-rise detectors for fire protection systems activation.

NOTE

Mobile Utility Support Equipment (MUSE) units or trailers conform to the intent of this manual when they are sited on piers and wharves. Primary fuel tanks that supply these units shall be located on shore. Vessels being serviced by the units shall be in a “cold iron” status with all cargo hatches secured. There shall be no ammunition handling on the pier when a MUSE unit is in service. It is not necessary to move MUSE units from piers when they are not in service.

4-1.13. POWERED INDUSTRIAL MATERIALS HANDLING EQUIPMENT. Refer to NAVSEA SW023-AH-WHM-010 for the selection and use of industrial materials handling equipment (MHE) during handling evolutions involving ammunition, explosives and hazardous materials.

4-1.14. ILLUMINATING DEVICES. Lights used to illuminate explosives areas shall meet the requirements of paragraphs 8-2.3.1, 8-4.2.1, and 8-6.3 for magazines, operating buildings, and piers and wharves, respectively. In addition, safety requirements for extension lighting are provided in paragraph 5-10.4.2. Illuminating devices must be listed by UL or other recognized testing agency for use in the specified hazardous area, as defined in the National Electrical Code (NEC).

4-1.15. HEAT- OR SPARK-PRODUCING EQUIPMENT. Work requiring soldering, melting of asphalt, or use of blow torches or other heat or spark-producing devices that develop temperatures sufficient to cause thermal ignition of potential explosive material or contamination at the work site, i.e., higher than 288°F, shall not be performed in and around a PES without proper and continuous supervision to ensure all necessary precautions and regulations are strictly observed. The commanding officer or designated explosives safety officer (ESO) may grant written approval for hot work on magazines such as welding security brackets/hasps/hinges without removal of the magazine’s contents when the following conditions are met. When these conditions cannot be met, approval for operating heat or spark-producing equipment must be requested from NOSSA:

a. The fire prevention officer or station fire chief and ESO shall be notified before cutting and welding operations are begun so that an inspection of the equipment to be used and the structural unit or area involved in the operation may be conducted. The permit shall be countersigned by a representative of the station’s fire department after an agreement on the safety requirements is reached by the person responsible for doing the work, the foreman of the PES where work is performed, and the person authorized to sign the permit. The following information shall be identified on the report.

(1) Location of heat-producing equipment.

(2) Purpose of heat-producing equipment and the time and duration of use.

(3) Details of safety measures required.

(4) Firefighting equipment that must be available.

(5) Names of workers using the heat-producing equipment or the name of their immediate supervisor.

b. No work shall be performed in any other area unless another permit is issued. A copy of the signed permit should be in the possession of the person performing and/or supervising the work.

c. A fire watch shall be maintained at all times while each welding or cutting operation is in progress and in accordance with paragraph 4-1.2.1. If the work involves a partition, a bulkhead, or a deck with its opposite side obscured from the view of the person performing the work and the fire watch on duty, a fire watch shall be maintained on the obscured side as well. Each fire watch shall have suitable fire extinguishing equipment immediately available for extinguishing incipient fires of the type expected at that location.

d. No repairs shall be made to a magazine containing bulk explosives or bulk propellants, prior to removal of such materials from the magazine, followed by a thorough cleaning of the magazine, to include washing down of the magazine interior with water.

e. The floor in the immediate vicinity of the repair work shall be swept and any explosive stains removed before work is begun.

f. No electric or open flame welding or cutting shall be permitted on any fuel tank, fuel line, or bulkhead behind which bulk oil or other flammable products are stored or have been stored. Similarly, these operations shall not be permitted in any other area where flammable vapors may accumulate until these areas have been made gas-free, or continuous purging is arranged, and a “safe-for-fire” certificate has been issued by a gas-free engineer.

g. Combustible material in the area where open-flame operations are being performed shall be suitably shielded.

4-1.16. WELDING AND CUTTING OPERATIONS ON SHIPS. Rules concerning welding or cutting operations that involve the use of an open flame or arc on berthed ships, referred to as hot work, are addressed in the following paragraphs. Specific criteria concerning performance of hot work on explosive-loaded ships are addressed in paragraph 2-5.1.6.g and NAVSEA OP 4.

4-1.16.1. Ammunition Terminals.

a. Hot work shall not be undertaken on merchant ships or naval vessels located at an ammunition terminal or in an approved explosives anchorage if ammunition handling is being conducted at the pier or anchorage, or if ammunition is staged on the same pier.

b. If no ammunition operations are underway and no ammunition is staged on the same pier or wharf, hot work may be performed in accordance with NAVSEA OP 4 and paragraph 2-5.1.6.g of this manual.

c. In case of an emergency affecting the security of the ship such as welding pad eyes, angle bars or other cargo security devices, or when performing scheduled routine maintenance, welding or cutting may be permitted if the area is not directly above stowed explosives. Permission to conduct these operations on merchant vessels shall be obtained from the installation commander. Under these conditions, cargo-loading hatches and/or magazine doors shall be closed and no ammunition handling activities shall be permitted aboard the ship.

4-1.16.2. General Ship Berthing Facilities.

a. No hot work shall be performed at or alongside an authorized ammunition handling location during any logistics or maintenance movement of ammunition, unless such hot work is in a confined tender shop, as addressed in paragraph 2-5.2.10.e.

b. Exposed hot work (that outside the skin of a ship) may be performed at other berths of the same pier or slip, provided there is 100 feet separation between the hot work and any external ammunition movement, or any exposed ammunition, provided there is a physical barrier (i.e., work horses, cones, tape) in place, defining the separation between these areas.

c. Hot work inside the skin of a ship (not exposed) may be performed at any berth other than the berth at which ammunition is being handled.

d. In cases where ships or submarines are nested alongside a tender, internal hot work may be conducted on vessels on one side of the nest simultaneously with ammunition handling on the other side of the nest. Aside from this exception, all other hot work restrictions apply.

e. All hot work at a naval station or other naval activity pier shall be scheduled with and cleared by the organization designated by the activity's commanding officer for the coordination and/or supervision of waterfront hazardous operations.

4-1.17. OPEN FLAMES. Rules concerning open flame operation on a dock, lighter, ship or any vessel involved in the loading, handling or discharge of ammunition and explosives are addressed in the following paragraphs:

4-1.17.1. No fire shall be permitted on a ship or vessel regardless of where such operations are being conducted. Included also are non-self-propelled floating cranes (YDs) if required for handling. Every fire considered necessary, including oil-fired cook stoves or heaters, shall be properly safeguarded and shall be under the constant observation of a competent person who has been assigned that duty by the commanding officer of the ship or the person in charge of the dock, lighter or YD.

4-1.17.2. Any vessel engaged in the handling and transfer of ammunition and explosives that has smoke pipes or stacks used with heating, cooking, or lighting equipment shall have its smoke pipes and/or stacks protected by spark screens.

4-1.17.3. For additional details consult 46 CFR 176.164 and NAVSEA OP 4 for ammunition afloat.

4-1.18. ELECTRICAL EQUIPMENT AND MACHINERY. Areas where explosives operations produce flammable vapor or explosive dust have high fire and explosion potential. Vapors and dusts produced can be readily ignited by sparks or heat from electrical equipment and machinery that is improperly installed, used, and/or maintained. Therefore, all electrical equipment and machinery and its installation shall, at a minimum, comply with the requirements of the NEC, NFPA 70 for the area where it is installed. Refer to chapter 5 of this manual for additional requirements.

4-1.19. ELECTRICAL SERVICE AND WIRING. The installation and use of improper or defective electrical service and wiring in and around PESs present serious fire and explosion hazards that require rigid control. Electrical circuits, outlets, lights, equipment, and devices that are defective, inadequate, or unauthorized may spark, locally heat, or arc between terminals and ignite adjacent structures, exposed explosives, or hazardous materials. Defective electrical insulation may short-circuit or ground,

causing sparks or extreme local heating. Therefore, all electrical service and wiring shall comply with the requirements in the appropriate paragraphs of chapter 5 of this manual.

4-1.20. SPRAY PAINTING AND FINISHING. The spraying of paints, varnishes, lacquers, and other flammable liquids is a fire hazard. The spraying not only produces a flammable residue, but also flammable vapors, mists, and deposits that are subject to spontaneous ignition. Paint spraying operations shall be conducted in accordance with the requirements in paragraph 9-3.7. When electrically-powered paint spraying equipment is used, the installation shall comply with the NEC, NFPA 70, and the requirements of NFPA 33, as applicable. Spray painting areas inside buildings shall be sprinkled with fire protection systems of the wet kind.

4-1.21. DEFECTIVE MACHINERY, EQUIPMENT, AND TOOLS. Any of these items may become a source of fire if they overheat or if the electrical circuits or motors short out. Care should be exercised to ensure that working parts move freely and that tools and machinery with electric motors are not over-lubricated.

4-1.22. DEFECTIVE TRANSMISSION LINES. Power transmission lines that are inadequately supported or blown down by storms may contact combustible materials and be a source of ignition. Siting parameters are provided in paragraph 5-10.1.

4-1.23. MOTOR VEHICLES. Motor vehicles and equipment that employ internal combustion engines in the vicinity of explosives to transport ammunition, explosives, and other hazardous materials shall be equipped with effective spark- and flame-arresting devices located in the exhaust lines. Equipment specifications and operating requirements for motor vehicles engaged in transporting ammunition and explosives are given in paragraphs 12-7.3 and 12-7.5.

4-1.24. REFUELING. Requirements for refueling are as follows.

4-1.24.1. Motor vehicles transporting ammunition or explosives shall not be refueled in and around a PES.

4-1.24.2. Explosives-handling equipment should be fueled prior to being put into service to minimize refueling requirements. This equipment shall not be refueled inside buildings. If the fuel supply is exhausted while the equipment is inside a building, the equipment shall be towed outside to a safe location at least 100 feet from the nearest PES and at least 20 feet from warehouses and other inert storage buildings prior to refueling. The doors and windows of buildings through which vapors may enter during refueling shall be closed. The smallest size refueling unit available should be used, preferably a unit of 500-gallon capacity or less. During refueling operations, an electrically continuous path shall be maintained between the tank being filled and the tank being emptied. The entire system shall be electrically grounded. All equipment and refueling unit motors shall be shut off during refueling operations, except when the refueling unit motor drives the pump. Equipment motors shall be run for a sufficient time after refueling and recapping the tanks to ensure that fire which might result from fuel vapors occurs before equipment is returned to the operational area.

NOTE

Do not use or keep CO_2 fire extinguishers at refueling locations. High velocity streams of CO_2, when injected into the concentrated vapors of hydrocarbon fuels such as JP, gasoline, or diesel can generate static electricity despite a grounded fuel hose, and may ignite the fuel vapor causing an explosion.

4-1.24.3. In the event of a fuel spill during refueling operations, notify the spill response team. Equipment shall be moved at least 50 feet from where the spill occurred. Motors on the equipment or refueling unit shall not be started until the fuel tank is capped and the area is thoroughly cleaned.

4-1.24.4. Simultaneous bulk fuel loading and ammunition handling shall not be conducted pierside or at anchorage. When refueling is conducted pierside or at anchorage, ammunition handling shall be secured by all ships located at the pier or in the anchorage. Internal bulk fuel transfers shall not be conducted while handling ammunition on the same ship. Explosive-laden vessels may be fueled pierside or at anchorage, provided that ammunition is not being loaded, handled, or discharged, and that all explosives are properly stowed and secured.

4-1.24.5. Fueling of miscellaneous gasoline-powered utility equipment like chain saws, grass cutters, mowers, trimmers, or pumps, shall be accomplished at least 100 feet from explosives areas and at least 20 feet from warehouses and other inert storage buildings. Requirements regarding refueling of portable engine-driven electrical generators are as follows:

a. Suitable extinguishers shall be ready for use during all refueling operations.

b. The generating unit shall be turned off and all motors in the area, except for the refueling pump, shall be stopped.

c. Smoking or open-flame devices shall not be permitted within 50 feet of the refueling operations.

d. The tank being filled shall be electrically bonded to the supply tank by means of an approved bonding strap. In addition, either the supply tank or tank being filled shall be grounded with a suitable ground strap from the tank to a metallic ground rod that is driven into the ground.

e. The generating unit and the gasoline supply containers shall be located so that spilled gasoline will flow by gravity away from the explosives facility. Provide secondary containment to prevent any spilled fuel from reaching an explosive facility.

f. In the event of a fuel spill, no motor shall be started until the fuel spill is cleaned up in accordance with the Activity Oil and Hazardous Materials Spill Response Instruction. Washing fuel spills with water is an EPA violation. See OPNAVINST 5090.1 (series) instruction for guidance.

g. Two persons shall be present during the entire operation.

4-1.24.6. Aircraft fueling and defueling when loading or downloading weapons is discussed in appropriate NATOPS manuals.

4-1.25. LOCOMOTIVE AND SELF-PROPELLED RAIL VEHICLES. Only diesel locomotives shall be used in and around PESs. The exhaust systems of diesel locomotives and other diesel- or gasoline-powered, self-propelled rail vehicles shall be provided with effective spark arrestors. Refer to paragraphs 12-8.1 and 12-8.3 for additional railroad equipment specifications and operating requirements.

4-1.26. DUNNAGE. The use of wooden or other combustible dunnage should be held to a minimum and should be discontinued and replaced by metal dunnage when feasible. When wooden or other combustible dunnage is used, dunnage storage, preparation, salvage, and disposal yards shall be sufficiently isolated so that they do not constitute a fire hazard to the PES and other facilities or to surrounding lumber storage. Adequate fire hydrants and firefighting equipment shall be provided at

dunnage operations. Dunnage shall be delivered where needed, in quantities and at the times ordered by the cognizant supervisor. Surplus dunnage shall be removed periodically to the salvage yard to prevent hazardous accumulations in operational areas.

4-1.26.1. Dunnage lumber yards that contain over 500,000 board feet of lumber should be located a minimum of 1,000 feet from piers and wharves, railroad tracks, or rail or truck holding yards where explosives-laden railcars or trucks may be placed or stored. Lumber yards containing 500,000 or less board feet of lumber should be located a minimum of 500 feet from these facilities. Siting of dunnage yards respective of explosives safety criteria is addressed in paragraph 7-13.5.

4-1.26.2. Dunnage preparation buildings, like small box shops, that are located within the lumberyard should be at least 100 feet from the nearest lumber piles.

4-1.27. OPEN STORGE OF COMBUSTIBLES. Open storage areas for wood crated material or combustibles other than loose lumber should be located at least 500 feet from piers and wharves, or locations where explosives-laden railcars or trucks may be stored or placed. A minimum 250-foot firebreak should be provided between these open storage areas and all wooded, forest, or brush areas, and a 200-foot clear space should separate any lumber storage area. When open storage areas are provided with fire reporting systems, fire alarm boxes or telephones shall be installed no more than 600 feet apart. The same fundamental requirements of neat piles with adequate aisles and firebreak spacing between stacks should be followed as for dunnage lumber yards. All storage sites should be kept free of any unnecessary accumulation of materials.

4-1.28. FIRES CAUSED BY AMMUNITION, EXPLOSIVES, AND HAZARDOUS MATERIALS. In addition to the general fire hazards covered by the fire prevention regulations cited in the preceding paragraphs, there are several other principal sources of fire in explosives areas and operations. The following sources of fire shall also be avoided.

4-1.28.1. Deteriorated Ammunition and Explosives. Some explosives and ammunition deteriorate in storage. The deterioration normally occurs at such a slow rate that most explosives and ammunition remain serviceable for many years. However, under unfavorable storage conditions when the ammunition is subjected to abnormally high temperatures or exposed to moisture for a prolonged period, the rate of deterioration is accelerated. Most explosives and ammunition give off heat as they deteriorate, but where the rate of deterioration is slow, the heat generated is dissipated by conduction or radiation and no noticeable rise in temperature occurs. If the deterioration rate increases, heat may be generated so quickly that it cannot be dissipated and the temperature rises. This accelerates the deterioration rate until the temperature may become high enough to cause the explosives or ammunition to burst into flame. In instances when the explosives are confined, an explosion or detonation may result. This cause of fire can be nearly eliminated through an effective ammunition and explosives surveillance program.

4-1.28.2. Chemical Incompatibility and Instability. Certain chemicals, chemical substances, and pyrotechnic mixtures may react to form new substances when they are exposed to air, become wet, or come into direct contact with each other. The reaction may result in such a rapid rise in temperature that the ignition point of an item is reached and combustion follows.

4-1.28.3. Spontaneous Combustion. Confined and inadequately ventilated piles of paper, cloth, cotton waste, and excelsior may spontaneously burst into flame when they are contaminated with oil, paint, grease, and certain other substances. All contaminated, combustible material shall be placed in a container with a self-closing lid until it is disposed of. Good housekeeping practice will reduce the hazard of spontaneous combustion.

4-1.28.4. Flammable and Combustible Liquids. Fires may be caused when flammable and/or combustible liquids come into contact with hot surfaces. Flammable and combustible liquids, vapors from thinners or cleaning and degreasing solvents have flash points below the highest temperatures encountered in normal operations. Hazard from vapors can be reduced by providing adequate ventilation, keeping containers sealed, minimizing flammable liquids, and restricting storage to flammable storage lockers.

4-1.28.5. Static Electricity and Frictional Sparks. In magazines or buildings where exposed explosives like black powder or flammable vapor mixtures, or solvent fumes from smokeless powder are present, a spark may initiate a fire or cause an explosion. Sparks may be produced by the uncontrolled discharge of accumulated static electricity, induced voltage caused by nearby lightning strikes or high-powered radio or other electromagnetic radiation, the frictional impact of metal, like the nails in a shoe on a concrete floor, or rough handling of containers or unauthorized dragging or rolling of metallic containers.

4-2. EMERGENCY PLANNING.

Activities will develop SOPs or plans designed to provide explosives safety, security, and environmental protection. These plans will be coordinated within the installation, and with other Federal, state, and local emergency response authorities such as law enforcement, fire departments, or hospitals and established Local Emergency Planning Committees (LEPC). At a minimum, these SOPs or plans shall include:

a. Specific sections and guidance that address emergency preparedness, contingency planning and security. These SOPs or plans will include provisions that limit access to trained and authorized personnel.

b. Procedures that minimize the possibility of a nonpermitted or uncontrolled detonation, release, discharge, or migration of ammunition or explosives from any PES when such release, discharge, or migration may endanger human health or the environment.

c. Provision for prompt notification of emergency response organizations and environment agencies and the potentially affected public in the event of an actual or potential detonation or uncontrolled release, discharge or mitigation. Additional information on evacuation plans and withdrawal distances is provided in paragraph 4-5.1.

d. Provisions for complying with the Emergency Planning Community Right-To-Know Act (EPCRA), Section 302-312.

4-3. FIRE PROTECTION.

The following fire protection regulations shall be observed during operations that involve ammunition and explosives. General fire protection regulations pertain to the understanding and use of fire bills, fire maps, fire alarm and detection systems, fire suppression systems, fire drills, fire department regulations, and firebreaks.

4-3.1. FIRE BILLS. Officers and supervisors shall require all personnel under their jurisdiction to be familiar with the provisions of fire bills.

4-3.1.1. Fire Bill. Each activity shall prepare a fire bill that shall be posted conspicuously throughout the station. Tenant commands shall be responsible for preparing and implementing fire bills applicable

to their operations. See sample fire bill in figure 4-1. The fire bill shall be reviewed every six months and revised as necessary. While the needs of individual stations vary, every fire bill shall, as a minimum, provide the information or the instructions for:

a. Reporting a fire.

b. Evacuating personnel to a distance, or designated area or shelter, that provides adequate protection. Minimum evacuation distances are discussed in paragraph 4-5.1. Interim gathering points may be established to allow accountability of personnel.

c. Activating, if applicable, the nearest deluge or other fire protection devices that require manual activation to extinguish or control fire. For example "System Manual Activation pull box is located (enter location)."

d. Having supervisors or other responsible persons meet the arriving firefighters to advise them of the type of fire, its location, and what materials are involved or likely to be involved. The meeting points should be as far from the fire as possible and along the path of the firefighters' approach.

e. Operating fire doors and other means of confining or localizing fire.

f. Securing valuable Government assets.

g. Removing, when feasible, explosives or hazardous materials from the path of the fire.

h. Activating the auxiliary brigade if appropriate, in accordance with paragraph 4-3.5.3.

i. Identify, by name, responsible individuals and their specific emergency duties.

j. Locating and conducting user-level inspection requirements of fire extinguishing equipment.

k. Describe local or station unique consideration that may impact the severity of a fire or impede the evacuation or operation of fire extinguishers, deluge sprinkler systems, or other fire protection devices that require manual activation to extinguish or control fire.

l. Identify the names and non-emergency telephone number of local fire and emergency service department points of contact.

4-3.2. FIRE MAP. A map of the entire establishment and any potentially hazardous external locations near the installation shall be posted in a conspicuous place at fire stations and other locations approved by the commanding officer, including regional emergency dispatch offices. These maps must show buildings; magazines; outside storage areas such as truck or railcar holding areas, container pads, and loaded barges; gasoline and fuel oil tanks, and storage locations of hazardous materials and flammable volatile liquids. The map should show the location of the water distribution system, including valves and hydrants, and the size of mains. The contents of hazardous locations should be indicated on the map by colored pins or suitable indicators specifically showing the explosive site by Hazard Class/Division (HC/D). This information shall be kept up-to-date on a posted fire map or by an electronic database/ spreadsheet from information supplied by the ordnance department after checking storage records at regular intervals or as conditions change. The fire map or electronic database must

be current to enable the fire department to immediately determine the type of fire it will have to fight and the types of protective equipment required.

4-3.3. FIRE ALARM AND DETECTION SYSTEMS. Fire alarm and detection systems shall be designed and installed to meet the requirements of the latest version of UFC 3-600-01 (series). Specific requirements or recommendations regarding alarm or detection systems, the mandatory provisions of National Fire Protection Association (NFPA) standards shall be followed. Additional guidance relating to naval activities follows.

4-3.3.1. When the fire department of a nearby city or town has agreed, in writing, to respond to fires at the installation, the installation's fire alarm/reporting system should be directly connected with the primary dispatch center, eliminating loss of time in relaying signals from one system to the other.

FIRE BILL PROCEDURES

INSTALLATION:
BUILDING # **(enter building number)** **ROOM #** **(enter room number)**

Reporting a Fire: USE NEAREST FIRE ALARM PULL BOX OR DIAL 9-1-1. Know the location of the nearest alarm box and the nearest telephone in your area. The nearest phone and fire alarm pull box are located (enter location). **When using the telephone, remember to REPORT THE INSTALLATION AND BUILDING NUMBER.**

Evacuation: Spread the word to all personnel and evacuate to the distances provided below based on the Hazard Class Division. All personnel except fire parties will clear the area. Muster all personnel.

Emergency withdrawal distances for nonessential personnel from fires **INVOLVING** explosives:

FIRE SYMBOLS	HAZARD CLASS/ DIVISION	ALL QUANTITIES
1	1.1	4000 FTS
2	1.2	2500 FTS
3	1.3	600 FTS
4	1.4	300 FTS

Muster Location: All personnel will muster at (enter location/s)

Activation: Without endangering your life or others and when safe to do so, use fire extinguisher to extinguish small fires that have not reached explosives. Manually activate deluge sprinkler system (as necessary).

The nearest fire extinguisher is located (enter location).

If applicable. The nearest deluge System Manual Activation pull box is located (enter location).

Actions: Only if time permits and there is no immediate danger to self or others:

- Secure valuable government assets
- Remove hazardous materials from the fires path
- Close doors and windows to confine the fire
- Active auxiliary brigade (if appropriate)

Command Post: Upon arrival of the Fire Department, supervisor(s) or senior person shall provide the Incident Commander with the following information:

- Location of Fire
- Hazardous Materials in vicinity or involved
- Personnel evacuation muster status

Equipment: It is the responsibility of the commands Fire Warden to ensure all fire equipment is inspected at required intervals and replaced as needed.

IT IS THE RESPONSIBILITY OF ALL HANDS TO EXECUTE THE ABOVE FIRE BILL PROCEDURES.

(Fire bills shall be reviewed semi-annually by the command Fire Warden)

REVIEWED BY: _____ DATE: _____

REVIEWED BY: _____ DATE: _____

REVIEWED BY: _____ DATE: _____

Figure 4-1. Fire Bill Procedures

4-3.3.2. A two-way radio system should be installed on the installation for use in firefighting as well as in disaster work and for security purposes. The radio system should consist of a stationary transmitter, located beyond inhabited building distance of potential explosion sites, plus a sufficient number of portable sets for use in such locations as local conditions dictate. Stationary transmitters shall be provided with a standby source of power, and all radios shall be operated and posted as discussed in paragraphs 2-1.10 and 2-1.10.3 and in compliance with the facility's Emission Control Bill and NAVSEA OP 3565 Volume 2.

4-3.3.3. To warn all personnel within the building of a fire or other emergencies that require prompt evacuation, or to announce specific emergency duties for which they are responsible, an audible, manually-operated emergency warning alarm should be installed. In railroad yards, a prearranged signal shall be sounded when notice of a fire is received. Engine whistles may be used to give warning in the absence of a regular fire alarm. Likewise, in pier and wharf areas, a prearranged signal shall be sounded in an emergency. The prearranged signal may be the general alarm, a ship's bells, a whistle, or a siren.

4-3.4. FIRE DRILLS. Frequent and regular fire evacuation drills should be held as warranted by the size of the building and the number of occupants. If emergency exits other than the usual doors or stairways are provided, it is important that personnel be instructed to use them. Organizing personnel for fire drills is essential. Only personnel assigned specific emergency duties when a fire occurs shall remain in the building during a fire drill. Unannounced fire drills involving motorized emergency vehicles are prohibited. To prevent any misunderstanding, no emergency drill for a fire or other disaster that requires the use of the prearranged emergency warning alarm shall be held in and around any PES, particularly pier areas or explosive operating buildings, while ammunition handling operations are underway. Similarly, all fire or disaster drills conducted at a pier shall be announced to all ships at the pier well in advance of the drill.

4-3.5. FIRE DEPARTMENT. Fire department structural standards relating to equipment and personnel requirements for naval shore activities are contained in OPNAVINST 11320.23 (series). Supplementary requirements for fire departments at naval activities that include pier and wharf facilities follow.

4-3.5.1. Motorized Equipment. Motorized firefighting equipment will be provided in accordance with OPNAVINST 11320.23 (series) and paragraph 4-3.10.2.1.

4-3.5.2. Training. Port firefighting personnel from adjacent communities and/or installations should be given specialized training. They should be made familiar with the fire regulations of the installation and with the operation and location of all guard phones, alarm boxes, standpipe and sprinkler valves, pumps, motors, and other equipment in the area. They also should be familiar with proper procedures to be followed when fighting fires with foam or fog, rescuing personnel, and using self-contained breathing apparatus (SCBA). When practical, all firemen should be given training in attacking problem fires on a pier and aboard ship.

4-3.5.3. Auxiliary Fire Brigades. Auxiliary fire brigades should be organized when feasible and should receive basic training in standard procedures for firefighting on vessels with fog or foam and for using SCBA. These fire brigades should also be familiar with the operation of auxiliary equipment and have practice in laying and discharging streams of water from 1½ and 2½-inch hose.

4-3.6. PORTABLE FIRE EXTINGUISHERS. Since many fires are small at origin, the availability and use of proper portable fire extinguishers will, in some cases, facilitate the suppression of incipient fires that might otherwise endanger life and property. However, the fire department shall be immediately

notified of any fire. This alarm shall not be delayed while portable fire extinguishers are being used. Although fire extinguishers represent an important element of any overall fire protection program, their effectiveness is dependent upon the following factors:

a. The fire extinguisher is installed and maintained in fully operable order in accordance with the local fire bill.

b. The fire extinguisher is the appropriate type for the fire that may occur.

c. The fire is discovered while small enough for the fire extinguisher to be effective.

d. The person operating the fire extinguisher knows how to operate it and does so confidently and calmly.

4-3.6.1. General Requirements. At a minimum, fire extinguishing equipment shall be readily available at PESs when MHE is being used. If this equipment is not readily available at the job site, personnel shall be required to take it with them during handling operations. Installation of fire extinguishing equipment on MHE satisfies the job-site requirement.

4-3.6.2. Selection Criteria. Portable fire extinguishers may contain powder, liquid, or gases that can be expelled under pressure to suppress or extinguish a fire. The selection of an extinguisher depends primarily upon the type of fire that is anticipated. Table A-2-1, NFPA 10 (current revision), should be used as a guide in selecting the appropriate extinguisher. The basic types of fires are classes A, B, C, and D. These are defined as follows:

a. Class A fires involve ordinary combustible materials like wood, cloth, paper, rubber, and many plastics. Extinguishers to be used shall be water, antifreeze, foam, Aqueous Film-Forming Foam (AFFF), wetting agent, loaded stream, or multipurpose dry chemical.

b. Class B fires involve flammable liquids, oils, greases, tars, oil base paints, lacquers, and flammable gases. Extinguishers to be used shall be carbon dioxide or dry chemical.

c. Class C fires involve energized electrical equipment when the electrical nonconductivity of the extinguishing media is important. Extinguishers to be used shall be carbon dioxide or dry chemical.

d. Class D fires involve combustible metals like magnesium, titanium, zirconium, sodium, lithium, and potassium. Local requirements may govern the selection of particular models, but the extinguishers to be used shall be types approved for use on the specific combustible-metal hazard.

NOTE

Extinguishers equipped with metal nozzle horns are not considered safe for use on fires involving energized electrical equipment and therefore shall not be used to fight Class C fires. When electrical equipment is de-energized, extinguishers for class A or B fires may be used safely.

4-3.6.3. Distribution. Portable fire extinguishers shall be distributed according to the requirements of NFPA 10 (current revision).

a. The presence of portable fire extinguishers is acceptable at non-dedicated ordnance handling piers or wharfs and inside sheds or buildings on a pier or wharf where there is a 10-minute response time for motorized fire-fighting equipment when explosives operations are being conducted for any NEW 100 pounds or less. Portable extinguishers must be located so that a person will not have to travel more than 50 feet from any point to reach the nearest unit. For NEW above 100 pounds, ordnance handling operations must meet the requirements of paragraph 4-3.8.3.

b. Twenty- or 30-pound ABC rated multipurpose dry chemical extinguishers should be provided along the length of the pier or wharf at 150-foot intervals. Fifteen-pound carbon dioxide extinguishers, or others like the 20-pound dry chemical or other suitable nonfreezing type for class B or C fires, should be provided along the length of a pier or wharf at 200-foot intervals. These extinguishers may be grouped with the water-type extinguishers.

c. One stored pressure or load stream water fire extinguisher should be provided in each refuge bay along the trestle.

d. One extinguisher per floor should be provided in administration and other buildings on piers or wharves, with additional units per floor in the larger buildings where travel distance to the nearest extinguisher may exceed 50 feet. In accordance with NFPA 10, these extinguishers should be selected for the type of fire that may be expected in the building.

e. In open dunnage and storage yards, extinguishers should be distributed along the main roads and cross aisles so that maximum travel distance to the nearest extinguisher does not exceed 75 feet.

f. Signs should be provided throughout the area to indicate the location of fire extinguishers, fire-alarm boxes or telephones, standpipe and hose. When necessary, instructions for the proper use of extinguishers and fire-reporting devices should also be posted.

4-3.6.4. Inspection and Maintenance. The procedures for inspection, maintenance, and recharging of fire extinguishers vary considerably and the requirements of NFPA 10, chapter 7, Inspections, Maintenance, and Recharging, shall be followed.

4-3.7. WATER SUPPLY SYSTEMS. Water supply systems shall be designed in accordance with the criteria set forth in UFC 3-600-01 (series).

4-3.7.1. Water Sources. Every effort shall be made to ensure that adequate supplies of water are available for firefighting purposes. Water sources shall also comply with the requirements defined in paragraph 4-3.8.

4-3.7.2. Storage Requirements. The requirements for fire protection water storage assume only one fire at a time. Sufficient water storage is required to equal the fire protection water demand over the expected duration of water use. This quantity shall be available to meet fire protection requirements at all times. Storage for domestic, industrial, and other demands shall be added to these requirements to determine the total amount of water storage necessary at an activity. No separate water storage facility is normally required if the public water system supplying the naval activity is reliable, provides a minimum of two connections to the activity, has adequate capacity and pressure to meet the activity's water requirements, and has continuous reserve storage capacity equal to the required fire protection water storage.

4-3.7.2.1. Reduction in Storage Capacity. When computing the fire protection storage requirement, a reduction in storage capacity is acceptable if an adequate replenishment source is available. Factors

that shall be evaluated include the reliability of the make-up facility; its sustained flow capacity; its method of operation, automatic or manual; and flow limitations imposed by the capacity of treatment operations.

4-3.7.2.2. Total Storage Capacity. The total water storage requirement for all purposes at an activity is based on the storage required to supply the peak fire flow demand plus 50% of the peak daily domestic consumption.

4-3.7.2.3. Replenishment of Storage. The water storage must be self-replenishing. It shall reach required volume during normal consumption within 48 hours after being depleted.

4-3.7.2.4. Siting of Water Storage. Main water supply storage sites shall be located in areas specified by paragraph 7-13.7 (aboveground storage tanks) and paragraph 7-13.10 (underground storage tanks).

4-3.7.3. Fire Flows. Fire flows for a specific installation shall be determined on the basis of the requirements of UFC 3-600-01 (series). The following information is furnished as a guide.

a. The full fire flow should be required for the pier proper, whether or not sprinkler protection provided for the superstructure and/or the substructure serves part of the fire flow allocated to fighting a fire aboard ship.

b. Piers or wharves of fire-resistive construction that are designed to accommodate the loading of up to eight barges at a time, or for berthing two or less ocean-going vessels, should be provided with a fire flow of 2,000 gallons/minute for 4 hours. If four or less barges containing explosives or ammunition are to be loaded or unloaded, the flow may be reduced to 1,000 gallons/minute for 4 hours.

c. Piers requiring sprinkler protection, or those designed for berthing more than two ocean-going vessels or more than eight barges, should be provided with a fire flow of 4,000 gallons/minute for 4 hours.

d. The administration area, industrial area, general storage areas, and open storage areas, like dunnage yards that contain combustible material, should be provided with a fire flow of 1,000 gallons/minute for 4 hours. A fire flow of 2,000 gallons/minute for 4 hours should be provided if the area contains over 1,000,000 board feet of lumber or other equally combustible material.

e. The classification and in-transit yards should have a fire flow of 1,000 gallons/minute for 2 hours.

4-3.7.4. Pumping Requirements. The following requirements apply to pumps for fire protection.

4-3.7.4.1. Equipment. Fire protection pumps shall have adequate capacity with reliable power and water supply. They shall conform to the requirements of NFPA 20 and UFC 3-600-01 (series).

4-3.7.4.2. Power Source for Fire Pumps. In locations where electricity from only one reliable source is the primary source of power for fire pumps, at least 50% of the pumps should be provided with standby power units having internal combustion engines or the equivalent. This standby power is not necessary if there are two or more independent electric power supply lines available to power the fire pumps. If electric power is the only source of power for the fire pumps, special attention shall be given to providing a safe location for the power lines and transformers as they may be damaged by an explosion.

4-3.7.4.3. Units of Pumping Equipment. Pumping equipment that provides more than 1,000 gallons/minute should be divided into two or more units. All pumps should deliver their rated output of water with required residual pressure at all outlets on the system.

4-3.7.4.4. Maintaining Pressure in Mains. When the required quantity of water under pressure is not immediately available, at least one pump should be provided with automatic controls designed to start the pump when the pressure in the main drops below a predetermined point. Under these circumstances, pressure in the mains normally can be maintained by a small make-up pump set to keep the pressure above what is needed to operate the fire pump.

4-3.7.4.5. Installation. Installation of fire pumps should conform to all applicable sections of the latest edition of NFPA 20. Fire pump houses should have a fire-resistant construction. If this is not practical, the building should be provided with automatic sprinkler protection.

4-3.7.4.6. Inspection and Tests. At least once each week, the prime movers and pumps shall be tested in accordance with the requirements of NFPA 20. A record shall be kept that includes the date and time of tests, the length of run, unusual conditions, and service rendered. Full flowing tests at 100% and 150% of rated capacity shall be conducted annually.

4-3.8. WATER DISTRIBUTION SYSTEMS. The water distribution system shall be planned and designed in accordance with the design requirements of UFC 3-600-01, UFC 3-420-01, UFC 3-410-02N, UFC 4-826-10, UFC 3-430-09N, and UFC 3-230-02 to supply the full required fire flow. The ability of the water distribution system to supply the required water flow is determined by the Naval Facilities Engineering Systems Command on the basis of local conditions. These conditions include vulnerability of building areas to a single fire, spacing between buildings that lessens/increases the danger of a fire spreading, and availability of automatic extinguishing equipment. Special consideration is given to materials used for the distribution system, sectioning of the system, and distribution of hydrants to prevent serious impairment in the event of an emergency. Water distribution systems shall comply with the following requirements.

4-3.8.1. Layout of System. Design requirements for system layouts are described in UFC 3-600-01, UFC 3-420-01, UFC 3-410-02N, UFC 4-826-10, UFC 3-430-09N, and UFC 3-230-02. The water distribution system should be designed with sectional controlling valves so that damaged sections of the main can be cut off without impairing the remainder of the system. Water mains should not be located under railroads or roads that are used to convey large quantities of explosives or ammunition. Water mains also should be at least 400 feet from high explosive magazine areas because a detonation may rupture the main. When water mains must pass under railroads or roads, their locations shall be appropriately marked with signs, and railcars and motor vehicles loaded with explosives or ammunition shall not be permitted to remain over water mains longer than is necessary for continuous travel. Water mains under railroads or roads should have cutoff valves on both sides of the railroad or road. Lateral lines are not subject to these restrictions. In the layout of water distribution systems at new ordnance establishments, all fire hydrants should be connected to a looped-grid system that provides an adequate supply of water from more than one direction.

4-3.8.2. Inspections and Tests. Tests and inspections of the water distribution system shall be conducted in accordance with UFC 3-600-01 and UFC 3-600-02 (series).

4-3.8.3. Pier and Wharf Area Requirements. The water distribution systems on piers and wharves at ammunition terminals, or piers and wharves used for the primary purpose of ordnance handling, shall comply with the following requirements.

a. Only cast iron or welded steel pipes shall be used for water mains on piers and wharves, and in the adjacent area. Cement or reinforced concrete pipe may be used in the underground distribution system if it cannot be damaged by ground shock.

b. When automatic sprinklers are installed, the distribution system should be designed to provide adequate fire flows to the sprinklers.

c. Pipe size should be at least 8-inch diameter. The system should be made into a complete grid so that all of its pipe sections may be fed from at least two directions.

d. The main on the pier should consist of at least 8-inch diameter pipe arranged in a loop or grid located so it is protected against mechanical injury. On piers or wharves made from combustible material, fire mains should be supported from major structural members rather than from the pier deck. When pier decks are made of concrete and their piles are wooden, the mains should be supported from the concrete decks.

e. If water lines on piers or wharves are subject to freezing, the lines should be enclosed in at least 2 inches of mineral wool or other suitable lagging and placed within substantial boxing. In addition, lines should be provided with either steam or hot-water tracer lines that heat the water with a small heater and circulate it with a small pump.

f. Gate valves should be provided at approximately 5,000-foot intervals in long supply lines, and at intervals of from 1,200 to 1,500 feet on main distribution loops or feeders. They should also be provided on all primary branches connected to the main lines. All sections of the distribution system within one-half mile of the loading pier or railroad yards should be provided with valves at least every 800 feet. It is desirable to place gate valves in the water lines at the point where they leave the land and enter onto the pier so that the fire line will remain in service even if the pier collapses.

g. Fire hydrants should be placed at 300-foot intervals on both sides of the pier, from one end to the other. At marginal wharves, these hydrants may be replaced by hydrants along the adjacent shore, if it is possible to lay hose lines directly from the hydrant to the wharf and the hydrants are within 150 feet of the water side of the wharf. Where standard fire hydrants cannot be installed on the pier or wharf, two 2½-inch wharf hydrants or approved flush-type fire hydrants should be installed at 300-foot intervals in properly covered pits along both sides of the pier or wharf. Other fire hydrants should be provided in areas specified in paragraph 4-3.8.4.

h. Standpipe and hose systems are not ordinarily required at loading piers, wharves, or backup storage areas. However, when the pier or wharf design permits, and water pressures are in excess of 80 psi, it may be desirable to couple a maximum of 200 feet of 1½-inch hose to the hydrant butts to reduce the time needed for hose streams to reach the fire. Hydrant wrenches shall be placed at these locations. Hose houses should be provided to protect the hose.

i. Refer to paragraph 4-3.10.2 for requirements concerning supplementary equipment, such as fire boats and standby tugs, for water pumping at pier and wharf facilities.

4-3.8.4. Hydrant Spacing. Standard fire hydrants should be provided for classification or in-transit yards at intervals of no more than 500 feet. They should be alternately spaced and, if possible, placed on both sides of the yard. In the dunnage yard and warehouse areas, standard fire hydrants should be within 300 feet of each other. In the administration area, hydrants should be located so all buildings are within 500 feet of two hydrants. Because an emergency may make the pier hydrants useless, at least one hydrant should be located within 150 feet of the pier approach. All hydrants, including those

adjacent to railroad yards, shall be located and installed so they are accessible to firefighting equipment.

4-3.9. SPRINKLER SYSTEMS. Requirements for automatic sprinkler systems will be based on criteria in UFC 3-600-01 (series). Automatic sprinklers are desirable throughout all main buildings that are made from combustible materials, and in buildings made from noncombustible materials that are located in areas where combustible materials are stored or processed. Wet pipe sprinkler systems are required where missile assembly, inspection, or storage is performed. Similar protection shall be provided for torpedo and air underwater weapon shops. If it is desired to use buildings not equipped with automatic sprinkler systems for nonworking-hour storage, a waiver shall be obtained in accordance with paragraph 1-6 of this manual. All combustible pier substructures should be provided with standard automatic sprinkler protection. This includes all structures with wood piling regardless of the construction of the decking. Requirements for automatic sprinklers will be made by the Naval Facilities Engineering Systems Command based on the criteria in UFC 3-600-01 (series). Sprinkler systems should not be installed, or if installed, shall be shut off where water will increase the fire hazard. In special cases when commanding officers have determined that an automatic sprinkler system is either not required or that jeopardy to the building contents imposed by the presence of an automatic sprinkler system far exceeds or overshadows the hazards of unattended explosives, requests for deviation from the above requirements, with all supporting justification, shall be forwarded to NOSSA for approval. Facilities and test bays, such as bomb-proofs, in which test and evaluation operations take place that involve the intentional ignition or initiation of energetic or ordnance materials are excluded from the requirement for automatic sprinkler systems. Sprinkler systems are not required for magazines unless they are an integral part of an explosive operating building.

4-3.9.1. Installation. Standards for sprinkler system installation on piers and wharves are outlined in NFPA 307. Automatic sprinkler system design and installation for ordnance production facilities shall conform to the standards outlined in the NFPA 13, as modified by the design criteria given in UFC 3-600-01 (series). Automatic sprinkler systems in ordnance facilities shall be provided with flexible couplings and sway bracing similar to that provided for buildings in earthquake zones. Specific automatic sprinkler protection requirements for areas within these structures are as follows:

4-3.9.1.1. High-speed (operation of 0.5 seconds or less), preprimed, deluge systems are required wherever exposed powder, explosives, or propellants are processed or stored. Complete protection of such locations is essential.

4-3.9.1.2. Ordinary deluge systems are required in other areas or auxiliary sections of buildings in which processing or storage of explosives or propellants takes place.

4-3.9.1.3. Wet-pipe sprinkler systems are required in other areas or auxiliary sections of buildings if separated by fire partitions.

4-3.9.1.4. Wet-pipe or preaction sprinkler systems are required where missile assembly inspection or storage is conducted and where the propellant is confined within the missile or warheads. Similar protection shall be provided for torpedo and AUW shops. If electronic equipment is present in assembly and inspection areas, preaction sprinkler systems may be provided.

4-3.9.1.5. Heat detection equipment of any type is acceptable if it meets the operating time limitations and is suitable in other respects, such as complying with explosion-proof requirements. When pneumatic-type detection equipment is used, not more than three detectors, and preferably only one, shall be on a single circuit. They must be in the same heat influence area. Photoelectric detectors may

be used for spot or for local protection applications, but shall not substitute for area or room heat detectors.

4-3.9.1.6. A system providing complete supervision of all deluge and pre-action systems shall be provided so that any deficiency that develops that would affect the speed or reliability of operation will give a distinctive alarm separate from the water flow alarm.

4-3.9.2. Water supplies for deluge systems shall be adequate to supply the total demand of the largest fire area at the specific residual pressure required by the system, plus an allowance for hose stream demand, for a period of 45 minutes.

4-3.9.3. Water Supply. A sprinkler system should draw its water directly from the water main, independent of the service supply in the building where it is installed. The system should have a pumper hose connection through which the fire department can pump water into the sprinkler system if auxiliary water is needed.

4-3.9.4. Sprinkler System Identification. Lines and valves of sprinkler systems should be marked with red paint and arranged so they cannot be confused with the service systems of the building. However, paint shall not be applied to valves, indicators, and sprinkler heads in the system in a manner that could cause the devices to malfunction. Precautions shall be taken to prevent the storage of materials that become more hazardous when wet in buildings that contain sprinkler systems.

4-3.9.5. Sprinkler System Protection. If located where they are susceptible to mechanical damage, sprinkler system components shall be protected with approved guards or shields. Where system components are exposed to possible frost, they shall be properly protected against freezing. Sprinkler systems on piers and wharves usually require protection against corrosion. Sprinkler heads normally should be lead-coated. When installed under piers that are subject to direct wash or submersion, the lead-coated heads should also be wax-coated. The coatings shall not materially alter the discharge pattern of the head. Where high tides may float debris against them, piping and heads should be properly protected against mechanical damage.

4-3.9.6. Draft Prevention. The operation of some sprinkler systems depends upon heat from an incipient fire melting the seal on the links or sprinkler heads. The melting temperature should be as low as possible considering the use of the location. This may be as low as 115°F [46.1 degrees Celsius (°C)]. However, it is necessary to eliminate any conditions that can cause a draft and prevent the heat from the fire from concentrating at the links. Such conditions include openings in floors, partitions, tunnels, and shafts.

4-3.9.7. Valve Requirements. In addition to a sprinkler shutoff valve in the building, a post indicator valve should be provided outside of, and at a safe distance from the building. All sprinkler shutoff valves shall be kept open except when the system is being repaired.

4-3.9.8. System Pressure. Pressures ranging from 80 to 100 pounds per square inch are recommended for sprinkler systems. Normally, Siamese pumper connections located outside buildings are specifically required for Navy systems. Buildings that the fire department may not approach in the event of fire should be excluded from the requirement of pumper connections. Sprinkler system pressure gauges should be located in prominent places at least 5 feet above the floor.

4-3.9.9. System Inspection and Maintenance. Automatic sprinkler systems should be inspected regularly and maintained according to procedures outlined in NFPA 25, as modified by UFC 3-601-02

(series). Sprinkler systems shall be inspected and tested by removing the nozzles and/or sprinkler heads from the ends of branch lines and performing the following inspection and tests:

a. Inspect for the presence of scale, rust, or other debris within the nozzles and/or heads.

b. Activate the system using an appropriate adapter and hose, and flush all risers.

c. Clean and reinstall all nozzles and heads.

d. Give an annual wet test to all systems, except those noted below, and observe the action of all nozzles and open heads for proper flow. The fire chief or his designated representative shall be present at all wet tests. If any nozzles or heads give an indication of insufficient water flow, the inspection, flushing, and nozzle-cleaning procedures shall be followed. An annual wet test of sprinkler systems is not required at missile or torpedo test and assembly areas, or other protected areas where valuable electronic or mechanical equipment is installed. All other system maintenance and test requirements shall be met. In addition, the local safety office may exempt specific RDT&E operating buildings from the annual wet test requirement. This exemption must be in writing, and specifically identify which buildings are exempted from annual wet testing. Periodic dry trip testing will replace wet testing for those buildings or facilities which are exempted from wet testing.

e. Do not substitute the accidental activation of sprinkler systems, as a result of fires or other phenomena, for annual wet tests.

f. Prepare a schedule of annual wet tests, providing a 30-day tolerance period that takes production requirements into account. Wet tests shall never be delayed beyond this 30-day period.

g. Continue to give dry trip tests in accordance with existing schedules.

4-3.10. OTHER FIRE PROTECTION EQUIPMENT. Additional fire protection equipment includes equipment for railroads and terminals, and equipment for pier and wharf operations. This equipment should be installed, equipped, and maintained as specified in the following paragraphs.

4-3.10.1. Equipment for Railroad Yards and Terminals. Railroad yards and terminals on naval shore activities that are not within 10 minutes response time by motorized fire equipment, shall have the following equipment available on-site:

a. Hoses and Hose Carts. If water hydrants are available, hose carts or reels having a sufficient quantity of 1½-inch minimum width, single-jacketed hose equipped with nozzles to reach all areas of trackage. Adapters and spanner wrenches shall be mounted adjacent to the hydrants.

b. Fire Toolboxes. Fire toolboxes, painted red and plainly marked “For Fire Only,” should be installed adjacent to yard tracks at intervals of not more than 500 feet. These boxes shall contain at least the following: one fire axe, one shovel, one pinch bar, three fire pails, and one 5-gallon pump-type water fire extinguisher, nonfreezing if necessary, or a suitable equivalent.

c. Water Barrels. A properly maintained water barrel shall be placed beside each fire tool box.

4-3.10.2. Equipment for Pier and Wharf Operations. Fire protection measures shall be enforced and equipment shall be provided on all piers and wharves during ammunition and explosives loading and offloading operations. The shore activity shall be responsible for fire protection for the pier and associated structures. Ships berthed at the pier are responsible for fire protection on board ship.

Assistance from one to the other may be possible under some circumstances, but such assistance should not be required or expected. However, mutual assistance should be arranged as a prudent precaution. Paragraph 4-1.4 defines the minimum requirements with respect to fire hazard that must be met prior to ammunition and explosives handling.

4-3.10.2.1. Fire Protection on Piers. Piers that handle ammunition and explosives loading and offloading, other than dedicated ordnance handling piers, can be protected by motorized fire equipment, in-place fire mains with hydrants and hoses, under-pier sprinkler systems, fire boats or tugs equipped with fire monitors, or by a combination of this equipment provided the total NEW does not exceed 300 pounds. Because fire boat and tug accessibility cannot be assured, their use shall not be the primary means for combating pier fires. Piers and wharves used primarily for ordnance handling must meet the requirements of paragraph 4-3.8.3, but can be augmented by the above-mentioned equipment. The activity shall be prepared to fight a pier fire with motorized fire equipment. Motorized fire equipment shall be available within 10 minutes response time of each pier where ammunition and explosives are being handled. See paragraph 4-1.4 for specifications concerning fire inspections during pier and wharf operations.

4-3.10.3. Special Equipment. Where special equipment is necessary, it should comply with the following requirements.

a. All combustible pier or wharf substructures should be provided with a properly designed and installed standard automatic sprinkler system, as described in paragraph 4-3.9. If a sprinkler system cannot be provided, decks or piers with combustible substructures should have openings, at 35-foot intervals, that will permit the introduction of cellar pipes or revolving nozzles into the substructure. Other special equipment for fighting substructure fires, like oversize pipes, turret nozzles, or revolving nozzles mounted on floats or small boats, should be provided when appropriate. These nozzles are not necessary if the combustible substructure is protected by standard automatic sprinklers.

b. When only barges are being loaded, the fire department should be provided with no less than two 2½-inch combination fog and straight-stream nozzles, two 2½-inch standard nozzles with 1 1/8 -inch tips, and an ample amount of hose.

c. When ocean-going vessels are being loaded, the fire department should be equipped with a minimum of four 2½-inch fog nozzles, four standard 2½-inch nozzles with 1 1/8 -inch tips, and an ample amount of hose. Extension applicators should be provided for use with the fog nozzles.

d. There should be sufficient adjustable canvas ventilator covers to cover all openings to the boiler room even on the largest cargo vessels that may dock at the pier. A reserve set of these covers should be available as well. Ventilator covers are used to prevent fresh air from entering the boiler room. The canvas should be flameproofed.

e. Roof ladders of sufficient length to extend from any deck to the one below should be provided for additional access to ships' holds.

f. On equipment answering alarms at the pier, a minimum of four SCBA units with four reserve cylinders or canisters per unit should be provided. These units should be of a type approved by the United States Bureau of Mines, and should be provided in addition to the protective clothing, decontaminating and testing equipment, and gas masks that are required when loading or unloading hazardous ammunition that contains chemical filler materials.

4-3.11. STANDBY TUGS. Ammunition laden cargo ships present a significant hazard to the activity where they are berthed, as well as to adjacent ships. In order to minimize the hazard to the general public, naval personnel, facilities, and ships, the activity must have the option of either moving a ship/barge that is in danger of detonation away from nearby facilities and ships as discussed in paragraph 4-5.5.5, or to remove a loaded ship/barge. Therefore, a sufficient number of tug or pusher boats must be available to move all ships, including combatants, or ammunition loaded barges away from an ordnance handling pier in the event of an emergency during ammunition loading/unloading, or when a loaded cargo ammunition ship is in "cold iron" status at an ammunition terminal. The required number of tug or pusher boats will be determined by the activity commanding officer and will represent, at a minimum, those necessary to move the largest or most difficult vessel to maneuver. A tug that is within 30 minutes steaming time of the pier is considered available. When tugs are not located at the pier, they must be equipped with suitable communications equipment to ensure rapid response. All ships loading/unloading ammunition must maintain means of propulsion. The activity commanding officer, in conjunction with the ship commanding officer or master, will determine if the ship's own propulsion system is adequate to move the ship from the pier or whether tug assistance is also required. Ships that can provide propulsion within 30 minutes (that is, gas turbines, diesel-electric, power plant standdowns) are considered to meet the requirements for maintaining their own means of propulsion. Additionally, ships loading/unloading must meet the firefighting requirements of paragraph 4-1.4.2 and the pier SOP must include specific guidance on the movement of ships during emergency situation. Pre-established criteria should exist for determining when to move ships, where the ships should be moved, and priorities for which ship would be moved first, as discussed in paragraph 4-5.5.5. Figure 4-2 provides a summary of standby tug requirements respective to various berthing and handling scenarios.

4-3.11.1. Navy cargo ammunition ships (T-AOE, T-AKE and AS class) with cargo ammunition onboard, may secure their engineering plants and berth in "cold iron" status with written approval of the commanding officer of the activity providing the "cold iron" berth, and provided the conditions set by paragraph 2-5 are met.

4-3.11.2. Commercial vessels must maintain means of propulsion at all times, while berthed at an ordnance handling pier. The activity commanding officer, in conjunction with the ship master, will determine if the ship's own propulsion system is adequate to safely move the ship from the pier, or whether tug assistance is also required.

4-3.11.3. Tug assistance must be available when barges are loading/unloading ammunition or when an ammunition laden barge is berthed at an ordnance handling pier or an explosives anchorage.

4-3.11.4. The following criteria applies to obtaining deviations from standby tug criteria:

a. Activities unable to meet these requirements must notify the appropriate fleet commander and Commanding Officer, NOSSA of their shortfalls in emergency response capabilities and of risks associated with not having sufficient tug boat capabilities. Because these shortfalls place Navy personnel and vital ordnance handling facilities at increased risk, continuation of ordnance handling operations with Navy vessels will require a Chief of Naval Operations (CNO) approved waiver in accordance with paragraph 1-6.1, with concurrence from the appropriate fleet commander. Concurrence with the waiver must also be obtained from the Military Sealift Command (MSC) for ships under their charter.

b. Handling of ammunition or explosives to or from commercial ships not under MSC charter without adequate means of movement from the pier will require a OPNAV event waiver for each handling evolution. Operational necessity must be certified by the service or other U.S. Government

agency that owns the ammunition being handled, with the concurrence of the appropriate fleet commander.

c. Waivers will not be issued for simultaneous deviations from both the tug boat requirement and the need to maintain propulsion for a ship loading/unloading ammunition. Such a waiver would completely eliminate the option of moving a ship at the time when the risk of an incident is greatest. There must be one means of movement available for ships loading/ unloading ammunition. When a waiver of Explosives Safety Quantity-Distance (ESQD) requirements has been issued, the ship creating the waiver, as well as any other loaded cargo ammunition ship at the same pier complex, must be capable of getting underway within 15 minutes.

NOTE

Tugs are not required to be standing by during explosives and ammunition handling operations involving combatants at naval stations and similar support activities. Such operations usually involve limited quantities of ammunition and explosives. They are known as “top-off” or “exchange” evolutions. Motorized or structural firefighting equipment shall be available.

Ship Status	Tug Criteria
Loading/unloading	Shall maintain means of propulsion and tugs/pusher boats shall be available if necessary
Cold iron (loading/unloading) Gas Turbine Ships/Diesel-electric	Not authorized Tugs/pusher boats shall be available if necessary
Cold iron (loaded)	Sufficient number of tugs/pusher boats shall be available
Commercial vessels berthed at Navy ordnance pier	Shall maintain means of propulsion and sufficient tugs/pusher boats if necessary
Loaded Ship under ESQD Waiver	Shall maintain means of propulsion and tugs/pusher boats shall be available if necessary.

Figure 4-2. Standby Tug Criteria Summary for Cargo Ammunition Ships

NOTE

A tug that is available within 30 minutes steaming time of a pier is considered available. See paragraph 4-3.11 for additional details

4-3.12. FIRE RATE ASSEMBLIES. Structures which provide fire protection include fire walls, fire stops, and fire doors and exits.

4-3.12.1. Fire Walls. Unless they are concrete masonry unit construction, fire walls in buildings are not effective firebreaks. Communicating openings in fire walls shall be protected by approved, maintained fire doors. The fire doors shall close properly without obstruction. Paragraph 8-4.1.3.3 gives additional requirements for fire wall design and installation.

4-3.12.2. Fire Stops. Piers and wharves constructed of combustible material shall be subdivided by transverse fire stops in accordance with NFPA 307.

4-3.12.3. Fire Doors and Exits. Fire doors covering openings in walls to restrict the spread of fire within buildings shall comply with the standards for use, installation, and maintenance contained in NFPA 80. The requirements of NFPA 101 shall be followed if fire doors also serve as exit doors.

4-4. FIREFIGHTING HAZARD IDENTIFICATION.

This paragraph establishes the standard firefighting hazard identification measures that ensure minimal risk when fighting fires involving ammunition and explosives. These identification measures are based on the classification of fires into four divisions according to the hazard each type presents.

4-4.1. FIRE DIVISIONS. The fire divisions correspond to the explosive HC/D 1.1 through 1.6 described in paragraph 3-8, and are numbered serially by Arabic figures from 1 to 6. Fire division 1 indicates the greatest hazard. The hazard decreases with ascending fire division numbers from 1 to 4; fire divisions 5 and 6 refer to explosion hazards from less sensitive substances and extremely insensitive articles, respectively. The degree of hazard is based on the burning or explosive characteristics of the materials involved. The divisions are as follows:

Fire Division	Hazard Involved
1	Mass Explosion
2	Fragment Producing
3	Mass fire
4	Moderate fire
5	Mass explosion (Very insensitive explosive substance)
6	Non-mass explosion (Extremely insensitive explosive article)

4-4.2. FIRE HAZARD SYMBOLS. Each fire division and chemical hazard can be identified by a corresponding symbol. The definition and use of each symbol are described in the following paragraphs.

4-4.2.1. Fire Symbols. Four fire symbols cover the six explosive divisions described in paragraph 4-4.1. Because of similar firefighting hazards, the HC/D 1.1 fire symbol is also used for HC/D 1.5, and the HC/D 1.2 fire symbol is used for HC/D 1.6.

4-4.2.2. Each of the four fire symbols has a distinctive shape so that it is easily recognized by the firefighting personnel approaching the fire scene. For the purpose of long range identification, the symbols differ in shape as follows:

(1)	Octagon shape	Fire division 1 symbol
(2)	Cross shape	Fire division 2 symbol
(3)	Inverted triangular shape	Fire division 3 symbol
(4)	Diamond shape	Fire division 4 symbol

See figure 4-3 for illustrations of the four fire symbols.

4-4.2.3. All four symbols are colored orange. The color of the fire division identification number is black. This color scheme corresponds to that used by the North Atlantic Treaty Organization (NATO), the United Nations Organization (UNO), and the International Maritime Organization (IMO) to label class I explosives. The hazards and firefighting precautions for each symbol are summarized in table 4-1.

4-4.2.4. Storage buildings housing liquid energetics which require HC/D 1.1 QD shall be marked with fire symbol 1. Fire symbol 4 shall be used on storage buildings housing OTTO Fuel II. Although OTTO Fuel II is not a HC/D 1.4 material, fire symbol 4 is used to identify the moderate fire hazard for firefighting purposes. For determination of hazard classes of Extremely Insensitive Substances (EIS), see paragraph 7-5.2.2 and table 7-6.

4-4.2.5. Chemical Hazard Symbols. Chemical hazard symbols are used to identify operating buildings and storage facilities that contain pyrotechnics, chemicals, and other hazardous materials. These symbols shall be used by themselves or in conjunction with fire symbols, as appropriate. These symbols are specifically for firefighting situations and are not necessarily applicable to normal operating conditions.

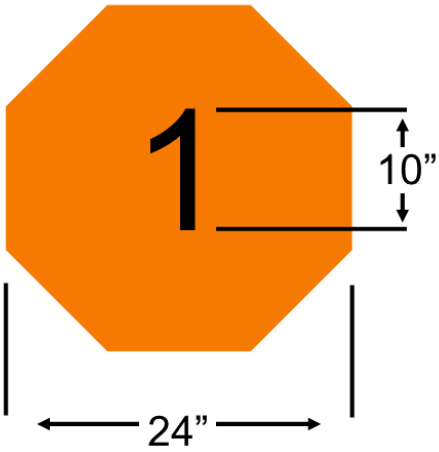

Class 1, Division 1
24" NSN-7690-01-082-0290
12" NSN-7690-01-081-9581

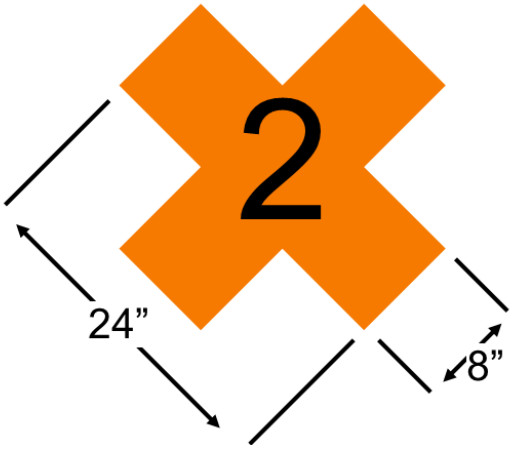

Class 1, Division 2
24" NSN-7690-01-082-0289
12" NSN-7690-01-087-7340

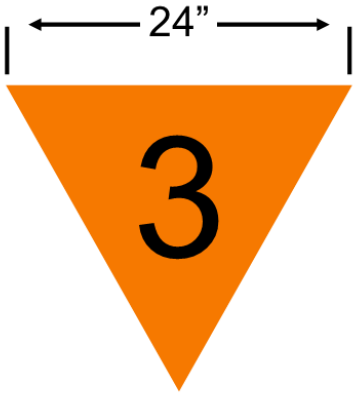

Class 1, Division 3
24" NSN-7690-01-081-9583
12" NSN-7690-01-081-9582

Class 1, Division 4
24" NSN-7690-01-082-6709
12" NSN-7690-01-081-9584

BACKGROUND: Orange #12246 (Fed. Std. 595A)
NUMBERS: 10" High and 2" Thick: Black #17038 (Fed. Std. 595A)
MATERIAL: Prismatic Diamond Grade (FP-79)

Figure 4-3. Fire Division Symbols

Table 4-1. Fire Symbol Hazards and Actions

Fire Symbol	Materials	Hazard	Action/Remarks
1	1.1 Explosives and certain liquid propellants	Mass explosion	Will not be fought unless a rescue attempt is being made. If there is suitable separation between nonexplosive and symbol 1 materials, and if approved by the fire chief, firefighting forces may attempt to extinguish the fire. If personnel safety is in doubt, take suitable cover.1
2	1.2 Ammunition and explosives	Fragment producing	Give the alarm and attempt to extinguish the fire if in an early stage. Firefighting forces should fight the fire. If not possible, prevent the spreading of the fire. Detonations of items could occur. Provide protection from fragments.2
3	1.3 Ammunition and explosives	Mass fire	May be fought if explosives not directly involved. If WP munitions are involved, smoke is liberated. WP munitions may explode. Phosphorus should be immersed in water or sprayed with water continuously. For fires involving HC and incendiaries. Water should not be used unless large quantities are available. Use dry sand or dry powder agent in the early stage. For fires involving pyrotechnics and incendiaries. Protect adjacent buildings and magazines. Do not use CO2, Halon extinguishers, or water. Allow magnesium to cool unless upon flammable material. In this case, use a 2-inch layer of dry sand or powder on the floor, rake the burning material onto this layer, and resmother.3
4	1.4 Ammunition and explosives	Moderate fire	Fight these fires. Expect minor explosions and hot fragments.

NOTES:

1. See paragraph 4-5.1.
2. Withdrawal distance is 2500 feet.
3. Withdrawal distance is 600 feet (inhabited building distance for quantities greater than 500,000 lb. NEW.)

4-4.2.6. Definitions. Hazard symbols represent the type of chemical being stored or processed. These symbols are illustrated in figures 4-4 and 4-5. The hazard designated by each symbol and the applicable firefighting precautions to be observed is summarized in table 4-2. Common chemicals, their compatibility groups, and the chemical hazard symbols required for storage areas are contained in table 4-3.

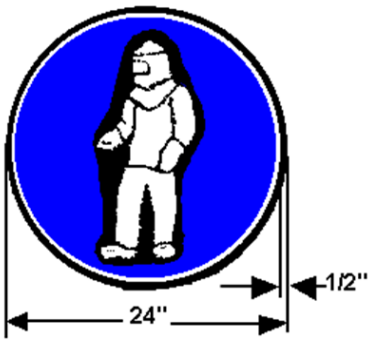

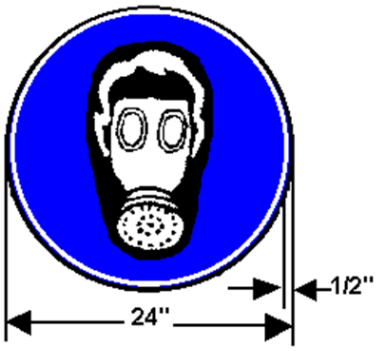

Symbol 1. Wear full protective clothing
Background is blue.
Figure and Rim are:

Red for Set 1 Protective Clothing
24" NSN 7690-01-081-9586
12" NSN 7690-01-081-9585

Yellow for Set 2 Protective Clothing
24" NSN 7690-01-081-9587

White for Set 3 Protective Clothing
24" NSN 7690-01-083-6272
12" NSN 7690-01-081-9588

Colors per Fed.Std. 595A or GSA catalog.
Red #11105
Blue #15102
Yellow #13538
White #17875
Black #17038

Symbol 2. Wear Breathing Apparatus
Background is blue.
Figure and Rim are white.

24" NSN 7690-01-081-9589
12" NSN 7690-01-082-6710

Figure 4-4. Chemical Hazard Symbols

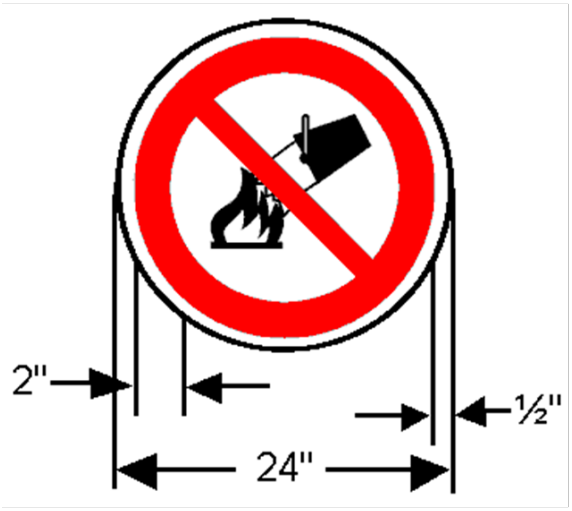

Symbol 3. Apply No Water

Background is white, circle and diagonal are red, figures are black.

24" NSN 7690-01-082-2254
12" NSN 7690-01-082-0292

Figure 4-5. Fire Direction Symbol

Table 4-2. Chemical Hazard Symbols and Actions

Chemical Hazard Symbol[5]	Chemical Substances (Compatibility Group)	Hazard	Firefighting Instructions
Full Protective Clothing--Set 1 (Red)[1]	Nerve/Blister Agents (K)[4]	Highly toxic as aerosol/vapor	1. Evacuate public 2 miles downwind or 1 mile upwind or to the sides. 2. Use munitions decontamination procedures. 3. If explosion does not occur, approach from upwind and extinguish fire.
Full Protective Clothing--Set 2 (Yellow)[2]	Riot Control/Smokes (G) Incapacitating Agents (K)	Toxic as aerosol/vapor	1. Approach from upwind and extinguish fire. 2. Decontamination may be required.
Full Protective Clothing--Set 3 (White)[3]	Triethylaluminum/Plasticized Triethylaluminum Smoke (L)	Spontaneously flammable	1. Do not look at burning material. 2. Do not use water.
	White Phosphorus/White Phosphorous Plasticized (H)	Spontaneously flammable when exposed to air.	1. Post fire guard until leaking phosphorous has been removed. 2. After removal of agents, post fire guard for 2 days for possible reignition. 3. Use putty knife to remove small amounts, then use blowtorch to burn off remainder.
	Napalm (J)	Mass fire	1. Fight fire as POL fire.
Wear Breathing Apparatus	HC Smoke (G)	High concentrations of smoke	1. Do not use water.
	Incendiary/Pyrotechnic Material (G)	Burns with extremely high temperature	1. Do not use water 2. Do not look at burning material.
	Napalm (J)	Mass fire	1. Fight fire as POL fire.
	Isobutyl methacrylate with oil (J)	Burns with extremely high temperature	1. Prevent spread of fire. 2. Smother incipient fires with dry chemical from portable fire extinguisher or cover with sand.
	TA Smoke/ Signaling Smokes (G)	High concentrations of smoke	1. Prevent spread of fire. 2. Smother incipient fires with dry chemical from portable fire extinguisher or cover with sand.

Table 4-2. Chemical Hazard Symbols and Actions (continued)

Chemical Hazard Symbol[5]	Chemical Substances (Compatibility Group)	Hazard	Firefighting Instructions
Apply No Water	HC Smoke (G)	High concentrations of smoke	1. Do not use water.
	Incendiary/Pyrotechnic Material (G)	Burns with extremely high temperature	1. Do not use water. 2. Do not look at burning material.
	Triethylaluminum/Plasticized Triethylaluminum Smoke (L)	Spontaneously flammable	1. Do not use water. 2. Do not look at burning material.
	Napalm (J)	Mass fire	1. Fight fire as POL fire.

NOTES:

1. Set 1 consists of command-approved gas masks/respirators or SCBA; butyl impermeable suit (coveralls, hood, gloves, fireman's boots and boot covers.)

2. Set 2 consists of command-approved gas masks/respirators or SCBA; coveralls; protective gloves. (Firefighting protective clothing and equipment may be used.)

3. Set 3 consists of command-approved gas masks/respirators or SCBA; flame retardant coveralls; flame-resistant gloves. Used primarily with white phosphorus and triethylaluminum. (Firefighting protective clothing and equipment may be used.)

4. Toxic chemical agents without explosive components that normally would be assigned to HC/D 6.1 may be stored as compatibility group K. In accordance with the Chemical Weapons Convention, the DON does not develop, produce, otherwise acquire, stockpile, or retain chemical weapons as explained in paragraph 1-7.5.

5. See NAVSEA SW020-AC-SAF-010. NAVSEA SW020-AC-SAF-010, Table 3-1 provides approved chemical hazard symbol and compatibility group codes for specific ammunition, explosives, and related hazardous material. For Navy items not addressed in NAVSEA SW020-AC-SAF-010, refer to the Joint Hazard Classification System for identification Table . For items not addressed in the aforesaid guidance, table 4-2 may be used.

Table 4-3. Compatibility Group and Chemical Hazard Symbols Required for Storage of Chemical Ammunition and Substances

Chemical Ammunition and Substances	Compatibility Group (2)	Full Protective Clothing			Breathing Apparatus	Apply No Water
		Set 1	Set 2	Set 3		
1	2	3	4	5	6	7
Toxic Chemicals (1)	K	X	-	-	-	-
O-Chlorobenzol	G	-	X	-	-	-
Smoke, Titanium Tetrachloride (FM)	G	-	X	-	-	-
Smoke, Sulfur trioxide-chlorosulfonic acid solution (FS)	G	-	X	-	-	-
Smoke, Aluminum-zinc oxidehexachloroethane (HC)	G	-	-	-	X	X
White Phosphorus (WP)	H	-	-	X	-	-
White Phosphorus plasticized (PWP)	H	-	-	X	-	-
Red Phosphorus (3)	G	-	-	X	-	-
Thermite or Thermate (TH)	G	-	-	-	X	X
Pyrotechnic Material (PT)	G	-	-	-	X	X
Calcium Phosphide	L	-	-	-	X	X
Signaling Smokes	G	-	-	-	X	-
Isobutyl methacrylate with oil (IM)	J	-	-	-	X	-
Napalm (NP)	J	-	-	X	X	X
Triethylaluminum	L	-	-	X	-	X
Plasticized Triethylaluminum	L	-	-	X	-	X

NOTES:

1. Toxic chemicals without explosives components that normally would be assigned to HC/D 6.1 may be stored as compatibility group K.

2. See chapter 7.

3. Full Protective Clothing Set 3 required, based on combustion of RP pyrotechnic devices producing residue or deposits of WP.

4-4.2.6.1. Personal Protective Equipment. The following subparagraphs describe special features of chemical hazard symbols, the hazards indicated by these symbols, and the recommended Personal

Protective Equipment (PPE) to be used for fighting fires involving these hazards. Personal Protective Equipment for other than firefighting situations are addressed in paragraph 2-4.

a. Set 1 PPE. When chemical hazard symbol 1 from figure 4-4 has a red rim and figure, it indicates the presence of highly toxic chemical ammunition that may cause death or serious damage to body functions. The following PPE, identified as set 1 in figure 4-4 and in column 3 on table 4-3, shall be used: MCU2P or M9 series protective gas masks, impermeable suits, impermeable hoods, impermeable boots, undergarments, coveralls, protective footwear, and impermeable gloves.

b. Set 2 PPE. When chemical hazard symbol 1 from figure 4-4 has a yellow rim and figure, it indicates the presence of harassing agents, riot control agents, and smokes. The following PPE, identified as set 2 in figure 4-4 and in column 4 of table 4-3, shall be used: MCU2P, M9, M17, or M40 series protective gas masks or SCBA, permeable coveralls, and protective gloves. Firefighting personnel equipped with normal heat-resistant clothing or bunker suits, and gas masks or SCBA, do not require the PPE identified as set 2 when they are fighting fires involving materials for which set 2 is specified in table 4-3. See figure 4-4, symbol 1 and table 4-3.

c. Set 3 PPE. When chemical hazard symbol 1 from figure 4-4 has a white rim and figure, it indicates the presence of WP and other spontaneously combustible material. The following PPE, identified as set 3 in figure 4-4 and in column 5 of table 4-3, shall be used: flame-resistant coveralls, flame-resistant gloves, and MCU2P, M9, M17, or M40 series protective gas masks or SCBA. Firefighting personnel equipped with normal heat resistant clothing or bunker suits, and gas masks or SCBA, do not require the PPE identified as set 3 when they are fighting fires involving materials for which set 3 is specified in table 4-3. See figure 4-4, symbol 1, and table 4-3.

4-4.2.6.2. Wear Breathing Apparatus Symbol. The chemical hazard symbol 2 in figure 4-4, identified in column 6 of table 4-3, indicates the presence of incendiary and readily flammable chemicals that present an intense radiant heat hazard. Protective masks shall be used to prevent inhalation of smoke from burning incendiary mixtures.

4-4.2.6.3. Apply No Water Symbol. The “Apply No Water” sign is intended for use with hazardous materials when the use of water may intensify or spread the fire or increase the hazard of an explosion. This symbol is described in figure 4-5. Applicable firefighting precautions are summarized in table 4-2. The “Apply No Water” sign may be placed together with any one of the other symbols if required.

4-4.2.7. Symbol Dimensions. The shape and size of the four fire division symbols/numbers, the chemical hazard symbols, and the fire direction symbol are shown in figures 4-3 through 4-5. For application on flight line Ready Service Lockers/Magazines, hangar doors to flight equipment rooms, seat shops doors or lockers inside buildings, half-sized symbols may be used.

4-4.2.8. Procurement of Symbols. Fire and chemical hazard symbols may be obtained through normal Navy supply channels. National stock numbers (NSN) of standard and half-size symbols are listed in figures 4-3 through 4-5.

4-4.2.9. Posting of Symbols. The fire HC/D symbol or symbols that represent the most hazardous material present and the appropriate chemical hazard symbol, or symbols, shall be posted outside hazardous materials storage sites and operating buildings unless security considerations make it undesirable to identify the materials present at the site. In these cases, the posting of firefighting and chemical hazard symbols will be at the discretion of the activity commanding officer. The contents of magazines not posted will be identified on the activity fire map discussed in paragraph 4-3.2. A posted symbol should be situated so it is visible during daylight from a distance of 500 feet. If visibility is

obstructed by vegetation, curves in roads, etc., the symbol shall be placed on the roadway so as to be visible from a distance of 500 feet. One symbol posted on or near the door end of an igloo magazine, or on the headwall of a box-type magazine, is normally adequate. One or more symbols may be required on other buildings. When all material within a storage area is covered by one fire symbol, it may be posted at the entry control point or on the access roadway. When different classes or divisions of explosives are stored in individual multi-cubicle bays or module cells, they may be further identified by posting the proper symbol on each bay or cell. Placement of symbols shall be coordinated with the station fire department. Backing material for symbols should be in the shape of the symbol decal and should be constructed of noncombustible material. HC/D symbols are not required to be posted on buildings that contain small quantities of HC/D 1.3 and 1.4 material used by security/alert forces; however, these locations shall be reflected on the activity fire map. If material is stored in interior rooms or in cabinets located inside buildings, a fire symbol must be posted on the front of the interior door(s) and/or cabinets. Empty or inert signs shall be posted and fire division/chemical hazard symbols removed or covered on storage sites and operating buildings where all hazardous content has been removed.

4-4.2.10. Hazard identification placards for fighting fires in magazines housing other than Class 1 Explosives are described in NFPA 704, chapter 9.

4-5. FIREFIGHTER MEASURES.

Fires occurring at PESs can vary greatly in intensity and effects depending on the materials involved. Certain explosives will detonate with devastating results immediately upon contact with a spark or flame, or when subjected to frictional heat or concussion. Additional fires may result from the detonation. Some explosive substances develop heat so intense that direct firefighting efforts are impossible. Explosions or burning explosives will most likely produce toxic smoke or fumes dangerous to life and health. Therefore, appropriate PPE and training are required to combat these situations.

4-5.1. SAFETY CONSIDERATIONS. The following safety measures shall be observed when fighting fires that involve ammunition and explosives.

4-5.1.1. All fires starting in the vicinity of ammunition or explosives shall be reported immediately and firefighting shall be initiated with all available means and without awaiting specific instructions. If the fire involves explosive material, if it is supplying heat to explosives, or if it is so large that it cannot be extinguished with the equipment at hand, personnel in the area shall evacuate and seek safety.

4-5.1.2. Emergency withdrawal distances for nonessential personnel are intended for application in emergency situations only and are not to be used for facility siting. Emergency withdrawal distances depend on fire involvement and on whether or not the hazard classification, fire division and quantity of explosives are known. The withdrawal distance for essential personnel at accidents shall be determined by emergency authorities on site. Emergency authorities shall determine who are essential personnel.

4-5.1.3. If a fire involves explosives or involvement is imminent, the initial withdrawal distance applied shall be at least the inhabited building distance while the appropriate emergency withdrawal distance for nonessential personnel is being determined. When emergency authorities determine that the fire is, or may become uncontrollable and may result in deflagration and/or detonation of nearby ammunition or explosive material, all nonessential personnel shall be withdrawn to the appropriate emergency withdrawal distance listed in table 4-4. If fire is not affecting explosives or involvement is not imminent, emergency authorities shall determine the withdrawal distance based on the situation at hand.

4-5.1.4. Structures or protected locations offering equivalent protection for the distances listed in table 4-4 may be used in lieu of relocating personnel from the structure and/or location to the specified emergency withdrawal distance.

4-5.1.5. Commanding officers will conduct emergency planning in accordance with paragraph 4-2 and develop evacuation plans for their activities that reference the appropriate withdrawal distances as part of the disaster response plan. The commanding officer is responsible for alerting civilian authorities of any imminent explosive accident on the activity that may affect the local community and for providing these authorities with the appropriate emergency withdrawal distances.

4-5.1.6. Ammunition containing both explosives and chemicals (see table 4-3) requires special attention and precautions in firefighting. Such ammunition may belong to different fire divisions depending on the kind and quantity of explosives contained. Fires involving ammunition containing both explosives and chemicals shall be fought in accordance with their fire division characteristics. Additional hazards resulting from the effects of the chemicals and the associated special measures required in the fighting of those fires, like fires of WP, ammunition shall be considered. Refer to paragraph 4-5.1.2.

4-5.1.7. Entry to underground storage facilities following a fire or explosion requires special precautions. Monitoring for the presence of toxic fumes, oxygen depleted atmospheres and structural damage shall be performed during initial entry following an accident. Commanding officers will develop written procedures that define actions to be taken in such emergency situations.

Table 4-4. Emergency Withdrawal Distances for Nonessential Personnel[2]

Fire Symbol	Hazard Class/Division	Unknown Quantity	Known Quantity
Unknown	Facility, truck and/or tractor-trailer	4,000 ft	4,000 ft
	Railcar	5,000 ft	5,000 ft
1	1.1 (Explosive A) and 1.5[1]	Same as unknown hazard classification	For transportation, use 2,500 ft minimum distance for 500 lbs and below. Above 500 lbs for railcar use 5,000 ft minimum distance; otherwise, use 4,000 ft minimum distance. Use 4,000 ft minimum distance for bombs and projectiles with caliber 5-inch or greater. For facilities, use 2,500 ft minimum distance for 15,000 lbs and below. Use 4,000 ft minimum distance for net explosive weights above 15,000 lbs and less than or equal to 50,000 lbs. Above 50,000 lbs, use d (distance) $=105w^{1/3}$
2	1.2 (1.2.1, 1.2.2, and 1.2.3) (Explosive A) and 1.6[1]	2,500 ft	2,500 ft
3	1.3 (Explosive B)	600 ft	Twice the inhabited building distance (table 7-21) with a 600 ft minimum range.
4	1.4 (Explosive C)	300 ft	300 ft

NOTES:

1. For HC/D 1.1 and 1.2 items, if known, the maximum range fragments and debris will be thrown (including the interaction effects of stacks of items, but excluding lugs, strongbacks, and/or nose and tail plates) may be used to replace the minimum range stated in table 4-4.

2. For accidents involving propulsion units, it is not required to specify emergency withdrawal distances based upon the potential flight ranges of these items.

4-5.2. USE OF AVAILABLE COVER. Personnel engaged in fighting fires involving explosives and ammunition shall seek cover, when available, and never expose themselves unnecessarily to intense heat, flying fragments, or possible explosions.

4-5.3. APPROACHING FIRES. After the nature of the fire and the proper procedures for combating it have been determined, firefighting forces may approach a fire to extinguish it or to protect adjacent buildings. Where explosives are involved, this decision is contingent upon one or both of the following conditions: it must be known that a safe distance, a barricade, or a dividing wall of masonry or concrete separates burning non-explosive materials from high explosives; or, if a primary explosion has already

occurred, it must be known that only the heat of the burning wreckage menaces other buildings, regardless of their contents. When there is any doubt about the accuracy of information regarding a fire involving explosives, no effort shall be made to fight it and safe distances or shelter for personnel and equipment must be observed until the nature and condition of the fire are determined. Getting this information rapidly is particularly critical where fire follows an explosion and the lives of injured people trapped in buildings may depend on the rapidity with which the work of the firefighting forces is done.

4-5.4. USING HAZARD SYMBOL INFORMATION. Firefighting procedures shall be determined by the fire and/or chemical hazard symbol or symbols posted. These posted symbols shall be used as a guide for PPE requirements and/or firefighting methods. The type of material represented by each fire and chemical hazard symbol, the hazards each represents, and the firefighting procedures used to combat these hazards are summarized in tables table 4-1 and table 4-2. A card indicating the firefighting instructions appropriate to each symbol shall be carried in every fire truck and shall be readily available to firefighting personnel.

4-5.5. SPECIAL FIREFIGHTING PROCEDURES. The following paragraphs provide procedures for specific firefighting situations:

4-5.5.1. Grass or Brush Fires. When a grass or brush fire is discovered within a magazine area, the alarm shall be given immediately and the fire attacked at once if it is considered reasonable and safe to do so. Firefighting in grass or brush shall be conducted vigorously even though the fire may be immediately adjacent to or over a magazine. Local, state, or federal forest service officials should be consulted regarding the most dangerous period for forest and grass fires in the vicinity. During these periods, additional fire protective measures such as expanding the fire watch, securing extra equipment, and repairing or establishing firebreaks should be taken if necessary. See paragraph 4-1.10.5 for requirements concerning burning of vegetation.

4-5.5.2. Buildings or Open Magazines. When employees are in a building or open magazine and a fire occurs in or around the structure, the fire shall be reported immediately. Employees shall attempt to extinguish the fire using the firefighting equipment that is available in the building or magazine. If the fire involves explosive or toxic material, is immediately dangerous, or is so large that it cannot be extinguished with the equipment at hand, the employees shall vacate the magazine or building and seek safety.

4-5.5.3. Closed Magazines. When there is visible smoke or other evidence of a fire in a closed magazine, the magazine shall remain closed until the activity commanding officer or their designated representative arrives and decides whether to open the magazine.

4-5.5.4. Railroad Yards and Terminals. they are found in their early stages. If not, the fire should be fought only after an analysis of the hazard involved has been made. Every effort should be made to separate and promptly remove undamaged cars from yards where a fire has broken out.

4-5.5.5. Ships Carrying Explosives. Paragraphs 4-1.4 and 4-3.10.2 describe specific fire prevention and protection considerations that shall be followed prior to commencing loading or unloading operations. In addition to these preoperational requirements, shore activity personnel involved in the ship loading operation should be familiar with the type and location of the ship's fixed and portable firefighting equipment before they begin operations. Methods approved by the United States Navy and the United States Coast Guard will be used to combat fire aboard ship. Pre-established criteria should be developed for determining when to move ships, where the ship should be moved, and priorities for which ships to move first, in preparation for a fire aboard, or in the vicinity of a ship carrying ammunition or explosives. A pre-established competent authority should determine whether the fire can be

controlled or whether the vessel should be moved from the pier or wharf to an established anchorage that complies with the disaster plan. When deciding whether or not the vessel should be moved, consideration shall be given to the relative hazards involved. That is, whether the greatest danger will be to the pier and wharf and its surrounding facilities and inhabited areas if the ship remains, or to other ships and installations if the ship is moved.

CHAPTER 5
ELECTRICAL REQUIREMENTS

5-1. INTRODUCTION.

The electrical requirements of the National Electrical Code (NEC), National Fire Protection Association (NFPA) 70, as supplemented by the requirements of this chapter, are the minimum acceptable requirements for electrical equipment used or installed in hazardous (classified) locations or explosive areas at Navy and Marine Corps shore activities. Articles 500 through 504 of the NEC establish standards for the design and installation of electrical equipment in atmospheres that contain flammable vapors, liquids or gases, or combustible dusts, fibers, or flyings, and are adopted by the Navy for explosives areas. In case of a conflict between this document and the requirements of the NEC and/or NFPA 780, the requirements of this document take precedence.

NOTE

Sophisticated equipment at Research, Development, Test and Evaluation (RDT&E) facilities required for analysis, synthesis, formulation and processing of energetic materials is often not available in the proper explosion-proof rating required by the NEC. In such cases, the line management, the local safety office, and the commander of the RDT&E activity will coordinate and document appropriate policy.

5-2. HAZARDOUS (CLASSIFIED) LOCATIONS.

The term “hazardous (classified) locations” as used in this chapter is defined in the NEC, NFPA 70, Article 500. These locations are classified according to the hazard presented by electrical equipment installed in environments where flammable gases, or vapors, combustible dusts, or flyings may exist. Hazardous (classified) locations should not be confused with other types of classifications, such as explosive or chemical classifications (i.e., Hazard Class/Division 1.1). The requirements for electrical equipment and wiring for all voltages where fire or explosive hazards may exist are determined by the electrical hazard classification of the particular location. Each room, section, or area shall be considered individually in determining its classification. The presence of hazardous energetic material such as explosives, may or may not result in the presence or creation of a hazardous condition (combustible dust, flammable vapor or gas) with respect to electrical equipment or wiring. Unless exposed explosives or a hazardous atmosphere are present, explosives operating buildings, such as torpedo or missile assembly/ checkout buildings, mine assembly buildings and exterior renovation facilities, are not considered hazardous (classified) locations for the purpose of this chapter. Article 500 of the NEC divides hazardous locations into three classes. Each class is subdivided into two divisions according to the probability of the existence of explosive or ignitable concentrations. The following paragraphs provide general information and guidance in the classification of hazardous locations. The commanding officer of a facility or activity, or his designated representative, shall be responsible for the identification and classification of hazardous (classified) locations. A permanent record of these classifications shall be maintained at a centralized location.

5-2.1. CLASS I. Class I locations are those in which flammable gases or vapors are or may be present in the air in quantities sufficient to produce explosive or ignitable mixtures. Rooms or buildings

containing vapors from explosives which may condense shall be considered Class I, Division 1 locations. Electrical equipment is tested and listed by Underwriters Laboratories (UL) or Factory Mutual as suitable for installation and use in Class I hazardous locations with respect to safety of operation in the presence of flammable mixtures of specific vapors or gases with the air. Electrical equipment tested and listed by other recognized underwriting agencies (such as Canadian Standards Association (CSA)) may be used if the testing and certification is done to U.S. Standards. Equipment listed by other organizations that is not tested to U.S. Standards requires approval by Naval Ordnance Safety and Security Activity (NOSSA). An exception to these requirements is made for equipment made in foreign countries, which may be used in RDT&E Class I facilities without additional NOSSA approval, provided the following conditions are met:

a. That country's recognized underwriting agency has tested and listed the device [for example, the Canadian Standards Association (CSA) in Canada, or the Physikalisch-technische Bundesanstalt in Germany or the British Approvals Service for Electrical Equipment in Flammable Atmospheres (BASEEFA) in Britain],

b. Local peer review by line management and/or New Materials Review Committee (NMRC) and/or Process Review Committee (PRC) approves the device for the specific application, and

c. A Standard Operating Procedure (SOP) and any necessary supplemental documentation are written and approved for the specific application.

1-1.1.1. Class I, Division 1. Class I, Division 1 locations are those in which:

d. Hazardous concentrations of flammable gases or vapors exist continuously, intermittently, or periodically under normal operating conditions.

e. Hazardous concentrations of flammable gases or vapors may exist frequently because of repair or maintenance operations or because of leakage.

f. Breakdown or faulty operation of equipment or processes might release hazardous concentrations of flammable gases or vapors and may also cause simultaneous failure of electrical equipment.

g. Explosives may sublime and outgas.

5-2.1.2. Class I, Division 2. Class I, Division 2 locations are those in which:

a. Volatile flammable liquids or flammable gases are handled, processed, or used, but in which the hazardous liquids, vapors or gases are normally confined within closed containers or systems which can escape only in case of accidental rupture or breakdown of such containers or systems or in case of abnormal operation of equipment.

b. Hazardous concentrations of gases or vapors are normally prevented from accumulating by positive mechanical ventilation, but in which concentrations might become hazardous through the failure or abnormal operation of the ventilating equipment.

c. Hazardous concentrations of gases or vapors occasionally might accumulate if they spread from adjacent Class I, Division 1 locations unless such concentrations are prevented by adequate positive-pressure ventilation from a source of clean air, and effective safeguards against ventilation failure are

provided. Article 501 of the NEC describes the requirements for installation of electrical equipment in Class I locations.

5-2.2. CLASS II. Class II locations are those locations which are hazardous because of the presence of combustible dust. Rooms or buildings that contain explosive dusts or explosives having a chemical composition or physical size, such that through movement, handling, or other means, particles of explosives may become disassociated from the whole and become dispersed in the surrounding atmosphere, shall be considered Class II hazardous locations. Equipment installed in Class II locations shall be able to function at full rating without developing surface temperatures high enough to cause excessive dehydration or gradual carbonization of any organic dust deposits that may be present. Dust that is carbonized or excessively dry is highly susceptible to spontaneous ignition. Operating temperatures of electrical equipment shall not exceed 165 degrees Centigrade (°C) [(329 degrees Fahrenheit (°F)] for equipment which is not subject to overloading, and 120°C (248°F) for equipment, such as motors, power transformers, etc., that may be overloaded. Equipment and wiring defined as explosion-proof is not required in Class II locations, and may not be acceptable unless they meet all the requirements of Article 502 of the NEC for Class II locations.

5-2.2.1. Class II, Division 1. Class II, Division 1 locations are those in which:

a. Combustible dust may be suspended in the air continuously, intermittently, or periodically under normal operating conditions in quantities sufficient to produce an explosion or ignition.

b. Mechanical failure or abnormal operation of machinery or equipment may cause explosive or ignitable mixtures to be produced, or may provide a source of ignition through simultaneous failure of electrical equipment, operation of protection devices, or other causes.

c. Combustible dusts that are electrically conductive may be present.

d. Explosives or explosive dusts may, during handling, produce dust capable of being dispersed in the atmosphere.

5-2.2.2. Class II, Division 2. Class II, Division 2 locations are those in which:

a. Combustible dust will not normally be suspended in the air, or will not likely be thrown into suspension, by the normal operation of equipment or apparatus in quantities sufficient to produce explosive or ignitable mixtures.

b. Deposits or accumulations of dust may be sufficient to interfere with the safe dissipation of heat from electrical equipment or apparatus.

c. Deposits or accumulations of combustible dust on, in, or in the vicinity of, electrical equipment may be ignited by arcs, sparks, or burning material from electrical equipment.

5-2.3. CLASS III. Class III locations are those that could be hazardous because of the presence of easily ignitable fibers or flyings, but where these fibers or flyings are not likely to be in suspension in the air in quantities sufficient to produce ignitable mixtures. These locations include combustible fiber manufacturing and pressing plants, woodworking plants, and establishments involving similar

hazardous processes or conditions. Easily ignitable fibers and flyings include rayon, cotton, hemp, oakum, excelsior, and other materials of similar nature.

5-2.3.1. Class III, Division 1. Class III, Division 1 locations are those in which easily ignitable fibers or materials that produce combustible flyings are handled, manufactured, or used.

5-2.3.2. Class III, Division 2. Class III, Division 2 locations are those in which easily ignitable fibers are stored or handled, excluding locations where ignitable fibers are stored or handled during manufacturing. Article 503 of the NEC describes the requirements of installation of electrical equipment in Class III locations.

5-2.4. CHANGE OF CLASSIFICATION. Operating buildings and magazines are constructed to perform a specific function, which dictates the requirements for electrical equipment installation. If the functions performed in the facility change or are rearranged, the Explosives Safety Officer must inspect, approve, or reclassify the hazardous locations. Multiple classifications are discussed in the following paragraph. Any changes shall be noted in the centralized classification file discussed in paragraph 5-2.

5-2.5. MULTIPLE CLASSIFICATIONS. In some areas of operating buildings or magazines there may be hazards resulting from both dusts and flammable vapors. In these cases, it is necessary for that area to have a dual, or multiple, classification. Electrical equipment used in these areas must be listed by UL or other recognized testing laboratory as suitable for use for all hazardous locations to which it will be subjected.

5-3. STATIC ELECTRICITY.

The treatment of static electricity shall comply with the following specifications.

5-3.1. GENERAL. Static electricity is produced when two unlike materials are brought into contact and then separated. When in contact, there is a redistribution of charge across the area of contact and an attractive force is established. When the materials are separated, work is done in overcoming these attractive forces. This work is stored as an electrostatic field, which is set up between the two surfaces when they are separated. If no conducting path is available to allow the charges to bleed off the surfaces, the voltage difference between the surfaces can easily reach several thousand volts as they are separated.

5-3.2. SOURCES OF STATIC ELECTRICITY. For static electricity to develop and accumulate there must be a nonconductive material; that is, an insulator or an insulated conductor present. In addition, there must be some form of contact and separation between materials. Some common sources of static electricity include:

a. Steam, air, or gas flowing from any opening in a hose or pipe, particularly when the stream is wet or when the air or gas stream contains particulate matter;

b. Materials that are mixed, poured, flowed, or rolled through pipes, chutes, passages, or air;

c. Nonconductive power or conveyor belts in motion;

d. Moving vehicles;

e. All motion involving changes in relative position of contacting surfaces (usually of dissimilar substances), of which one or both must be a poor conductor of electricity;

f. Ungrounded personnel.

5-3.3. HAZARDS. Static electricity is not a hazard in itself. The generation of static electricity cannot be prevented entirely. The hazard arises when an accumulated electrical charge is subsequently discharged as a spark in the presence of hazardous atmospheres, dusts, or exposed explosives. This spark is also a potential ignition source for flammable or explosive materials and electroexplosive devices (EED). In order for static electricity to be a source of ignition, four conditions must exist:

a. There must be an effective means of static electricity generation.

b. There must be a means of accumulating the separate charges and maintaining a suitable difference of electrical potential.

c. There must be a spark discharge of adequate energy.

d. The spark must occur in an ignitable mixture.

5-3.3.1. Hazards to Exposed Materials. The sensitivity of various energetic materials that are used in preparing ammunition, and the many sources of static electric charges in or near explosives operations, may combine to create a serious hazard. Failure to take all appropriate precautions to avoid the accumulation of charges of static electricity or to safely dissipate them may result in disaster. A hazard results when charges accumulate to the extent that a spark discharge occurs in the presence of hazardous atmospheres, dusts, or exposed sensitive explosives. Elimination of potential hazards requires proper grounding or neutralization of the charges to avoid dangerous accumulations.

5-3.3.2. Hazards to Unexposed Materials. Static electricity is not considered a substantial hazard during the handling of most bulk explosives if the explosives are in approved containers. It also is not considered a hazard near explosives totally contained and unexposed within loaded ammunition items. However, static electricity is considered a substantial hazard when dust or flammable vapors are present on the exposed surfaces of the containers or in the surrounding atmosphere. Because dust or flammable vapors may accumulate, even materials not recognized as normally susceptible to the hazards of static electricity shall be stored and maintained clean and free of foreign substances. In addition, periodic inspections shall be made to ensure that there is no deterioration or leakage of containers, which may lead to exposure of explosives. The presence of any unusual or abnormal odors around ammunition shall be investigated. Items with exposed leads or equivalent conductive paths to EEDs which are not electrically out-of-line may not be considered an unexposed hazard unless electrostatic discharge (ESD) tests have been conducted and it was concluded that the explosive materials, in that specific configuration, are not sensitive to the ESD threat. Containers or casings for rocket motors, warheads, etc., where charge pockets can exist and there is no electromagnetic shielding between the external surface and the explosives material may require special static electricity precautions such as detailed in paragraph 5-3.4 even though the explosives material is totally contained in the item.

5-3.4. MATERIALS SENSITIVE TO STATIC SPARK DISCHARGE. Practically all finely divided combustible materials, especially explosives, when they are suspended in the proper concentration in air or deposited in finely divided layers, can be ignited by an electrostatic spark. Solvents or other

volatile chemicals may also exist in concentrations that could be ignited by an ESD. These items, along with EEDs, are discussed in more detail in the following paragraphs.

5-3.4.1. Explosives. Explosives or explosive mixtures that are sensitive to static discharge are usually primary explosives and incendiary or pyrotechnic mixtures. These explosives and mixtures are used in primers, initiators, detonators, tracers, and destructors.

5-3.4.2. Volatile Chemicals. Flammable or explosive concentrations of volatile chemicals in air can be ignited by the static charges that may be accumulated and stored on a human body. Typical sources of flammable vapors are fuels, ethyl ether, ethyl alcohol, ethyl acetate, acetone, benzene and naphtha, and outgases from explosive mixtures.

5-3.4.3. Electroexplosive Devices (EED). Static electricity on insulated conductive objects such as metal stands with rubber casters, or static electricity on a person, can discharge through the air to other objects that are at sufficiently different potentials. Such a discharge or spark, even though it may be too small to be felt, may contain enough energy to cause an EED, such as a primer or a detonator, to fire. Static discharges may also be strong enough to break down the insulation within the EED and cause it to fire. Refer to NAVORD OD 10773. Static electricity (ESD) test results may be available for EEDs from the Navy ESD Technical Agents at Naval Surface Warfare Center Indian Head Division (NSWC IHD).

5-3.4.4. Energetic Materials. Energetic materials are sensitive to ESD in varying degrees depending on the type of energetic material (primary, booster, pyrotechnic, etc.). Small-scale sensitivity test data for ESD as required by AOP-7 is also available. Design agents may have ESD sensitivity information for the items they produce. Also see paragraphs F-10.7.1 through F-10.7.3.

5-3.5. DISSIPATION OF STATIC ELECTRICITY. There are several methods for eliminating or reducing the hazard from static electricity. However, there is no proven method for the complete elimination of static electricity.

5-3.5.1. Grounding and Bonding. This fundamental method provides an electrically continuous path to ground to allow the charges to dissipate as fast as they are generated. When all of the objects are conductive, they can be grounded by electrically connecting all parts to a common ground conductor. If the objects contain insulating parts, these insulating parts may be replaced with conductive parts. If the insulating parts are not replaced, an electrical path shall be provided over the insulating parts to ground. When deemed necessary (which is usually evident by a ground strap installed in the shipping container), effective grounding must include the exterior and the contents of a container.

5-3.5.2. Humidification. Static electricity and subsequent discharges are usually prevented if the relative humidity is above 60%. Where humidification techniques are used to prevent static electricity accumulations, a daily pre-operational check of the humidity levels shall be accomplished. However, certain materials such as metallic powders, pyrotechnic mixtures, and some explosives cannot be exposed to air with 50% or more relative humidity. Under these conditions, spontaneous ignition or deterioration can occur. It has been shown that relative humidity levels as low as 40% can still provide some relief from static discharges. If the material being protected cannot tolerate relative humidity above 40%, some other means of static discharge protection must be provided. Humidification as a sole means of static control shall not be used unless approved by NOSSA.

5-3.5.3. Ionization. Ionization can serve as an effective method of removing static charges from certain processes and/or operations. Ionization methods work by making the air sufficiently conductive to dissipate static charges. Methods of application can be found in NFPA Recommended Practice 77,

"Static Electricity". This method of removing static charges must not be used in hazardous (classified) locations. Some ionizers use radioactive ionization sources and, as a result, there is the potential for radioactive material contamination in case of an explosives accident or pyrotechnic fire. These types shall not be used unless approved by NOSSA.

5-4. LIGHTNING PROTECTION GROUNDING SYSTEM.

The lightning protection grounding system is designed to provide earth termination for the lightning protection systems down conductors. The lightning protection grounding system consists of ground rods and buried uninsulated copper cable interconnecting the rods. Depending on the type of lightning protection system used, the buried lightning protection grounding system may be the secondary ground girdle (as when installing an integral lightning protection system) or a separate grounding system provided specifically for free standing masts or a catenary system. The cable shall not be less than AWG No. 1/0 with strands not less than AWG No. 17. The depth of burial should be at least 30 inches although local codes may dictate greater depths. The girdle should be installed at least two feet outside of the drip line of the exterior of the building or a minimum of three feet beyond the exterior wall of the building. This will assure wetting of the girdle during rain and not be obstructed by the building footings. If a secondary grounding system (see paragraph 5-5) is already present, and a free standing or catenary mast system is to be used which requires the use of a separate lightning protection ground loop conductor referred, then the new conductor shall be located at least three feet outside of the secondary ground girdle. Structures and areas protected by a single mast or facilities with areas of 500 square feet or less do not need a lightning protection ground girdle.

5-4.1. RESISTANCE OF SYSTEM. The resistance from all air termination systems and down conductors to the lightning protection grounding system shall be less than one ohm. The resistance to earth of the lightning protection grounding system shall be 25 ohms or less. If not, steps need to be taken until these levels of resistance are met. Additional, deeper ground rods or any other approved method may be used to achieve this reading. At locations where achieving 25 ohms or less is not feasible through the installation of additional ground rods or a ground loop conductor, any of the alternatives described below are acceptable. Advise NOSSA of the inability to meet the 25 ohm requirement and what steps have been taken to make the earth resistance as low as possible. Institute of Electrical and Electronics Engineers (IEEE) Standard 142 "Grounding of Industrial and Commercial Power Systems (The Green Book) provides information for reducing the earth resistance of grounding systems.

5-4.1.1. Ground Rods. Ground rods shall be:

a. A minimum of 3/4-inches in diameter;

b. Copper or copper-clad steel only;

c. A minimum of 8 feet long;

d. A minimum of 10 feet in the ground;

e. A minimum of 2 feet below grade unless in a test well. If in a test well, a longer rod shall be used to provide access in the test well and meet the 10-foot requirement.

An exception to the above may be made for ground rods for metal Ready Service Lockers (RSL), which may extend aboveground for the cable connection to the RSL. Any aboveground rods should be clearly marked to prevent a trip hazard.

5-4.1.2. Rocky Areas. For conditions that are rocky such as rock face or rock mountains, adequate protection can be achieved by installing an extensive wire network around the structure. Connect the facilities down conductors to this network and bury, if there is enough soil available. The resistance to earth at some distant point of such a network will be high, but the potential distribution about the structure will be as though it were resting on conducting soil. Documentation must be on file at this facility or maintenance agency at all times. See MIL-HDBK-419 for installation guidance.

5-4.1.3. Grounding Alternatives. If neither of the two above alternatives is possible or achievable, conduct tests to establish the actual soil resistivity of the earth surrounding the facility. Consult table 5-1 for the maximum acceptable resistance of the installed lightning protection system to ground.

5-4.2. BONDING OF ELECTRODES. All grounding electrodes and ground terminals, including those used for lightning and static protection, electrical service, telephone and antenna systems, as well as underground metallic piping and the metal frame of the building shall be bonded together through the secondary grounding system. This bonding connection may be by high compression clamps or exothermic welds (preferred for all permanent bonds). Bolted connections are preferred for the ordnance ground connection to the secondary in a test well. All bonded connections must meet the bonding resistance requirement of one ohm or less from paragraph 5-4.1.

Table 5-1. Maximum Acceptable Resistance to Ground

Actual Earth-Resistivity (ohm-cm)	Required LPS Resistance (ohms)
20,000 - 30,000	35
30,001 - 40,000	45
40,001 - 50,000	55
50,001 - 60,000	70
60,001 - 70,000	80
70,001 - 80,000	90
80,001 - 90,000	100
90,001 - 100,000	115

NOTES:

1. Measure the resistivity of the earth surrounding the facility with a fall-of-potential meter. Take the average of at least three (3) different readings from 3 different locations.

2. Using this average reading and table 5-1, determine the maximum acceptable value of the lightning protection system. If this value cannot be met, refer to paragraph 5-4.1.

3. The values in table 5-1 were derived from formula for a single ground rod corrected for four rods in a square contained in IEEE Standard 142. A simplified formula is as follows:

$$R(ohms) = \frac{[earth\ resistivity\ (ohm - cm)\%\ 0.34]}{302}$$

5-5. SECONDARY GROUNDING SYSTEM.

The secondary grounding system provides a common ground with all other grounds (except the primary lightning protection ground) that may exist in or around an ordnance facility. The girdle shall consist of a continuous loop of buried AWG No. 1/0 or larger copper or copper clad steel cable buried no closer than 3 feet from the outside wall of a structure. The depth of this cable shall be as required by local ordinances, but should be at least 30 inches. The secondary grounding system is composed of a girdle with the grounding subsystems listed below that may be present. Note that all of the grounding subsystems may not be present at each facility. The secondary grounding system provides a minimum of protection from the effects of lightning (required for all ordnance handling, operating, and storage facilities or areas, except as noted in paragraph 1-1.1) by providing a common grounding point for any item in the structure that requires grounding. All grounds must be interconnected with the secondary ground girdle Testing of the secondary grounding system is detailed in paragraph 5-8. Some specific details on testing are provided in applicable sections. In addition to the lightning protection grounding system discussed in paragraph 5-4, the types of grounds discussed in the following paragraphs may be provided for an ordnance facility and must be bonded to the secondary ground girdle. These grounds shall be tested during new construction, prior to the first use, after repair, and at the regular 24 month test interval. On new primary or secondary ground girdles, measurements of the resistance to earth shall be made every month for the first year. Records shall be kept for a minimum of six test cycles. No painting or other coating is allowed on any ground conductors above or below ground.

5-5.1. POWER SYSTEM GROUND. The NFPA 70 (National Electrical Code (NEC) requires that the electrical power systems and equipment be intentionally grounded. The intentional grounding of electrical power systems provides a path for fault currents and provides a 0-volt reference for electrical equipment and surge suppression circuitry. This ground must also be permanent and continuous, have ample capacity to conduct safely any currents liable to be imposed on it, and shall be of the lowest practical impedance. Refer to NFPA 70 for specific requirements for the installation of this ground. In general, there are two parts of the power system ground: The equipment ground and the wiring system ground.

a. The maximum resistance between the power service ground and the secondary ground girdle is 1 ohm. The interconnection between the power service ground and the secondary ground must be tested every 24 months.

b. The maximum resistance to ground of the power service ground must be 25 ohms or less, measured by the three-point fall-of-potential technique before interconnection to the secondary ground girdle. This test must be conducted during new construction or when replacing transformers.

NOTE

Compliance with NEC 250.50 will be achieved by bonding all available earth electrodes to the secondary ground girdle. A facility's single point ground or main ground bus cannot be used to create ground loops.

5-5.1.1. Equipment Ground. Equipment grounding relates to the manner in which nonelectrical conductive material, which either encloses energized conductors or is adjacent thereto, is to be interconnected and grounded. The basic objectives of this ground are:

a. To provide freedom from dangerous electric-shock-voltage exposure to persons in the area;

b. To provide adequate current-carrying capability, both in magnitude and duration, to accept the ground-fault current permitted by the overcurrent protection system without creating a fire or explosive hazard to building or contents;

c. To contribute to superior performance of the electrical system. Basically, this means that the grounding conductor must return the ground-fault current without introducing enough additional impedance that would impair the operating performance of the over current protection system.

5-5.1.2. Wiring System Ground. This consists of grounding one of the wires of the electrical system to the electrical panel buss. This buss is connected to the power system ground rod (as required by the NEC) which is then connected to the secondary girdle (usually the neutral, depending upon the type of system), and if necessary, adding a safety ground wire to the system to limit the voltage on the circuit which might otherwise occur through exposure to lightning or other voltages higher than the design of the circuit. Another purpose would be to limit the maximum voltage allowed to ground under normal operating conditions. A system, which operates with one of its conductors intentionally grounded, will provide automatic opening of the circuit if an accidental or fault ground current occurs on an ungrounded conductor. Permanently installed transformers with a derived neutral must also include a neutral ground bond per NFPA 70 Article 250.30.

5-5.2. INSTRUMENTATION GROUND. The purpose of the instrumentation ground is to provide error free operation of sensitive electronic equipment; for example, computers or measuring devices. These

grounds are designed to minimize the introduction of spurious signals or noise onto data lines. Electrical distribution systems, lighting, motors, and even adjacent instrumentation frequently generate noise. The noise is frequently generated by electrical distribution systems, lighting, motors, and even adjacent instrumentation. Many, if not most, data instrumentation systems are concerned with the measurement or detection of physical phenomena (or changes in them) that require periods of observation or measurement that range from a few milliseconds to several minutes or longer. Additionally, the signal levels are usually quite low. Normally power is supplied to these systems through isolation transformers. They are commonly required to be isolated from all other grounds to eliminate ground loops that may generate common mode voltages, but must be grounded at a single point on the secondary ground girdle. MIL-HDBK-419, Volume II, section 3.5.2 discusses the various methods for instrumentation grounds. If the manufacturer of the test equipment requires an instrument ground, then the manufacturer's procedures for its installation shall be followed. However, this ground must be isolated from all other grounds and bonded directly to the secondary-grounding girdle. Tests shall be performed to measure the resistance to the secondary ground girdle, which shall be one ohm or less.

5-5.3. STATIC GROUNDS. The purpose of the static ground system is to provide a conductive path to dissipate any static charges that may be generated. Paragraph 5-3.2 discusses the sources of electrostatic voltages. Examples of static ground devices are conductive floors, conductive table tops, conductive shoes, leg stats, wrist straps, and grab bars. The static ground system may be connected to structural steel (unless the structural steel is used as the lightning down connector), ground cones, buried copper plates, and rods driven into the earth. All of these items must be interconnected with the secondary ground girdle. However, static ground systems shall not be connected directly to gas, steam, or air lines (as these are static-producing items), dry sprinkler system piping, or lightning down conductors. Other static producing items must be bonded directly to ground stub-up or secondary ground girdle connection point and should not flow through static grounding systems or other designated grounding paths.

5-5.3.1. Conductive Floors. Conductive floors are mandatory (unless it is practical to use wrist straps for personnel grounding) in areas where personnel work with or are exposed to contact with the materials listed in paragraph 5-3.4 or other materials known to be static sensitive. When working on a weapon system that requires personnel grounding and conductive floors are used, conductive shoes or leg stats as described in paragraphs 5-5.3.2 and 5-5.3.3 shall be worn.

NOTE

It is only necessary to install the conductive floor where the operation is performed and not necessarily throughout the facility.

5-5.3.1.1. Specifications. Conductive floors shall be non-sparking material such as conductive rubber, plastic conductive masonry material, or conductive composition material. Floors must comply with the following requirements:

a. The surface of the floor must be free from cracks and must be reasonably smooth. The surface material must not slough off, wrinkle, or buckle under normal conditions of use. Conductive tiles are not recommended for use in areas where contamination can be caused by explosives dust. The large number of joints and the tendency of tiles to loosen provide areas where explosives dust can become lodged and which are not easy to clean under normal cleanup procedures.

b. The conductive floors must be compatible with the materials being processed.

c. Conductive floors shall be bonded to the secondary ground girdle.

⚠ WARNING

There is risk of electric shock when wearing conductive shoes and operating electrical equipment. To mitigate this risk, conductive floors and shoes must have an average and minimum resistance. When testing the resistance of conductive floors, the minimum resistance may include the resistance of the shoes used. See paragraph 5-5.3.2.3.

d. The average resistance of the conductive floor shall be 1,000,000 ohms or less as measured by the methods described in c, below. The minimum average resistance of the floor shall be 5,000 ohms in areas with 120-volt service, 10,000 ohms for 120/240 or 208Y/120-volt service etc., as measured by the same technique.

5-5.3.1.2. Test Requirements. Conductive floors shall be tested at the time of installation and at least every 24 months thereafter. In areas exposed to large variations in relative humidity, additional measurements should be made during times of lowest and highest relative humidity to ensure adequate floor conductivity. It is suggested that consideration be given to reducing the frequency of the testing to every seven months (or possibly more often in particularly dirty or dusty areas) for those areas where there is a good deal of traffic on the floor or when conductive shoes are worn outside the structure. The results of these tests shall be maintained on file for at least six inspection cycles. It is recommended that test records be maintained for longer periods to provide better databases for trend analysis.

⚠ WARNING

Instruments for testing the conductivity of floors shall be used inside the room only if it is free of exposed explosives and no exposed EEDs are present. Otherwise, the test instrument shall be placed outside the room. In any case, the floor in the immediate area of the electrode contact shall be thoroughly cleaned of all explosive material, and the air shall be purged of explosive dust or flammable vapors.

5-5.3.1.3. Test Methods.

a. It is recommended that a sketch of the facility showing electrode locations for both the electrode-to-electrode and electrode-to-ground measurements be included in the grounding system test plan, just as is done for the resistance-to-ground and bonding resistance test points. Such a sketch will ensure that the measurements are made in the same area of the floor from year to year so the data can be compared to determine trends. Figure 5-1 illustrates a typical sketch which can be developed for the conductive floor testing.

b. The floor shall be clean and dry and the room shall be free of flammable gas mixtures or explosive dusts.

c. Each electrode shall weigh 5 pounds and shall have a dry, flat, circular contact area 2½ inches in diameter. The contact area shall have a surface of aluminum or tin foil that is 0.0005 to 0.001-inch

thick and is backed by a layer of rubber ¼-inch thick. The surface shall measure between 40- and 60-durometer hardness as determined by a Shore Type A Durometer (ASTM D2240).

d. Resistance shall be measured with a suitably calibrated ohmmeter. The ohmmeter shall operate on a nominal open-circuit output voltage of 500 Volts direct current (Vdc), a short-circuits current not to exceed 5 milliampere (MA).

e. Surface resistance test kit may be used in place of equipment specified by paragraphs 5-5.3.1.3.c and 5-5.3.1.3.d provided the equipment collectively (i.e., meter and electrodes) comply with ANSI/ESD STM7.1.

f. To ensure that the measurements are not biased by the proximity of the electrode(s) to a grounded item, the electrodes for both the electrode-to-electrode and electrode-to-ground measurements must be located a minimum of three feet away from a grounded item such as a door frame, grounded ordnance handling equipment, or any grounded item resting on a conductive floor. Both electrode-to-electrode and electrode-to-ground measurements shall be made at five or more locations in each room and the results shall be averaged. For compliance with the requirements of paragraph 5-5.3, the average result shall be below the limits specified, and no value shall be greater than 5 megohms. All readings shall be taken with the electrode or electrodes more than 3 feet from any ground connection or from a grounded object that is resting on the floor. If the resistance changes appreciably with time during a measurement, the value observed after the voltage has been applied for 5 seconds shall be considered to be the measured value. It is recommended that a minimum of two ground reference points be used when conducting electrode-to-ground measurements. It is acceptable to use a single reference point for any case where it can be ensured that the reference point has a very low resistance connection to the secondary ground girdle.

NOTE

The above requirement is written around large conductive floors installed in production buildings, or the equivalent. It may not be practical to conduct five surface resistance (electrode-to-electrode) and/or resistance-to-ground measurements in a small test cell and still remain three feet away from all grounded items. In such cases, enough tests should be conducted to ensure that all parts of the conductive floor are tested. The justification for conducting less than the required number of electrode-to-electrode or electrode-to-ground measurements should be documented in the grounding system test plan.

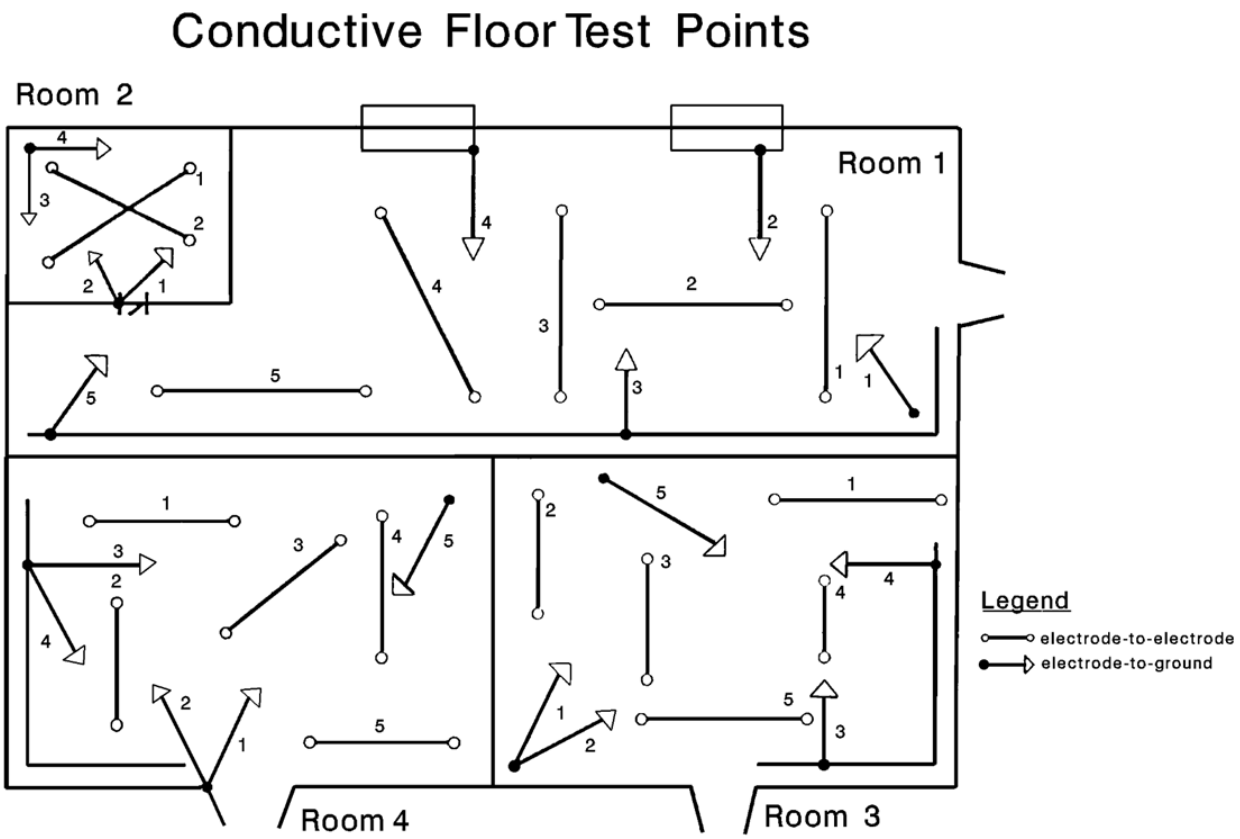

Figure 5-1. Example of Conductive Floor Electrode Locations

5-5.3.1.4. Ordnance Shade Structures. Ordnance shade structures must be specifically approved by NOSSA through the site approval process for use as ordnance storage, assembly, or operations areas. These structures exist in two basic designs: metal roofed and fabric roofed. Metal roof structures must meet the basic bonding and grounding requirements of paragraph 5-4.2. Fabrics used for shade structure covers must meet the specifications and test requirements identified below. Shade structures must be protected by a mast or catenary lightning protection system. These structures must use metal supporting framework that is bonded to a grounding system. An exception is shade structures used on airfields for loading/unloading ordnance operations on aircraft. These structures do not need lightning protection system, but must have an aircraft ground point under each shade structure, and the aircraft must be grounded during loading/unloading operations. These shade structures are not to be used for storage, assembly, or other ordnance operations.

NOTE

Ordnance shade structures must be evaluated and approved in writing by NOSSA prior to procurement.

5-5.3.1.4.1 Ordnance covers must be specifically approved by NOSSA for use on ordnance items during assembly, buildup, or staging of ordnance items. These covers are typically fabric covers to

provide weather protection to ordnance items in staging areas. The fabrics used for these covers must meet the specifications and test requirements identified in paragraphs 5-5.3.1.4.2 and 5-5.3.1.4.3.

NOTE

Ordnance covers must be evaluated and approved in writing by NOSSA prior to procurement.

5-5.3.1.4.2 Specifications. The static dissipative properties of the fabric material used for covers and structures shall not be met by use of topically applied treatment; that is, sprayed on the fabric. The fabric's static dissipative properties must remain stable with long term UV exposure and under varying humidity conditions. If the shade structure fabric consists of multiple layers, the layers must be electrically integrated such that the surface resistivity measured with one probe on the outside of the fabric, and the second on the inside of the fabric, will yield the same results as if both were on the outside of the fabric material.

⚠ WARNING

Instruments for testing the conductivity of shade structures shall be used under the shade structure only if it is free of exposed explosives and no exposed EEDs are present. In any case, the shade fabric and metal structure in the immediate area of the electrode contact shall be thoroughly cleaned of all explosive material.

5-5.3.1.4.3 Test Requirements. Shade structures shall be tested at the time of installation and at least every 24 months thereafter. Covers shall be exposed to external ambient humidity conditions for a minimum of 24 hours prior to testing. However, the shade structures and covers shall not be tested when wet from rain or dew. In areas that experience large variations in relative humidity, additional measurements should be made during times of lowest and highest relative humidity to ensure adequate conductivity. Additional testing for shade structures may be required at reduced intervals during the first 24 month cycle. The results of these tests shall be maintained on file for at least six inspection cycles. It is recommended that test records be maintained for longer periods to provide better databases for trend analysis. Ordnance covers must be tested prior to first use as a minimum. Test plans for shade structures should include: resistance to earth measurements, bond test to the metal structure, fabric to grounded member measurements, and fabric to fabric measurements. Test plans for covers should include fabric to fabric measurements. Contact NOSSA for guidance in developing test plans for shade structures and ordnance covers.

NOTE

To provide electrical safety for the ordnance and ordnance operations, and to prevent static buildup in the materials, regular testing will be necessary. Typically the surface resistivity should be below 1 Megaohm for the material to provide the necessary protection for ordnance.

5-5.3.2. Conductive Shoes. Conductive safety shoes described in paragraph 2-4.7.5.1 or other devices (such as leg stats) that provide similar protection, are required where conductive floors are installed (unless wrist straps are worn) or where required by local SOPs. The Navy shall furnish

conductive shoes and shall also maintain custody and control of them. See paragraph 5-5.3.1 on the use of conductive floors. Personnel from other areas and visitors who enter an area where explosives are exposed shall wear conductive shoes or other approved devices such as leg stats, grounding clips, conductive sandals, and similar devices as appropriate.

⚠ WARNING

Personnel required to work on electrical equipment in areas where conductive floors are installed shall not wear conductive shoes.

5-5.3.2.1. Care and Use of Conductive Shoes. Conductive shoes may lose their effectiveness if worn under all conditions. Oil and dirt decreases the conductivity of the shoes. Therefore, conductive shoes should be worn only in specifically designated areas or under favorable weather conditions when traveling between areas. When conductive shoes are required, only lightweight socks with high cotton content shall be worn. Pads, inner soles, and arch supports are not permitted unless they are completely enveloped in conductive plastics or unless they are all metal. When conductive shoes are not in use, they should be stored in lockers in the change house of the area where they are used. Refer to paragraphs 5-5.3.2.2 and 5-5.3.2.3 for the testing of conductive shoes. Conductive shoes shall not be repaired.

5-5.3.2.2. Test Requirements. Tests of conductive shoes shall be made when issued and then as often as necessary to ensure that the resistance of the shoes is within the required limits. However, tests shall be conducted at least once every 3 months. Conductive shoes worn in operations involving initiating or primary explosives, EEDs, and sensitive pyrotechnic mixtures shall be tested at the beginning of the shift each day. Shoes failing tests will be replaced immediately. When more than an occasional pair of shoes is found to be deficient in conductivity, more frequent testing is needed, and shall be scheduled. Grounding clips, conductive sandals, leg stats, or conductive shoe covers require the same testing as conductive shoes.

5-5.3.2.3. Test Methods. Tests of conductive shoes on individuals for use in required locations shall be made initially and regularly thereafter to ensure that the resistance from person to ground through conductive flooring is less than 1,000,000 ohms, in accordance with the American Society of Testing and Materials (ASTM) Standard F2412-05. The testing instrument may be similar to the ones shown in figure 5-2. The two electrodes should consist of conductive plates arranged so that the employee stands with one foot on each plate to complete the circuit. The test voltage shall be nominally 500 volts. The short-circuit current across the electrodes or plates shall not exceed 2.0 mA. However, 0.2 mA is more desirable. The effective internal resistance of the test equipment shall be no less than 100,000 ohms ±10%. Positive safeguards shall be incorporated into the design of the instruments to eliminate the chance of electric shock to the person wearing the shoes being tested. Tests shall not be performed in rooms where exposed explosives are present. Shoes shall be tested first without cleaning the soles and heels and if the resistance does not exceed required limits, the shoes may be put into service. If resistance exceeds 500,000 ohms per shoe when they are tested in accordance with figure 5-3, the shoes shall be cleaned and retested. If readings are then sufficiently low, the shoes may be returned to service. Those with an excessive reading shall not be used as conductive shoes. Sandpaper, solvents, or other agents affecting the structure or conductivity of the sole materials shall be avoided. Separation or removal of the conductive sock liner from the conductive plug or depression of the conductive plugs below the surface of the insole of the shoe may cause high resistance. Nonconductive stockings such as silk or wool or foot powders shall be avoided.

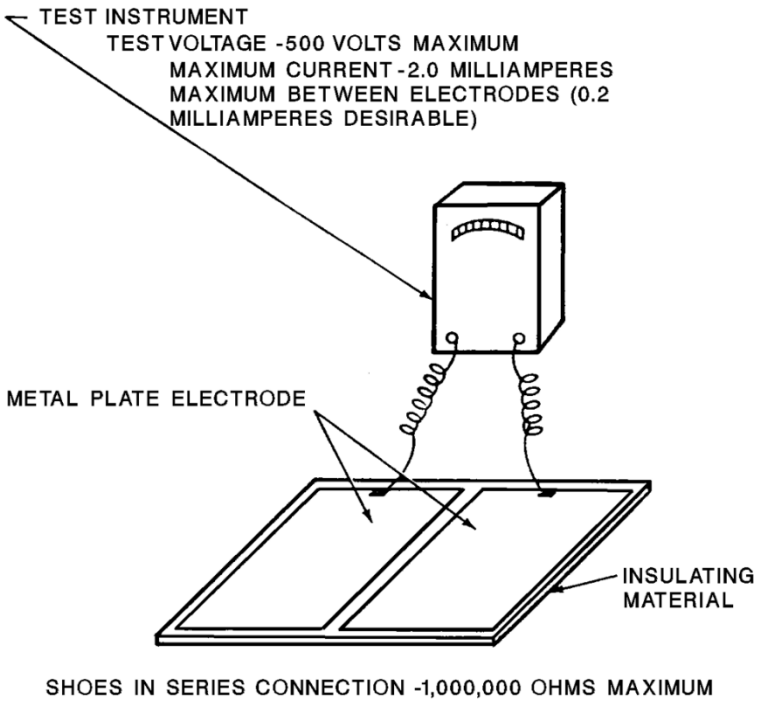

Figure 5-2. Testing Shoes On Wearer

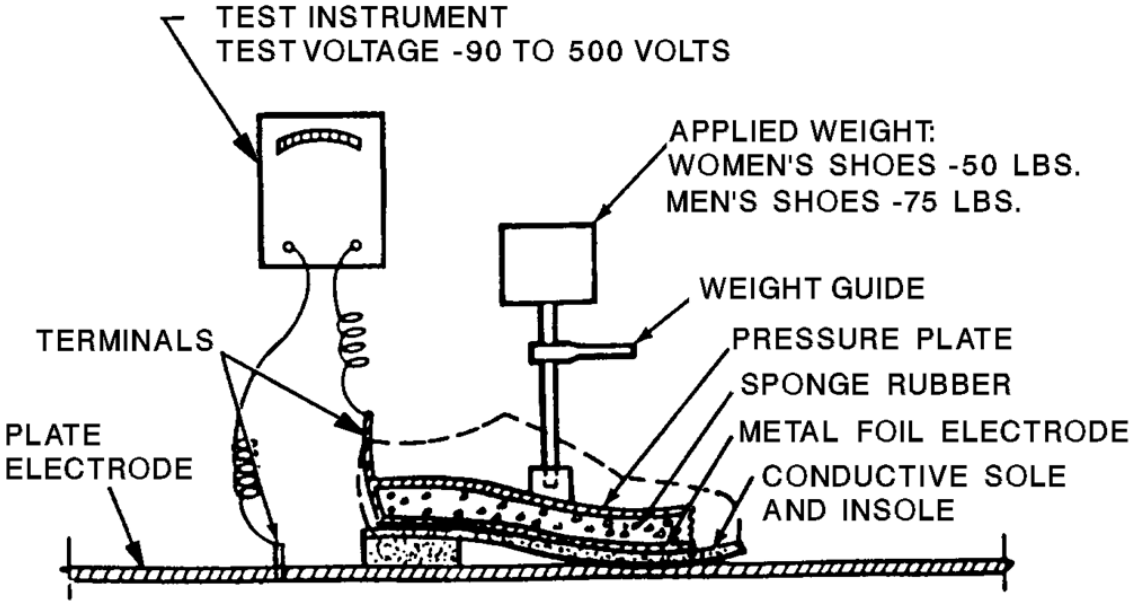

Figure 5-3. Testing Shoes Off of Wearer

5-5.3.2.4. Test Records. A test log shall be maintained for the preceding twelve months. The following information shall be recorded for each pair of shoes tested:

a. Name of employee wearing the shoes.

b. The resistance reading; acceptable or unacceptable is sufficient if the meter does not indicate actual resistance.

c. The date the test was conducted.

d. Initials of the person conducting the test.

5-5.3.3. Leg Stats. Leg stats may be used in conjunction with conductive floors in lieu of conductive shoes. The resistance shall not be less than 25,000 ohms or more than 750,000 ohms to protect personnel from any potential electrical shock hazards. Two leg stats, one on each leg, shall be worn.

5-5.3.3.1. Test Requirements. Leg stats shall be tested prior to the initial entry each day into a hazardous area and need not be retested unless the leg stats or the leg stat leads are removed or replaced.

5-5.3.3.2. Test Method. Method of test shall be the same as required for conductive shoes, paragraph 5-5.3.2.3.

5-5.3.4. Wrist Straps. Wrist straps may be used in lieu of conductive floors with conductive shoes or legstats for personal grounding. Wrist straps shall have a minimum of 25,000 ohms and a maximum of 1,200,000 ohms series resistance for personal safety. A wrist strap may be connected to the ordnance ground or any other secondary ground system component.

5-5.3.4.1. Test Requirements. Wrist straps shall be tested prior to initial use each day and need not be retested unless the wrist strap or wrist strap lead is removed.

5-5.3.4.2. Test Method. Tests shall be conducted with a wrist strap tester or by a meter capable of testing 1,200,000 ohms ±10%. If a wrist strap tester is used, the test shall be conducted in accordance with the wrist strap tester manufacturer's instructions. The test of the wrist strap using a standard meter shall be conducted by connecting one lead of the meter to the contact plate of the wrist strap and the other lead to the free end of the wrist strap.

NOTE

A standard analog ohmmeter is generally not suitable for this type of measurement. The accuracy of the meter depends on the swing of the meter needle. This resistant scale is not linear. Therefore, the accuracy (as a percentage) changes with the resistance being measured and will exceed 10% at 1,000,000 ohms.

5-5.3.5. Ground Grab Bars. Although part of the static ground system, ground grab bars are a passive element; that is, they only work while an individual is in contact with the bar. Ground grab bars are also different from other ground systems in that they have a low resistance to ground. Their purpose is to dissipate static charges that may have accumulated before entering the facility. Ground grab bars shall be installed just outside the entrance doors to areas in which special hazards exist; for

example, facilities handling explosives and explosive items that are sensitive to electrostatic discharges. Such items are primers or detonators in the assembly phase. Ground grab bars are required in special hazard areas unless an alternate method is used to dissipate static prior to entering the hazard area. Some special weapons may require ground grab bars as an added precaution to conductive floors and shoes. A ground grab bar consists of a length of non-corroding conductive material connected to the secondary ground. All persons entering structures that are equipped with ground grab bars shall momentarily grasp the bar to dissipate any possible accumulation of static electricity. These bars shall not be painted. The resistance from the grab bar to the secondary ground shall be less than 1 ohm.

NOTE

Ground grab bars do not prevent the reaccumulation of static electricity after release of the bar. To prevent reaccumulation, static grounding devices must be used.

5-5.3.5.1. Test Requirement. Grab bar measurements shall be made at least every 24 months.

5-5.3.5.2. Test Method. Using an ohmmeter, measure between the grab bar and the secondary ground girdle.

5-5.3.6. Miscellaneous Conductive Items. Conductive table tops, mats, scales, or belting may be used to provide a conductive path to ground for static electricity control during ordnance operations.

5-5.3.6.1. Test Requirements. Conductive table tops, mats, scales, or belting shall not exceed 1,000,000 ohms resistance and shall be tested at least every 24 months. Any item that may provide a path to ground for personnel shall have a minimum resistance 5,000 ohms in areas with 110-volt service, 10,000 ohms for 120/240 or 208Y/120-volt service, etc.

5-5.3.6.2. Test Method. Surface conductivity measurements shall be conducted by those methods used for testing the surface resistance of conductive floors where practical (paragraph 5-5.3.1.3). Volume resistivity measurements shall be made by measuring the resistance between the 5-pound electrode described in paragraph 5-5.3.1.3 on the conductive surface and the point at which the item is bonded to the secondary-grounding girdle. The instrument used to make this measurement shall be accurate to within ±10%.

5-5.4. ORDNANCE GROUND. An ordnance ground is one of several methods (see paragraph 5-9) which can be used to ensure that electric currents do not flow between ordnance components when they come into contact during mating/unmating, assembly/ disassembly, warheading, etc. The intent of the ordnance ground is to bring and maintain a zero potential difference between weapon components being mated. Figure 5-4 shows a typical installation of ordnance grounds. The requirements for an ordnance ground are as follows:

5-5.4.1. Ground Connection. The ordnance ground system shall be electrically separated from all other ground systems (and objects connected to them) and shall be bonded to the secondary ground girdle at a single point at the girdle. The connection to the girdle shall be a bolted connection so that, during testing, the connection can be broken to prove isolation from all other grounds. Building grounding test plan shall show the single point for ground connection.

5-5.4.2. Work Zones. When ordnance grounds are installed, it is possible to establish work zones in a structure. These work zones need to be separated (although not necessarily by walls) so that items

connected to one ordnance ground cannot be connected to another ordnance ground. In the example shown in figure 5-4, all ordnance in area A can only be connected to floor receptacles or busses that share a common, single-point secondary ground girdle connection. The same applies to areas B and C. The zones need not be divided by walls provided, positive measures are taken to ensure that the components will not come into contact or be mated when connected to busses that do not have the same common single-point ground connection.

5-5.4.3. Extending the Ordnance Ground. It is permissible to attach metallic items such as metal tabletops to the ordnance grounding system in order to extend the system. When such a connection is made, the metal tabletop must be installed in the same manner as the ordnance grounding system bus bar. The tabletop must also be labeled as an ordnance ground. Caution must be taken to ensure that no electrically powered equipment is permanently located or temporarily stored on an ordnance grounding system.

5-5.4.4. Marking. The ordnance ground shall be clearly marked. Other grounds that could be mistaken for an ordnance ground, as determined by the activity, must be marked.

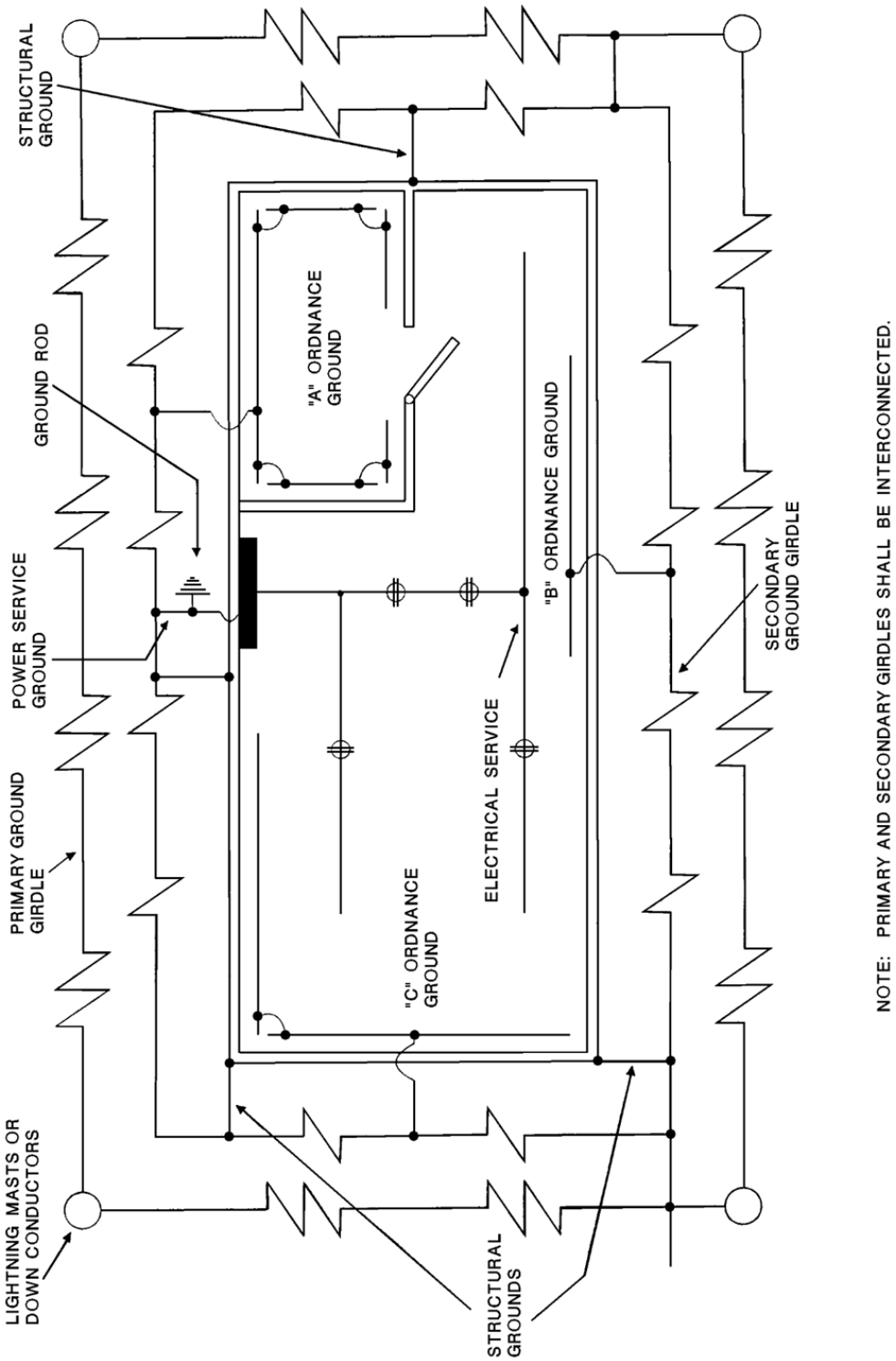

Figure 5-4. Primary and Secondary Grounding Systems for Typical Ordnance/Explosive Handling Building

5-5.4.5. Test Requirements.

5-5.4.5.1. Visual Tests. Ordnance grounds shall be visually inspected at least every 6 months to ensure that connections are secure and free from paint, corrosion, or foreign materials that may impair the efficiency of the systems. Visual inspections shall be recorded to reflect the inspection date, inspector and results. Ordnance ground inspections discussed herein do not include inspection of portable static ground cables used to connect weapons and ordnance items to ordnance ground systems. These are discussed in paragraph 5-9.8.

5-5.4.5.2. Electrical Tests. Ordnance grounds shall be tested for electrical resistance and continuity upon installation and at least every 24 months according to the procedure in paragraph 5-5.4.6.2. The maximum resistance to ground for hazardous locations is 25 ohms. The results of these tests shall be maintained on file for at least six inspection cycles. It is recommended that test records be maintained for longer periods to provide a better database for trend analysis.

5-5.4.6. Test Methods.

5-5.4.6.1. Visual and Physical Tests. The visual and physical tests of ordnance grounds shall consist of inspecting the ordnance grounding receptacles inside (and, if appropriate, outside) to ensure they are free from debris. Ordnance ground interfaces, ball studs, bus bars, or inspection boxes should be inspected for evidence of corrosion and broken connections. Bus bars and ball studs should be neither damaged nor loose. It should be confirmed that the ground is adequately marked and legible. A tug-test should be conducted at the connection between the ground girdle and test rods as available. During visual inspections, ordnance grounds shall be examined to ensure that they are isolated from the other grounds that are installed in a facility.

5-5.4.6.2. Electrical Tests. Ordnance ground electrical testing consists of resistance to earth testing and bonding testing.

a. Earth Resistance. The measurement of resistance to earth of the ordnance ground is not necessary if the earth resistance of the secondary ground girdle and the bonding resistance between the girdle and the ordnance bus bar are measured.

b. Bonding. Bonding resistances shall be measured with a meter capable of measuring 1 ohm ±10%. Points that should be tested are those where each ordnance grounding system enters the structure. When the ordnance grounding system bus bar can be isolated, the isolated bus bar should be measured to ensure a resistance of greater than 20,000 ohms. The bus bar should then be reconnected to ensure the bonding resistance specified above.

5-5.5. STRUCTURAL GROUNDS. The purpose of the structural ground is to bond all the structural steel in a facility to the secondary ground girdle. This will preclude any sideflash problems for permanently installed and bonded equipment as a result of lightning strikes. The structural steel in all ordnance operating buildings shall be bonded to the secondary ground girdle with an AWG 1/0 or larger copper or copper clad cable. No greater than 1 ohm resistance shall exist between the structural steel frame and the secondary ground girdle. The testing of the structural steel grounding is a part of lightning protection system maintenance and is discussed in paragraph 6-9.

5-5.6. GROUND LOOPS. A ground loop may be composed of any loop of conducting material such as structural steel, wire, metallic piping, or any other low impedance conductor (or combination thereof). When a magnetic field passes through a closed conductive loop, a current will be induced into the loop. The source of this magnetic field may be 60-Hertz alternating current (AC) or an electromagnetic pulse

such as lightning. When this ground loop is not closed, an open circuit voltage will be produced between the terminals. The closing of such a ground loop can result in current flow through that part of the grounding system and possibly arcing at the attachment point. Where ground loops are present, the attachment of a grounding cable, closing the loop, could potentially result in current flow to or through ordnance items, depending upon construction.

5-5.6.1. Should this short-circuit current path flow through ordnance materials or components, a potentially hazardous condition may occur. To support those conditions where a potentially hazardous situation could occur as a result of ground loop, an ordnance grounding system has been developed to support Navy ordnance production operations. The ordnance ground system must be installed such that a single-point interconnection will exist with the secondary grounding system.

5-5.6.2. When significant resistance is introduced into a ground loop (such as that produced by a conductive floor, Table top, wrist straps, etc.), the amount of current flow in the loop will be minimal and should not be of concern for the purposes discussed in this chapter.

5-6. BONDING.

Bonding is the joining of metallic parts to form an electrical conductive path as determined by testing that will ensure electrical continuity and the capacity to conduct safely any current likely to be imposed. Bonding can be of two types: a direct bond and an indirect bond. A direct bond is the establishment of the desired electrical path between the interconnected members without the use of an auxiliary conductor. The connection of the primary ground girdle to the secondary ground girdle is made by an indirect bond. However, the bonding jumper is directly bonded to the girdle on each end. Direct bonds may be either permanent or semi-permanent in nature. Permanent bonds may be defined as those intended to remain in place for the expected life of the installation and not required to be disassembled for inspection, maintenance, or system modifications. Some bonded junctions (such as the connection of the ordnance ground to the secondary grounding girdle) may have to retain the capability of being disconnected without destroying or significantly altering the bonded members. All such connections not permanently joined are defined as semi-permanent bonds. These bonds include those which use bolts, screws, rivets, clamps and other auxiliary devices for fasteners. When selecting these devices, the corrosive effects of dissimilar metals must be considered.

5-6.1. DIRECT BONDING TECHNIQUES. Examples of direct bonding techniques include welding, brazing, bolts and rivets.

5-6.1.1. Welding. In terms of electrical performance, welding is the ideal method for a permanent bond. The intense heat (in excess of 4,000ºF) involved is sufficient to boil away contaminating films and foreign substances. A continuous metallic bridge is formed across the joint; the conductivity of this bridge typically approximates that of the bond members. The mechanical strength of the bond is high; the strength of a welded bond can approach or exceed the strength of the bond members themselves. Since no moisture or contaminants can penetrate the weld, corrosion is lessened.

5-6.1.2. Welding Techniques. Welds should be used whenever practical. Although welding may be a more expensive method of bonding, the reliability of the joint makes it attractive for bonds that will be inaccessible once construction is completed. Most metals that will be encountered in normal construction can be welded with one of the standard welding techniques such as gas, electric arc, Heliarc, and exothermic.

5-6.1.3. Exothermic Welding. An effective welding technique for many bonding applications is the exothermic process. In this process, a mixture of aluminum, copper oxide, and other powders is held in

place around the joint with a graphite mold. The mixture is ignited and the heat generated (in excess of 4,000 ºF) reduces the copper oxide to provide a homogenous copper blanket around the junction. Because of the high temperatures involved, copper materials can be bonded to steel or iron as well as to other copper materials. Figure 5-5 shows examples of the various bond configurations for which molds are readily available. When using this method, it is very important that the manufacturer's direction be followed closely. The mold should be dried or baked out as specified, particularly when the mold has not been used for several hours and may have absorbed moisture. The metals to be bonded should be cleaned of dirt and debris and should have the excess water dried off. Water, dirt and other foreign materials cause voids in the weld, which may weaken it or may prevent a low resistance joint from being achieved. A further requirement is that the mold size must match the cable or conductor cross sections; otherwise, the molten metal will not be confined to the bond region.

5-6.1.4. Brazing. Brazing (to include silver soldering) is another metal flow process for permanent bonding. In brazing, the bond surfaces are heated to a temperature above 800 ºF but below the melting point of the bond members. A filler metal with an appropriate flux is applied to the heated members, which wets the bond surfaces to provide intimate contact between the brazing solder and the bond surfaces. As with higher temperature welds, the resistance of the brazed joint is essentially zero. However, since brazing frequently involves the use of metal different from the primary bond members, additional precautions must be taken to protect the bond from deterioration through corrosion.

5-6.1.5. Soft Solder. Soft soldering is not permitted for interconnections between elements of lightning protection networks by either the Lightning Protection Code (NFPA 780) or the Underwriter's Master Labeled System and is therefore not permitted at Department of the Navy (DON) activities.

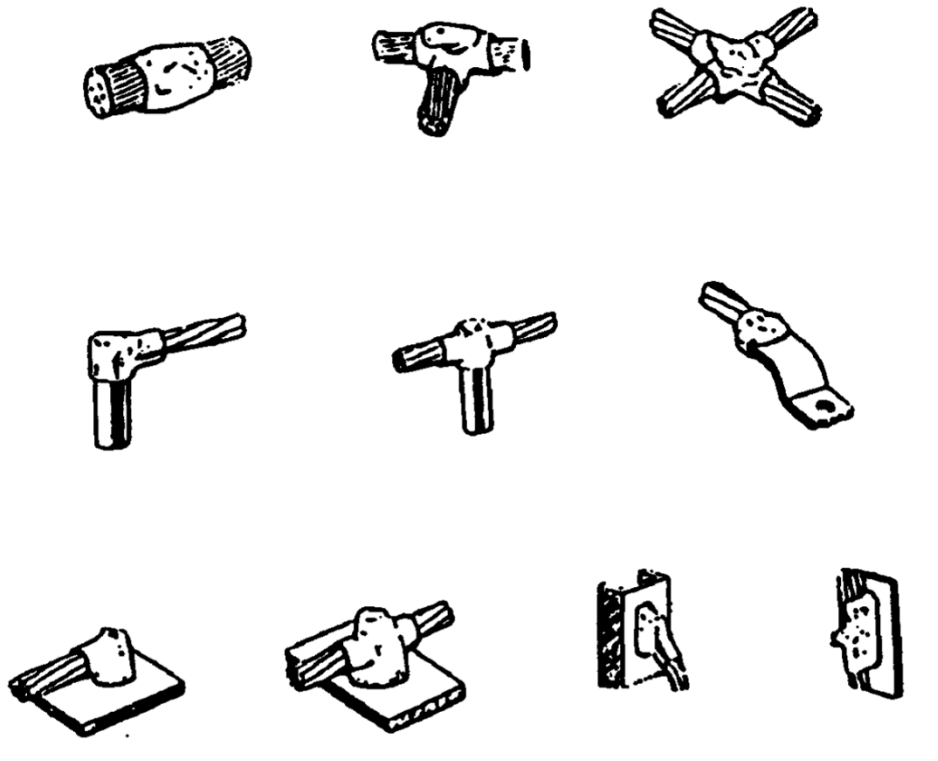

Figure 5-5. Examples of Exothermic Weld Configurations

5-6.1.6. Bolts. The most common semi-permanent bond is the bolted connection (or one held in place with machine screws, or other threaded fasteners) because this type provides the flexibility and accessibility that may be required. The bolt or screw should serve only as a fastener to provide the necessary force to maintain the 1,200-1,500 pounds per square inch (psi) pressure required between the contact surfaces for satisfactory bonding. Although the bolt or screw threads may provide an auxiliary current path through the bond, the primary current path should be established across the metallic interface. For this reason, proper cleaning of the surfaces to be bonded must be accomplished. Because of the poor reliability of screw thread bonds, self-tapping screws are only to be used for bonding that will not carry lightning currents, such as bonding, gutters, and only when all other bonding methods are impractical or impossible. All screw thread bonds shall be included in the facility's electrical test plan and visual inspection plan. Figure 5-6 shows some examples of bolted connections.

5-6.1.7. Rivets. Riveted bonds are less desirable than bolted connections or joints bridged by metal flow processes. Rivets lack the flexibility of bolts without offering the degree of protection against corrosion of the bond surface that is achieved by welding, brazing or soldering. Because the primary current path is established across the metallic interface, proper cleaning of the surfaces to be bonded must be accomplished.

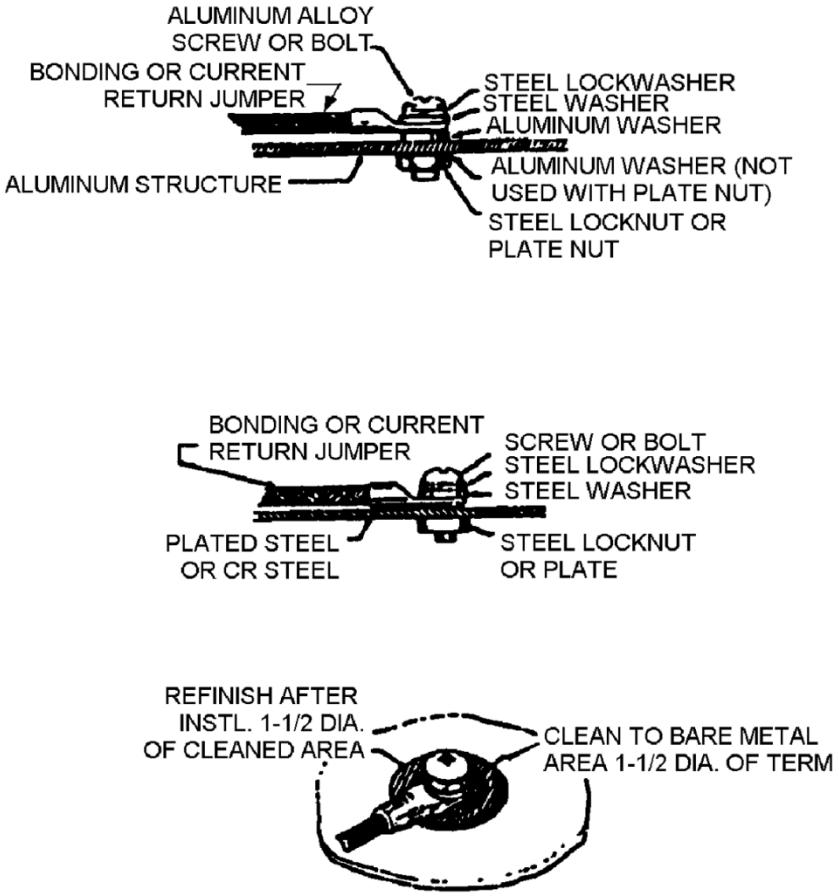

Figure 5-6. Examples of Bolted Bonds

5-6.2. INDIRECT BONDING TECHNIQUES. The preferred method of bonding is to connect the objects together with no intervening conductor. Unfortunately, operational requirements or object locations often preclude direct bonding. When physical separation is necessary between the elements of an equipment complex or between the complex and its reference plane, auxiliary conductors must be incorporated as bonding straps or jumpers. Such straps are commonly used for the bonding of large pieces of equipment to a structural ground. They are also used for bypassing structural elements, such as hinges, or when carrying high level currents.

5-7. MISCELLANEOUS GROUNDING REQUIREMENTS.

The following requirements apply to machinery and equipment grounding and grounding while spray painting.

5-7.1. MACHINERY AND EQUIPMENT. Mixers for pyrotechnic, propellant, and explosive compositions, screening and sifting devices, assembly and disassembly machines, conveyors, elevators, defusing machines, steel work tables, presses, hoppers, and all associated equipment involved in loading or processing explosives and explosive materials shall be bonded to the secondary ground girdle. The bonding resistance required for these items is 1 ohm or less. The belting used on these conveyors shall be conductive and meet the requirements of paragraph 5-5.3.6. In non-hazardous locations, nonelectrical equipment is not required to be grounded unless the grounding is part of the lightning protection system.

5-7.2. SPRAY PAINTING OPERATIONS. Several thousand volts have been recorded between items being painted and ground during spray painting operations. Spray gun nozzles and the items being painted shall be grounded to the same point on either structural steel or a static ground during spray painting operations. Electrostatic paint systems shall be used in accordance with the manufacturer's recommendation and shall not be used in areas where there are exposed explosives or exposed EEDs, or in areas where there is inadequate ventilation.

5-8. TEST AND INSPECTION OF GROUND SYSTEMS.

Proper maintenance is critical for the efficient operation of grounding systems. For all electrical testing and visual inspections performed on facility installed grounding systems (power system, instrumentation ground, ordnance ground, ground grab bars, conductive flooring, secondary grounds and bonds), accomplishment is permitted within a +/- one month window around the scheduled due date. This is to allow for test/inspection scheduling around production activities, facility access restrictions/maintenance work, and weather conditions that may affect the accuracy of measurements.

5-8.1. GROUNDING SYSTEM TEST PLAN. A grounding system test plan shall be established to include details on both the visual inspection and electrical testing of grounding systems and grounded components installed in Navy ordnance facilities. The specific grounding system test plan for a structure must identify the ground system test locations along with a listing or description of the item to be tested and the type of test to be conducted. For clarity and accuracy, a sketch of the facility should be developed based on the approved building drawings and included in the test plan.

5-8.1.1. Responsibilities. The grounding system test plan shall provide documentation of the responsibilities for maintaining and updating written test procedures, conducting the testing, recording the test results, reviewing the test results, scheduling any necessary corrective actions, and conducting the visual inspections. It is the decision of the commanding officer of the facility as to how the various tasks listed above are delegated.

5-8.1.2. Training. When making the decision as to how the responsibilities are delegated, it must be ensured that those offices performing the various functions have proper training or qualifications in accordance with appendix C to be able to perform the function.

5-8.1.3. Test Wells. When test wells are designed into the grounding system installations, the test well can also be used to provide a capability for the isolation of individual ground rods. When individual ground rods can be isolated, a grounding system test plan can be developed which will consist of the measurement of the earth resistance of individual ground rods. IEEE Standard 142 provides information on the calculation of the total resistance of a ground system based on the resistance to earth of individual ground electrodes. Additional information is available in the Standard Handbook of Electrical Engineering (Fink and Carroll).

5-8.1.4. Identification of Test Points. The resistance to earth of the lightning protection grounding system and selected external secondary ground system components shall be measured every 24 months. Resistance to earth measurements shall also be made on one side of a fence gate. In addition, bonding measurements shall be made between the lightning protection system down conductors and lightning protection grounding system test rods (if available) as well as between the lightning protection ground system and secondary grounding system earth resistance test points. Bonding measurements shall also be made between those secondary grounding system earth resistance test points, and:

a. Selected structural steel in the frame of the structure;

b. The electrical service grounding point (where applicable);

c. Selected static grounding system grounding points;

d. Instrumentation and ordnance grounds;

e. Any machinery or large structural items.

Grounded structural steel members that are proven to be bonded to the secondary ground girdle (by test) may be used as a reference point for internal bonding measurements in lieu of the secondary ground system earth resistance test points.

5-8.1.5. Other Electrical Test Points. Among the machinery and large structural items which should be included as electrical test points in the grounding system test plan are weapons systems handling equipment, doors and door frames, metallic window frames, handrails, gutters, metal ventilators, conduit, water pipes, and sprinkler systems. It is not necessary that every section of the conduit, water pipe, or sprinkler system be tested. However, some portions of each of these systems should be included as electrical test points in the grounding systems test plan. As a rule of thumb, the electrical test point locations selected should be chosen such that they can be accessed by electrical test personnel without any unnecessary danger to the test personnel.

5-8.1.6. Selecting Test Points. The criteria to be used in the selection of specific grounding system test points is, in most respects, up to the individual ordnance facility. For example, test wells may be used to provide access to the lightning protection grounding system and secondary grounding system. In such cases, the grounding system access points provided by the test wells are recommended as the test points for earth resistance testing and reference points for bonding resistance testing. In those cases where the test wells (or similar grounding girdle access points) are not available, it will be necessary to establish an alternative grounding girdle access point. In such cases, it is possible to use

a lightning protection system down conductor (such as the cable bonding a lightning protection mast to the associated ground girdle) as an access point to the lightning protection ground system. Access to the secondary ground girdle can often be provided by structural components such as structural steel members (which are equipped with a bonding cable), a door frame, or a static ground grab bar. In those cases where direct access to the ground girdles is not available, some baseline testing should be conducted to ensure that the items chosen to represent the ground girdles are representative of the respective ground girdles.

5-8.1.7. Development of Sketch of Structure Detailing Test Points. A sketch of the facility shall be developed and used to identify test point locations for the grounding system test plan. Figure 5-7 provides an example of such a sketch for a typical ordnance facility. Figure 5-8 shows an example of the associated data sheet for the building. These two illustrations are examples of techniques, which could be used to meet the above requirements. Figure 5-7 uses symbols as a way of identifying the item to be tested. In this illustration, a solid square is used to identify a lightning protection system component, a triangle is used to identify an ordnance ground test point, a circle is used to denote a structural component, a # symbol is used to denote a static grounding system's ground point, and a * symbol is used to denote metallic conduit. Alternative techniques may also be used to identify the item to be tested. For example, the technique used in figure 5-9 uses letters to identify the type of item represented by the test point number. While the technique used to identify the item to be tested can vary according to what will work best for the facility or station, the sketch should provide sufficient detail to allow someone not familiar with the facility to easily and accurately identify the item-under-test and test point location.

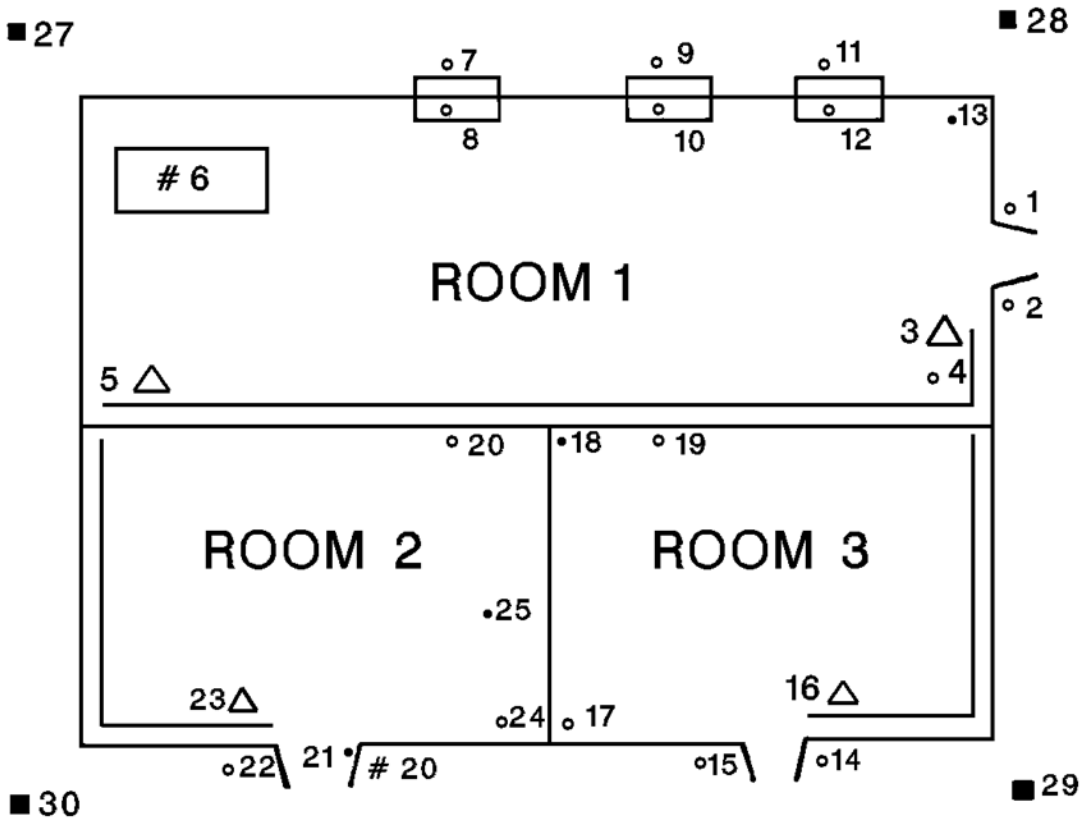

1 = Door
2 = Door
3 = Ordnance ground bus
4 = Structure
5 = Ordnance ground bus
6 = Metal table top
7 = Window guard
8 = Window
9 = Window guard
10 = Window
11 = Window guard
12 = Window
13 = Conduit
14 = Door
15 = Door
16 = Ordnance ground bus
17 = Structure
18 = Conduit
19 = Missile stand
20 = Ground grab bar
21 = Door
22 = Door
23 = Ordnance ground bus
24 = Structure
25 = Conduit
26 = Structure
27 = Mast
28 = Mast
29 = Mast
30 = Mast

Figure 5-7. Example of a Sketch Identifying Electrical Test Points

3-Point Fall-of-Potential (25 ohms maximum)			
Test Point	**Resistance (ohms)**	**Test Point**	**Resistance (ohms)**
1		**30**	
20		**28**	
Bonding Measurements (1 ohm maximum)			
Test point to	**Test point**	**Resistance (ohms)**	**Comments**
1	28		
20	30		
30	29		
30	27		
1	20		
1	2		
1	5		
1	4		
1	6		
1	7		
1	8		
1	9		
1	10		
1	11		
1	12		
1	13		
20	14		
20	15		
20	16		
20	17		
20	18		
20	19		
20	21		
20	22		
20	23		
20	24		
20	25		
20	26		

Figure 5-8. Sample Data Sheet

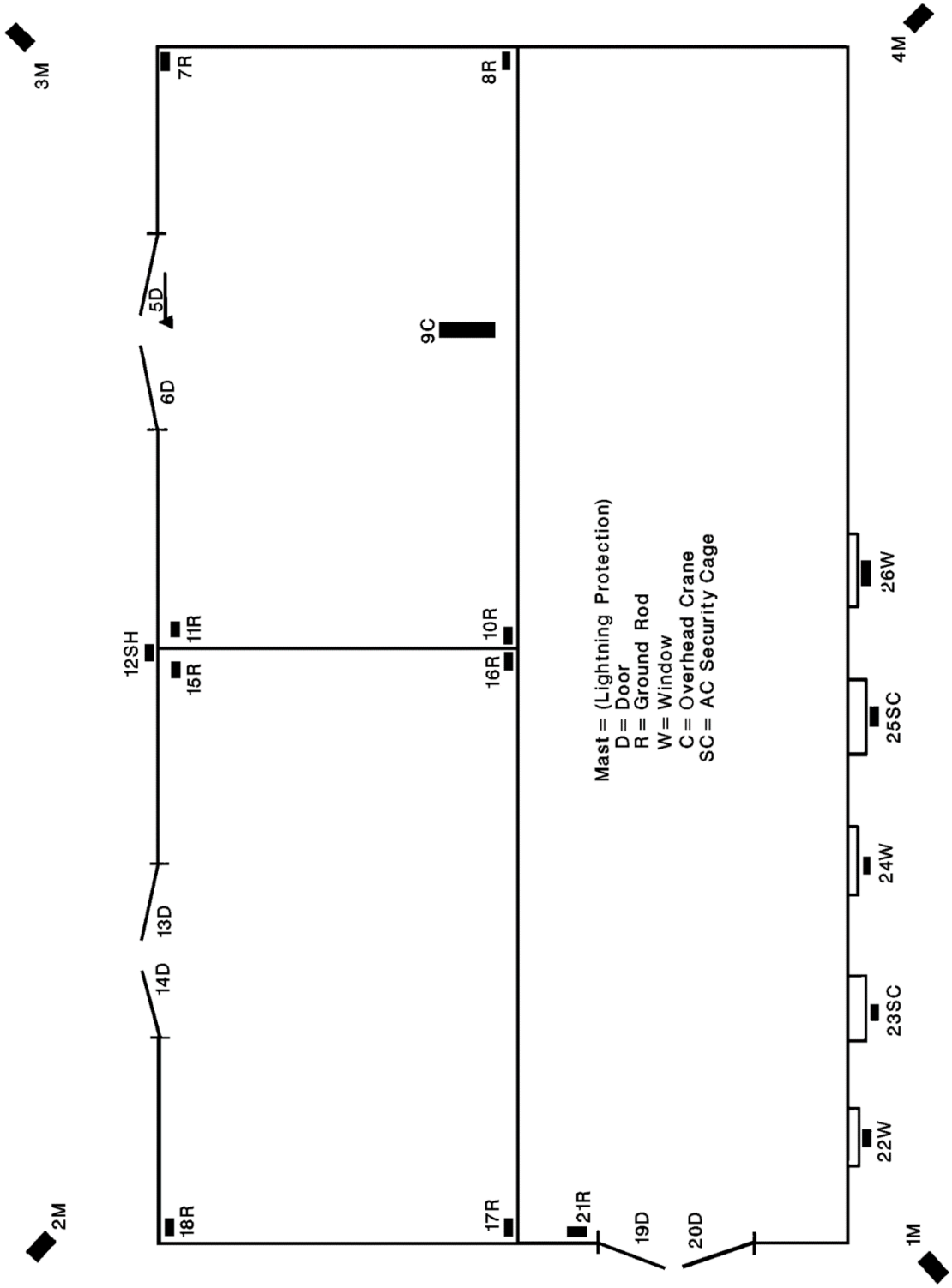

Figure 5-9. Alternate Technique for Labeling Test Points

5-8.1.8. Review of Data. As a minimum, the review of electrical test data must ensure that the maximum and minimum resistance requirements are being met. In addition, it is recommended that some criteria be established to identify any data points with a difference in resistance values, which could indicate a potential problem. Even though the individual data points may be within the maximum or minimum levels required, a large variation in data could be an indication of a problem. The reason for any large variation in test data should be justified during the analysis of the data. It must be noted that variations in data may be expected due to the repeatability of the test equipment and set up, as well as the variation in contact resistance between the item-under-test and the test lead.

5-8.1.9. Conductive Floor Test Results. In the review of conductive floor test results, it is recommended that any value which exceeds one million ohms or any value less than 5,000 ohms (for a facility serviced by 120 VAC) to 20,000 ohms (for a facility serviced by 480 VAC) be investigated and repaired, as appropriate.

5-8.1.10. Review of Visual Inspection Findings. The review of data must not be limited to the electrical test results. A review should also be conducted on the results of the visual inspections. When a visual inspection checklist is used, the review may center on the analysis of the completed checklist. The checklist should indicate any condition where the grounding systems fail to meet resistance requirements. In addition, the comments section should be reviewed to ensure that nothing was found which should be analyzed in more detail or which should be repaired even though it may be sufficient to meet the requirements at the time of the visual inspection. If a visual inspection checklist is not used, a review of the notes of each of the inspectors should be performed to determine whether any corrective action is required or recommended.

5-8.2. ELECTRICAL TESTING. There are several methods that can be used to determine the resistance to earth of installed grounding systems. These can be subdivided into two general categories; the direct or two-terminal test, and the three-terminal test. Of all the earth resistance test methods available, only the three-point fall-of-potential test method is acceptable for use in measuring the resistance to earth of grounding systems in ordnance facilities. A brief discussion on the two-terminal and three-point fall-of-potential grounding system test methods is provided in the following paragraphs. The discussion on the two-terminal test method is provided because it is an alternate test method that may be used when it is not practical to perform a three-point fall-of-potential test (see paragraph 5-8.2.2). Additionally, the alternate test method can be used as a method to confirm the order of magnitude of test results obtained when using the three-point fall-of-potential method. If the two-terminal method is the sole method used, NOSSA must be notified to approve this test procedure and the accompanying reasons why the fall-of-potential method cannot be used.

5-8.2.1. Two-Terminal Test Method. The two-terminal (or direct) test methods are a very simple technique that can be used to measure the resistance to earth of a grounding system. In this case, the series resistance between the grounding system under test and a ground reference point is measured using a technique identical to the bonding measurements. The most common ground reference point used in this type of measurement is a metallic water pipe, although other buried metallic items with extensive earth contact may be used. The ground reference point used must be electrically continuous, must have sufficient surface area contact to the earth to ensure a negligible contact resistance, and be located far enough from the ground system under test to be outside the sphere of influence of the grounding system. Whenever a buried system such as water pipe is used as the ground reference point, a procedure should be implemented to ensure that conductive components are used when repairs are made.

5-8.2.2. Three-Point Fall-of-Potential Earth Resistance Testing. On new primary or secondary ground girdles, measurements of the resistance to earth shall be made every month for the first year.

Additionally, when an existing ground system is modified, repaired, or added to which disturbs more than half of the total ground system, a monthly resistance to earth test shall be performed for the first 12 months. After the first year, measurements of the resistance to earth shall be made every 24 months. Portable pre-engineered ready service lockers and portable magazines/portable magazine groups are an exception to the monthly test requirement. Monthly testing of new ready service locker/portable magazine/portable magazine group ground rods is not required. The initial testing (immediately following installation) followed by periodic 24-month testing (within one month, weather permitting) is required. The three-point fall-of-potential test method involves injecting a known value of low frequency alternating current between a current reference electrode and the grounding system under test. A second reference electrode, the potential electrode, is located between the current electrode and the grounding system under test. Figure 5-10 shows how a four-terminal earth resistance tester is to be configured when used in performing such a test. According to Ohm's Law, the resistance to earth of the grounding system under test is equal to the voltage measured between the potential electrode and the grounding system under test divided by the current injected into the current electrode. The equipment developed to conduct such testing is designed to provide an output calibrated in ohms. Prior to start of test, ensure that the test set is calibrated and the calibration is current. To determine whether the electrode spacing is proper, the spacing of the potential electrode should be varied to ensure that the measured value does not vary greatly. A discussion on electrode spacing will follow in paragraph 5-8.2.3.

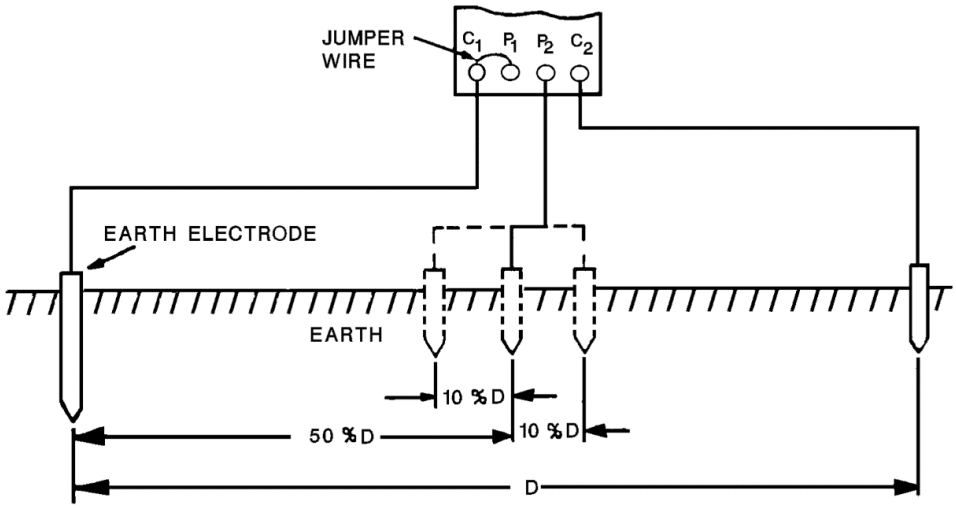

Figure 5-10. Four Terminal Tester Setup

5-8.2.3. Effect of Reference Electrodes Locations. For both the two-terminal and three-point fall-of-potential test methods, the reference electrodes must be placed outside the sphere of influence of the earth electrode under test and any other reference electrodes. Figure 5-11 provides a graphic example of the sphere of influence of an earth electrode. The concentric arcs represent equipotential lines, which would be produced by the radial flow of current into earth of uniform resistivity. When these spheres of influence overlap, as is shown in figure 5-11, the shells of the current add to the shells of the earth electrode under test and accurate resistance measurements would not be obtained using either a two-terminal or fall-of-potential test method. When performing test, take the following into consideration:

a. For most accurate measurements, the current electrode, C2, (see figure 5-10) should be placed as far from the earth electrode under test as practical. This spacing is often limited by the local surroundings Examples of items which can limit the spacing of the current electrode are nearby bodies of water, swamps, large rocky areas, or other buildings in the area which have large grounding systems of their own.

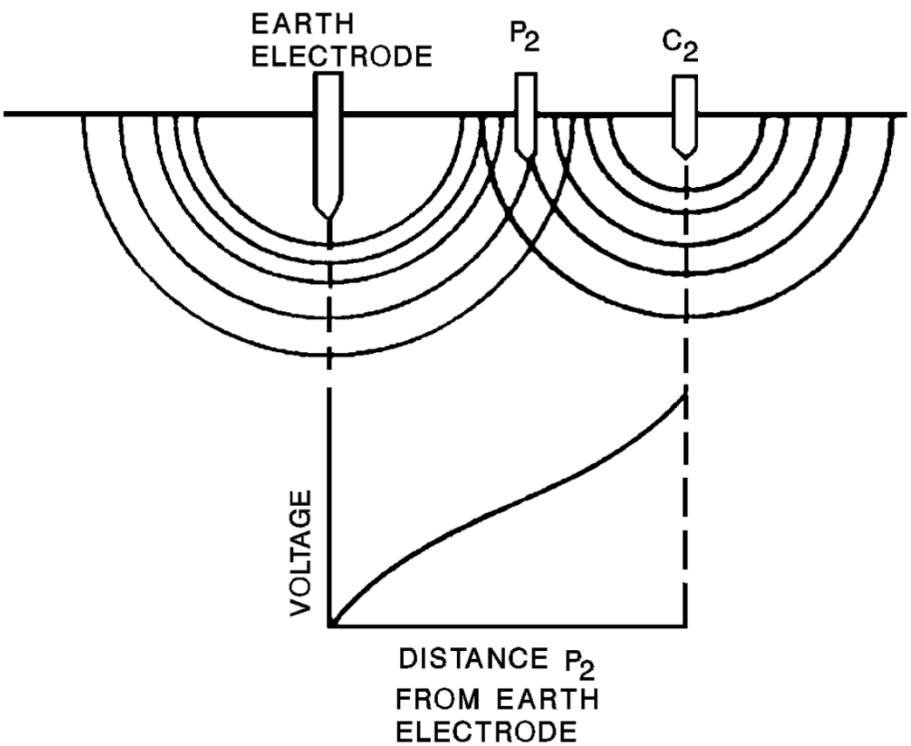

Figure 5-11. Spheres of Influence

b. Biddle Instruments ("Getting Down to Earth, Manual 25Ta, Fourth Edition, April 1981") recommends that the potential electrode, P2, (see figure 5-10) be located roughly on a straight line between the current electrode and the earth electrode under test. The specific location of the potential electrode should be varied and a series of measurements should be taken. These measurements should be plotted as shown in figure 5-12. Where the plot of the resistance measurements reveals a flat area, the spacing of the potential electrode can be considered correct. When there is no obvious flat area on the curve, then the potential electrode should be set at 62% of the distance to the current electrode.

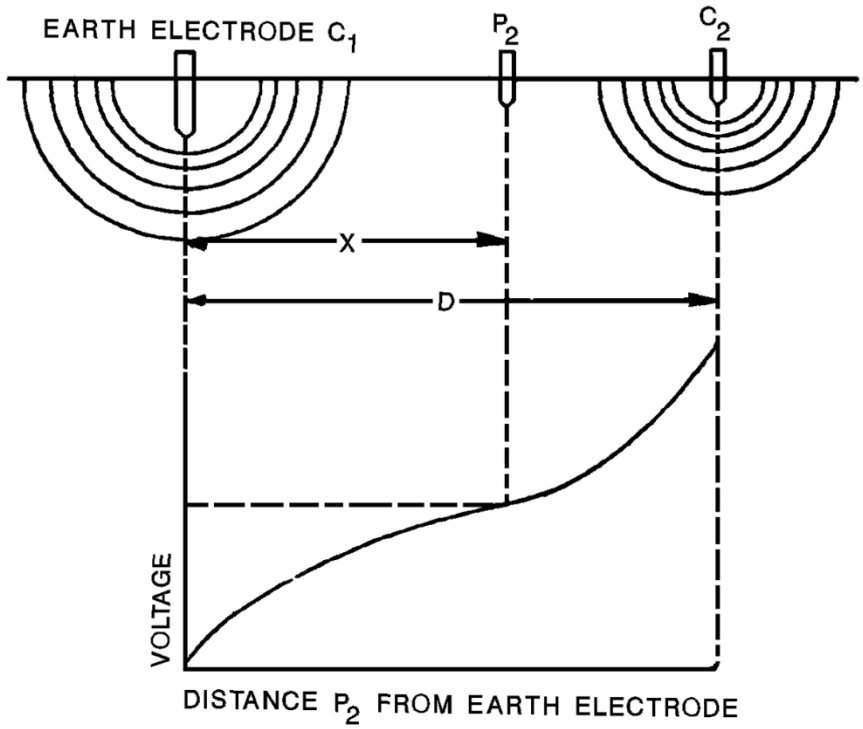

Figure 5-12. Plot of Earth Resistance vs. Probe Locations

c. There are some recommendations which can be used in the determination of the spacing of the current and potential electrodes for three-point fall-of-potential tests.

d. D Guide to Approximate Location of Reference Probes

e. Table 5-2 provides some recommended electrode spacing for small to medium sized grounding systems. The maximum dimension can be determined by calculating the diagonal distance across the ground system. Another recommendation is to use a distance of five times the diagonal distance of the ground system.

f. An alternative technique that can be used in conducting three-point fall-of-potential earth resistance testing is provided in Air Force Regulation AFR 91-38. Figure 5-13 illustrates the Air Force technique which specifies that the current and potential reference electrodes should be located at right angles and the test should be conducted on the part of the ground girdle opposite the service entrance. The reference electrodes are spaced equidistant at a distance of greater than half the diagonal of the structure (vice the grounding system), but not less than 25 feet.

Table 5-2. Guide to Approximate Location of Reference Probes

MAXIMUM DIMENSION, FT.	DISTANCE TO P2, FT.	DISTANCE TO C2, FT.
2	10	70
4	60	100
6	80	125
8	90	140
10	100	160
12	105	170
14	120	190
16	125	200
18	130	210
20	140	220
40	200	320
60	240	390
80	280	450
100	310	500
120	340	550
140	365	590
160	400	640
180	420	680
200	440	710

NOTE:

The maximum dimension is defined as the diagonal across an area defined by the lightning protection system ground girdle.

5-8.2.4. Measurement Accuracy. Commercially available test equipment can be purchased which can provide a measurement accuracy of 10% minimum. However, the assumptions used in the various test methods will often result in much greater inaccuracies or variations in the repeatability of the test results. Only instruments specifically designed for earth ground system testing shall be used to measure the earth system resistance. These instruments are generally designed to reject ground current. Instruments used to measure the earth resistance shall be able to measure multiple ranges with ± 10% accuracy. Instruments used to measure the electrical resistance of objects bonded to the secondary ground shall be able to measure from 0-1 ohm with ±10% accuracy. The same instrument may be used to measure both earth and bond resistances if desired. Instruments using high-test voltages such as meggars shall be used inside a room only if the room is free of exposed explosives and no exposed EEDs are present. Otherwise, the test instruments shall be placed outside the room and the connection made to the item being tested prior to connection to the test instrument. Some of the primary factors influencing the accuracy of earth resistance measurements are:

a. A wide variation in the resistivity of the soil in the immediate area around the grounding system under test;

b. The presence of stray ground currents;

c. The presence of conductors buried near the grounding system under test and the associated reference electrodes, and;

d. The proximity of the reference electrodes to the sphere of influence presented by the grounding system under test. As a result, the purpose of earth resistance measurements is to determine an order of magnitude of the resistance to earth of the grounding system versus to determine a specific value.

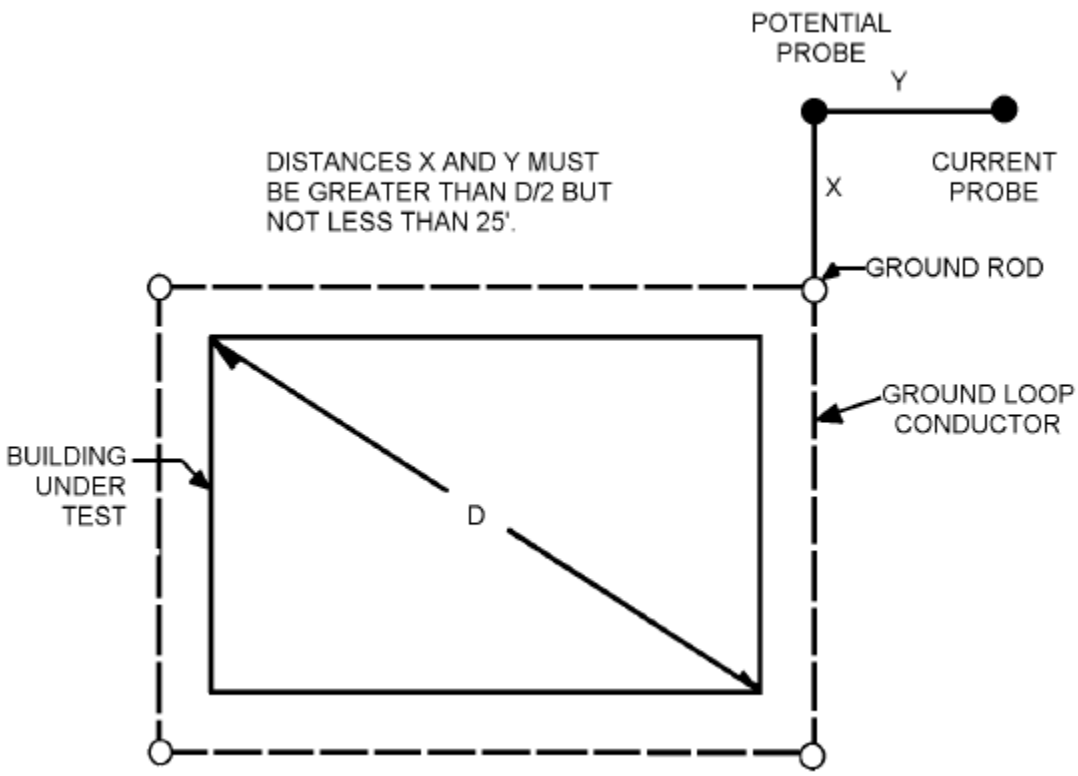

Figure 5-13. U.S. Air Force Probe Locations

5-8.2.5. Example Written Test Procedure. Appendix D presents a draft of a written test procedure, which can be used in the development of a specific written test procedure for an activity. An activity should use this attachment purely as a guide and should feel free to modify it in any way to make their written test procedure fit the operations at the activity.

5-8.2.6. Point-to-Point Bonding Testing. Resistance testing is the most important quality control technique that can be used to quantify the effectiveness of bonds. The bonding resistance test method is a simple point-to-point resistance measurement. It is recommended that the test equipment used in this testing be capable of using a minimum of two milliamperes test current to ensure proper accuracy at the very low resistance levels to be measured. The test instrument must be capable of reading one ohm, +10%.

NOTE

The accuracy of a Simpson 260 multimeter, which is not acceptable for this requirement, is +2.5% of arc, which equates to +20% at one ohm.

5-8.2.6.1. Selection and Preparation of Test Points. The maximum bonding resistance shall be one ohm or less. Since the values expected during such measurements are very low, extreme care must be taken to ensure that the test points are properly prepared for testing to minimize the effect of contact resistance. Preparation of the test points could include the scraping of painted, corroded, or rusted surfaces with files or knives. Careful attention must also be given to the attachment method made with the test points. Some attachment point techniques, which have been successfully used, are electrodes with sharp points or electrodes with clamps which have sharp points which can "bite" into the item under test.

5-8.2.6.2. Effect of Lead Length. When significant lead lengths are used in the testing of the bonding resistance between an item and a ground girdle reference point, the resistance of the cabling used can be much greater than the bonding resistance between the items being measured. It is important that the resistance of the leads used in the testing be measured and recorded prior to (and possibly after) testing. This lead resistance must be subtracted from the measured value of bonding resistance of the item under test to obtain the true bonding resistance of the item under test.

5-8.2.6.3. Example Written Test Procedure. Appendix D shows a proposed test procedure, which can be used to draft a written test procedure conducting bonding resistance testing. This test procedure is written around the use of a digital, four-terminal earth resistance tester. A similar technique can be written around the use of null-balance (or similar) testers.

5-8.2.7. Documentation of Test Results. Electrical test results shall be maintained for the last six inspection cycles. To maximize the ability to perform a trend analysis of the test results, a much larger sample size is necessary. It is recommended that the test data be maintained for the lifetime of the facility. This data can be kept in the form of a paper copy or the data entered into a computer data file. If properly designed, the data file can provide a database, which can be used in a computer-based trend analysis program. Appendix D provides an example of an outline of a minimum written test procedure which can be used in the performance of conductive floor testing. An activity may develop an alternative test procedure as long as it meets the requirements of this manual.

5-8.3. VISUAL INSPECTION. While it is not possible to confirm full system compliance with a visual inspection, it is possible to detect obvious problems such as broken or missing bonding straps, frayed bonding jumpers, and similar items.

5-8.3.1. Inspection Team Membership. The make-up of the visual inspection team, including the team leader, shall be specified in the activity's test plan. The number of persons on the team is not limited. It is recommended that the building supervisor be a member of the visual inspection team, or that he at least assist in the visual inspection of his facility. The building supervisor will be in the facility daily and he will be able to perform unofficial visual inspections as he supervises the operations performed in the facility. It is also important that he know the status of the ground systems in the facility so he can safely and effectively use the systems.

a. Other Inspection Team Qualifications. It is also recommended that the visual inspection team contain personnel knowledgeable in the requirements of this manual and NFPA 780. In addition, there should be personnel on the team who are familiar with the installation and operation of grounding

systems for ordnance facilities. It is recommended that some training be provided to those inspection personnel responsible for these areas.

b. Inspection Test Procedure. The test procedure should detail the responsibilities of each team member, including scheduling, documentation, and identification of any required repairs. Appendix F provides an outline of a test procedure which could be used by a Navy ordnance activity. An activity may choose to add to or modify appendix F in any manner to tailor it to their specific application.

5-8.3.2. Procedure Recommendations. Specific procedures used in conducting visual inspections may vary from facility to facility. These should include both visual as well as physical analyses of the grounding systems. A gentle tug on a ground cable or bonding strap could give some indication of its ability to survive the abuse it may experience within the next 6 to 24 months. This tug could also identify those cases where the strap is broken at the connector, but is being held in place by paint or the few strands of connector that remain.

a. Visual Inspection Checklist. A visual inspection checklist is a valid technique to ensure that the primary components of a grounding system are adequately re-viewed. A visual inspection checklist provides an excellent procedure for documenting the date of the inspection and the status of existing grounding systems. A sample checklist is provided in the attachment to appendix E. Other checklist formats may be used. For example, the checklist provided in this manual simply lists the items to be checked in tabular form. Other checklists may contain a list of specific actions to be performed during the visual inspection. A separate checklist may be developed for each facility or a general checklist may be used for all structures.

b. Electrical Tests Visual Inspection. In any area where there is a significant amount of paint or corrosion at the contact point, an electrical test must be performed during the visual inspection. In addition, where non-translucent insulated cable is used, electrical spot checks should be performed when there is any possibility that the internal cable may be broken. An example where an electrical spot check is recommended is when the cable has been nicked or otherwise damaged.

c. Other Visual Inspection Recommendations. It is recommended that any area where major modifications have been made to a facility since the last visual inspection be examined in detail. Any test point locations that were questionable during the last electrical test should also be examined in detail.

5-8.3.3. Post Inspection Procedures. At the completion of the visual inspection, the checklists shall be reviewed along with any notes made by any inspection team members. Work requests must be generated to correct any deficiencies found during the inspection. A copy of the checklist (or equivalent) should be forwarded to the building supervisor, along with any required corrective actions. A copy of this data package should also be forwarded to all visual inspection team members and should be entered into the station records for retrieval when conducting trend analyses or inspections at a later date.

5-9. OPERATIONAL GROUNDING REQUIREMENTS.

During assembly or disassembly, each individual section of a weapon shall be continuously grounded to a single point. This single point may be achieved by the use of an ordnance ground (described in paragraph 5-5.4) or static-controlled area which uses a single grounding wire for the connection to a conductor leading to the secondary grounding system. Figures 5-14 and 5-15 illustrate other single point grounding methods that can be used in lieu of an ordnance ground system. In addition, personnel performing assembly or disassembly operations shall be grounded by means of conductive shoes on

conductive floors, or with other grounding or bonding methods such as wrist straps if the possibility exists that exposed explosives, flammable gases or liquids, or exposed EEDs or their contacts will be present, unless test results indicate that these items are insensitive to human ESD threats. Inert components of weapons only require grounding prior to mating with explosive components.

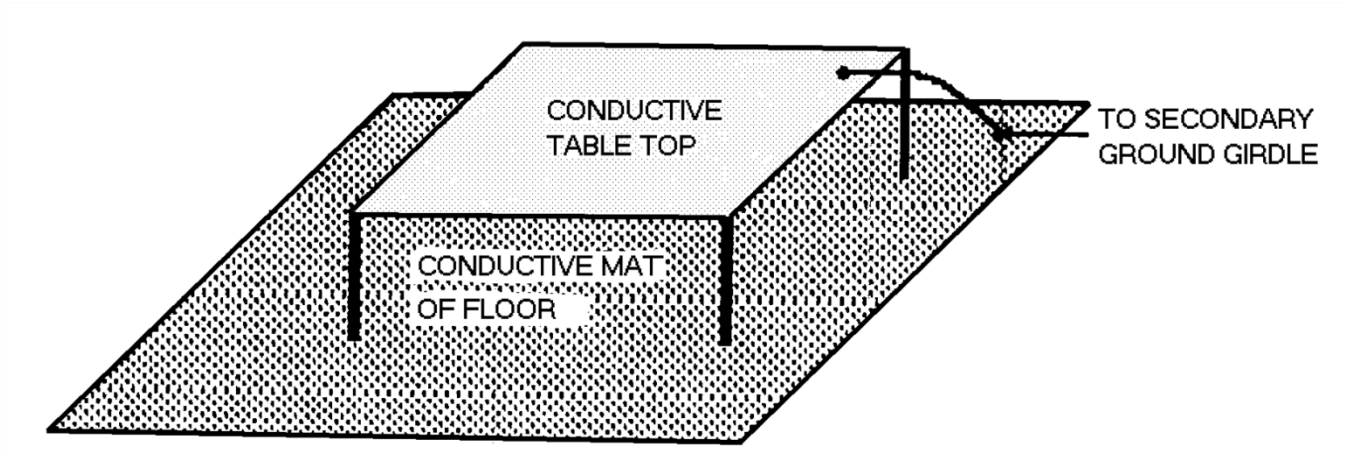

Figure 5-14. Grounding with a Conductive Work Surface

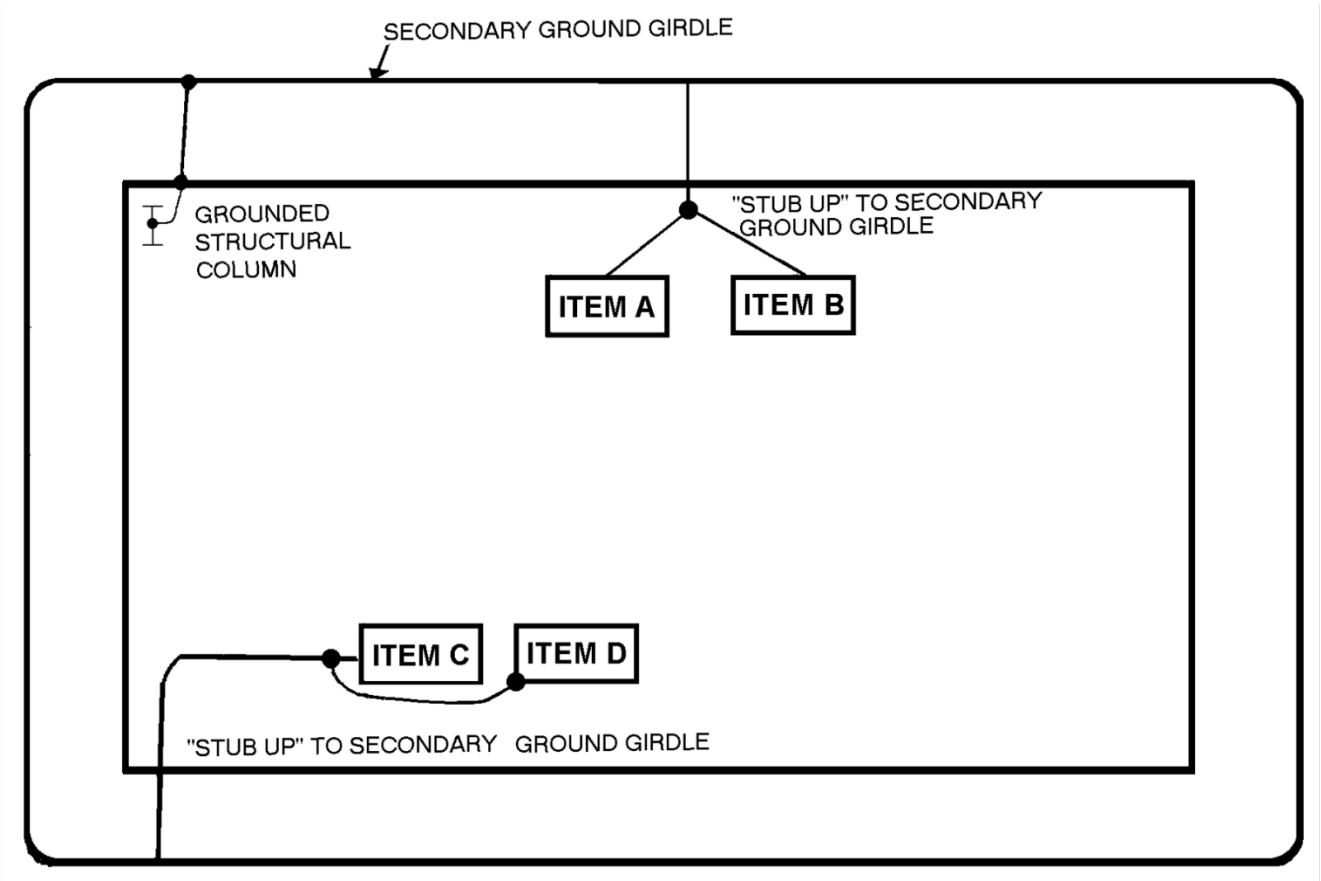

Figure 5-15. Single Point Ground of Ordnance Items

5-9.1. GROUNDING WEAPONS DURING CHECKOUT. During all phases of checkout, the weapon or separate section shall be grounded. Electrical testing and reprogramming operations are permitted outside of a test cell when the operations have been approved for proximity operations by the Weapon System Explosives Safety Review Board (WSESRB) per paragraph 7-9.3.1.

5-9.1.1. Electrical Testing/Programming of Energetic Items with Mechanically Out-of-Line Electro-Explosive Devices. When an energetic item must be connected to an electrical test set that is externally powered and properly grounded (such as through its electrical cord), it is permissible to disconnect the energetic item from its dedicated ground during these tests. This allowance applies specifically when the ordnance item is equipped with a mechanical out-of-line safety interlock device. The EEDs in the circuit being tested must be confirmed to be in an out-of-line (unarmed) state, and the EEDs are never brought into an in-line (armed) configuration except within a test cell after all personnel have been withdrawn or the energetic item is in an approved containment device/suppressive shield or the proximity operations are WSESRB approved.

CAUTION

Unless testing or analysis has identified that the weapon system's EEDs in this configuration are not sensitive to a human-borne ESD threat, personnel must bring themselves to the same electric potential as the weapon by touching the metallic skin of the weapon with a bare hand prior to touching any contacts that may serve as a path to conduct electrostatic charges to EEDs.

5-9.2. GROUNDING WEAPONS DURING UNRESTRAINED ELECTRICAL INTERROGATION. Electrical testing/programming of energetic items can be susceptible to ground reference potential hazards during transient (weather) events (e.g., lightning, high winds, extreme cold with low humidity), these hazards must be considered and controlled. Specifically, those energetic items with EED circuits that are not equipped with a mechanically out-of-line safety interlock device can be particularly susceptible to these hazards. Electrical testing/interrogation must be conducted in a dedicated work zone. The work zone must be clearly defined on the floor to ensure that static and energy development can be addressed via the associated ordnance electrical safety systems. A Powered Interrogation and Programming (PIAP) ground that is used in conjunction with a separately derived AC circuit, designed for each work zone, and used in lieu of other facility grounds, controls hazards and minimizes risk posed to the energetic item during a transient (weather) event. For AE facilities without a PIAP ground, the requirements of paragraph 5-9.2.2 must be followed. Table 5-3 provides a summary of operations and grounding requirements.

Table 5-3. Grounding Requirements

Operations	NEC Ground	PIAP
Operations can be stopped prior to transient weather events	Allowed	Allowed
When all EEDs are equipped with an out-of-line safing device	Allowed	Allowed
Operations cannot be disrupted during transient weather event and EEDs cannot be placed mechanically out-of-line	Not Permitted	Required
Operations cannot be disrupted during transient weather event but all EEDs are mechanically out-of-line	Allowed	Allowed

5-9.2.1. Operations Requiring a PIAP Ground. A PIAP ground system is a single point ground used along with a separately-derived AC circuit. If available, its use is recommended during electrical testing/interrogation of energetic items. See table 5-3. The system prevents electrical potential (voltage) differences in the associated ground references that may arise during a transient (weather-related) event when the testing or programming equipment is establishing an electrical ground reference that will be transferred to the energetic item (e.g., when energetic items are grounded to a static or ordnance ground and the test equipment is grounded to the power system ground). The PIAP ground minimizes the electrical potential (voltage) difference between the energetic item and the test set's electrical ground reference during operations. Electrical testing, interrogation, and programming

operations on energetic items with in-line EEDs must utilize a PIAP ground unless scheduling ensures the operation will be completed outside the timeframe of any potential lightning storm/transient weather event.

a. A PIAP system must:

(1) Not be used in conjunction with any other facility ground (e.g., facility, static, or ordnance).

(2) Be comprised of both a PIAP ground and a separately-derived AC circuit.

(3) Be designed and installed with consideration for each AE facility's unique design requirements to ensure electronic test systems do not pose hazards to the energetic item.

(4) Serve a dedicated work zone or operation.

(5) Only be used for electrical testing/interrogation operations.

(6) Be tested every 24 months.

b. The grounding component of the PIAP system must:

(1) Be labeled 'PIAP Ground.'

(2) Be a bare copper conductor of not less than AWG No. 1/0, with each strand of the cable not less than AWG No. 17.

(3) Be electrically isolated (> 20,000 ohms) from all other ground systems (and objects connected to them). The isolation requirement can be achieved using non-conductive conduit to install the ground conductor.

(4) Be bonded to the secondary ground girdle at a single point that is within 3 feet of the electrical system ground bond for the separately-derived AC circuit for the work zone it serves.

(5) Be a bolted connection (in a test well) to the secondary ground girdle so that during testing of the PIAP system, the connection can be broken to verify isolation from all other grounds (>20,000 ohms).

c. The separately-derived AC circuit must:

(1) Be established via the isolation transformer method to create the separately-derived AC circuit.

(2) Have an established fault current ground per NEC 250.30(a).

(3) Be isolated from all other ground systems except the secondary ground girdle.

(4) Be located within 3 feet from the PIAP ground bond.

(5) Be established as near as possible to the work zone it serves.

(6) Have a surge protective device(s) that is both current and compliant with chapter 4.19 of NFPA 780.

5-9.2.2. Power Application Non-Launch Operations without a PIAP Ground System.

5-9.2.2.1. Risk Management through Ground Isolation. Facilities that do not have a dedicated PIAP ground may provide ground isolation for electrical testing of energetic items from static, facility, and ordnance grounds.

⚠ WARNING

Mixing of ordnance electrical safety (static, facility, or ordnance) grounds and the power system ground required for the electrical test set may present a hazard, especially during transient (weather) events.

a. Prior to beginning electrical testing/programming, the energetic item and the electrical test set on the power system ground reference must together be isolated from all other facility grounds (i.e., the energetic item is only grounded through the test set). All structural components of the facility must be assumed to be bonded to the secondary ground girdle, including the reinforcing steel in the concrete floor.

⚠ WARNING

Weapons in direct contact with a concrete floor will have a high impedance bond to the secondary grounding girdle. High impedance bonds enable slower energy transfer, which increases the risk of energetic activation, dudding, or compromised operability within the ordnance or weapon system.

b. The weapon should be sufficiently isolated to ensure that current is restricted and controlled. Examples: electrical isolation pads on weapons stands, non-conductive wheel/casters on weapons carts, non-conductive isolation pads used for contact points when weapons are placed on conductive tables, etc.

5-9.2.2.2. Risk Management Through Scheduling. Electrical testing and interrogation operations that can be scheduled and completed when transient (weather) events are not forecasted reduce risk. Scheduling around these transient events may be used to control risk for facilities without a PIAP ground system. Energetic items must be disconnected from testing/interrogation equipment before hazardous weather arrives.

⚠ WARNING

Risk management via scheduling must account for unforeseen or un-forecasted transient (weather) events that may occur during electrical testing/interrogation operations. Contingency protocols for these situations must be included in pertinent SOPs.

5-9.3. GROUNDING OF NUCLEAR WEAPONS. Grounding of nuclear weapons shall be accomplished as described in applicable Special Weapons Ordnance Publications (SWOP).

5-9.4. AIRCRAFT GROUNDING. During loading or downloading evolutions involving ordnance on rotary or fixed wing aircraft or arming/dearming (if required by the applicable aircraft ordnance handling manuals), the aircraft shall be grounded. Aircraft ground point resistance, testing and marking shall be in accordance with MIL-HDBK-274 (AS).

5-9.5. GROUNDING OF PERMANENT EQUIPMENT. Permanent equipment in contact with conductive floors or tabletops are not considered to be adequately grounded. This equipment shall be permanently connected by a suitable metallic conductor to a permitted ground. However, contact grounds shall be considered adequate for portable equipment, such as chairs and carts, if the resistance to ground for the contact ground is not greater than 250,000 ohms.

5-9.6. IDENTIFICATION OF MISCELLANEOUS CONDUCTIVE ITEMS. Conductive chairs, carts, scales, workbenches, etc., which provide a ground path for personnel or ordnance during handling/mating operations shall be clearly identified as conductive. The resistances of these items must be measured and recorded as described in paragraph 5-5.3.6 when the static ground system is tested.

NOTE

For RDT&E operations, it may be impractical or unnecessary to label all items that are conductive. Only the paths to ground, which bleed static electricity from a process (or process component), need to be identified in this manner. The Explosives Safety Officer (ESO) shall establish a consistent policy for identification of conductive items.

5-9.7. GROUNDING OF ITEMS AWAITING PROCESSING. Ordnance items that are waiting processing; for example items located on shelves in an assembly/test facility; and that have the necessary safety devices installed need not be grounded unless they are within calculated sideflash distance (as described in NFPA 780) of other grounded objects. If this distance cannot be met or cannot be calculated, grounding of the items becomes necessary. Grounding of the items may be via structural ground, the static ground termination point, or ordnance ground. If ordnance ground systems are used for grounding of these items, written positive means shall be in place to ensure that violation of the ordnance ground system does not occur. See paragraphs 5-5.4, 5-5.6 and 5-9.3.

5-9.8. GROUNDING CABLES. Grounding cables are used for the connecting of ordnance to the grounding system for prevention of lightning side-flash and/or electrostatic spark discharge. Grounding cable includes all cables with the reusable clipping or clamping device on one or both ends, including cables inside containers and shipping fixtures. Grounding cables shall not be confused with bonding conductors which have a permanent connection at both ends (for example, bolted or welded. See paragraph 5-8.2.6).

5-9.8.1. Electrical Test Specification. The grounding cable electrical test consists of an electrical resistance measurement from clip-to-clip or from clip-to-connected structure. When testing cables with permanent connections at one end, care shall be taken to test from the clip to the structure (through the permanent connection) to verify the integrity of the permanent connection. Paint on the permanently connected end is acceptable as long as electrical testing proves the paint is not inhibiting the electrical connection.

5-9.8.2. Visual Inspection Specification. The grounding cable visual inspection consists of the following two steps:

a. Inspect the cable, clips, and permanent connections for signs of breakage, excessive wear, frayed conductors, loose or corroded connections, worn or broken clip springs, worn or broken reel assemblies, etc. Connections shall not be taped over. Reel type cables shall be unwound for a proper visual inspection. Reel type cables shall be unwound as much as or further than they are unwound during operational use.

b. Tug on the cable to ensure that it is securely attached to its clips and to the permanent connection (if applicable). Cables with opaque insulation shall be felt for any kinks, sharp bends, or crushing that may indicate damage.

5-9.8.3. Inspection/Test Frequency Requirements. All grounding cables shall have a visual inspection and electrical test after procurement or fabrication, prior to being placed in service. Thereafter, a visual inspection and electrical test shall be performed on every repaired cable before the cable is placed back in service. Proof of the last electrical test must be provided for each grounding cable in use.

5-9.8.4. Resistance Requirements. All grounding cables shall have clip-to-clip or clip-to-structure resistance less than or equal to the design specification or less than 1ohm if no design specification. Reel type cables shall have 25 ohms or less resistance. All grounding cables used for lightning sideflash prevention must have 1 ohm or less clip-to-clip resistance. All failed cables must be immediately removed from service until repairs are performed and the cable passes an electrical test and visual inspection. Electrical testing shall never be performed on cables connected to explosives.

5-9.8.5. Explosives Operating Areas. All grounding cables used in explosives operating areas shall be visually inspected prior to use each day. Standard operating procedures must indicate this inspection requirement.

5-9.8.6. Explosives Storage Areas. A visual inspection shall be performed as a part of periodic storage area inspections (see paragraph 1-4.4.1.d). Cables connected to explosives need not be handled or disconnected for the visual inspection unless damage is suspected or if any corrosion is evident at a connection point.

5-9.8.7. Aircraft Grounding Cables. Aircraft grounding cables are used to ground aircraft during ordnance loading and downloading evolutions, fueling/de-fueling operations, parked evolutions, and all external power applications. Individual aircraft grounding cables shall not be linked together in order to make a longer length. The construction, resistance, and testing of grounding cables used for all aircraft grounding shall be in accordance with MIL-HDBK-274(AS).

5-10. ELECTRICAL SERVICES.

Electrical, security, and communication services to explosives operating buildings and magazines shall be run underground for the last 50 feet. This requirement is satisfied for pad mounted transformers located within 50 feet of a facility if the source and line side circuits are buried underground. The intent is met where the service is brought up out of the ground against the exterior side of the facility. In these instances, the conduit shall be installed directly on the exterior wall of the facility. Proper grounding and bonding of the conduit is required. A main disconnecting switch shall be provided outside the facility with suitable lightning surge arrestors as close as practical to its entrance to the facility, but no further than 50 feet from the service entrance. Lightning surge suppression is described in paragraph 6-7. A

separate ground shall be provided at the electrical service entrance. This ground shall be bonded to the secondary ground girdle as discussed in paragraph 5-5. See also NFPA 70, Articles 501-16 and 501-17. The electrical service to an explosives area shall be arranged so that it can be cut off by switches located at one or more control points outside but immediately adjacent to the explosives area.

5-10.1. POWER LINES. There may be mutual hazards when potential explosion sites (PES) are located near electric supply lines. To protect against these hazards, the following separation requirements apply to all new construction.

a. Electrical lines serving explosives operating facilities shall be installed underground from a point not less than 50 feet away from such facilities.

b. Overhead electrical service lines shall be no closer to a PES of combustible construction, or no closer to an open PES than the length of the lines, unless an effective means is provided to ensure that broken energized lines cannot come into contact with any part of the facility. Three alternatives accepted as countermeasures to ensure that broken energized lines cannot come into contact with the PES or its appurtenances and create a fire hazard, include:

(1) Messenger-supported wiring consisting of an exposed wiring support system using a non-energized wire to support insulated conductors. This system can consist of a messenger wire with rings and saddles for conductor support, a messenger with a field-installed lashing material for conductor support, factory-assembled aerial cable, or multiplex cables using a bare conductor (factory-assembled and twisted with one or more insulated conductors, such as duplex, triplex, or quadruplex type of construction).

(2) A ground-fault circuit-interrupter, which causes a disconnecting means to open all ungrounded conductors of the faulted circuit. This protection is provided at current levels less than those required to protect conductors from damage through the operation of a supply circuit overcurrent device.

(3) A weighted triangle line separator to ensure broken lines will be pulled down instead of allowing the energized line to contact the PES.

c. Electrical distribution lines carrying less than 69 Kilovolts (kV), the towers or poles supporting these lines, and unmanned electrical substations shall be no closer to explosives exposures than public traffic route distances.

d. Electrical transmission lines, those carrying 69 kVs or more, and the towers or poles supporting them shall be located no closer to PESs than:

(1) Inhabited building distance if the line in question is part of a grid system serving a large off-base area, and

(2) Public traffic route distances if loss of the line will not create serious social or economic hardships.

NOTE

Public traffic routes and inhabited building distances shall be based on airblast overpressure only. Fragment distances need not be considered.

e. Electric transmission lines which can be interrupted without loss of power; that is, power is rerouted through other existing lines and/or networks, will be separated from explosives sites in accordance with paragraph 5-10.1.b.

5-10.2. UNINTERRUPTIBLE POWER SOURCES. An uninterruptible power source shall be provided for explosives operations whenever the loss of power will result in a more hazardous condition.

5-10.3. GROUND FAULT INTERRUPTERS. When constructing and renovating facilities, all 120 Volt (V), single phase, 15, 20 and 30 A receptacle outlets installed outdoors shall have approved ground fault circuit protection. Ground fault circuit interrupters shall also be provided in areas where the deck is wet or where other conditions creating a high degree of electrical hazard exist. These devices virtually eliminate electrical shock hazards presented by line-to-ground fault currents and leakage currents by removing power from the faulty circuit. Ground fault circuit interrupters can often be activated by spurious electrical noise. Hence, these devices shall not be used on circuits that provide service to critical equipment and processes, lighting in explosives operating buildings, or lighting required to provide a safe exit from any building.

5-10.4. ELECTRICAL SERVICE EQUIPMENT. In most cases it is not necessary to locate electrical service equipment, large motors, or any type of spark-producing electrical equipment in areas categorized as hazardous locations. Whenever possible, the location of any electrical hardware should be external to hazardous (classified) locations. They should be located outside of the room or building and connected to the hazardous (classified) area only through mechanical glands or apertures which adequately seal against the entrance of hazardous material into the location where the motors or support components are positioned. When it is essential to locate the hardware within hazardous (classified) locations, the hardware must be listed by UL or another recognized testing laboratory as acceptable for the risk involved. The electrical hardware installation shall meet the requirements of the latest edition of the NEC, NFPA 70, for the specific hazards. For maximum flexibility, it is suggested that electrical motors and support hardware have dual classification, for example, Class I, Group D and Class II, Groups E, F, and G. Motor starters, circuit breakers, safety switches, service entrance switches, and speed controllers shall be installed on steel racks that should be on the outside wall of a hazardous (classified) location or in a separate building. All connections shall be via metallic conduit with sealed fittings to prevent possible communication of flame or arcs into the hazardous (classified) location.

5-10.4.1. Portable Engine-Driven Equipment. Portable engine-driven generators may be used as a source of electric power. When this type of equipment is used, the exposed, non current carrying, metallic frame and parts shall be grounded in accordance with the NEC or manufacturers instructions. In addition, the following requirements shall be observed when supplying power to magazines or explosives operating facilities.

a. The generating unit shall be placed at least 50 feet from the PES. On piers or wharves, the separation is measured from the ammunition handling or staging area. Procedures for refueling portable engine-driven electrical generators are given in paragraph 4-1.24.

b. The ground area around the generator and between the generator and the hazardous (classified) location shall be clear of debris and other combustible materials.

c. The exhaust from the generator shall not impinge on grass or any other combustible material.

d. The power cord connecting the generator to the load shall be protected/positioned as to prevent trucks or personnel from running over or otherwise damaging the cable.

e. No cable-to-cable splices shall be made within the magazine, explosive operating facility, or other hazardous (classified) location. Flexible cables shall be the approved three wire, service types with three-prong plugs and connectors.

f. In the event of an electrical storm, the generating unit shall be turned off and all cables removed from the magazine or explosives operating facility. No refueling operations shall be conducted when an electrical storm is in the vicinity of the operation. See paragraph 6-10.

5-10.4.2. Extension Lighting. Portable extension lights may be used in areas where ammunition and explosives are present, provided the following requirements are met:

a. Their use is authorized by local written operating procedures when the installation of permanent lights is not prudent.

b. The local written operating procedure requires a pre-operational and periodic (not to exceed a shift) inspection of the lights and associated wires for damage.

c. They are designed and installed in accordance with NFPA 70 and NEC.

d. They have an external power source.

e. They are fitted with exterior globes and adequate guards to protect the globes.

f. The power supply wires and lights are installed/ positioned: to prevent damage to them from personnel and/or equipment; and to preclude contact with any vehicles, movable equipment or ammunition and explosives.

g. They are installed/positioned so that the power supply wire does not support them.

h. They are installed/positioned to prevent the heating of any flammable items.

i. All spliced or cable-to-cable connections shall be kept at least 50 feet away from any ammunition and explosives area, unless the area is equipped with an interlocking-type receptacle that is approved by the latest edition of the UL Hazardous Location Equipment Directory.

5-10.4.3. Electrical and Electronic Devices. Any and all electrical and electronic devices, including flashlights, lanterns, computers, etc. must be listed by UL or other recognized testing agency for use in the specific hazardous area. Laptop computers are authorized for use in storage, build-up, and assembly areas when ammunition and explosives are present with the following restrictions.

a. The device shall be certified to meet Federal Communications Commission (FCC) Class B limits.

b. Refer to NAVSEA OP 3565 Volume 2 to determine the safe separation distance from any FCC Class B Digital device and ordnance.

c. The devices shall operate on battery power or A/C line power. When connected to the A/C line power via the power cord, the batteries must be removed.

5-10.4.4. Maintenance of Electrical Equipment. Electrical equipment and installations must be inspected in accordance with manufacture instructions or during the six month visual inspection described in paragraph 5-8.3, and maintained periodically by qualified personnel. Inspection authorities

and maintenance personnel shall exercise extreme care when inspecting and performing maintenance on electrical installations in hazardous (classified) locations. All explosives contamination shall be removed from the equipment before maintenance is performed. Insulating floor mats and bench covers shall be used as deemed necessary by the local activity to avoid electrical shock hazards. A written record of inspections and maintenance work performed shall be kept for a minimum of six equipment/facilities inspection cycles.

⚠ WARNING

Exposed power circuits will not be worked on in a building or room containing exposed explosives.

5-10.4.5. Repairs to Electrical Equipment. Repairs and replacements shall be made only by qualified personnel authorized to do such work. When equipment may have been exposed to contamination from explosives, the contamination must be removed or neutralized before repairs are started. When repairs are completed, qualified personnel shall inspect the equipment and shall keep a record of the work. Unless otherwise specified by the equipment's technical manual, these records shall be kept for a minimum of five years or the life of the electrical equipment, whichever is less.

CHAPTER 6
LIGHTNING PROTECTION

6-1. GENERAL.

There is no evidence to indicate that any type of lightning protection system can prevent occurrence of a lightning strike. The fundamental principle in protection of life and property against lightning is to provide a means by which a lightning discharge can enter or leave earth without resulting damage or loss. A low impedance path must be offered which the discharge current will follow in preference to all alternative high impedance paths offered by building materials. When lightning follows higher impedance paths, damage may be caused by heat and mechanical forces generated during the passage of the discharge. Most metals, being good electrical conductors, are virtually unaffected by either heat or mechanical forces if they are of sufficient size to carry the current that can be expected. The metal path must be continuous and shall form a two-way path from each air terminal horizontally or downward to connections with ground terminals. A nonferrous metal such as copper should be used as the conductors to assure integrity of the lightning conductor for an extended period of time. The National Fire Protection Association (NFPA) Lightning Protection Code, NFPA 780 as supplemented by requirements of this chapter, provide minimum acceptable requirements for the protection of structures used for developing, manufacturing, testing, handling, storing, maintaining, demilitarizing or disposing of ammunition and explosives from effects of direct and indirect lightning strikes. NAVFAC P-272 and MIL-HDBK-419 provide additional information on the installation of lightning protection systems for Navy explosives facilities.

6-2. STORM WARNING SYSTEMS.

A lightning warning system shall be required to ensure that ordnance operations that cannot be safely continued during the threat of lightning activity can be terminated with enough time to evacuate personnel to public traffic route distances. Lightning warning systems can provide a supplement to lightning protection systems, for the protection of personnel, ordnance and facilities from the threat provided by lightning activity. They can be used to reduce the amount of facility downtime due to lightning by providing information necessary to effectively plan hazardous operations. A warning system can be comprised of a pre-strike only system, spherics only system, or a combination of both systems.

6-2.1. PRE-STRIKE WARNING SYSTEMS. Lightning warning systems that monitor atmospheric electric field or field gradient provide warning of potential lightning activity before a discharge occurs. Pre-strike warning systems are the only systems that can indicate that the local atmosphere is conducive for a lightning event to occur. Lightning is seldom produced where electric field gradients are below 2,000 volts per meter. During extremely dry weather, heavy fog, or in polluted air, electric field gradients can exceed 2,000 volts per meter without threat of lightning activity. However, during extremely dry weather there is an increased threat of electrostatic discharge hazards. Accurate advance warning of lightning activity from storms that develop in the vicinity of a facility is limited due to the life-time of the storm cells being monitored. If the alarm criteria is based only on a 2,000-volt per meter electric field gradient, advanced warning could be as little as five minutes. Warning time can be increased significantly by looking at instantaneous changes in the electric field gradient produced by lightning activity. If reliable warning times of greater than 30 minutes (for both mature storms and those that develop directly overhead) are required, more sophisticated weather prediction techniques must be

used. Pre-strike systems currently available include systems based on measurement of the electrical potential energy, such as Electric Field Mills.

6-2.2. SPHERICS WARNING SYSTEMS. Spherics lightning warning systems are secondary or supplemental systems that detect radiated electromagnetic signals produced by a lightning discharge. Such systems can detect lightning activity in excess of 200 miles. The movement of electrically active storms can be tracked as they move into the area. However, these types of lightning warning systems can only detect the occurrence of lightning activity, and therefore, cannot provide any warning of storms developing directly overhead. Two such types of systems are the National Lightning Detection Network (NLDN) and the Lightning Detection and Ranging (LDAR).

6-2.3. IMPLEMENTATIONS OF SYSTEMS. The amount of advance warning required for ordnance operations depends on the sensitivity of the operations involved and the time required to terminate the operations. This information is used to determine whether one or both of the systems is required for an installation. The type of system required should be selected based on its ability to provide the warning time necessary. Installations with lightning warning systems shall establish specific criteria in their hazardous weather plan or destructive weather bill, detailing how lightning warning hardware will be used in terminating ordnance operations at the approach of a thunderstorm. Advance warning system support and/or procurement funding should be the responsibility of each installation when the Operational Risk Management analysis dictates the need for such systems. The destructive weather plan should detail the specific criteria, such as what operations should be shut down, who remains behind to shut it down, how it is to be shut down, and specific instructions for evacuation of personnel, and also the criteria for starting operations up again.

6-2.3.1. Pre-Strike Systems. Pre-strike systems should be used to provide advanced warning of lightning conditions at facilities where sensitive ordnance operations are conducted, unless the installation commander through a risk analysis and acceptance determines that the advance warning provided by a pre-strike system is not required. This risk analysis and acceptance must be included in the installation hazardous and destructive weather plan. Instantaneous changes in the electric filed gradient above 2000 volts per meter, or an increase in frequency of the changes should be used to terminate operations involving items sensitive to indirect effects of electromagnetic pulse from near strike lightning.

6-2.3.2. Spherics Systems. Spherics systems can provide and track lightning location information of mature storm systems that may be moving into the area. Historical data of lightning-producing storms may be obtained from the installation local or regional weather office.

6-2.3.3. Guidance for Performing Operational Risk Management Analysis with regard to Determining the Installation Lightning Warning Systems Requirements. Operational Risk Management (ORM) analysis can be used to determine if pre-strike warning is required to mitigate the associated risk involved with the individual installations ordnance operations. ORM risk analysis should be performed using existing ORM directives with the probability that a lightning incident that initiates ordnance in question will occur, and the resulting risk to the personnel, facility and material is considered. Operations involving ordnance can generally be broken into risk categories: low risk and high risk.

a. Low Risk Operations. Examples of low risk operations are:

(1) Handling, outside the approved shipping container, cartridge actuated devices (CAD), propellant actuated devices (PAD), or small arms and grenades not containing a high explosive.

(2) Storing, handling and transporting devices containing electroexplosive devices (EED) and a high explosive in an approved shipping container.

b. High Risk Operations. Examples of high risk operations are:

(1) Mixing and handling bulk explosives.

(2) Making igniter and detonator connections.

(3) Loading and unloading, and/or arming/dearming electrically initiated ordnance; e.g., missiles, rockets, or gun ammunition.

(4) Handling, outside the approved shipping container, EEDs that contain propellant and a high explosive.

6-3. POLICY FOR LIGHTNING PROTECTION.

Lightning protection is required for all ordnance handling, operating and storage facilities or areas. To provide minimum protection for structures against direct lightning strikes, the following requirements must be fulfilled:

a. An air terminal must be provided to intercept lightning at 100-foot or less striking distance arc;

b. A path for frequencies up to 5 megahertz must be established that connects this terminal to earth with such low impedance that the discharge follows it in preference to any other;

c. A low resistance connection must be made with the earth electrode subsystem;

d. A low impedance interface must be established between the earth electrode subsystem and the earth;

e. Sideflash and surge protection must be provided.

f. A Rolling Sphere Model analysis of the lightning protection system design for new mast and catenary systems must be provided that rolls the sphere from every possible approach horizontally and vertically such that the sphere does not contact the structure in accordance with NFPA 780.

These conditions are met when a lightning discharge is permitted to enter or leave the earth while passing through only conducting parts of a structure.

1-1.1. EXCEPTIONS. For explosive operating buildings and existing ammunition storage facilities, lightning protection may be omitted in the following cases by the commanding officer of the activity, with concurrence from Naval Ordnance Safety and Security Activity (NOSSA). Lightning protection may not be omitted for new ammunition storage facilities. If lightning protection is not installed on a facility, the reasons for not protecting the facility and risk acceptance by appropriate activities shall be documented and kept with related site approval documentation. Bonding and surge suppression requirements still apply.

g. Explosives operations served by an adequate warning system which has been incorporated into the facility's destructive weather plan, where operations can be terminated before a thunderstorm is within 10 miles of the installation, where all personnel can be evacuated to public traffic route distance, and where the expected damage due to a lightning strike will not have a serious impact on the mission

of the installation. Public traffic route distance is based on airblast overpressure only (minimum fragment distances do not apply), or to a location that provides equivalent protection.

h. Explosives operations in which personnel are not expected to sustain injury and where there will be a minimal economic loss to the structure, its contents, or the surrounding facilities.

i. Operations involving ammunition and explosives or those involving items or systems having explosive components that cannot be initiated by lightning, as determined by documented tests and analyses. Facilities where such operations are conducted shall be constructed of noncombustible materials.

j. Flightline PESs as defined in paragraph 6-8.2.3.3.

6-4. LIGHTNING PROTECTION SYSTEMS.

A lightning protection system consists of an air termination network, down conductors, primary and secondary grounding systems and bonding conductors to interconnect conductive bodies attached to or inside the structure. Refer to figure 5-4 for interconnection among the system components.

6-4.1. AIR TERMINATION SYSTEMS. An air termination system is that part of the lightning protection system designed to provide a primary attachment point for a lightning strike. There are five types of air termination systems approved for the protection of explosives areas: Faraday shield, mast, catenary, integral system, and alternate systems.

6-4.1.1. Faraday Type System and Faraday Shield. The best method to protect extremely sensitive operations from all sources of electromagnetic radiation (not just lightning) is to enclose the operations or facility inside a faraday cage. However, a faraday cage is difficult to construct and is economically justified only for “one-of-a-kind” facilities where extremely sensitive operations warrant the level of protection it provides.

6-4.1.1.1. A faraday cage is a lightning protection system where the volume is enclosed by a heavy metal screen or a continuous metal structure with all metallic penetrations bonded. The lightning current flows on the exterior of the structure, not through the interior. A faraday shield is a lightning protection system that is not an ideal faraday cage, but is formed by a contiguous conductive matrix that is properly bonded and grounded. Examples include:

a. Electrically continuous steel arches and reinforcing bars of the concrete end-walls and floors of steel arch magazines.

b. Reinforcing bars of earth-covered magazines.

c. The metal shell of pre-fabricated portable magazines and metal buildings.

NOTE

Use of a strike termination system on these structures provides a preferred attachment point for lightning and may prevent structural damage, such as concrete spall or metal burn through, from direct lightning attachment.

6-4.1.1.2. If the shield material acts as a primary attachment point, it must meet the requirements of NFPA 780. The following pertains to earth-covered magazines (ECM):

a. Existing construction that meets metallic (Faraday-like) cage requirements of NFP 780 paragraph 8.3.2 should have strike termination devices.

b. New construction must meet metallic (Faraday-like) cage requirements of NFP 780 paragraph 8.3.2 and include installation strike termination devices per NFPA 780 paragraph 8.7.

c. Major repairs and modifications involving facility elements covered by explosives safety criteria (that is, lightning protection, grounding, emergency exits, sprinkler systems) or affect the inherent safety of the structure, and that meet metallic (Faraday-like) cage or shield requirements of NFPA 780 paragraph 8.3.2 must include installation of strike termination devices per NFPA 780 paragraph 8.7.

6-4.1.1.3. The structural components of buildings must be bonded together (that is, the floor, walls, and ceiling must be bonded at regular intervals along their interface) via built-in attachments such as rebar welded or wired together, or by adding external bonding wires between components. The components must be bonded at least every 5 feet (1.5 meters). This is a nominal distance based on limited testing of explosives facilities. Bonding distances may vary based on facility design. Use of other than nominal bonding distance requires an electromagnetic characterization of the facility's transfer impedance potential to determine the specific bonding distances.

6-4.1.2. Mast System. A mast-type lightning protection system uses masts (either metallic, concrete, or wood) that are remote from the structure to provide primary attachment point for a lightning discharge. Figure 6-1 shows the zone of protection afforded by a single mast system. If the mast is constructed of wood, an air terminal or metal cap connected to two down conductors must be installed. These down conductors shall be placed symmetrically (on opposite sides, 180 degree separation ±10 degrees) about the mast. Figure 6-2 shows the required two connections of the metal masts to the primary ground girdle. The height (and spacing, if more than one is necessary) of the masts must be adequate to ensure that the entire structure is enclosed within a zone of protection as defined on NFPA 780 for a 100-foot striking distance. The minimum diameter of the mast shall be 5/8-inch and must be sturdy enough to withstand the expected wind and ice loads.

6-4.1.3. Catenary (Overhead Wire) System. A catenary lightning protection system consists of grounded, elevated, horizontal, metallic wires stretched between masts that surround a structure. Each catenary wire shall be a continuous run of at least AWG No. 1/0 copper or copper-coated steel cable suspended above the protected structure and connected at each end to the primary ground girdle (or ground rods if a girdle is not necessary. See paragraph 6-5.1.2 for information on cases where a girdle would not be required.). The overhead cable shall be supported by masts to ensure a minimum separation distance of 6 feet from the protected structure, including any projections. This separation shall be increased by 1 foot for every 10 feet after the first 50 feet of catenary wire run parallel to the structure. The supporting mast shall be separated from the structure by at least 6 feet. The separation shall be increased by 1 foot for every 10 feet of structure height above 50 feet. Figure 6-1 shows the zone of protection afforded by a catenary system as defined in NFPA 780.

6-4.1.4. Integral System. An integral system uses air terminals and conductors mounted directly on the structure to be protected. Minimum requirements for an integral system are:

a. The design and installation of the system shall meet the requirements of NFPA 780. New facilities or major modifications to existing facilities that have metal components (metal roof, structural members, or siding) should NOT have an integral system; instead, design and install a mast or

catenary system. Otherwise, the large metal components compete with local air terminals and detract from overall lightning protection capability.

b. All air terminal spacing described in NFPA 780 shall be modified as necessary to provide a zone of protection defined by the 100 feet striking distance, including protection of lower roofs by higher roofs on buildings less than 50 feet tall.

c. Since integral system material requirements differ for structures having a height greater than 75 feet, close attention to NFPA 780 requirements must be maintained to assure correct materials such as thickness, diameter or size, are used.

d. All air terminals must be provided with two-way path to ground unless specifically exempted by NFPA 780.

e. A minimum of two down conductors shall be provided on all structures. Structures exceeding 250 feet in perimeter length shall have an additional down conductor for every 100 feet of perimeter length or fraction thereof. All down conductors shall be connected to the facility's secondary ground girdle.

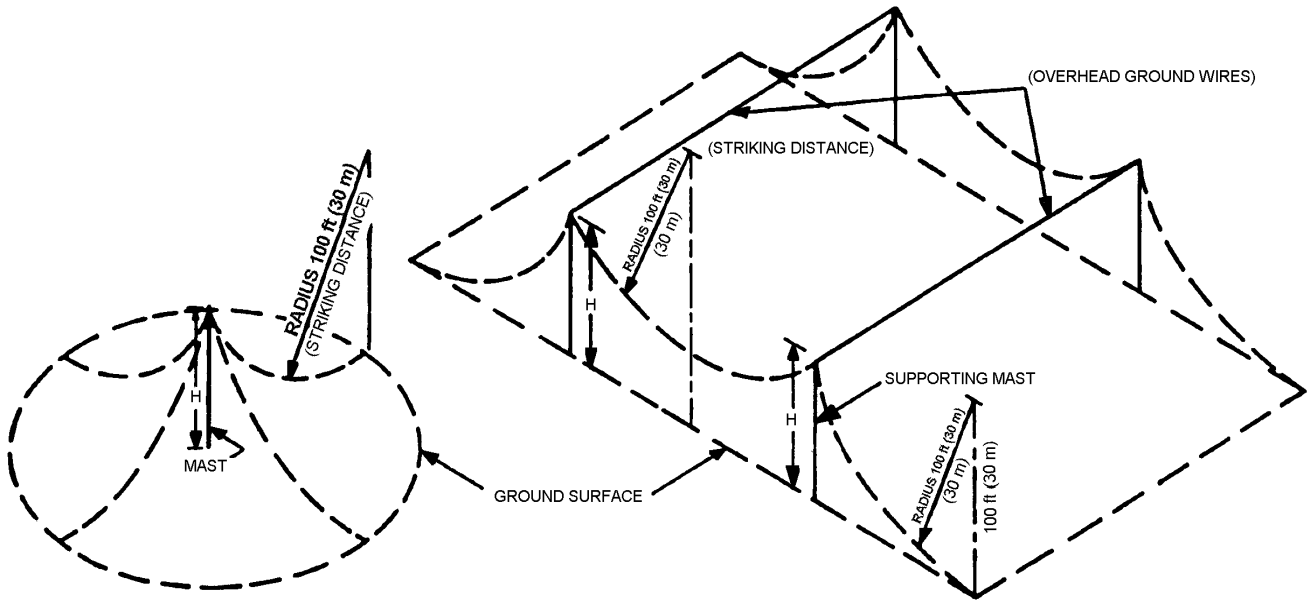

SINGLE MAST ZONE OF PROTECTION DEFINED BY DASHED LINES

OVERHEAD GROUND WIRES ZONE OF PROTECTION DEFINED BY GROUND WIRE(S) AND DASHED LINES

Figure 6-1. Zone of Protection for Mast Height "H"[2]

f. Materials selected for the integral system shall be resistant to corrosion. No combination of materials shall be used that forms an electrolytic (galvanic) couple of such nature that in the presence

[2] Reprinted with permission from NFPA 780-1983, Lightning Protection Code, Copyright 1983, National Fire Protection Association, Quincy Massachusetts 02269. This reprinted material is not the complete and official position of the NFPA on the referenced subject, which is represented only by the standard in its entirety.

of moisture, or other hostile environment corrosion is accelerated. If aluminum is used, care shall be taken to not place the aluminum in earth or elsewhere where it will rapidly deteriorate. Copper cannot be placed in contact with aluminum (such as siding), and vice versa. NFPA 780 provides additional guidance.

6-4.1.5. Alternate System. An alternate LPS wherein structures can provide lightning protection for ordnance operations without posing a hazard. These structures will have to be specifically designed for the purpose of lightning protection. NOSSA concurrence is required.

6-4.2. DOWN CONDUCTORS. Lightning protection system down conductors shall meet the minimum requirements of NFPA 780. They shall interconnect all air terminals and shall form a two-way path from each air terminal horizontally, downward, or rising at a rate not exceeding three inches per foot to connections with the primary ground system. The material shall be AWG No. 1/0 copper cable with no individual strand of the cable being smaller than AWG No.17 (0.045-inch diameter). Flat wires of equivalent resistance, commonly used in other countries, may be substituted at activities outside the United States. The down conductors shall be spaced as widely as possible. When installed on a mast, they shall be installed symmetrically about the mast. If a guy wire is installed on a mast, this may be included as one of the down conductors, provided it is connected to the girdle and meets the minimum bonding resistance requirements.

6-5. GROUNDING.

This section provides specific grounding requirements necessary for lightning protection of ordnance facilities. Grounding systems normally consist of a lightning protection and secondary grounding system. The section below provides specific requirements for lightning protection grounding systems, as well as interconnections with secondary grounding systems.

6-5.1. LIGHTNING PROTECTION GROUNDING SYSTEM. The purpose of a lightning protection grounding system is to dissipate lightning current into the earth by providing a low impedance path to earth. Lightning protection system down conductors shall be terminated onto a buried copper or copper-clad, steel ground girdle. This AWG No. 1/0 or larger cable creates a continuous loop which interconnects the down conductors with ground rods that are provided for the lightning protection grounding system.

6-5.1.1. Air Termination System. The components of an air termination system shall, via down conductors, be terminated onto a bare copper or copper-clad conductor of not less than AWG No. 1/0. The size of any strand of the cable shall not be less than AWG No. 17. In areas where corrosion may be excessive, larger cables may be required. In these areas, copper cable is preferred over copper-clad because of possible corrosion problems if the copper-cladding is damaged. This cable shall form a closed loop around the area to be protected. The resistance to ground of this ground girdle shall be 25 ohms or less. If this resistance cannot be achieved, contact NOSSA for assistance. Exothermic welds or compression fittings where 10,000 pounds per square inch of pressure or more is used are acceptable. It is usually necessary to drive ground rods around the perimeter of the cable, connected to the girdle by a similar size and material cable. The rods, see paragraph 5-4.1.1, should normally be driven at no less than 10- foot intervals and spaced so they are uniformly distributed around the area to be protected. The degree that rods reduce resistance of the system is dependent on the depth to which they are driven and to a lesser extent on the diameter of the rods. Where rock is close to the surface of the ground, driving rods may be impractical. In such cases, it may be necessary to install a radial counterpoise or to drill a well to obtain the required resistance to ground. Ground plates may be used in lieu of ground rods where the soil is less than 1 foot deep. Resistance to ground varies with the seasons of the year because soil resistance is a function of temperature and moisture content. This

must be taken into account when the system is constructed. It is good practice to reduce the system's resistance to ground as much as possible during construction to ensure against future costly alterations.

6-5.1.2. Catenary System. See figure 6-2. For a two mast catenary system where no structures are involved, primary and secondary ground girdles are not required. However, a minimum of two ground rods must be provided at each termination point. When structures are protected by a two mast caterary system, a minimum of two ground rods must be provided at each termination point and connected to the structures secondary ground system via the shortest distance. When more than two masts are used, a ground girdle shall be installed in addition to the structure's secondary ground system.

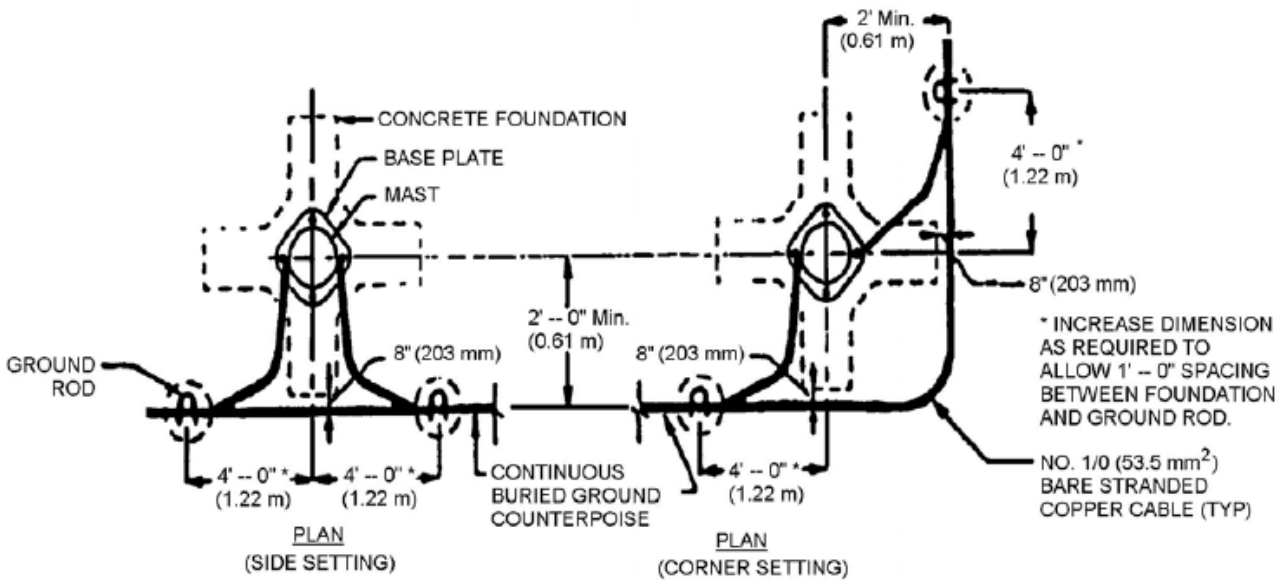

Figure 6-2. Connections of Metal Masts to the Ground Girdle

6-5.1.3. Integral System. The components of the integral lightning protection system shall be connected via down conductors to the facility's secondary ground girdle. Minimum air terminal height shall be 24 inches and minimum diameter is 5/8-inch. These are defined by the height of the facility to be protected and the materials used for the system. The secondary ground system shall comply with the requirements of chapters 5 and 6.

6-5.2. SECONDARY GROUNDING SYSTEM. The secondary grounding system consists of a buried copper or copper-clad, steel conductor of AWG No. 1/0 or larger that interconnects all of the grounds and conductive bodies attached to, or inside the structure that are to be bonded to a grounding system. A minimum of protection required for all structures is provided from the effects of lightning by establishing a common grounding point for any item in the structure that requires grounding. The secondary grounding system to which the primary lightning protection shall be connected is described in paragraph 5-5.

6-5.3. INTERCONNECTION OF GROUNDING SYSTEMS. The primary and secondary ground girdles shall be bonded together for all ordnance facilities. Figure 5-4 provides a sketch of a typical

grounding system installation for an operating building. A minimum of two bonds between the girdles shall be provided at opposite sides of the facility. Additional bonds may be required for larger perimeter structures. It is suggested that a bond be provided for every 250 feet of secondary ground girdle. The bonds between the girdles shall be made with AWG No. 1/0 or larger copper or copper-clad steel cable or equivalent. The interconnecting cable should be the same size and material as the girdles. The interconnections should be made at a test well so the bond can be disconnected for testing.

6-6. BONDING.

Bonding of metallic bodies and lightning protection ground systems is required to ensure that voltage potentials produced by lightning currents are similar throughout the structure and therefore no large potential differences exist which are sufficient to produce a sideflash inside the protected structure.

6-6.1. DIRECT BONDING TECHNIQUES. The description of direct bonding techniques is given in paragraph 5-6.1. Soft soldering is not permitted for interconnections between elements of lightning protection networks by either the NFPA 780 or the Underwriter's Master Labeled System and is therefore is not permitted at Navy or Marine Corps installations.

6-6.2. INDIRECT BONDING. The description of indirect bonding techniques is given in paragraph 5-6.2. Bond straps are used to connect metal objects to lightning down conductors to prevent side-flash. The connection of the bond strap is made by using one of the techniques discussed in direct bonding, see paragraph 5-6.1.

6-6.3. INTERCONNECTION OF CONDUCTIVE BODIES. All metal masses in the vicinity of a lightning protection system (that is, mast, catenary, or integral system) must be assessed for sideflash hazard. Grounded and/or ungrounded metal masses pose a sideflash hazard if they are positioned too close to components or any metal object bonded to the lightning protection system. To minimize the sideflash hazard, metal masses located within the calculated separation distance near lightning protection system down conductors must be bonded to the lightning protection system or placed outside the side flash separation distance. It is not necessary to ground metal masses internal to a structure protected by a lightning protection system and/or with a structural ground system constructed as described in paragraph 5-5.5, unless the following are present: flammable gases, flammable liquids, exposed explosives, exposed EEDs sensitive to ESD, damaged ordnance items that could have these faults, damaged ordnance items with exposed propellant, or damaged items leaking hazardous materials.

NOTE

Areas interior to a structure where ordnance is not processed (for example, administrative areas, restrooms, etc.) are excluded from sideflash separation requirements, regardless of construction of structural ground system or lightning protection system.

The sideflash separation distance shall be determined by:

a. Assessing the sideflash distance calculations as described in paragraph 6-6.4 for the given situation, or

b. Using the default distance of six feet.

Any metal masses within the sideflash separation distance shall be bonded to the lightning protection system, facility or primary/secondary ground girdle. The bonding material shall be at least an AWG No. 6 copper wire and can be accomplished through structural steel. Any metal masses that are less than 400 square inches or less than 1000 cubic inches (for example, 10 inches x 10 inches x 10 inches) are not required to be bonded.

6-6.3.1. Railroad Tracks. Railroad tracks contribute to lightning hazards, not from the standpoint of taking a direct strike, but from the fact that should a strike occur near or on the tracks outside the zone of protection, the tracks can carry the lightning currents long distances. Railroad tracks within six feet of the primary grounding system shall be bonded to it at the closest point of the grounding system. If the railroad tracks are used as conductors carrying electrical signals, they shall have insulating joints, as specified in the American Railway Engineering and Maintenance of Way Association Manual for Railway Engineering, just outside where they cross the primary girdle (both entering and leaving). The electrical currents may bypass the area via conductors routed outside the grounding girdle. If no girdles are present, the tracks shall be bonded to a ground rod. Railroad tracks adjacent to or entering buildings involved in ammunition and explosives operations shall be grounded. All railroad tracks on wharves and piers used for ordnance staging shall be grounded to the primary grounding system. Railroad tracks adjacent to earth-covered magazines and those in classification yards must be grounded if they are within six feet of a lightning protection system. Figure 6-3 provides details of bonding and grounding of railroad tracks.

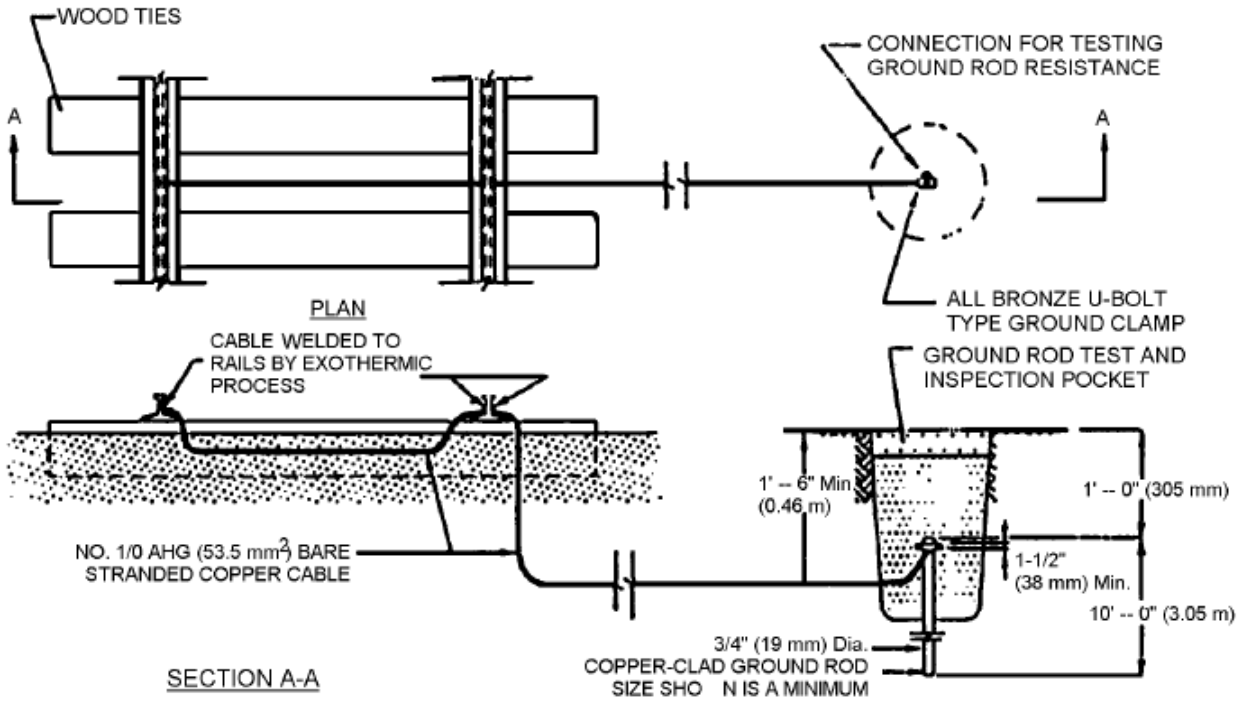

Figure 6-3. Grounding and Bonding of Railroad Tracks

6-6.3.2. Fences and Gates. The bonding of fences and gates is for protection of explosives loaded vehicles passing through gates and protection of personnel who may come into contact with the fence or gate. Fences or freestanding gates shall be bonded across all gates and other discontinuities. This bond should be accomplished by an underground connection from gatepost to gatepost. All gateposts

shall be grounded and each gate shall be bonded to the grounded gatepost. In the instance where the fence line is short or non-existent (<100 feet), the bonding from gatepost to gatepost is not required. A fence shall be grounded at points 150 feet on each side of overhead power line crossings, and at 150-foot intervals along the fence when overhead power lines are directly overhead and run parallel to the fence. The overhead power line is considered directly overhead if it is run within 50 feet or the height of the pole, whichever is greater. This value comes from the way in which the electrical cable will fall if broken. Fences shall be grounded at places where personnel may routinely touch the fence and areas where structures and materials are within 6 feet of the fence. All metal masses within sideflash distance to a fence or gate must be bonded to the fence or gate in accordance with the requirements of paragraph 6-6.3. If the fence consists of wooden posts and horizontal metal strands only, down conductors shall run the full height of the fence and be securely bonded to each wire so as to be electrically continuous. Fences, gates, and gateposts of fences shall be tested every 24 months in accordance with the requirements of paragraph 6-9.2. Resistance to earth measurements shall be made on at least one gatepost (for each gate) to ensure a resistance of 25 ohms or less. Bonding resistance tests shall be made from gatepost-to-gate on each side and across the gateposts to ensure a bonding resistance of 1 ohm or less. In those cases where the fence comes within 6 feet of a grounded structure or lightning protection system, bonding measurements shall be made to ensure a bonding resistance of 1 ohm or less between the items.

6-6.3.2.1. Plastic Coated Fences. Where chain link fence is plastic coated on metal posts, each post shall be connected at the top by means of a rigid support bar or wire positively bonded (metal-to-metal) in order to ensure grounding. Where the fence is connected to the gatepost, the plastic should be cut so as to make electrical contact with the post. This post should then be grounded via a ground rod as described in paragraph 6-6.3.1. Plastic coated fence shall not be used where overhead power lines run parallel to the fence.

6-6.3.2.2. Three or More Parallel Fences. The following requirements apply to three or more parallel fences. Outside fences shall be bonded and grounded in accordance with paragraph 6-6.3.1. All gates and posts, regardless of location shall be bonded and grounded in accordance with paragraph 6-6.3.1. Interior fences, excluding the innermost fence (that is, the fence closest to the facility) need only be grounded and bonded at gates. To prevent personnel shock, fence maintenance, inspection, and testing shall be suspended during thunderstorm activity.

6-6.3.3. Exterior Overhead Pipe Lines. Since metallic pipes, including aboveground steam, water, and air conditioning lines, can be effectively grounded prior to entering a facility, burial of them is not necessary. These services shall be grounded where they cross the primary and secondary ground girdles. They should also be bonded to the facility ground where they enter the facility.

6-6.3.4. Roll-up Doors. The intentional bonding of the individual slats of these types of doors is extremely difficult and often ineffective. The door frame shall be bonded to the facility's secondary ground system as well as the metal frames of any electrical equipment (such as motors). All ordnance shall be placed at least calculated side flash distance from the door.

6-6.3.5. Guyed Lightning Protection Systems. Each metal guy cable shall be bonded at its lower end to the primary or secondary grounding system via an underground connection. For a two mast catenary system where no structures are involved, and primary and secondary ground girdles are not present, each guy cable shall be grounded at its lower end via one or more ground rods. Each metal guy cable shall be bonded at its upper end to the structure it supports if it is constructed of a conductive material, and to the catenary conductor or down conductors.

6-6.4. SIDEFLASH DISTANCE CALCULATIONS. Sideflash is an electrical spark, caused by differences of potential, occurring between conductive metal bodies or between conductive metal bodies and a component of the lightning protection system or ground. The bonding of grounded metal bodies is determined by their proximity to the lightning protection system components; that is, the sideflash distance. The formula for the calculation of sideflash distance is given in NFPA 780. The formula is:

$$D = \frac{h}{6xn} x K_m$$

where: D = sideflash distance

h = vertical distance between the bond being considered and the nearest lightning protection system bond

The value of n is related to the number of down conductors that are spaced at least 25 feet apart and located with a zone of 100 feet from the bond in question and is calculated as follows:

n = 1 for one conductor within 100 feet

n = 1.5 for two conductors within 100 feet spaced at least 25 feet apart

n = 2.25 for more than two conductors within 100 feet spaced at least 25 feet apart

K_m = 1 if the flashover is through air

K_m = 0.5 if the flashover is through dense material (concrete, brick, wood, etc.)

6-7. SURGE SUPPRESSSION.

Lightning protection systems designed to protect structures housing explosives must protect against induced surges on power, communication, data and process control lines, as well as any other electrical conductor entering or exiting the structure, in addition to direct lightning strikes to the structure. Nearby lightning discharges will produce electromagnetic pulses that can be coupled into conductors servicing the structure. These induced surges can be adequate to cause dangerous over-voltages, resulting in fires or damage to critical electrical hardware.

6-7.1. GENERAL THEORY OF LIGHTNING ARRESTERS. All lightning arresters provide a means by which lightning currents may enter or leave the earth without passing through undesirable paths of high resistance. There are three common types of lightning arresters: varistors, gas discharge devices, and semiconductors. Each have advantages and limitations in the areas of current capability, voltage limiting ability and their effects on the normal operation of the circuits being protected. No one type is suitable for all applications.

6-7.1.1. Varistors. The name varistor, for variable resistor, is broadly used to cover a variety of resistance devices whose electrical resistance varies as a function of the applied voltage. Varistors are considered soft voltage limiters because their voltage limiting function is proportional to the surge voltage or current applied across the device. As such, they do not create a fault in the circuit which permits a flow of system-supplied current following a transient surge.

6-7.1.2. Arc-Discharge Devices. The arc-discharge device (spark gap) is used primarily in applications where over-voltages can be tolerated for a short time, and where the expected transient can contain energy beyond the capabilities of the solid-state diode or varistor. In the fired state, spark gaps are low-voltage clamping devices whose clamping voltage is essentially independent of current magnitude over an extremely wide range of surge currents.

6-7.1.3. Semiconductors. There are several types of semiconductors used for transient protection purposes, including zener diode and members of the thyristor family. Lightning protector semiconductors characteristically provide more rapid response to transients having fast rising voltages than do other protection devices. However, as a class, their ability to absorb high energy surges is less than other protection devices.

6-7.2. REQUIREMENTS. Surge suppression shall be provided as part of all power, communication, data, and process control conductors that enter or exit a facility. The surge suppression can be in the form of spark gaps, metal oxide varistors, transzorbs, fiber optic data lines, isolation transformers or similar. Power and metallic communication lines (including intrusion detection lines) shall enter the facility in shielded cables or metallic conduit run underground for at least 50 feet from the structure. The shielded cable or conduit must also be bonded to primary and secondary ground girdles where they cross. Surge Protection Devices (SPD) shall be installed at the service entrance(s) as near to the penetration point as is practical and meet the technical specifications of NFPA 780. The use of low-pass filters shall be considered for added protection on critical electronic loads as determined by the user. Lightning surge arresters shall be inspected in accordance with manufacturer's recommendations, or after a lightning strike to the lightning protection system to ensure they have not been degraded to the point that they are no longer effective. The frequency of inspection shall be defined by the commanding officer but shall be at least every 24 months to coincide with electrical testing of lightning protection systems. See paragraph 6-9.3.

6-8. SPECIFIC LIGHTNING PROTECTION REQUIREMENTS.

Lightning protection for ordnance facilities shall comply with the following provisions.

6-8.1. EXPLOSIVES OPERATING BUILDINGS. Explosives operating buildings shall be provided with lightning protection using one of the type systems discussed in paragraph 6-4. The testing and maintenance of systems shall be as described in paragraph 6-9.

6-8.2. STORAGE FACILITIES. Storage facilities are grouped into three classes, based on the facilities' needs for lightning protection systems. The following classifications are limited in application to lightning protection requirements and are not to be confused with the military classification of explosives.

6-8.2.1. Class I. Class I ordnance storage facilities include earth-covered, reinforced concrete magazines with reinforcing rods connected to the secondary ground girdle, and earth-covered steel-arch magazines with the steel bonded to a secondary ground girdle. Also, when required, power and ordnance grounds shall be connected to the secondary ground girdle. All metallic components including metal ventilators and signs shall be bonded to the secondary girdle. A primary grounding system is not required. It is not necessary to interconnect, or ground the contents of the magazine unless flammable gases, flammable liquids, exposed explosives, exposed EEDs, damaged ordnance items that could have these faults, damaged ordnance items with exposed propellant, or damaged items leaking hazardous materials are present.

6-8.2.2. Class II. Class II storage facilities include all other earth-covered magazines, permanent aboveground storage magazines, and temporary aboveground storage magazines. Grounding requirements are the same as those for operating buildings as discussed in paragraph 6-5. Commercially built, pre-engineered "portable" magazines constructed of 3/16-inch steel or greater thickness are an exception to this requirement. Lightning protection requirements for portable magazines are listed below for single and group configurations.

6-8.2.2.1. Single Portable Magazines. Single portable magazines less than 25 square feet (using outside dimensions) need only a single ground rod. Single portable magazines greater than or equal to 25 square feet shall be grounded by using a minimum of two separate ground rods, each placed in a different corner. Connections to existing ground girdles may be substituted for ground rods. All earth connections must provide 25 ohms or less resistance-to-earth.

6-8.2.2.2. Portable Magazine Groups. A portable magazine group is formed when two or more portable magazines are bonded together above ground. Portable magazine groups shall meet the following bonding and grounding requirements.

a. Each group must have a minimum of two connections to earth. Groups exceeding 250 feet in perimeter shall have a connection to earth for every 100 feet of perimeter or fraction thereof such that the average distance between all connections to earth does not exceed 100 feet.

b. For small groups requiring only two connections to earth, the connections must be placed at opposite ends of the group, as far apart as is practical.

c. Connections to existing ground girdles may be substituted for ground rods. All earth connections must provide 25 ohms or less resistance-to-earth.

6-8.2.3. Class III. Class III storage is reserved for all forms of open storage whether permanent or temporary. These structures and areas shall have lightning protection. A secondary ground system shall also be provided. The type of lightning protection required for certain Class III storage is as follows:

6-8.2.3.1. Piers and Wharves. Lightning protection systems are required on piers and wharves when ordnance cannot be moved to a protected area at the approach of an electrical storm. The purpose of the lightning protection system on the piers or wharves is to protect the ordnance positioned on these structures from being ignited by direct lightning strikes. A ship alongside is capable of providing a zone of protection for a section of a wharf or pier. The portion of the pier or wharf used for ordnance staging will require lightning protection from a mast or catenary system. The secondary system can consist of a cable or interconnected cables running along the pier or wharf to provide convenient grounding for metal objects. A low resistance path to ground can often be provided by allowing a segment of the cable to extend into the water and be connected to a metal plate that is submerged in the water. All pier or wharf primary and secondary grounding systems must be interconnected where provided. A secondary ground system shall be provided for all cranes. As a minimum, the boom and cable lifting the ordnance shall be bonded to the secondary system, with exception of metal lifting hooks on cranes equipped with hook insulating links. Cranes on piers and wharves shall be moved into the lightning zone of protection when electrical storms approach. Any metal masses on the pier or wharf (bollards, poles, etc.) near ordnance areas and/or within the zone of protection of a lightning protection system shall be assessed for sideflash hazard and bonded to the secondary in accordance with paragraph 6-6.3 if required. Metal masses smaller than the requirements of paragraph 6-6.3 or that are outside the sideflash hazard do not need to be bonded.

NOTE

A secondary grounding system is not required in those cases where there are no permanently installed metal objects to interconnect on the pier.

6-8.2.3.2. Open Storage Pads. Pads shall be provided with lightning protection as specified in paragraph 6-4.1.2 or 6-4.1.3. A secondary grounding system shall be provided if ordnance or flammable materials are within sideflash clearance of cables or masts, or if flammable gases or exposed flammable liquids are present on the pad.

6-8.2.3.3. Airfields. Lightning protection systems may be omitted at flightline PESs (that is, Combat Aircraft Loading Area (CALA), cargo area, helipad) if the system interferes with flightline criteria in Unified Facilities Criteria (UFC) 3-260-01. A commander's risk acceptance, by separate correspondence, is not required.

6-9. TEST AND INSPECTION OF LIGHTNING PROTECTION SYSTEMS.

Proper maintenance is critical for efficient operation of lightning protection systems. Repairs of all discrepancies found during inspections shall be made immediately. Any indication of damage produced by a lightning strike to a structure or its lightning protection system shall be immediately reported to NOSSA. Photographic records of damage suspected to have resulted from a lightning strike shall be obtained prior to repair. For all electrical testing and visual inspection listed in the following paragraphs, accomplishment is permitted within a +/- one month window around the scheduled due date. This is to allow for test/inspection scheduling around production activities, facility access restrictions/maintenance work, and weather conditions that may affect the accuracy of measurements.

6-9.1. TEST PLANS. A grounding system test plan for visual inspection and electrical testing of the lightning protection system must be developed in accordance with the requirements of paragraph 5-8.1.

6-9.1.1. Frequency of Lightning Protection System Resistance Test. The resistance to earth of the lightning protection grounding system shall be measured every 24 months.

6-9.1.2. Testing of Integral Lightning Protection Systems. Upon completion of the installation of an integral lightning protection system, a comprehensive test shall be performed of the entire system. Each air terminal shall be tested, using the point-to-point bonding test described in paragraph 5-8.2.6, to measure the air terminal and conductor resistance to ground. The test value shall measure 1 ohm or less. Thereafter, a 100% visual inspection is required every six months, and every 24 months an electrical test of at least 20% of the air terminals shall be performed. The air terminals selected to be tested shall be representative of the system. The visual inspection criteria of paragraph 6-9.3 apply to integral systems. Visual inspections must look at the entire integral lightning protection system to ascertain there is no damage, such as broken or missing air terminals and ground wires, bent air terminals, galvanic couple action because of dissimilar materials, or sufficient corrosion at grounding system connection points to affect a ground path, etc., which would impact the ability of the integral lightning protection system to function as designed. If there are any questions about the integrity of the system, then a resistance test shall be conducted. If new or replacement ground wires or air terminals are installed or added, then the testing discussed above shall be performed.

6-9.2. ELECTRICAL TESTING. The lightning protection grounding system electrical testing shall be conducted in accordance with paragraph 5-8.2. Bonding resistance testing is the most important

quality control technique that can be used to quantify the effectiveness of a lightning protection system. The bonding resistance test method is a simple point-to-point resistance measurement. The maximum bonding resistance shall be one ohm or less and testing shall be conducted every two years.

6-9.3. VISUAL INSPECTION. Visual inspections of lightning protection systems shall be conducted in accordance with the requirements of paragraph 5-8.3. These systems shall be visually inspected every six months for evidence of corrosion, to ensure that no physical damage has been done to the system. Transient suppression hardware shall also be checked during the inspection. Inspections shall be conducted by a team of personnel trained in the inspection of DoW lightning protection system.

6-10. OPERATIONS DURING ELECTRICAL STORMS.

Each activity shall establish specific documented criteria for determining whether to continue or terminate ammunition and explosives operations at the approach of a thunderstorm. These criteria shall be based on the sensitivity of the operations involved and the amount of time required to safely terminate the operation. Facilities that do not have an approved lightning protection system and that use the electric field indication as their only storm warning system shall immediately terminate ordnance operations when the electric field exceeds 2,000 volts per meter and remains at that level or continues to increase in magnitude. Ordnance operations will also be terminated for intermittent excursions over 2,000 volts per meter when the frequency of occurrences is increasing; see paragraph 6-2. In cases where the facility has in place other storm warning systems, the indications from these systems together with the electric field indication will be used to determine when to terminate ordnance operations. Except as noted in paragraph 6-10.2.1 below, a storm shall not approach closer than ten miles before an ordnance operation is terminated. Specific guidance regarding explosives operations at the approach of a storm are as follows.

6-10.1. MAGAZINES AND OPEN STORAGE AREAS. At the approach of and during an electrical storm, closed magazines containing ammunition and explosives shall not be opened. If work is being performed in the magazine or open storage site, the work shall stop and equipment shall be safely secured. The magazine shall be closed and locked, and personnel shall be evacuated to a safe distance as soon as possible.

6-10.2. EXPLOSIVES OPERATING BUILDINGS. Requirements for explosives operating buildings depend on whether they have lightning protection, whether the lightning protection system meets current requirements, the type of operation involved, and the location of other operating buildings.

6-10.2.1. Lightning Protection Systems Meeting Current Requirements. It is not necessary to terminate operations or to evacuate personnel from explosives operating buildings or other hazardous locations that have lightning protection and secondary grounding system meeting current requirements, unless explosive dust, flammable vapors, or exposed EEDs are present, or unless there are explosives operating buildings not equipped with lightning protection that are located at less than Public Traffic Route (PTR) distance from the building. These buildings and operations shall be specifically identified in the destructive weather plan.

6-10.2.2. Lightning Protection Systems Not Meeting Current Requirements. Risk assessment must be conducted and documented for those facilities protected by a lightning protection system that does not meet the latest lightning protection standards. The need for termination of explosives operations and evacuation of personnel shall be based on the relative threat presented by the deficiency. The lightning risk assessment guide contained in NFPA 780 may be used to help determine the risk. Some adjustments to this guide may be necessary depending on the types of operations involved.

6-10.2.3. Buildings Without Lightning Protection. At the approach of, and during, an electrical storm, all explosives operations shall be shut down, main power switches disconnected unless surge suppression is provided, and personnel evacuated to a designated safe location meeting the requirements of paragraph 6-3.g. When buildings containing explosives are evacuated during electrical storms, operations requiring attention at all times shall be manned by the minimum number of personnel consistent with safety requirements, and only for the time required to shut down the process. Every effort shall be made to anticipate shutdown, and, unless it is absolutely necessary, an explosive process requiring physical presence of personnel shall not be started if a storm is pending. Except where shutdown of a process would create a greater risk to the facility and personnel than the thunderstorm, all work involving exposed explosives, detonators, EEDs, flammable liquids and gases, and chemical ammunition shall be suspended. Suspension is mandatory. Work on hazardous materials other than those listed may continue during a storm under conditions of unusual emergency and by direction of the commanding officer of the facility.

6-10.3. RAILCARS AND MOTOR VEHICLES. At the approach of an electrical storm, railcars or motor vehicles containing ammunition or explosives shall, if possible, be placed in an area equipped with lightning protection. If not possible, the railcars and motor vehicles shall be moved to areas where detonation of their contents will not cause loss of life, and damage to adjacent areas will be minimized. Loading or unloading is prohibited during electrical storms.

6-10.4. PIERS AND WHARVES. Pier and wharf operations shall cease during an electrical storm. Cranes shall be moved into the lightning protection system zone of protection, where available. Personnel exposure shall be minimized when ordnance items are left on or around the pier or wharf.

6-10.4.1. Covered Explosives Handling Wharves. Operations at covered explosives handling wharves shall be terminated and personnel evacuated at the approach of a storm, unless the wharf is protected with both an approved lightning protection system and a primary and secondary grounding system meeting current requirements, and:

a. There are no explosive dusts, flammable vapors, or exposed EEDs present;

b. There are no PESs not equipped with lightning protection that are located at less than Public Traffic Route (PTR) distance from the wharf, based on the NEW at the other PES;

c. A risk assessment has been conducted and documented for the wharf based on the risk to the ordnance, facility, personnel, ship, and ordnance operation being conducted, and the residual risk accepted by the applicable Echelon-2 command.

Covered explosives handling wharves that are permitted to continue explosives operations shall be specifically identified in the destructive weather plan.

6-10.5. DISPOSAL AND EXPLOSIVES TEST OPERATIONS. The destruction of ammunition, explosives, and other hazardous materials, as well as explosives tests and operations associated with the destruction of these materials, shall not be undertaken at the approach of, or during, an electrical storm.

6-10.6. AIRCRAFT. When electrical storms are within ten miles of an ordnance operation, ordnance shall be made as safe as practical, and all ordnance operations shall cease. Aircraft already loaded with ordnance that does not require arming may taxi and launch at the discretion of the installation commanding officer, or as modified by other applicable instructions. Aircraft landing with ordnance

requiring dearming during an electrical storm shall remain in the dearming area until the lightning threat passes.

6-10.6.1. When electrical storms are within 10 miles, installation commanding officers may allow arming/dearming operations to continue on aircraft already loaded/landing with ordnance provided the arming/dearming area is serviced by a pre-strike warning system as specified in paragraph 6-2.1.

6-10.6.2. Pre-strike warning systems servicing arming/dearming areas must be approved in writing by NOSSA.

6-10.6.3. The destructive weather plan shall detail the specific criteria for which aircraft may be armed/disarmed based on the above criteria, and include a communication plan for arming/ dearming from the commands designated authority to personnel associated with the dearming operation.

6-10.6.4. MIL-HDBK-274(AS) (series) contains specific details for the grounding and bonding of aircraft.

CHAPTER 7
QUANTITY-DISTANCE REQUIREMENTS AND STANDARDS

7-1. INTRODUCTION.

This chapter describes the explosives safety quantity-distance (ESQD) requirements applicable to ammunition and explosives and other hazardous material (HAZMAT) at Department of the Navy (DON) shore activities. These requirements apply to all explosives development, manufacturing, test, maintenance, storage, loading and offloading of vehicles, railcars, ships and aircraft, disposal, and handling operations where an energetic response (that is, detonation; burn) is not expected. The requirements are based on records of actual fires and explosions involving ammunition and explosives, the American Table of Distances, and the laws of the State of New Jersey. Standards of the Department of War Explosives Safety Office (DWESO) that takes these factors into consideration are periodically reviewed and updated. The requirements are designed to provide the inhabitants of nearby communities, the personnel of DON shore activities, and adjacent public and private property reasonable safety from serious injury or destruction from accidental fires or explosions, and to minimize the loss of valuable ammunition stores (including inert ordnance items), through accidental fires or explosions. Separation distances for intentional detonations and burn sites are provided in paragraphs 13-1.8 and 13-2.2, respectively.

7-1.1. DWESO STANDARDS AND THE UNO HAZARD CLASSIFICATION. The DWESO standards and criteria, contained in Defense Explosives Safety Regulation (DESR) 6055.09 using the United Nations Organization (UNO) hazard classification system, have been incorporated in this publication in compliance with DoW directives. The DoW uses the UNO classification system for dangerous materials to identify the hazardous characteristics of ammunition and explosives. The UNO classification system contains nine hazard classes as indicated in table 3-9 and defined in paragraph 3-8. Two of these, Class 1 and Class 6, apply to hazardous materials considered in this volume. Class 1 consists of ammunition and explosives and blasting agents. Class 6 consists of poisonous substances, irritating materials and etiological agents.

7-1.1.1. Class/Divisions. Hazard classes are further divided into divisions that indicate the primary characteristic and associated hazards. These divisions are indicated in table 3-9. Hazard Classes and Divisions (HC/D) are designated using decimal notation. A Class 1, Division 1 hazard, for example, is designated by 1.1. As a further refinement, a numerical figure in parenthesis is shown to the left of the HC/D designator to indicate the minimum separation distance, in hundreds of feet, needed for protection from debris, fragments, and firebrands when distance alone is relied on for protection; i.e., (18)1.1, (08)1.2, or (06)1.3.

7-1.1.2. Class 6, Division. Articles containing riot control substances without explosives components are classified in the UNO system as HC/D 6.1. Bulk agents are designated HC/D 6.1 as in the UNO system as well.

7-1.2. DEVIATIONS FROM REQUIREMENTS. Department of the Navy shore activities that are unable to comply with any requirement of this chapter shall obtain specific waivers or exemptions from Chief of Naval Operations (CNO) for Navy activities or MARCORSYSCOM for Marine Corps activities

via their operational chain of command. Deviating activities shall attempt to obtain maximum protection against fire or explosion within the intent of the requirements of this chapter. (See paragraph 1-6)

7-1.3. AMMUNITION AND EXPLOSIVES, AND HAZARDOUS MATERIALS IN TRANSIT. The ESQD storage requirements in this chapter do not apply to material while in transit. The regulations of the Department of Transportation (DOT) and NAVSEASYSCOM for in-transit ammunition and explosives and HAZMAT shipments are provided in NAVSEA SW020-AG-SAF-010 and SW020-AC-SAF-010.

7-2. BASIC Q-D PRINCIPLES.

Separation distance requirements for ammunition and explosives are based on the degree of protection needed and the type and amount of material involved, segregation of material, and HC/D 1.1 explosion effects and permissible exposures. These considerations are discussed in the following paragraphs. When making ESQD determinations involving HC/D 1.1 material, distance is calculated using the formula $D=KW^{1/3}$, where D is the separation distance in feet, K is a factor that varies depending on the risk assumed or permitted, and W is the net weight of the explosives in pounds. When the weight is expressed in kilograms, $D=KQ^{1/3}$ where D is distance in meters and Q is the explosive weight in kilograms. The value of K in English units is (feet), approximately 2.5 times its value in metric units (meters). The respective units of K are $ft/lb^{1/3}$ and $m/kg^{1/3}$. Distance requirements determined by the formula with English units are sometimes expressed by the value of K, using terminology K9, K11, K18 to mean K=9, K=11, K=18. The value of K, as applied in various situations, is given in the tabular data at the end of this chapter. As the value of K decreases, the separation distance decreases, indicating acceptance of a greater amount of damage.

a. When distance and K factor are known: $W = \left(\frac{D}{K}\right)^3$

b. When distance and weight are known: $K = \frac{D}{W^{1/3}}$

c. When performing QD calculations using formulas, resulting answers with a decimal value of 0.5 or more may be rounded up to the nearest whole number, and resulting answers with a decimal value of less than 0.5 may be rounded down to the nearest whole number. For example, if calculating the required distance:

$D = K(W)^{1/3}$ = 40(1500 lbs)$^{1/3}$ = 457.89 feet (ft) = 458 ft

$D = K(W)^{1/3}$ = 18(200 lbs)$^{1/3}$ = 105.26 ft = 105 ft

Or, if calculating the allowable net explosive weight quantity-distance (NEWQD):

$W = \left({}^{D}/_{K}\right)^3$ = (1150 ft/40)^3 = 23,763.67 lbs = 23,764 lbs

$W = \left({}^{D}/_{K}\right)^3$ = (700 ft/18)^3 = 58,813.44 lbs = 58,813 lbs

7-2.1. AMOUNT OF MATERIAL. The exposed site (ES), or the potential hazard area surrounding accumulations of ammunition and explosives, increases in size as the quantity of ammunition and explosives at any one location increases. For this reason, it is desirable to keep the quantity of ammunition and explosives present in one location to the minimum amount that is consistent with operating requirements. Maximum limits have been established for the quantity of ammunition and explosives permitted in any one pile, building or magazine considering its distance from adjacent piles

or magazines and from nearby facilities, inhabited areas and traffic routes. The amount of ammunition and explosives at each location should be kept under these specified limits to reduce the effects in the event of an accident.

7-2.1.1. Type of Material. The dangers or hazards involved in storing ammunition and explosives are measured not only by their quantity, but also by the kind of explosives or the type of ammunition. Ammunition and explosives used by the DON have been classified into certain broad divisions or groups for determining storage requirements. Materials within each division generally present the same type of hazard and are stored in the same way.

7-2.1.2. Separation Distance. The distance separating the potential explosion site (PES) from the ES, determines the permissible amount of ammunition and explosives at any location.

7-2.1.3. Segregation of Material. Some explosives are potentially more hazardous when stored with other ammunition and explosives. Therefore, the segregation of certain types of ammunition and explosives is imperative. Storage restrictions of different storage compatibility groups (SCG) are discussed in chapter 3.

7-2.2. EFFECTS OF EXPLOSIONS. When assessing the hazards associated with an explosion, the principal effects of the explosives output to be considered are blast pressure, primary and secondary fragments, thermal effects, and chemical hazards. Facility damage and personnel injury from the explosion of mass detonating explosive materials, HC/D 1.1, result primarily from blast overpressure and impulse. For ESQD determinations, peak incident overpressure generally is the parameter used to define maximum permissible levels of exposure. However, in certain instances, blast impulse is the parameter used because of the physical characteristics of nearby exposed structures.

7-2.2.1. Blast Wave Phenomena. The violent release of energy from a detonation in a medium such as air or water creates a sudden increase in pressure within that medium. The resulting pressure disturbance, or blast wave, is characterized by an almost instantaneous rise from the ambient pressure to a peak incident pressure. This pressure increase, or shock front, travels outward from the detonation point with a diminishing velocity, but one that always exceeds the sonic velocity of the medium. As the shock front expands into increasingly larger volumes of the medium, the peak incident pressure at the shock front decreases and the duration of the pressure increases.

7-2.2.2. Partially Confined Explosions. When an explosion occurs within a structure, the peak pressure associated with the initial shock front will be amplified by reflections within the structure. In addition, the accumulation of gases from the explosion will create additional pressures that increase the duration of pressures within the structure. The combined effects of both pressures eventually may destroy the structure if it is not sufficiently strengthened, or if adequate venting for the gas and the shock pressure is not provided. For structures that have one or more strengthened walls, venting to relieve excessive gas or shock pressures may be provided by openings in the remaining walls or roof or by frangible construction of these walls or roof. This type of construction permits the blast wave from an internal explosion to spill over onto the exterior ground surfaces. The resulting exterior or leakage pressures expand radically and act on structures and persons on the other side of the barrier.

7-2.2.3. Obstructions. If the blast wave is obstructed by a rigid surface that is at an angle to the propagation of the wave, a reflected pressure greater than the blast pressure instantly develops. The reflected pressure is a function of the pressure of the blast wave and the angle of the rigid surface to the shock front.

7-2.3. DEGREE OF PROTECTION. Minimum separation distance for varying quantities of mass detonating explosives based on the degree of protection needed are specified in tables at the end of this chapter. The general categories used to determine minimum distance requirements are further described in paragraph 7-8.

7-2.4. STRUCTURAL CONSIDERATIONS. The degree of safety obtained using minimum specified separation distances will depend on the construction of affected structures.

7-2.4.1. Conventional Structures. Conventional structures are typically designed to withstand roof snow loads of 30 pounds per square foot (psf) and wind loads of 100 miles per hour (mph) [161 kilometers per hour (km/h)]. These loads equate to blast overpressures of 0.2 pounds per square inch (psi). Blast pressure at the HC/D 1.1 barricaded intraline distance $9W^{1/3}$ feet (3.6Qm) is 12 psi. At the unbarricaded intraline distance $18W^{1/3}$ feet (7.2Qm) it is 3.5 psi (24 kPa). At the inhabited building distance 40W to 50W (16Q to 20Q) blast pressure is 0.9 to 1.2 psi. Comparing these pressures with the design capacity of conventional structures, it is evident that these buildings will be damaged even at the inhabited building distance.

7-2.4.2. Earth-Covered Magazines. Earth-covered, intermagazine distances will provide nearly complete protection against the propagation of explosives between adjacent magazines as the result of blast, fragments, and fire. However, there may be some cracking or crumbling of concrete barrels and front and rear walls, and damage may result to doors and ventilators.

7-2.4.3. High Performance Magazines. The high performance magazine (HPM) identified in paragraph 7-8.1.6 with the minimum intermagazine separation distances required by table 7-12 and table 7-13 provides virtually complete protection against prompt propagation of explosion by blast, fragments, and fire. The two-story transfer area is enclosed by a pre-engineered metal building which may be severely damaged. The amount of damage to be expected at various pressure levels is described below. Unless special design requirements are imposed, access to ammunition items at less than K30 from a donor explosion may require extensive cleanup and a mobile crane.

7-2.4.4. Barricaded Open Storage Modules. Barricaded open storage modules provide a high degree of protection against propagation of explosion by blast overpressure and fragments at the barricaded aboveground magazine distance, $6W^{1/3}$ feet (2.4Qm). However, if flammable materials are present in the cells, propagation of the explosion by fire is possible. At distances of $1.1W^{1/3}$ feet, items will be covered with earth and will not be available for use unless extensive uncovering operations and perhaps necessary maintenance is performed. At distance of $2.5W^{1/3}$ feet, items should be readily accessible.

7-2.5. BLAST EFFECTS ON PERSONNEL. The hazards of air blast overpressure on personnel can be described in terms of the effects shown in table 7-1, that will occur at various blast overpressure levels.

Table 7-1. Blast Effects on Personnel

Effect	Dose (psi)
1% Eardrum Rupture	3.4
50% Eardrum Rupture	16
Threshold Lung Rupture	10 (50 ms duration) 20-30 (3 ms duration)
1% Mortality	27 (50 ms duration) 60-70 (3 ms duration)

7-3. BLAST EFFECTS AT VARYING SEPARATION DISTANCES.

The distance separating a PES from an adjacent PES or from other ESs determines the maximum permissible amount of mass detonating explosives or ammunition allowable at that location. The blast effects at various distances are shown in table 7-2 and discussed in the following paragraphs.

Table 7-2. Blast Effects at Varying Separation Distances

	Permissible Exposure Protection (PSI)	K-Factor	Distance Type
Distance	27	6	Barricaded Above-Ground Magazine Distance
	12	9	Barricaded Intraline Distance
	8	11	Unbarricaded Magazine Distance
	3.5	18	Unbarricaded Intraline Distance
	2.3	24	Public Traffic Route Distance (100,000 lbs NEW and below)
	1.7	30	Public Traffic Route Distance (over 250,000 lbs NEW)
	1.2	40	Inhabited Building Distance (100,000 lbs NEW and below)
	0.9	50	Inhabited Building Distance (250,000 NEW and above)
	---	328	Absolute Safe Distance

7-3.1. BARRICADED ABOVEGROUND MAGAZINE. The required separation distance between barricaded aboveground magazines is determined by $D=6W^{1/3}$ feet, or $2.4Q^{1/3}$ meters. This corresponds to a peak overpressure exposure level of 27 psi or 1.8 bars (1 bar = 14.5 psi) when the source of an explosion is in the open. Neither blast overpressure nor blast impulse will be reduced significantly at this distance by an ordinary storage building of conventional, unstrengthened construction or by the barricade required between aboveground magazines. Barricades are effective in preventing the immediate propagation of the explosion, but provide only limited protection against a delayed propagation of the explosives caused by a fire resulting from high-angle firebrands. Exposed structures containing high-value, mission-critical equipment or personnel may require hardening. The presence of

barricading does not reduce public traffic route (PTR) or inhabited building distance (IBD) distance requirements. Some effects of a blast at this distance are:

a. Conventional, unstrengthened buildings will be destroyed completely.

b. The direct action of the blast will cause personnel to be struck by building debris or impacted against hard surfaces, causing death in both cases.

c. Transport vehicles will be overturned and crushed by the blast.

d. Explosives-loaded vessels will be damaged severely, more than likely resulting in propagation of the explosion.

e. Aircraft will be destroyed by blast, thermal, and debris effects.

7-3.2. BARRICADED INTRALINE DISTANCE. The required separation distance between barricaded operating buildings when at least one contains explosive material is determined by $D=9W^{1/3}$ feet, or $3.6Q^{1/3}$ meters. This corresponds to a peak overpressure exposure level of 12 psi or 0.7 bars when the source of an explosion is in the open. Barricading is required at this distance to control the effects of an explosion. Hardening may be required when exposed structures contain expensive equipment, are critically important to a mission, or personnel exposure is likely. Improperly designed barricades or structures may increase the hazards from flying debris or may increase the risk to personnel and equipment if they collapse. The direct propagation of an explosion between two locations containing explosives is unlikely when barricades are positioned between them to intercept high-velocity, low-angle fragments; however they provide only limited protection against any delayed propagation of explosives caused by a fire resulting from high-angle firebrands. The presence of barricades does not reduce required PTR and IBD distance requirements. Some effects of a blast at this distance are:

a. Unstrengthened buildings will suffer severe structural damage that approaches total destruction.

b. Severe injuries or death to occupants at the ES will be likely from the blast itself, from building collapse, or from fragments or debris.

c. Aircraft will be damaged beyond economical repair both by the blast and by fragments. If the aircraft are loaded with explosives, delayed explosions are likely to result from subsequent fires.

d. Transport vehicles will be damaged heavily and probably totally lost.

7-3.3. UNBARRICADED ABOVEGROUND MAGAZINE DISTANCE. The required separation distance between unbarricaded aboveground magazines is determined by $D=11W^{1/3}$ feet or $4.4Q^{1/3}$ meters. This corresponds to a peak overpressure exposure level of 8 psi or 0.5 bars when the source of an explosion is in the open. Blasts at this distance will be suppressed only negligibly by a conventionally constructed storage building at the site. Barricading, however, will significantly reduce the risk of propagation of the explosion and personnel injury as a result of blast fragments. Some effects of a blast at this distance are:

a. Unstrengthened buildings will suffer damage approaching total destruction.

b. Serious injury to personnel is likely from the blast as well as from fragments and debris resulting from the blast.

c. There is a 20% risk of eardrum rupture and serious lung injuries may occur.

d. Vessels containing explosives are likely to be damaged extensively and delayed propagation of the explosion may occur.

e. Aircraft will be damaged heavily by blast and fragments and are likely to be destroyed by subsequent fire.

f. Transport vehicles will sustain severe body damage, minor engine damage, and total glass breakage.

7-3.4. UNBARRICADED INTRALINE DISTANCE. The required separation distance between unbarricaded operating buildings when at least one contains explosive material is determined by $D=18W^{1/3}$ feet, or $7.2Q^{1/3}$ meters. This corresponds to a peak overpressure exposure level of 3.5 psi or 0.24 bars when the source of an explosion is in the open. In many situations, control of blast pressure by appropriately designed suppressive construction at the explosive site or protective construction at the ES is practical. The use of construction to withstand blast overpressure is encouraged when it is more economical than distance alone or when sufficient distance is not available to prevent the overpressure from exceeding the 3.5 psi exposure level. Some effects of a blast at this distance are:

a. Direct propagation of an explosion is not expected.

b. There is some possibility that delayed communication of an explosion may occur from fire or as a result of equipment failure at the ES.

c. Damage to unstrengthened buildings will be serious, and will approximate 50% or more of the total replacement cost.

d. There is a possibility of eardrum damage to personnel.

e. Serious personnel injuries or death are likely from fragments, debris, firebrands, or other objects.

f. Cargo ships will suffer damage to decks and superstructure from fragments and from doors and bulkheads on the weather deck buckling from overpressure.

g. Aircraft can be expected to suffer considerable structural damage from the blast. Fragments and debris are likely to cause severe damage to aircraft when small quantities of explosives are involved.

h. Transport vehicles will incur extensive, but not severe damage that consists mainly of dishing of body panels and cracking of shatter-resistant window glass.

7-3.5. PUBLIC TRAFFIC ROUTE DISTANCE (UNDER 250,000 POUNDS NEW). The required separation distance from an explosives location to the nearest public traffic route (PTR) or personnel exposed to remotely controlled operations is determined by $D=24W^{1/3}$ feet or $9.6Q^{1/3}$ meters. This corresponds to a peak overpressure exposure level of 2.3 psi or 0.16 bars when the source of an explosion level is in the open. At this distance, the risk of injury or damage due to fragments from limited quantities of explosives at the PES can be reduced by barricading. Also, it may be practical to

control the pressure level by appropriately designed suppressive construction at the PES or by protective construction at the ES. Some effects of a blast at this distance are:

a. Unstrengthened buildings can be expected to sustain damage approximating 20% of their replacement cost.

b. Occupants of exposed structures may suffer temporary hearing loss or other injuries from secondary blast effects such as building debris and from the tertiary effect of displacement.

c. Personnel in the open are unlikely to be killed or seriously injured directly by the blast. There could be some injuries to personnel caused by fragments and debris depending mainly on the structure at the PES and on the amount and fragmentation characteristics of the ammunition involved.

d. Vehicles on the road should suffer little damage unless hit by a fragment or unless the blast wave causes momentary loss of control.

e. Aircraft should suffer some damage to appendages and sheet metal skin from blast and possible fragment penetration. However, the aircraft should be operational after minor repairs.

f. Cargo-type ships should suffer minor damage to deck structures and exposed electronic equipment from the blast and from possible fragment penetration, but this damage should be easily repairable.

NOTE

Public traffic distance between 100,000 pounds NEW and 250,000 pounds NEW is based on an interpolated distance factor of $24W^{1/3}$ to $30W^{1/3}$.

7-3.6. PUBLIC TRAFFIC ROUTE DISTANCE (OVER 250,000 POUNDS NEW). The required separation distance from an explosives location to the nearest PTR or access area is determined by $D=30W^{1/3}$ feet or $12Q^{1/3}$ meters. This corresponds to a peak overpressure exposure level of 1.7 psi or 0.1 bars when the source of an explosion is in the open. For limited quantities of explosives at the PES, the risk of injury or damage due to fragments may be reduced by barricading or by using minimum fragment distance requirements. Some effects of a blast at this distance are:

a. Unstrengthened buildings can be expected to sustain damage approximately 10% of their replacement cost.

b. Occupants of exposed, unstrengthened structures may suffer injury from secondary effects such as building debris.

c. Parked military and commercial aircraft will probably sustain minor damage due to the blast, but should remain airworthy.

d. Aircraft in landing and takeoff status may lose control and crash.

e. Personnel in the open are unlikely to be killed or seriously injured directly by blast. There could be some injuries to personnel caused by fragments and debris depending mainly on the structure at the PES and on the amount and fragmentation characteristics of the ammunition involved.

7-3.7. INHABITED BUILDING DISTANCE. The required separation distance from the PES to the nearest building, other than an operations building, is determined by $D=40W^{1/3}$ to $50W^{1/3}$ feet or $16Q^{1/3}$ to $20Q^{1/3}$ meters. This corresponds to a peak overpressure level of between 1.2 psi and 0.9 psi or 0.08 to 0.06 bars when the source of an explosion is in the open. The risk of broken glass and structural damage can be reduced by orienting structures appropriately, by keeping the surface area of exposed glass panels to a minimum and by using shatterproof glazing. Some effects of a blast at this distance are:

a. Unstrengthened buildings can be expected to sustain damage up to about 5% of their replacement cost.

b. Personnel are provided a high degree of protection from death or serious injury. Injuries that do occur will be caused principally by broken glass and building debris.

c. Personnel in the open are not expected to be seriously injured directly by the blast. Some injuries to personnel could be caused by fragments and debris, depending on the PES structure and the amount and fragmentation characteristics of the ammunition at the PES.

7-4. EXPLOSIVES SAFETY QUANTITY DISTANCE DETERMINATIONS.

Explosives safety quantity-distance requirements are based on the relationship between NEW and the separation distance between the PES and the ES. This relationship for HC/D 1.1 is given by the formula $D=KW^{1/3}$ discussed in paragraph 7-2.

7-4.1. SINGLE-MULTIPLE SITES AND HAZARDS.

a. Site Relationships. The damage or injury potential of an explosion normally is determined by distance between the PES and the ES. However, the degree of hazard also depends on: (1) the ability of the PES to suppress blast overpressure, primary and secondary fragments, and (2) the ability of the ES to resist the effects of the explosion. The ESQD requirements in this chapter are the minimum standards for separating a PES from an ES after considering these suppressive and resistive abilities. The following paragraphs establish ESQD standards for related and unrelated PESs and for explosive and nonexplosive ESs.

b. Adjacent Explosions. Extensive tests and analytical work have proven that the HC/D 1.1 blast waves will coalesce when two or more stacks of equal amounts of mass-detonating explosives detonate at nearly the same time. This occurs if the time interval between blasts in milliseconds is less than 4.0 times the cube root of the NEW in one stack in pounds if the adjacent stack is positioned laterally, or less than 5.6 times the cube root of the NEW in pounds if the adjacent stack is positioned axially. If coalescence occurs, the combined shock wave will equal that of a single detonation of a charge of the same weight as the combined stacks. The actual time interval between successive detonations is a function of the distance separating the stacks, the geometry and distribution of the stacks, the design of the dividing wall or other barrier separating the stacks, and the sensitivity of the explosives.

c. Use of Subdividing Barriers. Suitable barriers or adequate separation distance may be used to subdivide large quantities of mass-detonating HC/D 1.1 explosives. The barriers or the separation distance must prevent the propagation of the explosion in one unit to the explosives in another unit. When propagation is prevented, ESQD determinations are based on the subdivision having the largest net explosives weight (NEW). When propagation cannot be prevented, the NEW of each subdivision

must be added together and this total NEW used for ESQD determinations. Barriers used to create subdivisions must be designed in accordance with the principles in UFC 3-340-02.

d. Controlling Class of Explosives. The quantity of explosives at a PES used in ESQD determinations shall be the NEW of the controlling class of explosives, which is that class of explosives requiring the greatest separation. Criteria for determining the NEW of various mixes of ammunition and explosives is provided in paragraph 7-4.2. For the HPM the NEW for determining separation distances is based on the maximum credible event (MCE). The MCE is the sum of the contents of an individual open cell and the loading dock, rather than the aggregate NEW of the entire magazine.

7-4.1.2. Single Site. The total quantity of explosives at a PES, determined by criteria in paragraph 7-2.1, shall be used for ESQD determinations. When the total quantity of explosives is subdivided by substantial dividing walls to limit the possibility of detonation, the NEW in the subdivision containing the highest quantity of explosives shall be used instead of the total NEW.

7-4.1.3. Multiple Sites Single Hazard. The quantity of explosives permitted at each of two or more PESs when the same ESQD Table applies shall be determined by considering each a PES. The quantity of explosives stored at any one PES shall be limited to the amount allowed by the appropriate Table for the distances that separate the sites concerned.

7-4.1.4. Multiple Sites Multiple Hazards. The quantity of explosives permitted at each of two or more nearby PESs for which different QD tables apply shall be determined by considering each PES individually. Then, using the Table appropriate to each target PES, determine the quantity of explosives permitted in the PES for the distance between the PES and each target PES. Where more than one quantity is determined for any one PES, the smallest quantity shall be the maximum permitted.

7-4.2. CALCULATING NEW FOR CLASSES/DIVISIONS. The total quantity of ammunition and explosives in a facility is calculated as shown below. Where the DWESO has approved a HE equivalence for a propellant and/or pyrotechnic, then this HE equivalence may be used for determining NEW. In such cases, the sum of the HE plus the HE equivalence of the propellant and /or pyrotechnic will be the applicable NEW. This NEW is provided in NAVSEA SW020-AC-SAF-010 for all Navy hazard-classified ammunition and explosives, and is referred to as the storage NEW.

7-4.2.1. Mass-Explosion (HC/D 1.1). The NEW is the total weight of all HE plus the total weight of all propellant in the HC/D 1.1 items.

7-4.2.2. Nonmass-Explosion, Fragment-Producing (HC/D 1.2).

a. HC/D 1.2.1. The NEW is the total weight of all HE plus the total weight of propellant in all HC/D 1.2.1 items. In certain situations, the MCE, as outlined in paragraph 7-8.2.3.1 will be used as the basis for determining applicable Q-D.

b. HC/D 1.2.2. The NEW is the total weight of all HE plus the total weight of propellant in all HC/D 1.2.2 items.

c. HC/D 1.2.3 (Unit Risk HC/D 1.2). The NEW is the total weight of all HE plus the total weight of propellant in all HC/D 1.2.3 items. This material is treated as HC/D 1.3; however, a minimum inhabited building distance (IBD) will apply as outlined in paragraph 7-8.2.7.

7-4.2.3. Mass Fire, Minor Blast, or Fragment (HC/D 1.3). The NEW is the total weight of all HE, propellant, and pyrotechnics in all HC/D 1.3 items.

7-4.2.4. Moderate Fire, No Blast, or Fragment (HC/D 1.4). The NEW is the total weight of all HE, propellant, and pyrotechnics in all HC/D 1.4 items.

7-4.2.5. Explosive Substance, Very Insensitive (with Mass Explosion Hazard) (HC/D 1.5). The NEW is the total weight of all HE plus the total weight of propellant in all HC/D 1.5 items.

7-4.2.6. Explosive Article, Extremely Insensitive (HC/D 1.6). The NEW is the total weight of Extremely Insensitive Substance (EIS) in all HC/D 1.6 items. However, the weight of EIS in a single HC/D 1.6 will also be considered, as specified in table 7-23, for determining Q-D.

7-4.2.7. Exclusions. Munitions fillers that do not contribute to explosive effects [for example, colored and HC smoke, dyes, irritants, white phosphorus (WP), plasticized white phosphorus (PWP), and pyrophoric agent TPA] are excluded when determining NEW.

7-4.2.8. Buffer Configurations. If DWESO-approved buffer configurations are provided, the NEW is the explosives weight of the largest stack plus, if applicable, the explosives weight of the buffer material, excluding the NEW of HC/D 1.4.

7-4.2.9. Calculating the Explosives Weight for Mixed HC/Ds. The presence of HC/D 1.4 does not affect the NEW of mixed HC/D. When HC/D 1.1 is mixed with any other HC/D, treat the mixture as HC/D 1.1, except as noted in paragraph 7-4.2.9.1. HC/D 1.5 is always treated as HC/D 1.1.

7-4.2.9.1. HC/D 1.1 with HC/D 1.2 (HC/D 1.2.1, HC/D 1.2.2, and HC/D 1.2.3). Use whichever of the following generates the largest Q-D:

a. Sum the NEW for HC/D 1.1 and NEW for HC/D 1.2 and treat the mixture as HC/D 1.1, or

b. The NEW of the mixture is the NEW of the HC/D 1.2 subdivision requiring the largest Q-D.

7-4.2.9.2. HC/D 1.1 with HC/D 1.3. Sum the NEW for HC/D 1.1 and the NEW for HC/D 1.3 and treat the mixture as HC/D 1.1.

7-4.2.9.3. HC/D 1.1 with HC/D 1.6. Sum the NEW for HC/D 1.1 and the NEW for HC/D 1.6 and treat the mixture as HC/D 1.1.

7-4.2.9.4. HC/D 1.2.1 with HC/D 1.2.2. The NEW for the mixture is the NEW of the sub-division requiring the largest Q-D.

7-4.2.9.5. HC/D 1.2.1 with HC/D 1.2.3. The NEW for the mixture is the NEW of the sub-division requiring the largest Q-D.

7-4.2.9.6. HC/D 1.2.2 with HC/D 1.2.3. The NEW for the mixture is the NEW of the sub-division requiring the largest Q-D.

7-4.2.9.7. HC/D 1.2.1 with HC/D 1.2.2 with HC/D 1.2.3. The NEW for the mixture is the NEW of the sub-division requiring the largest Q-D.

7-4.2.9.8. HC/D 1.2 (HC/D 1.2.1, HC/D 1.2.2, and HC/D 1.2.3) with HC/D 1.3. The NEW for the mixture is the NEW of the HC/D requiring the largest Q-D.

7-4.2.9.9. HC/D 1.2 (HC/D 1.2.1, HC/D 1.2.2, and HC/D 1.2.3) with HC/D 1.6. Treat the HC/D 1.6 as HC/D 1.2.3 and determine NEW in accordance with paragraph 7-4.2.9.5 through 7-4.2.9.7 above, as applicable.

7-4.2.9.10. HC/D 1.3 with HC/D 1.6. Sum the NEW for the HC/D 1.6 and the NEW for HC/D 1.3 and treat the mixture as HC/D 1.3.

7-4.3. NEW ENERGETIC MATERIALS. The storage NEW of energetic materials being developed at Research, Development, Test & Evaluation (RDT&E) facilities is often not known. Therefore, the actual weight of energetic materials may be used in determining NEW for any device containing energetic material or PES at RDT&E facilities.

Table 7-3. Energetic Liquid Explosive Equivalents[1, 2, 3, 4, 5]

ENERGETIC LIQUIDS	TNT EQUIVALENCE	
	STATIC TEST STANDS	RANGE LAUNCH
LO_2/LH_2	See Note 6	See Note 6
LO_2/LH_2 + LO_2/RP-1	Sum of (see Note 6 for LO_2/LH_2) + (10% for LO_2/RP-1)	Sum of (see Note 6 for LO_2/LH_2) + (20% for LO_2/RP-1)
LO_2/RP-1	10%	20% up to 500,000 lbs + 10% over 500,000 lbs
IRFNA/UDMH[7]	10%	10%
N_2O_4/UDMH + N_2H_4[7]	5%	10%
N_2O_4 liquid oxidizer + PBAN solid fuel (Hybrid propellants)	15%[8]	15%[8]
NITROMETHANE (alone or in combination)	100%	100%
Otto Fuel II	100%[9]	--
Ethylene Oxide	100%[10]	100%[10]

NOTES:

1. The percentage factors given in the Table are to be used to determine equivalencies of energetic liquids mixtures at static test stands and range launch pads when such energetic liquids are located aboveground and are unconfined except for their tankage. Other configurations shall be considered on an individual basis to determine equivalencies.

2. The explosive equivalent weight calculated by the use of this table shall be added to any non-nuclear explosive weight aboard before distances can be determined from tables 7-9 and 7-10.

3. These equivalencies also apply for the following substitutions:

a. Alcohols or other hydrocarbons for RP-1.

b. H_2O_2 for LO_2 (only when LO_2 is in combination with RP-1 or equivalent hydrocarbon fuel).

c. MMH for N_2H_4, UDMH, or combination of the two.

4. For quantities of energetic liquids up to but not over the equivalent of 100 lb of explosives, the distance shall be determined on an individual basis by Naval Ordnance Safety and Security Activity (NOSSA). All personnel and facilities, whether involved in the operation or not, shall be protected by operating procedures, equipment design, shielding, barricading, or other suitable means.

5. Distances less than intraline are not specified. Where a number of prepackaged energetic liquid units are stored together, separation distance to other storage facilities shall be determined on an individual basis by NOSSA, taking into consideration normal hazard classification procedures.

6. For siting launch vehicles and static test stands, explosive equivalent weight is the larger of:

(1) The weight equal to $8W^{2/3}$ where W is the weight of LO_2/LH_2, or

(2) 14% of the LO_2/LH_2 weight. For these calculations, use the total weight of LO_2/LH_2 present in the launch vehicle, or the total weight in test stand run tankage and piping for which there is no positive means to prevent mixing in credible mishaps. When it can be reliably demonstrated that the maximum credible event involves a lesser quantity of energetic liquids subject to involvement in a single reaction, the lesser quantity may be used in determining the explosive equivalent yield. When siting is based on a quantity less than the total energetic liquids

present, the maximum credible event and associated explosive yield analysis must be documented in an approved site plan.

7. These are hypergolic combinations.

8. Explosive equivalency of the hybrid rocket system N2O4 liquid oxidizer combined with PBAN solid fuel was evaluated in 200-pound tests (see “Investigation of the Explosive Potential of the Hybrid Propellant Combinations N204/PBAN and CTF/PBAN” by C. Wilton). These tests indicate a maximum TNT equivalency of 15% for an explosive donor accident scenario, 5% for a high velocity impact scenario, and less than 0.01% (negligible) for static mixing (tower drop) failures.

9. See note 10 of table 7-5.

10. See note 8 of table 7-5.

7-4.4. EXPLOSIVE LIMITS AND POSTING REQUIREMENTS. The following explosive limits and posting requirements apply to all PES. The posted limits must never exceed the site approved limit, but can be administratively reduced by the activity and documented in a memo to file. Administrative reductions do not change established ESQD arcs.

Table 7-4. Factors to Use When Converting Gallons of Energetic Liquids into Pounds[1]

Item	Pounds per Gallon	At Temperature °F
Chlorine pentafluoride	14.8	77
Chlorine trifluoride	15.1	77
Ethyl alcohol	6.6	68
Ethylene oxide	7.4	51
Fluorine (liquid)	12.6	-306
HAN Monopropellants	11.9	77
HAN solution (25 to 95 wt%)	10.0 to 13.4	68
Hydrazine	8.4	68
Hydrogen peroxide (90%)	11.6	77
JP-10	7.8	60
Liquid hydrogen	0.59	-423
Liquid oxygen	9.5	-297
Monomethyl hydrazine	7.3	68
Nitrogen tetroxide	12.1	68
Nitrogen trifluoride	12.8	-200
Nitromethane	9.5	68
Otto fuel II	10.3	77
Propylene oxide	7.2	32
Red fuming nitric acid (IRFNA)	12.9	77
RP-1	6.8	68
UDMH	6.6	68
UDMH/hydrazine	7.5	77

NOTES:

1. Conversion of quantities of energetic liquids from gallons to pounds: Pounds of energetic liquids=gallons X density of energetic liquids in pounds per gallon.

7-4.4.1. Operating Buildings.

7-4.4.1.1. Explosive Limits. The maximum explosive limit for an operating building is determined by operational directives that are subject to the applicable ESQD requirements contained in this chapter. Explosive limits are established and approved by the site approval process. NOSSA can approve a change to the original explosive limit when the explosive hazard has not increased or when requirements of an explosive location changes but site approval in accordance with paragraph 8-1.2 is not required. In either case all ESQD requirements must be met. Explosive limits shall not be exceeded except when authorized by a waiver. Explosive limits inside operating buildings including

rooms, cubicles, and other confined areas as well as to railcars or trucks adjacent to the operating building will be established by site approval. Adjustments to confined areas that do not increase personnel exposure nor exceed facility limits may be authorized by the activity commanding officer. Determining explosive limits requires a careful analysis of all facts including operation timing, transportation methods, size of the items, and the chemical and physical characteristics of the material. More strict limits are required for more sensitive or hazardous materials. Limits can be established for each operation rather than an overall basis. Limits need not be expressed in units of weight or in number of items. They can be given in terms of trays, boxes, racks, or other units that may be more easily observed and controlled. When smaller quantities of explosives are sufficient for the operations, explosive limits shall be established at the minimum quantity required for efficient performance of the operation and identified in the SOP. The supervisor or other specifically designated person shall be responsible for enforcing the posted explosive limits. Operations shall be stopped in any operating building or room when, for any reason, the posted explosives limit is exceeded. Operations shall not resume until the excess explosives have been removed.

7-4.4.1.2. Posting Requirements. Placards specifying the permissible quantity of explosives allowed in an operating building or adjacent area as established in the site approval shall be conspicuously posted in the location as well as a hazard classification symbol representing the most hazardous material present in accordance with paragraph 4-4.2.9. The placards shall be kept current and shall have lettering large enough so persons with average vision are able to read them as they enter the building. The following requirements for size of lettering shall be met: (1) letters at least 1-inch high for signs in service magazines, press cells, drill rooms, fuzing and defuzing cells, pyrotechnic mixing and pressing cells, and rooms of equivalent size or for equivalent functions; and (2) letters at least 3 inches high for signs in operating building areas including, but not limited to, inert preparation rooms, assembly rooms, melt, pour and cooling areas, finishing rooms, paint spray rooms, and similar rooms or confined areas of equivalent size and used for equivalent functions.

7-4.4.2. Magazines and Ready Service Lockers.

7-4.4.2.1. Explosive Limits. The explosive limit for magazines, ready service lockers and magazine areas is governed by a Q-D relationship based on the type of magazine and the type of hazard involved.

7-4.4.2.2. Posting Requirements. A placard specifying the explosive limits shall be posted or painted on either the inside front wall or inside the front door of conventional magazines. This placard shall have lettering at least 1-inch high and shall identify Class/Division in the left column and the maximum authorized quantity of explosives permitted in the magazine, by class and division as specified in the site approval (within parameters of paragraph 8-1.2.6) in the right column. For HC/D 1.4 material, when the magazine limitation is determined by the physical capacity, not the explosives limit, mission essential quantity (MEQ) will be entered in the right column. Storage that includes HC/D 1.2.1 or HC/D 1.2.3 material must include an MCE weight. Figure 7-1 provides a standard for posting these limits. Posted limits may reflect administrative reductions as authorized by paragraph 7-4.4. In addition to the explosive limit placard, placards indicating safety precautions and regulations for the specific material stored in the magazine must be posted near the limit placard. See paragraph 11-2.7 for a general discussion of placards and the option of providing the safety precaution in SOPs.

a. Special configuration magazines (e.g., ready service lockers, GOLAN, NABCO) that do not have adequate space for the full placard shown in figure 7-1 can list only the HC/D limits for the items approved for storage and use lettering that can be read at normal reading distance. The placards may be displayed on the magazine exterior if the internal configuration does not provide adequate space.

b. Magazine placards shall be kept current with the most recent storage authorization documents, such as site approvals or deviations. Fire and chemical hazard symbols shall be posted in accordance with paragraph 4-4.2.9.

NET EXPLOSIVES WEIGHT LIMIT	
Hazard Class/Division	Explosives Weight (lbs.) Permitted
1.1	
1.2.1	
(MCE)	( )
1.2.2	
*( )1.2.3	
(MCE)	( )
1.3	
1.4	

* Fragment distance specified in hundreds of feet for items in the open. See paragraph 7-8.2.7.

Figure 7-1. Standard NEW Posting Placard

7-4.4.3. Transfer Points.

7-4.4.3.1. Explosive Limits. The NEW authorized at a transfer depot, shipping or receiving shed, segregation facility, loading dock or in a barricaded siding shall be restricted to the lesser of (1) the quantity allowed for that type of ammunition and explosives considering distances to the PES; or (2) the quantity authorized for the particular transfer point as outlined in the appropriate subparagraphs of paragraph 12-9.

7-4.4.3.2. Posting Requirements. Explosive limits shall be conspicuously posted at all transfer points.

7-4.4.4. Piers and Wharves. Ammunition and explosives shall be moved from piers and wharves expeditiously and safely. It shall not be stored on piers or wharves except when staged for immediate loading or offloading of ships, barges, or other craft. The quantity of ammunition and explosives should be restricted to the smallest amount consistent with uninterrupted loading or offloading operations. The quantity of ammunition or explosives staged on a pier or wharf shall not exceed 500,000 pounds of NEW of HC/D 1.1 material, nor shall the approved wharf/pier limit be exceeded unless authorized by waiver. The quantity of ammunition to be considered when calculating the pier/wharf NEW includes cargo ammunition on ships, barges, or other craft alongside the pier or wharf as defined in paragraphs 7-10 through 7-10.3 and 7-10.12.

NOTE

Posting requirements at Naval Station piers and wharves need only be visible during ammunition and explosives operations.

7-4.5. MEASURING SEPARATION DISTANCES. When determining the maximum allowable quantity of explosives at a site, separation distances shall be measured along a straight line from the nearest wall of the structure containing the explosives to the nearest part of an exposed structure or site. When the structure is subdivided so that mass detonation between subdivisions will not occur, the separation distance shall be measured along a straight line from the nearest wall of the controlling subdivision.

7-4.5.1. Explosives in Stacks. When the total quantity of explosives in a magazine or operating building is separated into stacks so that the possibility of mass detonation is limited to the quantity in any one of the units, the separation distance shall be measured from the outside of the wall nearest the controlling explosives stack to the outside of the nearest wall of another structure. When stacks of explosives are not separated to prevent mass detonation, the total quantity in these sites shall be considered as a unit, and the separation distance shall be measured from the nearest outside wall or the nearest explosives location in the unit, as appropriate, to an ES.

7-4.5.2. Railcars or Motor Vehicles. When railcars and motor vehicles containing ammunition and explosives are not separated from a PES by intermagazine distance, the total quantity of explosives in the PES, railcars, and motor vehicles shall be considered as a unit, and the separation distance measured from the nearest outside wall of the PES, railcar, or vehicle, as applicable, to an ES. If the explosives at the PES are separated into smaller units as discussed in paragraph 7-4.5.1, the explosives in the adjacent railcars and motor vehicles shall be added to the quantity of the controlling inside unit or units, and the separation distance shall be measured from the wall nearest the controlling explosives unit, railcar, or vehicle, as applicable, to an ES.

7-4.5.3. Energetic Liquid Sites. Separation distances shall be measured from the closest hazard source: containers, buildings, or positive cut off point in piping, whichever is the most controlling. When buildings contain a small amount of cylinders or drums (refer to paragraph 7-15) or when quantities of energetic liquid are effectively subdivided, distances may be measured from the nearest container or controlling subdivision.

7-4.5.3.1. Incompatible Storage. Separation distances between energetic liquids of different storage compatibility groups shall be the inhabited building distance for the quantity and group that requires the greater distance. The above shall apply unless the energetic liquids are effectively subdivided by intervening barriers or by other means that positively prevent the liquids from mixing.

7-4.5.3.2. Compatible Storage. Compatible storages of different energetic liquids shall be separated by the greater intragroup storage distance.

7-4.5.4. Loaded Aircraft to Loaded Aircraft. Separation distances between loaded aircraft shall be measured between explosives on one aircraft to the explosives on adjacent aircraft. See paragraph 7-11.2.1.5 for further information.

7-4.5.5. Explosive Sites to Taxiways and Runways. Separation distance is measured from the nearest point of the ammunition and explosives site to the nearest point of the taxiway or to the centerline of the runway or the runway extended. See paragraph 7-11 for further airfield siting criteria.

7-4.5.6. Ship Unit Separation. Separation distance considerations in pier and wharf operations are described in paragraph 7-10.5.

7-5. HAZARD CLASSIFICATION PROCEDURES.

DoD Explosives Hazard Classification Procedures, NAVSEAINST 8020.8 (series), shall be used to assign hazard Classes/Divisions to all ammunition and explosives.

7-5.1. ENERGETIC LIQUID HAZARD CLASSIFICATION. The old hazard group (I-IV) compatibility group (A-F) classification scheme, referenced in previous editions of this manual for energetic liquids, has been replaced with a new system. The main hazard classification designator for energetic liquids is either Class 1 (explosives), Class 2 (compressed or liquefied gases), Class 3 (flammable liquids), Class 4 (flammable solids, self-reactive materials), Class 5 (oxidizers), Class 6 (toxic/infectious substances), Class 8 (corrosive), or Class 9 (miscellaneous). The design and logistics of modern weapons sometimes require that consideration be given to permitting storage or operations involving energetic liquids in a storage structure containing solid explosives. For example, it may be necessary to store hydrocarbon-fueled cruise missiles having high explosive warheads with fueled configurations not containing explosive warheads. Another example is the storage of liquid gun propellant with explosive ammunition components. Since two energetic liquids might each be compatible with certain explosive ammunition stores, but incompatible with each other, a two part compatibility group designation is assigned to an energetic liquid.

7-5.1.1. The first element is the standard storage and transportation Compatibility Group (CG) designation. The alpha designations are the same for UN hazard class 1, with the same definitions. However, for storage and handling on DoW facilities, a CG may also be assigned to an energetic liquid in a hazard class other than class 1. The absence of a CG indicates incompatibility with solid explosives.

7-5.1.2. The second element is a new Energetic Liquid Compatibility Group (ELCG) designation. The ELCG applies to mixed storage of energetic liquids or ammunition components containing energetic liquids. The ELCG is specified in parentheses as the last element of the hazard classification. The ELCG designations and definitions are:

LA – Energetic liquids that are strong oxidizers, mainly of acidic character. These materials may cause or contribute to the combustion of other material, possibly resulting in serious flare fires or explosions. Includes, but is not limited to, nitrogen tetroxide and mixed oxides of nitrogen (MON), inhibited red fuming nitric acid (IRFNA), liquid oxygen (LO_2), hydrogen peroxide (H_2O_2), and gels, slurries, or emulsions of the above.

LB – Energetic liquids that are readily combustible when exposed to, or ignited in the presence of an oxidizing agent, but that are not strong reducing agents. Some may be hypergolic with group LA materials. Includes, but is not limited to, hydrocarbons such as kerosene's and strained ring ramjet fuels; liquid hydrogen (LH_2); and gels, slurries, or emulsions of the above.

LC – Energetic liquids that are readily combustible when exposed to, or ignited in the presence of an oxidizing agent, and are also strong reducing agents. These will likely be hypergolic with group LA substances. Includes, but is not limited to, hydrazine's and other amines; and gels, slurries, or emulsions of the above.

LD – Energetic liquids that act mainly as combustible fuels, similar to groups LB and LC, when exposed to, or ignited in the presence of oxidizing agents but that may act as oxidizers in some combinations. They may be a monopropellant with the right catalyst, or may be pyrophoric and ignite upon release to the atmosphere. Examples are ethylene and propylene oxides, and boranes.

LE – Energetic liquids having characteristics that do not permit storage with any other energetic liquid. They may react adversely with either fuels (reducing agents) or oxidizers. Examples are nitromethane, nitrate ester based formulations such as OTTO Fuel II, liquid monopropellants containing hydroxyl ammonium nitrate (HAN), halogen fluorides (ClF_3 and ClF_5) and fluorine, and gels, slurries, or emulsions of the above.

7-5.1.3. Different energetic liquids in the same ELCG may be stored together with the exception of dissimilar liquids of group LE. Mixed storage is prohibited between energetic liquids of different ELCG designations, with one exception: liquids of groups LB and LC should not be stored together if possible, especially for storage areas containing primarily materials of group LB; however, mixed storage is permitted if circumstances require. This compatibility scheme is reflected in the hazard classification for the hydroxyl ammonium nitrate based liquid gun propellant XM-46:

Example: 1.3C(LE)

This hazard classification reflects CG "C" which indicates the propellant can be stored in the same magazine with CG "C" solid propellants, and since CG "C" can be mixed in storage with CG "D" (refer to table 3-10), CG "D" high explosive projectiles could also be present. On the other hand, hydrocarbon fuel such as JP-10 would not be permitted in this storage scenario, because its ELCG (LB) indicates incompatibility with the liquid gun propellant (LE).

7-5.1.4. Complete DoW hazard classification assignments for current energetic liquids are shown in table 7-5.

7-5.1.5. Each new energetic liquid, or new non-bulk packaging configuration of an energetic liquid, developed by a DoW component or adopted for DoW use, must be examined and assigned a hazard classification in accordance with the process described in NAVSEAINST 8020.8 (series).

7-5.2. MASS DETONATING HAZARD MATERIAL (CLASS/DIVISION 1.1). Ammunition and explosives that are considered mass-detonating hazards are designated HC/D 1.1. Damage from mass-detonating hazard materials is caused by concussion, blast, or by sympathetic detonation. Specified distances between these materials and between magazines that contain these materials shall be maintained in order to minimize the possibility of sympathetic detonation or propagation.

7-5.2.1. Extremely Insensitive Substance (EIS) and Extremely Insensitive Substance Ammunition. EIS is HC/D 1.1 explosive substance that, although mass-detonating, is so insensitive that there is negligible probability of initiation or transition from burning to detonation in transport or in storage. EIS ammunition is ammunition containing EIS which has demonstrated through test results that the mass and confinement effects of the ammunition case have a negligible probability of initiation or transition of burning to detonation in transport or storage. When intentionally initiated, this ammunition is incapable of propagating a detonation to ammunition of the same type.

7-5.2.2. EIS Hazard Classes. Substances that are candidates for designation as EIS or EIS ammunition shall be subjected to screening tests as outlined in NAVSEAINST 8020.8 (series). Required results as stated shall be achieved for qualification. With prior DWESO approval, EIS and EIS ammunition are assigned to hazard Classes/Divisions as indicated in table 7-6.

NOTE

When stored with compatible items of other ESQD classes, the most restrictive ESQD class will apply.

7-5.2.3. Dilute Explosive Criteria. Activities are permitted to store or handle dilute explosive materials provided the activity:

a. Ensures that the facilities used meet applicable safety standards for the assigned HC/D supplied by the manufacturer.

NOTE

Dilute explosive materials, for the purpose of this manual, are defined as evenly dispersed mixtures (for example, solution, suspension, colloid, or gel) of explosive materials (that is, a HC/D 1.1 or 1.3 material such as RDX, HMX, TNT, nitroglycerin, propellants, explosives, or pyrotechnics) and non-explosive and/or non-hazardous materials (for example, water, solvent, soil, gas, or polymer) that does not exhibit explosive characteristics (that is, not hazard classified as HC/D 1.1 or 1.3 materials).

b. Maintains an explosives safety program and facility capable of handling the undiluted explosives such as RDX, HMX, TNT, nitroglycerin, propellants, explosives, or pyrotechnics. Both personnel and programs must be in place that are familiar with and capable of safely handling the undiluted explosives in accordance with this manual, in the event it becomes necessary to do so.

c. Maintains an SOP that details nonemergency shutdown and cleanup procedures in case the material is inadvertently concentrated to the point that it exhibits explosive characteristics.

d. Maintains at least one individual who is qualified and certified to perform the nonemergency shutdown and cleanup procedures detailed in the SOP.

7-5.3. NON-MASS-DETONATING FRAGMENT PRODUCING MATERIALS (CLASS/DIVISION 1.2). The quantity distances specified for HC/D 1.2 ammunition achieve the desired degree of protection against immediate hazards from an incident. Events involving HC/D 1.2 items lob large amounts of unexploded rounds, components, and subassemblies, which will remain hazardous after impact. Such items are likely to be more hazardous than in their original state because of possible damage to fuze safety devices or other features by heat and impact. Many types of ammunition containing submunitions, such as cluster bombs, can be expected to be projected out to distances as great as the relevant inhabited building distances. Furthermore, it is impractical to specify quantity distances which allow for the maximum possible flight ranges of propulsive items.

Table 7-5. Hazard Classifications and Minimum Q-D for Energetic Liquids

Energetic Liquid	OSHA/NFPA Fuel[1] or Oxidizer[2] Class	DoW Storage Hazard Class	Minimum Q-D[3]
Hydrogen Peroxide, >60%	3 or 4[4]	5.1 (LA)	800[5] ft or table 7-41
IRFNA	3	8 (LA)	Table 7-41
Nitrogen Tetroxide/MON	2	2.3 (LA)	Table 7-41
Liquid Oxygen	N/A	2.2 (LA)	Table 7-42
RP-1	II	3 (LB)	Table 7-40
JP-10	II	3J (LB)	Table 7-40
Liquid Hydrogen	N/A	2.1 (LB)	Table 7-43
Hydrazine, >64%	II	8 (LC)	800[5] or 300[6] ft or Note 7
Aerozine 50 (50%N_2H_4/50% UDMH)	IB	6.1 (LC)	800[5] or 300[6] ft or Note 7
Methylhydrazine	IB	6.1 (LC)	800[5] or 300[6] ft or Note 7
UDMH	IB	6.1 (LC)	Table 7-40
Ethylene Oxide	IA	2.3 (LD)	HC/D 1.1 Q-D[8] with TNT Equiv. = 100%, or 800[5] or 300[6] ft.
Propylene Oxide	IA	3 (LD)	HC/D 1.1 Q-D[8] with TNT Equiv. = 100%, or 800[5] or 300[6] ft.
Nitromethane	IC	3 (LE)	Use HC/D 1.1 Q-D[8] with TNT Equiv. =100%[9] or table 7-40
Hydroxylammonium Nitrate (HAN)	2	8 (LE)	800[5] ft or table 7-41
XM-46 (HAN Monopropellant)	N/A	1.3C (LE)	8005 ft or use HC/D 1.3 Q-D
Otto Fuel II	IIIB	9 (LE)	Use HC/D 1.1 Q-D[10] with TNT Equiv. =100%, or 150[11] ft, or table 7-40
Halogen Fluorides (ClF_3/ClF_5)	4	2.3 (LE)	Table 7-41
Liquid Fluorine	4	2.3 (LE)	Table 7-41
Nitrogen Trifluoride	4	2.2 (LE)	Table 7-41
Nitrate esters (NG, TMETN, DEGDN, TEGDN, BTTN)	N/A	1.1D (LE)	Use HC/D 1.1 Q-D with TNT Equiv. =100%

NOTES:

1. Flammable or combustible liquid classification index based on flash point and boiling point versus criteria as specified in 29 CFR 1910.106 (OSHA) and NFPA 30, Flammable and Combustible Liquids Code. Primary descriptor is a Roman numeral, possibly with an additional letter.

2. NFPA oxidizer classification index as described in NFPA 430, Code for the Storage of Liquid and Solid Oxidizers. Descriptor is an ordinary number.

3. Positive measures for spill containment/control shall be taken for isolated storage of energetic liquids in accordance with applicable OSHA and NFPA guidance referenced in tables 7-40 and 7-41. For flammable energetic liquids and liquid oxidizers where only minimum blast or fragment distances are specified, applicable OSHA and/or NFPA guidance referenced in tables 7-40 and 7-41 respectively, should be used.

4. Hydrogen peroxide solutions of concentration greater than 91% are NFPA Class 4 oxidizers.

5. Should be used as a default value, unless otherwise hazard classified, when the material is packaged in small (non-bulk) shipping containers, porground support equipment, small aerospace flight vehicle propellant tanks, or similar pressure vessels that provide heavy confinement (burst pressure greater than 100 psi).

6. Should be used as a default value, unless otherwise hazard classified, when the material is packaged in small (non-bulk) shipping containers (DOT 5C or equivalent), porground support equipment, small aerospace flight vehicle propellant tanks, or similar pressure vessels providing a lower level of confinement (burst pressure less than or equal to 100 psi) and if adequate protection from fragments is not provided from terrain, effective barricades, nets, or other physical means (lightweight building construction is not adequate). If protection from fragments is provided, use the IBD/PTR Protected Distance column of table 7-43.

7. For large ready, bulk, or rest storage tanks (as defined in paragraphs 7-15.6.3, 7-15.6.5 and 7-15.6.6), use in table 7-43.

8. Where there is a reasonable risk of vapor cloud explosion of large quantities (for example, in bulk tank storage).

9. Technical grade nitromethane in unit quantities of 55 gallons or less in DOT approved containers listed in 49 CFR 173.202 may be stored as flammable liquids (table 7-40) provided the following apply:

a. Packages are stored only one tier high.

b. Packages are protected from direct rays of sun.

c. Maximum storage life of two years, unless storage life tests indicate product continues to meet purchase specification. Such tests are to be repeated at one-year intervals thereafter.

10. For underwater static test stands, when operated at hydrostatic pressure above 50 psig, or for propellant tanks or other vessels having burst pressures of greater than 100 psig without acceptable pressure relief devices (unless otherwise hazard classified). For underwater test stands, the TNT equivalence (MCE) should include the total propellant weight in all pumps and plumbing, as well as the weight of propellant held in tankage (under the test cell hydrostatic pressure) unless mitigation measures such as fuel line detonation arrestors and/or fuel tank isolation/barricading are used (as determined by hazard analysis).

11. Should be used as a default value, unless otherwise hazard classified, when the material is packaged in small vehicle propellant tanks, small (non-bulk) shipping containers, porground support equipment, or similar pressure vessels that provide relatively heavy confinement (burst pressure between 50-100 psig) without acceptable pressure relief devices.

Table 7-6. EIS and EIS Ammunition Hazard Classifications/Compatibility Groups

EIS loaded projectiles and/or warheads w/o fuzes or with EIS fuzes[1, 2]	1.6N
EIS fuzes[1]	1.4D, 1.4S, 1.6N
EIS loaded projectiles and/or warheads w/1.3 propelling charges and w/o fuzes or with EIS fuzes[1, 2]	1.2.1C, 1.2.2C, 1.4C, 1.3C
EIS loaded projectiles and/or warheads with non-EIS fuzes and w/o 1.3 propelling charges	1.2.3D[3, 4], 1.4D[4]
EIS loaded projectiles and/or warheads with non-EIS2, 4 fuzes and with 1.3 propelling charges	1.2.1E[3, 4], 1.2.2E[3,4], 1.4E[4]

NOTES:

1. "EIS Fuzed" means that the fuze has an EIS booster with an out-of-line non-EIS explosive and two or more independent safety features. The fuze must be certified as invulnerable to accidental detonation of the warhead.

2. Fuzed configuration must be tested for propagation. Fuzed HC/D 1.6 ammunition must contain either an EIS fuze or a non-explosive fuze (fuze contains no explosive); otherwise, the ammunition is classified as unit risk HC/D 1.2. Minimum fragment distance is based on hazardous fragment areal density requirements as determined for HC/D 1.2.

3. Unit risk Hazard Class/Division 1.2 may be justified on a case-by-case basis.

4. Fuze must have two or more independent safety features and independently classified Group D.

7-5.4. MASS FIRE HAZARD (HAZARD CLASS/DIVISION 1.3). Items in this division burn vigorously in storage situations and are very difficult if not impossible to extinguish. Normally, explosions shall be confined to pressure ruptures of containers and propagating shock waves or damaging blast overpressures will not occur beyond the magazine distances specified in table 7-20. The spread of fire may result from sprays of burning container materials, propellant, or other flaming debris. Toxic effects, such as occur from burning pyrotechnic items, normally will not exist beyond the inhabited building distances specified for this division.

7-5.4.1. Limited Quantities of HC/D 1.3. Limited quantities, not to exceed 10 pounds NEW, of HC/D 1.3 materials may be stored (including associated handling) without regard to the ESQD criteria of table 7-20, or the siting requirements of paragraph 8-1.2. The storage authorization is only for safety and security ammunition, HC/D 1.3 designated specifically for the safety and security of the installation. Other requirements, such as physical security, fire protection/fire maps, placarding and grounding, as outlined in paragraphs 2-1.15, 4-3, 4-4, and 6-8, respectively, must still be met. Authorization for HC/D 1.3 storage must be documented in writing through local procedures established by the activity region.

a. When combining HC/D 1.3 and 1.4, no more than 35 pounds total NEW can be stored, of which, no more than 10 pounds NEW can be HC/D 1.3.

b. The explosives safety officer (ESO) must ensure that all supporting documents and region approval/signed letter are uploaded into Marine Ammunition Knowledge Enterprise (MAKE).

7-5.5. MODERATE FIRE, NO BLAST (HAZARD CLASS/DIVISION 1.4). Items in this division present a fire hazard with minimal blast, fragmentation, or toxic hazard. Devices that contain explosives are not considered Class 1 if an inadvertent or accidental ignition during storage or transport will not result in fire, smoke, heat, loud noise, or visible damage to the outer packaging. Items hazard classified as HC/D 1.4S may be stored (including associated handling) without regard to the ESQD criteria of

table 7-22, or the siting requirements of paragraph 8-1.2. Other requirements, such as physical security, fire protection/fire maps, placarding and grounding, as outlined in paragraphs 2-1.15, 4-3, 4-4, and 6-8 respectively must still be met. Grounding is not required when storage is limited to small arms ammunition and 20mm (TP). Authorization for HC/D 1.4S storage must be documented in writing, through local procedures established by the activity ESO.

7-5.5.1. Limited Quantities of HC/D 1.4. Limited quantities, not to exceed 25 pounds NEW, of HC/D 1.4 materials may be stored (including associated handling) without regard to the ESQD criteria of table 7-22, or the siting requirements of paragraph 8-1.2. The storage authorization is only for safety and security ammunition, HC/D 1.4 designated specifically for the safety and security of the installation. Other requirements, such as physical security, fire protection/fire maps, placarding and grounding, as outlined in paragraphs 2-1.15, 4-3, 4-4, and 6-8, respectively, must still be met. Authorization for HC/D 1.4 storage must be documented in writing through local procedures established by the activity region.

a. When combining HC/D 1.3 and 1.4, no more than 35 pounds total NEW can be stored, of which, no more than 10 pounds NEW can be HC/D 1.3.

b. The ESO must ensure that all supporting documents and region approval/signed letter are uploaded into MAKE

7-5.6. VERY INSENSITIVE SUBSTANCE (CLASS/DIVISION 1.5). Items in this division are substances that although mass detonating, are so insensitive that there is negligible probability of initiation or transition from burning to detonation in transportation or storage.

7-5.7. EXTREMELY INSENSITIVE ARTICLE (CLASS/DIVISION 1.6). Items in this division contain EIS that have been demonstrated through tests described in NAVSEAINST 8020.8 (series), that mass and confinement effects of the ammunition case are negligible on the probability of initiation or transition from burning to detonation. Separation distances for HC/D 1.6 ammunition are provided in table 7-23. The weight of explosives shall take into consideration any propellant or pyrotechnic components if they contribute to the reaction. A maximum of 500,000 NEW pounds shall be permitted at any one location.

7-5.7.1. Collocation/Separation Requirements. HC/D 1.6 ammunition and explosives that are located with or located at less than magazine distance from HC/D 1.1 ammunition and explosives shall be treated as HC/D 1.1 for ESQD purposes. When HC/D 1.6 ammunition and explosives is located with or located at less than magazine distance from HC/D 1.2 ammunition and explosives, then HC/D 1.6 is considered HC/D 1.2 for ESQD purposes. HC/D 1.6 ammunition and explosives located with HC/D 1.3 or 1.4 ammunition and explosives shall be treated as HC/D 1.3 for ESQD purposes with a 500,000 pounds NEW limit at any one location.

7-5.8. CLASSES 1 OR 6 CHEMICAL AGENT HAZARDS. Items in these classes include chemical filled ammunition, chemical agents, and chemical filled components. Items that are both explosive and a chemical hazard are classified as HC/D 1.1 through 1.4 as appropriate. Nonexplosive chemical ammunition or bulk toxic agents are classified either as HC/D 2.3 (Poison A) or HC/D 6.1 (Poison B, Irritant). Depending on the type of chemical, its persistency, toxicity, and other characteristics, the primary safety consideration may be the area of chemical dispersal rather than blast or fragment distance. Thus, for combined chemical and explosives hazards, both HC/D 1.1 through 1.4 and HC/D 1.6 requirements shall apply. Items which contain riot control substances without explosive components are HC/D 6.1 but may be considered as HC/D 1.4G and stored in limited quantities with other base defense munitions. In accordance with the Chemical Weapons Convention, the DON does

not develop, produce, or otherwise acquire, stockpile, or retain chemical weapons as explained in paragraph 1-7.5.

7-6. FRAGMENTS AND FIREBRANDS.

The following standards apply to fragments and firebrands that occur as a result of an explosion.

7-6.1. GENERAL. A hazardous fragment is one having an impact of 58 ft lb or greater and are classified as primary or secondary fragments, depending on their origin.

7-6.1.1. Primary Fragments. Primary fragments result from the shattering of explosive containers. The container may be the casing of conventional ammunition: the kettles, hoppers, or other metal containers used in the manufacture of explosives, the metal housing of rocket engines, or similar items. These fragments are usually small in size and initially travel at velocities of thousands of feet per second.

7-6.1.2. Secondary Fragments. Secondary fragments form as a result of high blast pressures on structural components and items close to the explosion. They are larger than primary fragments and initially travel at velocities of hundreds of feet per second.

7-6.2. MINIMUM ESQD REQUIREMENTS. The minimum distance for protection from hazardous fragments shall be based on primary and secondary fragments from the PES and the population and/or traffic density of the ES. It is defined as the distance at which the density of hazardous fragments becomes 1 per 600 ft^2.

NOTE

This distance is not the maximum fragment range. Secondary fragments include debris such as that from structural elements of the facility and from non-confining process equipment likely to rupture into enough pieces to include items such as those discussed in paragraph 7-6.1.1, and those from items listed in table 7-8. DWESO approved analyses and/or approved tests may be used to determine minimal distances for both primary and secondary fragments. DWESO Technical Paper No. 13 is an example of a method to determine minimal distances for building debris, while U.S. Army Corps of Engineers publications HNC-ED-CS-98-1, “Methods for Predicting Primary Fragmentation Characteristics of Cased Explosives” and HNC-ED-CS-98-2, “Methods for Calculating Range to No More than One Hazardous Fragment per 600 Square Feet” provide similar information for primary fragments. In the absence of appropriate analyses and/or tests, default hazardous debris distances defined below apply.

7-6.2.1. Hazardous Fragment Distance for Class/Division 1.1 Items up to 450 Pounds NEW. For all types of HC/D 1.1 in quantities up to 450 pounds NEW, the hazardous fragment distance (HFD), which equates to IBD, will be determined as follows:

7-6.2.1.1. For HC/D 1.1 in a 7-Bar or a 3-Bar ECM, use “Earth-Covered Magazine” distances shown in table 7-7 as discussed in paragraph 7-8.1.5. Intraline criteria will be in accordance with paragraph 7-8.1.5.1.

7-6.2.1.2. For HC/D 1.1 in an Undefined ECM, where the loading density [NEW (lbs)/internal magazine volume (ft^3)] is <0.028 lbs/ft^3, use “Earth-Covered Magazine” distances shown in table 7-7 as discussed in paragraph 7-8.1.5. Intraline criteria will be in accordance with paragraph 7-8.1.5.1.

7-6.2.1.3. For HC/D 1.1 in an Undefined ECM where the loading density is >0.028 lbs/ft^3, use “Earth-Covered Magazine – side and rear” distances of table 7-7 and for front exposure, apply the greater of “Earth-Covered Magazine – front” IBD distance of table 7-7 or the HFD from table 7-9 for the NEW in the ECM; if the ECM headwall meets the definition of AGS (H) in the legend for table 7-15, use the "STRUCTURE" column of table 7-9. Otherwise, use the "STRUCTURE" column for non-primary fragment-producing explosives or the "OPEN" column for primary fragment-producing explosives. PTR is 60% of IBD or HFD, as applicable. Intraline criteria will be in accordance with paragraph 7-8.1.5.1.

7-6.2.1.4. Where ECM, regardless of structural designation, have been designed, analyzed, or tested to have a reduced IBD and have been approved by the DWESO, use the approved IBD. PTR is 60% of IBD. Intraline criteria will be in accordance with paragraph 7-8.1.5.1.

7-6.2.1.5. For HC/D 1.1 in a structure (excluding ECM) capable of stopping primary fragments, but which can contribute to the debris hazard, use hazardous fragment distances found in the "structure" column of table 7-9. Intraline criteria will be in accordance with paragraph 7-8.1.5.1. Structures that are capable of stopping primary fragments include all heavy wall (H) and heavy wall/roof (H/R) aboveground sites (AGS), as defined in the legend of table 7-15. Doors and other openings through which primary fragments could exit must be capable of stopping primary fragments from exiting the facility or will be barricaded in accordance with paragraph 8-2.5 to trap primary fragments that could exit the facility.

7-6.2.1.6. For primary fragment-producing HC/D 1.1 in the open or in a structure incapable of stopping primary fragments, use HFD listed in the "open" column of table 7-9. Intraline criteria will be in accordance with paragraph 7-8.1.5.1. Structures (other than ECM) that are capable of stopping primary fragments include all heavy wall (H) and heavy wall/roof (H/R) AGSs as defined in the legend of table 7-15. All other structures (other than ECM) are considered incapable of stopping primary fragments. PTR is 60% of HFD.

7-6.2.1.7. For non-primary fragment-producing explosives in any structure (excluding ECM), truck, trailer, or railcar that may contribute to the debris hazard, use the hazardous fragment distance listed in the "structure" column of table 7-9.

7-6.2.1.8. Selected items have been evaluated for minimum HFD with results shown in table 7-8. Other items, through testing, have been hazard classified with a specific HFD presented in the format HC/D (xx) 1.1. The HFD for these items is specified in hundreds of feet (in parentheses), and they may not be listed in table 7-8. The distances for these two categories of select items apply only to items in the open. When in facilities, secondary debris as well as primary fragments must be considered. In a facility that can contain primary fragments, apply criteria of paragraph 7-6.2.1.1 through 7-6.2.1.5 above. If in a facility that cannot stop primary fragments, use the greater distance from table 7-8 (for the item being considered) or the HFD associated with the (xx) 1.1 item or from the "OPEN" column of table 7-9 for determining the applicable HFD. PTR distance is 60% of HFD. Intraline criteria will be in accordance with paragraph 7-8.1.5.1.

NOTE

Reduced distances as provided in appendix F, paragraph F-10.10 can be applied to energetic materials in quantities less than 0.5 pound NEW where a Mishap Risk Assessment (MRA), performed in accordance with paragraph 7-7.3 demonstrates no other hazards such as firebrand or fragments will exceed these distances. An explosives safety site approval must be obtained for all facilities or operations in accordance with chapter 8. The site approvals will authorize a specific explosives limit by HC/D of material, based on the hazard involved (that is, remote operation, intentional detonation, attended operation). Emerging requirements for operational changes need not be resubmitted for site approval, provided the proposed operations do not exceed the existing explosives limit or the level of hazard to personnel and nearby facilities. Changes in use or mission of an explosives facility will be reviewed by the Operations Safety Committee (OSC) to ensure the site approval parameters have not been exceeded.

7-6.2.1.9. For bare explosives in the open, distance is computed by the formula $d=40W^{1/3}$.

7-6.2.1.10. Hazardous Fragment Distance for Class/Division 1.1 Items in the Range 451 to 30,000 Pounds NEW. For HC/D 1.1 NEWs in the range 451 to 30,000 pounds, HFD will be determined according to the below criteria. PTR distance is 60% of the HFD, and intraline criteria, as applicable, will be in accordance with paragraph 7-8.1.5.1 or 7-8.1.5.2.

7-6.2.1.10.1 The minimum HFD will be 1,250 feet, as shown in table 7-7. Lesser distances are permitted if supported by a structural analysis. Facilities sited at 1,235 feet or 1,245 feet per past standards will be considered to be in compliance with the 1,250 foot minimum requirement.

7-6.2.1.10.2 For HC/D 1.1 in a 7-Bar or a 3-Bar ECM, used “Earth-Covered Magazine” distances shown in table 7-7 as discussed in paragraph 7-8.1.5.

7-6.2.1.10.3 For HC/D 1.1 in an Undefined ECM, where the loading density is <0.028 lbs/ft^3, use “Earth-Covered Magazine” distances shown in table 7-7 as discussed in paragraph 7-8.1.5.

7-6.2.1.10.4 For HC/D 1.1 in an Undefined ECM with minimum internal dimensions of 26 feet wide by 60 feet long, use “Earth-Covered Magazine – side and rear” distances of table 7-7 and “other PES” distance for the front exposure.

7-6.2.1.10.5 For HC/D 1.1 in an Undefined ECM where the loading density is > 0.028lbs/ft^3 and internal dimensions are less than 26 feet wide by 60 feet long, use "other PES" distances of table 7-7 for front, side, and rear exposures.

7-6.2.1.10.6 Selected items have been evaluated for minimum HFD with results shown in table 7-8. Other items, through testing, have been hazard classified with a specific HFD presented in the format HC/D (xx) 1.1. The HFD for these items is specified in hundreds of feet (in parentheses), and they may not be listed in table 7-8. The distances for these two categories of select items apply only to items in the open. PTR is 60% of HFD. When these items are placed in a facility, apply the criteria of paragraph 7-6.2.1.10.1 through 7-6.2.1.10.6.

7-6.2.1.10.7 For bare explosives in the open, distance is computed by the formula $d=40W^{1/3}$.

7-6.2.1.11. For HC/D 1.1 NEWs > 30,000 pounds, HFD will be in accordance with table 7-7. Lesser distances are permitted if supported by a structural analysis. PTR is 60% of HFD and intraline criteria, as applicable, will be in accordance with paragraph 7-8.1.5.1 or 7-8.1.5.2. The following apply to use of the reduced "Earth-Covered Magazine" distances shown in table 7-7 for the NEW range between 30,000 pounds and 250,000 pounds:

7-6.2.1.11.1 For HC/D 1.1 in a 7-Bar or a 3-Bar ECM, where internal dimensions are a minimum of 26 feet wide by 60 feet long, use "Earth-Covered Magazine" distances.

7-6.2.1.11.2 For HC/D 1.1 in a 7-Bar or a 3-Bar ECM, where internal dimensions are less than 26 feet wide by 60 feet long, use "Other PES" distances for front, side, and rear exposures.

7-6.2.1.11.3 For HC/D 1.1 in an Undefined ECM, where internal dimensions are a minimum of 26 feet wide by 60 feet long, use "Earth-Covered Magazine – side and rear" distances and "Other PES" distance for the front exposure.

7-6.2.1.11.4 For HC/D 1.1 in an Undefined ECM, where internal dimensions are less than 26 feet wide by 60 feet long, use "Other PES" distances for front, side, and rear exposures.

7-6.2.2. Minimum ESQD for Sparsely Populated Locations. The minimum fragment distance can be reduced to 900 feet (270 m) if certain specific conditions exist as follows:

a. No more than 25 persons are located in any sector bounded by the sides of a 45 degree angle, with the vertex at the PES, and the 900-foot (270 m) and 1,250-foot (380 m) arcs from the PES. If more than 25 persons are located within the sector at any one time, as it is rotated 360 degrees, a 1,250-foot arc must be used.

b. The NEW of the PES does not exceed 11,400 pounds (5,170 kg NEQ).

These minimum fragment distance reductions may not be applied to public traffic routes (even those to which IBD is required, such as a joint DoW/Non-DoW use runway, or a high traffic density road).

7-6.2.3. Minimum Distances for Public Traffic Routes (Roadways). For PTRs, the minimum fragment and debris distance for HC/D 1.1 ammunition and explosives shall be based on the traffic density, considered at three levels: high traffic density, medium traffic density, and low traffic density. The traffic density shall be averaged over a normal (non-holiday) week in terms of number of passengers during a 24-hour period. Minimum fragment distance reductions based on sparse population considerations addressed in paragraph 7-6.2.2, do not apply to PTRs, even those to which IBD is required, such as a joint DoW/Non-DoW use runway, or at a high traffic density road.

NOTE

In applying criteria other than the default values given in paragraph 7-6.2.3.1 through 7-6.2.3.3 below (which are based on car (and rail) speed of 50 mph (80 Km/h), and a ship speed of 10 mph (16 Km/h), considerations such as the following shall be taken into account to establish acceptable exposure: speed of vehicles, number of passengers per vehicle, protection afforded by the vehicle, variation in daily traffic levels in relation to explosives activities, and seasonal traffic trends. The default values of two passengers per car may be used to estimate traffic density.

7-6.2.3.1. High Traffic Density. If routes have 10,000 or more (car and/or rail) passengers per day, or 2,000 or more ship passengers per day, then inhabited building distance criteria described in paragraph 7-6.2 and provided in table 7-7 apply.

7-6.2.3.2. Medium Traffic Density. If routes have 400 or more, but less than 10,000 (car and/or rail) passengers per day, or 80 or more, but less than 2,000 ship passengers per day, then 60% of the specified minimum fragment distance for inhabited building distance applies. Medium traffic density criteria for minimum fragment distance apply, as a minimum, to recreational activity that is extensive and occurs on a regular basis.

7-6.2.3.3. Low Traffic Density. If routes have less than 400 (cars and/or rail) passengers per day, or less than 80 ship passengers per day, then no minimum fragment distance is required. Minimum distance shall be based on blast criteria (K24/K30) only calculated using formulas in paragraphs 7-9.3.1, 7-9.4, and 7-9.5.1.

7-6.2.3.4. On-Base Roads. Installation-related personnel transiting the ESQD arc of a PES may be provided protection of less than 60% of inhabited building distance (IBD), provided the risks are evaluated and documented and approval is obtained from NOSSA. When such exposure is determined to be necessary, procedures must be established to inform transients of potential risks (for example, written acknowledgement of the risk, by vendors or others with a recurring need to transit the ESQD arc, warning signs, flashing lights, physical barriers, etc.). Request for approval to provide protection of less than 60% of IBD should be submitted in the format of a site approval request in accordance with paragraph 8-1.2.4. These requests do not need to follow the submission chain defined in paragraph 8-1.2.1, but must be submitted from the activity through the regional commander, where applicable, to NOSSA, with copies to CNO (N4L), the applicable Naval Facilities Engineering Systems Command (NAVFAC) and NOSSA Atlantic/Pacific (N9L/N9P). Marine Corps activities will submit requests to NOSSA in accordance with the site approval review procedures defined in MCO 5100.29 Volume 8 (series). In addition to the information required by paragraph 8-1.2.4, the request must be supported by a qualitative risk assessment considering the following factors:

a. Operational necessity

b. Definition of the operation being performed (for example, static storage, maintenance, and production).

c. Operational activity cycle.

d. Alternate routes available.

e. Traffic density.

f. Accident records.

g. Time interval of exposure.

h. Type and quantity of munitions in proximity to the area transited.

i. The closest distance from the area transited to the PES.

j. The need for installation-related personnel to transit the ESQD arc.

NOTE

Effective 1 October 2000, all new construction of ammunition and explosives storage and operating facilities, and any change in operations within existing facilities that increases the explosives safety risk should provide both the general public and installation-related personnel who are not involved in munitions-related operations protection equal to or greater than 60% of IBD.

7-6.2.3.5. Review of On-Base Road Exposure. Roads accepted at less than 60% of IBD will be reviewed by each explosives safety inspection (ESI) and Regional Explosives Safety Review Board (RESRB). These reviews will validate that the conditions established by the approval package have not changed in a manner that would increase exposure of personnel transiting the ESQD arc. If variations are noted, the activity will be instructed to submit a request for revalidation of the approval. Additionally, each activity is responsible for monitoring the approved exposures for changes that would require resubmission to the approving authority.

7-6.2.4. Minimum Distances for Public Traffic Routes (Other Than Roadways). For exposures, other than roadways, which are permitted at PTR distances (paragraphs 7-9.3, 7-9.4, and 7-9.5) fragment and firebrand distance minimum for HC/D 1.1 explosives shall be at least 60% of the specified minimum fragment distance for inhabited building distance.

7-6.2.5. Application of Minimum Fragment and Firebrand Distances. The larger of the minimum fragment/firebrand distance and the minimum ESQD apply between the PES and the following:

a. Installation boundaries, unless manifestly inapplicable (unsuitable terrain, government land not open to the public, etc.).

b. Administration and housing areas.

c. Athletic and other recreation areas except those described below.

d. Flight line passenger service functions.

e. Main powerhouses that provide vital utilities to a major portion of the installation.

f. Shops and inert storage that because of their vital, strategic nature, or high intrinsic value of their contents, should not be placed at risk.

g. Functions that, if momentarily rendered inactive, will cause an immediate secondary hazard because of their failure to function.

h. Private vehicles parked in administrative areas.

7-6.2.6. Exceptions to Minimum Fragment and Firebrand Distances. Minimum fragment and firebrand distances are not required for the following:

a. Recreation or training facilities used exclusively by personnel assigned to the PES.

b. Related and support functions that are DoW controlled and for which intermagazine and intraline distances are the usual protection levels.

c. Maintenance, supply, and training facilities, operations offices serving the logistics and operations functions of combat aircraft. Marine delivery or ammunition supply units that are battalion size or smaller, separate air defense firing batteries, and a single pier or wharf for which ammunition at the PES is intended.

d. Between PES and inert storage, whether in a facility or in the open.

e. Between facilities in an operating line, between operating lines, and between operating lines and storage locations when inhabited building distances are used to protect workers and guard against interruption of production.

7-6.2.7. Approved Torpedo and Tactical Weapons Handling. The fragment and firebrand minimum distance requirements for HC/D 1.1 ammunition is authorized for handling limited quantities of torpedoes and other weapons listed in table 7-8. When the quantity present in the handling area at any one time does not exceed the quantity in table 7-8, the minimum distance requirements for the respective number of weapons may be applied. When any weapon is present in a greater quantity than specified on table 7-8, a minimum distance of 1,250 feet shall apply. The reduced minimum distance applies:

a. At naval activities such as naval stations, submarine bases and other activities where only limited handling is authorized.

b. When handling torpedoes or tactical weapons at fleet ballistic missile (FBM) sites that are supported by a submarine tender providing all missile tube hatches on tubes that contain missiles other than AIMs are closed during handling on both the unit doing the handling and on other submarines on the same side of the tender.

c. At explosives handling wharves at Submarine Nuclear Ballistic Missile (SSBN) bases Bangor and Kings Bay providing all missile tube hatches on tubes that contain missiles other than AIMs are closed during handling on both the unit doing the handling and on other submarines located at the same berth. Under no circumstances shall missile, torpedo or other weapon handling be conducted concurrently on submarines nested alongside a tender, regardless of which side they are on, or on submarines moored at the same berth of an explosives handling wharf [see OPNAVINST 8020.14 (series)]. When the 500-foot ESQD arc is used during the handling of torpedoes from motor vehicles, the conditions specified in table 7-8, General Comments e. and f. apply. The barricade is not required during handling from boats, torpedo transporters, forklifts, or portable cranes. Sand barricade construction details can be obtained from Naval Surface Warfare Center Indian Head Division (NSWC IHD), Indian Head, Maryland.

d. A 600-foot ESQD arc may be used for two to four TOMAHAWK missiles. Two TOMAHAWK missiles in their launch capsules and shipping containers may be loaded side-by-side in a nose-to-tail configuration on the bed of a truck which is driven onto a pier. A maximum of two additional TOMAHAWK missiles in their launch capsules may be removed from a nearby submarine if placed in a nose-to-tail configuration in specially positioned chocks, so that each group of two missiles is off-set from the other group by a 10-foot side-by-side distance and 5-foot nose-tail.

e. A 700-foot minimum ESQD can be used for SPARROW (AIM-7) missiles (except with Warhead WAU-17) provided that the warheads of all adjacent AIM-7 missiles are separated by at least 5 inches and if SIDEWINDER (AIM-9) missiles are present, all AIM-7 warheads are separated from all AIM-9 warheads by at least 22 inches or warheads not meeting these separation requirements are radially aligned; that is, they are forward of, or to the rear of, each other. In addition, a stack of missiles in all-up-round (AUR) containers has a maximum credible event (MCE) of four warheads, thus a 700-foot ESQD may be used.

f. The minimum ESQD for the WAU-17 warhead is 400 feet for detonation of one to four warheads. AIM-7 missiles with WAU-17 warheads in the CNU series AUR container may use a 400-foot ESQD for any storage configuration except when vertically stored. In the case of vertical storage, containers in any vertical stack must be alternated nose-to-tail in order to allow use of a 400-foot ESQD.

g. A 400-foot minimum ESQD can be used for AIM-9 missiles provided adjacent AIM-9 warheads are separated by at least 22 inches from each other or, if this separation distance cannot be satisfied, the warheads are not radically aligned. In addition, missiles stored in CNU series AUR containers have a MCE of four warheads, thus a 400-foot ESQD may be used.

h. When transporting mixed trailer loads of missiles, if the foregoing warhead-to-warhead separation requirements cannot be satisfied, the following criteria will determine the total NEW required to be used for ESQD purposes:

(1) For trailers carrying AIM-7 missiles without the WAU-17 warhead and AIM-9 missiles, the effective NEW for ESQD determinations regarding the trailer is based on the total of all missiles that do not have a 22-inch minimum separation between AIM-7 and AIM-9 missiles.

(2) For trailers carrying AIM-7 missiles with the WAU-17 warhead and AIM-9 missiles, the effective NEW for ESQD determinations regarding the trailers is based on the total of those AIM-7 and AIM-9 missiles which are in radial alignment.

i. When loaded on aircraft, AIM-7 (except with WAU-17 warhead) and AIM-9 missiles that meet the separation requirements of paragraphs 7-6.2.7.e and 7-6.2.7.g have a MCE of one missile. AIM-7 missiles with WAU-17 warhead loaded on fuselage stations will not propagate to another missile through the fuselage, even though they may be in radial alignment, thus the MCE is also one missile.

7-6.2.8. Loading of Torpedoes and Tactical Weapons Onboard Ships. Explosive handling evolutions between a wharf or pier and submarine or surface combatant considers the ammunition and explosives material secured onboard when the material is lowered below an open deck or positioned behind the outer skin of the ship. At such time the NEW of the material no longer contributes to that on the pier. This criteria is directly applicable to loading torpedoes and conventional ordnance items. Missiles being loaded into Vertical Launch System (VLS) tubes or above deck launch canisters will be secured when they are inserted into the launcher and the crane hook removed whether or not the entire missile is

within the launcher. The exception to this rule involves missile handling on SSBNs and SSGNs, as defined in paragraph 7-10.1.

7-6.2.9. Fragment Distances Apply to Propulsive Units. Because it is not possible to specify separation distances that correspond to the designed flight range of rockets, missile motors, catapults, and other propulsive units, the flight range is disregarded. However, the appropriate fragment distance will be used to establish the distance required for protection from fragments resulting from accidents involving propulsion units.

7-7. PERSONNEL PROTECTION.

Blast, fragment, and thermal hazard protection principles apply to all operations and facilities where personnel are exposed to ammunition or explosives hazards during industrial processing, manufacturing, maintenance, renovation, demilitarization, and similar operations. UFC 3-340-02 contains design procedures to achieve personnel protection as required by these regulations, to protect facilities and equipment from damage by blast, fragments and debris, and to prevent propagation of explosions.

7-7.1. REQUIREMENTS. The commanding officer shall determine the personnel limits inside or in the vicinity of operating buildings, magazines and magazine areas, transfer points, and pier and wharf area buildings, as well minor adjustments within individual rooms of operating buildings from those established by site approval. This determination shall be based on the type of building or area, the nature of the work involved, and the degree of hazard present. Determination of personnel limits requires that tasks not necessary to a particular hazardous operation be prohibited within the immediate vicinity of the hazard, unnecessary personnel be prohibited from visiting the location, and the layout of concurrent operations in a single building or area be planned to subdivide the operations using substantial dividing walls, fire walls, operational shields, or other barricades. The number of personnel allowed in the vicinity of ammunition or explosives or on a given job shall, as much as possible, be kept to the minimum required for properly performing the work safely and efficiently. However, no employee shall be permitted to work alone in a location if assistance from another person is not available immediately in the event of an accident. When establishing personnel limits, provisions shall be made for persons not actually engaged in the work being performed in the area. The inclusion of such personnel will permit the entry of inspectors, supervisors, and visitors into posted areas without stopping operations. Unauthorized personnel shall be strictly prohibited. The supervisor or other specifically designated persons shall be responsible to see that personnel limits are not exceeded. Operations shall be stopped in any operating building or area if, for any reason, the number of persons authorized by posted limits is exceeded.

7-7.2. POSTING PERSONNEL LIMITS. Placards stating the maximum permissible number of personnel (including both workers and transients), allowed in a building, cubicle, cell, room, or other similar space that contains ammunition, explosives, or other hazardous materials, shall be conspicuously posted. Personnel limits do not need to be posted in magazines, magazine areas, transfer points, aircraft loading areas, and pier and wharf areas. The placards shall be kept current and shall use lettering defined in paragraphs a and b below:

a. One-inch minimum height for lettering on signs in service magazines, press cells, drill rooms, fuzing or defuzing cells, pyrotechnic mixing or pressing cells, rooms containing remotely controlled equipment, and rooms of similar size or used for similar functions.

b. Three inches minimum height for lettering on signs in operating building areas including, but not limited to, inert preparation rooms, assembly rooms, melt-pour and cooling areas, finishing rooms, and paint spray rooms.

7-7.3. HAZARD ANALYSIS. A MRA of risks shall be performed on all new or modified industrial operations and facilities other than previously-approved standard designs that involve ammunition and explosives. Based on this analysis, engineering design criteria shall be developed for selecting equipment, shielding, engineering controls, and protective clothing for personnel appropriate for the facility or operation. There are several methods that can be used when conducting an MRA. The method selected can be based on the capability of the method to thoroughly identify all hazards, defects, failures, possibilities, etc. for the facility, process, or operation being analyzed. The following methods may be used when conducting a hazard analysis:

a. Process Hazard Analysis

b. Preliminary Hazards Analysis (Task 202 of MIL-STD-882 (series))

c. Hazard and Operability Study (HAZOP)

d. Failure Mode and Effect Analysis (FMEA)

e. Fault Tree Analysis

f. An appropriate equivalent method

7-7.4. PROTECTION MEASURES. Protective measures shall be taken to protect personnel where explosion hazards exist.

7-7.4.1. Protection Requirements. Personnel shall be provided with protection from potential blast overpressures, hazardous fragments, and thermal effects including respiratory and circulatory hazards, if hazard assessments performed in compliance with paragraph 7-7.3 indicate the probability of an accidental explosion producing overpressures and hazardous fragments, or when accidental flash fires with thermal hazards is above an acceptable risk level determined on a case-by-case basis by NOSSA through the site approval process. The protection afforded all personnel must be capable of limiting incident blast over-pressure to 2.3 psi, fragments to energies of less than 58 ft lb, and thermal fluxes to prevent the onset of second degree burns (heat fluxes and exposure times experienced by personnel should be less than that given by the equation $\boxed{t = 200q^{-1.46}}$ where "*t*" is the time in seconds that a person is exposed and "*q*" is the received heat flux in kW/m2). These protection levels shall be certified through analysis for cases where personnel are at distances less than K24, 88 feet minimum, or for situations where personnel are located in the same structure as the operation. Personnel protection may be required beyond the K24 distance, 88 feet minimum, if the risks from the MRA are deemed unacceptable. Shields complying with MIL-STD-398 (series) are acceptable protection.

NOTE

RDT&E facilities constructed and approved for construction with control rooms sited at K18 distance may continue to be used for their original use provided the current hazards are not greater than those assumed for the facility's original use. Correction of facility siting shortfalls will be required when the hazards are increased, use of the facility changes or significant improvements are planned for any facility involved. At such time, the facilities involved will be required to meet all current explosives safety criteria. Continuation of operations at less than $D = 24W^{1/3}$ is also permissible if DWESO approval is obtained for an engineering analysis that can demonstrate the required degree of safety is provided through protective construction or other specialized safety features.

7-7.4.2. Protection Techniques. Personnel protection requirements of paragraph 7-7.4.1 may be achieved in one or more of the following ways:

a. Elimination or positive control of ignition and initiation stimuli.

b. Sufficient distance or barricades to provide protection from blast or fragments.

c. Installing fire detection and extinguishing/suppression systems in areas or facilities where exposed, thermally energetic materials have a high probability of ignition and would result in a large thermal output. The system must be sufficiently quick acting and large enough to extinguish/suppress potential flash fires in their incipient stage. It should be designed to maximize the speed of detection and the application of the extinguishing agent.

d. Use of thermal shielding between the thermal source and the personnel in ammunition operational areas where it is essential for workers to be present, and the hazard assessment indicates an in-process thermal hazard. If shields are used, they must comply with MIL-STD-398 (series). If shielding is not possible, or if the shielding provided is inadequate to protect exposed personnel, especially their respiratory and circulatory systems, it may be necessary to augment protection with improved facility engineering design and personal protective clothing and equipment.

e. Thermal protective clothing must be capable of limiting bodily injury to prevent second degree burns (heat fluxes and exposure times experienced by personnel should be less than that given by the equation $\boxed{t = 200q^{-1.46}}$ where "*t*" is the time in seconds that a person is exposed and "*q*" is the received heat flux in kW/m2) with personnel taking turning evasive action) when the maximum quantity of combustible material used in the operation is ignited.

f. Protective clothing selected must provide respiratory protection for personnel from hot vapors and their toxicological effects, if the hazard analysis indicates that adverse effects will result from the inhalation of combustion products.

7-7.4.3. Construction Worker Authorization (CWA). When construction personnel must, on a temporary basis, be within K18 intraline distance from a PES, they shall be provided the maximum practical protection from the effects of an explosion at the PES. Approval authority for construction workers within K18 intraline distance of a PES is dependent on the work involved, amount of time the workers will be present and type of facilities affected. CWA submission guidance is provided below.

a. Routine maintenance and repair work conducted inside K18 intraline distance can be approved at the installation ESO level. Local procedures will be developed for requesting and approving routine maintenance and repair work. Examples of routine maintenance are provided in paragraph 8-1.1.

b. Maintenance and repair work conducted inside K18 intraline distance that is not routine and does not alter/modify the facility, Lightning Protection System (LPS), grounding system, utilities systems to include electrical communication and security systems and/or change the currently sited operation will be submitted to Regional Explosives Safety Officer as a CWA. Documentation requirements for CWA will contain the information for a CWA identified in NOSSAINST 8020.22 (series) and clearly address all compensatory measures. Regional approval will address compensatory measures and these measures will be implemented by the installation before the commencement of construction, any worker specific measure will be addressed in the CWA hazard control brief. Marine corps activities will submit CWA request to the Regional Explosives Safety Officer via the EES portal.

c. Maintenance and repair work that is not routine and affects an explosives facility will be submitted via the chain of command to NOSSA for Navy activities and MARCORSYSCOM for Marine Corps activities as a CWA through WebSAR or EES portal. Documentation requirements for CWA submitted to NOSSA are contained in NOSSAINST 8020.22 (series) and MCO 5100.29 Volume 8 for Marine Corps.

7-8. DEGREE OF SAFETY PROTECTION.

Explosives safety quantity-distances are not absolutely safe distances, but are empirically derived to provide relative protection. The degree of protection afforded by each type of separation distance is discussed in the following paragraphs with respect to inhabited building, PTR, magazine, and intraline distances and ship unit separations.

7-8.1. CLASS/DIVISION 1.1 HAZARDS. Items in this division include most of those that explode virtually instantaneously when a small portion is subjected to fire, to severe concussion or impact, to the impulse of an initiating agent, or to the effect of a considerable discharge of energy. These explosions normally will cause severe structural damage to adjacent objects and the simultaneous explosion of explosives and ammunition stored sufficiently close to the initially exploding pile. The ESQD requirements for HC/D 1.1 items are as follows.

7-8.1.1. Inhabited Building Distances. Inhabited building distances are the minimum permissible distances between a PES and an inhabited building. An inhabited building is any structure, other than an explosives operating building, that is used in whole or in part for human habitation or place of assembly. Inhabited building distances also shall be provided between a PES and the boundary of a shore activity. When determining inhabited building distances, use table 7-7. Table 7-8 may be used to determine separation distances for selected HC/D 1.1 items.

7-8.1.1.1. Degree of Protection. Inhabited building distances provide protection against serious injuries or death. However, stray fragments, window frames, doors or other hazardous objects may be torn loose by an explosion and increase the chances of serious injury or death. Some injuries will occur from broken glass, but most will not be serious. Inhabited building distances are based on damage from blast effects and therefore provide good protection against the small number of stray fragments that may be thrown beyond these distances. Inhabited building distances also represent the distances at which structures will undergo damage that is readily repairable, such as broken window glass, falling plaster, and possibly damage from fragments. Minor damage is not considered substantial structural damage.

7-8.1.1.2. Structural Considerations. Inhabited building distances are designed to protect buildings against substantial structural damage. However, the degree of protection afforded varies with the type of structure.

a. Stone, Brick or Masonry Buildings. Serious weakening or displacement of portions of supporting walls, foundations, side walls, or interior supports, and the breaking of rafters or other important roof supports or floor joints may occur.

b. Frame Buildings. Serious weakening or displacement of foundations, breaks in any of the main supports in side walls or interior supporting walls, and breaks in any of the main supports of the roof or floors may occur.

c. Reinforced Concrete Structures. Serious displacement of any floor, wall, or ceiling structural member, or the failure of any supporting member may occur. See paragraph 8-1.3 for requirements for protective construction.

7-8.1.1.3. Limitations of Protection. Inhabited building distances do not provide protection against breaking glass or injury to personnel from breaking glass. Therefore, greater distances should be used if possible. However, with some types of buildings, it is not practical to either purchase or control the amount of land necessary to eliminate all instances of broken glass and resulting personnel injury. This is particularly true of large buildings such as schools, churches, hospitals, factories, and theaters. For large buildings, because of both their size and construction, there is a greater possibility of both superficial and structural damage.

7-8.1.2. Passenger Railway Distance. Passenger railway distance is the minimum distance permitted between a railroad that carries passengers and an explosive hazard. It represents the distance at which railroad equipment on passenger railways generally is safe from the blast or fragment effects of explosions. Passenger railway distance for mass-detonating explosives are 60% of the inhabited building distance. This policy is based on the following criteria: railcars are comparatively lower than buildings and therefore have a smaller area exposed to blast or fragments; railcars have a greater resistance to concussion than buildings are stationary and subject to constant risk but the presence of a train is temporary. This policy for passenger railways results in calculated PTR distances shown in table 7-7 that are 60% of the inhabited building distances proportional to the frequency of use as defined in paragraph 7-6.2.3.

7-8.1.3. Public Freight Railway Distance. Public railways that do not carry passengers may pass at a minimum distance of 400 feet from PESs unless the PTR distances specified in the ESQD tables are less. However, these railways should be separated by PTR distances from explosive operating buildings.

7-8.1.4. Public Traffic Route Distance. PTR distance is the minimum distance permitted between a PTR and an explosives hazard. PTR distances are based on criteria similar to those applicable to public railways. The degree of safety provided to personnel by the PTR distances is proportional to the frequency of use as defined in paragraph 7-6.2.3. The distance is sufficient to minimize damage to vehicles on the road unless they are hit by fragments or unless the blast wave causes momentary loss of control by the operator. Persons in the open at these distances will not be killed or injured directly by blast or shock, but they may be killed or injured by fragments. Thus, the hazard can be serious when the concentration of persons is high such as outdoor amusement or sports gatherings.

7-8.1.5. Earth-Covered Magazine Distances. Separation distances required from standard earth-covered magazines to inhabited buildings and PTRs are listed for various quantities of HC/D 1.1

explosives in table 7-7. See paragraph 7-6.2.1 for application of "Earth-Covered Magazine" distances of table 7-7 to 7-Bar, 3-Bar, and undefined earth-covered magazines. Specified separation between 7-Bar earth-covered magazines and inhabited buildings and PTRs take into account reductions in blast overpressure attributable to the earth cover of the magazines.

7-8.1.5.1. Intraline Distances. Intraline separation is the distance required between explosive operating buildings or sites within an explosive operating line when at least one contains or is designated to contain explosives. A magazine shall not be less than intraline separation to the nearest operating building based on the quantity of explosives contained in the magazine, regardless of the amount contained in the operating building. When determining intraline and intermagazine distances, use tables 7-10 and 7-11 for HC/D 1.1 material. Permissible exposures at intraline distances are described in paragraphs 7-9.1.1 and 7-9.2.1. The intraline separations shown in table 7-10 approximate those represented by $D=9W^{1/3}$ for barricaded structures and $D=18W^{1/3}$ for unbarricaded structures. Intraline distances provide a high degree of protection against the propagation of an explosion from one building to another. However, if a mass detonation occurs, there may be a loss of life or severe injuries from the partial collapse of buildings or from fragments. Intraline separation may be used to separate operating buildings from other explosives operating buildings, whether or not line operations are involved, providing the ammunition and explosives involved in each operating building present similar hazards and the degree of hazard for the explosives operations does not exceed those normally associated with surveillance, checkout, inspection, minor retrofit, limited assembly and disassembly operations, and packaging and shipping operations. Intraline separation also may be used to separate structures used for nonexplosives operations from explosives operating buildings and storage magazines if these structures are used in support of the explosives operation or area.

NOTE

Separation distance for quantities of explosives not provided in table 7-10 can be interpolated or extrapolated using the formulas cited in the column headings.

7-8.1.5.2. Intraline Distance from Earth-Covered Magazines. Testing has shown some reduction in the blast overpressure from the sides and rear of earth-covered magazines and a slight increase out the front, relative to an unconfined surface-burst. The $D=9W^{1/3}$ (12 psi) barricaded and $D=18W^{1/3}$ (3.5 psi) unbarricaded intraline distances from earth-covered magazines are given according to the factors presented in table 7-11.

7-8.1.5.3. Intermagazine Distances. Intermagazine distances are expected to protect against the propagation of an explosion of HC/D 1.1 material from one magazine to another by sympathetic detonation, but not necessarily against the possibility of propagation from fragments. For this reason, the construction of the magazine, including reinforced concrete walls and roof and earth covering, is designed to prevent propagation of an explosion by fragments. Magazine distances are not expected to protect magazines, except possibly arch-type, earth-covered magazines, from severe structural damage.

a. Mass-Detonating Hazard Materials. Magazine separation distances, depend on the type of magazine and the type of ammunition and explosives stored in the magazine. Tables 7-12, 7-13 and 7-14 specify minimum magazine separating distances for reinforced concrete, earth-covered, barricaded, arch-type magazines, special type magazines, and above-ground, or surface, magazines, and multiple magazines that store HC/D 1.1 explosive items. For distances applicable to caverns or excavated chambers below the natural ground surface, refer to paragraph 7-14. Siting criteria for open storage sites (barricaded modules) is provided in paragraph 8-2.4.4.

b. Application of Intermagazine Distances. When applying the intermagazine distances given in tables 7-12, 7-13 and 7-14 consideration shall be given to the construction of the magazines and to their orientation relative to each other. When earth-covered magazines that contain HC/D 1.1 ammunition are sited so that any one is in the forward sector of another, the two shall be separated by distances greater than the minimum permitted when they are oriented side-to-side. The forward sector, or "front," for earth-covered magazines is that area 60 degrees either side of the magazine centerline with the vertex of the angle placed so that the sides of the angle pass through the intersection of the headwall and sidewalls. The greater distances are required primarily to protect door and headwall structures against blast from a PES forward of the exposed magazine and, to a lesser extent due to the directional effects from the source. The rear sector is that area 45 degrees either side of the magazine centerline (90° combined angle) with the vertex of the angle placed so that the sides of the angle pass through the intersection of the rear and side walls. See figure 7-2 for a diagram depicting front, side, and rear sectors. When a blast wave is reflected from a surface at other than grazing incidence (side on orientation), the overpressure may be increased substantially over the free-field value. High reflected pressure and impulse can damage doors and headwalls, and propel the debris into the magazine so that an explosion is communicated by impact of such debris upon the contents. Examples of siting rules to magazine orientation (illustrated in figure 7-2) follows:

(1) Figure 7-2 (a) and (b): If the headwalls of magazines X and Y are outside the 120-degree sector, and therefore more than 60 degrees to either side of the centerline, they may be separated by side to side distances shown in columns 3 and 4, table 7-14 calculated using the larger quantity of HC/D 1.1 stored in either magazine.

(2) figure 7-2 (c): If the headwall of X is outside the 120-degree sector of Y, but the headwall of Y is inside the 120-degree sector of X, the separation distance between these two igloos is determined by side-to-front distances for X and front-to-side for Y as shown in table 7-14 columns 5, 7, and 9 based on the largest distance for either magazine.

(3) figure 7-2 (d): If headwalls of X and Y are within the 120-degree sector of each other and neither magazine has a barricade that meets the requirement of paragraph 8-2.4.4, front-to-front unbarricaded distances will be used. Magazine Z will be treated as a barricaded ES, while magazines X and Y are unbarricaded ESs.

(4) figure 7-2 (e) and (f): Magazine X would be sited as a side-to-front (unbarricaded) ES. Magazine Y would be sited as a front (unbarricaded)-to-side ES.

c. Relationship Between Earth-Covered Magazines and Intraline Distance Structures. When considering relationships between earth-covered magazines and either aboveground magazines or facilities requiring intraline distances containing HC/D 1.1 ammunition or explosives, the following criteria shall apply for using barricaded or unbarricaded distances.

(1) Both earth-covered and aboveground magazines with a barricade to the front are considered barricaded and create a reduction in siting distances when acting as a PES or ES.

(2) For siting applications involving fragment mitigation, see paragraph 8-2.5.

(3) The earth-covers on the sides and rear of an earth-covered magazine may be treated as barricades for siting purposes.

(4) Aboveground magazines or facilities that require intraline distances, and are outside of the 120-degree sector from the front of an earth-covered magazine shall be provided with barricaded distances whether or not a separate intervening barricade is present. See figure 7-2 (h).

d. Quantities of NEW. Other factors limiting earth-covered magazine storage are:

(1) Quantities above 500,000 pounds NEW in one storage location are not authorized except for energetic liquids.

(2) The distance given for 100 pounds NEW constitutes the minimum magazine spacing permitted.

e. Examples Other Than HC/D 1.1 Explosives. The examples given in paragraphs 7-8.1.5.3.b(1) through 7-8.1.5.3.b(3) apply only to the storage of HC/D 1.1 ammunition and explosives. Existing earth-covered magazines, regardless of orientation, that meet the construction and barricading requirements of chapters 7 and 8, and are cited for 100 pounds NEW HC/D 1.1 material, may be used to their physical capacity for the storage of HC/D 1.2, 1.3, and 1.4 ammunition and explosives providing the appropriate inhabited building and intraline separation distances are met.

NOTE

Separation distance requirements for quantities of explosives not provided in table 7-14 can be interpolated or extrapolated using the formulas cited in the column headings.

7-8.1.6. High Performance Magazine. The primary objective of an HPM is to reduce the land encumbered by explosives safety quantity-distances by limiting the MCE to a fraction of the total NEW stored in the HPM. The MCE is determined by adding the NEW in an individual cell to the NEW at the loading dock. Separation walls also provide protection against fire propagation between storage areas within the HPM. The HPM may be sited at the intermagazine distances as shown in tables 7-11 and 7-12. Figure 7-2 (g) defines the front of an HPM for intermagazine siting. Damage to assets depends on the donor NEW and the scaled separation distance K. Intermagazine distance provides nearly complete asset protection between HPMs (MCE=60,000 pounds maximum). However, damage may occur to ammunition in an HPM to about K9 from a donor NEW>350,000 pounds.

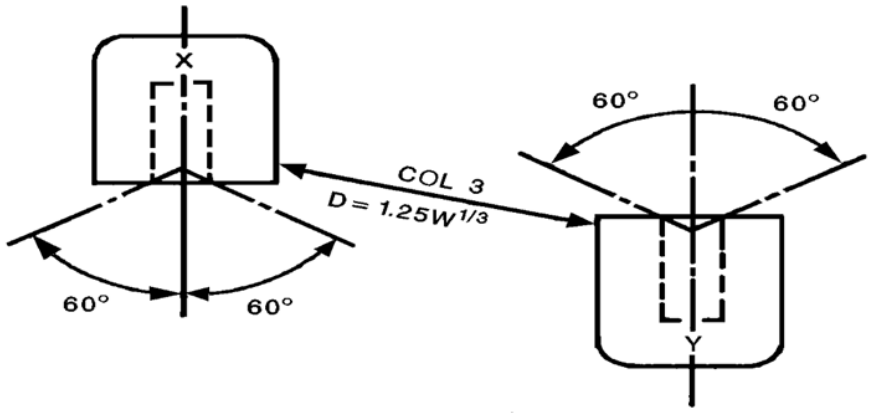

(a) Headwalls outside 120° Sector

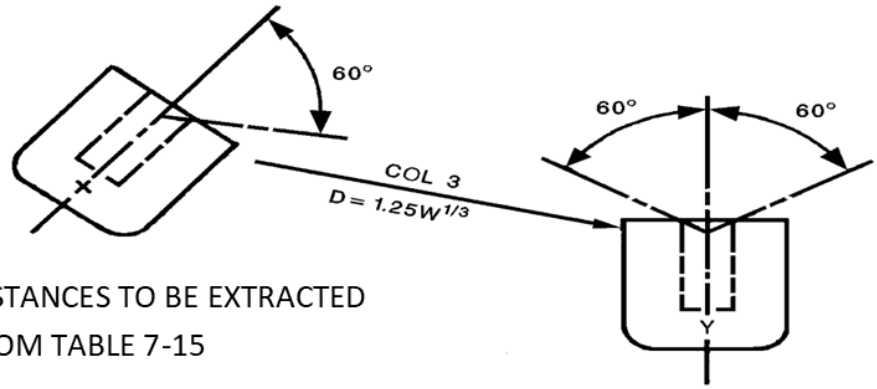

NOTE: DISTANCES TO BE EXTRACTED FROM TABLE 7-15

(b) Headwalls Outside 120° Sector

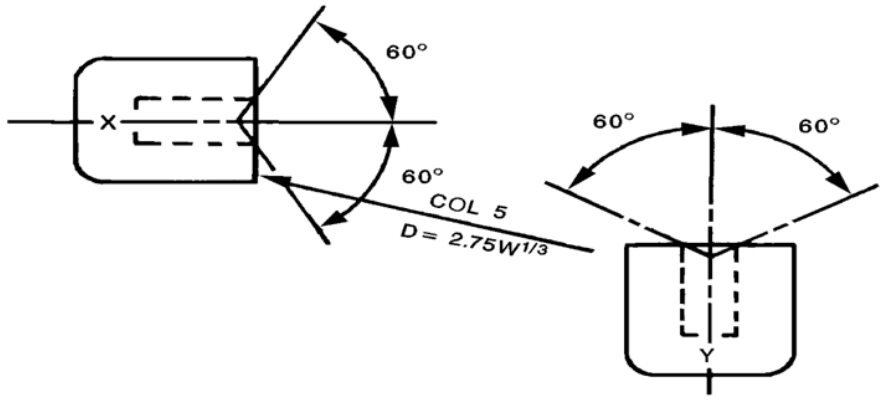

(c) One Headwall Inside 120° Sector

Figure 7-2. Quantity-Distance Requirements Based on Magazine Siting (Sheet 1 of 3)

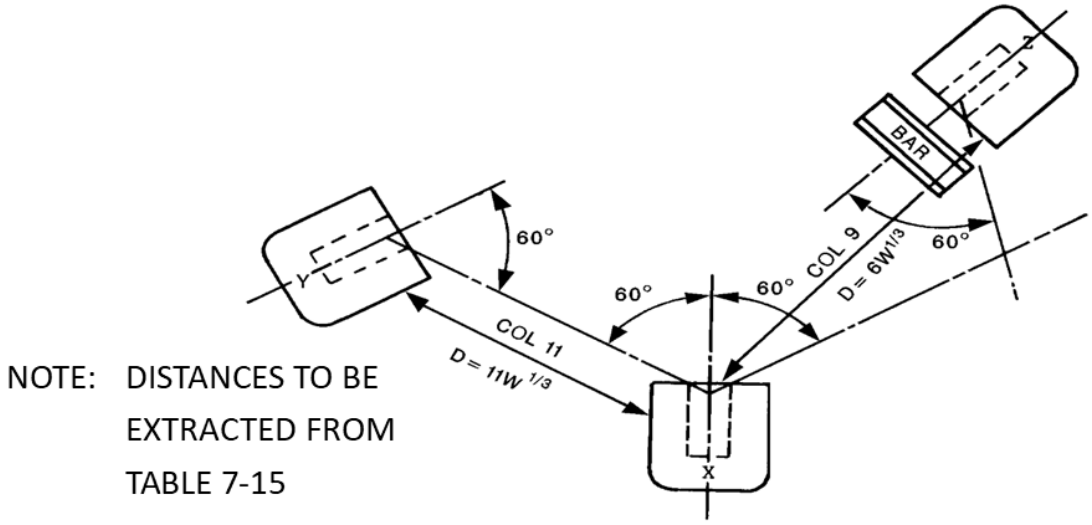

(d) Both Headwalls Inside 120° Sector

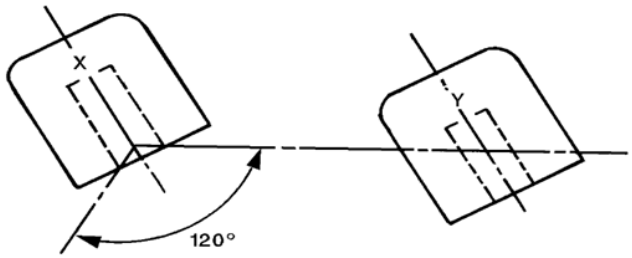

(e) Canted Magazines

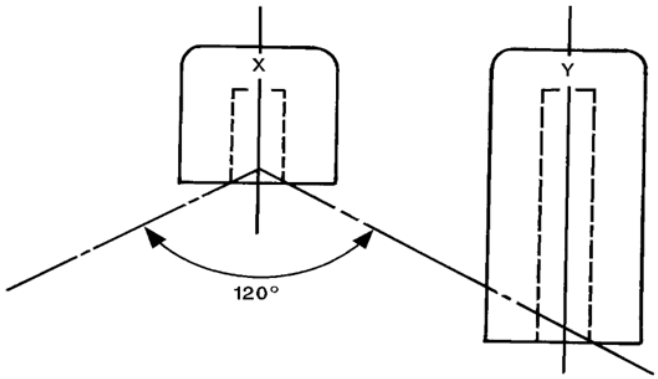

(f) Magazines of Significantly Different Lengths

Figure 7-2. Quantity-Distance Requirements Based on Magazine Siting (Sheet 2 of 3)

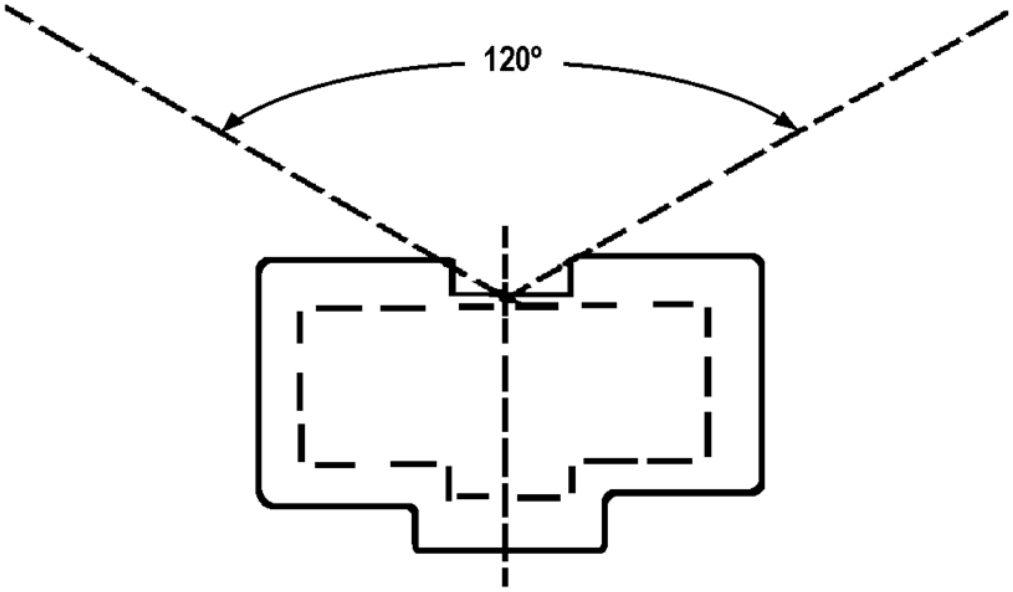

(g) Front of High Performance Magazine

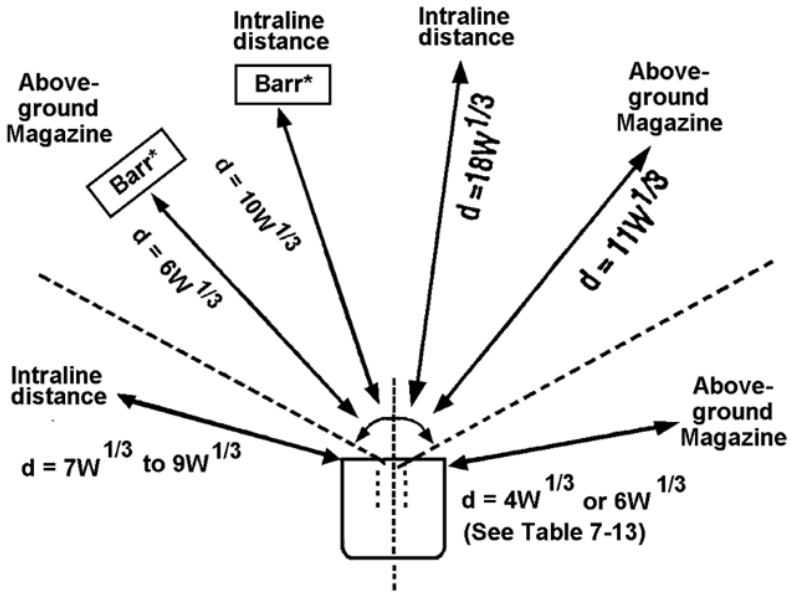

(h) Barricaded & Unbarricaded Distances

*Barr—Barricade

Figure 7-2. Quantity-Distance Requirements Based on Magazine Siting (Sheet 3 of 3)

7-8.1.6.1. HPM Storage Principles. Because of its construction, each storage cell of the HPM is treated as a separate magazine for the purposes of meeting DoW storage and compatibility requirements. For the purpose of storage within an HPM, all HC/D 1.1 and 1.2 ammunition is grouped into five HPM Sensitivity Groups (SG) as listed in the Joint Hazard Classification System (JHCS). Within a cell, all current mixing and storage compatibility regulations, as defined in chapter 3, apply.

7-8.1.6.2. High Performance Magazine Sensitivity Groups. The five SGs, in relative order from least sensitive to most sensitive, are:

a. SG 2 - non-robust military munitions. See appendix A.

b. SG 1 - robust military munitions. See appendix A.

c. SG 3 - fragmenting military munitions. See appendix A.

d. SG 4 - cluster bombs/dispenser unit military munitions. See appendix A.

e. SG 5 - Sympathetic detonation sensitive military munitions. See appendix A.

7-8.1.6.3. The allowable explosives weight in cells adjacent to cells containing SG 1, 2 and 3 ammunition: 30,000 pounds in cell; 60,000 pounds in loading dock. The allowable explosives weight in cells adjacent to cells containing SG 4 ammunition: 15,000 pounds in cell (side-to-side); 60,000 pounds in loading dock. See HPM Definitive Drawings NFESC 99220001-99220012.

7-8.1.6.4. When SGs are mixed, the most sensitive group controls the allowable explosives weight in an adjacent cell. When HC/D 1.3, 1.4, and 1.6 are stored with HC/D 1.1 or 1.2, the SGs of the HC/D 1.1 and 1.2 control the storage requirements for explosives safety.

7-8.1.6.5. For the purpose of assigning SGs, an item should be placed into Group 1 when any two of the following criteria are met:

a. Explosive weight/empty case weight<1.

b. Case thickness>0.4 inches.

c. Case thickness/$NEW^{1/3}$>0.05 inches/$pound^{1/3}$

Examples of robust munitions include 20 mm, 25 mm, and 30 mm cartridges, General Purpose (GP) bombs, artillery projectiles, and penetrator warheads.

7-8.1.6.6. For the purpose of assigning SGs, non-robust munitions (SG 2) are items that do not meet the criteria shown above for SG 1, and are not candidates for SG 3, SG 4 or SG 5. Examples of such munitions include torpedoes and underwater mines.

7-8.1.6.7. Group 3 items have cases designed for fragmentation - items with pre-formed fragment warhead, scored cases, continuous rod warheads, etc. These items are usually air-to-air missile warheads.

7-8.1.6.8. Items are assigned to Group 5 because of their sensitivity. Either it is known that the item can be very sensitive or the sensitivity of the item has not been established.

7-8.1.6.9. Item-specific testing and/or analyses can and should be used to change the HPM sensitivity group of an item.

7-8.1.6.10. Intraline Distance from High Performance Magazines. Test results show that the earth-bermed HPM attenuates pressures relative to the unconfined surface burst configuration. The attenuation is similar to that shown for an earth-covered magazine in paragraph 7-8.1.5.2. The values shown in table 7-11 for the front exposure also apply to the front of the HPM. The values shown in table 7-11 for the side exposure also apply to the side and rear exposures of the HPM. The definition of "front" for earth-covered magazines also applies to the HPM; see paragraph 7-8.1.5.3.b.

7-8.2. CLASS/DIVISION 1.2 HAZARDS.

7-8.2.1. General. The HC/D 1.2 hazard classification is given to items configured for storage and transportation that do not mass detonate when a single item or package in a stack is initiated. Explosions involving the items result in their burning and exploding progressively with no more than a few at a time reacting. These reactions will project fragments, firebrands, and unexploded items from the explosion site. Blast effects are limited to the immediate vicinity and are not the primary hazard.

7-8.2.1.1. Small quantities of HC/D 1.2.1 (<450 pounds NEW), in certain packaging configurations, will react in a manner more typical of a HC/D 1.1 event. When located in structures that stop primary fragments, but which generate a secondary debris hazard (for example, certain ECM and hardened structures), the structural damage and debris hazards produced from these events again are more characteristic of a HC/D 1.1 explosion, rather than the progressive nature of a HC/D 1.2.1 event, as described above. When the NEW and the MCE of the packaged HC/D 1.2.1 items fall within the ranges specified in equation ($NEW \leq MCE \leq 450LBS$), the HC/D 1.2.1 will be treated as HC/D 1.1 and the criteria of paragraph 7-6.2.1 as applicable, will be used. If they fall outside the ranges of the equation, then the criteria of table 7-15 will be applied.

7-8.2.2. NEWQD for HC/D 1.2 Subdivisions. The effects produced by the functioning of HC/D 1.2 items vary with the size and weight of the item; see paragraph 7-4.2.2. HC/D 1.2 ammunition is separated into two sub-divisions in order to account for the differences in magnitude of these effects for purposes of setting ESQD criteria. The more hazardous items are referred to as HC/D 1.2.1 items and have an NEWQD greater than 1.60 pounds. The less hazardous items, referred to hereafter as HC/D 1.2.2, have an NEWQD less than or equal to 1.60 pounds. These two HC/D 1.2 sub-divisions are shown below with their definitions:

HC/D 1.2.1:	NEWQD > 1.60 pounds
HC/D 1.2.2:	NEWQD < 1.60 pounds

The value of 1.6 pounds is based on a break point in the database supporting quantity distance relationships and the NEWQD of the rounds tested. If comprehensive data is available for a particular item, then the item may be placed in that category of HC/D 1.2 supported by the data and allocated the relevant quantity distance.

7-8.2.3. Maximum Credible Event (MCE). The MCE is the NEWQD for an item multiplied by the number of items in three unpalletized, outer shipping packages, unless a different MCE is demonstrated by testing or analogy. The MCE for a specific item is shown in NAVSEA SW020-AC-SAF-010.

7-8.2.3.1. Tables 7-15 through 7-18 provide the appropriate inhabited building distances, PTR distances, and intraline distances for HC/D 1.2.1 and HC/D 1.2.2 ammunition, respectively. When HC/D 1.2.1 items are stored in structures which may contribute to the debris hazard, the inhabited building distance is determined by using the larger of the following two distances:

a. That distance given in table 7-16 for the appropriate Explosive Weight (number of items x NEWQD), or

b. That distance given in table 7-17 for the appropriate MCE.

Inhabited building, PTR and intraline distances for HC/D 1.2.1, 1.2.2 and 1.2.3 stored in earth covered magazines are determined using table 7-15.

7-8.2.4. Intermagazine Distance. The intermagazine distance is dependent upon the types of structures acting as both the PES and the ES. Table 7-15 provides a matrix of all the appropriate separations for the various combinations of ES and PES.

7-8.2.5. Public Traffic Route Distance. PTR distances given in table 7-16 through table 7-18 give consideration to the transient nature of the exposure in the same manner as for HC/D 1.1. PTR distance is computed as 60% of the inhabited building distance for items in this hazard division, with a minimum distance equal to the intermagazine distance given in table 7-15 for light structures, open stacks, trucks, trailers, or railcars. Such structures are designated as AGS(L) in table 7-15.

7-8.2.6. Intraline Distance. The intraline distance given in tables 7-15 through 7-16 take into account the progressive nature of explosions involving these items (normally resulting from fire spread), up to the magnitude of the MCE, and the ability to evacuate personnel from endangered areas before the progression involves large numbers of items. Exposed structures may be extensively damaged by projections and delayed propagation of explosions may occur due to the ignition of combustibles by projections. Intraline distance is computed as 36% of the inhabited building distance for items of this HC/D, with a minimum distance equal to the intermagazine distances given in table 7-15.

7-8.2.7. Unit Risk Class/Division 1.2. A special storage sub-division, HC/D 1.2.3, has been established for ammunition that satisfies either of the following sets of criteria:

a. Ammunition that satisfies the criteria for HC/D 1.6 with the exception of containing a non-EIS device, or

b. Ammunition that does not exhibit any sympathetic detonation response in the stack test [UN Tests 6(b) or any reaction more severe than burning in the external fire test [UN Test 6(c), bullet impact test [UN Test 7(j)], and the slow cook-off test [UN Test 7(h)].

The inhabited building distance for Unit Risk HC/D 1.2 (HC/D 1.2.3) is determined using table 7-20, “Quantity-Distance Requirements for HC/D 1.3 Items” for the NEWQD of the HC/D 1.2.3 items multiplied by the number of items present, but with a minimum inhabited building distance determined as follows: if the items are in a structure that can interrupt primary fragments and can contribute debris, the minimum inhabited building distance is the hazardous debris distance given in table 7-17 for the MCE of the HC/D 1.2.3 item. If the items are in the open or in a light structure that will not interrupt primary fragments, the minimum inhabited building distance is the hazardous primary fragment distance based on the HC/D 1.1 hazardous fragment areal number density criteria applied to the MCE of the HC/D 1.2.3 items. The hazardous fragment distance applicable to items in the open is specified in hundreds of feet in parentheses as “(xx) 1.2.3“. PTR for HC/D 1.2.3 is equal to 60% of inhabited

building distance. Intraline distance is computed as 36% of inhabited building distance, with a minimum distance equal to the intermagazine distance. Intermagazine distance is given in table 7-15. For any specific quantity or distance determination, as an alternative to the preceding HC/D 1.2.3 QD criteria, when an increase in the allowable quantity or a reduction in the required distance will result, items hazard-classified as HC/D 1.2.3 may be treated as follows: If the HC/D 1.2.3 items MCE is greater than 1.6 pounds, consider the items as HC/D 1.2.1 (use the total NEWQD present, with the MCE of the HC/D 1.2.3 items). If the HC/D 1.2.3 items MCE is equal to or less than 1.6 pounds, consider the items as HC/D 1.2.2, based on the total NEWQD present. Typically, the MCE would not exceed 450 pounds.

7-8.2.8. Storage of Class/Division 1.2 Sub-Divisions. Storage of HC/D 1.2 sub-divisions shall be as follows:

7-8.2.8.1. Mixed storage of sub-divisions of HC/D 1.2 (HC/D 1.2.1 and HC/D 1.2.2) ammunition shall take into consideration each sub-division separately. The greater of the two distances shall be applied. The general mixing rules for HC/D 1.2 ammunition are given in table 7-19.

7-8.2.8.2. For storage of mixed Unit Risk HC/D 1.2 (HC/D 1.2.3) ammunition, multiply the NEWQD for the HC/D 1.2.3 items by the corresponding number of HC/D 1.2.3 items and use table 7-20 with a minimum fragment distance based on the largest minimum fragment distance for the HC/D 1.2.3 ammunition in storage. When HC/D 1.2.3 ammunition is located with any other HC/D 1.2 sub-division, use the distances given in table 7-15. When HC/D 1.2.3 ammunition is located with any other HC/D ammunition, the HC/D 1.2.3 ammunition is considered HC/D 1.2 (HC/D 1.2.1 or HC/D 1.2.2, according to the MCE) for ESQD purposes. The mixing rules provided in paragraph 7-8.2.8.1, above, then apply to the combination of the hazard divisions.

7-8.2.8.3. Operations and storage involving limited quantities of HC/D 1.2.2 items can be authorized by NOSSA without application of ESQD for reasons of operational necessity, at facilities such as hangars, troop buildings, piers, and manufacturing or operating buildings.

7-8.3. CLASS/DIVISION 1.3 HAZARDS.

7-8.3.1. General. HC/D 1.3 includes items that burn vigorously and are almost impossible to extinguish in storage situations. Explosions normally will be limited to the rupturing of containers. Propagating shock waves or blast overpressures are unlikely beyond the magazine distances specified in table 7-20. However, a fire hazard may result from burning container materials, propellant or flaming debris projected by the explosion. Toxic effects, such as burning pyrotechnic items, normally will not exist beyond the inhabited building distances specified for this division.

7-8.3.2. ESQD Requirements. When determining inhabited building, PTR, intraline and intermagazine distances for HC/D 1.3 items, use table 7-20. Table 7-21 provides separation distances for bulk smokeless powder and ballistite not in containers.

7-8.4. CLASS/DIVISION 1.4 HAZARDS.

7-8.4.1. General. Items in this division present a fire hazard with minimal blast, fragmentation, or toxic hazard. Devices that contain explosives are not considered Class 1 if an inadvertent or accidental ignition during storage or transport will not result in fire, smoke, heat, loud noise, or visible damage to the outer packaging. Items hazard classified as HC/D 1.4S may be stored (including associated handling) without regard to the ESQD criteria of table 7-22, or the siting requirements of paragraph 8-1.2. For storage of limited quantities of HC/D 1.4 items, see note 8 of table 7-22.

7-8.4.2. ESQD Requirements. When determining inhabited building, PTR, intraline and intermagazine distances, use table 7-22.

7-8.5. CLASS/DIVISION 1.5 HAZARDS. This division is comprised of substances which have a mass explosion hazard but are so insensitive that there is very little probability of initiation or of transition from burning to detonation under normal conditions of transport or storage.

7-8.6. CLASS/DIVISION 1.6 HAZARDS.

7-8.6.1. General. HC/D 1.6 ammunition contains EIS and has demonstrated through test results that the mass and confinement effects of the ammunition case are negligible on the probability of initiation or transition from burning to detonation of the EIS in transportation or storage.

7-8.6.2. ESQD Requirements. Inhabited building, PTR, intraline and intermagazine list are provided in table 7-23.

7-8.7. CLASS/DIVISION 6.0 HAZARDS.

7-8.7.1. General. HC/D 6.1 includes items that contain only toxic chemicals. Items containing both explosives and toxic chemicals may be included in HC/D 1.1 through 1.4, based on testing in accordance with NAVSEAINST 8020.8 (series).

7-8.7.2. Hazard Zones. Hazard zones for toxic chemicals are determined by their relative toxicity, the amount released into the atmosphere, the rate at which they are released due to evaporation, pressure, or explosive dispersal, terrain features, and meteorological conditions. Hazard zone calculations are based on MCE, using Methodology for Chemical Hazard Prediction, DoD Explosives Safety Board Technical Paper No. 10.

7-9. PERMISSIBLE EXPOSURE TO AIRBLAST OVERPRESSURE.

Tables specifying the required ESQD in feet for varying quantities of HC/D 1.1 NEW appear at the end of this chapter. The application of these required separation distances are described in the following paragraphs.

7-9.1. EXPOSURE TO 12 PSI AT $D=9W^{1/3}$ (BARRICADED INTRALINE DISTANCE).

7-9.1.1. Separation Distance Requirements. Distance requirements to limit intraline blast overpressure exposure to 12 psi (82.7 kPa) or 0.7 bars when barricading is present are determined by $D=9W^{1/3}$ ($3.6Q^{1/3}$). These distances for varying quantities of NEW are listed in table 7-10 column 2. These intraline separation distances are acceptable for the following when a barricade is present:

a. Buildings that house successive steps of a single production, renovation, or maintenance operation.

b. Security alert force buildings as described in paragraphs 7-13.3 and 7-13.4.

c. Facilities at a tactical missile site where greater distances from the PES cannot be provided because of technical reasons.

d. Breakrooms and change houses if they are part of an operating line and are used exclusively by personnel employed in operations of the line.

e. Temporary holding areas for trucks or railcars containing explosives that service production or maintenance facilities.

f. Field operations in magazine areas when performing minor maintenance, preservation, packaging, or surveillance inspection.

g. Dunnage preparation and similar support structures that house nonexplosives operations if they are used only by personnel employed at the PES.

h. Magazines that are part of operating lines. Distances in this case are based on the quantity/type of ammunition or explosives in the magazine(s), not in the operating building. Specific distances for earth-covered magazines are provided in table 7-11, under the K9 Application columns.

i. Hazardous sites listed in paragraph 7-9.2.1 providing blast suppression, structural hardening, or other construction used to provide comparable protection for personnel and equipment.

j. Exceptions include:

(1) Unmanned auxiliary utility facilities (e.g., transformer stations, water treatment and pollution abatement facilities) that serve, but are not an integral function in the PES and, if lost, would not create an immediate secondary hazard. Such unmanned facilities need not be barricaded.

(2) Unmanned auxiliary power generation or conversion facilities that exclusively supply power to an AE storage area or security fence lighting may be located at fire protection distance (50 feet for non-combustible structures, 100 feet for combustible structures) from AE facilities.

7-9.2. EXPOSURE TO 3.5 PSI AT $D=18W^{1/3}$ (UNBARRICADED INTRALINE DISTANCES).

7-9.2.1. Separation Distance Requirements. Distance requirements to limit intraline blast overpressure exposure to 3.5 psi or 0.24 bars when barricading is not present are determined by $D=18W^{1/3}(7.2Q^{1/3})$. These distances for varying quantities of NEW are listed in table 7-10 column 3. These intraline separation distances are acceptable for the following:

a. Workers engaged in construction in the vicinity of ammunition and explosives production areas, in waterfront areas where ammunition is being handled and ESQD requirements otherwise apply, or in areas used for loading aircraft with explosives. Temporary construction trailers used only by workers on site. Policy for authorization of temporary construction operations and construction trailers is discussed in paragraphs 7-7.4.3 and 8-1.2.

b. Surveillance, maintenance, and inspection buildings, and labor intensive operations closely related to the PES.

c. Occupied buildings used for comfort, safety, and convenience exclusively in support of several PESs, such as lunchrooms, break rooms, change houses, motor pools, field/area offices, auxiliary fire stations, transportation dispatch points, and shipping and receiving buildings. Magazine area loading docks are not included. See paragraph 7-13.1 for auxiliary facilities that serve only one PES.

d. Operating lines that are parallel to each other, whether or not they are barricaded, if ammunition and explosives involved in each operating line present similar hazards. When it is critical that one or more of the operating lines survive, each line may require the level of protection for an inhabited building.

e. Operations and training functions that are exclusively manned or attended by personnel of the unit that are operating the PES. This includes day rooms, squadron operation offices, and similar functions for units such as individual missile firing batteries, aircraft squadrons, or ammunition supply companies. Training functions permitted include classroom or field training for personnel who may be required to engage in explosives work at the PES. Maneuver areas, proving ground tracks, and similar facilities for armored vehicles also may be exposed to 3.5 psi or 0.24 bar because the vehicle should provide adequate protection to the operators from fragments and debris.

f. Maintenance of military vehicles and equipment when the PES contains basic load or ready storage is located in OCONUS areas and is limited to 4,000 Kilograms (kg) Net Explosive Quantity (NEQ) or less NEW at each area, and when the maintenance work is performed exclusively by military personnel of the unit for which the basic load of ammunition is being stored.

g. Auxiliary power and utilities functions including auxiliary power plants, compressor stations, electric power transformers, tool and consumable supplies storage and issue areas, and handling equipment service, battery charging and minor repair areas. When these facilities serve an entire activity or base complex, or when loss of the facility would cause an immediate loss of a vital function, the exposure level shall not exceed 1.2 psi or 0.08 bar. Cold-iron ship support facilities (i.e., supply and mechanical support) at waterfront areas are excluded from QD separation requirements when they are not continuously manned and when the PES is a ship or waterfront explosive handling area.

h. Separate groups of explosives-loaded, combat configured aircraft or aircraft and a preload or “quick turn” site that serves to arm the aircraft. The use of intervening barricades is required to further reduce the spread of explosion and fragment damage, and to eliminate the need to calculate a total NEW for the location. Loading ammunition and explosives aboard aircraft can be accomplished within each group of aircraft without additional protection.

i. Between cargo ammunition ships at different piers, see paragraph 7-10.1.

j. Between unbarricaded service magazines and explosive operating facilities. Distance requirements are based on quantity and type of ammunition or explosives in the magazine(s), not on the quantity or type in the operating building. Magazines not meeting the definition of a service magazine must meet applicable intermagazine distance from the operating building. Specific K factors for magazines are provided in tables 7-12 and 7-13.

k. Container stuffing and unstuffing operations performed routinely in the support of the PES. This applies only to main support functions for shiploading or manufacturing operations. When the activity involves shiploading and unloading, and the ES is an ammunition ship, the quantity at the container site will govern. Container stuffing and unstuffing in a magazine area is permitted at intermagazine distances.

l. Between explosives-loaded and combat aircraft and those non-explosives facilities that directly support the servicing and launching of armed aircraft. Examples include activities and their operating facilities for handling ammunition and explosives on the flight line, for preparing and servicing armed aircraft, and for personnel who fly combat aircraft. Facilities associated directly with flightline combat aircraft may contain field offices, break rooms, unit training rooms, and equipment and supply rooms, as well as petroleum, oils and lubricants (POL) hydrant facilities and civil engineer (CE) fire protection stations. Specifically excluded are morale, welfare and recreation (MWR) facilities, base civil engineering headquarters, and industrial facilities, including central base supply.

7-9.3. EXPOSURE TO 2.3 PSI AT $D=24W^{1/3}$.

7-9.3.1. Separation Distance Requirements. Distance requirements to limit blast overpressure exposure to 2.3 psi or 0.16 bars for PTRs with less than 100,000 pounds NEW are determined by $D=24W^{1/3}$ ($9.6Q^{1/3}$). The separation distances for personnel exposed to remotely controlled operations for any NEW is determined by $D=24W^{1/3}$ feet. Some instances may require certain specialized testing of weapons. Power application non-launch activities and other weapon system tests (e.g., weapons functionality test, electrical continuity test) can be performed on some weapons by proximity testing when the Weapon System Explosives Safety Review Board (WSESRB) concurs with the operation, thereby eliminating the need for remote control of the operation. See NAVSEAINST 8020.6 (series) for information pertaining to WSESRB processes.

7-9.4. EXPOSURE TO BETWEEN 2.3 AND 1.7 PSI AT $D=24W^{1/3}$ TO $D=30W^{1/3}$.

7-9.4.1. Separation Distance Requirements. Distance requirements to limit blast overpressure to between 2.3 and 1.7 psi or between 0.16 and 0.12 bars for PTRs when between 100,000 and 250,000 pounds (45,500 and 113,000 kg) NEW is present at the PES is determined by $D=24W^{1/3}$ to $D=30W^{1/3}$ ($9.6Q^{1/3}$ to $12Q^{1/3}$). These distances for varying quantities of NEW are listed in table 7-7 column 9. Unless otherwise indicated, separation distances are acceptable for the following:

a. Public traffic routes with medium and low traffic densities as described in paragraphs 7-6.2.3.2 and 7-6.2.3.3.

b. Private vehicle parking in administrative areas. Minimum fragment distance should be applied. See paragraph 7-6.

c. Open air recreation facilities, such as ball diamonds or volleyball courts used for morale and health purposes at DON activities, providing structures are not involved. When these recreation facilities are used solely for off-duty recreation by military personnel at their posts of duty, neither blast nor fragment ESQD requirements apply. This total relaxation of ESQD requirements applies only when the PES and the ES are closely related. Examples of closely related PES and ES are a bomber on alert and the recreation area for its crew, a Navy tender and the recreation area for its crew and the crew of the tended ship, a security alert force and the explosives facility for which they are responsible, and crews for quick reaction force armored vehicles and the explosives loaded vehicles that these crews man during military action. Relaxation of ESQD requirements is not intended to encourage the building of elaborate installations to replace properly located recreation facilities or to encourage the rearrangement of essentially unrelated military functions.

d. Training areas for unprotected military personnel. These areas include observation points and instruction areas for small arms and artillery firing ranges and similar fixed facilities (including small classrooms) designed for occasional use coincident with use by groups or classes using the range. Separation or other protection from permanent magazines and ammunition supply points is required. However, in order to achieve realism in training, these specifications do not apply to ammunition and explosives needed for particular exercises or for explosives needed for on the job training of explosives workers.

e. Training scenarios that do not require site approval submission, include the following:

(1) Security exercises conducted to maintain proficiency in defending against terrorist or natural disasters that must be conducted within the ESQD arcs of the explosive facilities that the forces train to defend. These facilities may include ammunition loading piers, operating buildings, or storage areas.

Training ammunition is limited to HC/D 1.2.2 (simulator charges), HC/D 1.3 and 1.4 material. When the training areas extend beyond existing inhabited building distance (IBD) arcs, a 75 foot exclusion zone must be maintained to personnel not associated with the exercise. Written procedures must be established to control the exercise and protect personnel not associated with the exercise. Each exercise requires coordination with all applicable explosives safety officers, tenant commands and written authorization by the host activity commanding officer. Ammunition may be staged on the vehicles that provide delivery and distribution through termination of the exercises, provided the 75 foot exclusion zone is maintained and arms, ammunition, and explosives (AA&E) physical security requirements of OPNAVINST 5530.13 (series) are met.

(2) Non-lethal training areas established beyond existing ESQD arcs. These areas provide scheduled land/maritime warfare and close quarter training opportunities within areas defined on base maps. Training ammunition is limited to HC/D 1.2.2 (simulator charges), HC/D 1.3 and 1.4 material. A 75 foot exclusion zone must be maintained to personnel not associated with the training. Written procedures must be established to control training parameters. Each training exercise requires coordination with all applicable explosives safety officers and tenant commands and approval by the host activity explosives safety officer. When the training area is integral to existing facilities and used on a non-concurrent basis, each exercise requires written authorization by the host activity commanding officer. Ammunition may be staged on the vehicles that provide delivery and distribution through termination of exercises, provided the 75 foot exclusion zone is maintained to personnel not associated with the training, and AA&E physical security requirements of OPNAVINST 5530.13 (series) are met. When the training ammunition involves non-DoW material, other than HC/D 1.4S, site approval request must be submitted to NOSSA to verify that applicable exclusion zones are applied.

(3) Material potentially presenting an explosive hazard (MPPEH) must be addressed as follows:

(a) The areas where military munitions were used must be visually surveyed for the presence of MPPEH and a clearance performed at the end of the exercise/training for short term (less than one month) activities and periodically (not less than once every six months) for long term activities. Only personnel authorized as described in paragraph 13-15.11 and working under approved written procedures may move or otherwise manage MPPEH.

(b) Collection points for MPPEH recovered during clearance operations must be located a minimum of 75 feet from the boundary of the exercise/training area. MPPEH collection points meeting this criteria are not required to be sited.

(c) MPPEH collected at the exercise/training area must be either certified as material documented as safe (MDAS) or material documented as an explosive hazard (MDEH) as outlined in paragraph 13-15 before it leaves the exercise/training area. If the criteria specified in paragraph 13-15.3.12 are met, MPPEH may be transferred within an installation.

⚠ WARNING

Request EOD emergency support for any item suspected to be UXO.

NOTE

Training conducted on USMC operational training ranges will follow policy contained in MCO 3570.1 (series). Any questions should be referred to the Marine Corps Range Safety Proponent at Training and Education Command, Range and Training Area Management.

f. Aircraft passenger loading and unloading areas that do not contain any structures.

g. Inert storage located in the open (no structures involved) when not directly related to the explosives mission.

7-9.5. EXPOSURE TO 1.7 PSI AT $D=30W^{1/3}$

7-9.5.1. Separation Distance Requirements. Distance requirements to limit blast overpressure exposure to 1.7 psi (11.7 kPa) or 0.12 bars for PTRs when more than 250,000 pounds (113,000 kg) NEW is present at the PES are determined by $D=30W^{1/3}$ ($12Q^{1/3}$). These distances for varying quantities of NEW are listed in table 7-7 column 9. Unless otherwise indicated, they are acceptable for combat aircraft parking areas exposed to ammunition and explosives storage and operating facilities; see paragraph 7-11.1.2.

7-9.6. EXPOSURE TO BETWEEN 1.2 AND 0.9 PSI AT $D=40W^{1/3}$ TO $D=50W^{1/3}$.

7-9.6.1. Separation Distance Requirements. Distance requirements to limit blast overpressure exposure to between 1.2 and 0.9 psi or between 0.08 and 0.06 bars for inhabited buildings are determined by $D=40W^{1/3}$ to $D=50W^{1/3}$ ($16Q^{1/3}$ to $20Q^{1/3}$). These distances for varying quantities of NEW are listed in table 7-7 column 5. Unless otherwise indicated, these inhabited building separation distances are acceptable for the following:

a. Inhabited buildings, as well as administrative and housing areas.

b. Installation boundaries, unless the area outside the boundary naturally prohibits access, is government land that is not open to the public, or access is controlled by other means. Procedures must be established to monitor the area for any change in status.

c. Athletic fields and other recreation areas when structures are present.

d. Flight line passenger service functions.

e. Main power houses that provide vital utilities to a major portion of an activity.

f. Shops that because of their vital or strategic importance or the intrinsic high value of their contents, should not be placed at risk.

g. Functions that, if momentarily out of action, would cause an immediate secondary hazard because of their failure.

h. PTRs with high traffic density as described in paragraph 7-6.2.3.1.

i. Inert storage located in a structure, when not directly related to the explosives mission.

7-10. QD DETERMINATIONS AT PIER, WHARF, AND ANCHORAGE FACILITIES.

The following ESQD standards apply to the separation of ships, piers, wharves, associated explosives handling facilities, inhabited buildings, PTRs, and other adjacent facilities at DON activities. They also apply to piers and wharves and associated facilities where explosives or ammunition may be handled or be present as cargo in ships' holds or service conveyances. Specific ship categories are addressed in paragraphs 7-10.1 through 7-10.3. The total quantity of explosives on board a ship shall be determined as specified in paragraph 7-4.2. ESQD requirements specified in this section apply to HC/D 1.1 explosives. When the only hazards involved are those associated with non-mass-detonating ammunition and explosives, HC/D 1.2 through 1.4 and HC/D 2.3 or 6.1, these hazards shall be considered as specified in paragraphs 7-8.2 through 7-8.7 and elsewhere in this chapter. There are three categories of ammunition handling piers: ammunition terminal facilities (paragraph 7-10.4), general ship berthing facilities (paragraph 7-10.12), and barge piers (paragraph 7-10.13.1). Exceptions to these ESQD standards include the following:

a. Ammunition or explosives stored in ships magazines that are intended for use by shipboard armament or aircraft as defined in paragraphs 7-10.1 or 7-10.2, or for maintenance movements or weapons system operability tests of this ammunition.

b. Handling of 300 pounds NEW or less of HC/D 1.3 and 1.4 material, necessary for ship security and safety at sea. Handling locations for these items at Navy activities must be site approved by NOSSA Atlantic/Pacific in accordance with paragraph 8-1.2.1. Infrequent handling of these materials at commercial piers or shipyards do not require site approvals. Handling of Safety of Life at Sea (SOLAS) HC/D 1.4G and 1.4S material to DoW owned or contracted small craft do not require site approval for evolutions involving less than 10 pounds NEW. This SOLAS exception does not apply to USN or USNS ships.

c. The movement of security force ammunition, by security personnel, between ships or small craft and piers or wharves; or between ships and small craft. These movements must be integral to security operations and do not apply to cargo or ship allowance moves. The ammunition is limited to 150 pounds NEW of HC/D 1.1, 1.2, 1.3 and 1.4 material (HC/D 1.1 not to exceed 40 pounds NEW) that directly support the security force mission. Examples include harbor patrol craft and anti-terrorism/force protection escorts. This exception applies to both naval and commercial piers and permits security force ammunition to remain secured on ships and small craft, as necessary to support ongoing security missions, but does not permit storage on ships in shipyards for repairs.

d. Cargo ammunition stored in cargo ammunition ships (T-AOE, T-AKE, and AS class) when the ammunition does not exceed 400 pounds NEW of HC/D 1.2.2, 2,500 pounds of NEW of HC/D 1.3, and MEQ of HC/D 1.4 material.

7-10.1. COMBATANTS. The ammunition carried in a ship's magazines, launchers, or ready service lockers, which are to be used solely in support of the ship's mission by installed shipboard weapons systems or by embarked aircraft, are exempt from the application of ESQD requirements, except when it is being handled or in the process of being stowed. This is known as the combatant exemption. Combatant vessels are defined in SECNAVINST 5030.8 (series). Only the NEW of the ammunition being handled and/or staged on the pier need be considered. Criteria for when the ammunition is considered secured onboard is provided by paragraph 7-6.2.8. Exception to this rule involves:

a. SSBN. If the hatches are open for any operation related directly to the missile (i.e., loading or maintenance) the total NEW of all missiles onboard must be applied.

b. SSGN. The ESQD arc for handling missiles to/from an SSGN is based on the NEW of one launch tube, provided only one hatch is opened at a time. If more than one tube is opened, the total NEW in the submarine must be applied. The ESQD arc is the greater of the Special Operations Forces (SOF) ammunition NEW, or the reduced ESQD arc for TOMAHAWK loading on SSGN defined in table 7-8.

7-10.2. AMPHIBIOUS WARFARE SHIPS. Amphibious warfare ships carrying Landing Force Operational Reserve Materiel (LFORM) ammunition and explosives in LFORM storage spaces in support of the ship's mission are exempt from ESQD criteria under the combatant exemption (paragraph 7-10.1), except during handling evolutions, provided the ammunition and explosives are stored under the conditions delineated in NAVSEA OP 4.

7-10.3. CARGO AMMUNITION SHIPS. Explosives and ammunition are stowed relatively close to each other onboard cargo type vessels such as T-AKE, T-AOE and AS class, Maritime Prepositioning Force ships (MPF), and point-to-point shipments in Military Sealift Command (MSC) or commercial vessels. Collectively, these ships, when carrying cargo ammunition, will generate an ESQD arc, based on the amount of cargo ammunition onboard. Ammunition carried to support the ships' self defense weapons systems is not factored into the total cargo load, nor will that ammunition generate an ESQD arc in the absence of cargo ammunition. A detonation in the mass-detonating part of the cargo would receive considerable support from parts of the cargo normally considered fragment or fire hazards. Accordingly, the total NEW should be calculated in accordance with paragraph 7-4.2, with the exception of MPF ships which are based on the total NEW of all HC/Ds. For planning purposes, the following general ratios may be used; however, these ratios cannot be accepted for siting or waiver/exemption requests.

a. For a general explosive cargo; 30% of the gross packaged weight.

b. For a solid cargo of bombs; 40% of the gross packaged weight.

c. For an ammunition ship (T-AKE, T-AOE); 25% of the gross packaged weight.

d. For FBM HC/D 1.1 propellants; the additive weight of all rocket motors in cargo status.

e. If the cargo ammunition ship cargo load does not exceed 400 pounds NEW of HC/D 1.2.2, 2,500 NEW of HC/D 1.3, and MEQ of HC/D 1.4 material, the parameters of paragraph 7-10.1 for combatants may be applied.

Determination of ESQD arcs for MPF ships can be established using K=40.85 with a 3,700-foot minimum fragments distance for inhabited building distance and K=24.01 for PTR distance. These reduced distances are applicable provided no more than 52% of the NEW is HC/D 1.1 material. Above 52%, the K-factor increases as shown in table 7-24. Above 65% HC/D 1.1 material, the values in table 7-7 apply. The amount of HC/D 1.3 does not affect the result.

7-10.4. AMMUNITION TERMINAL PORT FACILITIES. The application of ESQD standards in various explosive cargo ammunition ship unit situations at explosives handling piers (piers used primarily for handling explosive cargo), scuttling sites, and explosives anchorages is illustrated in figure 7-3. References to the appropriate ESQD tables for each relationship shown appear in notes to the figure. The ESQD considerations involved between ship units and other target areas are specified in table 7-26. Table 7-7 shall be used to determine separation distances between explosives pier or wharf

facilities and such ESs as administrative or industrial areas, terminal boundaries, the main ship channel, and PTRs.

7-10.5. OBJECTIVES OF SHIP UNIT SEPARATION AT AMMUNITION TERMINAL PORT FACILITIES. The basic objectives of ship unit (ship or barge) separation are:

7-10.5.1. To separate ship units at the same pier by a sufficient distance to avert, or greatly reduce, the possibility of mass detonation of an adjacent ship unit when a detonation occurs on one ship. These standards also provide separation from other targets on the basis of the greatest amount of mass-detonating explosives in any one ship unit. Separation of any two ships by the distances specified in table 7-14 column 11 provides as much protection against communication of an explosion as is provided for aboveground magazines. At these distances, the coalescence of shock waves from two adjacent explosions is unlikely, and therefore the quantities of explosives in the two need not be combined for ESQD purposes. If separation distances less than specified in table 7-14 column 11 must be used to separate adjacent ship units, the amount of explosives in both units must be totaled for determining separation distances to other targets.

7-10.5.2. To avert, or greatly reduce, the possibility of communication of an explosion between separate ship units at different piers by a sufficient distance as shown in table 7-27 column 4. This separation is sufficient to protect ships in adjacent units from blast and fragments will be limited to the superstructure and nonvital members, and the possibility of deaths and injuries will be reduced to a minimum.

NOTE

Separation distance requirements for quantities of ammunition and explosives not provided in table 7-27 can be interpolated or extrapolated using the formulas cited in the column headings.

7-10.5.3. To limit damage of nonexplosive ships to that of a minor nature, thereby virtually eliminating deaths and serious injuries, distances shown in table 7-27 column 5 are used between separate ships units loaded with explosives from nonexplosive piers or cargo ships.

7-10.5.4. Separation requirements for tenders are provided in paragraph 7-10.6.1.

7-10.5.5. If separation distances between ship units do not comply with the preceding subparagraphs, the greatest separation consistent with existing operational requirements shall be maintained. Communication between explosive units without intervening protection is considered virtually certain at separation distances of 300 feet or less. At separation distances of more than 300 feet the probability of communicating an explosion decreases as the distance increases even though a finite probability value cannot be assigned to different separation distances. For any given separation, the probability is lessened if ships are moored in tandem rather than in parallel, and if their hatches are closed instead of having exposed ammunition on deck and in open holds.

7-10.6. DETERMINING SEPARATION DISTANCES AT AMMUNITION PORT FACILITIES.

7-10.6.1. Separation Distance Between Piers. The separation distance between piers shall be measured from the nearest point of the ship unit at one pier to the nearest point of the ship unit at the other pier. The ship unit is created by the portion of the pier that would have ammunition and explosives staged for movement, the ship's ammunition and explosives cargo magazines and adjacent explosives loaded barges not meeting adequate separation to prevent propagation. The staging area

will include space used for laydown area as well as staging explosives laden railcars and trucks. When this combined unit cannot meet the required separation distance specified in figure 7-3 to prevent propagation, ship units at the same pier must be added together and the total NEW used to determine separation based on the requirements of figure 7-3. Separation of tenders at different (existing) piers can be accomplished using the distances specified in table 7-27 column 3, if the distances in figure 7-3 cannot be met. Existing piers are those that were operational prior to 1 January 1975. Construction of new piers, intended for tender berthing, must meet unbarricaded intraline distance of table 7-10, column 3 when one or both tenders are at the new pier. The measurement for separation distance is made from the closest bulkhead of the major weapons magazine area on one tender to the like bulkhead on the other tender. Where permitted by pier strength, slip width and location of utilities, tenders will be berthed only at the seaward end of piers.

7-10.6.2. Separation from Scuttling Sites or Explosives Anchorages. Measurements from scuttling sites or explosives anchorages to outside targets will generally begin at the boundary of the designated scuttling site or anchorage zone. For explosives anchorages, the separation distance from the boundary of the designated anchorage zone to outside targets will depend on whether the ship units being loaded or unloaded in their designated area within the zone are properly separated from loaded ship units in another area, for the amount of ammunition and explosives involved and whether loaded ships within the loaded ship area are properly separated from each other. (See figure 7-3.) If loaded ships in the loaded ship area are not properly separated from each other, the total NEW for all ships in the area shall be used to determine the proper separation distance to outside targets. The ship unit equivalent for an explosive anchorage is a circle having a radius equal to the distance from the mooring buoy or the ship's anchor to the stern of the ship or the stern of any ammunition lighters along side when the anchor line is taut. To maintain proper separation distances between loading or unloading ship units in the explosives anchorage, the ships should moor or anchor so that they never have a separation distance less than specified in table 7-14 column 11.

7-10.6.3. Separation of Ships Moored to Dolphins. When ships are moored to dolphins or interrupted quays, the separation distance shall be from the outer corners of ship's explosives cargo hold to the nearest cargo hold of another ship.

7-10.6.4. Separation from Ships or Barges Moored at Pier to Fixed Shore Targets. The measurement of separation distance from a ship unit moored at a pier to fixed targets on land shall be from the nearest portion of the ship's cargo hold or barge to the nearest fixed target.

7-10.6.5. Separation Between Ship Units and Other Targets. It is not practical to specify separation distances for every situation that may arise at a pier, wharf or anchorage. Many conditions must be considered to decide the degree of protection needed. It is the responsibility of the activity involved to determine what level of protection is acceptable after considering the standards and the hazards involved and submitting site approval requests in accordance with paragraph 8-1.2. for any proposed operation or construction within ESQD arcs.

7-10.7. ESQD REQUIREMENTS AT AMMUNITION TERMINAL PIERS. The relationship of ships, barges and explosive loading piers to other facilities is provided in table 7-26. The term “ship unit” includes any combination of ship, barge, or pier/wharf not separated from one another by the required distance to prevent propagation between the units as defined in paragraph 7-10.6.1. Common siting scenarios are further defined in the following paragraphs.

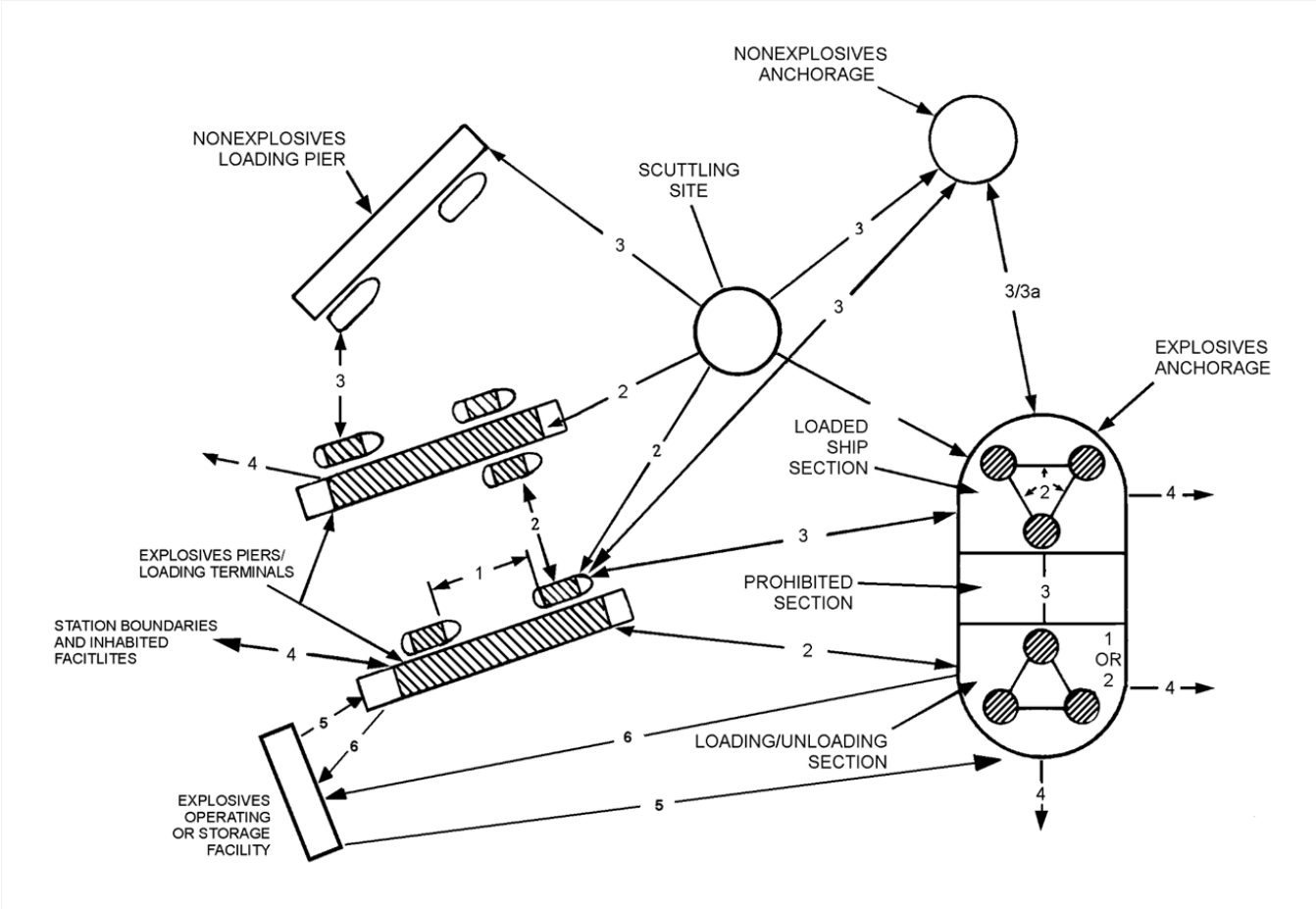

Separation Distance	Refer to
1	Table 7-14, Column 11 (K = 11)
2	Table 7-27, Column 4 (K = 18)
3	Table 7-27, Column 5 (K = 40)
3a	See paragraph 7-10.8.8 for Prepositioning Program Ships
4	Table 7-7, Columns 5 and 9 (K = 40 and K = 50) IBD or PTR as applicable
5	Table 7-7, Column 5
6	Table 7-14, Column 11 (K-11), Column 9 (K=6)

Ship and Barge Units

Figure 7-3. Application of Quantity-Distance at Ammunition Terminals

7-10.7.1. Ship to Ship. Measurements of separation distances between ship units at explosives loading piers given in table 7-14 column 11 shall be from the nearest portion of one ship's explosive cargo hold to the nearest portion of the other. Railcar or motor vehicles that pass between the ship units are considered an operational risk. However, spotted railcars and motor vehicles must be considered as part of the ship unit. It is generally impractical to separate berths at a single pier by a sufficient distance to prevent the mass detonation of ships containing complete cargoes of HC/D 1.1 ammunition. When operationally feasible, scheduling should reduce the number of these exposures

and the total time required for each exposure. Ships moored in tandem or on opposite sides of the same pier, together with the pier and adjacent working space are considered as one ship unit. The total quantity of the ammunition and explosives present shall be considered for ESQD purposes. However, ships moored at the same pier should be separated as much as possible to reduce the likelihood of an explosion propagating due to fragments or fire. When two ships cannot be separated by the distance specified in table 7-14 column 11 the spotting of railcars and the loading of hatches in both ships should be planned so that the greatest possible distance between open hatches of both ships, and between motor vehicles and railcars servicing the two ships will be created. When possible, ship loading should be staggered. Mooring two ships in tandem rather than opposite each other will help decrease the fragment hazard to the explosives cargo of the second ship because of the additional protection afforded by the bows and sterns of the ships.

7-10.7.2. Pier to Pier. ESQD relationships between explosives loading piers shall comply with table 7-27 column 4. This ESQD relationship is based on the premise that if a ship with a full load of mass-detonating explosives and ammunition exploded as a unit at one pier, the possibility of propagating the explosion to another ammunition ship at the other pier would be remote. Also, damage to other ships from fragments and blast would be limited to some damage by fragments to decks and superstructure, the cutting of some electrical wiring, the buckling of some doors and bulkheads on weather decks, and the disarrangement of some radio and radar antenna and equipment. However, flying fragments or secondary effects of the blast including being thrown overboard, losing footing, or being struck by loose objects could possibly injure or kill exposed personnel.

7-10.7.3. Ship Unit to Nonexplosives Loading Pier or Other Ships. The ESQD relationship between cargo ammunition ships with the exception of ships loaded in accordance with paragraph 7-10.d and nonexplosives loading piers or other nonexplosives carrying ships (excluding Navy combatants or service craft) shall comply with the requirements in table 7-27 column 5 (K=40). If a ship with mass-detonating explosives exploded, ships separated from it by these distances would suffer only minor superficial damage from the blast wave and only a few fragments would probably hit the ship. The possibility of fatalities or serious injuries would be small. The distances shown in table 7-27 column 5 are recommended for the protection of loaded ammunition ships, nonexplosive carrying ships, and laid-up ships. After an ammunition ship has been loaded, it should not be subjected to the hazards of a possible explosion from an ammunition ship that is still loading. The same precaution applies to nonmilitary and passenger ships. For protection of ships that are underway, the ESQD relationship specified in table 7-7 column 9 shall be used. The ESQD arcs between MPF ships and nonexplosives loading piers or other nonexplosives carrying ships can be established using the criteria in paragraph 7-10.3.d.

7-10.7.4. Ship Unit to Inhabited Building, Passenger Railroads, and Public Highways. The ESQD relationship between ship units and inhabited buildings is specified by table 7-7 column 5, and between ship units and passenger railroad or public highway by table 7-7 column 9.

7-10.7.5. Ship Unit to Explosives Operating Areas. Explosives operating areas shall be separated by intermagazine distances from ship or barge units. Ship or barge units will be separated from explosives operating areas by inhabited building distance, based on the explosive limit of the operating area, with exception of container stuffing operations defined in paragraph 7-9.2.1.l, in which case intraline distance can be used.

7-10.7.6. Ship Unit to Wharf Yard. Wharf yards shall be separated from ship units and other facilities as described in paragraph 7-12.13.

7-10.8. Q-D REQUIREMENTS AT EXPLOSIVES ANCHORAGES.

7-10.8.1. Loading and Unloading Section to Loaded Ship Section. The ESQD relationship between the shiploading and unloading section and the loaded ship section of an explosives anchorage shall comply with table 7-27 column 5 based upon the NEW in the ships when they are fully loaded.

7-10.8.2. Ship Unit to Ship Unit at Loading and Unloading Section. When the explosives anchorage is used only for loading and unloading ships, to prevent mass detonation, ships in the explosives anchorage shall be separated by the distances shown in table 7-14 column 11. Whenever possible, distances provided by table 7-27 column 4 should be used to reduce the loss potential from any incident.

7-10.8.3. Ship Unit to Ship Unit at Loaded Ship Section. The ESQD separation between loaded ships at a loaded ship section of an explosives anchorage shall be in accordance with table 7-27 column 4.

7-10.8.4. Explosives Anchorage to Explosives Pier. The ESQD relationship between the loaded ship section of an explosives anchorage and an explosives pier shall comply with the standards of table 7-27 column 5. This relationship should provide sufficient protection for loaded ships in the explosives anchorage from damage and protection for personnel from injuries. The ESQD relationship between the loading and unloading ship section of an explosives anchorage and an explosives pier shall comply with the standards given in table 7-27 column 4.

7-10.8.5. Explosives Anchorage to Nonexplosives Pier or Anchorage. The ESQD relationship between an explosives anchorage and a nonexplosives pier or anchorage shall comply with the standards in table 7-27, column 5.

7-10.8.6. Explosives Anchorage to Main Ship Channel. The ESQD relationship specified by table 7-7 column 9 shall apply between an explosives anchorage and the main ship channel as well as other routes normally used by ships entering or leaving the harbor. In addition to the requirements of table 7-7, the turning circles and stopping distances of ships in the main channel or other normally used routes should be considered. Assuming that the diameter of the turning circle of a ship is 1,000 yards (915 meters) the explosives anchorage should be located so that a ship with a jammed rudder in the channel would clear an anchored explosives-laden ship. From the turning circle standpoint, the separation distance should not be less than 1,000 yards. Occasional watercraft passing through the arcs, while outside both the main ship channel and normally traversed routes of ships entering and leaving the harbor, are not subject to ESQD requirements.

7-10.8.7. Explosives Anchorage to Inhabited Buildings or Public Traffic Routes. The ESQD relationship between an explosives anchorage and inhabited buildings shall comply with the requirements in table 7-7 column 5, and between an explosives anchorage and PTRs with table 7-7 column 9.

7-10.8.8. Separation of Preposition Program Ships at Anchorages. The Military Sealift Command's Prepositioning Program (that is., Combat Prepositioning Force, Maritime Prepositioning Force, Logistics Prepositioning Ships, etc.) operates both explosives-loaded and non-explosives carrying ships that are then deployed to key locations around the world. These ships are pre-loaded with military equipment and supplies necessary to support military forces on a short notice basis and thus support a common mission. The following criteria applies to Prepositioning Program ships at anchorage:

a. Non-explosives carrying ships shall be separated from explosives-loaded ships by a minimum of $18W^{1/3}$.

b. Non-explosives carrying ships shall be separated from non-Prepositioning Program explosives-loaded ships by $40W^{1/3}$.

c. Non-explosives carrying ships not associated with the Prepositioning Program shall be separated from all explosives-carrying ships by $40W^{1/3}$.

d. All non-explosives carrying ships shall be separated from explosives ships being loaded or unloaded by $40W^{1/3}$.

7-10.9. ESQD REQUIREMENTS AT SCUTTLING SITES. A properly located scuttling site shall be provided, if practicable, in the event a vessel that has caught fire can be moved to avoid damage to piers or other ships. The scuttling site shall have sufficient sea room and water depth to permit sinking the largest vessel handled at the installation so its holds will be completely flooded at low water. Because an explosion may occur while the vessel is being towed, the scuttling site shall be located where the best available protection will be provided to other ships, piers and shore installations. The location of the scuttling site should reflect the greatest NEW that may be in a single ship to be scuttled at one time. The following ESQD requirements shall apply to scuttling sites:

a. To nonexplosive piers and anchorages; table 7-27 column 5.

b. To explosives anchorages; table 7-27 column 5.

c. To explosives piers; table 7-27 column 4.

d. To inhabited buildings; table 7-7 column 5.

e. To PTRs; table 7-7 column 9 (regardless of traffic density).

7-10.10. ESQD REQUIREMENTS AT WHARF YARDS. See paragraph 7-12.13.

7-10.11. GENERAL CARGO AND VEHICLES AT AMMUNITION TERMINALS. Mission related general cargo, vehicles, and ammunition may be transferred concurrently through a terminal for the purpose of loading and/or offloading the same ship. Concurrent operations involving other ships shall be conducted at applicable ESQD separations. Inert materials and equipment in holding areas shall be separated to the extent possible, in order to limit the exposure of unnecessary personnel and reduce congestion of the terminal area. Any labor intense activity shall take place at applicable ESQD separation.

7-10.12. GENERAL BERTHING FACILIITES. Berthing of ships that do not have cargo ammunition onboard or that meet the parameters of paragraph 7-10.d are permitted at any berthing pier since ESQD arcs are not applicable to their service ammunition as defined in paragraph 7-10.1. Limited ammunition handling is permitted provided the following conditions are met:

a. Appropriate ESQD requirements.

b. Restrictions on in port handling evolutions defined in paragraph 2-5.1.

c. Site approval or waiver of the handling site. Handling at piers other than ammunition terminal piers are intended only for top-offs of ammunition allowances, not complete loadouts. ESQD considerations will be based solely on the ammunition being handled on the pier and that which has not been secured onboard the ship. The expression “secured onboard” is explained fully in paragraph

7-6.2.8. The ESQD arcs will be struck from the area of the pier where the handling occurs and where ammunition is staged, and the portion of the ship where the ammunition is secured. If handling is from a barge, the barge unit and the portion of the ship where the ammunition is secured will generate ESQD arcs rather than the pier. In addition to the ESQD requirements in tables 7-7, 7-15 through 7-20, 7-12, 7-13 and 7-14 for respective Class/Division of ammunition, table 7-8 can be used to reduce ESQD requirements for limited handling of specific weapons. There are no specific ship to ship or pier to pier separation requirements other than the limitations defined in paragraph 2-5 with the exception that unbarricaded intraline distance requirements of table 7-10, column 3 shall be maintained at all times between separate handling operations based on the largest net explosives present at any single transfer or handling point.

7-10.13. BARGE PIERS AND ANCHORAGES.

7-10.13.1. Barge Piers. Piers and wharves used exclusively for loading or unloading explosives on barges or utility craft (i.e., barge piers) shall be sited at intermagazine distance from all other potential explosive sites (to include from another barge pier or anchorage). As a potential explosive site, barge piers shall be sited as an ammunition terminal explosive pier in accordance with figure 7-3.

7-10.13.2. Barge Anchorages. Anchorages used only to moor explosive loaded barges and where explosive loading or unloading is not permitted (i.e., barge anchorages) shall be sited at intermagazine distance from all other potential explosive sites (to include from another barge anchorage or barge pier). As a potential explosion site, barge anchorages shall be sited as an explosive anchorage in accordance with figure 7-3.

7-11. AIRPORTS AND HELIPADS.

7-11.1. GENERAL. The ESQD requirements in this paragraph are for use by DON shore activities and defense agencies (DoW Components) to determine the acceptable level of protection for ammunition and explosives under the control and custody of DoW personnel, stored and handled at or near airfields and helipads that are:

a. Owned and used exclusively by DoW Components.

b. Owned by DoW Components and used jointly by DoW/Non-DoW Components.

c. Owned by Non-DoW Components and used jointly by Non-DoW/DoW Components. The term "joint DoD-Non DoD Use Runway/Taxiway" applies to a runway/taxiway serving both DoW and commercial aircraft. A runway/taxiway serving solely DoW, DoW-chartered, or non-DoW aircraft on DoW authorized business is not considered "joint-use."

7-11.1.1. Exceptions. The provisions of this paragraph and the site approval requirements of paragraph 8-1.2 do not apply to explosive items installed on aircraft or contained in survival and rescue kits, such as signals, flares, egress system components, squibs and detonators for jettisoning external stores, engine starter cartridges, fire extinguisher cartridges, destructors in electronic equipment, explosive components of emergency kits and equipment, and other items or materials necessary for safe flight operations. Aircraft loaded only with the munitions shown below are also exempt from the quantity-distance requirements when evaluated as a PES and parked in designated aircraft parking areas. Uploading and downloading of these munitions can be conducted at designated aircraft parking areas provided the quantity of munitions involved in the operation is limited to a single aircraft load.

a. Gun ammunition 30 mm TP or less.

b. HC/D 1.3 pyrotechnics or aircraft defensive flare/chaff.

c. HC/D 1.4 munitions and captive air training missiles.

7-11.1.1.1. Embarked Security/Response Force Ammunition. Security/Response force ammunition issued to embarked security or rapid response forces for designated missions is limited to 150 pounds NEW, HC/D 1.1, 1.2, 1.3 and 1.4 material not to exceed 40 pounds of HC/D 1.1. The ammunition can remain secured on the aircraft as necessary to support ongoing missions.

7-11.1.1.2. Captive Air Training Missiles. Captive Air Training Missiles (CATM) are authorized in an aircraft hangar, without modification to the site approval, provided the following requirements are met:

a. All aircraft stores release cartridges are removed from aircraft bomb racks and ejectors and stored in ready service lockers or magazines.

b. The CATM contains only HC/D 1.4 material.

c. A total of 25 pounds NEW of HC/D 1.4 for all CATMs is not exceeded.

d. CATMs not on aircraft are stored in approved skids in designated areas. Inert CATMs may be stored in their shipping containers in the hangar in conformance with appropriate security requirements.

e. Hangar is equipped with posted fire symbols, panic hardware on doors, and a sprinkler system.

f. All security requirements are maintained.

7-11.1.2. Application of Airfield Clearance Criteria. In conjunction with airfield clearance criteria specified by FC 2-000-05N, UFC 3-260-01, and Federal Aviation Regulations contained in 14 CFR, Part 77, these ESQD standards shall be applied as follows:

7-11.1.2.1. Airfields and helipads used exclusively by DoW Components or military components of allied nations, as well as related combat aircraft parking areas, ammunition and explosive cargo areas, alert hangars, and shelters may be located within the airfield clearance zone if applicable ESQD standards are observed, except in the landing lane clear zones and accident potential zones (APZ) I and II of all aircraft landing facilities, as designated in the installation's Air Installation Compatibility of Use Zone (AICUZ) report.

7-11.1.2.2. Airfields and helipads used jointly by DoW and Non-DoW Components for aircraft passenger transport operations, as well as related combat aircraft parking areas, ammunition and explosive cargo areas, alert hangars, and shelters shall be located as specified in tables 7-28 and 7-30. ESQD separation is required for these locations in relation to the taxiways that are used exclusively for DoW Component aircraft and are constructed as part of the location.

NOTE

Separation distance requirements for quantities of explosives not provided in table 7-28 can be interpolated or extrapolated using the formulas cited in the column headings.

7-11.1.2.3. Passenger transport operations conducted at DoW Component airfields shall be subject to the same ESQD requirements as joint use DoW/Non-DoW Component airfields and helipads except

when operational necessity dictates that no ESQD be assigned from runways and taxiways to aircraft containing ammunition and explosives.

7-11.1.2.4. Helicopter landing areas for loading and unloading ammunition within storage sites and quick reaction alert sites shall be considered aboveground magazines and may be sited at appropriate ESQD based only upon explosives carried by the helicopter(s). Intermagazine distances shall apply to magazines and maintenance buildings subject to the following requirements:

a. Flight clearance criteria are met.

b. Landing and takeoff approaches shall not be over magazines.

c. Helicopter operations are to be limited to ammunition support of the magazines concerned. Carrying passengers is not permitted.

7-11.1.2.5. Ammunition and explosives are prohibited in APZ I and II and clear zones of all aircraft landing facilities, as designated in detail in the installation's AICUZ report.

7-11.1.3. Concurrent Explosives Operations. Explosives operations shall not be conducted in the magazines or maintenance buildings located within inhabited building distance from the helicopter landing area during takeoff, landing, or loading and/or offloading of the helicopter(s). Those maintenance buildings and magazines shall be closed.

7-11.2. ESQD REQUIREMENTS.

7-11.2.1. Ammunition and Explosives Safety Distances. Distances specified in tables 7-28 and 7-29 shall be applied to facilities in relation to airfield and helipad operations.

7-11.2.1.1. Also see paragraph 7-4.5.4 and 7-4.5.5 for separation distances required from loaded aircraft to loaded aircraft and from explosive site to taxiways and runways.

7-11.2.1.2. Combat aircraft loaded with combat munitions or aircraft loaded with explosive cargo shall proceed to and from the duty runway by a route that provides the greatest possible separation from all the areas noted in table 7-29. No stops shall be made when traveling to and from the duty runway, except as necessary for arming or dearming or for safe ground operation of the aircraft.

7-11.2.1.3. Ordnance handling pads (red label area, cargo loading pad) are provided for air installations where there is a requirement for loading or offloading explosives from cargo aircraft and where aprons are not available for use without violating explosives safety distance criteria. The ordnance handling pad shall be sited in accordance with the airfield explosive prohibited area regulations in paragraph 7-11.3 and the requirements in tables 7-28 and 7-29. Also, the ordnance pad should be located so it does not violate the primary surface that extends 1,000 feet, 750 feet at established installations, on each side of the runway centerline, the 7:1 lateral transition slope, or other pertinent airfield flight safety criteria. Barricades shall be provided where required by ESQD criteria or where a net reduction in cost may result. ESQD arcs will be struck from the portion of the pad where explosives will be handled or staged.

7-11.2.1.4. Arming and dearming pads are used for the arming and dearming of installed combat aircraft ordnance. They shall be located adjacent to runway thresholds, usually at either end of the primary runway. They are used at all DON air installations where gunnery, rocketry, and/or missile firing are conducted. Airfield safety and explosive safety criteria, including site approval, do not

apply because aircraft are assumed to be under the control of the tower. Arming or dearming shall be conducted with the aircraft headed away from inhabited areas that are on or near the air installation.

7-11.2.1.5. Combat aircraft loading and parking areas are specifically designated for loading and unloading combat configured stores aboard aircraft and areas where loaded aircraft are parked. They shall be sited at appropriate inhabited building distances determined by the type and amount of the munitions to be loaded or unloaded. For HC/D 1.1 munitions, use table 7-7 to determine distances, and for HC/D 1.3 munitions use table 7-20. If multiple hazard classes are expected to be loaded, the area should be sited using appropriate distances based on the greatest hazard. In addition, appropriate airfield flight safety criteria also should be observed when determining the site. Separation between combat loaded aircraft should be the minimum unbarricaded aboveground magazine distance based on the hazard class of munitions loaded and shall be measured from munitions to munitions. For HC/D 1.1 munitions use table 7-14 column 11. Maintaining this distance between loaded aircraft prevents simultaneous detonation of mass-detonating explosives on nearby aircraft, thereby reducing the maximum credible event on the pad to one aircraft. When this distance can be maintained, ESQD arcs drawn from the pad to other facilities can be based on the maximum load at the nearest aircraft spot to the ES. If unbarricaded aboveground distance cannot be maintained, the NEW of aircraft must be combined. Ammunition staged on the pad or adjacent to the pad must be separated by intermagazine distance from the nearest aircraft. ESQD arcs to other facilities must consider the total NEW staged. When HC/D 1.2 munitions are loaded, the separation of aircraft is based on the command's decision, respective to the level of protection desired for adjacent aircraft, since these munitions do not mass detonate.

7-11.2.1.6. Practice Bombs, Decoy Flares, and Chaff Buckets. The following siting criteria must be applied to areas used for the assembly/disassembly and staging of practice bombs, decoy flares, and chaff buckets.

a. Fuzed BDU-45 Practice Bombs. Assembly/disassembly areas for BDU-45 Practice Bombs must be sited (see paragraph 8-1.2) as HC/D 1.1 operational sites since some fuzes, as packaged, are HC/D 1.1 items. Once the fuzes are assembled into the bomb bodies, the fully assembled BDU-45 Practice Bomb becomes a HC/D 1.4 item due to the non-propagating characteristic of the bombs. Assembled BDU-45 Practice Bombs may be handled and loaded on aircraft, without application of ESQD arcs in accordance with paragraph 7-11.1.1.

b. HC/D 1.4 and 1.3 Practice Bombs, Decoy Flares, and Chaff Buckets. These items may be assembled or disassembled and staged on flight lines provided a 50 feet fire safety distance is met from any Ready Service Locker (RSL), ready service magazine, portable magazine, or any other ordnance storage facility, and to any other structure or parked aircraft. When the net explosives weight at the assembly area does not exceed 50 pounds (HC/D 1.3 or 1.4) the 50 feet separation distance to all structures, with exception of parked aircraft, fuel tanks, or motorized vehicles, can be reduced to 20 feet. Motorized vehicles [that is, materials handling equipment (MHE)/ground support equipment (GSE)] supporting ordnance moves are not restricted by a set-back distance, but should not be located near the RSLs or the assembly area any longer than necessary to support mission requirements. In all cases the doors of adjacent RSLs or magazines must remain closed during assembly/disassembly operations. While these assembly and staging areas do not require site approval in accordance with paragraph 8-1.2, all RSLs, ready service magazines and portable magazines must be sited in accordance with paragraph 8-1.2. Staging assembled items is restricted to 24 hours and is not permissible overnight, unless the items are being used to support continual operations.

7-11.3. AMMUNITION AND EXPLOSIVES PROHIBITED AREAS (AIRFIELD EXPLOSIVE PROHIBITED AREA). Ammunition and explosive facilities shall be prohibited in areas within approach

and departure zones at all fixed and rotary wing aircraft landing facilities, including DoW, other federal joint use, and civil facilities. The approach and departure zones for aircraft are those areas designated and described in detail for the various types of facilities in airfield and airspace criteria directives. The approach and departure zones begin near the end of a runway or landing area and extends outward a given distance along, and symmetrically on each side of, the extended runway center line or the aircraft approach axis of a heliport. These zones flare uniformly from the landing areas outward to a specified limit. Specific examples may be found in NAVFAC Design Manual DM-21 or MIL-HDBK-1021, and NAVFAC Definitive Drawings P-272 (series). Aircraft overfly restrictions are identified in paragraph 2-1.7.

7-12. ESQD DETERMINATION AT MISCELLANEOUS EXPLOSIVES FACILITIES.

7-12.1. SEGREGATION FACILITIES. Segregation facilities shall be sited as explosive operating buildings with respect to other PESs. Typical segregation facilities are described in paragraph 8-5.1. Refer to paragraph 12-9.4 for regulations governing operations.

7-12.2. HOLDING YARDS. Holding yards shall be separated from other facilities by the applicable quantity distance. Separation distance between each unit car-group is measured from the closest distances between unit car groups (similar to ship unit measurement). Where the type of rail holding yard is formed by running two parallel ladder tracks connected by diagonal spurs, the parallel tracks and the diagonal spurs shall be separated by applicable aboveground magazine distances for the unit group quantities of high explosives. When the rail holding yard is in the “Christmas tree” arrangement, consisting of a ladder track with diagonal dead-end spurs projecting from each side at alternate intervals, the spurs should be separated by the applicable aboveground magazine distance for the NEW in the railcars on the spurs. The spurs shall accommodate not more than 10 railcars.

7-12.3. CLASSIFICATION YARDS. For protection of the classification yard from external explosions, separation distances shall be at least the applicable magazine distance as determined by the hazard classification and quantity of the material at other PESs. Specific separation distance is not required from classification yards to facilities other than explosive locations when the yard is used exclusively for purposes listed in paragraph 8-5.3. If the yard is used at any time for any other purpose, such as placing or removing dunnage or explosive items into or from the railcars, or trucks, ESQD requirements as determined by the quantity and hazard classification of the material applies.

7-12.4. INSPECTION AND WEIGHING STATIONS. Specific ESQD requirements are not applicable to explosive loaded railcar and motor vehicle inspection and weighing stations. However, these stations should be as remote as possible from hazardous or populated areas. Activities performed at inspection and weighing stations are described in paragraph 8-5.5. If any other activity is conducted at the inspection station, applicable quantity-distances shall apply.

7-12.5. SUSPECT CARGO SITES. Suspect cargo sites will be sited using intermagazine distance to and from magazines and explosives storage sites, and intraline distance to explosive operating buildings. Inhabited building distance will be applied to all other inhabited facilities, including those normally permitted at public traffic route distance, such as recreation and training sites and roads used by personnel unrelated to the suspect site. If not protected by a lightning protection system, all personnel will be evacuated to inhabited building distance at the approach of a lightning storm, based on the suspect material at the site. Use of suspect cargo sites is described in paragraph 8-5.6.

7-12.6. VACUUM ACCUMULATOR BUILDING. The vacuum accumulator building shall be separated from the loading building by an intraline distance based on the quantity of high explosive allowed in the

vacuum accumulator building. The vacuum collection system shall meet the design requirements of paragraph 9-3.4.

7-12.7. DETACHED LOADING DOCKS. Separated loading docks, when not part of an existing facility or magazine that services multiple facilities, shall be sited on the basis of use. When servicing magazines, they must be separated from the magazines by intermagazine distances based only on the explosive limit of the loading dock. When servicing operating buildings, they must be separated from the operating buildings by intraline distances, based only on the explosive limit of the loading dock. They shall be sited as aboveground magazines to all other facilities.

7-12.8. EXPLOSIVE-LOADED RAIL CARS AND MOTOR VEHICLES. Explosive loaded railcars, motor vehicles, MILVANS or ISO containers must be considered aboveground magazines, with respect to the hazard involved, when parked in unbarricaded areas. When explosive-loaded cars or motor vehicles are parked within a barricaded area, such as a barricaded siding, the conveyances may be considered barricaded in all directions except at unbarricaded open ends of the location. The provisions of paragraph 7-4.5.2 shall apply and the siting criteria for aboveground, non-earth-covered magazines as given in tables 7-7 and 7-15 shall be used. Where the open ends of such locations are not barricaded, unbarricaded distances shall be used and the locations oriented so that the open ends are directed toward other barricades or unoccupied space to the extent of unbarricaded distance requirements. Railcar or motor vehicle NEW will be added to the explosive weight of adjacent PESs and must not violate siting criteria.

7-12.9. DEMOLITION/TREATMENT SITES. The treatment of ammunition, explosives, or similarly hazardous materials shall be undertaken ashore only in those areas or locations that have been specifically site approved for that purpose in accordance with paragraph 8-1.2. The site selected for the treatment of explosives and ammunition or demolition training shall be located in accordance with requirements of chapter 13. Also, refer to OPNAVINST 3770.2 (series) for FAA clearance requirements. In planning treatment operations and selecting sites, consideration shall be given to the effect of the operations on the population in the area surrounding the site as well as the danger of damage to property or building by fragments or shock. Sites for detonation and burning of explosives shall be separated from other facilities based on the hazards associated with the quantity and type of material to be treated. Additional requirements for areas where ammunition and explosives will be treated by burning or detonation are described in paragraphs 13-2.2 and 13-3.2.

7-12.10. SAFE HAVEN. Commanding officers and officers in charge of DON CONUS activities are authorized to grant refuge to military and military sponsored shipments of explosives, hazardous materials, or other sensitive items endangered by civil disturbance or natural disaster as described in NAVSEA SW020-AG-SAF-010. To the extent possible, the compatibility restrictions, ESQD and lightning protection requirements of this manual will be observed. For Department of Energy controlled shipments, refer to OPNAVINST 5740.12 (series).

7-12.11. TEMPORARY PARKING. All DON activities engaged in receiving, storing, and issuing ammunition and explosives shall establish a program for parking explosives loaded commercial vehicles as described in NAVSEA SW020-AG-SAF-010 (formerly OP 2165 Volume 1). When vehicle holding yards are used for this purpose they must meet the ESQD requirements of NAVSEA SW020-AC-SAF-010 for (at a minimum) the greatest hazard classification of material handled on station as well as lightning protection requirements.

7-12.12. AIRCRAFT EGRESS AND EMERGENCY LIFE SVING DEVICES SHOPS. Facilities or rooms within nonexplosives facilities that are used for storage and work on aircraft egress devices, signaling devices, life vests and life rafts can be approved for limited amounts of HC/D 1.3 and 1.4

material without regard to ESQD or the specific siting, design and construction requirements of paragraph 8-3. Such facilities include aircraft hangars, troop buildings and manufacturing or operating buildings. Approval can be accomplished by NOSSA for all activities or by NOSSA Atlantic/Pacific for Navy activities, or by MARCORSYSCOM for Marine Corps activities in accordance with paragraph 8-1.2. Unless specified in the approval, these areas must have a fire symbol posted on the facility and outside the interior room, panic hardware on a minimum of one door and for a newly constructed facility, a sprinkler system, if hazardous material remains in the area overnight. Existing facilities should have sprinkler systems for overnight storage, but can operate without, provided there is an alarm monitored during off-duty hours and the shop does not retain more than 25 pounds NEW of HC/D 1.3 and 1.4 material overnight (not to be inactive in excess of 108 hours).

NOTE

Overnight storage with sprinkler system is permitted without duration limits. Storage without a sprinkler system is permitted for up to 108 hours, which may be extended if the material is actively being worked.

7-12.13. WHARF YARDS. A wharf yard shall be separated, when practical, from the pier it serves by a distance clearly sufficient to prevent sympathetic detonation as shown in table 7-14 column 11. Where this distance is not practical, the wharf yard shall be considered a part of the ship or barge unit and added to it when computing the total amount of explosives for ESQD purposes. The outer limit of the wharf yard shall then be considered the ship unit boundary for determining applicable ESQD requirements. The wharf yard shall be separated from all other inhabited facilities by at least 1,800 feet.

7-12.14. TRANSPORTATION CHANGE MODE LOCATIONS. Movement and transfer of DoW-titled ammunition and explosives must be in compliance with national, international, and host country specific transportation regulations. Quantity-distance criteria apply to all transfer operations involving DoW-titled ammunition and explosives except Roll-on, Roll-off (RORO) operations that meet the following requirements:

a. The total NEW present does not exceed 30,000 pounds of HC/D 1.1.

b. All ammunition and explosives present (for example, trailers, trucks, barges) must be associated with the RORO operation being conducted.

c. Ammunition and explosives shall be located on-site for the minimum time necessary, but the operation shall not exceed 24 hours following arrival of the ammunition and explosives.

d. If a location is available for RORO operations that was site approved using conventional quantitative ESQD criteria, it must be used.

1-1.1.1. If a site approved location is not available, a site approval request will be submitted to NOSSA or MARCORSYSCOM for review and approval in accordance with paragraph 8-1.2.1. MARCORSYSCOM will provide copies of all RORO site approvals to NOSSA. The proposed site shall be as remote as practicable from populated areas to minimize exposure of unrelated personnel. This option is available for locations on military activities, as well as public, commercial and foreign locations. The site approval requests will contain the following information and will be re-evaluated for continuation according to the following parameters:

e. For RORO operations involving HC/D 1.1 or 1.2.1 ordnance, a default 1,260 feet ESQD arc will be used unless the distances in table 7-9, or tables 7-16 and 7-17 provide lesser IBD. RORO locations that will be limited to other HC/Ds can use applicable IBD arc for those specific HC/Ds.

f. Submissions will identify all buildings and roads within the ESQD arcs, highlighting potential secondary hazards (that is, fuel tanks, power lines).

g. RORO sites will be evaluated during each RESRB Review, requiring an update of the previous submission requests. As such, CONUS sites will be evaluated every two years, and OCONUS sites every four years in the same manner as On-Base Road exposures discussed in paragraph 7-6.2.3.5. Activities not receiving an RESRB Review will submit a written request to re-certify their RORO site.

h. OCONUS RORO sites, not located on a DON activity and provided by a foreign government to support training or selected RORO sites located on other DoW Component installations, do not require site approval. For Marine Corps activities conducting RORO operations at OCONUS locations, not located on a Marine Corps activity, a risk assessment will be conducted by the Command Element safety office responsible for the exercise. A copy of the completed risk assessment will be provided to the MARFOR and MARCORSYSCOM. Risk assessments are not required for RORO operations conducted on other DoW component installations.

7-13. ESQD DETERMINATION AT NON-EXPLOSIVE FACILITIES.

7-13.1. ADMINISTRATION AND INDUSTRIAL AREAS AND AUXILIARY FACILITIES.

7-13.1.1. Administration and industrial areas shall be separated from PESs by inhabited building distances.

7-13.1.2. Auxiliary facilities such as heating plants, line offices, break areas, briefing rooms for daily work schedules or site safety matters, joiner shops, security posts, and similar functions may be located at PESs if they serve only one building or operation provided they are located and constructed so as to provide fire protection.

7-13.1.3. Structures necessary for providing personnel or equipment weather protection (including provision of power for such equipment) located at a PES that is sited at intermagazine distance from other PESs (for example, holding yards, detached loading docks, barge piers), and that support a single PES or operation, may be located at that PES without application of QD separation from any other PES. These structures must meet electrical and lightning protection standards of chapter 5 and 6 as appropriate. Explosives safety site plan approval is required for these structures.

7-13.2. RECREATION AND TRAINING FACILITIES. Open areas between PESs and nonexplosives structures should be carefully controlled for recreation or training use. As a general rule, the fragment hazard will be severe from the explosion site to allowable railroad and PTR distances. Accordingly, outdoor recreation and training facilities, where people are in the open, shall be sited at not less than PTR distances, and preferably as near inhabited building distances as practical. When structures, including bleacher stands, are included as part of these facilities, they shall be sited at not less than inhabited building distances. However, blast and fragment Q-D requirements may be relaxed when used only by military personnel at DON activities for off duty recreation at the PES. See paragraph 7-9.4.1.c.

7-13.3. SECURITY BUILDINGS. Inhabited building distances need not be applied to facilities housing security personnel who are required by their mission to have quick reaction capability in the immediate

vicinity of a PES. Such security facilities shall be provided with a minimum intraline distance separation of K9. Peak incident overpressures expected from an explosion at this distance will be about 11 psi, sufficient to render personnel within the building militarily ineffective. Strengthening the building to withstand small arms fire should provide reasonable protection against fragments and building debris, but not necessarily against blast. Therefore, consideration should be given to strengthening the building to provide blast protection to the occupants (refer to paragraph 7-8.1.1.3). These criteria apply to any security facility regardless of continuous occupancy and numbers of duty personnel, but may not be extended to barracks used as permanent quarters for assigned troops.

7-13.3.1. Security response facilities that support response force personnel meeting DoD S-5210.41-M-V1 mission requirements, and are hardened against small arms fire, require no Q-D separation from the PESs they support.

7-13.4. GUARD SHELTERS, GATE HOUSES, SENTRY POSTS, AND SIMILAR STRUCTURES. Guard shelters and similar structures, if they serve a specific area, are not subject to ESQD separation standards to that area but are subject to ESQD separation standards to unserved areas. Guard shelters and similar structures should be located to provide prudent fire protection from the explosives facility.

7-13.5. DUNNAGE LUMBER YARDS. Dunnage storage, preparation, salvage, and disposal yards shall be located sufficiently remote from piers and wharves so as not to constitute a fire hazard to waterfront facilities or areas surrounding lumber storage's. Dunnage yards may be sited at K9 (intraline distance) from a PES if used only by personnel at the PES. Adequate fire hydrants and firefighting equipment shall be provided at dunnage operations. Refer to paragraph 4-1.26 for further requirements regarding dunnage lumber yards.

7-13.6. INERT STORAGE.

a. Inert storage not directly related to explosives operations, stored in the open (no structure) must be sited at PTR (K24-30) distance from a PES, based on blast only. Minimum fragment distance does not apply.

b. Inert storage not directly related to explosives operations, stored in a structure must be sited at IBD (K40-50) from a PES, based on blast only. Minimum fragment distance does not apply.

c. Inert storage that is directly related to explosives operations and inert storage that is not directly related but where access to such inert storage is restricted to only personnel directly related to the explosives mission will be site approved by NOSSA for Navy facilities or MARCORSYSCOM for Marine Corps facilities, based on an evaluation of personnel exposure, the importance of the material in relation to the explosives mission, the operational conditions, and the availability of space. The command responsible for the associated mission must provide a risk acceptance letter to NOSSA/MARCORSYSCOM as part of the site approval request.

7-13.7. ABOVEGROUND TANKS. Large permanent storage facilities are of primary concern when applying ESQD criteria to storage tanks. For installation of smaller tanks, it may be desirable to weigh the cost of distance/protective construction against the strategic value of the stored material, the ease of replacement in the event of an accident, and the potential environmental impact. Reduced distances may be approved if these losses are acceptable and if spill containment is provided so other exposures are not endangered. Small quantities of petroleum products (POL) and other hazardous materials used for operational purposes require no specific separation distance for explosives safety; however, operating procedures must be implemented to limit adverse environmental impacts in the event of an

accidental explosion. Unprotected aboveground storage tanks shall be separated from other PESs at Inhabited Building Distance per table 7-7, column 5, as a minimum and shall be diked. Distances less than those for unprotected tanks may be used when an aboveground storage tank is provided sufficient protection from blast and fragment hazards to prevent rupture or collapse. Where service tanks in sole support of explosives operating areas or lines are supplied by an underground pipe system that is protected from blast and fragments, the tank may be sited at incremented (K40/50) inhabited building distance with a minimum distance of 400 feet from the PES provided that:

a. A dike system is provided according to the requirements in NFPA 30,

b. The service accepts the possible loss of the tanks and any collateral damage that a fire might cause as a result of the tanks being punctured by fragments.

7-13.8. TANKS WHICH SUPPORT A SINGLE PES OR ES. Where service tanks are in support of a single PES or ES, the tanks may be located at the appropriate fire protection distance from any PES as prescribed by UFC 3-460-01 or NFPA 30 requirements and discussed in paragraph 8-4.2.6.4.d.

7-13.9. WATER STORAGE TANKS. When loss of tank is unacceptable, ESQD for unprotected aboveground storage tanks in this category shall meet the siting requirements of table 7-7, column 5. See paragraph 4-3.7.2.4 for firefighting water storage requirements. Buried tanks and associated components of like value shall meet the siting requirements of paragraph 7-13.10. When loss of tank is acceptable, ESQD criteria do not apply to storage tanks and associated components in this category.

7-13.10. UNDERGROUND TANKS OR PIPELINES. Underground tanks or pipelines should be separated from buildings or stacks containing ammunition and explosives of HC/D 1.2 through HC/D 1.4 by a minimum distance of 80 feet. The separation distance for HC/D 1.1 should be at least K3 or a minimum distance of 80 feet unless the donor building is designed to contain the effects of an explosion, in which case no quantity-distance separation is required. Information regarding earth cover required for underground tanks may be found in NFPA 30.

7-13.11. OVERHEAD ELECTRICAL POWERLINES FOR NEW CONSTRUCTION. For lines associated with new construction that also serve other parts of the installation or community. The following separation requirements apply:

a. Electrical distribution lines not exclusively serving explosives areas, carrying less than 69 kV, the towers or poles supporting these lines, and unmanned electrical substations must be no closer to a PES than PTR distances based on overpressure only.

b. Electrical transmission lines not exclusively serving explosives areas, carrying 69 kV or more, and the towers or poles supporting them must be located no closer to PESs than:

(1) Inhabited building distance based on overpressure only if the line in question is part of a grid system serving a large off-base area, and

(2) PTR distances based on overpressure only if loss of the line will not create serious social or economic hardships.

Electric transmission or distribution lines which can be interrupted without loss of power; that is, power is rerouted through other existing lines and/or networks, will be separated from explosives sites in accordance with paragraph 5-10.1.b.

7-13.12. NAVIGABLE WATERWAYS. Navigable waterways as defined in appendix A shall be considered PTRs and subject to the requirements for customary highways of commerce. Occasional use by small fishing and pleasure craft may be ignored.

7-13.13. PARKING AREAS. Parking areas for privately owned vehicles (POV) belonging to personnel employed at or stationed at multiple PESs shall be sited at 100 feet from the PESs to protect PESs from vehicle fires. This distance may be reduced to 50 feet provided PESs are of noncombustible construction, and sufficient measures are in place between the POV parking spaces and PESs to prevent the vehicle from rolling within 50 feet of the PESs (e.g., sloping grade, curbs, vehicle barriers, drainage features). Access for emergency vehicles must be provided. Parking areas for administrative areas shall be located at PTR distance from all PESs (minimum fragment distance shall apply.) The provisions of this paragraph do not negate any applicable security requirements for POVs defined in DoD 5100.76-M (series). At waterfront areas, parking areas may be sited at less than intraline distance to achieve best efficiency and production; however, the 50-foot minimum separation distance must be applied.

7-13.14. LIQUID OXYGEN FACILITIES. Liquid oxygen storage facilities, other than when used for liquid propellant storage, shall be placed a minimum of 50 feet from explosives storage and operating facilities. Liquid propellant storage requirements are discussed in paragraph 7-15.

7-13.15. PAINT AND SOLVENT STORAGE. Paint and solvent storage buildings used for ready storage of paints, lubricating agents, and solvents (including inhibiting solvents) shall be placed a minimum of 50 feet from explosives storage and handling sites, including operating buildings. Ready storage of limited quantities of paint and solvents within operating buildings is permissible. NFPA approved paint lockers/containers shall be used for such storage as discussed in paragraph 8-4.3.2.

7-13.16. UTILITIES AND SERVICES. Utilities include steam, water, natural gas, POL, sewage, air, electrical, and communication lines; and environmental facilities or equipment. The term “utility” does not apply to services provided to individual or grouped explosives facilities when that service is not also secondarily provided to other parts of the installation or community. The following requirements apply to utilities:

7-13.16.1. Do not locate utilities that provide vital functions to a major portion of an installation closer to PESs than IBD.

7-13.16.2. Site underground electrical and communications lines at K3 for HC/D 1.1 with no minimum distance required. Other underground utilities will meet the siting requirements of paragraph 7-13.10.

7-13.16.3. Do not locate overhead electric service lines (running past an explosives facility, but not serving it) closer to a combustible explosives facility or to an open explosives facility than the length of the electric lines between the nearest service poles and the length of the nearest service pole. An exception is when an effective means (e.g., line spacers, weights, etc.) is provided to ensure that energized lines on breaking cannot come into contact with the facility or its appurtenances. No separation is required for non-combustible facilities. See paragraph 7-13.11. for lines associated with new construction that secondarily serve other parts of the installation or community.

7-13.16.4. Locate manned auxiliary services, including auxiliary power plants, compressor stations, electric power transformers, and boiler houses, at intraline distance from PESs they support.

7-13.16.5. Locate unmanned auxiliary services (e.g., transformer stations, water treatment and pollution abatement facilities) that serve an explosives area, but are not an integral function in the

explosives area, and that would not create an immediate secondary hazard if lost, at barricaded intraline distance from the PESs they support, even though such services need not be barricaded.

7-13.16.6. Locate unmanned auxiliary service power generation or conversion facilities (e.g., power plants, transformers, etc.) that exclusively supply power to an explosives area or security fence lighting at fire protection distance (50 feet for non-combustible ES structures, 100 feet for combustible ES structures) from all PESs in the supported explosives area.

7-13.16.7. Locate unmanned aboveground utility services (e.g., water treatment, pollution abatement facilities, water pump stations, sewage lift stations, etc.) that do not serve an explosives area or an entire base complex, and when loss will not cause an immediate loss of a vital function at inhabited building distance with no minimum fragment distance.

7-13.16.8. The term “utility” does not apply to services provided to individual or grouped explosives facilities when such services are not also provided to other parts of the installation or community. If a service does not extend beyond the explosives area, it is not considered a “utility” for QD purposes and may be sited without regard to ESQD requirements.

7-13.17. CHANGE HOUSE. The change house shall contain facilities for bathing, clothes changing for both men and women, lunch rooms for all employees, and may house the plant officer. The change house shall be located at an unbarricaded (K18) intraline distance from the nearest building containing explosives based on the quantity and type of explosives allowed in that building, unless it is part of an operating line and used exclusively by personnel employed in that line, in which case it can be located at barricaded (K9) intraline distance. See paragraphs 7-9.1 and 7-9.2.

7-13.18. INTERSERVICE SUPPORT AND TACTICAL FACILITIES. Appropriate safety distances provided in paragraphs 7-13.18.1 and 7-13.18.2 shall be applied between facilities of one military service and those of another service regardless of the location of the boundary between the two installations. The safety criteria based on toxicity, noise, thermal radiation, flight trajectory, fragmentation and incendiary or other hazards are greater than explosives safety distance criteria, the criteria based on the predominant hazard should be considered. The following ESQD relationships shall apply to the separation of facilities of two services, neither of which is a tenant of the other.

7-13.18.1. Explosives storage facilities of one service shall be separated from explosives storage facilities of another service, as a minimum, by the appropriate intermagazine distance.

7-13.18.2. Explosives storage or operating locations of one service shall be separated from explosives operating locations or tactical facilities of another service by the appropriate inhabited building distance. When operations in each facility present a similar degree of hazard or for joint or support operations, this separation may be reduced to the appropriate intraline distance, as though both facilities belonged to a single service.

7-13.19. INSTALLATION BOUNDARIES. Installation boundaries will be treated as inhabited buildings respective of siting criteria unless land outside the boundary is unsuitable for construction or is government controlled land not open to the public. In such cases, inhabited building ESQD arcs may

penetrate the boundary. Certification of such encumbrances must be obtained through the site approval process as defined in paragraph 8-1.2.

7-13.20. NON-DOW EXPLOSIVES OPERATIONS. Non-DoW explosives operations and storage sites shall be separated from other non-DoW and DoW sites according to table 7-30 or table 7-31 and in accordance with paragraph 8-1.2.7.

7-13.21. RENEWABLE ENERGY SOURCE GENERATION. Equipment installed for the purpose of providing renewable energy, such as wind turbines and solar panel farms must be located beyond PTR distance. Such equipment must have a full electromagnetic radiation (EMR) assessment conducted in field conditions and a comprehensive determination of the EMR environment it generates to fully assess if these sources cause a potential hazard to ordnance operations and related facilities. Siting requests for these facilities must identify the energy customer and the equipment owner (that is, Navy, commercial power company), and include a letter of risk acceptance from the owner for potential damage to equipment and power disruption in the event of an explosive accident. Associated power lines must meet the requirements of paragraph 5-10 and associated inhabited structures must be sited beyond IBD. This does not preclude the use of individual solar generated power units for lighting or security systems and energy reduction systems within ordnance areas, provided grounding and bonding is installed in accordance with chapters 5 and 6 and explosives safety site approvals are obtained.

7-13.22. AGRICULTURAL AND LAND USE AREAS. Agricultural areas must be separated from PESs by PTRD based on airblast overpressure only. Agricultural areas separated at less than PTRD may be approved by NOSSA/MARCORSYSCOM on a case-by-case basis, provided access by personnel associated with the agricultural operation is kept to a minimum and adequate compensatory measures are in place.

7-14. ESQD REQUIREMENTS FOR UNDERGROUND STORAGE.

7-14.1. GENERAL. This section details ESQD standards for the underground storage of military ammunition and explosives. Underground storage includes natural caverns and below grade, excavated chambers, but criteria of this section also apply to any storage facility providing the overpressure confinement effects typically encountered in underground storage. Use criteria of this section only when the minimum distance from the perimeter of a storage area to an exterior surface exceeds 0.25 $W^{1/3}$ otherwise use aboveground siting criteria. This minimum distance most often, but not always, equals the thickness of the earth cover. This section addresses explosives safety criteria both with and without rupture of the earth cover.

7-14.1.1. Expected ground shock, debris, and airblast hazards from an accidental explosion in an underground storage facility depend on several variables, including the local geology and site specific parameters. These parameters vary significantly from facility to facility, so criteria listed here will likely be safety conservative for some geology's and configurations. Siting distances other than those listed may be used when validated by approved experimental or analytical results showing equivalent protection to that required. Default approved methods for establishing ESQD are discussed below.

7-14.1.2. ESQD siting requirements of this section may be determined from applicable equations or by interpolating between the Table and figure entries.

7-14.1.3. The provisions of this section do not apply to storage in earth-covered magazines built above grade.

7-14.2. DESIGN OF UNDERGROUND STORAGE FACILITIES. Underground storage facilities may consist of a single chamber or a series of connected chambers. There may also be other protective construction features in the facility. The chamber(s) may be either excavated or natural geological cavities. Figure 7-4 illustrates general concepts for several possible configurations of underground facilities.

7-14.2.1. Design of new underground storage facilities must take into account site conditions, storage requirements and operational needs. Once these are established, a design may be developed based on Corps of Engineers definitive drawing number DEF 421-80-04.

7-14.2.2. An underground storage site normally requires designed protection against lightning only for exposed or partially exposed parts. Metal and structural parts of the site that have less than 2 feet (60 cm) of earth cover shall be protected as for an aboveground site. Lightning protection requirements must be considered on a site specific basis.

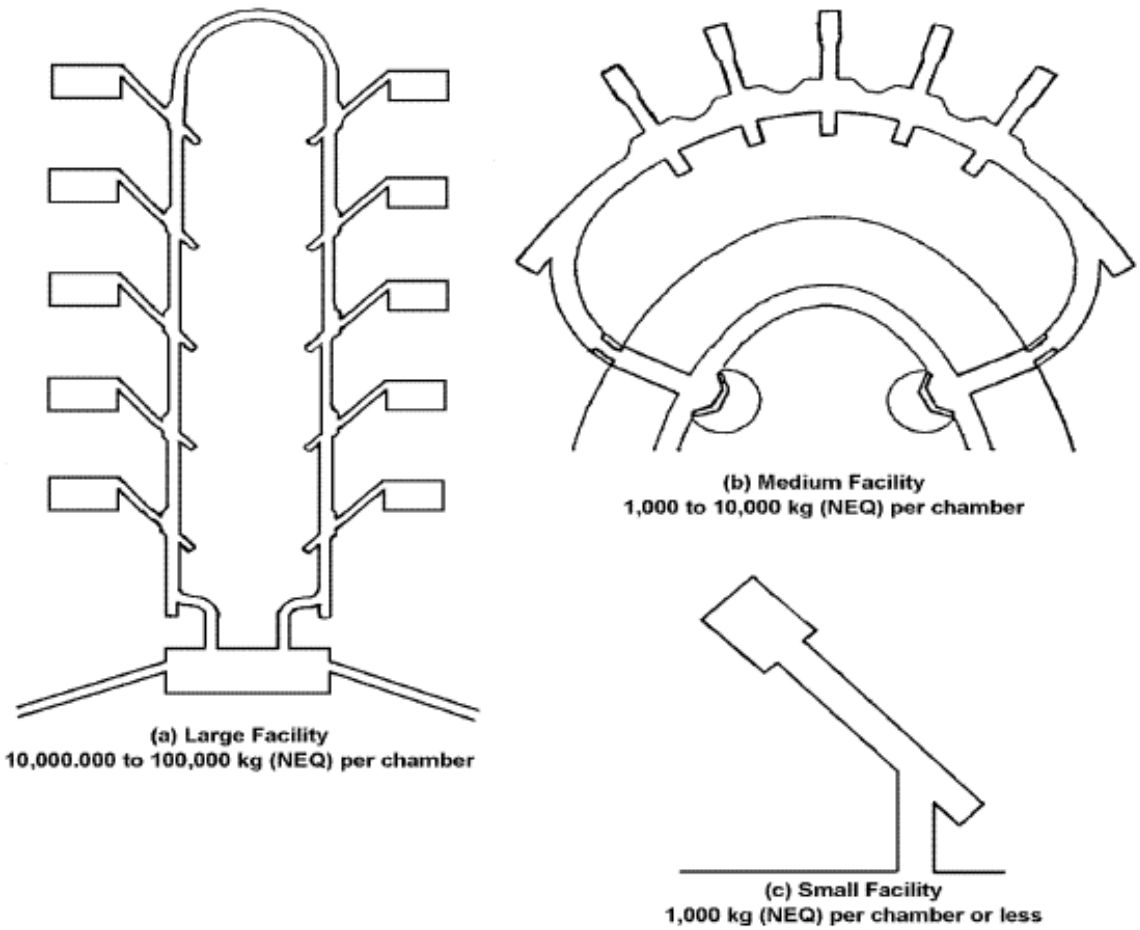

Figure 7-4. Typical Underground Facilities

7-14.3. EXPLOSION EFFECTS IN UNDERGROUND STORAGE SITES. Confinement caused by the very limited space in underground storage will cause very high pressures of prolonged duration from an accidental explosion. Blast waves and dynamic flow fields will travel at high velocity throughout the

underground facility. Ground shocks will be produced, and break-up of the earth cover with attendant debris throw may occur

7-14.3.1. Under conditions of heavy confinement and high loading density HC/D 1.3 material may, while either detonating or burning, produce intense gas pressures sufficient to rupture the earth-cover and create a significant debris hazard.

7-14.3.2. An accidental explosion involving only HC/D 1.2 material will likely start a fire that is sustained by burning packages and other ammunition. This may cause further explosions that become more frequent as the fires build and multiply until everything in the site is destroyed. Results of these repeated explosions will depend on the type and quantity of munitions, the type of explosion produced, and the layout of the facility. Hazards created outside the underground facility will likely not be as severe as those produced by HC/D 1.1 or 1.3 material.

7-14.4. PROTECTION PROVIDED. ESQD criteria listed here provide separation distances from stored ammunition and explosives to mitigate the hazards caused by ground shock, debris, or air blast. The required distance for a given quantity and storage condition is that corresponding to the dominant (farthest-reaching) hazard that is applicable to the exposure under consideration. It is therefore the largest of the distances determined to be necessary for protection against the individual effects considered in turn.

7-14.5. CHAMBER SEPARATION REQUIREMENTS. Minimum storage chamber separation distances are required to prevent or control the communication of explosions or fires between donor and acceptor chambers. There are three modes by which an explosion or fire can be communicated: by rock spall, by propagation through cracks or fissures, and by airblast or thermal effects traveling through connecting passages.

7-14.5.1. Prevention of Damage Rock Spall (HC/D 1.1 and 1.3). The chamber separation distance is the shortest distance (rock thickness) between two chambers. When an explosion occurs in a donor chamber, a shock wave is transmitted through the surrounding rock. The intensity of the shock decreases with distance. For small chamber separation distances, the shock may be strong enough to produce spalling of the rock walls of acceptor chamber. Spalled rock of sufficient mass, traveling with a sufficient velocity, may damage or sympathetically detonate impacted munitions in the acceptor chambers. When no specific protective construction is used, the minimum chamber separation distance, D_{cd} required to prevent hazardous spall effects is:

$$D_{cd} = 2.5 \cdot W^{1/3}$$

Where D_{cd} is in feet and W is in pounds. D_{cd}, in no case, shall be less than 15 feet.

The separation distances defined above applies to chamber loading densities up to 3.0 pounds per cubic foot, as determined from table 7-32 and moderate to strong rock types. This loading density is the basis for values of Dcd listed in table 7-33. For greater loading densities in moderate to strong rock, the required separation distance is:

$$D_{cd} = 5.0 \cdot W^{1/3}$$

For weak rock, at all loading densities the separation distance is:

$$D_{cd} = 3.5 \cdot W^{1/3}$$

7-14.5.2. Prevention of Propagation by Rock Spall (HC/D 1.1 and 1.3). If damage to stored munitions in the adjacent chambers is acceptable, the chamber separation distance can be reduced to the distance required to prevent propagation of the detonation by the impact of rock spall against the munitions. This is considered an immediate mode of propagation because time separations between donor and acceptor explosions may not be sufficient to prevent coalescence of blastwaves. Unless analyses or experiments indicate otherwise, explosives weights subject to this mode must be added to other donor explosives weights to determine NEW. When no special protective construction is used, the separation distance, D_{cp}, to prevent explosion communication by spalled rock is:

$$D_{cp} = 1.5 \cdot W^{1/3}$$

Where D_{cp} is in feet and W is in pounds

When the acceptor chamber has protective construction to prevent spall and collapse (into the acceptor chamber) the separation distance to prevent propagation by impact of spalled rock is:

$$D_{cp} = 0.75 \cdot W^{1/3}$$

D_{cp} is in feet and W is the weight in pounds of HC/D 1.1 and 1.3 material in the donor chamber. Separation distances D_{cp} and D_{cd}, are listed in table 7-33. These distances are based on an explosive loading density of about 17 lb/ft3. The distances will likely be safety conservative for lower loading densities by the effects have not been quantified.

7-14.5.3. Prevention of Propagation through Cracks and Fissures (HC/D 1.1 and 1.3). Propagation between a donor and acceptor chamber has been observed to occur when natural, near horizontal jointing planes, cracks or fissures in the rock between the chambers are opened by the lifting force of the detonation pressure in the donor chamber. Prior to construction of a multichamber magazine, a careful site investigation must be made to ensure that such joints or fissures do not extend from one chamber location to an adjacent one. Should such defects be encountered during facility excavation, a reevaluation of the intended siting will be required.

7-14.5.4. Prevention of Propagation through Passageways (HC/D 1.1 and 1.3). Flame and hot gas may cause delayed propagation. Time separations between the original donor event and the potential explosions of this mode will likely be sufficient to prevent coalescence of blastwaves. Consequently, for purposes of ESQD siting, only the maximum credible explosives weight need be used to determine NEW. In order to protect assets, blast and fire resistant doors must be installed within multi-chambered facilities. Evaluations for required chamber separations due to this communication mode should be made on a site specific basis using procedures outlined in Corps of Engineers definitive drawing DEF 421-80-04.

7-14.5.5. For HC/D 1.1 and 1.3 materials, chamber entrances at the ground surface, or entrances to branch tunnels off the same side of a main passageway, shall be separated by at least 15 feet (5 meters). Entrances to branch tunnels off opposite sides of a main passageway shall be separated by a least twice the width of the main passageway.

7-14.5.6. Chambers containing only HC/D 1.2 and 1.4 material, and separated by the appropriate distance listed above, may be used to the limits of their physical capacities except for storage of any items having special stacking and NEW restrictions.

7-14.6. CRITICAL CHAMBER COVER THICKNESS. The chamber cover thickness is the shortest distance between the natural rock surface at the chamber ceiling (or in some cases, a chamber wall)

and the ground surface. The critical cover thickness required to prevent breaching of the chamber cover by a detonation is $2.5.W^{1/3}$ for all types of rock.

7-14.7. EXTERNAL ESQD DETERMINATIONS.

7-14.7.1. HC/D Material Dependence.

7-14.7.1.1. HC/D 1.1 and 1.3 Materials. Distances shall be determined from the total quantity of explosives, propellants, pyrotechnics, and incendiary materials in the individual chambers, unless the total quantity is subdivided to prevent rapid communication of an incident from one subdivision to another. All HC/D 1.1 and/or 1.3 material subject to involvement in a single incident shall be assumed to contribute to the explosion yield as would an equal weight of TNT. Any significant and validated differences in energy release per unit mass of the compositions involved from that of TNT may be considered. A connected chamber storage or cavern storage site that contains material of HC/D 1.1 or 1.3 will be treated as a single-chamber site unless explosion communication is prevented by adequate subdivision or chamber separation.

7-14.7.1.2. HC/D 1.2 Materials. Except for primary fragments from openings to underground storage, external explosives safety hazards are not normally significant for HC/D 1.2 materials. The safe distance for Inhabited Building Distance and PTR is the Inhabited Distance in tables 7-15 through 7-18 for locations within +10 degrees of the centerline of a tunnel opening. These default criteria apply only to those detonations which occur where a line-of-sight path exists from the detonation point to any portion of the tunnel opening. For detonations which do not have a line-of-sight path to the tunnel opening, or where the line-of-sight path is intercepted by a barricade beyond the opening, the Inhabited Building Distance and PTR hazard distances are zero.

7-14.7.1.3. HC/D 1.4 Materials. External explosives safety hazards are not normally significant for HC/D 1.4 materials. Accordingly, external ESQD criteria do not apply for HC/D 1.4 materials.

7-14.7.2. ESQD Reference Points.

7-14.7.2.1. Distances determined by blast or debris issuing from tunnel openings shall be the minimum distance measured from the openings to the nearest wall or point of the location to be protected. Use extended centerlines of the main openings as reference lines for directional effects.

7-14.7.2.2. Distances determined for airblast and debris produced by breaching of the chamber cover shall be the minimum distance from an exterior point defined by chamber cover thickness, on the ground surface above the storage chamber to the nearest wall or point of the location to be protected. For configurations where the storage chambers are not distinct from the access tunnel, the distance is the shortest distance from the tunnel roof directly above the charge to the surface.

7-14.7.2.3. Distances determined for ground shock shall be the minimum distance measured from the nearest wall of the storage chamber to the location to be protected.

7-14.7.3. Inhabited Building Distance (HC/D 1.1 and 1.3 Materials). The inhabited building distance shall be the largest distance required for protection against ground shock, air blast, or debris as defined below.

7-14.7.3.1. Ground Shock. For protection of residential buildings against significant structural damage caused by ground shock, the maximum particle velocity induced in the ground at the building site may not exceed the following values, which form the basis for the equations in paragraph 7-14.7.3.2, below:

a. 2.4 ips in soil.

b. 4.5 ips in weak rock.

c. 9.0 ips in strong rock.

For sitings in moderately-strong to strong rock with chamber loading densities of 3.0 lbs/ft^3 (50kg/m^3) or less, the IBD for ground shock, D_{ig} is:

$$D_{ig} = 5.8 \cdot W^{1/3}$$

Where D_{ig} is in feet and W is the explosive quantity in pounds. For higher loading densities in chambers sited in moderately strong to strong rock and for all loading densities in other materials, the Inhabited Building Distance for ground shock is:

(1) $D_{ig}=12.5 \cdot f_g \cdot W^{4/9}$ (Moderately strong to strong rock).

(2) $D_{ig}=11.1 \cdot f_g \cdot W^{4/9}$ (Weak rock).

(3) $D_{ig}=2.1 \cdot f_g \cdot W^{4/9}$ (Soil)

Values of D_{ig}/f_g are shown in table 7-33. The dimensionless, decoupling factor, f_g depends on chamber loading density, w, and is:

$$f_g=(4/15) \cdot w^{0.3}$$

Values of f_g are shown in table 7-34. Chamber loading density is the NEW (in pounds) divided by the volume of the storage chamber, V_c (in cubic feet). Alternate values for D_{ig} may be used only when justified by site specific ground shock data.

7-14.7.3.2. Debris.

7-14.7.3.2.1 Openings. A minimum IBD distance of 1800 feet (550 meters) for debris throw from an opening will apply within +10 degrees to either side of the centerline axis of that opening unless positive means are used to prevent or control the debris throw. Special features may be incorporated in the design of underground facilities to reduce the IBD for debris ejected through tunnel openings.

a. Debris Traps are pockets excavated in the rock at or beyond the end of sections of tunnel, designed to catch debris from a storage chamber detonation. Debris traps should be at least 20% wider and 10% taller than the tunnel leading to the trap, with a depth (measured along the shortest wall) of at least one tunnel diameter.

b. Expansion chambers are very effective in entrapping debris, as long as the tunnels entering and exiting the chambers are either offset in axial alignment by at least two tunnel widths, or enter and exit the chambers in directions that differ by at least 45 degrees.

c. Portal Barricades provide a means of reducing IBD from debris by obstructing the path of the debris as it exits the tunnel. Construction and location requirements for barricades are contained in paragraph 7-14.8.

d. High-pressure Closures are large blocks constructed of concrete or other materials that can obstruct or greatly reduce the flow of blast effects and debris from an explosion, from or into a storage chamber. For chamber loading densities of about 0.625lb/ft^3 or above, closure blocks will contain 40% or more of the explosion debris within the detonation chamber, provided that the block is designed to remain intact. If a closure block fails under the blast load, it will produce a volume of debris in addition to that from the chamber itself. However, since the block's mass and inertia are sufficient to greatly reduce the velocity of the primary debris, the effectiveness of other debris-mitigating features, such as debris traps, expansion chambers, and barricades is increased.

7-14.7.3.2.2 Surface Breaches. Distances required for protection of inhabited areas against the effects of debris D_{id} thrown from breaching of the cover material over a detonation depend on the thickness of the cover over the storage chamber. Siting criteria for debris from a surface breach need to be considered for chamber cover thickness greater than the critical value, C_c, of $2.5W^{1/3}$. If the cover thickness is less than C_c, the distance, D_{id}, will be calculated from $D_{id}=f_d \times f_c \times W_{0.41}$, where $f_d=0.6 \times w^{0.18}$, and f_c is a constant related to the type of rock around the storage chamber. Values of D_{id}/f_d, for moderately strong to strong rock and for weak rock, are listed in tables 7-35 and 7-36. Values of f_c are shown graphically in figure 7-5, values for the decoupling factors f_g and f_d are listed in table 7-34.

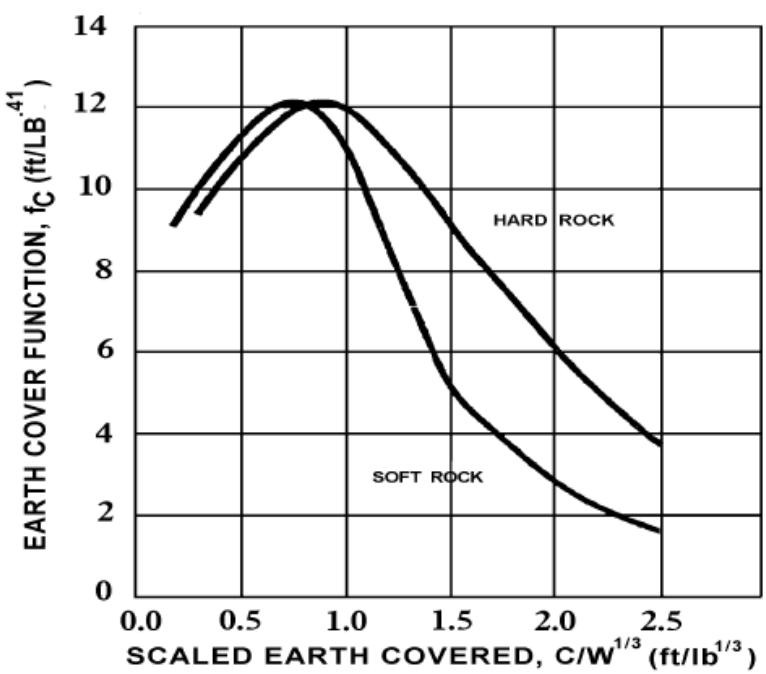

Figure 7-5. Debris Dispersal Functions

Debris traps, and expansion chambers intended to entrap debris, must be designed to contain the full potential volume of debris, based on the maximum capacity of the largest storage chamber. Design specifications for debris traps, expansion chambers, closure blocks and portal barricades are given in

Corps of Engineers definitive drawing number DEF 421-80-04. Use of barricades in conjunction with any other of these features will lower the debris hazard to a level where ESQD considerations for debris will not be required.

7-14.7.3.3. Airblast.

a. An explosion in an underground storage chamber may produce external airblast from two sources; the exit of blast from existing openings (tunnel entrances, ventilation shafts, etc.) and the rupture or breach of the chamber cover by the detonation. Required IBD are to be independently determined for each of these airblast sources, with the maximum IBD used for siting. If the chamber cover thickness is less than the critical thickness, C_c, given in paragraph 7-14.6, above, some amount of external airblast will be produced, depending on the cover thickness. Use the following procedure to find IBD for airblast produced by breaching of the chamber cover:

$C<0.25 \cdot W^{1/3}$:	Use Inhabited Building Distance for surface burst of bare explosives charge (table 7-7, note 3)
$0.25 \cdot W^{1/3} < C < 0.50 \cdot W^{1/3}$:	Use ½ of Inhabited Building Distance for surface burst of bare explosives charge
$0.50 \cdot W_{1/3} < C < 0.75 \cdot W^{1/3}$:	Use ¼ Inhabited Building Distance for surface burst of bare explosives charge
$0.75 \cdot W^{1/3} < C$:	Airblast hazards from blast through the earth cover are negligible relative to ground shock or debris hazards

b. Overpressure and debris hazards must be determined for each facility opening whose cross-section area is 5% or more of that of the largest opening.

c. Distance vs overpressure along the centerline axis of a single opening is:

$$R=149.3.D.[(W/V_E)^{0.5}/P_{so}]1/1.4 \qquad \text{(Equation A)}$$

Where:

R: Distance from opening (feet),

D: Effective hydraulic diameter that controls dynamic flow issuing from the opening (feet) [Compute D, using the minimum, cross-sectional area of the tunnel (A) that is located within five diameters of the opening, as D=4.A/P, where A is the area and P is the perimeter],

P_{SO}: Overpressure at distance R (psi),

W: Maximum credible event (MCE) in pounds,

V_E: Total volume engulfed by the blast wavefront within the tunnel system at the time the wavefront arrives at the point of interest (ft^3)

d. Distance vs overpressure off the centerline axis of the opening is:

$$R(\Theta) = R(\Theta=0)/(1+(\Theta/56)^2)^{1/1.4} \qquad \text{(Equation B)}$$

Where:

$R(\Theta=0)$ is the distance along the centerline axis, and Θ is the horizontal angle from the centerline (degrees).

e. Equations A and B show that the distance providing protection from an overpressure exceeding P_{so} depends on the hydraulic diameter, and the angle from centerline axis for the location of interest. Figure 7-6 shows the ratio of off-axis to on-axis distances.

f. Find required IBD for airblast using the appropriate equations discussed above, with the criteria that the total incident overpressure at IBD shall not exceed:

P_{so} = 1.2psi for W < 100,000 lbs (Equation C)

$P_{so} = 44.57.W^{-0.314}$psi for 100,000 £ W £ 250,000 lbs (Equation D)

P_{so} = 0.9psi for W > 250,000lbs (Equation E)

g. For the overpressures of Equations C to E, on-axis IBD are:

R = 131.1 D (W/VE)1/2 8 for W < 100,000 lbs (Equation F)

R = 9.91-D-W0-581/VE0 357 for 100,000 W <250,000 lbs (Equation G)

R = 161.0-D- (W/VE) 1/2-8 for W > 250,000 lbs (Equation H)

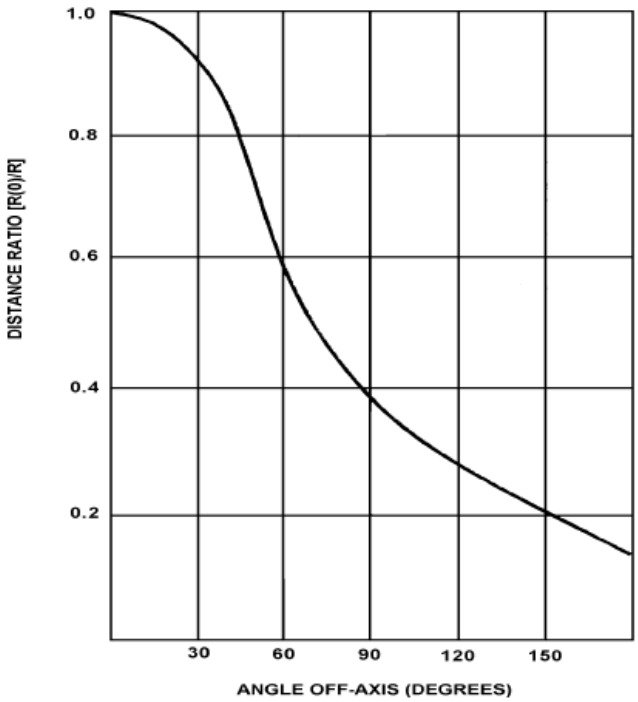

Figure 7-6. Constant Pressure Contour

h. ESQD distances for IBD for airblast may be determined from the equations listed above or from entries in table 7-37 and table 7-38.

7-14.7.3.4. Airblast Mitigation Methods for Reducing Inhabited Building Distance. Special features that may be incorporated in underground storage facilities to reduce the airblast IBD include:

a. Facility layouts. A single-chamber facility with a straight access tunnel leading from the chamber to the portal is commonly called a “shotgun” magazine because the blast and debris are channeled to the external area as if fired from a long-barreled gun. More complex facility layouts will provide some reductions in the exit pressures due to reflections of the explosive shock against the tunnel walls. The cumulative effect is to reduce the overpressure at the shock front to the point that the peak overpressure is produced by the detonation gas flow following the front. The detonation gas pressure decreases as the volume it occupies increases. Therefore, the peak overpressure produced at the tunnel opening will also decrease with an increase in the total volume of the tunnels and chambers that can be filled by the blast as it travels from the detonation source (for example, a storage chamber) to the opening, as given in the previous section. Larger facilities will, therefore, produce greater reductions in the effective overpressure at the opening, which will, in turn, reduce the IBD. The IBD should be reduced by 10% when two or more openings of similar cross-sectional area exist.

b. Expansion chambers. Expansion chambers are so-named because of the volume they provide for the expansion of the detonation gases behind the shock front as it enters the chamber from a connecting tunnel. Some additional degradation of the peak pressure at the shock front occurs as the front expands into the chamber and reflects from the walls. The principal benefit provided by an expansion chamber, however, is simply the added volume which decreases pressures. Expansion chambers also have practical purposes. They may be used as loading/unloading chambers, providing

weather protection for the transfer of munitions from trucks to materials handling equipment prior to placement in storage chambers, or as turnaround areas for transport vehicles servicing facilities through a single entry passage.

c. Constrictions. Constrictions are short lengths of tunnel whose cross sectional areas are reduced to one-half or less the normal tunnel cross section. The use of constrictions should be limited to locations within 5 tunnel diameters of the tunnel exit or to the entrances of storage chambers. A constriction near the tunnel exit, where the overpressure has dropped near a minimum value in the tunnel, defines the hydraulic diameter to be used in Equation A. The purpose of a constriction at a chamber entrance is to reduce the intrusion of airblast and thermal effects into the chamber from a detonation in an adjacent chamber. A constricted chamber entrance also reduces the area, and hence the total loading on a blast door installed to protect the chamber contents.

d. Portal barricades. For most underground storage facilities, the airblast from a storage chamber detonation that exits a tunnel portal will be in the form of a shock wave. It will expand in all directions from the portal in a manner similar to that from a detonation at the portal. A barricade in front of the portal will reflect that portion of the shock wave moving directly outward from the portal. By reflecting this portion of the total airblast, the pressures along the extended tunnel axis are reduced, and the pressures in the opposite direction, behind the portal are increased. The result is a more circular IBD area centered at the portal. Since much of the blast is also reflected upward, the total IBD area is less than would occur without a barricade. For cases where the blast must travel a large distance from the storage chamber to the portal, with several changes in direction along the travel path, the airblast exiting the portal may primarily consist of a strong, highly-directional gas flow. A barricade will intercept such a flow and deflect it in directions 90 degrees from the tunnel axis. Whether the blast exiting the portal is shock or gas flow-dominated, the barricade must be located within certain minimum and maximum standoff distances to be effective. For the barricade design recommended in paragraph 8-2.5.7, these limits are one to three tunnel diameters (at the portal). Portal barricades reduce the IBD along the extended tunnel axis by 50%. The total IBD area is only slightly reduced, but will change to a circular area, half of which is behind the portal. The barricade should be constructed as described in paragraph 8-2.5.7 and Corps of Engineers definitive drawing number DEF 421-80-04.

e. High-pressure closures.

(1) High Pressure Closures are large blocks constructed of concrete or other materials, that can obstruct or greatly reduce the flow of blast effects and debris from an explosion, from or into a storage chamber. If used to provide complete protection to the contents of a chamber from an explosion in another chamber, the block must be designed to move from a normally-closed position to an open position to allow entry into the chamber. Blast doors are not required for this type of closure block. If used to reduce ESQD by restricting the blast outflow from a chamber, the block must be designed to be rapidly driven from an open to a closed position by the detonation pressures in the chamber. While this type of block will provide some protection of chamber contents from an explosion in another chamber, blast doors must also be used to provide complete protection. Tests have shown that a closure block with sufficient mass can obstruct the initial outflow of airblast from an explosion in a chamber to reduce pressures in the connecting tunnels by a factor of two or more, even when the block is destroyed. Blocks with sufficient strength to remain structurally intact can provide greater reductions. Since many variables influence the performance of a closing device, their design details must be developed on a site-specific basis.

(2) A 50% reduction is IBD should be applied to a high pressure closure block provided that the block is designed to remain intact in the event of an explosion. This reduction is applicable for loading

densities of 0.625 lb/ft3 or higher. For loading densities lower than 0.625 lb/ft3, reductions may be calculated by the formula:

$$y(\%)=50^{\bullet}1Og10(16.02^{\bullet}w)$$

where y is the percentage of reduction in IBD, and w is loading density in lb/ft3. Closure block design criteria are found in Corps of Engineers definitive design drawing number DEF 421-80-04.

7-14.7.4. Public Traffic Route distance (HC/D 1.1 and 1.3 Materials)

7-14.7.4.1. Ground Shock. ESQD is 60% of IBD for ground shock.

7-14.7.4.2. Debris. ESQD is 60% of IBD for debris.

7-14.7.4.3. Airblast. ESQD is 60% of IBD for airblast.

7-14.7.5. Intraline Distance (HC/D 1.1 and 1.3 Materials)

7-14.7.5.1. Ground Shock. ESQD criteria for ground shock do not apply.

7-14.7.5.2. Debris. For locations within +10 degrees of the centerline of a tunnel opening, site intraline facilities at IBD for debris issuing from the opening, calculated as directed in paragraph 7-14.7.3.3, above. ESQD criteria for debris are not applicable for locations greater than +10 degrees from the centerline axis of an opening.

7-14.7.5.3. Airblast. Overpressure at barricaded and unbarricaded intraline distances shall not exceed 12 and 3.5 psi, respectively.

7-14.7.6. Distance to Aboveground Magazines (HC/D 1.1 and 1.3 Materials).

7-14.7.6.1. Ground Shock. ESQD criteria for ground shock do not apply.

7-14.7.6.2. Debris. For locations within 10 degrees of either side of the centerline of an opening, site aboveground magazines at IBD (see paragraph 7-14.7.3.2). QD criteria for debris from rupture of the chamber cover are not applicable.

7-14.7.6.3. Airblast. Overpressure at barricaded and unbarricaded above ground magazine distance shall not exceed 27 psi and 8 psi, respectively.

7-14.7.7. Distance to Earth-Covered Aboveground Magazines (HC/D 1.1 and 1.3 Materials).

7-14.7.7.1. Ground Shock. ESQD criteria for ground shock do not apply.

7-14.7.7.2. Debris. ESQD criteria for debris from rupture of the chamber cover do not apply. ESQD criteria for debris issuing from an opening do not apply if the magazine is oriented for side on or rear-on exposures to the debris but the criteria do apply for frontal exposures. Site earth-covered magazines that are located within +10 degrees of the centerline of an opening and oriented for a frontal debris exposure at IBD for that debris hazard calculated as directed in paragraph 7-14.7.3.3, above.

7-14.7.7.3. Airblast. These sitings are based on the strength of the earth-covered magazine and use side-on overpressures calculated from Equations A and B.

a. Head-on exposure.

(1) 7-Bar earth-covered magazine: Site where the side-on overpressure, P_{so}, is 29 psi.

(2) 3-Bar earth-covered magazine: Site where the side-on overpressure, P_{so}, is 16 psi.

(3) Undefined earth-covered magazine: Site where the side-on overpressure, P_{so}, is 3.5 psi.

b. Other than head-on exposure. Site all earth-covered magazines where side-on overpressure, P_{so}, is 45 psi.

7-14.8. PORTAL BARRICADES FOR UNDERGROUND MAGAZINES.

7-14.8.1. Portal barricades for underground magazines are located immediately in front of an outside entrance or exit (that is, the portal) to a tunnel leading to an explosives storage point. The portal barricade should be centered on the extend axis of the tunnel that passes through the portal. Specific design criteria for a portal barricade are given in Corps of Engineers definitive drawing number DEF 421-80-04. The remaining narrative of this paragraph is given for conceptual guidance. For maximum effectiveness, the front face (that is, the face toward the portal) of the barricade must be vertical and concave in plan, consisting of a central face oriented perpendicular to the tunnel axis, and wingwalls as shown in figure 7-7. The width of the central face typically equals the width of the tunnel at the portal. The wingwalls must be of sufficient width so that the entire barricade length intercepts an angle of ten degrees (minimum) to the right and left of the extended tunnel width. Likewise, the height of the barricade along its entire width must be sufficient to intercept an angle of ten degrees above the extended height of the tunnel.

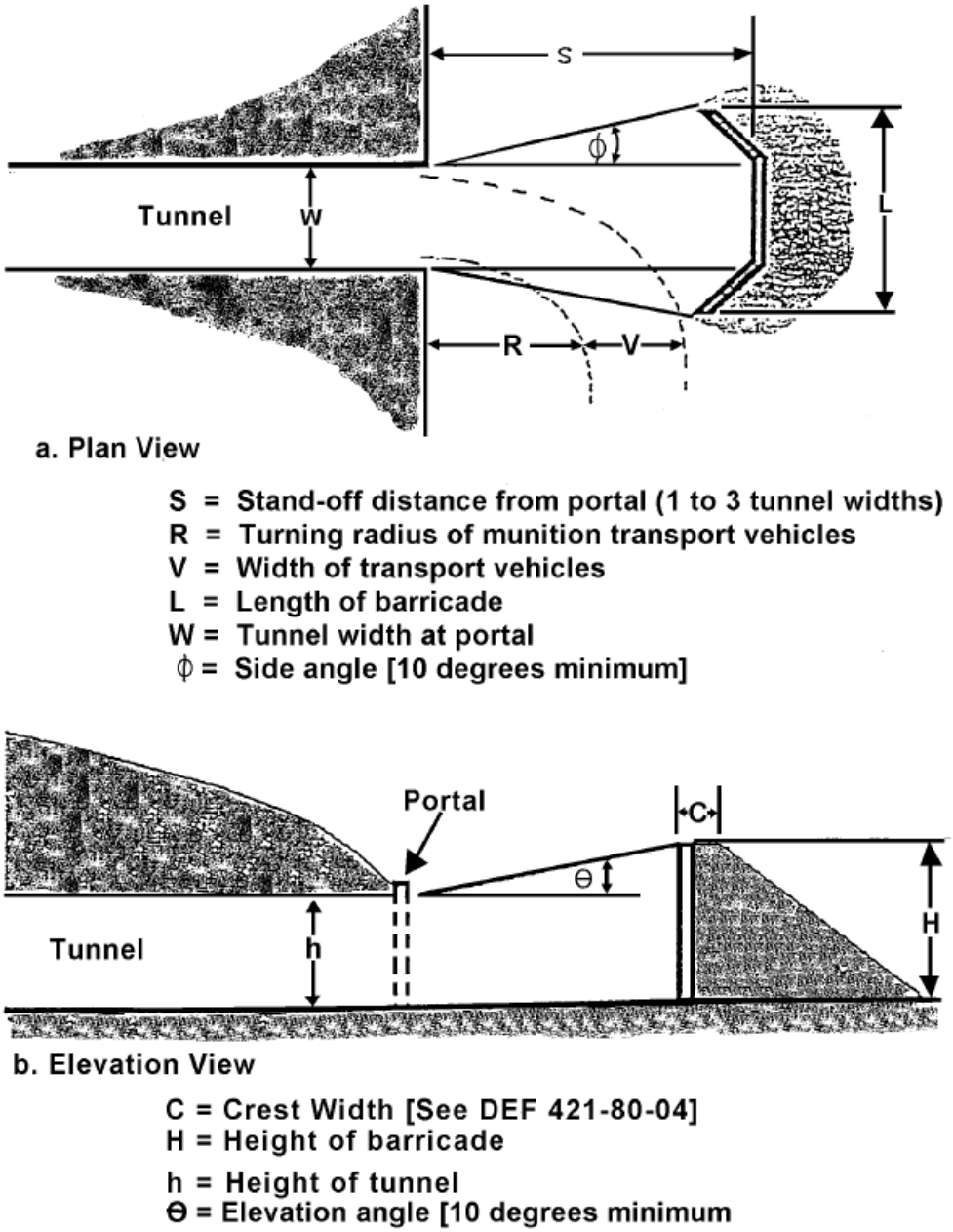

Figure 7-7. Portal Barricade Location, Height and Length

7-14.8.2. Portal barricades for underground magazines must be located a distance of not less than one and not more than three tunnel widths from the portal. The actual distance should be no greater than that required to allow passage of any vehicles or materials handling equipment that may need to enter the tunnel. As shown in figure 7-7, this distance is based on the turning radius and operating width required for the vehicles or equipment.

7-14.8.3. To withstand the impact of debris ejected from the tunnel; the front face of the portal barricade (including wingwalls) must be constructed as a wall of reinforced concrete, with a minimum thickness equal to 10% of the barricade height, but in no case less than 12 inches. The concrete wall

must have a spread footing of sufficient width to prevent significant settlement, and the central wall, wingwalls, and footing must be structurally tied together to provide stability. The backfill behind the concrete wall may be composed of any fill material, including rock rubble from the tunnel excavation, with a maximum particle size of six inches within the area extending out to three feet from the rear face of the wall.

7-15. ESQD REQUIREMENTS FOR ENERGETIC LIQUIDS.

7-15.1. INTRODUCTION. The ESQD criteria established for energetic liquids are minimum requirements and do not restrict or preclude the use of greater distances or precautions. When minimum requirements are not met, reasonable efforts shall be made to limit the quantity of energetic liquids to the minimum needed for operational requirements. When additional hazards from ammunition or explosives are involved, the safety regulations specified for these hazards shall be used and applied in conjunction with these minimum requirements.

7-15.2. APPLICABILITY. This section applies to the storage of energetic liquids (listed in table 7-5) in all containers, including rocket and missile tankage. This criteria does not govern the storage of energetic liquids for use other than in space launch vehicles, rockets, missiles, associated static tests apparatus, ammunition items, or hydrocarbon fuel essential to the operations of ships, aircraft and vehicles. The required ESQD are only based on energetic liquids' energetic reaction (blast overpressure and container fragmentation). These ESQD requirements do not consider the toxicity or potential down-wind hazard. Therefore, ESQD may not be the only factor that needs to be considered when selecting a location for storage and operation of energetic liquids. Consideration for siting laboratory quantities at less than the prescribed ESQD will be evaluated on a case-by-case basis. Distances would be based on energetic properties of the liquids and risk to personnel.

7-15.3. DETERMINATION OF ENERGETIC LIQUIDS QUANTITY.

7-15.3.1. The total quantity of energetic liquids in a tank, drum, cylinder, or other container shall be the net weight of the energetic liquids contained therein. Quantity of energetic liquids in the associated piping must be included to the points that positive means are provided for interrupting the flow through the pipe, or interrupting a reaction in the pipe in the event of an incident.

7-15.3.2. When quantities of energetic liquids are given in gallons, the conversion factors given in table 7-4 may be used to determine the quantity in pounds.

7-15.4. MEASURE OF SEPARATION DISTANCE.

7-15.4.1. Separation distances shall be measured from the closest hazard source (containers, buildings, segment, or positive cutoff point in piping, whichever is controlling).

7-15.4.2. When buildings containing a small number of cylinders or drums are present or when quantities of energetic liquids are subdivided effectively, distances may be measured from the nearest container or controlling subdivision.

7-15.5. ESQD CRITERIA. The ESQD criteria described below includes separation requirements for bulk quantities, and in some cases, minimum distances for pressure vessels and other commercial packaging. If the hazards of a particular new packaging configuration are not adequately addressed by the separations prescribed in the referenced tables, a different minimum distance may be assigned during the hazard classification process, and indicated parenthetically, in hundreds of feet, as the first element of the hazard classification. For example, if a new liquid oxygen pressure vessel configuration

is hazard classified "(10)2.2(LA)," a minimum distance of 1,000 feet would apply for inhabited building distance and public traffic route distance, rather than the minimum distance specified in table 7-5.

7-15.6. SPECIFIC HAZARDOUS LOCATIONS. Aside from the fact that the energetic liquids differ from each other, as explained for the above groups, the predominant hazard of the individual energetic liquids can vary depending upon the location of the energetic liquid storage and the operations involved. In order of decreasing hazard, these conditions are:

7-15.6.1. Launch Pads. These involve research, development, testing, space exploration, and operational launchings, as well as defense- or combat-type operations that may well be onetime events. Operations at these facilities are very hazardous because of the proximity of fuel and oxidizer to each other, the frequency of launchings, lack of restraint of the vehicle after liftoff, and the possibility of fallback with resultant dynamic mixing on impact. Launch vehicle tankage is involved and explosive equivalents must be used (table 7-3) with the combined energetic liquids weight subject to mixing except as provided in paragraph 7-15.6.4, below.

7-15.6.2. Static Test Stands. Although these can involve experimental operations, the units remain static and are subject to better control than launch vehicles. Except when run tankage for fuel and oxidizer are mounted one above the other, it may be possible to separate the tankage to reduce the hazard over that for the rocket or missile on the launch pad. Explosive equivalents shall be used (table 7-3) with the combined energetic liquids weight subject to mixing as determined by hazard analysis. The amount of energetic liquids held in run tanks can be excluded from consideration if the test stand meets the following criteria:

a. All tanks are American society of Mechanical Engineers (ASME) certified (refer to the ASME Boiler and Pressure Vessel Code, Section VIII) and designed and maintained in accordance with section VIII division 1 or division 2 of the ASME Code.

b. For cryogenic propellants, all tanks are constructed with double wall jacketing.

c. The configuration of the test stand is such that the thrust measuring structure load cell (heavily built structure) is between the engine and the run tanks so as to prevent fragments from puncturing the tanks in case of engine malfunction.

d. The fuel line contains two remotely operated valves to shut off energetic liquids flow in the event of a malfunction.

7-15.6.3. Ready Storage. This storage is relatively close to the launch and static test stands; normally it is not involved directly in feeding the engine as in the case with run tankage, which is an integral part of all launch and test stand operations. The explosive equivalents shall be used (table 7-3) with the combined energetic liquids weight subject to mixing if the facility design does not guarantee against fuel and oxidizer mixing and against detonation propagation to, or initiation at, the ready storage facility when a mishap occurs at the test stand, on the ground at the launch pad, or at the ready storage areas. Otherwise, fire and fragment hazards shall govern (tables 7-5, 7-40 through 7-43).

7-15.6.4. Cold-flow Test Operations. Fire and fragment hazards govern (tables 7-5, 7-40 through 7-43) if the design is such that the system is closed except for approved venting, is completely airtight, fuel and oxidizer never are employed concurrently, and each has a completely separate isolated system and fitting types to preclude intermixing, and the energetic liquids are of required purity. Otherwise, explosive equivalents (table 7-3) shall be used with the combined energetic liquids weight.

7-15.6.5. Bulk Storage. This is the most remote storage with respect to launch and test operations. It consists of the area, tanks, and other containers therein, used to hold energetic liquids for supplying ready storage and, indirectly, run tankage where no ready storage is available. Fire and fragment hazards govern (tables 7-5, 7-40 through 7-43) except in special cases as indicated in table 7-3 and table 7-5.

7-15.6.6. Rest Storage. This is temporary-type storage and most closely resembles bulk storage. It is a temporary parking location for barges, trailers, tank cars, and portable hold tanks used for topping operations when these units actually are not engaged in the operation; and for such vehicles when they are unable to empty their cargo promptly into the intended storage container. Fire and fragment hazards govern (tables 7-5, 7-40 through 7-43) except in special cases as indicated in table 7-3 and table 7-5. The transporter becomes a part of that storage to which it is connected during energetic liquids transfer.

7-15.6.7. Run Tankage (Operating Tankage). This consists of the tank and other containers and associated piping used to hold the energetic liquids for direct feeding into the engine or device during operation. The contents of properly separated “run tanks” (operating tankage) and piping are normally considered on the basis of the pertinent hazards for the materials involved, except for quantities of incompatible materials that are or can be in a position to become mixed. HE equivalents shall be used (table 7-3) for quantities of such materials subject to mixing unless provisions of paragraphs 7-15.6.2.a through 7-15.6.2.d are satisfied.

7-15.6.8. Pipelines. A 25-foot clear zone to inhabited buildings shall be maintained, as a minimum on each side of pipelines used for energetic liquids (excluding flammable or combustible liquids that exhibit normal fire hazards such as RP-1, JP-10, and OTTO Fuel II). Tables 7-5, 7-40 through 7-43 apply, as appropriate.

7-15.7. APPLICATION OF ESQD STANDARDS. Since many energetic liquids are not classified as UN class 1 explosives, conventional Q-D storage criteria do not generally apply to these materials. At the same time, the (non-Class 1) UN transportation hazard classifications for many energetic liquids appear to be inappropriate and/or inadequate for application to storage safety (based on available accident and test data). For example hydrazine has a UN hazard classification of 8 (corrosive), while it also is subject to dangerous fire and explosive behavior. Thus, the implementation of Q-D criteria for energetic liquids is based on an independent determination of the predominant hazard presented by the material in the storage environment. The following standards are applicable to energetic liquids used for propulsion or operation of missiles, rockets, and other related devices.

7-15.7.1. Tables 7-5, 7-40 through 7-43 provide minimum distance requirements for storage of bulk quantities, and in some cases, pressure vessels and other commercial packaging of energetic liquids. In general, storage of different energetic liquids shall be separated by the minimum distance required by the material requiring the greatest distance. In addition, positive measures shall be taken to control the flow of energetic liquids in the event of a leak or spill, in order to prevent possible fire propagation or accumulation of flammable liquids near other storage, and/or to prevent mixing of incompatible energetic liquids (except for specific hazardous locations as identified in paragraphs 7-15.6.1 through 7-15.6.3 and 7-15.6.7 above.) Explosives equivalence applies for some materials as indicated in table 7-3 and table 7-5. Fragment hazards govern for some materials in certain packaging configurations. For the more conventional fuels and oxidizers, and also where minimum blast and/or fragment criteria are not required due to low confinement packaging, Q-D standards are adopted from Occupational Safety and Health Administration (OSHA) and/or National Fire Protection Association (NFPA) guidelines to account for normal fire protection principles.

7-15.7.2. For specific hazardous locations as defined in paragraph 7-15.6 above, explosives equivalency may apply. If so, consult table 7-3 and table 7-5 with the combined energetic liquids weight subject to mixing and use distances found in table 7-10. Q-D standards for other conditions and explosive equivalents for any combination not contained in table 7-3 or table 7-5, shall be determined by NOSSA.

7-15.7.2.1. OTTO Fuel. Q-D table 7-40 shall be used for the storage of OTTO Fuel in approved shipping containers, in stock issued Mk 48 and Mk 46 fuel tanks because these all have pressure relief features. For stock issued Mk 48 and Mk 46 torpedoes hazard classified as 1.4 other than SCG "S", the Q-D of table 7-22 shall be used for storage. Table 7-40 shall be used for HC/D 1.4S exercise torpedoes. Exercise torpedoes can not be stored as inert. See table 7-5 for minimum Q-D when previously described configurations do not apply. See NAVSEA SG340-AA-MMA-010 for additional procedures for OTTO fuel.

7-15.8. CONTAMINATED ENERGETIC LIQUIDS.

7-15.8.1. Caution shall be exercised in the storage and handling of contaminated energetic liquids. Such contamination may increase the degree of hazard associated with the energetic liquids.

7-15.8.2. Energetic liquids known to be contaminated or in a suspect condition shall be isolated and provided separate storage from all other energetic liquids pending laboratory analysis for verification of contamination and disposition requirements, if any.

7-16. MINERAL EXPLORATION AND EXTRACTION.

7-16.1. MINERAL EXPLORATION. Mineral exploration and drilling activities are to be separated from PESs by PTR explosives safety distances provided there is to be no occupancy of the site by personnel when the exploration or drilling is completed, and by inhabited building explosives safety distances if occupancy is to continue when exploration or drilling is completed. If chemical contamination or conventional or chemical munitions are present, public exclusion distances must be maintained to the exploration or drilling activities. Examples of exploration activities are seismic or other geophysical tests. Examples of drilling activities are those for exploration or extraction of oil, gas, and geothermal energy.

7-16.2. MINING ACTIVITIES. Mining activities are to be separated from PESs by inhabited building explosives safety distances. If chemical contamination or conventional or chemical munitions are present, public exclusion distances must be maintained to the mining activities. Examples of mining activities are strip, shaft, open pit, and placer mining which normally require the presence of operating personnel.

7-16.3. CONTAMINATED LANDS. Exploration, drilling, and mining are prohibited on the surface of explosives or chemical contaminated lands. Exploration and extraction is permitted by directional (slant) drilling at a depth greater than 50 feet beneath the explosives contaminated land surface or by shaft mining at a depth greater than 100 feet beneath such land surface.

7-16.4. QUARRY BLASTING OPERATIONS. Safety procedures for quarry blasting operations are provided in NAVFAC P-1095. The withdrawal distance for non-essential personnel will be calculated as 1.5W, or a minimum of 1,500 feet, whichever is greater, when the total NEW of explosives material used does not exceed 2,000 pounds. When the total NEW exceeds 2,000 pounds, the withdrawal distance will be calculated as $328W^{1/3}$ as specified in paragraph 13-1.8.1 for the intentional detonation of explosives material.

Table 7-7. Class/Division 1.1 Inhabited Building and Public Traffic Route Distance

Net Explosive Weight NEW (lbs)	Distance in Feet to Inhabited Building From:				Distance in Feet to Public Traffic Route From:			
	Earth-Covered Magazine			Other PES	Earth-Covered Magazine			Other PES
	Front	Side	Rear		Front	Side	Rear	
Col 1	Col 2[1,8,9]	Col 3[1,8]	Col 4[2,8]	Col 5[3]	Col 6[8,10]	Col 7[5,8]	Col 8[6,8]	Col 9[7]
1	500	250	250	SEE NOTE 3	300	150	150	SEE NOTE 7
2	500	250	250		300	150	150	
5	500	250	250		300	150	150	
10	500	250	250		300	150	150	
20	500	250	250		300	150	150	
30	500	250	250		300	150	150	
40	500	250	250		300	150	150	
50	500	250	250		300	150	150	
100	500	250	250		300	150	150	
150	500	250	250		300	150	150	
200	700	250	250		420	150	150	
250	700	250	250		420	150	150	
300	700	250	250		420	150	150	
350	700	250	250		420	150	150	
400	700	250	250		420	150	150	
450	700	250	250		420	150	150	
500	1,250	1,250	1,250	1,250	750	750	750	750
600	1,250	1,250	1,250	1,250	750	750	750	750
700	1,250	1,250	1,250	1,250	750	750	750	750
800	1,250	1,250	1,250	1,250	750	750	750	750
900	1,250	1,250	1,250	1,250	750	750	750	750
1,000	1,250	1,250	1,250	1,250	750	750	750	750
1,500	1,250	1,250	1,250	1,250	750	750	750	750
2,000	1,250	1,250	1,250	1,250	750	750	750	750
3,000	1,250	1,250	1,250	1,250	750	750	750	750
4,000	1,250	1,250	1,250	1,250	750	750	750	750
5,000	1,250	1,250	1,250	1,250	750	750	750	750

Table 7-7. Class/Division 1.1 Inhabited Building and Public Traffic Route Distance (continued)

Net Explosive Weight NEW (lbs)	Distance in Feet to Inhabited Building From:				Distance in Feet to Public Traffic Route From:			
	Earth-Covered Magazine			Other PES	Earth-Covered Magazine			Other PES
	Front	Side	Rear		Front	Side	Rear	
Col 1	Col 2[1,8,9]	Col 3[1,8]	Col 4[2,8]	Col 5[3]	Col 6[8, 10]	Col 7[5,8]	Col 8[6,8]	Col 9[7]
3,000	1,250	1,250	1,250	1,250	750	750	750	750
4,000	1,250	1,250	1,250	1,250	750	750	750	750
5,000	1,250	1,250	1,250	1,250	750	750	750	750
6,000	1,250	1,250	1,250	1,250	750	750	750	750
7,000	1,250	1,250	1,250	1,250	750	750	750	750
8,000	1,250	1,250	1,250	1,250	750	750	750	750
9,000	1,250	1,250	1,250	1,250	750	750	750	750
10,000	1,250	1,250	1,250	1,250	750	750	750	750
15,000	1,250	1,250	1,250	1,250	750	750	750	750
20,000	1,250	1,250	1,250	1,250	750	750	750	750
25,000	1,250	1,250	1,250	1,250	750	750	750	750
30,000	1,250	1,250	1,250	1,250	750	750	750	750
35,000	1,250	1,250	1,250	1,310	750	750	750	785
40,000	1,250	1,250	1,250	1,370	750	750	750	820
45,000	1,250	1,250	1,250	1,425	750	750	750	855
50,000	1,290	1,290	1,250	1,475	775	775	750	885
55,000	1,330	1,330	1,250	1,520	800	800	750	910
60,000	1,370	1,370	1,250	1,565	822	822	750	940
65,000	1,405	1,405	1,250	1,610	845	845	750	965
70,000	1,440	1,440	1,250	1,650	865	865	750	990
75,000	1,475	1,475	1,250	1,685	885	885	750	1,010
80,000	1,510	1,510	1,250	1,725	905	905	750	1,035
85,000	1,540	1,540	1,250	1,760	925	925	750	1,055
90,000	1,570	1,570	1,250	1,795	940	940	750	1,075
95,000	1,595	1,595	1,250	1,825	960	960	750	1,095
100,000	1,625	1,625	1,250	1,855	975	975	750	1,115
110,000	1,740	1,740	1,290	1,960	1,045	1,045	770	1,175
120,000	1,855	1,855	1,415	2,065	1,110	1,110	850	1,240

Table 7-7. Class/Division 1.1 Inhabited Building and Public Traffic Route Distance (continued)

Net Explosive Weight NEW (lbs)	Distance in Feet to Inhabited Building From:				Distance in Feet to Public Traffic Route From:			
	Earth-Covered Magazine			Other PES	Earth-Covered Magazine			Other PES
	Front	Side	Rear		Front	Side	Rear	
Col 1	Col 2[1,8,9]	Col 3[1,8]	Col 4[2,8]	Col 5[3]	Col 6[8, 10]	Col 7[5,8]	Col 8[6,8]	Col 9[7]
125,000	1,910	1,910	1,480	2,115	1,165	1,165	890	1,270
130,000	1,965	1,965	1,545	2,161	1,180	1,180	925	1,300
140,000	2,070	2,070	1,675	2,255	1,245	1,245	1,005	1,355
150,000	2,175	2,175	1,805	2,350	1,305	1,305	1,085	1,410
160,000	2,280	2,280	1,935	2,435	1,370	1,370	1,160	1,460
170,000	2,385	2,385	2,070	2,520	1,430	1,430	1,240	1,515
175,000	2,435	2,435	2,135	2,565	1,460	1,460	1,280	1,540
180,000	2,485	2,485	2,200	2,605	1,490	1,490	1,320	1,565
190,000	2,585	2,585	2,335	2,690	1,550	1,550	1,400	1,615
200,000	2,680	2,680	2,470	2,770	1,610	1,610	1,480	1,660
225,000	2,920	2,920	2,810	2,965	1,750	1,750	1,685	1,780
250,000	3,150	3,150	3,150	3,150	1,890	1,890	1,890	1,890
275,000	3,250	3,250	3,250	3,250	1,950	1,950	1,950	1,950
300,000	3,345	3,345	3,345	3,345	2,005	2,005	2,005	2,005
325,000	3,440	3,440	3,440	3,440	2,065	2,065	2,065	2,065
350,000	3,525	3,525	3,525	3,525	2,115	2,115	2,115	2,115
375,000	3,605	3,605	3,605	3,605	2,165	2,165	2,165	2,165
400,000	3,685	3,685	3,685	3,685	2,210	2,210	2,210	2,210
425,000	3,760	3,760	3,760	3,760	2,250	2,250	2,250	2,250
450,000	3,830	3,830	3,830	3,830	2,300	2,300	2,300	2,300
475,000	3,900	3,900	3,900	3,900	2,340	2,340	2,340	2,340
500,000	3,970	3,970	3,970	3,970	2,380	2,380	2,380	2,380
600,000	--	--	--	4,215	--	--	--	2,530
700,000	--	--	--	4,400	--	--	--	2,640
800,000	--	--	--	4,640	--	--	--	2,785
900,000	--	--	--	4,825	--	--	--	2,895
1,000,000	--	--	--	5,000	--	--	--	3,000

Table 7-7. Class/Division 1.1 Inhabited Building and Public Traffic Route Distance (continued)

Net Explosive Weight NEW (lbs)	Distance in Feet to Inhabited Building From:				Distance in Feet to Public Traffic Route From:			
	Earth-Covered Magazine			Other PES	Earth-Covered Magazine			Other PES
	Front	Side	Rear		Front	Side	Rear	
Col 1	Col 2[1,8,9]	Col 3[1,8]	Col 4[2,8]	Col 5[3]	Col 6[8, 10]	Col 7[5,8]	Col 8[6,8]	Col 9[7]
1,250,000	--	--	--	5,385	--	--	--	3,230
1,500,000	--	--	--	5,725	--	--	--	3,435
1,750,000	--	--	--	6,025	--	--	--	3,620
2,000,000	--	--	--	6,300	--	--	--	3,780
2,250,000	--	--	--	6,550	--	--	--	3,930
2,500,000	--	--	--	6,785	--	--	--	4,070
2,750,000	--	--	--	7,005	--	--	--	4,205
3,000,000	--	--	--	7,210	--	--	--	4,325
3,250,000	--	--	--	7,405	--	--	--	4,445
3,500,000	--	--	--	7,590	--	--	--	4,555
3,750,000	--	--	--	7,770	--	--	--	4,660
4,000,000	--	--	--	7,935	--	--	--	4,760
4,250,000	--	--	--	8,100	--	--	--	4,860
4,500,000	--	--	--	8,255	--	--	--	4,955
4,750,000	--	--	--	8,405	--	--	--	5,045
5,000,000	--	--	--	8,550	--	--	--	5,130
5,500,000	--	--	--	8,825	--	--	--	5,295
6,000,000	--	--	--	9,085	--	--	--	5,450
6,500,000	--	--	--	9,330	--	--	--	5,600
7,000,000	--	--	--	9,565	--	--	--	5,740
7,500,000	--	--	--	9,785	--	--	--	5,870
8,000,000	--	--	--	10,000	--	--	--	6,000
8,500,000	--	--	--	10,205	--	--	--	6,125
9,000,000	--	--	--	10,400	--	--	--	6,240
9,500,000	--	--	--	10,590	--	--	--	6,355

Table 7-7. Class/Division 1.1 Inhabited Building and Public Traffic Route Distance (continued)

Net Explosive Weight NEW (lbs)	Distance in Feet to Inhabited Building From:				Distance in Feet to Public Traffic Route From:			
	Earth-Covered Magazine			Other PES	Earth-Covered Magazine			Other PES
	Front	Side	Rear		Front	Side	Rear	
Col 1	Col 2[1,8,9]	Col 3[1,8]	Col 4[2,8]	Col 5[3]	Col 6[8, 10]	Col 7[5,8]	Col 8[6,8]	Col 9[7]
10,000,000	--	--	--	10,770	--	--	--	6,465
11,000,000	--	--	--	11,120	--	--	--	6,670
12,000,000	--	--	--	11,445	--	--	--	6,870
13,000,000	--	--	--	11,755	--	--	--	7,055
14,000,000	--	--	--	12,050	--	--	--	7,230

NOTES:

1. Basis for columns 2 and 3 distances:

   1-45,000 lb - debris hazard - lesser distances permitted if proved sufficient to limit hazardous debris to 1/600 ft^2. Formula $D=35W^{1/3}$ (blast overpressure) may be used if fragments and debris are absent.

   45,000-100,000 lb - blast overpressure hazard. Computed by formula $D=35W^{1/3}$.

   100,000-250,000 lb - blast overpressure hazard. Computed by formula $D=0.3955W^{0.7227}$.

   250,000 lb and above - blast overpressure hazard. Computed by formula $D=50W^{1/3}$.

2. Basis for column 4 distances:

   1-100,000 lb - debris hazard - lesser distances permitted if proved sufficient to limit hazardous debris to 1/600 ft^2. Formula $D=25W^{1/3}$ (blast overpressure) may be used if fragments and debris are absent.

   100,000-250,000 lb - blast overpressure hazard. Computed by formula $D=0.004125W^{1.0898}$.

   250,000 lb and above - blast overpressure hazard. Computed by formula $D=50W^{1/3}$.

3. Basis for column 5 distances:

   1-30,000 lb - fragments and debris hazard. Lesser distances permitted by paragraph 7-6.2.1.

   30,000-100,000 lb - blast overpressure hazard. Computed by formula $D=40W^{1/3}$.

   100,000-250,000 lb - blast overpressure hazard. Computed by formula $D=2.42W^{0.577}$.

   250,000 lb and above - blast overpressure hazard. Computed by formula $D=50W^{1/3}$.

4. Column 6 distances have the same hazard bases and are equal to 60% of column 2 distances.

5. Column 7 distances have the same hazard bases and are equal to 60% of column 3 distances.

6. Column 8 distances have the same hazard bases and are equal to 60% of column 4 distances.

7. Column 9 distances have the same hazard bases and are equal to 60% of column 5 distances.

8. Reduced distances for NEWs between 30,000 and 250,000 lb are only applicable as defined in paragraph 7-6.2.1 through 7-6.2.1.11.4.

9. Column 2 IBD apply to all directions from HPMs. The maximum credible event in the HPM is used as the NEW (column 1). The limit on the design maximum credible event in an HPM is 60,000 lb NEW.

10. Column 6 Public Traffic Route Distances apply to all directions from HPMs. The maximum credible event in the HPM is used as the NEW (column 1). The limit on the design maximum credible in an HPM is 60,000 lb NEW.

Table 7-8. Hazardous Fragment Distances for Open Stacks of Selected Hazard Division 1.1 Items[1]

NOMENCLATURE	NUMBER OF UNITS									
	1	2	3	4	5	6	7	8	9	10
SPARROW, AIM-7[b]	280	565	770	955	1120	1245	--	--	--	--
Sidewinder, AIM-9	400	400	400	400	400	400	400	400	400	400[2]
Chaparral, MIM-72H	400	400	400	400	400	400	400	400	400	400[2]
Maverick, AGM 65 A/B/D	400	500	500	--	--	--	--	--	--	--
Maverick, AGM 65 E/F/G	670	900[3]	1200[3]	--	--	--	--	--	--	--
ASROC	500	500	500	--	--	--	--	--	--	--
CBU-87*	800	800	910	945	965	982	1000	1020	1035	1055[4]
Improved Hawk	900	900	900	900	900	900	900	900	900	900[2]
Penguin*	500	500	500							
Projectile, 105 mm, M1[c]	340	355	525	660	725	775	810	845	870	890[4]
Projectile, 155 mm, M107	415	590	770	955	1035	1095	1145	1195	1235	
Projectile, 5"/54	300	375	475	570	680	790	860	925	1005	1085
Harpoon*	500	600[5]	600[5]	600[5]	--	--	--	--	--	--
Tomahawk*	500	600[5]	600[5]	600[5]	--	--	--	--	--	--
Tomahawk Loading on an SSGN[g]	750	--	--	--	--	--	--	--	--	--
TOMAHAWK Loading on an SSN-774 Class[h]	600	--	--	--	--	--	--	--	--	--
Bomb, 500-pound, MK 82	670	--	--	--	--	--	--	--	--	--
Bomb, 1000-pound, MK 83	815	--	--	--	--	--	--	--	--	--
Bomb, 2000-pound, MK 84	925	--	--	--	--	--	--	--	--	--
Bomb, BLU-109	880	--	--	--	--	--	--	--	--	--
Bomb, 750-pound, M117	690	--	--	--	--	--	--	--	--	--
Torpedo Mk 46	500	500	500	500	500	500	500	500	--	--
Torpedo, MK 48[d, e]	630	775	875	925	--	--	--	--	--	--
Torpedo, Mk 48 with shield[d, f]	500	500	550	600	635	670	700	725	755	780[4]

GENERAL COMMENTS:

a. Items identified by an asterisk "*" include fragments from their shipping/storage container(s). However, all of the fragment distances in this Table may be applied to both packaged and unpackaged configurations.

b. Those items with WAU-17 warhead.

c. 105-mm projectiles and 105-mm complete rounds not in standard storage and shipping containers are HC/D 1.1.

d. All MODS (includes ADCAP).

e. These distances must be used when handling torpedo(es) from 2-½-ton trucks (or larger) where sandbag (or other equivalent) shielding (as described in note f, below) is not present between the leading edge of the torpedo(es) warhead and the truck crew cab.

f. These distances may be used when handling torpedo(es) from:

(1) 2-½-ton trucks (or larger) with sandbag (other than equivalent) shielding between the leading edge of the torpedo(es) warhead and the truck crew cab.

NOTE

Sandbag shield requirement is equivalent to a minimum thickness of two feet of sand between the truck crew cab and the torpedo(es). The sandbags must shield all parts of the crew cab and windshield from the torpedo warhead.

(2) Other means of transport, such as flatbed trailers, boats, torpedo transporters, forklifts, or portable cranes.

g. Handling is limited to one launch tube at a time, with other tubes closed. (If handling is not limited to one launch tube at a time, with other tubes closed, the NEW of the full SSGN load will apply for siting.) The reduced Q-D arc shall be drawn from the tube. (Pier-side staging areas must be sited, however, the reduced Q-D in this Table for Tomahawk Missiles may be used provided the restrictions of note 5 are applied.)

h. Handling is limited to one launch tube at a time on Virginia Class Submarines. If handling is not limited to one launch tube at a time, with other tubes closed, the NEW of the open tubes with Multiple All-Up-Round Canisters (MAC) will be applied, creating a 1,250-foot minimum fragment distance arc. The reduced Q-D arc shall be drawn from the tube. (Pier-side staging areas must be sited and the reduced Q-D in this Table for TOMAHAWK missiles may be used, provided the restrictions of note 5 are applied.)

NOTES:

1. See paragraph 7-6.2. The hazardous fragment distance is defined as the distance at which the density of hazardous fragments reaches a value of 1 per 600 ft2

2. Ten units or more until the point is reached at which this distance is exceeded by the distance requirements of table 7-9.

3. Use the distance shown only where there are less than 25 unrelated people exposed in any arc encompassing 45 degrees from 900 to 1250 feet from the PES.

4. Use 1250-foot distance for more than 10 units.

5. When handling more than one missile, the missiles must be transported and/or handled in a nose-to-tail configuration and in their launch capsule and/or shipping container; furthermore, they must be aligned and/or handled so that each group of two missiles is located outside of the warhead fragment beam spray region of the other two missiles.

Table 7-9. Hazard Class/Division 1.1 Hazardous Fragment Distances

NEW (lbs)	OPEN (ft)	STRUCTURE (ft)
≤0.5	236	200
0.7	263	200
1	291	200
2	346	200
3	378	200
5	419	200
7	445	200
10	474	200
15	506	200
20	529	200
30	561	200
31	563	200
50	601	388
70	628	519
100	658	658
150	815	815
200	927	927
300	1085	1085
450	1243	1243
>450	1250	1250

NOTES:

1. OPEN

   NEW < 100 Pounds: Hazardous Fragment Distance = 291.3+ {79.2 x ln(NEW)];

   NEW > 100 Pounds: Hazardous Fragment Distance = -1133.9 +[389 x ln(NEW)];

   NEW in pounds, Hazardous Fragment Distance in feet, with a minimum distance of 236 feet; ln is natural logarithm.

2. OPEN

   NEW = Exp [(Hazardous Fragment Distance/79.2) - 3.678];Hazardous Fragment Distance <658 feet;

   NEW = Exp [(Hazardous Fragment Distance/389) + 2.914];658 feet < Hazardous Fragment Distance < 1250 feet;

   NEW in pounds, Hazardous Fragment Distance in feet; exp [x] is e^x.

3. STRUCTURES

   NEW< 31 Pounds; Hazardous Fragment Distance = 200 feet

31 Pounds<NEW < 450 Pounds; Hazardous Fragment Distance = -1133.9 + [389 x ln (NEW)]

NEW in pounds, Hazardous Fragment Distance in feet; ln is natural logarithm.

4. STRUCTURES

Hazardous Fragment Distance < 200 feet; NEW < 31 Pounds

200 feet < Hazardous Fragment Distance < 1250 feet; NEW = exp[Hazardous Fragment Distance/389)+2.914

NEW in Pounds, Hazardous Fragment Distance in feet; exp[x] is e^x

5. Use of equations given in notes (1) through (4) to determine other Hazardous Fragment Distance-NEW combinations is allowed.

6. Public Traffic Route distance is 60% of Hazardous Fragment distance.

Table 7-10. Intraline Distances for Class/Division 1.1 Items[1]

NEW (lbs)	Distance in Feet	
	Barricaded	Unbarricaded
	$D=9W^{1/3}$	$D=18W^{1/3}$
Col. 1	Col. 2	Col. 3
50[2]	33	66
70	37	74
100	42	84
150	48	96
200	53	105
300	60	120
400	66	133
500	71	143
600	76	152
700	80	160
800	84	167
900	87	174
1,000	90	180
1,500	103	206
2,000	113	227
3,000	130	260
4,000	143	286
5,000	154	308
6,000	164	327
7,000	172	344
8,000	180	360
9,000	187	374
10,000	194	388
15,000	222	444
20,000	244	489
25,000	263	526
30,000	280	559
35,000	294	589
40,000	308	616
45,000	320	640
50,000	332	663
55,000	342	685
60,000	352	705
65,000	362	724
70,000	371	742

Table 7-10. Intraline Distances for Class/Division 1.1 Items[1] (Continued)

NEW (lbs)	Distance in Feet	
	Barricaded	Unbarricaded
	$D=9W^{1/3}$	$D=18W^{1/3}$
Col. 1	Col. 2	Col. 3
75,000	380	759
80,000	388	776
85,000	396	791
90,000	403	807
95,000	411	821
100,000	418	835
125,000	450	900
150,000	478	956
175,000	503	1,007
200,000	526	1,053
225,000	547	1,095
250,000	567	1,134
275,000	585	1,171
300,000	602	1,205
325,000	619	1,238
350,000	634	1,269
375,000	649	1,298
400,000	663	1,326
500,000[3]	714	1,429
600,000	759	1,518
700,000	799	1,598
800,000	835	1,671
900,000	869	1,738
1,000,000	900	1,800
1,500,000	1,030	2,060
2,000,000	1,134	2,268
2,500,000	1,221	2,443
3,000,000	1,298	2,596
3,500,000	1,366	2,733
4,000,000	1,429	2,857
5,000,000	1,539	3,078

NOTES:

1. Intraline separations shall mean the distance to be maintained between any two operating buildings and/ or sites within an operating line, at least one of which contains or is designed to contain explosives. The distance from service magazines for the line to the nearest operating building shall be not less than the intraline separation required for the quantity and/or type of explosives contained in the service magazine(s) and not in the operating building. This Table is applicable to all installations regardless of construction dates.

2. For less than 50 lb, less distances, determined by formulae for columns 2 and 3, may be used when structures, blast mats, and the like can completely contain fragments and debris. This Table is not applicable when blast, fragments, and debris are completely confined as in certain test firing barricades.

3. Quantities above 500,000 lb NEW are authorized only for HC/D 1.1 energetic liquids.

NOTE

Given a potential explosion site/exposed site relationship, a Q-D calculator can accurately determine either the minimum required separation distance for any NEW for Q-D purposes (NEWQD), or given a separation distance, the maximum NEWQD limit. The calculator is applicable to HC/D 1.1 through 1.4. An automated Q-D calculator is available via the NOSSA Restricted Website at https://nossa.dc3n.navy.mil.

Table 7-11. Hazard Class/Division 1.1 Intraline Distances from Earth-Covered Magazines

NEW	K9 Application			K18 Application		
	Front[1]	Side[2]	Rear[3]	Front[4]	Side[5]	Rear[6]
(lbs)	(ft)	(ft)	(ft)	(ft)	(ft)	(ft)
50	37	26	22	66	59	44
100	46	32	28	84	74	56
200	58	41	35	105	94	70
300	67	47	40	120	107	80
400	74	52	44	133	118	88
500	79	56	48	143	127	95
600	84	59	51	152	135	101
700	89	62	53	160	142	107
800	93	65	56	167	149	111
900	97	68	58	174	154	116
1,000	100	70	60	180	160	120
1,500	114	80	69	206	183	137
2,000	126	88	76	227	202	151
3,000	144	101	87	260	231	173
4,000	159	111	95	286	254	190
5,000	171	120	103	308	274	205
6,000	182	127	109	327	291	218
7,000	191	134	115	344	306	230
8,000	200	140	120	360	320	240
9,000	208	146	125	374	333	250
10,000	215	151	129	388	345	259
15,000	247	173	148	444	395	296
20,000	271	190	163	489	434	326
25,000	292	205	175	526	468	351
30,000	311	218	186	559	497	373
35,000	327	229	196	589	523	393
40,000	342	239	205	616	547	410
45,000	356	249	213	640	569	427
50,000	368	258	221	663	589	442
55,000	380	266	228	685	608	456
60,000	391	274	235	705	626	470
65,000	402	281	241	724	643	482
70,000	412	288	247	742	659	495
75,000	422	295	253	759	675	506
80,000	431	302	259	776	689	517
85,000	440	308	264	791	703	528
90,000	448	314	269	807	717	538
95,000	456	319	274	821	730	548

Table 7-11. Hazard Class/Division 1.1 Intraline Distances from Earth-Covered Magazines (continued)

NEW	K9 Application			K18 Application		
	Front[1]	Side[2]	Rear[3]	Front[4]	Side[5]	Rear[6]
(lbs)	(ft)	(ft)	(ft)	(ft)	(ft)	(ft)
100,000	464	325	278	835	743	557
125,000	500	350	300	900	800	605
150,000	531	372	319	956	850	653
175,000	559	392	336	1,007	895	700
200,000	585	409	351	1,053	936	746
225,000	608	426	365	1,095	973	792
250,000	630	441	378	1,134	1,008	840
275,000	650	455	390	1,170	1,040	888
300,000	669	469	402	1,205	1,071	937
325,000	675	518	465	1,238	1,135	1,032
350,000	680	566	530	1,268	1,199	1,129
375,000	685	615	597	1,298	1,263	1,228
400,000	690	665	665	1,326	1,328	1,328
500,000	716	714	714	1,429	1,429	1,429

NOTES:

1. $NEW \leq 300{,}000 lbs$ — $d = 10^{*}NEW^{1/3}$
   $300{,}000\ lbs < NEW\ \delta\ 500{,}000\ lbs$ — $d = (13.659 - 1.6479e - 05^{*}NEW + 1.4358e - 11^{*}NEW^{2})^{*}\ NEW^{1/3}$
   $d \leq 669ft$ — $NEW = d^{3} / 1000$
   $669ft < d \leq 716ft$ — $NEW = 1.50138e + 08 - 6.73914e + 05^{*}d + 1002.9^{*}d^{2} - 0.4938^{*}d^{3}$

2. $NEW \leq 300{,}000 lbs$ — $d = 7^{*}NEW^{1/3}$
   $300{,}000\ lbs < NEW \leq 400{,}000\ lbs$ — $d = (1.0848 + 1.986e{-}05^{*}NEW)^{*}NEW^{1/3}$
   $400{,}000\ lbs < NEW \leq 500{,}000\ lbs$ — $d = 9^{*}NEW^{1/3}$
   $d \leq 469ft$ — $NEW = d^{3} / 343$
   $469ft < d \leq 663ft$ — $NEW = 57{,}424 + 515.89^{*}d$
   $663ft < d \leq 714ft$ — $NEW = d^{3} / 729$

3. $NEW \leq 300{,}000 lbs$ — $d = 6^{*}NEW^{1/3}$
   $300{,}000\ lbs < NEW \leq 400{,}000\ lbs$ — $d = (-3.059 + 3.0228e{-}05^{*}NEW)^{*}NEW^{1/3}$
   $400{,}000\ lbs < NEW \leq 500{,}000\ lbs$ — $d = 9^{*}NEW^{1/3}$
   $d \leq 402ft$ — $NEW = d^{3} / 216$
   $402ft < d \leq 665ft$ — $NEW = 148{,}160 + 379.7^{*}d$
   $665ft < d \leq 714ft$ — $NEW = d^{3} / 729$

4.	$NEW \leq 500{,}000 lbs$	$d = 18 * NEW^{1/3}$
	$d \leq 1429 ft$	$NEW = d^3/5{,}832$
5.	$NEW \leq 300{,}000 lbs$	$d = 16 * NEW^{1/3}$
	$300{,}000\ lbs < NEW \leq 400{,}000\ lbs$	$d = (9.9683 + 2.0135e{-}05 * NEW) * NEW^{1/3}$
	$400{,}000\ lbs < NEW \leq 500{,}000\ lbs$	$d = 18 * NEW^{1/3}$
	$d \leq 1071 ft$	$NEW = d^3 / 4{,}096$
	$1071 ft < d \leq 1328 ft$	$NEW = -118{,}180 + 390.35 * d$
	$1328 ft < d < 1429 ft$	$NEW\ d^3 = / 5{,}832$
6.	$NEW \leq 100{,}000 lbs$	$d = 12 * NEW^{1/3}$
	$100{,}000\ lbs < NEW \leq 300{,}000\ lbs$	$d\ (11.521 + 1.9918e - 06 * NEW + 2.0947e - 11 * NEW^2) * NEW^{1/3}$
	$300{,}000\ lbs < NEW \leq 400{,}000\ lbs$	$d = (1.9389 + 4.0227e{-}05 * NEW) * NEW^{1/3}$
	$400{,}000\ lbs < NEW \leq 500{,}000\ lbs$	$d = 18 * NEW^{1/3}$
	$d \leq 557 ft$	$NEW = d3 / 1{,}728$
	$557 ft < d < 938 ft$	$NEW = -193{,}080 + 526.83 * d$
	$938 ft < d \leq 1328 ft$	$NEW = 60{,}778 + 225.83 * d$
	$1328 ft < d \leq 1429 ft$	$NEW = d3 / 5{,}832$

Table 7-12. Intermagazine Hazard Factors and Distances for Hazard Class/Division 1.1

Use this Table to find the hazard factor, K, corresponding to the type of PES and ES. Use the column for this hazard factor in table 7-14 to determine the appropriate distance for the next explosive weight in the PES.

Legend: S - Side; R - Rear; F - Front; B - Barricaded; U – Unbarricaded

ECM - Earth-covered Magazine; AGM - Aboveground Magazine; HPM - High Performance Magazine;

PES - Potential Explosion Site; ES - Exposed Site.

From PES →		ECM[2]				AGM or Aboveground Operating Building[3]		Modules and/or Cells		HP Magazine[8]	
To ES ↓		S	R	F(B)	F(U)	B	U	B	U	S, R	F[9]
ECM[2], (7 Bar)	S	1.25	1.25	2.75	2.75	4.5	4.5	4.5	4.5	1.25	2.75
	R	1.25	1.25	2	2	4.5	4.5	4.5	4.5	1.25	2
	FU	2.75	2	6	6	6	6	6	6	2.75	6
	FB[4]	2.75	2	4.5	6	4.5	6	4.5	6	2.75	6
2. ECM[2], (3 Bar)	S	1.25	1.25	2.75	2.75	6	6	6	6	1.25	2.75
	R	1.25	1.25	2	2	6	6	6	6	1.25	2
	FU	4.5	4.5	6	9	6	9	6	9	4.5	9
	FB[4]	4.5	4.5	6	6	6	6	6	6	4.5	6
ECM[2], (Undefined)	S	1.25[5] 2[6]	1.25[5] 2[6]	4.5[5] 6[6]	4.5[5] 6[6]	6	6	6	6	1.25	4.5
	R	1.25	1.25	2	2	6	6	6	6	1.25	2
	FU	6	6	6	11	6	11	6	11	6	11
	FB[4]	6	6	6	6	6	6	6	6	6	6
AGM[3]	U	6	6	6	11	6	11	6	11	6	11
	B	6	6	6	6	6	6	6	6	6	6
Modules and/or Cells	U	6	6	6	11	6	11	1.1[7]	11	6	11
	B	1.25	1.25	6	6	6	6	1.1[7]	1.1[7]	1.25	6
HP Magazine[8]	S,R,F[10]	1.25	1.25	2.75	2.75	4.5	4.5	4.5	4.5	1.25	2.75

NOTES:

1. Except as noted, K-factors for ECMs and AG Magazines are applicable for NEW up to 500,000 lb in the PES. NEW in a Module and/or Cell is limited to 250,000 lb.

2. Descriptions of the earth-covered magazines are in paragraph 8-2.4.1.

3. Aboveground magazines are all types of above grade (not earth-covered) magazines or storage pads. See paragraphs 7-9.1.1.i and 7-9.2.1.k for separation of service magazines from operating buildings.

4. Those barricades serve to mitigate both fragments and overpressure hazards. See paragraph 8-2.5.2 for their requirements.

5. Use of this K-factor for NEW in PES up to 250,000 lb.

6. Use of this K-factor for NEW in PES above 250,000 lb.

7. Modules and/or Cells are defined in paragraph 8-2.4.4.

8. A description of the HPM is in subsection paragraph 7-8.1.6. The MCE in the HPM is 60,000 lb.

9. The unbarricaded front (entrance to Loading Dock) is a factor when the HPM is the PES because the MCE includes explosives at the loading dock. The K-factors have been determined accordingly.

10. The storage areas in the HPM are barricaded on all sides and protected by a reinforced concrete cover. All directions are therefore considered to be Side, S, orientations when it is the ES.

Table 7-13. Intermagazine Hazard Factors and Distances for Hazard Class/Division 1.1 to Existing Type I, Type IIA, and Type IIB Smokeless Powder/Projectile Magazines

From PES →		Existing ECM (7-Bar, 3-Bar, Undefined or Smokeless Powder/Projectile Magazine)				New ECM				AGM or Aboveground Operating Building		Modules and/or Cells		HPM	
To ES ↓		S	R	FB	FU	S	R	FB	FU	B	U	B	U	S	F
Type I Smokeless Powder/ Projectile Magazine[4]	S	4.5[1] 6[5]	4.5[1] 6[5]	6	6	6	6	6	6	6	6	6	6	6	6
	R	4.5[1] 6[5]	4.5[1] 6[5]	6	6	6	6	6	6	6	6	6	6	6	6
	Fu	6	6	6	11	6	6	6	11	6	11	6	11	6	11
	Fb	6	6	6	6	6	6	6	6	6	6	6	6	6	6
Type IIA or Type IIB Smokeless Powder/ Projectile Magazine	S	1.25[1] 2[2] 6[3]	1.25[1] 2[2] 6[3]	6	6	6	6	6	6	6	6	6	6	6	6
	R	1.25[1,2] 6[3]	1.25[1,2] 6[3]	6	6	6	6	6	6	6	6	6	6	6	6
	FU	6	6	6	11	6	6	6	11	6	11	6	6	6	11
	FB	6	6	6	6	6	6	6	6	6	6	6	6	6	6

NOTES:

1. Use this K-factor for NEWQD in PES up to 250,000 lb.

2. Use this K-factor for NEWQD in PES greater than 250,000 lbs. but not greater than 350,000 lbs.

3. Use this K-factor for NEWQD in PES greater than 350,000 lbs. but not greater than 500,000 lbs.

4. Flat roof magazines will not provide asset preservation in the event of an explosives incident.

5. Use this K-factor for NEWQD in PES greater than 250,000 lbs. but not greater than 500,000 lbs.

Table 7-14. Hazard Class/Division 1.1 Intermagazine Hazard Factor and Distances for Use with Table 7-12 and Table 7-13

NEW	Hazard Factor (K) from Table 7-12 and Table 7-13										
	$1.1W^{1/3}$	$1.25W^{1/3}$	$2W^{1/3}$	$2.75W^{1/3}$	$4W^{1/3}$	$4.5W^{1/3}$	$5W^{1/3}$	$6W^{1/3}$	$8W^{1/3}$	$9W^{1/3}$	$11W^{1/3}$
Col 1	Col 2	Col 3	Col 4	Col 5	Col 6	Col 7	Col 8	Col 9	Col 10	Col 10a	Col 11
100	7	7	9	13	19	21	23	28	37	42	51
110	7	7	10	13	19	22	24	29	38	43	53
120	7	7	10	14	20	22	25	30	39	44	54
140	7	7	10	14	21	23	26	31	42	47	57
150	7	7	11	15	21	24	27	32	43	48	58
170	7	7	11	15	22	25	28	33	44	50	61
190	7	7	11	16	23	26	29	34	46	52	63
220	7	8	12	17	24	27	30	36	48	54	66
250	7	8	13	17	25	28	31	38	50	57	69
280	7	8	13	18	26	29	33	39	52	59	72
310	7	8	14	19	27	30	34	41	54	61	74
350	8	9	14	19	28	32	35	42	56	63	78
390	8	9	15	20	29	33	37	44	58	66	80
440	8	10	15	21	30	34	38	46	61	68	84
500	9	10	16	22	32	36	40	48	63	71	87
560	9	10	16	23	33	37	41	49	66	74	91
630	9	11	17	24	34	39	43	51	69	77	94
700	10	11	18	24	36	40	44	53	71	80	98
790	10	12	18	25	37	42	46	55	74	83	102
890	11	12	19	26	38	43	48	58	77	87	106
1,000	11	13	20	28	40	45	50	60	80	90	110
1,100	11	13	21	28	41	46	52	62	83	93	114
1,200	12	13	21	29	43	48	53	64	85	96	117
1,400	12	14	22	31	45	50	56	67	89	101	123
1,500	13	14	23	31	46	52	57	69	92	103	126
1,700	13	15	24	33	48	54	60	72	95	107	131
1,900	14	15	25	34	50	56	62	74	99	111	136
2,200	14	16	26	36	52	59	65	78	104	117	143

Table 7-14. Hazard Class/Division 1.1 Intermagazine Hazard Factor and Distances for Use with Table 7-12 and Table 7-13 (continued)

NEW	Hazard Factor (K) from Table 7-12 and Table 7-13										
	$1.1W^{1/3}$	$1.25W^{1/3}$	$2W^{1/3}$	$2.75W^{1/3}$	$4W^{1/3}$	$4.5W^{1/3}$	$5W^{1/3}$	$6W^{1/3}$	$8W^{1/3}$	$9W^{1/3}$	$11W^{1/3}$
Col 1	Col 2	Col 3	Col 4	Col 5	Col 6	Col 7	Col 8	Col 9	Col 10	Col 10a	Col 11
2,500	15	17	27	37	54	61	68	81	109	122	149
2,800	16	18	28	39	56	63	70	85	113	127	155
3,100	16	18	29	40	58	66	73	87	117	131	160
3,500	17	19	30	42	61	68	76	91	121	137	167
3,900	17	20	31	43	63	71	79	94	126	142	173
4,400	18	20	33	45	66	74	82	98	131	147	180
5,000	19	21	34	47	68	77	85	103	137	154	188
5,600	20	22	36	49	71	80	89	107	142	160	195
6,300	20	23	37	51	74	83	92	111	148	166	203
7,000	21	24	38	53	77	86	96	115	153	172	210
7,900	22	25	40	55	80	90	100	119	159	179	219
8,900	23	26	41	57	83	93	104	124	166	186	228
10,000	24	27	43	59	86	97	108	129	172	194	237
11,000	24	28	44	61	89	100	111	133	178	200	245
12,000	25	29	46	66	92	103	114	137	183	206	252
14,000	27	30	48	66	96	108	121	145	193	217	265
15,000	27	31	49	68	99	111	123	148	197	222	271
17,000	28	32	51	71	103	116	129	154	206	231	283
19,000	29	33	53	73	107	120	133	160	213	240	294
22,000	31	35	56	77	112	126	140	168	224	252	308
25,000	32	37	58	80	117	132	146	175	234	263	322
28,000	33	38	61	84	121	137	152	182	243	273	334
31,000	35	39	63	86	126	141	157	188	251	283	346
35,000	36	41	65	90	131	147	164	196	262	294	360
39,000	37	42	68	93	136	153	170	203	271	305	373
44,000	39	44	71	97	141	159	177	212	282	318	388
50,000	41	46	74	101	147	166	184	221	295	332	405
56,000	42	48	77	105	153	172	191	230	306	344	421
63,000	44	50	80	109	159	179	199	239	318	358	438
70,000	45	52	82	113	165	185	206	247	330	371	453

Table 7-14. Hazard Class/Division 1.1 Intermagazine Hazard Factor and Distances for Use with Table 7-12 and Table 7-13 (continued)

NEW	Hazard Factor (K) from Table 7-12 and Table 7-13										
	$1.1W^{1/3}$	$1.25W^{1/3}$	$2W^{1/3}$	$2.75W^{1/3}$	$4W^{1/3}$	$4.5W^{1/3}$	$5W^{1/3}$	$6W^{1/3}$	$8W^{1/3}$	$9W^{1/3}$	$11W^{1/3}$
Col 1	Col 2	Col 3	Col 4	Col 5	Col 6	Col 7	Col 8	Col 9	Col 10	Col 10a	Col 11
79,000	47	54	86	118	172	193	215	257	343	386	472
89,000	49	56	89	123	179	201	223	268	357	402	491
100,000	51	58	93	128	186	209	232	278	371	418	511
110,000	53	60	96	132	192	216	240	287	383	431	527
120,000	54	62	99	136	197	222	247	296	395	444	543
140,000	57	65	104	143	208	234	260	312	415	467	571
150,000	58	66	106	146	213	239	266	319	425	478	584
170,000	61	69	111	152	222	249	277	332	443	498	609
190,000	63	72	115	158	230	259	287	345	460	517	632
220,000	66	75	121	166	241	272	302	362	483	543	664
250,000	69	79	126	173	252	283	315	378	504	567	693
280,000	72	82	131	180	262	294	327	393	523	589	720
310,000	74	85	135	186	271	305	338	406	541	609	744
350,000	78	88	141	194	282	317	352	423	564	634	775
390,000	80	91	146	201	292	329	365	438	584	657	804
440,000	84	95	152	209	304	342	380	456	608	684	837
500,000	87	99	159	218	317	357	397	476	635	714	873
560,000	91	103	165	227	330	371	412	495	659	742	907
630,000	94	107	171	236	343	386	429	514	686	772	943
700,000	98	111	178	244	355	400	444	533	710	799	977
790,000	102	116	185	254	370	416	462	555	740	832	1017
890,000	106	120	192	265	385	433	481	577	770	866	1058
1,000,000	110	125	200	275	400	450	500	600	800	900	1100
1,100,000	114	129	206	284	413	465	516	619	826	929	1136
1,200,000	117	133	213	292	425	478	531	638	850	956	1169
1,400,000	123	140	224	308	447	503	559	671	895	1007	1231
1,500,000	126	143	229	315	458	515	572	687	916	1030	1259
1,700,000	131	149	239	328	477	537	597	716	955	1074	1313
1,900,000	136	155	248	341	495	557	619	743	991	1115	1362
2,200,000	143	163	260	358	520	585	650	780	1040	1170	1431

Table 7-14. Hazard Class/Division 1.1 Intermagazine Hazard Factor and Distances for Use with Table 7-12 and Table 7-13 (continued)

NEW	Hazard Factor (K) from Table 7-12 and Table 7-13										
	1.1W1/3	1.25W1/3	2W1/3	2.75W1/3	4W1/3	4.5W1/3	5W1/3	6W1/3	8W1/3	9W1/3	11W1/3
Col 1	Col 2	Col 3	Col 4	Col 5	Col 6	Col 7	Col 8	Col 9	Col 10	Col 10a	Col 11
2,500,000	149	170	271	373	543	611	679	814	1086	1221	1493
2,800,000	155	176	283	389	564	634	705	838	1128	1268	1550
3,100,000	160	182	292	401	583	656	729	875	1166	1312	1604
3,500,000	167	190	304	418	607	683	759	911	1215	1366	1670
3,900,000	173	197	315	433	630	708	787	944	1259	1416	1731
4,400,000	180	205	328	451	655	737	819	983	1311	1475	1803
5,000,000	188	214	342	470	684	769	855	1026	1368	1539	1881
5,600,000	195	222	355	488	710	799	888	1065	1421	1598	1953
6,300,000	203	231	369	508	739	831	923	1108	1478	1662	2032
7,000,000	210	239	383	526	765	861	956	1148	1530	1722	2104
7,900,000	219	249	398	548	797	896	996	1195	1593	1792	2191
8,900,000	228	259	414	570	829	933	1036	1243	1658	1865	2280
10,000,000	237	269	431	592	862	969	1077	1293	1724	1939	2370
11,000,000	245	278	445	612	890	1001	1112	1334	1779	2001	2446
12,000,000	252	286	458	630	916	1030	1145	1374	1832	2060	2518
14,000,000	265	301	482	663	964	1085	1205	1446	1928	2169	2651
15,000,000	271	308	493	678	986	1110	1233	1480	1973	2219	2713

Table 7-15. Summary of Hazard Sub-Divisions 1.2.1, 1.2.2, and 1.2.3 Quantity-Distances
(All distances are in feet)

To EXPOSED SITE (ES)		From POTENTIAL EXPLOSION SITE (PES)				
		ECM		AGS		
		S or R	F	(H)	(H/R)	(L)
ECM (7 bar/3 bar) (IMD)	S	0 (note 1)	0 (note 1)	0 (note 1)	0 (note 1)	0 (note 1)
	R	0 (note 1)	0 (note 1)	0 (note 1)	0 (note 1)	0 (note 1)
	FU	0 (note 1)	0 (note 1)	0 (note 1)	0 (note 1)	0 (note 1)
	FB	0 (note 1)	0 (note 1)	0 (note 1)	0 (note 1)	0 (note 1)
ECM (Undefined) (IMD)	S	0 (note 1)	0 (note 1)	0 (note 1)	0 (note 1)	0 (note 1)
	R	0 (note 1)	0 (note 1)	0 (note 1)	0 (note 1)	0 (note 1)
	FU	0 (note 1)	200/300/100	200/300/100	200/300/100	200/300/100
	FB	0 (note 1)	0 (note 1)	0 (note 1)	0 (note 1)	0 (note 1)
AGS (H/R) (IMD)	U or B	0 (note 1)	0 (note 1)	0 (note 1)	0 (note 1)	0 (note 1)
AGS (H or L) (IMD)	U or B	0 (note 1)	200/300/100	200/300/100	200/300/100	200/300/100
ILD[5]		0 (note 1)	Note 2	Note 2	Note 2	Note 2
PTR[5]		200/300/100	Note 3	Note 3	Note 3	Note 3
IBD[5]		200/300/100	Note 4	Note 4	Note 4	Note 4

LEGEND

S - Side; **R** - Rear; **F** - Front; **B** - Barricaded; **U** - Unbarricaded; **FU** - Front Unbarricaded; **FB** - Front Barricaded.

ECM - Earth-Covered Magazine (7-bar, 3-bar, undefined refers to the strength of the headwall).

AGS - Aboveground Site; aboveground, non-earth-covered magazine, structure or storage pad.

AGS (H) - Aboveground site, Heavy Wall; Buildings with wall thickness > 12 inches of reinforced concrete; as an ES, door must be barricaded if it faces a PES.

AGS (H/R) - Aboveground site, Heavy Wall and Roof; AGS (H) with roof thickness > 5.9 inches of reinforced concrete; as an ES, door must be barricaded if it faces a PES; side/rear exposures may or may not be barricaded.

AGS (L) - Aboveground site Light; Light structure, open stack, truck, trailer, or railcar (open stacks - see note 4)

IMD - Intermagazine Distance; **ILD** - Intraline Distance;

PTR - Public Traffic Route Distance; **IBD** - Inhabited Building Distance

NOTES:

1. Practical considerations such as firefighting and security will dictate specific separation distances. A minimum separation of 20 feet should be provided.

2. ILD = 36% of IBD with a minimum distance equal to the Intermagazine Distance given in this Table for the applicable PES-ES combination.

3. PTR = 60% of IBD with a minimum distance equal to the Intermagazine Distance given in this Table for light structures, open stacks, trucks, trailers, or rail cars. Such structures are designated as AGS (L).

4. For HC/D 1.2.1 items in a structure, truck, trailer, or railcar, use the larger of the two applicable values given in Tables 7-16 and 7-17; for HC/D 1.2.1 items in the open use table 7-16; for HC/D 1.2.2 items use table 7-18.

5. See paragraph 7-8.2.7 for HC/D 1.2.3.

6. When the NEW and the MCE of the packaged HC/D 1.2.1 items fall within the ranges specified in equation ( ) the HC/D 1.2.1 will be treated as HC/D 1.1 and the criteria of paragraph 7-6.2.1, as applicable, will be used (see paragraph 7-8.2.1.1).

7. See paragraph 7-8.2.8.2 for operations and storage involving limited quantities of HC/D 1.2.2 without application of ESQD.

GENERAL COMMENTS

a. For PES-ES combinations where three distances are given, the first refers to a PES containing HC/D 1.2.1 items with an MCE<100 pounds, the second to a PES containing HC/D 1.2.1 items with an MCE>100 pounds, and the third refers to a PES containing HC/D 1.2.2 items. Where three intermagazine distances are given, the intermagazine distance from a PES containing only HC/D 1.2.3 items to an ES containing other than HC/D 1.2.3 is K11 based on the largest MCE of the HC/D 1.2.3 items in the PES.

b. For an ES containing only HC/D 1.2.3 items, the IMD from any PES to such an ES is 0 (note 1).

Table 7-16. Hazard Class/Sub-Division 1.2.1 Quantity-Distances for Munitions with NEWQD > 1.60 Pounds[1,2]

Explosive Weight[1,2,3] (lbs)	Inhabited Building Distance[4,5,6] (ft)	Public Traffic Route Distance[7] (ft)	Intraline Distance[8] (ft)
2	200	200	200
5	200	200	200
10	200	200	200
20	200	200	200
40	200	200	200
60	200	200	200
80	224	200	200
100	268	200	200
150	348	209	200
200	404	242	200
300	481	289	200
400	535	321	200
600	610	366	220
800	662	397	238
1,000	702	421	253
1,500	774	464	279
2,000	824	494	297
2,500	862	517	310
3,000	893	536	322
3,500	919	551	331
4,000	941	565	339
5,000	978	587	352
6,000	1008	605	363
7,000	1033	620	372
8,000	1055	633	380
9,000	1074	644	387
10,000	1091	654	393
15,000	1154	693	416
20,000	1199	719	432

Table 7-16. Hazard Class/Sub-Division 1.2.1 Quantity-Distances for Munitions with NEWQD > 1.60 Pounds[1,2] (Continued)

Explosive Weight[1,2,3] (lbs)	Inhabited Building Distance[4,5,6] (ft)	Public Traffic Route Distance[7] (ft)	Intraline Distance[8] (ft)
25,000	1233	740	444
30,000	1260	756	454
40,000	1303	782	469
50,000	1335	801	481
60,000	1362	817	490
70,000	1384	830	498
80,000	1402	841	505
90,000	1419	851	511
100,000	1434	860	516
150,000	1489	894	536
200,000	1528	917	550
250,000	1558	935	561
300,000	1582	949	569
350,000	1601	961	577
400,000	1619	971	583
450,000	1633	980	588
500,000	1647	988	593
>500,000	Note 6	Note 7	Note 8

NOTES:

1. The quantity-distance criteria for hazard Class/Subdivision 1.2.1 items are based on the hazards from primary fragments. When stored in structures which may contribute to the debris hazard (secondary fragments), the inhabited building distance for items whose MCE is greater than 31 pounds is determined by using the larger of the following two distances: those given in this Table for the appropriate explosive weight or those given in table 7-17 for the appropriate MCE. Structures that may contribute to the debris hazard for storage of HC/D 1.2.1 ammunition include: (a) all earth-covered magazines-frontal exposure only. Side and rear exposures have fixed minimum distances for inhabited building distance; (b) all aboveground sites, including heavy wall (H), heavy wall/roof (H/R), and light wall (L) as defined in table 7-15, unless data/analyses are provided to show that the structural debris contribution is less.

2. See table 7-15 for Intraline distance, PTR distance, and Inhabited Building Distance for earth-covered magazines.

3. Explosive Weight = Number of items x NEWQD.

4. Inhabited Building Distance = -735.186 + [237.559 x ln (number of items x NEWQD)] - {4.274 X [ln (number of items x NEWQD)]2} minimum of 200 feet; Inhabited Building Distance in feet, NEWQD in pounds; ln is natural logarithm.

5. Number of items x NEWQD = exp[27.791-(600.392-0.234xIBD)1/2]; inhabited building distance in feet; NEWQD in pounds; exp ( ) is e2 [200<IBD<2016]

6. Use of equations given in notes (4) and (5) to determine inhabited building distance ranges for other weights is allowed.

7. PTR Distance = 60% of Inhabited Building Distance; with a minimum distance equal to the intermagazine distance given in table 7-15 for the applicable PES-ES contribution.

8. Intraline Distance = 36% of Inhabited Building Distance; with a minimum distance equal to the intermagazine distance given in table 7-15 for the applicable PES-ES contribution.

Table 7-17. Hazardous Debris Distances for HC/D 1.2.1 Items Stored in Structures which can Contribute to the Debris Hazard

MCE (lbs)	HAZARDOUS DEBRIS DISTANCE[1, 2] (ft)	PTR[4] (ft)	ILD[5] (ft)
≤31	200	200	200
35	249	200	200
40	301	200	200
45	347	208	200
50	388	233	200
75	546	328	200
100	658	395	237
125	744	446	268
150	815	489	293
175	875	525	315
200	927	556	334
225	973	584	350
250	1014	608	365
275	1051	631	378
300	1085	651	391
325	1116	670	402
350	1145	687	412
375	1172	703	422
400	1197	718	431
425	1220	732	439
450	1243	746	447
>450	1250	750	450

NOTES:

1. Hazardous Debris Distance = -1133.9 + [389 x ln(MCE)]; [31<MCE<450]

   MCE in pounds, Hazardous Debris Distance in feet with a minimum distance of 200 feet; In is a natural logarithm.

2. MCE = Exp [(Hazardous Debris Distance/389) + 2.914]; [200 <Hazardous Debris Distance <1250]

   MCE in pounds, Hazardous Debris Distance in feet; exp ( ) is ex.

3. Use of equations given in notes (1) and (2) to determine other Hazardous Debris Distance-MCE combinations is allowed.

4. PTR = 60% of IBD with a minimum distance equal to the Intermagazine Distance given in table 7-15 for light structures, open stacks, trucks, trailers, or rail cars. Such structures are designated as a AGS (L) in table 7-15.

5. ILD = 36% of IBD with a minimum distance equal to the Intermagazine Distance given in table 7-15 for the applicable PES-ES combination.

GENERAL COMMENTS:

a. The quantity-distance criteria for HC/D 1.2.1 items are based on the hazards from primary fragments. When stored in structures which may contribute to the debris hazard (secondary fragments), the IBD for HC/D 1.2.1 items whose MCE is greater than 31 pounds is determined by using the larger of the following two distances: those given in table 7-16 for the appropriate Explosive Weight or those given in this Table for the appropriate MCE. Structures that may contribute to the debris hazard for storage of HC/D 1.2.1 ammunition include: (a) all earth-covered magazines (ECM) - Frontal exposure only. Side and rear exposures have fixed minimum distances for IBD; (b) all aboveground sites (AGS)--Including heavy wall (H), heavy wall/roof (H/R), and light wall (L) as defined in table 7-15, unless data/analyses are provided to show that the structural debris contribution is less. Note that ILD and PTR are based on 36% and 60%, respectively, of the applicable IBD as determined in this note with the following minimum distances: ILD minimum distances are given in table 7-15 for applicable PES-ES combinations and PTR minimum distances are given in table 7-18 for AGS(L).

b. See table 7-15 for a summary of Intermagazine Distances (IMD) and minimum distances for ILD and PTR.

Table 7-18. Hazard Class/Sub-Division 1.2.2 Quantity-Distances for Munitions with NEWQD ≤ 1.60 Pounds[1, 2]

Explosive Weight[3] (lbs)	Inhabited Building Distance[4, 5, 6] (ft)	Public Traffic Route Distance[7] (ft)	Intraline Distance[8] (ft)
1	100	100	100
2	100	100	100
5	100	100	100
10	100	100	100
20	100	100	100
40	100	100	100
60	123	100	100
80	131	100	100
100	138	100	100
150	152	100	100
200	162	100	100
300	179	107	100
400	192	115	100
600	211	127	100
800	226	136	100
1,000	238	143	100
1,500	262	157	100
2,000	279	168	101
2,500	294	176	106
3,000	306	183	110
3,500	316	190	114
4,000	325	195	117
5,000	341	205	123
6,000	355	213	128
7,000	366	220	132
8,000	376	226	135
9,000	385	231	139
10,000	394	236	142
15,000	427	256	154

Table 7-18. Hazard Class/Sub-Division 1.2.2 Quantity-Distances for Munitions with NEWQD ≤ 1.60 Pounds[1, 2] (Continued)

Explosive Weight[3] (lbs)	Inhabited Building Distance[4, 5, 6] (ft)	Public Traffic Route Distance[7] (ft)	Intraline Distance[8] (ft)
20,000	451	271	162
25,000	471	282	169
30,000	487	292	175
40,000	514	308	185
50,000	535	321	193
60,000	553	332	199
70,000	568	341	204
80,000	581	349	209
90,000	593	356	214
100,000	604	362	217
150,000	647	388	233
200,000	678	407	244
250,000	703	422	253
300,000	723	434	260
350,000	741	445	267
400,000	757	454	272
450,000	771	462	277
500,000	783	470	282
>500,000	Note 6	Note 7	Note 8

NOTES:

1. The quantity-distance criteria for hazard Class/Subdivision 1.2.2 items are based on the hazards from primary fragments.

2. See table 7-15 for Intraline distance, PTR distance, and Inhabited Building Distance for earth-covered magazines.

3. Explosive Weight = Number of items x NEWQD.

4. Inhabited Building Distance = 101.649 - [15.934 x ln(number of items x NEWQD)] + [5.173 x ln(number of items x NEWQD)2] minimum of 100 feet Inhabited Building Distance in feet, NEWQD in pounds; ln is natural logarithm [20<explosive weight].

5. Number of items x NEWQD = exp[1.5401 + (-17.278 + 0.1933 x IBD)1/2]; Inhabited Building Distance in feet; NEWQD in pounds; exp ( ) is e2 [100<IBD<1240]

6. Use of equations given in notes (4) and (5) to determine inhabited building distance ranges for other weights is allowed.

7. PTR Distance = 60% of Inhabited Building Distance; with a minimum distance equal to the intermagazine distance given in table 7-15.

8. Intraline Distance = 36% of Inhabited Building Distance; with a minimum distance given in table 7-15 for the applicable PES-ES combination.

Table 7-19. Hazard Class/Sub-Division 1.2.1, 1.2.2, and 1.2.3 Mixing Rules

Hazard Sub-Division Involved	Distances to be Applied
1.2.1	Apply Class/Division 1.2.1 distances
1.2.2	Apply Class/Division 1.2.2 distances
1.2.3	Apply Class/Division 1.2.3 distances
1.2.1 + 1.2.2	Apply greater of two distances
1.2.1 + 1.2.3	Apply greater of two distances
1.2.2 + 1.2.3	Apply greater of two distances

Table 7-20. Quantity-Distance Requirements for Class/Division 1.3 Items[1,2,5]

NEW (lbs)	IBD or PTR[3] (ft)	Aboveground IMD or ILD[4] (ft)
1,000	75	50
1,500	82	56
2,000	89	61
3,000	101	68
4,000	110	75
5,000	117	80
6,000	124	84
7,000	130	88
8,000	135	92
9,000	140	95
10,000	145	98
12,000	153	104
14,000	161	109
15,000	164	112
16,000	168	114
18,000	174	118
20,000	180	122
22,000	185	126
24,000	190	129
26,000	195	132
28,000	200	135
30,000	204	138
32,000	208	141
34,000	212	144
36,000	216	147
38,000	220	149
40,000	224	151
42,000	227	154
44,000	231	156
46,000	234	158
48,000	237	160

Table 7-20. Quantity-Distance Requirements for Class/Division 1.3 Items[1,2,5] (Continued)

NEW (lbs)	IBD or PTR[3] (ft)	Aboveground IMD or ILD[4] (ft)
50,000	240	163
52,000	243	165
54,000	246	167
56,000	249	168
58,000	252	170
60,000	255	172
62,000	257	174
64,000	260	176
66,000	263	178
68,000	265	179
70,000	268	181
72,000	270	182
74,000	273	184
76,000	275	186
78,000	277	187
80,000	279	189
82,000	282	190
84,000	284	192
86,000	286	193
88,000	288	195
90,000	290	196
92,000	292	198
94,000	294	199
96,000	296	201
98,000	298	202
100,000	300	204
110,000	310	210
120,000	319	217
130,000	328	223
140,000	337	229
150,000	346	234

Table 7-20. Quantity-Distance Requirements for Class/Division 1.3 Items[1,2,5] (Continued)

NEW (lbs)	IBD or PTR[3] (ft)	Aboveground IMD or ILD[4] (ft)
160,000	354	240
170,000	362	245
180,000	370	250
190,000	378	255
200,000	385	260
210,000	393	265
220,000	400	270
230,000	407	274
240,000	414	279
250,000	421	283
260,000	428	287
270,000	434	291
280,000	441	296
290,000	448	300
300,000	454	303
310,000	460	307
320,000	467	311
330,000	473	315
340,000	479	319
350,000	485	322
360,000	491	326
370,000	497	330
380,000	503	333
390,000	509	337
400,000	514	340
410,000	520	343
420,000	526	347
430,000	531	350
440,000	537	353
450,000	542	356
460,000	548	360

Table 7-20. Quantity-Distance Requirements for Class/Division 1.3 Items[1,2,5] (Continued)

NEW (lbs)	IBD or PTR[3] (ft)	Aboveground IMD or ILD[4] (ft)
470,000	553	363
480,000	559	366
490,000	564	369
500,000	569	372
510,000	575	375
520,000	580	378
530,000	585	381
540,000	590	384
550,000	595	387
560,000	600	390
570,000	605	393
580,000	610	396
590,000	615	399
600,000	620	401
610,000	625	404
620,000	630	407
630,000	635	410
640,000	640	412
650,000	645	415
660,000	649	418
670,000	654	420
680,000	659	423
690,000	664	426
700,000	668	428
710,000	673	431
720,000	678	434
730,000	682	436
740,000	687	439
750,000	692	441
760,000	696	444
770,000	701	446

Table 7-20. Quantity-Distance Requirements for Class/Division 1.3 Items[1,2,5] (Continued)

NEW (lbs)	IBD or PTR[3] (ft)	Aboveground IMD or ILD[4] (ft)
780,000	705	449
790,000	710	451
800,000	714	454
810,000	719	456
820,000	723	458
830,000	728	461
840,000	732	463
850,000	736	466
860,000	741	468
870,000	745	470
880,000	749	473
890,000	754	475
900,000	758	477
910,000	762	480
920,000	767	482
930,000	771	484
940,000	775	487
950,000	779	489
960,000	784	491
970,000	788	493
980,000	792	495
990,000	796	498
1,000,000	800	500
1,500,000	916	572
2,000,000	1,008	630

NOTES:

1. Items shall be placed in this Class/Division if they qualify for assignment to it after evaluation in accordance with paragraph 7-5.

2. For reasons of operational necessity and as approved by NOSSA or NOSSA Atlantic /Pacific, limited quantities in this HC/D, such as document destroyers, signaling devices, and riot control munitions may be stored without regard to quantity-distance in accordance with fire protection regulations in facilities such as hangars,

arms rooms and manufacturing or operating buildings. Marine Corps activities will obtain authorization for storing limited quantities of this class in accordance with MCO 5100.29 Volume 8 (series).

3. (NEW in lbs, d in ft)

$NEW \leq 1{,}000$lbs

$d_{IBD,\ PTRD} = 75$

$1{,}000\text{lbs} < NEW \leq 96{,}000\,lbs$

$d_{IBD,\ PTRD} = \exp[\ 2.47 + 0.2368 * (ln(NEW)\ ) + 0.00384 * (\ ln(NEW)\ )^2\ ]$

$96{,}000\,lbs < NEW \leq 1{,}000{,}000\,lbs$

$d_{IBD,\ PTRD} = \exp[\ 7.2297 - 0.5984 * (\ ln(NEW)\ ) + 0.04046 * (\ ln(NEW)\ )^2\ ]$

$NEW > 1{,}000{,}000\,lbs$

$d_{IBD,\ PTRD} = 8 * NEW^{1/3}$

$75\,ft \leq d_{IBD,\ PTRD} \leq 296$ft

$NEW = \exp[-\ 30.833 + (307.465 + 260.417 * (ln(d_{IBD,\ PTRD})))^{1/2}\ ]$

with a minimum NEW of 1,000lbs

$296\,ft < d_{IBD,\ PTRD} \leq 800\,ft$

$NEW = \exp[\ 7.395 + (-\ 124.002 + 24.716 * (ln(d_{IBD,\ PTRD})))^{1/2}\ ]$

$800\,ft < d_{IBD,\ PTRD}$

$NEW = d^{\ 3}_{IBD,\ PTRD}/512$

4. Existing earth-covered magazines, regardless of orientation, that meet the construction and barricading requirements of chapter 8 and are sited one from another for a minimum of 100 pounds NEW of Class/Division 1.1 (using the intermagazine separation criteria of tables 7-12 and 7-13) may be used to their physical storage capacity for Class/Division 1.3, provided all other quantity-distance relationships (IBD, PTR and ILD) are sited using table 7-20 for Class/Division 1.3 NEW.

$NEW \leq 1{,}000$lbs

$d_{IMD,\ ILD} = 50$

$1{,}000\text{lbs} < NEW \leq 84{,}000$lbs

$d_{\ IMD,\ ILD} = \exp[\ 2.0325 + 0.2488 * (ln(NEW)) + 0.00313 * (ln(NEW))2\ ]$

$84{,}000\,lbs < NEW \leq 1{,}000{,}000\,lbs$

$d_{\ IMD,\ ILD} = \exp[\ 4.338 - 0.1695 * (ln(NEW)) + 0.0221 * (ln(NEW))2\ ]$

$1{,}000{,}000\text{lbs} < NEW$

$d_{\ IMD,\ ILD} = 5 * NEW^{1/3}$

$50\,ft \leq d_{\ IMD,\ ILD} \leq 192\,ft$

$NEW = \exp[\ -\ 39.744 + (930.257 + 319.49 * (ln(d_{\ IMD,\ ILD})))^{1/2}\ ]$

with a minimum NEW of 1,000lbs

$192\,ft \leq d_{\ IMD,\ ILD} \leq 500\,ft$

$NEW = \exp[\ 3.834 + (-\ 181.58 + 45.249 * (ln(d_{\ IMD,\ ILD})))^{1/2}\ ]$

$500\,ft < d_{\ IMD,\ ILD}$

$NEW = d^3_{\ IMD,\ ILD}/125$

5. Linear interpolation of NEW quantities between Table entries is permitted.

Table 7-21. Quantity-Distance Requirements for Class/Division 1.3 Bulk Smokeless Powder, Ballistite in Process[1] and Not in Containers

Quantity in Pounds of Smokeless Powder or Ballistites		Distance in Feet		
Over	**Not Over**	**Inhabited Building Distance**	**Public Traffic Route Distance**	**Intraline Distance**
100	1,000	100	100	50
1,000	5,000	150	150	75
5,000	10,000	200	200	100
10,000	20,000	250	250	125
20,000	30,000	285	285	145
30,000	40,000	310	310	155
40,000	50,000	330	330	165
50,000	60,000	345	345	175
60,000	70,000	360	360	185
70,000	80,000	375	375	190
80,000	90,000	390	390	195
90,000	100,000	400	400	200
100,000	200,000	500	500	250
200,000	300,000[2]	600	600	300

NOTES

1. Such as in propellant dry houses.

2. Maximum quantity permitted in any one location.

Table 7-22. Quantity-Distances Class/Division 1.4[1, 12, 13]

NEW[2] (lbs)	IBD/PTRD[3] (ft)	ILD[4, 5] (ft)	AGS (L) IMD[5, 6] (ft)	AGS(H)+(H/R) IMD[5, 7] (ft)	ECM IMD[5] (ft)
≤ 3000[8]	75	50	50	0 to and from	0 to and from the Sides and Rear; see note 11 for the Front
> 3000[9]	100	100/50[10]	100/50[10]		

NOTES:

1. With reasonable care in storage, HC/D 1.4 materials may be stored in any weatherproof warehouse area for general supplies provided warehouses used for the storage of HC/D 1.4 ammunition are separated from all other warehouses by at least the aboveground magazine separation distance specified, based on the AGS(L) IMD column.

2. See paragraph 7-4.2.9 for the applicability of HC/D 1.4 quantity-distance criteria and the determination of NEW when HC/D 1.4 and other HC/D ammunition and explosives are located in the same site.

3. IBD and PTRD are 50 ft from the sides and rear of an ECM. IBD and PTRD are 50 ft from an AGS(H), an AGS(H/R), and an ECM front that meets the definition of AGS(H) as defined in the legend for table 7-15; doors and other openings shall be barricaded in accordance with paragraph 8-2.5, or the IBD or PTRD column of this Table applied from them.

4. ILD is 0 ft from the sides and rear of an ECM. ILD is 0 ft from an AGS(H), an AGS(H/R), and an ECM that meets the definition of AGS(H) as defined in the legend for table 7-15; doors and other openings shall be barricaded in accordance with paragraph 8-2.5 or the ILD column of this Table applied from these doors and openings.

5. Magazines storing only HC/D 1.4 may be located at these magazine or intraline distances from all other magazines or operating buildings regardless of the hazard division or quantity of explosives authorized in those adjacent structures. Because the HC/D 1.4 may be destroyed as a result of an accident involving the assets in the adjacent structures, a letter signed by the commanding officer, accepting the potential risk, must be provided in the site approval request.

6. Applies to all AGS(L) as defined in the legend for table 7-15.

7. Applies to all AGS(H) and AGS(H/R) as defined in the legend for table 7-15. Doors and other openings shall be barricaded in accordance with paragraph 8-2.5 or the AGS(L) IMD column of this Table applied to and from these doors and openings

8. When approved by NOSSA, limited quantities of items in this Class, except 20 mm HE and incendiary rounds, may be stored in facilities such as hangars, troop buildings, and manufacturing or operating buildings without regard to quantity-distance in order to meet operational requirements. Examples include small-arms ammunition, riot control munitions and pyrotechnics for alert or security purposes. Also, small magazines, when used essentially in the same manner, may be separated by appropriate fire protection distances. Marine Corps activities will obtain authorization for storing limited quantities of this class in accordance with MCO 5100.29 Volume 8 (series).

9. There is no upper limit on the NEW specifically required for safety reasons.

10. Use the smaller distance when the ES is of noncombustible construction (see Appendix A for definition of combustible/noncombustible construction).

11. Apply the appropriate AGS column of this Table based on whether the ECM front meets the definition of AGS(L) or AGS(H), as defined in the legend for table 7-15.

12. Refer to NAVSEA SW020-AC-SAF-010 for the list of HC/D 1.4 items.

13. HC/D 1.4S may be stored (including associated handling) without regard to ESQD criteria in accordance with paragraph 7-5.5.

Table 7-23. Quantity-Distance Criteria for EIS and Class/Division 1.6 Articles[1,2,3,4,5]

NEW (lbs)	IBD or PTR (ft)	Aboveground IMD or ILD (ft)
100	37	23
200	47	29
300	54	33
400	59	37
500	64	40
600	67	42
700	71	44
800	74	46
900	77	48
1000	80	50
2000	101	63
3000	115	72
4000	127	79
5000	137	86
6000	145	91
7000	153	96
8000	160	100
9000	166	104
10,000	172	108
15,000	197	123
20,000	217	136
25,000	234	146
30,000	249	155
35,000	262	164
40,000	274	171
45,000	285	178
50,000	295	184
55,000	304	190
60,000	313	196
65,000	322	201
70,000	330	206
75,000	337	211

Table 7-23. Quantity-Distance Criteria for EIS and Class/Division 1.6 Articles[1,2,3,4,5] (Continued)

NEW (lbs)	IBD or PTR (ft)	Aboveground IMD or ILD (ft)
80,000	345	215
85,000	352	220
90,000	359	224
95,000	365	228
100,000	371	232
110,000	383	240
120,000	395	247
125,000	400	250
130,000	405	253
140,000	415	260
150,000	425	266
160,000	434	271
170,000	443	277
175,000	447	280
180,000	452	282
190,000	460	287
200,000	468	292
225,000	487	304
250,000	504	315
275,000	520	325
300,000	536	334
325,000	550	344
350,000	564	352
375,000	577	361
400,000	589	368
425,000	601	376
450,000	613	383
475,000	624	390
500,000	635	397

NOTES:

1. The same distances are used for aboveground intermagazine distances (IMD) and intraline distances (ILD). Earth-covered magazines may be used to their physical capacity for this division, provided they comply with the construction and siting requirements for HC/D 1.1.

2. For quantities less than 100 lbs, the required distances are those specified for 100 lbs. The use of lesser distances may be approved when supported by test data and/or analysis.

3. Interpolation is permitted. For inhabited building distance (IBD) and PTR use $D=8W^{1/3}$. For aboveground IMD and intraline distance (ILD) use $5W^{1/3}$.

4. Unit risk distance for air blast applies as a minimum; for IBD or PTR, $D=40W^{1/3}$ and for aboveground IMD or ILD, that is $D=18^{1/3}$, based on a single round of ammunition.

5. For HC/D 1.6 items packed in non-flammable pallets or packing and stored in an ECM, when acceptable to NOSSA and the DWESO on a site-specific basis, the following quantity-distance criteria apply, unless table 7-23 permits a lesser distance requirement; IBD and PTR--100 ft; aboveground IMD and ILD–50 ft; earth-covered IMD–no specified requirements.

Table 7-24. Variation of Maritime Prepositioning Force Ships Inhabited Building Distance/Public Traffic K Factors

PERCENT HC/D 1.1	IBD *	PTR
UP TO 52%	40.85	24.01
53	40.97	24.08
54	41.10	24.16
55	41.22	24.23
56	41.35	24.30
57	41.47	24.37
58	41.59	24.44
59	41.71	24.52
60	41.83	24.59
61	41.95	24.66
62	42.07	24.73
63	42.19	24.80
64	42.30	24.86
65	42.42	24.93

NOTE:

If HD 1.1 percentage is greater than 65%, use table 7-7.

* Minimum distance is 3,700 feet. See paragraph 7-10.3.

Table 7-25. Variation of Maritime Prepositioning Force Ships Ship-to-Ship Distance with Loadout

PERCENT HC/D 1.1	SHIP-TO-SHIP *
UP TO 52%	32.00
53	32.10
54	32.19
55	32.29
56	32.39
57	32.48
58	32.58
59	32.67
60	32.77
61	32.86
62	32.95
63	33.05
64	33.14
65	33.23

NOTE:

If HD 1.1 percentage is greater than 65%, use $40W^{1/3}$.

* Minimum distance is 3,500 feet. See paragraph 7-10.3.

Table 7-26. Minimum Quantity-Distance Separation Between Ship Units (Ship, Barge, and/or Pier) and Other Areas [Note (a)]

Item #	To Determine Separation Between Ship (or Barge) Units and Following Targets	Note (b) Toward Target Use		Note (c) From Target Use		Remarks
		Table	Column	Table	Column	
1	Terminal Boundary	7-7	5	N/A		
2	Main Ship Channel	7-7	9	N/A		See note (d)
3	Public Highway & Passenger RR	7-7	9	N/A		
4	Admin & Industrial Areas	7-7	5	N/A		
5	Inert Storage Area	N/A		N/A		See paragraph 7-13.6
6	Recreation Area	7-7	9	N/A		See paragraph 7-13.2
7	Steel Tanks on Surface	7-27	5	N/A		See paragraph 7-13.7
8	Explosive Anchorage	7-27				
	a. Loaded Ship Area	7-27	5	7-27	5	Larger distance governs
	b. Loading & Unloading Area	7-27	5	7-27	5	Larger distance governs
	c. Ship or Barge Unit (Both in same anchorage)	7-27	4	7-27	4	Larger distance governs
	d. Ship or Barge Unit	7-27	5	7-27	5	Larger distance governs
9	Classification Yard	7-14	9, 11 (g)	N/A		Applicable intermagazine distance for HC/D 1.1 material
10	Explosives Operating Area	7-14	9, 11 (g)	7-7	5(f)(h)	Larger distance governs
11	Ammunition & Explosives Storage	7-14	9, 11 (g)	7-7	5(e)(i)	Larger distance governs
12	Holding Yard	7-14	9, 11 (g)	7-7	5(i)	Larger distance governs
13	Truck Holding Yard	7-14	11	7-7	5(h)	Larger distance governs
14	Scuttling Site	N/A		7-27	4	See figure 7-3
15	Suspect Truck or Car Site	N/A		7-7	5(i)	See paragraph 7-12.5
16	Helipad (Explosives Cargo)	7-10	3	7-7	5(i)	Larger distance governs
17	Barge Pier	7-14	9, 11 (g)	7-27	4	Larger distance governs
18	Barge Anchorage	7-14	9, 11 (g)	7-27	5	Larger distance governs

NOTES:

a. The term “ship unit” includes any combination of ship, barge, or pier/wharf not separated from one another by the required distance to prevent propagation between units as defined by paragraph 7-10.6.1.

b. Use quantity of explosives in ship or barge unit.

c. Use quantity of explosives at target.

d. When the minimum separation distance of table 7-7, column 9 cannot be obtained, it is recommended that arrangements be made to stagger the loading and passing of vessels so that the hazards of an explosion during loading of a vessel will be minimized at the closer distances.

e. Columns 2, 3, and 4 of table 7-7 can be used if the magazine size requirements defined in note 8 of table 7-7 are met. For HPM use K4.5.

f. See paragraph 7-10.7.5.

g. Table 7-14, column 9 is used when barricades are provided; column 11 when no barricade or inadequate barricades exist.

h. For barge piers, use intraline distance from table 7-10.

i. For barge piers, use intermagazine distance from table 7-14.

Table 7-27. Separation Distances for Pier and Wharf Facilities

Net Explosive Weight (million pounds)	Distance (feet)			
	$6W^{1/3}$	$11W^{1/3}$	$18W^{1/3}$	$40W^{1/3}$
Col. 1	Col. 2	Col. 3	Col. 4	Col. 5
0.001[1]	60	110	180	400
0.01	130	235	390	860
0.10	280	510	835	1855
0.25	380	690	1135	2520
0.50	475	875	1430	3175
0.60	505	930	1520	3375
0.70	535	975	1600	3550
0.80	555	1020	1670	3715
0.90	580	1065	1740	3860
1.00	600	1100	1800	4000
1.25	645	1185	1940	4310
1.50	690	1265	2060	4580
1.75	725	1325	2170	4820
2.00	755	1385	2270	5040
2.25	785	1440	2360	5240
2.50	815	1495	2445	5430
2.75	840	1540	2520	5605
3.00	865	1585	2595	5770
3.25	890	1630	2665	5925
3.50	910	1670	2735	6075
3.75	930	1705	2795	6215
4.00	955	1750	2855	6350
4.25	970	1780	2915	6480
4.50	990	1815	2970	6605
4.75	1010	1850	3025	6725
5.00	1025	1880	3080	6840
5.50	1060	1950	3175	7060
6.00	1090	2000	3270	7270
6.50	1120	2055	3360	7465
7.00	1145	2100	3445	7650

Table 7-27. Separation Distances for Pier and Wharf Facilities (Continued)

Net Explosive Weight (million pounds)	Distance (feet)			
	$6W^{1/3}$	$11W^{1/3}$	$18W^{1/3}$	$40W^{1/3}$
Col. 1	Col. 2	Col. 3	Col. 4	Col. 5
7.50	1175	2155	3525	7830
8.00	1200	2200	3600	8000
8.50	1225	2245	3675	8165
9.00	1250	2290	3745	8320
9.50	1270	2330	3815	8470
10.00	1290	2365	3880	8620
11.00	1330	2440	4005	8895
12.00	1375	2520	4120	9160
13.00	1410	2585	4230	9405
14.00	1445	2655	4340	9640
15.00	1480	2715	4440	9865

NOTE:

1. The distance given for 0 to 1,000 lb NEW constitutes the minimum spacing permitted.

Table 7-28. Quantity-Distance Standards for Class/Division 1.1 Items at Airfields and Helipads

NEW		Distance in Feet for Specific Targets Indicated in Table 7-29[1]
Over	Not Over	Unbarricaded D = $30W^{1/3}$
Column 1	Column 2	Column 3
0	50[2]	110
50	100	140
100	200	175
200	300	200
300	400	220
400	500	240
500	600	255
600	700	265
700	800	280
800	900	290
900	1,000	300
1,000	1,500	345
1,500	2,000	380
2,000	3,000	435
3,000	4,000	480
4,000	5,000	515
5,000	6,000	545
6,000	7,000	575
7,000	8,000	600
8,000	9,000	625
9,000	10,000	645
10,000	15,000	740
15,000	20,000	815
20,000	25,000	875
25,000	30,000	935
30,000	35,000	980
35,000	40,000	1,025
40,000	45,000	1,070
45,000	50,000	1,105
50,000	55,000	1,140
55,000	60,000	1,175
60,000	65,000	1,205
65,000	70,000	1,235[3]

Table 7-28. Quantity-Distance Standards for Class/Division 1.1 Items at Airfields and Helipads (Continued)

NEW		Distance in Feet for Specific Targets Indicated in Table 7-29[1]
Over	Not Over	Unbarricaded $D = 30W^{1/3}$
Column 1	Column 2	Column 3
70,000	75,000	1,265
75,000	80,000	1,295
80,000	85,000	1,320
85,000	90,000	1,345
90,000	95,000	1,370
95,000	100,000	1,390
100,000	125,000	1,500
125,000	150,000	1,595
150,000	175,000	1,675
175,000	200,000	1,755
200,000	225,000	1,825
225,000	250,000	1,890
250,000	275,000	1,950
275,000	300,000	2,005
300,000	325,000	2,065
325,000	350,000	2,115
350,000	375,000	2,165
375,000	400,000	2,210
400,000	425,000	2,250
425,000	450,000	2,300
450,000	475,000	2,340
475,000	500,000	2,380

NOTES:

[1]To protect against low angle high speed missiles, barricades should be provided. However, these distances shall not be reduced.

[2]The distance given for 0 to 50 lb NEW constitutes the minimum spacing permitted.

[3]The minimum distance for Class/Division 1.1 of 1,250 ft (see paragraph 7-6.2), does not apply to targets for which this Table is used.

CAUTION

The magazine and intraline distances specified in the preceding notes will provide protection only against the simultaneous detonation of mass detonating explosives on adjacent aircraft. This distance does not prevent serious damage to aircraft or provide protection against the propagation of an incident from the source by fragments, debris, or fire to the ammunition and explosives on adjacent aircraft.

Table 7-29. Application of Safety Distances as Related to Airfields and Helipads

To → / From: ↓	Combat Aircraft Parking Area	Ammunition & Explosives Cargo Area & Helipad	Ammunition & Explosives Storage Facilities	Ready Ammunition Storage Facilities	Ammunition & Explosives Operating Facilities	Inhabited Buildings	Public Traffic Route and Taxiways (Joint DoW/Non-DoW Component Use)	Runways and Taxiways (DoW Component Use Only)	Runways (Joint DoW/Non-DoW Component Use)	Aircraft Parking Area	Recreational Area	Aircraft Passenger Loading/ Unloading Area
Combat Aircraft Parking Area	4	4	3	3	5	1	2	13	1	11	9	8
Ammunition & Explosives Cargo Area & Helipad	4	4	3	3	5	1	2	13	1	11	10	8
Ammunition & Explosives Storage Facilities	6	3	3	3	5	1	2	12	1	7	10	8
Ammunition & Explosives Operating Facilities	6	3	3	3	5	1	2	2	1	7	10	8
Ready Ammunition Storage Facilities	4	4	3	3	5	1	2	13	1	11	9	8

NOTES:

1. Use inhabited building distances specified in appropriate tables as determined by the hazard classification of material.

2. Use PTR distances specified in appropriate tables as determined by the hazard classification of the material.

3. For HC/D 1.1 explosives, use appropriate intermagazine distance. For HC/D 1.2 (1.2.1, 1.2.2, and/or 1.2.3), apply note 10 below.

4. For hazard HC/D 1.1 explosives, use appropriate intermagazine distance. For HC/D 1.2 (1.2.1, 1.2.2, and/or 1.2.3) apply note 10 below. These distances protect against simultaneous detonation of ammunition on adjacent

aircraft, but does not prevent serious damage to aircraft and possible propagation of detonation due to fragments, debris, or fire.

5. Use intraline distances specified in appropriate tables as determined by the hazard classification of the material.

6. Use table 7-28 distances for mass-detonating items and PTR distances specified in appropriate tables for non-mass detonating items.

7. Use table 7-28 distances for DoW Component aircraft parking areas and inhabited building distance in appropriate tables for non-DoW Component aircraft parking areas.

8. Use PTR distances specified in the appropriate tables for locations in the open where passengers enplane and deplane. Use inhabited building distance specified in the appropriate tables if a structure is included where passengers assemble, such as a passenger terminal building.

9. No distance required to recreational areas that are used exclusively for alert personnel manning the combat loaded aircraft. Other recreational areas where people are in the open shall remain at PTR distance as specified in appropriate tables. When structures, including bleacher stands, are a part of this area, inhabited building distance, as specified in appropriate tables shall be used.

10. Recreational areas, where people are in the open, shall be at PTR distance as specified in appropriate tables. When structures including bleacher stands are part of this area, inhabited building distance, as specified in appropriate tables shall be used.

11. Within these areas of airfields and helipads used exclusively by DoW Components, the separation of aircraft parking areas from combat aircraft parking areas and their ready ammunition storage facilities, and ammunition and explosives cargo areas are considered to be a command function. At joint DoW/non-DoW use airfields and helipads, the combat aircraft parking area and its ready ammunition storage facilities and ammunition and explosives cargo area shall be separated from non-DoW aircraft as specified in note 6.

12. For Class/Division 1.1, use columns 5 and 6, table 7-11 distances from side and rear of ECM to taxiways; for Class/Division 1.2, 1.3, or 1.4, no separation is required from side or rear of ECM to taxiways. Use PTR distance from front of ECM or any other storage locations to taxiway. Use PTR distance from all storage locations to runways.

13. No explosives safety distances are imposed. However, airfield clearance criteria specified in NAVFAC P-80.3 must be considered.

Table 7-30. Non-DoW Explosives Activities on DoW Installations

To → / From: ↓	Non-DoW Storage	DoW/Joint Storage	Non-DoW Operations	DoW Operations	Shared Launch Facilities	DoW Non-Explosives Facilities/ Operations Non-Related
Non-DoW Storage	Check for IM	IM	Check for IM	IBD	IBD	IBD
Non-DoW Operations	Check for IM	IBD	Check for IM	IBD	IBD	IBD
Shared Launch Facilities	IBD	IBD	IBD	IBD	IL	IBD
DoW/Joint Storage	IM	IM	IBD	IL	IBD	IBD
DoW Operations	IBD	IL	IBD	IL	IBD	IBD

IM: Intermagazine Distance (if intermagazine distance is not maintained between each PES, explosives quantities will be totaled).

IBD: Inhabited Building Distance

IL: Intraline Distance

DoW Operations/Storage: Explosives operations conducted by DoW, or other federal agency under DoW oversight, procedure, or control and in accordance with the explosives safety standards of DESR 6055.09. This term is applicable only to DoW and federal explosives operations, and to non-DoW commercial enterprises directly supporting DoW and federal explosives contractual efforts.

Non-DoW Operations/Storage: Explosives operations/storage conducted on DoW property in accordance with only this table, BATF, FAA or other federal, state, and local explosives safety requirements. Under these type operations, DoW will be responsible only for ensuring IM standards are met as outlined in explosives site plan submissions. This does not constitute “DoW oversight” as intended in the above definition of “DoW Operations/Storage.”

Shared Launch Facility: Any space or orbital launch facility that supports both DoW and non-DoW launch services and operations, as determined by service involved or by mutual agreement when multiple DoW military services are involved. Joint Storage: DoW/non-DoW explosives storage under DoW control.

Table 7-31. Criteria for Launch Facilities and Associated Explosives Activities on DoW Installations[1, 5]

To → / From: ↓		Non-DoW Storage	Non-DoW Operations	Launch Facilities			DoW Storage	DoW Operations
				Non-DoW	DoW	Shared		
Non-DoW Storage		IBD[2]	IBD[2]	IBD[2]	IBD[2]	IBD[2]	IMD	IBD[2]
Non-DoW Operations		IBD[3]	IBD[3]	IBD[3]	IBD[3]	IBD[3]	IBD[3]	IBD[3]
Launch Facilities	Non-DoW	IBD[3]	IBD[3]	IBD[3]	IBD[3]	IBD[3]	IBD[3]	IBD[3]
	DoW	IBD[3]	IBD[3]	IBD[3]	ILD	IBD[3]	ILD	ILD
	Shared	IBD[3]	IBD[3]	IBD[3]	IBD[3]	IBD[3]	IBD[3]	IBD[3]
DoW Storage		IMD	IBD[2]	IBD[2]	IMD	IBD[2]	IMD	IMD
DoW Operations		IBD[3]	IBD[3]	IBD[3]	ILD	IBD[3]	ILD	ILD
Non-Explosives Facilities and Non-Related Operations		IBD[4]	IBD[4]	IBD[4]	IBD[4]	IBD[4]	IBD[4]	IBD[4]

Notes:

1. Table 7-30 is applicable for non-DoW explosives activities (AE operations and storage) that do not involve launch facilities and associated explosives activities on DoW installations.

2. IMD may be applied provided the increased risk of exposure to applicable resources and mission is accepted via a mutually signed risk acceptance and agreement among the entities involved (e.g., between non-DoW entities, between non-DoW and DoW entities).

3. Unbarricaded ILD may be applied provided the increased risk of exposure to personnel, resources (facilities, equipment, launch vehicles/payloads), mission, and National security goals, as applicable, is assessed, and accepted via a mutually signed risk acceptance and agreement among the entities involved, e.g., between non-DoW entities (i.e., the appropriate authorities/leaderships, commensurate with the risk, of involved Commercial Companies, NASA or other non-DoW federal departments/agencies) and acknowledged by the Installation/Delta Commander; between non-DoW entities and the DoW Installation/Delta Commander; between DoW tenant Commander and non-DoW entities and acknowledged by the Installation/Delta Commander.

4. PTRD is permitted to low and medium density roadways and privately owned vehicle parking areas. Unbarricaded ILD is permitted to non-explosives facilities related to a launch facility (e.g., change house, field office) and associated explosives activities (e.g., integration facility) for personnel and resources belonging to a single entity (DoW or Non-DoW); for personnel and resources belonging to discrete entities, the increased risks associated with application of Unbarricaded ILD must be accepted via a mutually signed risk acceptance and agreement between those entities.

5. Accidental criteria is identified in this table. Static firing/testing activities must comply with the criteria in paragraph 13-2.2.

Table 7-32. Chamber Loading Density (W)

NEW (lbs)	Chamber volume (ft^3)							
	2,000	**5,000**	**10,000**	**20,000**	**30,000**	**50,000**	**75,000**	**100,000**
1,000	0.500	0.200	0.100	0.050	0.033	0.020	0.013	0.010
1,200	0.600	0.240	0.120	0.060	0.040	0.024	0.016	0.012
1,400	0.700	0.280	0.140	0.070	0.047	0.028	0.019	0.014
1,600	0.800	0.320	0.160	0.080	0.053	0.032	0.021	0.016
1,800	0.900	0.360	0.180	0.090	0.060	0.036	0.025	0.018
2,000	1.000	0.400	0.200	0.100	0.067	0.040	0.027	0.020
2,500	1.250	0.500	0.250	0.125	0.083	0.050	0.033	0.025
3,000	1.500	0.600	0.300	0.150	0.100	0.060	0.040	0.030
3,500	1.750	0.700	0.350	0.175	0.117	0.070	0.047	0.035
4,000	2.000	0.800	0.400	0.200	0.133	0.080	0.053	0.040
5,000	2.500	1.000	0.500	0.250	0.167	0.100	0.067	0.050
6,000	3.000	1.200	0.600	0.300	0.200	0.120	0.080	0.060
7,000	3.500	1.400	0.700	0.350	0.233	0.140	0.093	0.070
8,000	4.000	1.600	0.800	0.400	0.267	0.160	0.107	0.080
9,000	4.500	1.800	0.900	0.450	0.300	0.180	0.120	0.090
10,000	8.000	2.000	1.000	0.500	0.333	0.200	0.133	0.100
12,000	6.000	2.400	1.200	0.600	0.400	0.240	0.160	0.120
14,000	7.000	2.800	1.400	0.700	0.467	0.280	0.187	0.140
16,000	8.000	3.200	1.600	0.800	0.533	0.320	0.213	0.160
18,000	9.000	3.600	1.800	0.900	0.600	0.360	0.240	0.180
20,000	10.000	4.000	2.000	1.000	0.667	0.400	0.267	0.200
25,000	12.500	5.000	2.500	1.250	0.833	0.500	0.333	0.250
30,000	15.000	6.000	3.000	1.500	1.000	0.600	0.400	0.300
35,000	17.500	7.000	3.500	1.750	1.167	0.700	0.467	0.350
40,000	20.000	8.000	4.000	2.000	1.333	0.800	0.533	0.400
45,000	22.500	9.000	4.500	2.250	1.500	0.900	0.600	0.450
50,000	25.000	10.000	5.000	2.500	1.667	1.000	0.667	0.500
60,000	30.000	12.000	6.000	3.000	2.000	1.200	0.800	0.600
70,000	35.000	14.000	7.000	3.500	2.333	1.400	0.933	0.700
80,000	40.000	16.000	8.000	4.000	2.667	1.600	1.067	0.800

Table 7-32. Chamber Loading Density (W) (Continued)

NEW (lbs)	Chamber volume (ft^3)							
	2,000	**5,000**	**10,000**	**20,000**	**30,000**	**50,000**	**75,000**	**100,000**
90,000	45.000	18.000	9.000	4.500	3.000	1.800	1.200	0.900
100,000	50.000	20.000	10.000	5.000	3.333	2.000	1.333	1.000
120,000	60.000	24.000	12.000	6.000	4.000	2.400	1.600	1.200
140,000	70.000	28.000	14.000	7.000	4.667	2.800	1.867	1.400
160,000	80.000	32.000	16.000	8.000	5.333	3.200	2.133	1.600
180,000	90.000	36.000	18.000	9.000	6.000	3.600	2.400	1.800
200,000	100.000	40.000	20.000	10.000	6.667	4.000	2.667	2.000
300,000	150.000	60.000	30.000	15.000	10.000	6.000	4.000	3.000
400,000	200.000	80.000	40.000	20.000	13.333	8.000	5.333	4.000
500,000	250.000	100.000	50.000	25.000	16.667	10.000	6.667	5.000
600,000	300.000	120.000	60.000	30.000	20.000	12.000	8.000	6.000
700,000	350.000	140.000	70.000	35.000	23.333	14.000	9.333	7.000
800,000	400.000	160.000	80.000	40.000	26.667	16.000	10.667	8.000
900,000	450.000	180.000	90.000	45.000	30.000	18.000	12.000	9.000
1,000,000	500.000	200.000	100.000	50.000	33.333	20.000	13.333	10.000

Table 7-33. Chamber Separation Distances for Underground Storage

Weight (lbs)	D_{cd} (ft)	D_{cd}(ft)		
	$1.5CW^{1/3}$	$2.5CW^{1/3}$	$3.5CW^{1/3}$	$5.0CW^{1/3}$
1,000	15	25	35	50
1,200	16	27	37	53
1,400	17	28	39	56
1,600	17.5	29	41	58
1,800	18	30	43	61
2,000	19	31	44	63
2,500	20.4	34	48	68
3,000	22	36	50	72
3,500	23	38	53	76
4,000	24	40	56	79
4,500	25	41	58	83
5,000	26	43	60	85
6,000	27	45	64	91
7,000	29	48	67	96
8,000	30	50	70	100
9,000	31	52	73	104
10,000	40	67	93	133
12,000	34	57	80	114
14,000	36	60	84	121
16,000	38	63	88	126
18,000	39	66	92	131
20,000	41	68	95	136
25,000	44	73	102	146
30,000	47	78	109	155
35,000	49	82	114	164
40,000	51	85	120	171
45,000	53	89	126	178
50,000	55	92	129	184
60,000	59	98	137	196
70,000	62	103	144	206
80,000	65	108	151	215
90,000	67	112	157	224
100,000	70	116	162	232

Table 7-33. Chamber Separation Distances for Underground Storage (Continued)

Weight (lbs)	D_{cd} (ft)	D_{cd}(ft)		
	$1.5CW^{1/3}$	$2.5CW^{1/3}$	$3.5CW^{1/3}$	$5.0CW^{1/3}$
120,000	74	1123	173	247
140,000	78	130	182	260
160,000	81	136	190	271
180,000	85	141	198	282
200,000	88	146	205	292
250,000	94	157	220	315
300,000	100	167	234	335
350,000	106	176	247	352
400,000	111	184	258	368
450,000	115	192	268	383
500,000	119	198	278	397
600,000	127	211	295	422
700,000	133	222	311	444
800,000	139	232	325	464
900,000	145	241	338	483
1,000,000	150	250	350	500

Table 7-34. Distance to Protect Against Ground Shock from Underground Storage

Weight (lbs)	$2.1CW^{4/9}$	D_{ig}/f_g $11.1CW^{4/9}$	$12.5CW^{4/9}$	D_{ig} $5.8CW^{1/3}$
1,000	45	239	269	58
1,200	49	259	292	62
1,400	53	278	313	65
1,600	56	295	332	68
1,800	59	311	350	71
2,000	62	325	366	73
2,500	68	359	405	79
3,000	74	390	439	84
3,500	79	417	470	88
4,000	84	443	499	92
4,500	88	467	525	96
5,000	93	489	551	99
6,000	100	530	597	105
7,000	107	568	640	111
8,000	114	603	679	116
9,000	120	635	715	121
10,000	126	665	749	125
12,000	137	722	813	133
14,000	146	773	870	140
16,000	155	820	923	146
18,000	163	864	973	152
20,000	171	906	1,020	157
25,000	189	1,000	1,126	170
30,000	205	1,084	1,221	180
35,000	220	1,161	1,308	190
40,000	233	1,232	1,388	198

Table 7-34. Distance to Protect Against Ground Shock from Underground Storage (Continued)

Weight (lbs)	$2.1CW^{4/9}$	D_{ig}/f_g $11.1CW^{4/9}$	$12.5CW^{4/9}$	D_{ig} $5.8CW^{1/3}$
45,000	246	1,298	1,462	206
50,000	257	1,361	1,532	214
60,000	279	1,476	4,662	227
70,000	299	1,580	1,779	239
80,000	317	1,677	1,888	250
90,000	334	1,767	1,990	260
100,000	350	1,852	2,085	269
120,000	380	2,008	2,261	286
140,000	407	2,150	2,421	301
160,000	432	2,282	2,570	315
180,000	455	2,404	2,708	327
200,000	477	2,520	2,837	339
250,000	526	2,782	3,133	365
300,000	571	3,017	3,398	388
350,000	611	3,231	3,639	409
400,000	649	3,429	3,861	427
450,000	684	3,613	4,069	444
500,000	716	3,786	4,264	460
600,000	777	4,106	4,624	489
700,000	832	4,397	4,951	515
800,000	883	4,666	5,254	538
900,000	930	4,916	5,537	560

Table 7-35. Functions of Underground Chamber Loading Density

Loading Density W (lbs/ft^3)	Ground Shock f_g (0.267 $W^{0.30}$)	Debris f_d (0.600 $W^{0.18)}$
1.0	0.27	0.60
1.2	0.28	0.62
1.4	0.30	0.64
1.6	0.31	0.65
1.8	0.32	0.67
2.0	0.33	0.68
2.5	0.35	0.71
3.0	0.37	0.73
3.5	0.39	0.75
4.0	0.40	0.77
4.5	0.42	0.79
5.0	0.43	0.80
6.0	0.46	0.83
7.0	0.48	0.85
8.0	0.50	0.87
9.0	0.52	0.89
10.0	0.53	0.91
12.0	0.56	0.94
14.0	0.59	0.96
16.0	0.61	0.99
18.0	0.64	1.04
20.0	0.66	1.03
25.0	0.70	1.07
30.0	0.74	1.11
35.0	0.78	1.14
40.0	0.81	1.17
45.0	0.84	1.19
50.0	0.86	1.21
60.0	0.91	1.25
70.0	0.96	1.29
80.0	0.99	1.32
90.0	1.03	1.35
100.0	1.06	1.37

Table 7-36 Distances to Protect Against Hard Rock Debris from Underground Storage Sites

Weight (lbs)	$C/W^{1/3}$ ($ft/lb^{1/3}$)							
	0.3	0.5	0.7	0.9	1.1	1.6	2.1	3
1000	163	180	200	205	195	145	92	62
1200	170	195	215	220	210	155	98	67
1400	185	210	230	235	225	165	105	72
1600	195	220	240	250	240	175	110	76
1800	205	230	250	260	250	180	115	79
2000	210	240	260	270	260	190	120	83
2500	230	260	290	300	290	210	135	91
3000	250	290	310	320	310	225	145	98
3500	270	300	330	340	330	240	155	105
4000	280	320	350	360	350	250	160	110
4500	300	340	370	380	360	260	170	115
5000	310	350	380	400	380	280	175	120
6000	330	380	410	430	410	300	190	130
7000	350	400	440	460	440	320	205	140
8000	370	430	470	480	460	330	215	145
9000	390	450	490	500	480	350	225	155
10000	410	470	520	520	500	370	235	160
12000	440	500	560	560	540	400	250	175
14000	470	540	580	600	580	420	270	185
16000	500	560	620	640	620	440	290	195
18000	520	600	640	680	640	470	300	205
20000	540	620	680	700	680	490	310	215
25000	600	680	740	760	740	540	340	235
30000	640	740	800	820	800	580	370	250
35000	680	780	860	880	840	620	390	270
40000	720	820	900	940	900	640	420	285
45000	760	860	940	980	940	680	440	295
50000	800	900	980	1000	980	700	460	310
60000	860	980	1050	1100	1050	760	490	335
70000	920	1050	1150	1150	1100	820	520	355
80000	960	1100	1200	1250	1100	860	560	375
90000	1000	1150	1250	1300	1250	900	580	395
100000	1050	1200	1300	1350	1300	940	600	410
120000	1150	1300	1400	1450	1400	1000	660	445

Table7-36. Distances to Protect Against Hard Rock Debris from Underground Storage Sites (Continued)

Weight (lbs)	$C/W^{1/3}$ ($ft/lb^{1/3}$)							
	0.3	**0.5**	**0.7**	**0.9**	**1.1**	**1.6**	**2.1**	**3**
140000	1200	1400	1500	1550	1500	1100	700	475
160000	1300	1450	1600	1650	1600	1150	740	500
180000	1350	1550	1650	1750	1650	1200	780	525
200000	1400	1600	1750	1800	1750	1250	800	550
250000	1550	1750	1900	2000	1900	1350	880	600
300000	1650	1900	2050	2150	2050	1500	960	645
350000	1750	2000	2200	2250	2200	1600	1000	690
400000	1850	2100	2300	2400	2300	1650	1050	725
450000	1950	2200	2450	2500	2400	1750	1100	765
500000	2050	2300	2500	2600	2500	1800	1150	800
600000	2200	2500	2700	2800	2700	1950	1250	860
700000	2350	2700	2900	3000	2900	2100	1350	915
800000	2450	2800	3100	3200	3100	2200	1400	965
900000	2600	3000	3200	3300	3200	2300	1500	1015

Table 7-37. Distances to Protect Against Soft Rock Debris from Underground Storage Sites

Weight (lbs)	$C/W^{1/3}$ ($ft/lb^{1/3}$)							
	0.2	**0.6**	**0.75**	**0.9**	**1**	**1.5**	**1.75**	**2.5**
1,000	165	200	207	198	184	91	62	30
1,200	177	216	223	213	199	98	67	32
1,400	189	230	238	227	212	105	72	34
1,600	200	243	251	240	224	110	76	36
1,800	210	255	264	252	235	116	79	38
2,000	219	266	275	263	245	121	83	40
2,500	240	292	302	288	268	133	91	43
3,000	258	314	325	311	289	143	98	47
3,500	275	335	346	331	308	152	104	50
4,000	291	354	366	350	326	161	110	53
4,500	305	371	384	367	342	169	116	55
5,000	319	388	401	383	357	176	121	58
6,000	343	418	432	413	384	190	130	62
7,000	366	445	460	440	409	202	139	66
8,000	386	470	486	464	433	214	147	70
9,000	405	493	510	487	454	224	154	74
10,000	423	515	532	509	474	234	161	77
12,000	456	555	574	548	511	252	173	83
14,000	486	591	611	584	544	269	184	88
16,000	513	624	645	617	575	284	195	93
18,000	539	655	677	648	603	298	204	98
20,000	562	684	707	676	630	311	213	102
25,000	616	750	775	741	690	341	234	112
30,000	664	808	835	798	744	367	252	120
35,000	707	861	890	851	792	391	268	128
40,000	747	909	940	898	837	413	283	136
45,000	784	954	986	943	878	434	297	142
50,000	819	996	1,030	985	917	453	311	148
60,000	882	1,074	1,110	1,061	988	488	335	160
70,000	940	1,144	1,182	1,130	1,053	520	357	170
80,000	993	1,208	1,249	1,194	1,112	549	377	180
90,000	1,042	1,268	1,311	1,253	1,167	576	395	189
100,000	1,088	1,324	1,368	1,308	1,218	602	413	197
120,000	1,172	1,426	1,475	1,410	1,313	648	445	213

Table 7-37. Distances to Protect Against Soft Rock Debris from Underground Storage Sites (Continued)

Weight (lbs)	$C/W^{1/3}$ ($ft/lb^{1/3}$)							
	0.2	**0.6**	**0.75**	**0.9**	**1**	**1.5**	**1.75**	**2.5**
140,000	1,249	1,520	1,571	1,502	1,399	691	474	226
160,000	1,319	1,605	1,659	1,586	1,477	730	500	239
180,000	1,384	1,684	1,741	1,665	1,550	766	525	251
200,000	1,445	1,759	1,818	1,738	1,619	800	548	262
250,000	1,584	1,927	1,992	1,905	1,774	876	601	287
300,000	1,707	2,077	2,147	2,052	1,911	944	648	310
350,000	1,818	2,212	2,287	2,186	2,036	1,006	690	330
400,000	1,921	2,337	2,416	2,309	2,151	1,062	729	348
450,000	2,016	2,453	2,535	2,424	2,257	1,115	765	366
500,000	2,105	2,561	2,647	2,531	2,357	1,164	798	382
600,000	2,268	2,760	2,853	2,727	2,540	1,254	860	411
700,000	2,416	2,940	3,039	2,905	2,705	1,336	917	438
800,000	2,552	3,105	3,210	3,068	2,858	1,412	968	463
900,000	2,678	3,259	3,369	3,220	2,999	1,481	1,016	486

Table 7-38. Values for Ratio, $D_{HYD}/V_E^{1/2.8}$

V_E (ft^3)	$D_{HYD}/V_E^{1/2.8}$					
	Effective Hydraulic Diameter, D_{HYD} (ft)					
	10	15	20	25	30	35
1,000	0.8483	1.2725	1.6967	2.1209	2.5450	2.9692
2,000	0.6623	0.9935	1.3246	1.6558	1.9869	2.3181
3,000	0.5730	0.8595	1.1460	1.4326	1.7191	2.0056
4,000	0.5171	0.7756	1.0341	1.2927	1.5512	1.8097
5,000	0.4775	0.7162	0.9549	1.1937	1.4324	1.6711
6,000	0.4474	0.6710	0.8947	1.1184	1.3421	1.5658
7,000	0.4234	0.6351	0.8468	1.0585	1.2702	1.4819
8,000	0.4037	0.6055	0.8074	1.0092	1.2110	1.4129
9,000	0.3871	0.5806	0.7741	0.9676	1.1612	1.3547
10,000	0.3728	0.5591	0.7455	0.9319	1.1183	1.3047
20,000	0.2910	0.4365	0.5820	0.7275	0.8731	1.0186
30,000	0.2518	0.3777	0.5036	0.6295	0.7554	0.8812
40,000	0.2272	0.3408	0.4544	0.5680	0.6816	0.7952
50,000	0.2098	0.3147	0.4196	0.5245	0.6294	0.7343
60,000	0.1966	0.2949	0.3931	0.4914	0.5897	0.6880
70,000	0.1860	0.2791	0.3721	0.4651	0.5581	0.6511
80,000	0.1774	0.2661	0.3548	0.4434	0.5321	0.6208
90,000	0.1701	0.2551	0.3401	0.4252	0.5102	0.5952
100,000	0.1638	0.2457	0.3276	0.4095	0.4914	0.5733
200,000	0.1279	0.1918	0.2557	0.3197	0.3836	0.4476
300,000	0.1106	0.1660	0.2213	0.2766	0.3319	0.3872
400,000	0.0998	0.1497	0.1997	0.2496	0.2995	0.3494
500,000	0.0922	0.1383	0.1844	0.2305	0.2766	0.3226
600,000	0.0864	0.1296	0.1727	0.2159	0.2591	0.3023
700,000	0.0817	0.1226	0.1635	0.2044	0.2452	0.2861
800,000	0.0779	0.1169	0.1559	0.1948	0.2338	0.2728
900,000	0.0747	0.1121	0.1495	0.1868	0.2242	0.2615
1,000,000	0.0720	0.1080	0.1439	0.1799	0.2159	0.2519
2,000,000	0.0562	0.0843	0.1124	0.1405	0.1686	0.1967
3,000,000	0.0486	0.0729	0.0972	0.1215	0.1458	0.1701
4,000,000	0.0439	0.0658	0.0877	0.1097	0.1316	0.1535
5,000,000	0.0405	0.0608	0.0810	0.1013	0.1215	0.1418

Table 7-39. Scaled IBD for Airblast without Mitigating Devices[1,2,3]

NEW (lbs)	$r(0)/(D_{HYD}/V_E^{1/2.8})$					
	Horizontal Angle from Centerline Axis (Degrees)					
	0	30	60	90	120	180
1,000	1,545	1,290	895	621	452	273
2,000	1,979	1,653	1,146	795	579	349
3,000	2,287	1,910	1,325	919	669	404
4,000	2,535	2,117	1,468	1,019	741	448
5,000	2,745	2,292	1,590	1,103	803	485
7,000	3,096	2,585	1,793	1,244	905	547
10,000	3,516	2,936	2,037	1,413	1,028	621
20,000	4,504	3,761	2,609	1,810	1,317	795
30,000	5,206	4,347	3,015	2,092	1,522	919
40,000	5,769	4,818	3,341	2,319	1,687	1,019
50,000	6,247	5,217	3,619	2,511	1,827	1,103
70,000	7,045	5,883	4,081	2,831	2,060	1,244
100,000	8,002	6,683	4,635	3,216	2,340	1,413
200,000	11,977	10,002	6,937	4,813	3,502	2,115
250,000	13,633	11,384	7,896	5,479	3,987	2,407
500,000	17,462	14,582	10,114	7,018	5,106	3,083
700,000	19,691	16,444	11,406	7,914	5,759	3,477
1,000,000	22,367	18,678	12,955	8,989	6,541	3,949
2,000,000	28,649	23,925	16,594	11,514	8,378	5,059
3,000,000	33,113	27,652	19,180	13,308	9,684	5,847
5,000,000	39,740	33,187	23,018	15,972	11,622	7,017
7,000,000	44,815	37,424	25,957	18,011	13,106	7,913
10,000,000	50,903	42,509	29,484	20,458	14,886	8,988

NOTES:

1. IBD for airblast without airblast mitigating devices:

$r(\theta)/(D_{HYD}/V_E^{1/1.4}) = 149.3 \cdot \{W^{0.5}/[Pso(1+(\theta)/56)^2)]\}^{1/1.4}$ (English Units)

where: Pso = 1.2 psi $W \leq 100{,}000$ lbs

Pso $=44.57 \cdot W^{-0.314}$ $100{,}000 \leq W \leq 250{,}000$ lbs

Pso =0.9 psi W>250,000 lbs

2. Reduce IBD by 50% when portal barricade configured IAW COE Definitive Drawing 421-80-04 is used.

3. Reduce IBD as follows when a closure plug designed IAW COE Definitive Drawing 421-80-04 is used:

Reduction (%) = 0%W< 0.0625 lb/ft^3

Reduction (%) = 50 $\log^{10(}$16.02.w) 0.0625 <w<0.625 lb/ft^3

Reduction (%) = 50%W>0.625 lb/ft^3

Table 7-40. Q-D Criteria for OSHA/NFPA Class I-III Flammable and Combustible Energetic Liquids Storage in Detached Buildings or Tanks

Quantity	IBD/PTR (ft)	ILD/Aboveground Intermagazine Distance (IMD) (ft)
Unlimited[3]	50[4, 5]	Note 6

NOTES:

1. Other guidelines for diking, tank or container construction, tank venting, and facility construction apply (except for Class III B combustible liquids, e.g., Otto Fuel II). Refer to 29 CFR 1910.106 and NFPA 30, Flammable and Combustible Liquids Code for further guidance on liquid storage and fire protection. Refer to SG340-AA-MMA-010 for further guidance on diking, storage, and spill containment of OTTO fuel II.

2. Refer to 29 CFR 1910.106 and NFPA 30, Flammable and Combustible Liquids Code for definition and explanation of OSHA/NFPA classification of flammable and combustible liquids.

3. Guidelines on interior storage configuration (for container storage inside buildings) also apply with the following exceptions: (a) If the storage building is located at least 100 ft from any exposed building (under the direct jurisdiction of a fire protection organization) or property line; or (b) If the storage building is located at least 200 ft from any exposed building (not under the direct jurisdiction of a fire protection organization) or property line; or (c) for combustible liquids that will not exhibit sustained burning in bulk form, e.g., Otto Fuel II, as determined through ASTM D 92 Standard Test Method for Flash and Fire Points by Cleveland Open Cup or comparable testing. Refer to 29 CFR 1910.106 and NFPA 30, Flammable and Combustible Liquids Code for further guidance on liquid storage and fire protection. Refer to SG340-AA-MMA-010 for further guidance on diking, storage, and spill containment of OTTO fuel II.

4. For container storage inside of a building, IBD/PTR distances may be less than 50 ft (to a minimum of 10 ft) if the storage building is constructed of fire resistive exterior walls having an ASTM fire resistance rating of two hours or more according to ASTM Standard E119-20.

5. For large tank storage, Q-D may be 25 feet for tank capacities up to 100,000 gallons, and 37.5 feet for capacities between 100,001 and 500,000 gallons.

6. For flammable liquids container storage inside of a building, ILD/Aboveground Intermagazine Distance (IMD) is 50 feet (except as in note 4), or for adjacent incompatible oxidizer storage, distances specified for energetic liquid oxidizers (table 7-41) or oxygen (table 7-42). For flammable liquids storage in fixed or large portable tanks, ILD/Aboveground IMD is either (1) for compatible energetic liquids storage, equal to one sixth of the sum of the diameters of the two adjacent tanks, or distances specified in note 5 for adjacent container storage inside of a building; or (2) for adjacent incompatible oxidizer storage distances specified for energetic liquid oxidizers (table 7-41) or oxygen (table 7-42). Earth-covered magazines may be used to their physical capacity for storing flammable energetic liquids provided they comply with the construction and siting requirements of chapters 8 and 7, respectively, for HC/D 1.1. The earth-covered magazines must be sited for a minimum of 100 lbs of HC/D 1.1 items using tables 7-12, 7-13 and 7-14.

Table 7-41. Q-D Criteria for Energetic Liquid Oxidizer (excluding Liquid Oxygen) Storage in Detached Buildings or Tanks[1,2]

NFPA Oxidizer Class[3]	Quantity (lbs)	IBD/PTR/ILD/ Aboveground IMD (ft)
2	up to 600,000	50
--	--	--
3	up to 400,000	75
--	--	--
4[4,5]	≤ 50	75
--	70	76
--	100	79
--	150	84
--	200	89
--	300	98
--	500	114
--	700	128
--	1,000	147
--	1,500	175
--	2,000	200
--	3,000	246
--	5,000	328
--	7,000	404
--	10,000	510
--	15,000	592
--	20,000	651
--	30,000	746
--	50,000	884
--	70,000	989
--	100,000	1114
--	150,000	1275
--	200,000	1404
--	300,000	1607
--	500,000	1905

NOTES:

1. Quantity-distance requirements do not apply to storage of NFPA Class 2 and 3 oxidizers in approved fixed tanks.

2. Other requirements for interior storage configuration, building construction, diking, container materials, facility venting, etc. also apply. Refer to NFPA 430, Code for the Storage of Liquid and Solid Oxidizers for further guidance on oxidizer storage and fire protection.

3. Refer to NFPA 430, Code for the Storage of Liquid and Solid Oxidizers for definition and explanation of NFPA classification of oxidizers.

4. Multiple tanks containing NFPA Class 4 oxidizers may be located at distances less than those specified in the table; however, if the tanks are not separated from each other by 10% of the distance specified for the largest tank, then the total contents of all tanks shall be used to calculate distances to other exposures.

5. Notes for NFPA Oxidizer Class 4:

   (a) W < 10,0000 lbs, Distance = 149.3*W(-0.41+0.059*ln(W)).

   (b) W > 10,000 lbs, Distance = $24*W^{1/3}$

   (c) Use of equations given in (a) and (b) to determine distances for other quantities (W) is allowed.

6. NFPA 430 requires sprinkler protection to be provided for storage of greater than 2,000 pounds of NFPA Class 4 oxidizers inside of a building.

Table 7-42. Q-D Criteria for Liquid Oxygen[1, 2]

	IBD/PTR (ft)	ILD/Aboveground (IMD) (ft)
Unlimited[3]	100	100[4]

NOTES:

1. Distances do not apply where a protective structure having an ASTM fire resistance rating of at least two hours according to ASTM Standard E119-20 interrupts the line of sight between the oxygen system and the exposure. Refer to 29 CFR 1910.104 and NFPA 55 chapters 8 (Cryogenic Fluids) and 9 (Bulk Oxygen Systems).

2. Additional guidelines relating to equipment assembly and installation, facility design (diking), and other fire protection issues also apply. Refer to 29 CFR 1910.104 and NFPA 55 chapters 8 (Cryogenic Fluids) and 9 (Bulk Oxygen Systems).

3. Q-D is independent of oxygen quantity.

4. Minimum ILD/IMD distance between adjacent compatible energetic liquids storage is 50 feet.

Table 7-43. Q-D Criteria for Liquid Hydrogen and Bulk Quantities of Hydrazines[1]

Propellant Weight (pounds)	IBD/PTR		ILD/Aboveground IMD (ft)[6,7]
	Unprotected (ft)[2,3]	Protected (ft)[4,5]	
0--100	600	80	30
200	600	100	37
300	600	113	42
400	600	122	46
500	600	130	49
600	600	136	51
700	600	141	53
800	600	145	54
900	600	149	56
1,000	600	153	57
2,000	600	176	66
3,000	600	191	72
4,000	600	202	76
5,000	600	211	79
6,000	600	218	82
7,000	600	224	84
8,000	600	230	86
9,000	600	235	88
10,000	603	239	90
15,000	691	258	97
20,000	760	272	102
25,000	819	283	106
30,000	870	292	110
35,000	916	301	113
40,000	958	308	116
45,000	996	315	118
50,000	1,032	321	120
60,000	1,096	332	124
70,000	1,154	341	128
80,000	1,206	349	131
90,000	1,255	357	134
100,000	1,300	364	136
125,000	1,400	379	142
150,000	1,488	391	147
175,000	1,566	403	151

Table 7-43. Q-D Criteria for Liquid Hydrogen and Bulk Quantities of Hydrazines[1] (Continued)

Propellant Weight (pounds)	IBD/PTR		ILD/Aboveground IMD (ft)[6,7]
	Unprotected (ft)[2,3]	Protected (ft)[4,5]	
200,000	1,637	412	155
250,000	1,764	429	161
300,000	1,800	444	166
350,000	1,800	457	171
400,000	1,800	468	175
450,000	1,800	478	179
500,000	1,800	487	183
600,000	1,800	503	189
700,000	1,800	518	194
800,000	1,800	530	199
900,000	1,800	542	203
1,000,000[8]	1,800	552	207
2,000,000	1,800	626	235
3,000,000	1,800	673	252
4,000,000	1,800	708	266
5,000,000	1,800	737	276
6,000,000	1,800	761	285
7,000,000	1,800	782	293
8,000,000	1,800	800	300
9,000,000	1,800	817	306
10,000,000	1,800	832	312

NOTES:

1. Positive measures shall be taken to prevent mixing of hydrogen or hydrazines and adjacent oxidizers in the event of a leak or spill.

2. Distances are necessary to provide reasonable protection from fragments of tanks or equipment that are expected to be thrown in the event of a vapor phase explosion.

3. 10,000<W<265,000 lbs, Unprotected Distance = $28*W_{1/3}$. Also W = $(\text{Unprotected Distance}/28)_3$.

4. The term “protected” means that protection from fragments is provided by terrain, effective barricades, nets, or other physical means.

5. Distances are based on the recommended inhabited building distances given in the Bureau of Mines, Department of the Interior Report No. 5707, dated 1961, and extrapolation thereof (2 cal/cm2 on 1% water vapor curve). Curve fit of the data yields Protected Distance = $-154.1 + 72.89*[\ln(W)] -6.675*[\ln(W)]_2 + 0.369*[\ln(W)]_3$.

Also W = $\exp[311.367 - 215.761*[\ln(\text{protected distance})] + [55.1828*[\ln(\text{protected distance})]_2 - 6.1099*[\ln(\text{protected distance})]_3 + 0.25343*[\ln(\text{protected distance})_4]$.

6. ILD/Aboveground IMD distances in this column apply for adjacent compatible (ELCG LB or LC) storage; for adjacent incompatible (other ELCG) storage, use IBD distances shown in previous columns. Earth-covered magazines may be used to their physical capacity for storing hydrogen provided they comply with the construction and siting requirements of chapter 8 and 7 respectively for HC/D 1.1. The earth-covered magazines must be sited for a minimum of 100 lbs of HC/D 1.1 items using tables 7-13 and 7-14.

7. Distances are an average of 37.5% of “protected” column.

8. Extrapolations above 1,000,000 pounds extend well outside data included in Bureau of Mines Report 5707 from which the original Q-D tables were derived; however, they are supported by independent calculations and knowledge of like phenomena.

THIS PAGE INTENTIONALLY BLANK

CHAPTER 8
FACILITIES

8-1. EXPLOSIVES SAFETY SITE PLAN APPROVAL REQUIREMENTS.

8-1.1. GENERAL. Construction features and location are important safety considerations for ammunition and explosives facilities or facilities that are exposed to the damaging effects of potential explosions. The effects of potential explosions may be reduced significantly by construction features that limit the amount of explosives involved, reduce the intensity of blast overpressure or thermal radiation, or lower the quantity and range of hazardous fragments and debris. Proper separation of exposed sites reduces the risk of unacceptable damage and injuries in event of an incident. The ammunition and explosives safety standards contained in this document shall be considered minimum and greater protection shall be provided when practical. In accordance with Defense Explosives Safety Regulation (DESR) 6055.09, these standards apply to all Department of War (DoW) ammunition and explosives facilities whenever U.S. titled ammunition is in the custody of DoW civilian or military employees, and to U.S. titled ammunition in host nation facilities. These standards shall govern the siting and construction of all such facilities except those facilities meeting the criteria established in paragraph 1-2.

8-1.2. SITE PLAN REVIEW AND APPROVAL.

8-1.2.1. Policy.

a. Commanding officers of Department of the Navy (DON) shore activities where ammunition and explosives are handled, manufactured, or stored should obtain final site and general construction plan approval for new construction or modification of existing structures that are subject to explosives quantity-distance (ESQD) requirements prior to beginning construction. Final approval, or a deviation authorization, must be obtained prior to using new or modified facilities that require site and general construction plan reviews per DESR 6055.09.

b. Site plan approval requests for Navy activities will be submitted in accordance with OPNAVINST 8020.14 (series) and NOSSAINST 8020.22 (series).

(1) Naval Ordnance Safety and Security Activity (NOSSA). NOSSA will review and either approve the package or endorse the package and forward it to the Department of War Explosives Safety Office (DWESO).

(2) Marine Corps Systems Command (MARCORSYSCOM). Marine Corps activities (with the exception of limited amounts approved by NOSSA or MARCORSYSCOM will submit their site approvals to the DWESO via the appropriate chain of command contained in MCO 5100.29 Vol 8 (series). Marine Corps projects submitted to NOSSA for review will follow the same routing as Navy projects.

(3) DWESO. Determination as to whether DWESO review is required will only be made by NOSSA for Navy activities and MARCORSYSCOM for Marine Corps activities. When the qualitative siting criteria of chapter 7 cannot be met, a risk-based safety submission may be submitted per paragraph 8-1.5.

(4) Limited-Quantity Approvals. Requests for sites at which storage of or operations involving limited quantities of HC/D 1.2.2 (≤ 40 pounds NEW), HC/D 1.3 (≤ 1000 pounds NEW), and HC/D 1.4 (≤ 3000 pounds NEW) material for reasons of operational necessity will be submitted directly to NOSSA Atlantic/Pacific from NAVFAC for Navy activities and MARCORSYSCOM for Marine Corps activities for their approval provided no additional risk is imposed to personnel or existing facilities.

c. Explosives safety site approvals are required for the following cases:

(1) All new construction of facilities used for ammunition and explosive activities.

(2) Changes in the use or mission of explosives facilities that result in a modification to the established ESQD arcs or an increase in hazards. Some examples include: increasing explosives limit (100 pounds to 150 pounds) or introducing an explosive process of greater hazard (remote instead of attendant testing). If the hazard remains the same or is decreased, site approval is not required; however, the SOP must be updated to reflect the specific mission change.

(3) Downgrading an ordnance facility to an inert function, or reducing an explosives limit to remove an ESQD arc from an area to allow additional development.

(4) New construction of facilities or temporary facilities not involving ammunition and explosives that are in such proximity to ammunition and explosives as to be exposed to hazards, or for which a reasonable doubt may exist regarding possible exposure to hazards. A minimum of 110% of inhabited building ESQD arcs is established as the zone for submission; however, construction of vulnerable facilities (for example, schools, high-rise buildings, restaurants, and family housing) are of particular concern.

(5) Changes in an installation mission that expose facilities not involving ammunition and explosives to blast, fire, or fragment hazards or to potential toxic chemical release.

(6) Modification or changes to existing facilities involving ammunition or explosives, or facilities encumbered by an inhabited building ESQD arc, unless they are minor in nature and do not introduce an additional hazard. Modifications are generally defined as any project which actually constructs or adds something new which has not previously existed or which requires wholesale removal of a system or part of a facility for eventual replacement with a like or similar system.

(7) Maintenance and repair projects (other than routine) to facilities involving ammunition and explosives, or facilities at less than K18 intraline distance from a PES, unless covered by paragraph 8-1.2.1.d(4). Projects that do not alter/modify the facility, Lightning Protection System, grounding system, utilities system to include electrical, communication and security system, and/ or change the currently sited operation are to be submitted per paragraph 8-1.2.1.e.

(8) Modification of facilities currently under waiver/exemption, or for construction of a facility which will replace another facility under waiver/exemption.

(9) Dredging areas known or suspected to contain munitions and explosives of concern (MEC) and/or Material Potentially Presenting an Explosive Hazard (MPPEH). This includes dredging operations at ammunition terminal piers that are beyond the channels and turning basins routinely maintenance dredged, increase water depth, or are under existing piers used for ammunition handling, as well as other areas known or suspected to contain MEC and/or MPPEH. In addition to site approval request, these areas may require an explosives safety submission, as defined in paragraph 14-10.4.

(10) Non-DoW explosives operations conducted on DON activities.

(11) Where doubt exists concerning a project's relationship or proximity to explosives, submittal must be made to NOSSA for determination on the required approval level.

(12) Munitions responses involving the placement of explosives on a site, intentional physical contact with MEC and/or MPPEH, or ground-disturbing or other intrusive activities in areas known or suspected to contain MEC and/or MPPEH.

d. Explosives safety site approvals are not normally required in the following instances:

(1) Routine maintenance or repair work which is performed on a regular basis where workers will be present for a short time. Examples include grass mowing, tree pruning, or underbrush removal in magazine areas; minor road maintenance/repair; routine track maintenance; utility line servicing; floor and roof repairs; and painting of facilities.

(2) Casualty/emergency situations requiring minor repairs to restore the facility to its original condition.

(3) Maintenance and repair projects (other than routine) located outside the K18 intraline distance from any potential explosion site (PES), provided there is no increase in the number of personnel exposed to an explosives hazard after project completion. Examples include road repairs and re-paving; railroad track and bridge repairs; utilities repairs/ replacement; roof repairs/replacement, soil remediation (non-explosive, environmental work not requiring review by paragraph 8-1.2.1.c(12)), etc.

(4) Maintenance and repair (other than routine) and minor facility improvements to magazines, explosive operating buildings or other facilities involving explosives and ammunition when the following conditions are met:

(a) All explosives are removed from the facility.

(a) There is no change in the explosive or personnel limit of any portion of the facility as a result of the work performed.

(b) The facility or work site is not encumbered by K18 intraline distance arcs from surrounding facilities.

(c) The planned work does not involve facility elements covered by explosives safety criteria (that is, lightning protection, grounding, emergency exits, sprinkler systems) or affect the inherent safety of the structure.

(d) A work plan is reviewed by the station explosives safety officer prior to beginning work, followed by an inspection and final certification by a member of the safety office after completion.

(e) The conditions of paragraph 8-1.2.2 are observed.

(5) Maintenance dredging unless the entire ESQD arc is enlarged, a new arc is created as a result of the dredging project, or any of the other conditions defined in paragraph 8-1.2.1.c(9) are present.

(6) Minor facility improvements outside K18 intraline arcs that do not introduce additional personnel to an explosive hazard or do not involve items covered by explosives safety criteria. Examples include installation of fencing, sidewalks, lighting and utilities (that is, pipelines, powerlines, transformers, pumping stations).

(7) Airfield and waterfront maintenance and repair and utility replacement projects where the construction work can be controlled so as not to occur concurrent with explosives handling and no other ESQD arcs are present. This would apply to most Naval Stations, Supply Centers, Ship Repair Facilities and Submarine Base piers as well as aircraft cargo loading (red label areas) and combat aircraft loading areas that do not have explosives hazards constantly present.

(8) Locations on operational ranges that are used temporarily during range clearance activities for intermediate management of collected MPPEH, prior to transfer to a MPPEH processing point, when the ESQD arc remains within the range impact area and associated buffer zone.

e. Construction Worker Authorization (CWA) requests to allow temporary construction personnel within the K18 intraline distance from a potential explosion site (PES) to perform non-routine maintenance and repair work that does not alter/modify the facility, Lightning Protection System (LPS), grounding system, utilities system to include electrical communication and security system, and/or change the currently sited operation, will be submitted to Regional Explosives Safety Officer for approval, in accordance with paragraph 7-7.4.3.b. Marine Corps activities will submit CWA request to the Region via the EES portal. The examples in paragraph a and b above are not all inclusive. Good Judgment must be used to determine when explosives safety site approval is necessary.

8-1.2.2. Repairs. Repairs to ammunition and explosive facilities not requiring explosives safety review shall observe the following conditions:

a. Routine, minor repairs may be made during regular operations with the written approval of the supervisor in charge.

b. Repairs to explosives operating buildings and magazines, or equipment shall be made only by competent persons under close supervision. Only authorized, qualified employees shall repair or make changes in any electric equipment, circuit, or switches.

c. Before repairs are permitted on any equipment that may be contaminated with explosives, a certification tag signed by the facility supervisor shall be placed on the equipment certifying that all explosives have been removed from the equipment and from the surrounding area. If it has been impossible to clean some portion of the equipment or surrounding area, the situation should be noted, and the operations of maintenance personnel restricted accordingly. Maintenance personnel shall be instructed not to attempt any repairs unless proper certification is present.

d. Certain explosives operations require that spark resistant safety tools be used. If the maintenance employees must use steel tools for repair work where nonsparking tools are specified, the equipment and surrounding area shall be cleaned as specified in the preceding paragraph. In addition, all explosives must be removed, and all explosive operations in the vicinity shall be discontinued until the repair operation is finished.

8-1.2.3. Site and General Construction Plan Review Procedures. When the review of site and general construction plans is required, information must be presented to obtain both preliminary site plan approval and final safety review. Both levels of approval are attainable from one submission when the project does not involve construction or major modification of an explosives operating facility or

when all the necessary information is available at the time of the initial submission. Those projects not involving explosive operating facilities or lightning protection systems will not normally require a separate final safety review submission unless specifically requested by the DWESO. In such cases, the information requested in paragraph 8-1.2.4 is adequate. In most instances dealing with explosive operating facilities, adequate design details and a hazard assessment will not be available during the initial planning stages, thereby requiring a separate submission for final safety review. No project will be approved that requires a waiver/exemption to established criteria. When a facility cannot receive DWESO approval because of non-compliance with explosives safety criteria and for operational reasons the facility must be built, Chief of Naval Operations (OPNAV) or MARCORSYSCOM must obtain a Secretarial Certification. The procedures for such a certification are addressed in paragraph 1-6.3. Information required for site and final safety review are addressed in paragraphs 8-1.2.4 and 8-1.2.5 and NOSSAINST 8020.22 (series).

8-1.2.4. Preliminary Site Approval. The following information shall be submitted for preliminary site plan approval:

a. The preparing activity's approval of the request, along with changes, modifications, or specific precautionary measures considered necessary.

b. Drawings of site plans at a scale of 1-inch equals not more than 400 feet with the scale identified. When drawings at a smaller scale are necessary to properly reflect certain distance and structure relationships within the area surrounding a given project, a reduction in scale is acceptable. When definitive standard drawings for a building or group of buildings exist which have been reviewed by DWESO and declared acceptable, definitive drawings are not required. In these cases, only a site plan is required, noting the definitive drawings for each building or structure to be constructed.

c. Distances between the facility to be constructed or modified and other installation facilities, the installation boundary, public railways and public highways, and power transmission and utility lines.

d. Identification of all other facilities, describing their occupancy and use, within inhabited building distance of the facility to be constructed or modified.

e. Descriptions of hazardous materials or items to be in the new or modified facilities; i.e., bombs, rockets, artillery ammunition, chemical ammunition, nuclear weapons, liquid propellants, or other items requiring protective measures in accordance with this manual. Include documentation of historical test data, computer model simulation tests and engineering design analysis to determine blast, fragmentation and thermal hazards.

f. Quantities, class(es) and division(s) of ammunition, explosives, chemical ammunition, liquid and solid propellants, or other hazardous material proposed for the new or modified facility, including a breakdown by room or bay when appropriate.

g. Net explosive weights (NEWs), class(es) and division(s) of ammunition, explosives, chemical ammunition, liquid and solid propellants, or other hazardous materials in facilities located within inhabited building distance of the new or modified facility.

8-1.2.5. Final Safety Review. The following information shall be provided for final safety review:

a. Anticipated personnel limits for the new or modified facility, including a breakdown by room or bay when appropriate.

b. General details regarding dividing walls, vent walls, fire walls, roofs, operational shields, barricades, exits, types of floor finish, fire protection system installations, electrical systems and equipment, ventilation systems and equipment, hazardous waste disposal systems, lightning protection systems, all grounding systems, process equipment, and auxiliary support structures as well as general materials of construction unless approved definitive drawings are being used.

c. When protective construction is used to prevent propagation of explosions, damage to facilities, provide personnel protection, or reduce quantity-distance requirements, the following submission requirements, for the applicable structure category, must be met:

(1) Existing DWESO-approved protective construction:

(a) Provide the DWESO memorandum as an enclosure.

(b) Identify the design or drawing numbers used.

(c) Specify that the protective construction will be used in the same manner as that stated in the DWESO approval.

(d) Certify that the structure has not been altered in a manner that would reduce its integrity to provide the required level of protection and that the site specific adaptations of the design are still appropriate for the site conditions (such as, orientation to PES).

(2) Modification of an existing DWESO-approved protective construction design:

(a) Provide complete description of the structural modification, reasons for the modification, and explosives safety impact.

(b) Provide the basis of design and the protection being afforded by the modification.

(c) For preliminary design approval – provide concept structural design (during conceptual design phase or when the basis of design document has been developed); and for final approval – provide structural design (minimum 60% structural drawings) with all protective construction design modifications, including design calculations for critical structural elements; applicable electrical, grounding and lightning protection; supporting blast analysis, experimental data reports, blast design calculations and other pertinent technical information; verification that all blast analysis and design calculations are in compliance with Unified Facilities Criteria (UFC) 3-340-02 by a competent DoW blast design agency, such as the Naval Facilities Engineering and Expeditionary Warfare Center (NAVFAC EXWC) or the U.S. Army Engineering and Support Center, Huntsville (USAESCH).

(3) New protective construction design or existing structures that do not have DWESO approval:

(a) Provide the basis of design, a statement of the criteria being met (level of protection), and a description of both the design's capabilities and the basis of design.

(b) For preliminary design approval – provide concept structural design (during conceptual design phase or when the basis of design document has been developed); and for final approval – provide structural design (minimum 60% structural drawings) with all protective construction design, including design calculations for critical structural elements; applicable electrical, grounding and lightning protection; supporting blast analysis, experimental data reports, blast design calculations and other pertinent technical information; verification that all blast analysis and design calculations are in

compliance with Unified Facilities Criteria (UFC) 3-340-02 by a competent DoW blast design agency, such as the Naval Facilities Engineering and Expeditionary Warfare Center (NAVFAC EXWC) or the U.S. Army Engineering and Support Center, Huntsville (USAESCH).

d. Information on the type and arrangement of explosives operation or chemical processing equipment.

e. Topography map with appropriate contours when terrain features are considered to constitute natural barricading, or when topography otherwise influences layout.

f. A hazard analysis of risk performed in accordance with paragraph 7-7.3 shall be included.

g. Explanation of any deviations from pertinent safety standards due to local conditions.

h. Explanation of any changes that may have occurred with this project, or with any of the previous information submitted since submission of the preliminary site approval request.

i. Lightning protection design and associated scaled zone of protection drawings in plan and elevation views showing the 100-foot radius sphere in worst case placements against air terminals, masts, and catenaries protecting the building or area. Not applicable to structures solely protected by an integral system, designed in accordance with paragraph 6-4.1.4.

j. Glass type (that is, annealed, tempered), dimensions, and thickness for all windows.

8-1.2.6. Site Approval Documentation. Each activity is responsible for maintaining the following information on all potential explosion sites and exposed sites (encumbered by ESQD arcs).

a. Copies of all site approval data, including maps and the DWESO approval letter(s).

b. Activity maps that show ESQD arcs for all potential explosives sources and identify all exposed sites. These maps must be kept current with the latest site plan approvals and reconciled with the activity's master planning documentation.

c. Memorandums to file that record additional HC/Ds for site approvals issued prior to August 2009, or to show administrative reductions. Site approvals issued prior to August 2009 were generally only approved for the HC/D that created the greatest risk (i.e., HC/D 1.1), without listing the lesser hazardous HC/Ds. In those cases, all other HC/Ds may be stored/handled, provided no individual ESQD arcs (i.e., IM, IL, PTR), based on the explosive limits of each HC/D, exceed the site approved ESQD arcs. Site approvals issued after August 2009 are only valid for the assigned HC/Ds and the explosive limits in the approval letter.

8-1.2.7. Non-DoW Explosives Operations. Non-DoW explosives operations may be conducted on DON activities when the risk to the military mission has been evaluated and found acceptable, and the operations meet the criteria of 10 USC, Section 2692 and the separation requirements of table 7-30 for non-DoW explosives activities on DoW installations or table 7-31 for Launch Facilities (space or orbital) and associated explosives activities (e.g., launch vehicle integration operations and storage. Site approval reviews for non-DoW operations on DON activities will be limited to evaluation of adequate intermagazine distance between multiple PESs to ensure non-propagation and the "footprint" of the area encumbered by the inhabited building distance arcs. Where intermagazine distance is not met, the non-DoW sites will be added to determine the applicable intermagazine distance or inhabited

building distance to DON sites. Review of building design, lightning protection, etc., is not necessary unless design features are used to reduce the inhabited building arc.

8-1.3. PROTECTIVE CONSTRUCTION POLICY. The requirements for protective construction permit achievement of any calculated level of protection from explosion propagation between adjacent bays or buildings, from death or serious injury caused by incidents in adjacent bays or buildings, and from damage to vital and expensive equipment installations. Therefore, the major objectives in facility planning should be to:

a. Provide protection against explosion communication between adjacent bays or buildings and protection of personnel against death or serious injury from incidents in adjacent bays or buildings. Refer to paragraphs 7-4 and 7-9. Planning should reflect opportunities where the protection of personnel and facilities would be greatly enhanced or costs significantly reduced by having separate buildings to limit explosion propagation rather than using protective construction and separation of explosive units within one building.

b. Provide protection for vital and expensive equipment if the additional cost is warranted.

c. Harden a target building or construct a source building to suppress explosion effects. When either provides an appropriate degree of protection, these factors may be taken into account and the distances required by the standard quantity-distance tables may be reduced. Site and general construction plans for ammunition and explosives facilities that propose reduced distances based upon protective construction must be accompanied by the rationale or test results justifying the reduction when they are submitted for approval. Refer to paragraph 8-1.2.3.

8-1.4. PERSONNEL PROTECTION. Structural design and construction plans will meet requirements for protection from blast, fragment, and thermal hazards in facilities where workers are exposed to ammunition or explosives hazards during industrial, processing, manufacturing, maintenance, renovation, demilitarization and similar operations. UFC 3-340-02 contains design procedures to achieve personnel protection as required by these regulations, to protect facilities and equipment from damage by blast, fragments and debris, and to prevent propagation of explosions. Refer to paragraph 7-7 for analysis of hazard, permissible exposure, and required protective measures.

8-1.5. SAFETY ASSESSMENT FOR EXPLOSIVES RISK (SAFER). The DWESO has accepted a standardized risk assessment model that can be used in lieu of the qualitative distance tables in chapter 7. This model, titled Safety Assessment of Explosives Risk (SAFER), is available on a case-by-case basis, when both of the following conditions are met: (1) an activity can prove that siting at a specific location is essential to that activity's operation; and (2) the site does not meet the ESQD tables of chapter 7, without significant changes in the scope or location of the project. The SAFER model can only be used to evaluate the acceptance of risk for an inhabited site respective to a PES. It cannot be used to request a deviation from other criteria in this manual, such as the need for lightning protection, or the need for a barricade between two magazines.

8-1.5.1. Risk Assessment Theory. The SAFER model calculates risk in terms of a statistical expectation for loss of life from an explosives event. Three components are multiplied to estimate probability of fatality:

a. The probability of an explosives event;

b. The probability of a fatality, given an event; and

c. The expected exposure of people.

The model calculates acceptable risk by gauging DoW explosives operations against established standards for the general public hazardous situations, such as flying on a commercial airliner, or living near a nuclear power plant. This model does not replace the option of providing personnel protection by using structural design and construction as discussed in paragraph 8-1.4. Structural design of facilities is considered in this model and hardening of structures will generally enhance the probability for an acceptable solution.

8-1.5.2. Approval Process. A request for site approval on Navy activities using the SAFER model must follow an initial site approval request submitted in accordance with the procedures defined in paragraph 8-1.2.1. If, following a review by NOSSA, it is determined that the conditions defined in paragraph 8-1.5 are met, and that the parameters of SAFER are applicable to the situation, the activity will be provided with the necessary information and guidance for preparing a SAFER submission. Submission of the SAFER package will also be in accordance with paragraph 8-1.2.1, with the exception that the SAFER packages will be submitted through CNO (N4L) before submission to the DWESO for final approval. SAFER submissions for Marine Corps activities will be submitted in accordance with MCO 5100.29 Volume 8 (series), paragraph 5011.

8-1.5.3. Revalidation of SAFER Site Approvals. Because a SAFER evaluation is based on specific data available at the time of review, any change in the explosives operation or the exposed site could change the results of an analysis for a given siting. Therefore, all site approvals obtained by using the SAFER model will require a revalidation every five years. Each site approval will specify the date when an updated request is required.

8-1.6. FACILITIES BASELINING AND CORRECTIVE ACTIONS. Each installation is responsible for reviewing all PESs and ESs (encumbered by ESQD arcs) for compliance with current explosives safety criteria.

a. Facilities previously sited by the DWESO, NOSSA, NOSSA Atlantic/Pacific, or MARCORSYSCOM, that do not meet current ESQD criteria. The installation shall document in the Enterprise Explosives Safety (EES) database the authority to operate the facility such as administrative or engineering controls listed in the site approval or the authorities listed under paragraph 1-2.

b. Facilities previously sited by the DWESO, NOSSA Atlantic/Pacific, or MARCORSYSCOM that are not in alignment with the original site approval, including instances where information critical to the site approval were incorrect in the original submission or where the facility was not constructed in accordance with the original site approval, shall be addressed as described in paragraph 8-1.6.3.

8-1.6.1. Automated Site Planning Tool. The stand-up and deployment of an automated site planning tool, accepted by DWESO, at an installation, meets the requirement for review of all PESs and ESs against current ESQD criteria, provided a report of violations of current ESQD criteria, identified by the tool, is maintained with the installation's site approval documentation.

8-1.6.2. Frequency of Review. Facilities must be reviewed against current ESQD criteria in chapter 7, on an annual basis.

8-1.6.3. Facilities Found to be in Violation of Current ESQD Criteria, Out of Alignment with Existing Site Approval, or Unsited. For all facilities found to be in violation of current ESQD criteria, out of

alignment with site approval or unsited, the installation must notify NOSSA/MARCORSYSCOM upon discovery of the criteria violation to discuss corrective action necessary to continue operations and obtain site approval or appropriate deviation if criteria cannot be met.

a. For facilities where NEW limits or operations can be modified to meet current ESQD criteria, implement the corrective action necessary to meet criteria and submit for site approval as soon as practicable.

b. For facilities that cannot meet current ESQD criteria but must continue to operate in violation of explosives safety criteria due to operational necessity, a CNO event waiver must be initiated per paragraph 1-6 and include a projected timeline to secure the appropriate deviation per paragraph 1-6.

c. Requests that involve intermagazine criteria violations will not be considered, except when supported by a Fleet-level concurrence of operational necessity, structured to meet intermagazine criteria during normal operations, and the period when intermagazine violations are permitted, limited to minimum time needed to meet operational requirements.

d. For requests to continue to operate facilities at Marine Corps installations that cannot meet ESQD criteria due to operational necessity, MARCORSYSCOM will review the request for action. MARCORSYSCOM may grant a temporary authorization period to continue operations until a CMC Waiver/Exemption can be obtained in accordance with paragraph 1-6, and/or provide additional guidance for the installation to follow.

8-2. AMMUNITION AND EXPLOSIVES STORAGE FACILITIES.

8-2.1. GENERAL REQUIREMENTS. Determination whether construction of magazines is equivalent to the requirements of applicable drawings will be made by NOSSA, or in some cases, by the DWESO. Site approval requirements of this chapter must be met for all ammunition and explosives storage facilities. In addition, the following requirements and considerations shall be observed.

8-2.2. MAGAZINE SITING CONSIDERATIONS. Magazines are sited at distances from each other (intermagazine distance) so that communication of explosion from one to another is unlikely to occur. Actual siting requirements are influenced both by the construction features of the magazines and the types and quantities of ammunition and explosives they contain. Earth covered magazines designated as 7-Bar and 3-Bar, as described in paragraph 8-2.4.1 have proven capabilities for preventing explosion communication for all types of ammunition and explosives. Undefined earth-covered magazines as described in paragraph 8-2.4.2 are weaker structurally and thus have lesser capabilities for preventing explosion communication.

8-2.2.1. Isolation. Magazines must be sufficiently distant from inhabited buildings, passenger railroads, highways and navigable waterways so that the dangers and risks involved in storing explosives and ammunition are confined primarily to the magazine area. The quantity-distance tables given in chapter 7 contain distance requirements between magazines and inhabited buildings and public traffic routes.

8-2.2.2. Separation. Magazines must be separated from other magazines and buildings by the quantity-distance requirements listed in chapter 7 to prevent propagation of fires or explosions throughout an area in case of fire or explosion in any part of the area.

8-2.2.3. Area Characteristics.

a. Ammunition deteriorate in the presence of moisture or high humidity.

b. Vegetation. Vegetation shall be controlled in magazine areas. Trees, leaves, dry grass, and rubbish shall be removed regularly as described in paragraph 4-1.10.

c. Accessibility. Magazines must be provided with adequate roads as described in paragraph 8-8, or with railroad spurs.

d. Overhead transmission lines. Requirements for locating overhead transmission lines in the vicinity of magazines are covered in paragraphs 5-10.1 and 7-13.11.

e. Public utilities. To prevent damage to utilities siting requirements paragraphs 4-3.8.1 for water mains, 5-10.1 for power lines, and 7-13.10 for pipelines must be maintained.

8-2.3. MAGAZINE CONSTRUCTION REQUIREMENTS. Magazines shall be constructed of approved materials. The following design requirements for magazine construction shall be observed.

8-2.3.1. Lighting and Other Electrical Service Requirements. If provided, permanent lighting and its installation and other NAVSEASYSCOM approved electrical equipment in magazines, shall conform to the National Electrical Code, NFPA 70, for hazardous locations as defined in paragraph 5-2. Lighting fixtures shall be protected against physical damage by a suitable guard or by location. Magazines for fuel-air explosives or for hypergolic-fueled missiles/targets shall be provided with fixtures approved for the particular hazard. An approved type of disconnect switch shall be located outside and immediately adjacent to the magazine as required in paragraph 5-10. Paragraph 5-10.4.2 provides the requirements for extension lighting used in magazines. Electrical service to magazines shall comply with the requirements of paragraph 5-10. Suitable lightning protection and grounding shall be provided for the electrical services as described in paragraphs 5-4 and 6-8.2. A static ground system as described in paragraph 5-5.3 is suitable for grounding ordnance in magazines when grounding of ordnance is necessary.

8-2.3.2. Doors. All doors to magazines must be constructed of steel and must be made to fit tightly to seal the opening against dust, dirt, rain, rodents, and the direct rays of the sun. All metal doors shall be bonded to the secondary grounding system.

8-2.3.3. Floors. Magazine floors shall be of adequate strength to support the required load. They should be nonabsorbent and waterproof to prevent seepage of water or moisture from the ground underneath. Floors shall be sloped to provide adequate drainage and shall not have dips or low spots that permit the accumulation of water.

8-2.3.4. Floor Drains. Magazines that are equipped with drains and used to store liquid explosives such as MTN or TMETN, or wet explosives such as PNC, RDX, or HMX; flammable liquids such as BDNPF-A, or liquid propellants such as OTTO fuel shall have the drains sealed on the inside of the magazine. This will prevent any chemical that may leak from storage containers or weapons from contaminating the area outside the magazine. The drain seals shall be removable for cleaning and to enable the magazine to be used for the storage of other ammunition and explosives. Spill containment kits suitable for the chemical being stored shall be available at the magazine whenever handling operations are conducted in the magazine.

8-2.3.5. Ventilators. Each magazine shall be provided with ventilators well baffled and screened to keep out sparks and fire unless specifically identified as not being required in the site approval. Elimination of ventilators is dependent on the hazards associated with the material being stored in the

magazine. Magazines whose contents can create a lethal or explosives atmosphere if they spill or leak must be equipped with leak detection or air sampling instrumentation and mechanical exhaust systems to mitigate personnel hazards prior to magazine entry. All ventilators must be inspected frequently and kept in good working order. Flappers with fusible links are no longer required on magazines. Existing Flappers on sidewalls and in ceilings of magazines must be secured with a fusible link (with a limit of 160/165° F) in compliance with Underwriters' Laboratory (UL) or Factory Mutual Systems approved or be secured in an open position, otherwise the flapper can be completely removed. All ventilations must be kept free of corrosion and debris. All metal ventilators shall be bonded to the secondary grounding system. In addition, a grid or other suitable device shall be installed immediately below (on ceiling ventilators) or behind (on sidewall ventilators) in accordance with OPNAVINST 5530.13 (series) to prevent access to the magazine by removal of the ventilator.

8-2.3.6. Temperature Control Equipment.

8-2.3.6.1. Ventilator Arrangement. Magazine ventilators connect the interior of the magazines with the outside atmosphere by means of ducts. Ventilators shall be arranged to connect only the space between the ceiling and the roof with the outside air.

8-2.3.6.2. Maximum/Minimum Thermometers. Maximum and minimum thermometers have been installed in many magazines, however, there is no requirement to install thermometers in new or existing magazines unless they are special magazines designated for storage of items requiring environmental control.

8-2.3.6.3. Special Environment Control Equipment. This type of equipment is installed to control the environment (temperature and humidity) of magazines in which items requiring controlled conditions are stored. Refer to paragraph 11-2.5.1 for requirements regarding control system monitoring.

8-2.3.7. Security Alarm Systems. Security alarm systems, if used, shall meet the criteria of electrical equipment approved for use in hazardous (classified) locations and the conditions of the intended operation as prescribed in chapter 5. See OPNAVINST 5530.13 (series) for additional specific guidance/requirements regarding security systems. The electrical wiring and components of the system installed shall be appropriate for the hazardous (classified) locations defined in paragraph 5-2. This installation may be in the form of explosion proof fixtures or intrinsically safe installation. The length of power lines inside the magazine shall be kept to a minimum. The last 50 feet of any electrical lines to the system components at a magazine must be run underground. Likewise, all system components must be bonded to the lightning protection system of the magazine. Surge suppression shall be provided for the electrical system to prevent a lightning strike from traveling along a power or signal line into the magazine.

8-2.4. TYPES OF MAGAZINES. It is not practical to describe all types of magazines in this manual. Therefore, only selected types are described. More complete descriptions, details, and information on magazine designs may be obtained from Naval Facilities Engineering Systems Command Atlantic (NAVFAC LANT), Planning Design and Construction (PDC4).

NOTE

Earth-covered magazines constructed to designs approved by the DWESO based on satisfactory survival following a full-scale proof test or by analytical and model test comparison with proven types are certified as 7-Bar or 3-Bar magazines. They may be sited at the minimum intermagazine distances permitted in tables 7-12 and 7-13. Specified quantity-distance requirements for those earth covered magazines apply, however, only when they will not be weakened structurally to the extent that they could not be expected to prevent explosion communication. A current listing of magazine designs designated by the DWESO as 7-Bar or 3-Bar are listed in DWESO Technical Paper 15, "Approved Protective Construction." Table 4-1 of Technical Paper 15 lists the 7-Bar and 3-Bar earth-covered magazines approved for new construction. Earth-covered magazines not listed in Technical Paper 15 will be treated as undefined until a structural analysis is performed to show that the magazine qualifies for another strength designator, or support documentation is provided to show the magazine had been approved previously by the DWESO with a different strength designator. DWESO approval is required prior to any change in an earth-covered magazine's structural strength designator. Many existing magazines at Naval and Marine Corps activities are of undefined design.

8-2.4.1. Earth-Covered Magazines (ECM). The primary objective of an earth-covered magazine is to provide protection for its assets. To qualify for the default intermagazine distances in tables 7-12, 7-13 and 7-14, a magazine, acting as an exposed site (ES), must not collapse. Substantial plastic deformation of the magazine may occur. However, deflections should be limited within the air gap around the stored assets so that the deformed structure exit doors do not strike the contents. Due to their extreme sensitivities, special protective precautions must be taken for primary explosives materials.

a. Default intermagazine siting criteria for ECMs are listed in tables 7-12, 7-13 and 7-14. Magazines with headwall and blast door hardness of "7-Bar", a "3-Bar", and "Undefined" are shown. All ECMs in tables 7-12, 7-13 and 7-14 have the same earth cover requirements.

(1) Design load for rear walls, arches, and roofs. The barrel and rear wall of an arch-shaped ECM and the rear and side walls of a flat-roofed ECM must be designated for conventional (live, dead, snow, etc.) loads. Design of the roof of a flat-roofed ECM must consider conventional (live, dead, snow, etc.) and blast-induced loads. The head wall and door of an ECM must be designed with consideration for blast-induced loads.

(2) Design load for head walls and doors. The expected blast load on the head wall and doors of an ES ECM oriented side on to the side of a PES at a $1.25W_{1/3}$ distance (ft) is a triangular pulse of 3 bars (45 psi) an impulse of $11.3W_{1/3}$ psi-ms ($1.0Q_{1/3}$ bar-ms). The expected blast load on the head wall and doors of an ES ECM oriented head on to the rear of a potential explosion site (PES) at a $2W_{1/3}$ distance (ft) is a triangular pulse of 7 bars (100 psi) and impulse of $13.9W_{1/3}$ psi-ms ($1.23Q_{1/3}$ bar-ms). The expected blast load on the roof of a flat-roofed ES ECM oriented rear-on to the front of a PES at a distance of $2W_{1/3}$(ft) is a triangular pulse with peak overpressure of 108 psi (7.5 bars) and impulse of $19W_{1/3}$ psi-ms ($1.7Q_{1/3}$ bar-ms).

b. ECMs certified as 7-Bar, may be sited for NEWs up to 500,000 pounds in accordance with tables 7-12, 7-13 and 7-14.

c. ECMs whose headwalls and blast doors have hardnesses of 3-Bars may be sited in accordance with the appropriate columns in tables 7-12, 7-13 and 7-14 for NEWs up to 500,000 pounds. Request for verification of magazines as 3-Bars must be made to NOSSA. Requests must provide headwall thickness, door type and thickness, and general drawings showing construction materials and dimensions.

8-2.4.1.1. Certain ECMs, aboveground magazines and containers have been approved with reduced NEW and/or reduced Q-D and these are also listed in DWESO Technical Paper 15. Use of these structures/containers requires that their use and siting meet all conditions/restrictions specified in the design and approval documentation, as described in DWESO Technical Paper 15.

8-2.4.2. Undefined Earth-Covered Magazines. ECMs in the following list, or ECMs that have equivalent hardness to those in the list, may be sited as magazines of undefined hardness for NEWs up to 500,000 pounds in accordance with tables 7-12, 7-13 and 7-14. Presently approved sitings for explosives weights not exceeding 250,000 pounds remain valid. Future sitings must reflect the appropriate criteria in tables 7-12, 7-13 and 7-14.

a. Any ECM of undefined or unknown strength.

b. Magazines constructed in accordance with NAVFAC drawings 649602 through 649605, 793748, and 803060.

8-2.4.3. Magazines Currently in Navy Use. Magazines at naval ammunition storage activities are of various sizes and types of construction. Magazines are classified depending on their design or construction as aboveground, arch-type (igloo), box-type, earth-covered, or barricaded. Existing magazines described by definitive drawings are approved for storage of ammunition and explosives. The following represent several types found at most activities:

a. Keyport Type. Prefabricated concrete construction, earth-covered, and arch-shaped. It has interior floor dimensions of 6 feet by 8 feet 8 inches. The height of the arch is approximately 6 feet.

b. Corbetta Type. Constructed of concrete and is similar to the Keyport type, but is “beehive” or “dome” shaped.

c. Gallery Type. Tunnel or cave used for storing ammunition and explosives. Specific Q-D standards are provided in paragraph 7-14.

d. Multiplate Steel Arch-Type Magazines. Structures of this type must be equivalent in strength to those shown on NAVFAC Mandatory Standard drawings 1059128, 1059130, 1059132, 1069906 (Category Code 422-45), 1355460-61; or OCE drawing OCE 33-15-73 (oval 1-gage steel arch) for all quantities of explosives up to 500,000 pounds. (These drawings have been retired and are no longer used for construction.) The earth fill or earth cover between steel-arch magazines may be either solid or sloped in accordance with the requirements of other construction features, but a minimum of 2 feet of earth cover must be maintained over the top of each magazine and a minimum slope of 2 feet horizontal to 1-foot vertical starting directly above the spring line of each arch must be maintained.

e. Temporary Arch-Type Magazines. Fabricated from steel and covered with earth, adopted for temporary outlying overseas stations and some air stations for the storage of all types of ammunition or explosives.

f. Ready Service Magazines. When shore establishments require certain types of ammunition to be stored in a ready service condition in order to reduce the arming time, the ammunition may be stored in designated ready service magazines. However, applicable explosive quantity-distance criteria must be applied for the type and amount of material stored.

g. Ready Service Lockers. Generally used to store small quantities of belted or boxed small arms ammunition, certain pyrotechnics, and similar material that present fire, but no blast, hazard. Ready service lockers may be located in hangers or arming areas provided that construction and location are approved by NOSSA or NOSSA Atlantic/Pacific and are compatible with the regulations of the commands concerned. Approval of proposed locations generally is granted on the basis of operational necessity. Requests for siting of ready service lockers and magazines shall be made in accordance with paragraph 8-1.2 of this manual. Refer to paragraph 11-9.1 for information regarding recommended inspection policy.

h. Portable Magazines. Commercially built pre-engineered magazines may be used for storage of all HC/Ds of ammunition or explosives, although their application is most efficient for storage of HC/D 1.3 and 1.4 material. Commercial literature or specifications on the magazines do not qualify the magazines for a particular type storage or explosive limit. The quantity distance criteria of chapter 7 and siting requirements of paragraph 8-1.2 must be applied. The term “portable” only denotes a type of magazine. Once a magazine has been sited, its location cannot be changed without resubmission for site approval.

i. Triple-Arch. The concrete triple-arch, earth-covered magazine was designed to economize uses of critical material and to provide flexibility of stowage assignments. When combined, the arches constitute a single magazine. The standard floor size of each arch is 25 feet by 80 feet, giving a total usable floor space of approximately 3,650 square feet exclusive of aisle and inspection space. The arches are usually separated at least 10 feet from each other at the floor and the space between is filled with earth. Storage in the three barrels may be mixed so long as the requirements of the storage compatibility mixture chart (see NAVSEA SW020-AC-SAF-010, Table 2-7 and paragraph 2-4) are met within each individual barrel. ESQD arcs, magazine separation distances, etc., will be based on the total NEW stored in the three barrels, unless there is adequate separation between the barrels to meet K1.25 (side-side earth-covered magazine separation distance). In this case, each barrel could be sited as an individual magazine. The exterior of the arch and the rear wall generally are covered by an earth fill with a minimum thickness of 2 feet.

j. Hypergolics Stowage Ashore. Hypergolically fueled ordnance components require dedicated storage. Ordnance units/components containing hypergolic fuels may be stored in magazines ashore. The lower door vents, or lower front bulkhead vents in magazines may be used for leak detection devices. If no lower vents exists on the front of a magazine, a standard sized “sniffer tube” with threaded cap may be welded to the magazine door approximately 3 feet above the deck if deemed necessary for the hypergolic fuels being stored.

k. Explosive Ordnance Disposal (EOD) Ready Stowage Lockers. Commercially-built pre-engineered magazines can be used in conjunction with pumice-filled boxes to store EOD Quick Response Kits, without the need to apply conventional ESQD requirements of chapter 7. The lockers must be constructed in accordance with Sam Nally Shop Inc. Drawing 104 (001-004) and the eight pumice-filled boxes manufactured by the Ordnance Evaluation Section of Naval Air Weapons Center,

China Lake. Use of the Ready Stowage Lockers must be within the parameters of the Navy EOD Quick Response Ready Stowage Locker (RSL) System User Guide. While no ESDQ arcs are applied to this approved storage configuration, the following conditions must be maintained:

(1) Site approval will be requested in accordance with paragraph 8-1.2, to include any structural details that would be considered in reducing personnel separation requirements.

(2) No permanent personnel can be assigned in the same room with the RSL. A minimum 30 feet separation will be maintained to permanent or unrelated personnel. The distance can be reduced if substantial walls (such as concrete or brick) exist between the two areas.

(3) A limit of eight pumice-filled boxes are permitted on the floor of each RSL. Stacking is prohibited.

(4) No other explosive items, outside those listed in the user guide, are authorized for storage under the conditions of reduced ESQD arcs.

(5) The magazine must be grounded in accordance with paragraph 6-8.2.2.1.

l. Reinforced Concrete, Arch-Type ECM.

m. Earth-Covered, Corrugated Steel, Arch-Type Magazines.

n. NAVFAC Box-Type A through F and M ECM. These magazines may be sited as 7-Bar ECM with NEWs ranging from 350,000 pounds to 500,000 pounds.

8-2.4.3.1. Reduced Quantity-Distance (Q-D) Magazines. There are several commercial magazines available that have been approved for use by the DWESO with reduced Q-D arcs. These magazines are listed in DWESO TP-15 and have various unique restrictions specified on the type of explosive material that can be stored, the type of operations permitted at/in the magazine, minimum required inhabited building distance (IBD) arcs, and recommended fragment arcs to minimize exposure. Common magazines (containers) include GOLAN, NABCO, and Canine Explosive Training Aid Storage Magazine (CETASM). The minimum separation and protection requirements for privately owned vehicles (POV) in paragraph 7-13.13, overhead electrical power lines in paragraph 5-10.1.b, and applicable fire protection requirements of chapter 4 still apply. Government vehicle parking, as well as fuel containers and fueled motors (for example, outboard motors, all-terrain vehicles) must be maintained beyond 10 feet from these magazines. Because of the smaller distances associated with these type magazines, more detailed maps and building details are required when submitting site approval requests.

8-2.4.4. Open Storage (Barricaded Module) Sites. Open storage sites are undesirable. Even when determined to be necessary, they are considered a temporary expedient appropriate for operational areas and contingency locations and are not to be employed in place of standard methods for long term storage unless specifically authorized by NOSSA. Requests for an open storage site shall include information as to the necessity for open storage, the length of time the storage will be required, the proposed locations, and the type and quantity of ammunition involved.

8-2.4.4.1. As depicted in figure V2.E5.F3. in DESR 6055.09 Volume 2, a module is a barricaded area comprised of a series of connected cells with hard surface storage pads separated from each other by barricades. A light metal shed roof or other lightweight fire retardant cover may be used for weather protection for individual cells. When fire retardant tarpaulins are used for cover, adequate ventilation

between the tarpaulin and the stored ammunition shall be provided. Heavy structures (reinforced concrete, dense masonry units) or flammable material will not be used.

8-2.4.4.2. The maximum NEW permitted to be stored within each cell is 250,000 pounds (total of the explosives fill of all HC/D 1.1 ammunition).

8-2.4.4.3. Open storage sites can be separated from one another by the distances specified in table 8-1 and from other magazines by the HC/D 1.1 intermagazine distances specified in Tables 7-13 and 7-14. Quantity-distance relationships between the cells of a module and all other targets shall be determined in the normal manner on the basis of the NEW in the single cell controlling the measurement.

NOTE

Open storage sites not meeting the requirements of barricaded modules shall be regarded as aboveground magazines and the quantity-distance requirements specified for such magazines shall be applicable for the hazard classification, type, and amount of material involved.

Table 8-1. Intermagazine Separation for Barricaded Storage Modules for Mass-Detonating Explosives

Net Pounds of Explosives	Minimum Explosives-to-Explosives Distance in Feet (Barricaded) Between:	Barricade Height Based Upon Storage Pad Size*	
	Cells and Modules $D = 1.1W^{1/3}$	Cell Storage Pad Size (Width or Depth), in Feet	Minimum Height of Barricade Above Top of Stack in Feet
Column 1	**Column 2**	**Column 3**	**Column 4**
50,000	40	30	2
100,000	50	30	2
125,000	55	30	2
150,000	60	30	2
175,000	60	30	2
200,000	65	30	2
200,000	65	40	$2^{1/2}$
225,000	65	40	$2^{1/2}$
250,000	70	40	$2^{1/2}$
250,000	70	50	3

*The barricade height above the explosives stack shown in column 4 will be increased 6 inches for each 10-foot increase in width or depth of the pad size shown in column 3.

8-2.4.4.4. Sites for open storage shall be carefully chosen to avoid exposure to power lines and radio frequency (RF) radiation. Ammunition shall not be located immediately adjacent to reservoirs, or sewer lines and must meet required separation distances defined in chapter 7. The site should be level and located where there is good surface drainage. Natural barricades, if present, should be used wherever necessary. All excess vegetation and combustible material shall be removed from open storage sites and within a radius of 50 feet of such sites when ammunition and explosives are present. Combustible dunnage or other flammable material will not be stored in, or within 100 feet of modules.

8-2.4.4.5. When ammunition or explosives are stored in the open, security regulations discussed in paragraph 2-2 must be met and the items must be protected against deterioration and loss of stability. Items authorized for storage in barricaded, open storage modules are listed in paragraph 11-5.1.

8-2.4.4.6. Cell storage pad size may vary as required to accommodate stocks within the limits specified in table 8-1. Storage pads shall be hard surfaced, if possible, in order to lessen the effects of earth shock from an accidental explosion. No restrictions are imposed upon the arrangement of cells within a module or upon the arrangements of groups of modules, except that cell openings may not face toward each other unless they are barricaded or meet the standard quantity-distance criteria for unbarricaded, aboveground magazines.

8-2.4.4.7. All barricades used in forming the module and its cells shall meet the requirements specified in paragraph 8-2.5 below. Minimum barricade height required above the top of the stack is influenced by the width or length of the stack (storage pad size) and the distance between the stack and the top of the barricade. Heights in table 8-1 represent the minimum requirement for barricade locations based upon storage pad sizes and separations shown. When feasible, barricade heights should be increased. The centerlines of barricades between cells of the module shall be located at a point halfway between adjacent munitions storage pads. Back and end (outside) barricades shall be located at the same distance from the pads as those between the cells. Maximum advantage shall be taken of natural barriers existing in the topography when siting these modules. If natural barriers substitute for a portion of the module barricade, the protection provided shall be at least equivalent to that of the barricade.

8-2.5. BARRICADES AND EARTH COVER FOR MAGAZINES. Properly constructed barricades or undisturbed natural earth are effective means for protecting ammunition and explosives, structures, or operations against high velocity, low angle fragments although the barricades may be destroyed in the process. Since such fragments move along ballistic trajectories rather than straight lines, reasonable margins in barricade height and length must be provided beyond the minimum dimensions that block lines of sight. Barricades also provide limited protection against blast in the immediate vicinity. If the barricade has sufficient dimensions and is located close enough to the exposed site, significant reduction in shock loading to selected areas of the exposed site may be realized as discussed in paragraph 8-2.5.2.2. They do not provide any protection against high angle fragments and are ineffective in reducing the blast pressure in the far-field area (inhabited building or public traffic route distance).

8-2.5.1. Barricade Requirements. The slope of existing barricades shall not be steeper than 1½ horizontal to 1 vertical. Barricades on or near facilities constructed in the future should have a slope of 2 horizontal to 1 vertical in order to reduce erosion and facilitate maintenance. Protection is considered effective when earth barricades meet the following requirements:

8-2.5.1.1. Barricade Size and Orientation. The location, height, and length of a barricade to prevent prompt propagation due to high-velocity, low-angle fragments shall be determined as follows:

a. Location. The barricade may be placed anywhere between the PES and the ES; however, placing it closer to either the PES or ES will provide slightly greater asset protection. For explosive stacks of different heights (elevation), the location shall determine the barricade's height.

b. Height. To determine the required barricade height:

(1) Establish a reference point at the top of the far edge of one of the two ammunition and explosives stacks between which the barricade is to be constructed. When both stacks are of equal height, the reference point may be established on either stack. If the tops of the two stacks are not of equal height (elevation), the reference point shall be on the top of the lower stack.

NOTE

To preclude building excessively high barricades between ammunition and explosives stacks, of different height (elevation), the barricade should be located as close as possible to the lower stack (see figure 8-1).

(2) Draw a line from the reference point to the highest point of the other stack (line-of-sight).

(3) The barricade's height shall be such that the entire width of the barricade crest is at least 1 foot (0.3 meters) above the line-of-sight established in paragraph (2) above.

NOTE

The barricade height shall be measured at the time of construction and at intervals throughout the life of the barricade to ensure that the specified thickness and height of the barricade are maintained. If the specified thickness and the height of the barricade are not maintained, the ammunition and explosives stack shall be reduced as necessary or the ammunition and explosives stacks shall be resited appropriately. Consideration should be given to making the barricade higher than required for safety purposes in order to account for accuracy of storage practices regarding ammunition and explosives stack heights, potential mission changes (requiring higher ammunition and explosives stacks), and barricade settling, erosion, etc. that could seriously degrade ammunition and explosives storage capability.

(4) When there is no acceptor stack at the ES, the height of the barricade shall be determined using the height of the highest personnel location (for example, 6 feet from the highest personnel floor in ES) in place of the height of the acceptor stack in paragraphs 8-2.5.1.1.b(1) through 8-2.5.1.1.b(3).

c. Length. The barricade's length shall be determine as shown in figure 8-1.

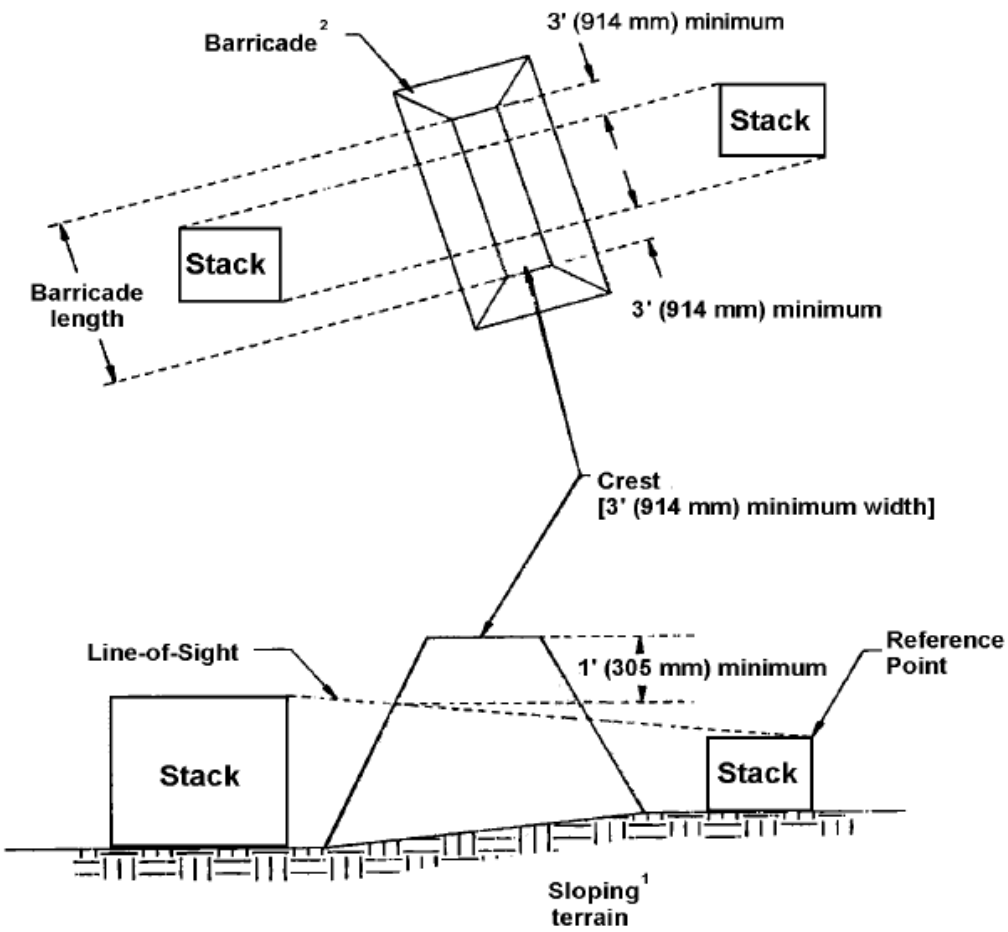

Notes:
1. This illustration is for sloping terrain; however, a similar approach is used for level terrain.
2. Barricade must meet construction and siting criteria of paragraph 8-2.5.1.1.

Figure 8-1. Determination of Barricade Length and Height

8-2.5.2. Location of Barricades.

8-2.5.2.1. Fragmentation Mitigation. The distance between the foot of the barricade and the stack of ammunition or explosives, or buildings containing explosives, is necessarily a compromise. The smaller the distance, the less the height and length of the barricade required to obtain proper protection. On the other hand, it may be essential to make the distance great enough to provide access for maintenance and vehicles. If it is not practical to locate the barricades adjacent to the ammunition or explosives, the barricades instead may be located adjacent to the facility to be protected.

8-2.5.2.2. Overpressure mitigation. General procedures to predict pressure mitigation versus barricade design and location have not been developed. However, based on direct experimental work, the over pressure loading on a surface area shielded by a barricade is reduced by 50% when the following length, height and location conditions are satisfied and applicable to note 4 of table 7-12.

a. Location. The barricade's standoff must be within two barricade heights of the protected area.

b. Height. The top of the barricade must be at least as high as the top of the protected area.

c. Width. The width of the barricade must be at least two-times the width of the protected area.

8-2.5.3. Inspection of Barricades. Barricades shall be inspected periodically for conditions, such as settling, erosion, or other deterioration, which may reduce their effectiveness. Any such conditions noted shall be reported to the officer or supervisor in charge. Deficiencies shall be corrected as soon as practical.

8-2.5.4. Magazine Barricades. The standard covering on reinforced-concrete, earth-covered magazines constitutes a barricade, except at the door end, and is effective for reducing the damaging effects of explosions, fire, and fragments. When a reinforced-concrete, earth covered magazine is barricaded at the door end, the magazine is considered barricaded in all directions. When a reinforced-concrete, earth-covered magazine is unbarricaded at the door end, unbarricaded distances (as given in the quantity-distance tables in chapter 7) shall be used in separating the magazine from structures and facilities located in front of the magazine and within an area bounded by lines drawn 60° on both sides of the magazine centerline with the vertex of the angle placed so that the sides of the angle pass through the intersection of the headwall and sidewall. See requirements for intermagazine separations, paragraph 7-8.1.5.3, regarding the 120° cone (60° to each side). The magazine shall be considered barricaded in all other directions and the appropriate regulations for barricaded distance apply. For cave or tunnel type magazines, another hazard area is to be considered. The area bounded by lines drawn from the center of the door and inclined upward at an angle of 30° from a line perpendicular to the magazine door would be subject to destructive blast effect and possible fragment hazard. Blast and fragment deflection from facing ravine and canyon walls or other nearby high natural terrain would pass through the delineated area. Refer to underground storage, paragraph 7-14.

8-2.5.5. Earth Cover for Magazines and Barricades. Material for earth cover over magazine and for barricades shall be reasonably cohesive (solid or wet clay or similar types of soil may not be used as they are too cohesive), free from deleterious organic matter, trash, debris, and stones heavier than 10 pounds or larger than 6 inches in any dimension. The larger stones, meeting the above criteria, shall be limited to the lower center of fills and shall not be used for earth cover over magazines. Compaction and surface preparation shall be provided, as necessary, to maintain structural integrity and avoid erosion. When it is impossible to use a cohesive material, due to sandy soil for example, the barricade or the earth cover over magazines shall be finished with a suitable material (for example, geotextiles, gunite) that will not produce hazardous debris, but will ensure structural integrity. The earth fill or earth cover between earth covered magazines may be either solid or sloped in accordance with the requirements of other construction features, but a minimum of 2 feet of earth cover shall be maintained over the top of each magazine and a minimum slope of 1½ horizontal to 1 vertical starting directly above the spring line of each arch shall be maintained to meet explosives safety requirements. New construction must have a slope of 2 horizontal to 1 vertical to reduce erosion and ease maintenance operations.

8-2.5.6. Single Revetted Barricades. The concrete face of single revetted barricades shall be covered with two thickness' of 2-inch soft pine lumber when more than one cell (blow out side) faces the barricades.

8-2.5.7. Earth-filled, Steel Bin-Type Barricades (Armco Inc. Revetments or Equivalent) for Outside Storage.

8-2.5.7.1. Description. These barricades, also known as Armco Inc. revetments, are earth filled steel bins used to separate munitions awaiting scheduled processing, for example, munitions on flight lines associates with aircraft parking/loading operations or the temporary positioning of munitions awaiting transfer to preferred, long-term storage. The barricades are also used to separate uploaded aircraft. These barricades are normally used to form a series of cells. The barricades are designed to limit the maximum credible event (MCE) (for Q-D siting purpose) of the munitions stored in separate cells by preventing prompt detonation transfer to adjacent cells provided the munitions in each cell of the facility are properly positioned.

8-2.5.7.2. Munitions Approved for Armco Revetments. Armco Incorporated revetment cells are approved for storage of any HC/D 1.1 and 1.2 ammunition assigned to Sensitivity Groups 1 through 4, as discussed in paragraph 7-8.1.6.2. In addition, storage of HC/D 1.3, 1.4 or 1.6 items is approved.

8-2.5.7.3. Quantities of Munitions Allowed in Cells. Armco Incorporated revetments as sited below should only be considered for preventing prompt detonation transfer, and that all munitions (and aircraft) in the series of cells are at risk of loss. In other words, although the revetments are effective in limiting the blast loading of unrelated ESs to that produced by the largest contents of a single cell, there is significant probability that the contents of many cells will be damaged or destroyed by the initial and subsequent fire and explosion events. The extent of such losses increases with the amount of explosives present. Therefore, if valuable munitions and/or aircraft assets are to be preserved, then the quantities allowed in cells should be limited to satisfy valid essential operational requirements.

8-2.5.7.4. Types of Armco Revetments. There are two types of Armco Incorporated revetments: Type A and Type B. Type A revetments must be a minimum of seven feet thick. Type B revetments must be a minimum of 5.25 feet thick. Type A Armco Inc. revetments may be used to limit the MCE in a series of cells to the largest quantity in a single cell if that quantity does not exceed 30,000 pounds NEW. Type B Armco Inc. revetments may similarly be used to limit the MCE, provided no cell contains more than 5,000 pounds NEW. The following conditions must be met.

a. In addition to satisfying the criteria illustrated in figure 8-1, munitions must be positioned no closer than ten feet from cell walls, no closer than three feet from the end of the wing walls, and no higher than two feet below the top of cell walls.

b. Munitions shall be positioned with the objective of distributing them over the available area within the cell, rather than concentrating them in the small area. The contents of a cell (stored in quantities near the maximum NEW limit) must not be configured into a single row of pallets, stacks, or trailers.

c. Storage of munitions in flammable outer-pack configurations must be minimized.

8-3. LITHIUM BATTERY FACILITIES

8-3.1. LITHIUM BATTERY EXPLOSIVES OPERATING FACILITIES.

8-3.1.1. Construction Requirements. Facilities (new and existing) used for explosives operations conducted on AE containing lithium batteries must meet the safety and construction requirements of UFC 3-520-05.

8-3.1.2. Operations Requirements. Assembly, disassembly, and maintenance of AE containing lithium battery components are considered explosives operations and must be conducted in facilities or open areas separated from PESs by ILD at a minimum.

8-3.2. LITHIUM BATTERY CHARGING FACILITIES.

8-3.2.1. Construction Requirements. Facilities (new and existing) used to charge lithium batteries must meet the construction requirements of UFC 3-520-05. These facilities will be sited based on use.

8-3.2.2. Charging Requirements.

a. Charging lithium batteries with AE components installed is considered an explosives operation and must be separated from PESs by ILD at a minimum.

b. Charging lithium batteries related to AE by personnel related to AE operations and with no AE components installed must be separated from PESs by a minimum of fire separation distance (100 feet per NFPA 855)

c. Charging lithium batteries with AE components installed must not be conducted concurrently with other explosives operations (e.g., assembly, disassembly, inspection, maintenance) in the same facility unless ILD-equivalent protection is provided.

8-4. OPERATING BUILDINGS.

8-4.1. SITING, DESIGN AND CONSTRUCTION REQUIREMENTS. The locations of all ammunition and explosives operating buildings are subject to the applicable quantity-distance requirements of chapter 7 and siting requirements of this chapter. The personnel protection requirements of paragraph 8-1.4 shall be considered in the design of production facilities. In addition, the following requirements apply to operating buildings and facilities.

8-4.1.1. Building Exterior. Exterior wall coverings of operating buildings shall be constructed of noncombustible materials. Roof coverings must be constructed of noncombustible materials or fire-resistant materials. Fire-resistant roof coverings must follow guidance in UFC 1-200-01 and provide a minimum fire resistance of Class A rating per ASTM E108 or UL 790. Fire-resistant roof covers providing a Class B rating may be considered only for existing roofs where a Class A rating is unfeasible without structural modifications. Roofs shall comply with the requirements of paragraph 8-4.1.3.2. The buildings shall be without basements and not more than one story high except where operationally necessary.

8-4.1.2. Building Interior. Interior surface finishes of explosive operating buildings should be of smooth, fire-retardant material and free of cracks and crevices, have joints taped or sealed, and, if painted, be covered with a hard gloss paint to facilitate cleaning and to minimize the impregnation of finished wall and ceiling material with explosives. Horizontal ledges that might hold dust shall be avoided or be beveled. The requirements are mandatory where there is potential for accumulation of explosive dust on facility interiors.

8-4.1.3. Construction Features.

8-4.1.3.1. Floors and Work Surfaces. Floors and work surfaces in hazardous locations shall be constructed to facilitate cleaning and should have no cracks or crevices in which explosives may lodge. Subfloors, finished flooring, and work surfaces should not wrinkle or buckle under operating conditions. Where washing is required, surfaces must be capable of withstanding repeated applications of hot water. Locations needing conductive floors, with provisions for grounding work surfaces, are specified in paragraph 5-5.3.1. Nonsparking floors and work surfaces must not spark when stroked vigorously

with a hardened steel file. Cove bases at the junction of walls and floors are recommended. Exposed nails, screws, or bolts in work surfaces must be avoided.

8-4.1.3.2. Roofs and Walls. Roofs and walls of buildings, except earth-covered magazines and containment type structures, shall be constructed of lightweight material so they will produce a minimum of large fragments in case of an explosion. Exception is made for firewalls and substantial dividing walls discussed in the following subparagraphs. Roofs and walls shall be free of damage, cracks, or openings where water can seep in and cause injury to personnel or damage to materials stored.

8-4.1.3.3. Fire Walls. Firewalls are designed to prevent the spread of fire from one side of the wall through to the other. The design and construction of firewalls varies with the type of construction of the building and the occupancy. For the types of construction commonly encountered, firewalls should extend through the roof and walls. The minimum requirements for approved firewalls given in the UFC 3-600-01 (series) must be followed. Openings in firewalls shall be held to the minimum. Necessary openings shall be protected in accordance with the requirements of NFPA 80.

8-4.1.3.4. Substantial Dividing Walls. Substantial dividing walls separating two independent concentrations of high explosives are considered an effective means for preventing the sympathetic detonation of explosives or explosive materials on both sides of the wall when a detonation occurs on either side. If the explosives on both sides of a substantial dividing wall are prevented from exploding simultaneously, the purpose of the wall is accomplished even though the wall may be demolished in the process and structural damage to the plant may be severe. Under these conditions, the quantities separated by substantial dividing walls need not be added together to compute quantity-distance requirements. Stacks of explosives shall be kept 3 feet from these walls. A substantial dividing wall shall extend to the roof and to the sidewalls of the space, dividing it into separate rooms. In all future construction, all substantial dividing walls shall be constructed in accordance with UFC 3-340-02 (refer to paragraph 8-4.1.4). Spalling of the wall surface opposite the explosion source may form dangerous secondary fragments, which must be controlled to prevent a serious personnel hazard. UFC 3-340-02 establishes design procedures and construction techniques based on blast load analyses of various protective structures and barriers.

8-4.1.4. Operational Shields. Certain operations involving the processing of ammunition and explosives require operational shields for the protection of personnel, material, and/or equipment. Although the requirement for use of operational shields cannot be simply and clearly defined because of the many variables affecting a given operation, the primary need for shielding is dependent principally upon such factors as the quantity and types of explosives or other hazardous materials being handled and the nature of the operation being performed. Design criteria for operational shields shall be as described in the following subparagraphs.

8-4.1.4.1. Operational shields shall be designed taking into account thickness, size, fastening, and location of the shielding in such a manner as to protect with a minimum safety factor of 1.25 against the detonation effects of the maximum expected charge. Permissible personnel exposure limits for blast, fragments and thermal flux are discussed in paragraph 8-1.4. Operational shields for protection against quantities of explosives less than 15 pounds may be of steel or other suitable material. In the absence of reliable data, the adequacy of these operational shields, including thickness, size, fastening and location shall be proved by actual test with a minimum safety factor of 25% above the maximum expected charge before their use is permitted in operations. Operational shields previously tested for given quantities of explosives need not be re-tested for exposures of the same magnitude.

8-4.1.4.2. Existing reinforced concrete walls built to resist the effects of accidental explosions and designed and constructed in accordance with requirements applicable at the time of construction may be used as operational shields employing the following guidance as a minimum requirement:

a. A 12-inch reinforced concrete wall provides adequate protection against the effects of 15 pounds or less of high explosives when the nearest explosive is at least 3 feet from the wall and 2 feet from the floor.

b. A 30-inch reinforced concrete wall provides adequate protection against the effects of an item containing not more than 50 pounds of high explosives. The same separation distance as stated in subparagraph a., above applies.

c. A 36-inch reinforced concrete wall provides adequate protection against the effects of an item containing not more than 70 pounds of high explosives. The same separation distance as stated in subparagraph a., above applies.

8-4.1.5. Building Exits. In small rooms or cubicles having substantially constructed walls on three sides and occupied by not more than two persons, only one properly located exit is required. Otherwise, at least two exits shall be provided for each operating room or building containing explosives and other materials that constitutes a serious hazard to operating personnel. Exits shall be a minimum of 36 inches wide and located at opposite ends or sides of the area involved. They must be located so that each operator is between the explosive hazard and an exit if the doors can be easily opened in a panic situation. The path of travel from the workplace shall be unobstructed. Rooms in which more than eight persons are employed shall be provided with one additional exit for each five additional employees. In determining the total number of exits required where exit widths exceed 36 inches, each 36 inches of width may be considered one exit if the doors can be easily opened in a panic situation. It is desirable to have exits equally spaced around the perimeter of the building so that no individual is more than 25 feet from the nearest exit. Exits shall open to the outside of the building rather than into a hallway or another room. A request for deviation from this requirement must be submitted in accordance with paragraph 1-6.3.

8-4.1.5.1. Doors. Exit doors in operating buildings shall open outward and, during operating hours, shall not be fastened with locks other than anti-panic catches or similar quick releasing devices. All exit doors shall be so marked and shall be unobstructed at all times. Exit doors in buildings containing explosives, except storage magazines, shall be hollow metal doors with nominal dimensions 3 feet wide by 6 feet 8 inches high equipped with closers and “quick opening” (panic) hardware. All interior doors shall open in the direction of flow of material through the building and shall open onto unobstructed passageways. Where doors open onto platforms that are 4 feet or higher above the ground, safety chutes, ramps, or stairways with handrails shall be provided from the platform. Doors opening onto ramps or passageways shall be designed for quick exit. Large doors (that is, equipment access) that cannot be easily opened in a panic situation may have a smaller door installed within a panel for quick egress.

NOTE

Existing exit doors, in buildings previously site-approved for explosives operations, need not be replaced in order to comply with this paragraph, but must be brought into compliance during building modifications or large scale maintenance projects.

8-4.1.5.2. Safety Chutes. Safety chutes shall be provided in hazardous locations where quick exit is vital and cannot otherwise be provided. Safety chutes normally are required in multistory buildings and shall be provided for all work levels above the ground floor. Safety chutes should be located on the side opposite the hazardous operation where practical to reduce the likelihood of personnel being trapped by fire between them and a single chute. Entrances to safety chutes must open on a platform not less than 3 feet square and equipped with guard rails. The chutes shall begin at the outside edge of the platform and not at the edge of the building. Landings from safety chutes shall be located at selected places that lead directly to escape routes free from tripping hazards, low guy lines, drains, ditches, or other obstructions. Recommended dimensions for construction of safety chutes are: angle with the horizontal of 40° to 50°, depth of 24 inches, and radius at the bottom of chute of 12 inches. The lower end of the chute must not be over 24 inches above the ground. If necessary, the end of the chute must have a horizontal run sufficient to prevent injury to personnel without the use of landing cushions. In general, chutes less than 15 feet long require no horizontal run while those 40 feet long require a 6-foot horizontal run. The juncture of the two sections must be well rounded and the sheets of metal used to construct the chute must overlap in the direction of travel.

8-4.1.5.3. Emergency Exits and Fire Escapes. The requirements of the latest edition of NFPA 101 shall be used as a guide for emergency exit requirements. Provisions of emergency exits, however, shall not be less than the requirements given above for emergency egress from operating buildings. Exterior fire escapes from buildings two or more stories in height shall be of noncombustible material and should be located at a section of the wall not containing windows. Windows or doors in proximity to the fire escape, and from which flames may reach escaping personnel, shall be glazed with wire glass except in explosives operating buildings where the glazing shall consist of relatively nonshatterable, transparent, slow-burning plastic materials of a type that is practically smokeless when under combustion. Windows required to be glazed with wired glass will be of the fixed type. Fire escapes having four or more risers will have handrails.

8-4.1.6. Stairways. Ramps or inclines should be provided for a rise of less than 20°. Stairways are required for a rise between 20° and 50°. Open stairways should be avoided and stairways with four or more steps must be provided with handrails. The design and use of stairways and ramps must conform to OPNAVINST 5100.23 (series) and 29 CFR 1910. The installation of winding or “spiral” stairways should be avoided.

8-4.1.7. Fixed Ladders. Fixed ladders of wood or steel should be erected in areas in which a stairway cannot be constructed. They should conform to the requirements of the latest edition of the American National Standards Institute (ANSI) A14.3 and 29 CFR 1910 describing the construction, care, and use of ladders.

8-4.1.8. Platforms, Runways, and Railings. Platforms, runways, and railings must be constructed in accordance with the latest edition of ANSI A14.3 and 29 CFR 1910 safety code for floor and wall openings, railings, and toeboards.

8-4.1.9. Passageways. Weather-protected passageways and ramps for travel between buildings or magazines shall be constructed of fireproof material to prevent the propagation of fires.

8-4.1.10. Tunnels. Wherever tunnels are used, they shall be drained, adequately ventilated, well lighted, and preferably provided with at least two exits. Water and steam service lines in tunnels shall be covered with suitable insulation. Tunnels between buildings containing explosives shall be designed and constructed with special consideration given to minimizing the effect of shock wave and blast to prevent possible communication of an explosion. Only required operating personnel shall be permitted in tunnels.

8-4.1.11. Windows and Skylights. The use of windows in explosives operating buildings or any buildings encumbered by inhabited building ESQD arcs should be avoided. All buildings shall be designed to locate windows in directions away from any explosives source. This requirement applies even when the buildings are separated sufficiently to meet inhabited building distance requirements, since inhabited building distances do not protect against the hazards of flying glass. Shatterproof glazing such as laminated safety glass or plastic material shall be used in windows where there is danger of an explosion which could cause injury from projected glass. Where glazing with conventional glass has been used, the danger of falling and projected glass can be reduced by covering the glass with wire mesh screening or plastic laminate on the inside, or heavy plastic material on the outside. Skylights shall not be used in buildings where explosives or ammunition are processed or any buildings encumbered by inhabited building distance ESQD arcs. New or modified inhabited buildings sited within an inhabited building ESQD arc that have windows shall have glazing, including framing, that provides resistance from blast equal to that of the building walls or of adequate strength to resist the potential overpressure that could be experienced at the site.

8-4.2. BUILDING FACILITIES AND EQUIPMENT.

8-4.2.1. Lighting Requirements. Lighting installations in operating buildings, including panel boards, wiring, conduits and fixtures, should not be located in rooms or buildings containing explosive dusts, flammable vapors, or combustible dusts that may form explosive or flammable mixtures with air. When such installations are necessary, the complete system must meet the requirements of NFPA 70 Article 500 for the specific hazardous (classified) locations using equipment listed by UL or other approved testing agencies as defined in chapter 5. Each installed item shall be protected against physical damage by a suitable guard or by location. Replacement of lamps and fixtures shall be the same as original design or as otherwise approved by the local Safety Officer or by NOSSA.

8-4.2.2. Drains and Sumps.

8-4.2.2.1. All drain lines handling explosive wastes shall be provided with sumps and basins for removing explosives by settling. The drains shall be of adequate capacity, free of pockets, and have sufficient slope, at least one quarter-inch per foot, to prevent the settling of explosives in the drain line before they reach the sump or settling basins. Sumps must be designed so that suspended explosives and deposits of solid explosive material cannot be carried in wash waters beyond the sumps. The design should allow sufficient settling time based upon the settling rate of the material and the usual rate of flow. The sump also should be designed to permit easy removal of collected explosives and retention of those explosives which float on water until they can be skimmed off. Sumps shall be constructed so that the overflow will not disturb any floating solids and so that explosives cannot settle in obscure or hidden spaces.

8-4.2.2.2. Care must be taken to prevent deposits of explosives formed due to drying, temperature changes, or interaction with other industrial contaminations from flowing out of the sump. When explosives that are appreciably soluble in water are handled, sweeping and other dry collecting measures shall be used to keep them out of the drainage system.

8-4.2.2.3. In all new construction or major modification of existing facilities subsequent to issuance of this publication, drains between the source of explosive and the sump shall be troughs with rounded bottoms and removable, ventilated covers to facilitate inspection for the accumulation of explosives. All designs must comply with local, state, and federal environmental regulations. Water contaminated with explosives shall not be run into closed drains and sewers. Drains shall be inspected periodically and necessary steps shall be taken to prevent the buildup of explosives deposits in them. Explosive waste

materials must be advanced into a separate waste water treatment system and not connected to normal sewage system.

8-4.2.3. Hardware. Hardware in buildings containing exposed explosives materials, explosive dusts, or explosive vapors should be made of non-sparking material. Fasteners such as nuts and bolts, if located where they might fall into explosives or explosive constituents, shall be held in place by being drilled and thonged or otherwise secured.

8-4.2.4. Emergency Showers and Eyewash Units. Safety shower heads and safety eyewash units (designed to deliver large quantities of water at low pressure) equipped with quick operating valves shall be readily available in areas where acids are handled for removing acid spilled on employees. Change rooms and shower facilities, either stationary or mobile, shall be provided for personnel working in toxic chemical operations. In pyrotechnic operations, emergency-washing facilities (tanks, bath tubs, or safety showers) shall be provided. Eyewash and shower equipment shall conform to performance standards established by ANSI Z358.1. Emergency shower and eyewash units should be in accessible locations that require no more than 10 seconds to reach and should be within a travel distance no greater than 100 feet from the hazard. Depending upon the potential effect of the chemical, as with highly corrosive chemicals, showers and eyewash units should be installed 10 to 20 feet from the hazard. Showers should be flush with the floor and not present a trip hazard as is evident when a shower module is installed requiring an individual to step up into a shower unit. The location of each shall be identified with a highly visible sign. Emergency shower and eyewash equipment shall be protected from the influence of a fire in any building and from freezing. Such devices shall be placed so that the normal hazard is not increased by the possible contact of water with compositions containing metallic powders. These tanks, bathtubs, or safety showers should be placed, where practical, not more than 25 feet from an exit. Plumbed and self-contained eye wash unit shall be periodically tested in accordance with OPNAVINST 5100.23 (series) and ANSI A358.1. Deluge emergency showers should be tested/operated using the same requirements as that for the eye wash station.

NOTE

The use of water saving showerheads is forbidden.

8-4.2.5. Laundries. Installations having facilities for washing and flameproofing uniforms should have facilities for safe storage of uniforms contaminated with explosives prior to washing, facilities for removing explosives from waste water, and facilities for testing to check the complete removal of contaminants, particularly when insoluble toxic substances are involved. Wash water produced from the laundering of explosives-contaminated clothing must be drained into a separate water waste treatment system and not connected to normal sewage systems carrying inert or sanitary waste. Commercial facilities contracted to launder explosives-contaminated uniforms should have these facilities and must be informed of the nature of the explosives, the type of contamination, and dangerous chemical reactions that might occur.

8-4.2.6. Power for Processing and Heating.

8-4.2.6.1. Powerhouse Equipment. Powerhouse equipment, boilers, engines, and auxiliary equipment should be installed in accordance with the ASME Boiler Code, the ASME Code for Unfired Pressure Vessels, the National Electrical Code, and other applicable codes, regulations, and standards that are recognized as good practice.

8-4.2.6.2. Steam Requirements. Steam used for heating operating buildings containing explosives shall have a maximum pressure at the building heating units of 5 pounds per square inch (psi) [(228

degrees Fahrenheit (°F)]. Process steam, steam in direct contact with explosives or, in case of equipment failure, steam that would come directly into contact with explosives or explosive fumes, may exceed 5 psi when necessary, but in no case shall it exceed 15 psi unless prior approval is obtained from NOSSA. The exterior surface of steam or hot water pipes in contact with wood, paper, or other combustible materials shall not exceed 160°F. In hazardous locations where steam temperatures must exceed 228° F, steam lines shall be covered and painted with an impervious material or otherwise protected against contact with explosives. If a reducing valve is used, a relief valve should be installed on the low pressure piping. The production of super heated steam from the throttling action of reducing valves must be prevented by positive means and a "water leg" or water column for control of steam pressure of 5 pounds or less is recommended. If close control of steam temperature is necessary gages indicating and recording pressure or temperature should be installed, tested periodically, and the test results recorded. Steamlines should be properly grounded in accordance with paragraph 6-6.3.3.

NOTE

For requirements for steam cleaning refer to paragraph 4-1.8.5.

8-4.2.6.3. Fuels. Fuel oil, coal, natural or manufactured gases, and liquefied petroleum gas (LPG) may be used for heating buildings and firing boilers. All of these fuels introduce certain hazards when used in ordnance installations. Incandescent particles that are capable of starting fires in many combustibles may be exhausted from boilers fired with any of these fuels. Since particles from a coal fire are likely to retain their incandescence longer than those from oil or gas fires, this hazard is more severe where coal is used. In addition, abrasive particles are exhausted from coal fires and may remain airborne for considerable distances. If these abrasives become mixed with explosives, the sensitivity of the explosives may be increased. Liquefied petroleum gases escaping from pipelines and storage tanks as a result of leaks or ruptures rapidly revert to their gaseous states. These gases spread rapidly and, because they are heavier than air, seek low levels such as depressions, drains, and tunnels. When ignited, these gases burn with explosive violence. Initiation at any point is likely to cause all the escaped gases to ignite. For this reason, LPG fueled devices such as solder pots, tar melt pots, and heaters of any type shall not be permitted in areas containing ammunition or explosives. The hazards inherent in the use of natural and manufactured gases are of the same type as those from liquefied petroleum gases. However, those from liquefied petroleum gases are more severe. The siting requirements for boiler houses in explosives areas are specified in chapter 7. Fuel storage for these boiler houses should be located at least 50 feet from the boiler houses and should not be closer to the explosives facilities than are the boiler houses. The use of infrared gas heaters is prohibited.

8-4.2.6.4. Heating of Explosives Operating Buildings. Heating of explosives operating buildings by use of heating boilers located in the building is permissible under the following conditions:

a. Low pressure heating boilers only are used. Fuel oil is the preferred fuel.

b. The boiler is separated from the rest of the building by a 2-hour rated fire wall or a wall offering equivalent protection.

c. Entry/exit to the boiler room is through exterior walls only and there are no wall openings between the boiler room and the remainder of the building.

d. The fuel supply tank is located at applicable fire separation distance from the building, based on UFC 3-460-01 and NFPA 30. Additional siting criteria for tanks is provided in paragraphs 7-13.7, 7-13.8, and 7-13.10.

e. If a day tank is located adjacent to the boiler, it should not contain more than an 8-hour supply of fuel.

8-4.2.7. Ventilation. A ventilation system is a system whose primary purpose is to remove dusts, fumes, or vapors in order to protect personnel from the toxicological effects of the chemicals or to keep concentrations of combustible dusts and flammable vapors below the lower explosive limit. A ventilation system may collect incidental quantities of explosive dusts.

8-4.2.7.1. Buildings where dust, fumes, or vapor are formed shall be adequately ventilated, preferably at the source of the hazard. Exhaust fans through which combustible dust or flammable vapor pass shall be equipped with nonferrous blades and approved motors. The entire ventilation system shall be electrically bonded and properly grounded. NFPA 91 may be used as a guide for installation of such equipment. Exhaust systems shall be cleaned thoroughly and serviced on a regular schedule, and a log maintained of the cleaning and servicing.

8-4.2.7.2. The following rules and regulations apply to ventilation:

a. Wherever harmful dusts, fumes, mists, vapors, or gases exist or are produced in the course of industrial operations in quantities that may cause harmful exposure of personnel, and preventing or eliminating such hazards is not practical by process modification or substitution, such hazards shall be controlled by adequate ventilation.

b. Adequate ventilation is a system which, under normal operating conditions, is sufficient to keep the concentration of a hazardous gas, vapor, mist, fumes, or dust below the amount that will produce harmful effects. The Occupational Safety and Health Administration (OSHA) has established requirements for permissible concentrations of such substances in both confined and open industrial spaces. Refer to the OSHA requirements for permissible concentrations to prevent fire and explosion in 29 Code of Federal Regulations (CFR) 1910.146 and 1910.106(a)(31), and for Permissible Exposure Limits (PEL) to which employees must not be exposed in 29 CFR 1910.1000.

c. Adequate ventilation, as defined, may be general ventilation, local point of generation exhaust ventilation, or other effective means such as pressure ventilation. Venting to the atmosphere must be accomplished at a height that will ensure safety to passersby.

d. Local point of generation exhaust systems shall be designed so that dust, fumes, mists, vapors, or gases are not drawn through the breathing zone of workers.

e. All ventilation systems shall be provided with collection and/or air filtration systems before exhausting to the atmosphere. Such collection and filtration systems shall be designed so that exhausted air meets federal, state, and/or local air and water pollution standards. Collection wastes shall be given particular attention so they do not in themselves create further pollution.

f. Further information on accepted professional industrial ventilation design is available in ACGIH publication, “Industrial Ventilation, A Manual of Recommended Practice” and ANSI Z9.2 and Z9.3.

g. The assistance of the Navy Environmental Health Center should be requested on matters dealing with interpretation of exposure limits in terms of threshold limit value (TLV), and related industrial ventilation design criteria.

h. Exhaust ventilation systems shall be cleaned on a regularly-scheduled basis. For such systems, which are subject to buildup of explosives contaminants, a hazard assessment must be

performed and written procedures developed specifying cleaning frequency and methods to minimize risks to operations and cleaning crew. A maintenance log shall be maintained.

i. When buildings are air conditioned, or when a forced air inlet is provided for the buildings in which there is explosives dust, an air exhaust system should be provided. The air exhaust system should be balanced to give a slight negative pressure within the building. Air conditioning equipment should be installed in accordance with the requirements of National Fire Protection Association (NFPA) 90A.

8-4.3. MISCELLANEOUS BUILDING REQUIREMENTS.

8-4.3.1. Booster Loading Building. The building shall be equipped with properly designed air conditioning and humidity control equipment. The return air system shall be provided with a water wash. The walls of press cells and blending cells for booster loading shall be parapetted, and designed to meet personnel protection requirements of paragraph 7-7.4. The roof and back wall of the cells shall be of light construction designed to blow out in case of an explosion.

8-4.3.2. Paint and Solvent Storage. Paint and solvent storage buildings used for ready storage of paints, lubricating agents, and solvents (including inhibiting solvents) shall be placed a minimum of 50 feet from operating buildings. Ready storage of limited quantities of paint and solvents within operating buildings is permissible. Paints and solvents not used on a regular basis are not authorized for ready storage. NFPA-approved paint lockers/containers shall be used for such storage.

8-4.3.3. Melt/Pour Building. All drains of melt/pour buildings shall be open and shall empty into a sump designed to entrap the explosive from the wastewater. The discharge end of the sump shall be equipped with a filter. An adequate exhaust system using a wet dust collection system shall be installed on each melt/pour building.

8-4.3.4. Screening Building. An adequate exhaust system using a wet dust collection system shall be installed on each screening building.

8-4.3.5. Mechanical Rooms. Hydraulic pumps and other similar non-explosive mechanical support equipment should be located in buildings separate from the explosives operating building having a non-explosives hazards location. The two buildings may only be connected by hydraulic pipelines, steam pipelines, and rigid electrical conduit that meets the requirements of the National Electrical Code (NEC) and NFPA 70. If a mechanical room has to be integral to the same buildings, the equipment must be in a room separated from the rest of the building by a 2-hour rated fire wall. Entry/exit to the mechanical room must be through exterior walls only and any openings for pipelines must be sealed to prevent any explosive gas or dust leaks.

8-4.3.6. Test Cells. Test cells are designed to protect operating personnel and personnel in nearby buildings from the effects of lethal overpressure and fragments generated by a process determined to have a level of hazard requiring remote operations. Power application non-launch activities and other weapon system tests can be performed on some weapons by proximity testing when the Weapon Systems Explosives Safety Review Board (WSESRB) concurs with the operation, thereby eliminating the need for remote control of the operation. New cells are to be designed in accordance with UFC 3-340-02 (contact Naval Facilities Engineering and Expeditionary Warfare Center (NAVFAC EXWC)-for additional information). The following criteria shall be used to supplement the various design techniques covered by the manual:

8-4.3.6.1. Cell Walls.

a. All cell walls dividing the cell work area from areas where personnel are located for other than remote operations shall be designed for a maximum of 5° rotation at the design charge weight.

b. Cell dividing walls, those wing walls dividing one cell from another, may be designed for a maximum of 12° rotation when personnel exposure is not involved.

c. The design charge weight shall have a safety margin of at least 1.2 over the estimated charge weight for the operation.

d. The cell wall thickness shall be checked according to the rotation criteria above and also to fragment penetration criteria associated with the ordnance item and operation under consideration. The more severe criteria shall govern.

e. All cell walls, connecting walls, ceilings, etc., subject to rotation rates of 2° or more and normally exposed to personnel during remote operations shall be sufficiently covered by shielding to prevent escape of concrete spalls into the working areas.

8-4.3.6.2. Debris Barriers. Facilities with cell walls not extending through the ceiling and roof shall have debris barriers of wire mesh installed over cells, adjacent cells, and operator work areas near the cells using approved deigns to prevent injury to personnel in the event of falling debris.

8-4.3.6.3. Cell Doors. Doors on any equipment used for explosives processing, when they function as operational shields, shall have interlocking devices installed to prevent the operator from opening the doors while the equipment is in operation. Likewise, the cell doors of reinforced concrete cells shall be interlocked with the equipment within the cell to prevent the operator from opening the door while the equipment is in operation. Door closure controls shall not be installed within cells. Cell doors shall be equipped with safety release devices to prevent personnel from being caught by a closing door, allow egress from the cell, and become inoperative only to prevent the overpressure of an explosion from opening the door. Cells connected by scuttles shall have 1-inch armor plate doors on each side and the doors interconnected so that only one door can open at a time.

8-4.3.7. Construction Requirements for Buildings Housing Acids. All buildings will comply with applicable OSHA and Environmental Protection Agency (EPA) hazardous material standards.

8-5. TRANSFER FACILITIES.

Ammunition and explosives transfer facilities include segregation facilities, holding yards, classification yards, shipping ramps, docks and platforms, and other facilities such as inspection stations and suspect cargo sites. Siting criteria are addressed in chapter 7.

8-5.1. SEGREGATION FACILITIES. A typical segregation facility should consist of three main buildings including a bomb-type ammunition building, a general ammunition building, and a propellant powder building. At smaller ammunition activities, it may be necessary to limit segregation facilities to a single building. A bomb-type ammunition building is used to segregate and sort HC/D 1.1 ammunition such as bombs, mines, warheads, depth charges, demolition material, and bulk high explosives. A general ammunition building is used to segregate and sort projectiles, fixed ammunition, rockets, fuzes, primers, black powder cartridges and units, mortar ammunition, small-arms ammunition, pyrotechnic material, and inert material. A propellant powder building is used to segregate and sort bulk smokeless

powder, bulk jet assist propulsion powder, propelling charges, separate rocket motors, and propulsion units. Refer to paragraph 12-9.4 for regulations governing operations.

8-5.2. HOLDING YARDS. Generally, rail holding yards are laid out on a unit railcar-group basis with each unit railcar group separated by the applicable aboveground magazine distance. Truck holding yards are usually laid out on a unit truck group basis with each group separated by the applicable aboveground magazine distances. In addition to the temporary parking of railcars, trucks, cargo containers or trailers containing ammunition and explosives, holding yards also may be used to interchange trucks, trailers or railcars between the common carrier and the DoW activity, and to conduct visual inspections (see paragraph 12-7.4.2).

8-5.3. CLASSIFICATION YARDS. Classification yards are used primarily for receiving, dispatching, classifying and switching of railcars; interchanging of trucks, trailers, or railcars between the common carrier and the DoW activity; conducting external inspection of motor vehicles and railcars; or opening free rolling railcar doors for the purpose of removing documents and making a visual inspection of the cargo. Trucks, trailers, or railcars should not remain in the yard for more than 24 hours.

8-5.4. SHIPPING RAMPS, PLATFORMS, AND LOADING DOCKS. The outboard edge of shipping ramps, docks, platforms, and so forth, that are 4 feet or more above the adjacent floor or ground level shall be guarded by a railing except where there is an entrance. Railings may be omitted where operating conditions necessitate such omission. However, if the ramp, dock, or platform is not constructed to prevent personnel from slipping or stepping off, the outboard edge shall be painted with a solid yellow band, or alternating diagonal yellow and black stripes, or yellow and black checkers at least 2 inches wide. If exterior shipping ramps, docks, and platforms are used, they should be kept free of ice, snow, and other slipping hazards. The railing, if installed, shall consist of a top rail, intermediate rail, and posts, and shall have a nominal vertical height of 42 inches. Refer to OSHA Standards, 29 CFR 1910.23 for additional minimum railing requirements.

8-5.5. INSPECTION AND WEIGHING STATIONS. Facilities shall be provided for the external inspection of railcars and motor vehicles containing ammunition and explosives upon delivery to the installation and prior to further routing within the installation. Activities that may be performed at an inspection station after railcars or motor vehicles containing ammunition and explosives are received from the carrier, and prior to further routing within the installation, are: external visual inspection of the railcars or motor vehicles; visual inspection of the external condition of the cargo in vehicles (trucks, trailers, railcars, cargo containers, etc.) that have passed the external visual inspection; interchange of trucks, trailers, railcars or cargo containers between common carriers and the DoW installation; and weighing of vehicles. Any railcars, or motor vehicles that are suspected to be in a hazardous condition will be isolated consistent with applicable quantity-distance separation requirements for the hazard class and explosives quantity involved. This shall be accomplished prior to any subsequent action.

8-5.6. SUSPECT CARGO SITES. Suspect cargo sites should be provided for railcars and trucks when the contents are suspected of being in a hazardous condition. These sites should have effective barricades on three sides and shall be located consistent with applicable quantity-distance separation requirements for the most restrictive hazard classification of material handled on-station. Isolation shall be accomplished prior to any subsequent action. The sites may be used jointly for railcars, motor vehicles, and cargo containers provided that the applicable quantity-distance separation is met.

8-6. PIER AND WHARF FACILITIES.

Responsibility for the design and construction of new piers and wharves lies with the Naval Facilities Engineering Systems Command (NAVFAC). New construction should consist of reinforced concrete

piles and deck or solid fill with necessary tender systems to resist fire. The following information concerns specific requirements for ammunition handling piers at ammunition terminals.

8-6.1. NEW CONSTRUCTION.

8-6.1.1. The ammunition pier or wharf should be limited to two berths for ocean-going ships or to berthing space for eight barges, and the vessels should be separated one from the other by the distance as called for in paragraph 7-10.6.1 to prevent simultaneous detonation.

8-6.1.2. Not more than three ammunition piers or wharves should be built at one installation and such piers, each limited to two berths, should be separated from each other by the distances shown in the quantity-distance tables, based on the maximum quantity of explosives in the ship unit (see paragraph 7-10.3).

8-6.1.3. Both ends of the wharf should be connected to the shore whenever practical.

8-6.1.4. Trestles should have solid decks and should be provided with a walkway and railing along one side. Refuge platforms should be placed along the walkway at 200-foot intervals.

8-6.1.5. An elevated loading platform should be provided adjacent to shipside. The deck of the loading platform should be of minimum width necessary to provide efficient operation and safe clearance for railroad equipment, other mechanical equipment, and vehicles. Two or three lines of railroad tracks should be placed on the pier or wharf deck parallel and adjacent to the loading platform and flush with the deck. For efficient switching, the tracks should be interconnected with a crossover installed convenient to each ship berth. The width of the pier deck itself should be such that emergency vehicles can maneuver on it.

8-6.1.6. No sheds for cargo storage or warehouse use shall be constructed on explosives piers or wharves, with exception of those facilities that house equipment necessary for pier operations.

8-6.1.7. The distance from the pier or wharf to areas and structures outside and inside the installation should be based on the planned explosives concentration at the pier/wharf, handled at one time to service combatant ships. When ships carrying cargo ammunition are to be serviced, the explosives safety distance will be based on the combined explosive concentration of the ships and the pier/wharf with the exception of cargo ammunition loads defined in paragraph 7-10.d, which will be treated in accordance with paragraph 7-10.1.

8-6.1.8. Wherever practical, large buildings should be oriented so that their long axis is parallel to the most likely direction of travel of the blast wave.

8-6.1.9. Piers that have combustible piling or deck material should be provided with transverse fire stops in accordance with NFPA 307 (see paragraph 4-3.12.2).

8-6.2. EXISTING FACILITIES. It is recognized that many piers now in use cannot qualify under the new pier standards, either because of the type of construction or physical location. When existing piers or wharves of fire resistive, noncombustible, or combustible construction are selected for handling explosives or ammunition, the extent of conformance with the safety requirements detailed for new piers or wharves will depend upon the location of the existing installation, the type of ammunition and explosives that are to be handled, the quantity of high explosives concentrated at the pier or wharf, and

the urgency and necessity of such handling. In addition, the following applies to use of existing facilities.

8-6.2.1. Existing pier sheds may be used for ordnance staging or warehousing noncombustible equipment. Ordnance staging must be within the parameters of paragraph 2-5.2.7. If the existing pier sheds are to remain on the pier or wharf, or must be used for storage or warehousing of general materials or ordnance staging, they should conform to the applicable standards for automatic sprinkler protection, fire walls, transverse fire stops, and fire areas. Vacant and unused sheds should be locked and inspected periodically. All power should be cut off at the building entrance switch or at pole top disconnects, where provided.

8-6.2.2. Layout drawings and other pertinent information should be submitted through proper channels for review and comment from the standpoint of explosives safety when use is proposed of an existing general cargo pier or wharf that has not been evaluated for the handling of explosives and ammunition (see paragraph 8-1.2). Site approval is required for any permanent increase of pier or wharf explosive limits.

8-6.2.3. Piers that have combustible piling or deck material should be provided with transverse fire stops in accordance with NFPA 307 (see paragraph 4-3.12.2).

8-6.2.4. Piers or wharves used to support loading/unloading of limited amounts of ammunition and explosives to combatants or small boats do not need to meet the requirements of paragraphs 8-6.1 or 8-6.2 with the exception of paragraph 8-6.2.3 above.

8-6.3. ELECTRIC POWER AND LIGHTING. All electrical installations, lighting fixtures, and electrical equipment used on ammunition handling piers or wharves shall comply with the requirements for damp or wet locations as prescribed in MIL-HDBK-1004 and MIL-HDBK-1005. When it has been determined that explosive dust, gases, or vapors may be present in a railcar or in the hold of a ship, all lighting fixtures and electrical equipment shall comply with the requirements for the hazardous (classified) location as defined in the National Electrical Code, NFPA 70. All fixtures and equipment shall be bonded and grounded in accordance with chapters 5 and 6. Floodlights on the piers and wharves should be arranged so that there is no glare or blind spots in aisles and between railcars.

8-6.4. SCUTTLING SITES. A properly located scuttling site should be provided, if practical, in the event a vessel at a pier catches fire and must be moved to avert damage to other ships or the pier. Since an explosion may occur while the vessel is being moved, the best location for flooding or sinking is one that gives the best available protection to other ships, the pier, and the shore installation. The scuttling site should have sufficient sea room and water depth to permit the sinking of the largest vessel that may be handled at the installation to a depth such that the holds can be completely flooded at low water. The location of the scuttling site will depend on the greatest net quantity of mass-detonating explosives that may be in a single ship at any one time (refer to paragraph 7-10.6).

8-6.5. PORT BUILDINGS. Port buildings in which personnel are to be regularly employed or housed shall be designed so that the windows face away from the piers or wharves. Also, windows containing glass shall be backed up by heavy wire screen fixed in position, or shatterproof glazing used instead of glass as discussed in paragraph 8-4.1.11. Refer to paragraph 8-6.1.8 for additional data regarding design of port buildings.

8-6.6. EXPLOSIVES ANCHORAGES. When conditions dictate, explosives anchorages should be provided for loading and unloading vessels and for anchoring vessels carrying cargo ammunition. The application of quantity-distance criteria to explosives anchorages is given in paragraph 7-10.5. The

ESQD arc will be drawn from the outer edge of a circle, which represents the swing of a ship off its anchor chain. The location of an explosives anchorage shall be separated not only from the main ship channel or from normally traversed routes of ships entering or leaving the harbor by the distances in table 7-7, column 9, but also by turning circles and stopping distances of the ships. Assuming that the diameter of the turning circle of a ship is 1,000 yards, an explosives anchorage shall be located so that a ship in the channel with a jammed rudder will clear an anchoraged explosives-laden ship. To provide a sufficient turning circle, the separation distance shall be not less than 1,000 yards.

8-6.7. WHARF YARD. Wharf yards are sited near piers or wharves for short term truck or railcar staging prior to delivery to the piers or wharves. Separation of a wharf yard from the pier it serves by a distance sufficient to prevent immediate communication of an explosion ($11W^{1/3}$) may be impractical. In such cases, the wharf yard will be considered part of the ship or barge unit and added to it for determining the total amount of explosives for computing quantity distance requirements, and the outer limit of the wharf yard shall be considered as the ship unit boundary.

8-7. RAILROAD FACILITIES AND EQUIPMENT.

The Department of Transportation safety regulations pertaining to safety devices, safety guards, design of equipment, and the like are mandatory for railway equipment involved in transporting ammunition and explosives on naval shore activities. Additional requirements for railway equipment for transporting ammunition and explosives are covered in the following paragraphs. Railroad operating requirements are covered in paragraph 12-7.3. Siting requirements for rail lines are covered in paragraphs 7-8.1.2 and 7-8.1.3.

8-7.1. TRACKAGE.

8-7.1.1. Clearances. Minimum clearance from centerline of standard gage tracks to the near edge of loading docks, etc., should be not less than 5 feet 9 inches. The minimum distance between track centers should be not less than 13 feet. The minimum overhead clearance from top of rail to a wire or structure should be 22 feet. The minimum vertical distance from top of rail to any overhead power wire shall be in accordance with the requirements of the specifications of the Association of American Railroads. Where side clearance is inadequate for a man on the side of a car, warning signs shall be posted at approaches to the obstruction. Where overhead clearance of 22 feet is not obtainable, telltale head toppers should be installed above the rails 100 to 200 feet from both sides of the obstacles.

8-7.1.2. Layout. Tracks in classification yards should be arranged so that the center distance between tracks is not less than 13 feet. Enough crossovers shall be provided to switch cars and permit rapid removal of cars in case of an emergency. Railroad lines serving hazardous areas should be looped with at least two exits out of the area provided for railroad cars containing explosives or highly flammable materials. Track layout requirements at pier and wharf facilities are covered in paragraph 8-8.2.

8-7.1.3. Dead End Tracks. Dead end tracks shall be provided with substantial bumper blocks or similar equipment.

8-7.1.4. Gratings. Gratings should be installed to cover hoppers under tracks used for unloading materials from dump cars.

8-7.1.5. Trestle Walkway. On trestles where persons walk, a walkway should be provided on one side extending at least 5 feet from the nearest rail. Standard handrails 42 inches high with midrail and standard toeboard shall be installed at the outer edge.

8-7.1.6. Grounding. Rails shall be grounded as discussed in paragraph 6-6.3.1.

8-7.2. GRADE CROSSINGS. Grade crossings shall be prominently posted on each side with standard railroad crossing signs, electric crossing lights, crossing gates, and/or electric crossing bells. To warn motorists of a railroad crossing location, the road shall be marked with an “X” painted on the road in clear view of passing motorists. The center of the X shall be 215 feet and the warning sign shall be 250 feet from the nearest track. Both the crossing and the warning sign shall appear on each side of the crossing. Commanding officers shall be responsible for designating crossings at which motor vehicles must stop, based on a survey of railroad grade crossings to determine the hazard at each crossing, considering volume of traffic, visibility, and past experience at the location. Openings between rails should be suitably filled at grade crossings.

8-8. TRANSPORTATION NETWORK.

8-8.1. ROADS. Good roads for use by guards and firefighters and for the safe transportation of ammunition and explosives shall be provided within an ammunition activity. The road system serving magazines, operating buildings, or pier and wharf facilities should be arranged so that vehicles carrying explosives will not be isolated on dead-end roads in case of fire or explosion. Roads for normal traffic between other areas shall not pass through the magazine area at less than PTR distance.

8-8.1.1. Main Roads. Main or primary roads within the installation should be at least two lane highways with a 22-foot wide pavement surface together with shoulders 6 feet to 8 feet in width. Where such roads pass through a functional area and where traffic is likely to become congested, the shoulders should be of a type suitable for parallel vehicle parking and capable of providing an additional traffic lane for use in times of emergency. The main access road to the installation's pier facility should meet these standards with the shoulders constructed flush with the pavement and capable of supporting a vehicle making emergency stops.

8-8.2. PORT TRACK LAYOUT. A separate siding should be provided for stripping dunnage from empty cars when it is not feasible to strip the cars on the piers. This siding should connect directly with the pier service line, preferably by switch connections at each end of the siding. Classification and other yards should contain the amount of trackage required for the maximum number of trains that would be delivered under normal conditions by the serving railroads. Railroad tracks should be looped on piers and wharves constructed in the future and on existing piers and wharves, when practical. A wharf yard may be provided in the immediate vicinity of the pier or wharf to permit reshuffling of cars instead of doing the work on the pier or wharf. Design criteria established by NAVFAC shall be used.

8-9. IDENTIFICATION OF FACILITIES.

All buildings and magazines of all types, including open storage sites, containing ammunition or explosives or chemical and inert components normally associated with them, shall be marked to provide rapid and positive identification of the facilities.

8-9.1. IDENTIFICATION SYSTEM. The identification system, as a minimum, consists of the NAVFAC building number in accordance with NAVSO P-1000, Navy Comptroller Manual Volume 3. This number will be prominently displayed on the facility or at the entrance of an open storage site. This number will be in addition to any other number appearing on or near the facility as desired by the station or as

required by other authority. The number shall be at least 6 inches high. Any other markings which appear on or near a facility shall be so displayed as to not confuse the identification of a facility.

8-9.2. MAGAZINE DESIGNATOR. The magazine designator system included in previous versions of this manual is not applicable to new magazine designs and use. Continued use of the three group symbol of numbers and letters on existing magazines is still authorized, but not required.

CHAPTER 9
PRODUCTION

9-1. INTRODUCTION.

This chapter presents Department of Navy policy to guide personnel engaged in the production, maintenance, and renovation of ammunition and explosives. General rules, regulations, and guidance presented describe safe methods and procedures for continuity of production, protection of personnel, and prevention of property damage. However, due to the man variables involved in the production of ammunition and explosives and the continuing evolution of technology and materials, it is impossible to provide specific guidelines for every conceivable operation involving energetic materials. Therefore, the primary tool activities shall employ to assess and manage risk associated with the production of ammunition and explosives is a Mishap Risk Assessment (MRA); see paragraph 7-7.3). The MRA shall be conducted on the proposed design, set-up or modification of all explosive production activities. Safety regulations for activities performing research, development, test and evaluation (RDT&E) operations that differ from the general guidance of this chapter are provided in appendix F.

9-2. GENERAL REQUIREMENTS.

The requirements identified in this section apply to all types of operations which cross the lines of equipment and type of ammunition and explosives in production. These requirements should be addressed as part of the planning process and implemented in formal documentation as part of the production process.

9-2.1. MISHAP RISK ASSESSMENT. As stated above, an MRA shall be conducted for all explosive operations as required by paragraphs 2-1.2 and 7-7.3. The major purpose of the MRA is to identify hazards associated with each explosive operation or item in the production environment and to establish controls for those hazards with respect to personnel protection and prevention of property damage. The MRA will be used as input to the Standard Operating Procedure (SOP).

9-2.2. STANDARD OPERATING PROCEDURE. Each activity shall prepare, update and maintain a SOP in accordance with paragraph 2-1.1. The SOP will be based on the MRA, requirements established by the technical manual and the requirements of this chapter. SOPs will take into consideration minimizing the number of personnel and quantity of energetic material in any operating area to the minimum required for the operation.

9-2.3. FACILITY AND EQUIPMENT. The facility and equipment requirements identified below shall be evaluated and properly implemented in production processes and SOPs.

9-2.3.1. Facility Site Approval. Ensure that each facility is site-approved for the operation in accordance with chapter 8 of this document.

9-2.3.2. Lightning and Grounding. Ensure that the lightning and grounding requirements of paragraph 5-5 are met.

9-2.3.3. Fire Protection. Ensure that adequate fire protection and suppression systems are installed, or waiver obtained, in accordance with paragraph 4-3.9.

9-2.3.4. Facility Layout. Operations shall be designed such that benches, tables, equipment, materials, ingredients and products are arranged to provide operators with an immediate unobstructed exit from the bay, room or facility.

9-2.3.5. Environmental/Occupational Safety Compliance. Ensure that the facility, equipment and material meet the applicable requirements of the DODM 4715.26 DoD Military Munitions Rule (MR) Implementation Procedures, Environmental Protection Agency, Occupational Policy, Safety and Health Act, National Electric Code and National Fire Protection Act as designed or used.

9-2.4. PERSONNEL TRAINING AND PROTECTION.

9-2.4.1. Operator Qualification/Certification. Safe production operations demand that the operator be properly trained and instructed in safe practices before starting work. Observation of the new operator's work shall be continued until the supervisor is fully satisfied that safe practices are being followed and the operator is trained, qualified and certified for the explosive operations in accordance with paragraphs 2-3.2 and 2-3.3. A regular checkup shall be made thereafter to assure that safe methods of operation are permanently established.

9-2.4.2. Personal Protective Equipment. As part of the SOP development process, Personal Protective Equipment (PPE) shall be identified in accordance with paragraph 2-4 and incorporated into the document.

9-2.4.3. Medical Monitoring. Physiological hazards of the materials and chemicals involved in the production process shall be identified, evaluated as part of the MRA, and appropriate medical screening implemented per paragraph 2-3.1.

9-2.4.4. Remote Operations. As part of the MRA, the exposure of personnel to explosive and fire hazards shall be considered. Operating personnel will be afforded the best protection possible within the constraints of technology, sensitivity of materials and the operations being performed. Options include remote controlled operation, use of shielding, and unshielded (attendant) operations.

a. Remote controlled operations shall have warning lights and/or physical barricades in place and operational.

b. Ensure that remotely controlled operations:

(1) Allow for operator viewing by closed circuit TV monitors, viewports certified per paragraph 7-7.3 or other indirect viewing methods.

(2) Allow the operator to remotely activate the fire protection/suppression system.

(3) Have considered and implemented applicable interlocking equipment with the fire protection/ suppression system to minimize severity of reactions of the energetic materials.

(4) Meet the personnel protection requirements of paragraph 7-7.4.1.

c. Specific information on the design of operational shields is found in paragraph 8-4.1.4, interlock requirements for cell doors used as shields are found in paragraph 8-4.3.6.3.

9-2.4.5. Red Flag. A red flag shall be displayed prominently near the entrance to any building or location whenever work connected with explosives or ammunition is in progress. The red flag is to indicate from a distance that personnel and explosives are in the building.

9-2.5. CONCURRENT OPERATIONS. Concurrent operations shall take place in accordance with the following provisions:

9-2.5.1. Production Schedules. If production schedules necessitate concurrent loading of ammunition of different item designations, the grouping of the work shall be arranged to avoid mutual exposure of items presenting dissimilar hazards. When more than one explosive material is handled on a line, or within a building or room, mutual contamination shall be avoided. Particular attention should be given to both portable and stationary vacuum systems as well as to explosives scrap collection.

9-2.5.2. Concurrent Storage. Care should be exercised to properly separate material in service magazines as well as in operating buildings as defined in paragraph 11-6.3. When loading of a different item of ammunition is contemplated on a given line or in a building, the current job should be completed and excess material removed promptly to eliminate hazards resulting from mixing of dissimilar materials. Permissible compatibility mixtures are addressed in NAVSEA SW020-AC-SAF-010, Table 2-8. Compatibility requirements must be met within operating/assembly buildings for complete/all-up rounds, based on the compatibility group shown in NAVSEA SW020-AC-SAF-010, Table 3-1, under hazard class, with exception of transfer points listed in paragraph 12-9, or unless authorized in the facility site approval. Compatibility requirements do not apply to explosive items that are components of the same ammunition and explosive product and are part of the work in process within an operating/assembly building.

9-2.5.3. Separation and Marking. When two or more explosives are used in a line or within a building, and mixing is not intended, they shall be placed in separate locations and marked appropriately.

9-2.5.4. Personnel Exposure. The exposure of personnel in locations where concurrent operations must be performed shall be controlled so that exposure of personnel is no greater than it would be if a single operation were performed. When a relatively large quantity of explosive material is present, operations requiring only a small number of personnel shall not be performed on the same line with operations requiring a large number of personnel.

9-2.6. HOUSEKEEPING. Good housekeeping is essential to safe production operations.

9-2.6.1. Floors of work areas should be kept dry, clean, and free from obstructions to ensure safe and secure footing except when procedures indicate the need to keep floor wet for safety and/or quality issues.

9-2.6.2. Spilled material shall be removed promptly, and dust/ shavings should be removed continuously. Scrap materials and other nonessential materials should not be allowed to accumulate.

9-2.6.3. Good housekeeping at operations require the proper location of supplied stocks and timely movement of materials to coincide with processing operations. Materials and support equipment should be located to maintain egress and minimize clutter.

9-2.6.4. Clean-up and decontamination processes shall be established based on the next scheduled use of the facility/equipment; that is, end of shift turn over to incoming personnel, end of normal operation, facility modification/repairs, equipment removal for renovations, etc.

9-2.6.5. All waste, hazardous waste, and explosive hazardous waste shall be collected, stored, and disposed of in accordance with applicable Federal, State, and local requirements.

9-2.7. FACILITY AND EQUIPMENT MAINTENANCE.

9-2.7.1. Preventive Maintenance. Preventive maintenance programs shall be developed for the equipment and facility. A preventive maintenance plan for all major and minor equipment shall be established, documented, updated and executed.

a. Equipment shall be maintained and operated in accordance with manufacturers' standards unless the results of the MRA and/or prior experience indicate a more conservative approach.

b. Operators shall be given step-by-step procedures for inspection, maintenance, repair and adjustment operations and their periodicity. Operators will be informed of those operations that must be performed by maintenance personnel.

c. An approved SOP shall cover any maintenance process involving contact with ammunition and explosives.

d. Before making any repairs or adjustments on machinery, the machine shall be stopped, switches or other controls shall be "locked out," and the machine tagged. A careful check should be made before starting the machine to determine that everyone is standing clear. Machine guards shall be replaced upon completion of repairs, adjustments, etc., and before switches or other controls are made operative.

9-2.7.2. Maintenance Personnel. Maintenance personnel shall be properly trained and qualified to perform their assigned functions. Certification to OPNAVINST 8023.24 (series) or MCO 8023.3 (series) shall be completed, if necessary. Maintenance personnel, as well as visitors and transients, will also be required to wear the same PPE that operating personnel are required to wear. As such, maintenance personnel shall wear conductive shoes when entering buildings where conductive shoes are required. Leg stats or conductive rubbers over street shoes will suffice.

CAUTION

Since electricians should not be allowed to work on live electrical equipment while wearing conductive shoes (see paragraph 5-5.3.2), all explosives must be removed from an area where and when this type of work is required so that the electrician may wear nonconductive shoes.

9-2.8. EXPLOSIVES RECOVERY AND REUSE. All loose explosives gathered from floor sweepings of operating buildings should be destroyed. Explosives recovered from sources other than ammunition breakdown operations or from operating equipment shall be thoroughly inspected by operating supervisors and reused, screened, reprocessed, or destroyed as appropriate. Explosives contaminated with dirt, dust, grit, or metallic objects shall be destroyed. Melt-loaded explosives known to be contaminated shall not be reused unless it is practical to remelt them and draw off clean material. Explosives scrap from concurrent operations should be segregated to prevent exposure to dissimilar

explosive hazards. It should be noted that all material to be destroyed must meet all environmental and explosives safety requirements.

9-2.9. AUTHORIZED TOOLS. Tools including safety and power tools, fasteners, brushes, and compressed air authorized for use in operations involving ammunition and explosives shall be used in accordance with the SOP and the following provisions.

9-2.9.1. Manual Safety Hand Tools.

a. Shall be selected based on the strength of material needed to safely and adequately perform the operation and the ability to dissipate static electricity.

CAUTION

Beryllium alloys should only be used if no other suitable material is available. Finely powdered beryllium is extremely toxic. Never subject beryllium tools to any grinding, cutting, or abrasive process that creates dust, chips, shavings, etc.

b. Shall be constructed of wood, fiber, leather, bronze, brass, aluminum, lead, “K” monel metal, stainless steels, chrome plated steels, polymeric compounds, and certain ceramics that have little or no spark-producing characteristics under normal conditions of use.

NOTE

If the use of ferrous metal tools is required because of their strength and wear characteristics, the activity safety office shall approve their use.

c. Shall be used in locations where exposed explosives, hazardous concentrations of explosive dust, flammable gases, or vapors exist or may exist. When used in the vicinity of hazardous materials, safety tools shall be clean and handled with utmost care. They shall be checked prior to use and upon completion of work.

9-2.9.2. Power Tools. Power tools shall not be used in any operation involving ammunition and explosives or in locations containing explosives unless specifically authorized and covered by an SOP. When the use of power tools is authorized for specific operations, the requirements and conditions applicable to that use shall be completely and explicitly defined in the SOP. These include tool performance characteristics, power requirements, grounding and/or shielding, operator qualification, operator protection, area and item preparations and/or restrictions, and any other requirements that govern the selection and use of power tools.

a. Personnel required to use power tools shall be thoroughly trained in the safe operating practices of these tools.

b. The use of electric (including battery) powered tools on items containing electroexplosive devices (EED) is prohibited unless the hazard is acceptable in the MRA and the SOP specifically authorizes its use.

c. The use of air powered tools is authorized for installation/removal of fasteners on items with/without EEDs installed if the fasteners do not secure parts that are directly in contact with explosives.

d. The use of certain electric, pneumatic or air-operated power tools has been authorized in specific ammunition maintenance operations. For an example, refer to paragraph 12-3.2.6 for approved use of pneumatic nailers on pre-fabricated dunnaging.

9-2.9.3. Explosive-Actuated Power Tools.

a. Explosive-actuated power tools shall not be used in any operation involving ammunition or explosives except as required and determined necessary by explosive ordnance disposal (EOD) personnel while performing their duties.

b. Explosive-actuated power tools may be used for facility construction, modification, maintenance and repair provided the following requirements are met:

(1) All ammunition and explosives are removed from the facility and area immediately surrounding the facility.

(2) The tool and the cartridges shall be stored in separate containers.

(3) The cartridge size shall be the minimum necessary for the application.

(4) Procedures shall be provided for using the tool. The procedures shall include, as a minimum, the guidance provided in 29 CFR 1910.243 and the manufacturer's manual.

9-2.9.4. Brushes. Wire brushes may be used for cleaning explosives processing equipment only when other methods of cleaning are ineffective. If wire brushes are used, thorough inspection should be made after cleaning to ensure that bristles do not remain in the equipment. When possible, nonferrous wire brushes should be used. Use of fiber brushes in place of hairbrushes is recommended to reduce generation of static electricity. Nonferrous wire brushes shall be used to perform exterior maintenance operations like removal of paint, rust, corrosion, and heavy deposits of dirt from ammunition and explosive-loaded components. Nonmetallic brushes shall be used when cleaning threaded surfaces of ammunition and explosive-loaded components.

9-2.9.5. Fasteners. Fasteners; that is, nails, screws, tacks, etc. shall only be driven into a loaded container to close the container or to attach item identification, packing lists or other similar information.

9-2.9.6. Compressed Air. Compressed air presents a serious hazard. Its use for cleaning and drying purposes should be permitted only when all other methods have failed. When it is necessary to use compressed air for cleaning or drying, adequate controls must be provided to protect the user, adjacent operators and casuals. Enclosures of adequate size to house movable items to be cleaned by air should be used. These enclosures should have only one side open and should have adequate mechanical exhaust ventilation. Each air hose should be equipped with a nozzle or guard specifically designed to release air pressure harmlessly (when the nozzle is directed against a restricting surface). In addition, the following precautions must be observed:

a. The minimum amount of air pressure required to perform the specific operations must be used. Compressed air used for cleaning shall comply with Occupational Safety and Health Administration (OSHA) standards.

b. All users of compressed air must be provided with and wear eye protection.

c. The use of compressed air for removing foreign material from the hands, arms, or personal attire is prohibited.

9-3. EXPLOSIVE PRODUCTION EQUIPMENT.

Explosive production equipment described in this section includes major equipment to produce, maintain, renovate and demilitarize ammunition and ammunition components. Equipment includes all major equipment, minor equipment, tools, Weight Handling Equipment (WHE), Material Handling Equipment (MHE), Ordnance Handling Equipment (OHE), and Weapons Support Equipment (WSE). WHE, MHE, OHE, and WSE requirements are found in chapter 10.

9-3.1. MAJOR EQUIPMENT. Major equipment is defined as the primary pieces of equipment supporting an operation; that is, screeners, mixers, blenders, presses, test equipment, lathes, saws, etc. Major equipment includes all production equipment affecting the safety of operations and/or quality of the product. The safety of design and installation of all major equipment shall have been evaluated in the MRA and reviewed and validated by responsible engineering personnel, line managers, and the commanding officer or designee. Procedures for the use of major equipment shall be documented in the SOP. Procedures for review and approval of unique RDT&E equipment or existing equipment used for a new application is discussed in paragraph F-7.2.

9-3.2. MINOR EQUIPMENT. Minor equipment is considered to be all of the tools, jigs, fixtures, etc. required to be used with major equipment.

9-3.3. GENERAL REQUIREMENTS. All equipment shall be:

9-3.3.1. Analyzed to evaluate the hazards associated with the operation and maintenance of the equipment. Hazards will be documented in an MRA.

9-3.3.2. Listed in the SOP. Listing of the equipment in the SOP serves as the official written authorization for use.

9-3.3.3. Constructed to prevent ingredients from all undesired energy inputs; that is, pinching, friction, impact, heat, light, etc.

9-3.3.4. Placed on a firm foundation and when stationary, properly secured in place before being operated.

9-3.3.5. Fabricated of food or pharmaceutical grade materials, whenever possible. The equipment should also be constructed with sanitary connections. Threaded pipe connections in contact with energetic ingredients/products should be avoided and shall be prohibited unless there are sufficient sanitary connections to allow disassembly and cleaning without disturbing the threaded connections.

9-3.3.6. Compatible with all process materials and the process/ambient environments.

9-3.3.7. Designed for ease and safety of disassembly, inspection and cleaning.

9-3.4. EXPLOSIVE COLLECTION SYSTEMS. An explosive collection system is a system whose primary purpose is to remove finely divided explosives (for example, chips, dusts, shavings, etc.) from the area to minimize the probability of an explosive incident or lessen its severity. Explosive collection

systems are frequently used when propellants and explosives are machined. Both dry and wet explosives dust collection systems are used to reduce explosive hazards during the production of ammunition. Generally these filters are subsequently handled as explosive hazardous waste.

9-3.4.1. General Requirements.

a. Collection systems and chambers shall be designed to prevent pinching of explosives, especially dust or thin layers, between metal parts. Pipes, tubes or ducts through which dust is conveyed shall have externally flanged, welded, or rubber connections. The design shall address all aspects of compatibility, conductivity, ease and frequency of cleaning and inspection, and long term reliability and maintenance. Threaded connections are prohibited in direct contact with explosive materials.

b. Pipes or tubes through which energetic materials are conveyed shall be designed to avoid dead spots or propagation of detonation. The design shall establish pipe characteristics including material selection, diameter and turn radii in relation to the material being transferred, its ignition and detonation characteristics, and transfer rates. For example, solids transfer may require a large turn radius to prevent the formation of dead spots, while for liquids a 180-degree radius may be advisable to prevent detonation propagation down the pipe.

c. The number of points where vacuum is applied shall be kept to a minimum. If possible, each room requiring vacuum collection should have a separate exhaust line to the primary collection chamber, but no more than two rooms shall be serviced by a common header to the primary collection chamber. The length of vacuum lines from origin points to the collection chambers shall be as short as possible. Not more than two primary collectors should be connected to a single-secondary collector whether the collector is wet or dry.

d. If a hazard assessment indicates there is no explosive electrostatic problem or the operation does not create a dust concentration that is a severe health hazard, manual operation of the suction hose to remove explosive dusts is preferred to a permanent attachment. Interconnection of manually operated hose connections to explosives dust-producing machines should be avoided.

e. Explosive dusts shall be removed from the collection chambers at least once every shift to eliminate unnecessary and hazardous concentrations of explosives, and the entire system should be cleaned weekly, dismantling the parts if necessary. See paragraph 4-1.7 for cleaning areas that contain combustible and explosive scrap.

f. The entire explosives dust collection system shall be electrically grounded, and the ground shall be tested on a routine basis. See paragraph 5-5 for grounding requirements.

9-3.4.2. Dry Vacuum Collection Systems. In dry vacuum collection systems, to prevent explosive dust from entering the vacuum producer, two collection chambers should be installed in series ahead of the pump or exhauster.

a. Stationary, dry-type explosive dust collection chambers should be located outside operating buildings, in the open, or in a building built exclusively for the purpose whenever practical. In order to protect operating personnel resulting from an incident involving the collection chamber, a protection barrier shall be provided between the operating building and the location of the collection chamber.

(1) If the collection chamber contains 25 pounds of explosives or less, the protective barrier may be a 12-inch reinforced concrete wall located a minimum of 8 feet away from the operating building. The collection chamber must be separated from cell walls by at least 3 feet.

(2) If the collection chamber contains more than 25 pounds of explosives and is separated from the operating building by a 12-inch reinforced concrete wall, the wall must be separated from the operating building by a minimum of unbarricaded intraline distance.

(3) If the protective barrier meets the requirements of paragraph 8-4.1.4 for operational shields (including the required 3-foot distance between the barrier and the explosives), for the quantity of explosive in the collection chamber, or if they comply with the requirements of paragraph 8-2.5 for barricades, the cell may be placed at a minimum of barricaded intraline distance from the operation building.

(4) Barricaded and unbarricaded intraline distances will be based on the quantity of explosives in the collection chamber. The location must meet the quantity-distance (Q-D) requirements of chapter 7.

b. When it is not possible to locate the dry-type collection chamber outside the operating building, a separate room in the building may be set aside for this purpose. This room shall not contain other operations, nor shall it be used as a communicating corridor or passageway between other operating locations within the building. When explosives are being collected, the walls of the room must meet the operational shielding requirements in paragraph 8-4.1.4 for the quantity of explosives in the collection chamber. If more than one collection chamber is located in the room, the room must be divided into cells with only one collection chamber per cell.

c. Dry-type portable vacuum collectors shall not be located in a bay or cell where explosives are present. They may be positioned outside the building or in a separate cell if the cell has substantial dividing walls for quantities of explosives not exceeding 5 pounds total Net Explosive Weight (NEW) in the collector.

9-3.4.3. Wet-Type Collection Systems.

a. The design of wet collectors shall allow the proper immersion of explosives, the breakup of air bubbles to release airborne particles, and the removal of moisture from the air before it leaves the collector. Removing moisture from the air prevents moistened particles of explosives from entering the small piping between the collector and the exhauster or pump.

b. Stationary and portable wet-type collectors may be placed in the explosives operating bays or cells provided the quantity of explosives in the collectors does not exceed 5 pounds. If placed in separate cells, the explosive limits for the collectors may be increased to the amount reflecting the capabilities of the cell walls as operational shields (paragraph 8-4.1.4). For greater quantities, the location requirements set forth in paragraph 9-3.4.2.a are applicable.

9-3.5. CONVEYORS/CHUTE SYSTEMS. Conveyors are used for transporting items or groups of items of ammunition and explosives from one operating building to another or from bay to bay within an operating building. Precautions regarding the safe handling of ammunition items, as outlined in

paragraph 10-1.1, shall be observed. Loaded ammunition items should not be left on conveyors during non-operating periods.

9-3.5.1. Separation Distances. Ammunition and explosives being moved on conveyors in operating lines shall be separated from each other by sufficient distance to prevent propagation. Minimum separation distances ($D=11W_{1/3}$) for bulk explosives are given in table 9-1.

Table 9-1. Minimum Separation Distances for Bulk Explosives on Conveyors

QUANTITY (lbs)	DISTANCE (ft)
50	40.5
100	51.0
150	58.4
200	64.3
250	69.1
300	73.5
350	77.5
400	81.0
450	84.1
500	87.5
550	90.0
600	93.0

NOTE: Distance is based on formula $D=11W^{1/3}$

9-3.5.2. Installation Requirements. The following requirements shall be used for the installation of conveyor/chute systems:

a. Crossover walks for employees should be constructed at reasonable intervals. Crossover walks, however, should not be considered an acceptable method for providing access to an exit from a building that constitutes a severe fire or explosion exposure. Conveyors should not be placed between an operator and his nearest exit.

b. Working conditions should be arranged so that employees will not be required to stand on supporting frames to unload or load materials.

c. Conveyor/chute systems shall be designed to prevent personal injury, explosive hazards, etc. Guards can provide this type of protection. Examples include:

(1) Guards should be installed at corners or turns where material is most likely to fall; when handling explosive materials, this requirement is mandatory.

(2) Conveyors installed flush with the floor should be guarded except at the loading and unloading points to prevent workmen from stepping on the moving conveyor.

(3) Mechanical guards should be installed around the driving mechanism and where belts travel around tail drums to prevent personnel from being caught in the equipment. Practical guards should be installed where necessary when chain belts are used, particularly when equipped with prongs, lugs, hooks, buckets, or scrapers.

(4) Conveyors running in pits or tunnels should have ample clearance and should be guarded to prevent employees from being caught.

(5) Where conveyors pass from one floor to another, railings and toeboards should enclose the openings.

9-3.5.3. Gravity Conveyors. Portable gravity conveyors/chutes are authorized for use provided:

a. All sections of gravity roller conveyors should be equipped with some type of positive locking device to prevent them from working apart during operations.

b. Supports should be sufficiently substantial to give solid support under operating conditions; that is, manufacturer supplied, horse type with an adjustable horizontal member allowing variation in elevation, or three dimensional block type supports.

c. Containers of ammunition, explosives or hazardous materials shall not be used as conveyor supports. Other types of boxes or containers should not be used as supports unless they are safe from overturning and are securely tied together when more than one is to be used.

d. There shall be no drop at the end of the conveyor/chute or there shall be thick mats to protect the contents from drop damage per paragraph 10-1.1.9.

e. Conveyor sections and supports should be frequently inspected for unsafe conditions.

9-3.5.4. Mechanical Conveyors. Mechanical conveyors are usually safer than other methods for moving materials. However, certain precautions in addition to those outlined above are necessary.

a. Devices for stopping the conveyor should be located at loading and unloading stations, at drives and take-up ends, and at other reasonable intervals along the conveyor. Emergency switches should be installed within easy reach of employees at points where supervisors or other employees cannot readily see their activities.

b. Workers should not be permitted to remove material that sticks to the tail drums or pulleys while they are in motion. Fixed scrapers and revolving brushes may be used to make it unnecessary to perform this operation by hand.

c. Screw conveyor troughs should be covered with removable covers and no attempt shall be made to dislodge jammed material without first shutting off the power. Charging openings to screw conveyors should be covered with a grating, or the opening boxed or railed in to prevent workers from stepping into them.

d. All power conveyors shall be electrically grounded.

e. Conveyors running into chutes that are enclosed should have a simple mechanically or electrically operated warning device to caution that material is about to be delivered from the chute.

9-3.6. DRYING/CURING OVENS. Drying and curing ovens are used to process raw materials prior to incorporation into energetic materials and post process curing of finished products. The requirements for drying/curing ovens are as follows:

9-3.6.1. Forced-air, indirect, single-pass, steam or friction air heaters should be used. Electric resistive heaters are permitted if other equipment is not practical.

9-3.6.2. Open and sealed flame units are prohibited.

9-3.6.3. The safe temperature for drying each material shall be established and then not exceeded during drying processes. The effect of impurities should be carefully considered when establishing safe drying temperatures.

9-3.6.4. Thermostatic controls shall be used to control the maximum temperature and the temperature shall be recorded at regular intervals. Controls for steam systems shall have fail/safe valves installed that will shut off the steam supply in case of mechanical or electrical failure.

9-3.6.5. High level alarms, automatic shut-off devices and data collection systems for process variables and “in-process” items shall be in place. Manual checks shall be done when remote monitoring is not installed or is non-operational.

9-3.6.6. Trays where material is spread for drying shall be of a suitable substance, preferably nonferrous metal and should be grounded.

9-3.7. SPRAY PAINTING. Several thousand volts have been recorded between items being painted and ground during spray painting operations. The requirements of the following paragraphs will be used in the design of spray painting equipment and development of SOPs.

9-3.7.1. Spray Booths. When paint is sprayed in standard spray booths using conventional equipment, the equipment shall be installed in accordance with the National Electrical Code (NEC), National Fire Protection Association (NFPA) 70. Procedures for safe spray application operations are contained in NFPA 33. In addition, the nozzles of all spray guns and the items being painted shall be electrically bonded to the same point on either structural steel or a static ground during spray painting operations in accordance with paragraph 5-7.2.

9-3.7.2. Specific Requirements.

a. All spray painting operations involving flammable liquids shall comply with the requirements of OSHA, NFPA, or this regulation, whichever is more restrictive.

b. Water wash or dry filter-type spray booths shall be used exclusively for loaded ammunition. Filters for dry-type booths must not support combustion when clean and must be capable of effectively arresting paint overspray. They must be replaced whenever the type of paint being sprayed is changed. Paint-encrusted filters shall be disposed of promptly and in accordance with environmental requirements.

c. Except where separated by a partition, electrical equipment within 20 feet of a spray area where loaded ammunition is painted shall conform with the requirements of NEC Class I, Division 1, Group D installation for hazardous locations. Every effort should be made to eliminate the use of electrical equipment within the aforementioned distance.

d. Automatic sprinklers shall be installed above and 20 feet horizontally beyond the perimeter of the booth, if the building in which the spray booth is located is not provided with sprinkler protection. In addition, automatic sprinkler protection shall be installed in exhaust ducts 6 feet or more in length and the sprinkler heads shall be located not more than 12 feet apart in those ducts that pass through combustible walls, ceilings, or roof structures.

e. Controls for paint spray booth ventilating fan motors shall be interlocked with the controls for the paint sprayer. With this arrangement, failure of the ventilating system will shut off power to the paint sprayer.

f. Where it is necessary to set up field operations and the requirements of paragraph a. above cannot be met, spray painting of sizable quantities of loaded ammunition or inert items is permissible provided:

(1) Paint booths are constructed of noncombustible material.

(2) An exhaust system with exhaust fan is installed to remove paint fumes from the booth (the fan may be powered by an air motor).

(3) At least two CO_2 or foam-type extinguishers are installed within the booth with rate-of-rise actuated nozzle attachments. Two manual-type CO_2 or foam-type portable fire extinguishers must also be provided at the paint spray booth or operation.

(4) Special precautions are taken to keep the booth clean and prevent the accumulation of paint on the surface of the booth or fire extinguisher nozzles.

(5) The number of items in the booth at any one time is restricted to the minimum number required for efficient and continuous operation.

(6) The area within 50 feet of the paint booth is kept free of combustible material, such as dry vegetation, wooden pallets, combustible crating, or packing materials.

(7) Paint and chemical mixing operations, supplies, and air compressors are located at least 50 feet from the booth.

(8) Personnel limits are maintained at the minimum consistent with efficient safe operation.

g. If the quantity of loaded ammunition or inert items to be spray painted in an outside location does not warrant the provision of a paint booth, the operation may be performed in the open, provided:

(1) The area within 50 feet of the spray paint operation is kept clean and free from extraneous combustible material, air compressors, and paint mixing operations.

(2) At least two class 4B,C portable fire extinguishers are provided at the spray painting operation.

(3) Personnel are protected from toxic materials by means of respirators approved for the amount and type of exposure involved.

(4) Personnel limits are maintained at the minimum required for efficient safe operation.

9-3.8. GRIT BLAST CLEANING. Locations for the installation of grit blast cleaning equipment shall be approved through the site approval process. Grit blast cleaning equipment can be installed in work areas or rooms that do not have operational shielding. The dust collector for the grit blast cleaning equipment shall be located outside the operating building. A regular schedule should be established for emptying the collector.

9-4. EXPLOSIVE OPERATIONS.

Each explosive operation needs to be tailored to the raw materials and end products being produced or processed in the particular operation. A hazard analysis shall be conducted for each specific explosive operation prior to start of the operation in order to provide for specific operating conditions and procedures. It is imperative to use the MRA to evaluate the appropriate use of each piece of equipment for the materials being processed and identify particular hazards involved including such factors as: initiation sensitivity, quantity of energetic material, anticipated energy output, rate of energy release, potential for throwing fragments (shrapnel), reliability of the initiation system (probability of event), potential for personnel exposure, consequences of unplanned event (incident), potential mitigation measures, and types and quantities of energy inputs. Hazards shall be reduced to an acceptable level of risk as determined by the commanding officer or designee. The acceptance of hazards/risks identified in the MRA shall follow the following hierarchy:

a. Do not accept the risk; that is, do not perform the operation or modify it to remove the risk entirely,

b. Engineer the risk/hazard out of the process; that is, install permanent safety devices (guards, limit switches) that cannot be overridden by operators, increase shield strength, etc.,

c. Set administrative controls in the SOP that permit operations within acceptable approved written guidelines; that is, minimum/maximum temperature limits, quantity of material, etc.

9-4.1. RAW MATERIAL PREPARATION. All ingredients introduced into any ammunition item or explosive should be of known quality and their attributes traceable over their lifetime.

9-4.1.1. All ingredients shall be of known condition and should be inspected and certified before they are introduced into the production process. The type of inspections will vary according to the ingredients, processing equipment, and the required quality of the final product. Foreign material shall be excluded from the process by techniques including, but not limited to, screening, sieving, metal detectors, x-ray, ultrasound, etc.

9-4.1.2. Characteristics of the raw materials shall be determined to account for operations performed on those materials such as screening, grinding, material transfer, etc. Characteristics which could affect safety include, but are not limited to electrostatic discharge (ESD) sensitivity and characteristics; upper and lower explosive limits, friction and impact sensitivity, etc.

9-4.1.3. Separate weigh out bays should be maintained for each ingredient. However, if a bay is used to weigh out multiple ingredients, only one container shall be opened and material weighed at one time.

9-4.1.4. Processes that generate material usable as a recycled feed stream should recycle the material. Prior to introducing the recycled material, evaluate the quality of the recycled material, and its effect on the safety of the process and quality of the end product.

9-4.1.5. Ensure that all materials are stored in suitable containers in accordance with the applicable Technical Manual, 29 CFR 1910.1200, or OPNAVINST 5090.1B (series). Containers shall be marked in accordance with SW020-AC-SAF-010.

9-4.2. SCREENING, BLENDING AND GRINDING OPERATIONS. Screening, blending and grinding equipment shall be constructed to prevent pinching, friction, and impact of explosives. The equipment shall be electrically interconnected and grounded. Screen sizes shall be selected to classify the particle size to the equipment. A permanent type magnetic separator should supplement screening and grinding of all energetic materials. Energetic materials in granular or flake form that are intended for processing should be passed through a screen to remove extraneous material prior to use. Dry explosives in large flake or lump form or wet explosives that cannot be screened shall be inspected in accordance with the procedures and equipment defined in the SOP to prevent the introduction of extraneous material into the process. Examples of inspection processes include x-rays, metal detectors, and visual inspection.

9-4.2.1. Hand-Screening. Hand screening is not recommended because of health, fire, and explosion hazards to personnel. When necessary, the hazards of the hand-screening process shall be evaluated as part of the MRA and hazards reduced to an acceptable level of risk as determined by the commanding officer or designee.

9-4.2.2. Screening Equipment. All power driven screening equipment shall be equipped with dust tight closures for the purpose of reducing the escape of dust from the equipment. Such enclosures shall be designed to prevent sparks due to impact between two spark producing materials. Screening equipment shall be electrically interconnected and grounded.

9-4.2.3. Material Storage. After the screening operation is completed, all material shall be placed in suitable covered containers.

9-4.2.4. Operational Shielding. Operational shields, suitable for the quantity of explosives involved should be provided to protect personnel from screening (except hand screening in accordance with paragraph 9-4.2.1 above) and blending operations. When suitable operational shields are not provided as required, all personnel and controls for the operational equipment shall be located at a minimum of intraline distance from these screening and blending operations. Paragraph 8-4.1.4 describes operational shields and their protection capabilities.

9-4.2.5. Ventilation. Exhaust ventilation must be provided for explosives screening units if operational procedures and equipment design do not preclude the development of concentrations of explosive dusts in excess of the threshold limit values (TB MED 265). Even when exhaust ventilation is not required, screening rooms must be thoroughly cleaned at the end of each shift or more frequently if necessary, to prevent hazardous accumulations of explosives dusts. Generally, wet-type dust collection systems are preferred.

9-4.2.6. Multiple Use of Screens. The same piece of screening equipment shall not be used for two or more materials unless it is definitely established that a mixture of the two will not present an increased hazard. Complete decontamination of screens is difficult.

9-4.2.7. Grinding. Grinding operation requirements are as follows:

a. Grinding equipment shall have all metal parts electrically bonded, and the entire equipment shall be grounded in accordance with the requirements in chapter 5.

b. Material to be reduced in particle size shall be processed over a permanent magnet separator. After grinding, it shall be carefully screened and passed over a permanent magnet separator.

c. In operating ball mills or hammer mills, the operator shall be protected from fire or explosion within the mill by intervening dividing walls or operational shields suitable for the quantity and hazard of the material in the mill.

9-4.3. MIXING OPERATIONS. Mixing operations involve combining energetic materials with energy and/or inert materials to form an explosive, propellant or pyrotechnic composition. Various types of mixing operations include: blending, melt-cast, vertical batch mixing, horizontal batch mixing, and continuous mixing/extruding. Each of these operations has both common and specific hazards associated with their operations. Therefore, the information in this section is general in nature. Specific procedures for each operation shall be developed based on the specific machinery configuration, the energetic materials involved, completion of an MRA, and incorporation of all relevant information into detailed SOPs.

9-4.3.1. General Requirements.

a. Mixing equipment shall be properly installed in buildings sited for the planned operations. Operators will be trained and certified for the mixing operations and instructed on the proper use of PPE.

b. Deluge systems in accordance with paragraph 4-3.9.2 shall be installed wherever exposed powder, explosives, or propellants are processed or stored. Complete protection of such locations is essential. For multiple melt-mix kettles in a single building, the deluge systems for each kettle must be interconnected so that if one actuates, water will flow into all of the kettles.

c. Mixing operations shall be under positive control and be designed to prevent inadvertent operation or tampering by unauthorized personnel. Parameters of the mixing operations should be monitored. Process variables that rely on pressure or temperature for control shall have manual upper limit control mechanisms to prevent over-pressurization or overheating.

d. All mixing operations shall be conducted remotely. Mixing operations shall be monitored by closed circuit television. Remote control rooms shall be designed to allow the operator to manually operate the sprinkler systems and automatically open mixer lids in case of fire.

e. The materials of construction of the mixing equipment shall be compatible with the energetic materials to be processed. The clearances of the mixer blades with the mixer bowl/ housing shall be designed and periodically inspected to prevent blade-to blade/blade-to-bowl contact. For melt-mix kettles designed with less than ¼-inch clearance, the approval processes for major equipment of paragraph 9-3.1 shall be followed.

f. Mixer blades shall be examined for bearing wear and dye-penetrant tested for cracks at predetermined intervals based on equipment design and use. The interval shall be defined in the preventive maintenance manual for that piece of equipment. If testing indicates fatigue or surface cracks, the blade shall be buffed and re-tested. If the cracks are still evident, the blade should be x-rayed to determine the extent of the defect.

g. Based upon the particular mixer design, it may be necessary to include ventilation, exhaust and dust-collecting equipment for personnel protection and reduction of explosive hazards due to dust and vapors. Ventilation systems shall comply with the requirements of paragraph 8-4.2.7. For melt-mix

locations a wet-type collector effective in removing dust and vapors is recommended. The explosives in the collector shall remain wet, and the equipment must function so that any flammable gas generated is promptly removed from the equipment and buildings. Aluminized explosive mixtures shall remain submerged. Water in the collector should not be recirculated, but should be discharged to a drain and sump constructed in accordance with paragraphs 8-4.2.2 and 8-4.3.3.

CAUTION

In melt-mix-pour operations, care should be taken to prevent the creation of “cold air” areas adjacent to the equipment as a result of excessive air intake to the venting system. Explosives can sublime and they shall be prevented from collecting on the machines and overhead structures.

h. Valves for mixing equipment shall be designed to prevent pinching, impact or crushing of explosive materials. Springs shall not be used in valves. Recommendations for valves for melt-mix draw-off pipes and other lines carrying slurry and/or molten explosives should be of a rubber diaphragm type. Teflon-type valves are also acceptable except for aluminized explosives. It is essential to assure that diaphragm-type valves do not have cracked diaphragms, permitting metal-to-metal contact. It is recommended that valves be procured or modified to provide an open bonnet permitting visual inspection. Weep holes will be provided in closed bonnet designs with the weep hole positioned to drain by gravity, giving evidence of a leaking diaphragm. Valves shall be inspected and maintained according to a documented preventive maintenance plan.

i. During filling and casting operations, the draw-off pipe/casting tooling should be electrically connected to the item being filled. Each item being filled should be individually grounded unless tests show that grounding through mutual contact surfaces is adequate.

j. Booster cavity forming tools should be maintained in a polished condition and shall be handled carefully to prevent marring surfaces. For removing forming tools, implements that exert a thrust in the direction of the longitudinal axis of the item involved are recommended rather than those that exert a sideward motion. The forming tool should be rotated on its own axis prior to removal.

k. For melt-mix-pour operations, temperatures used for melting explosives and keeping them molten shall not exceed 228 degrees Fahrenheit (°F) [(109 degrees Centigrade (°C)], corresponding to 5 pounds per square inch (psi) steam pressure, except for the following:

(1) Composition B and similar binary explosives at temperatures of 250°F (121°C), corresponding to 15 psi steam pressure when required by an established procedure; and

(2) TNT core melting equipment at 240°F (116°C), corresponding to 10 psi steam pressure.

l. The steam lines shall be designed, through the use of water legs, rupture disc and/or pressure relief valves to prevent overpressure conditions in the steam lines.

m. During processes that involve gases, vapors, liquids, dusts and other process ingredients contacting, sliding along, or impacting a surface during handling/processing refer to paragraph 3-4 to control hazards due to triboelectric charging.

9-4.4. PRESSING OPERATIONS. Pressing operations shall proceed in accordance with the following provisions:

9-4.4.1. Punches and Die Sets. Punches and dies shall be in matched sets identified by manufacturer's part number or local drawing number. They shall be inspected and approved for use by the gage laboratory or other unit established as capable of performing the necessary measurements. Sets of tools released to production areas are matched for acceptable dimensional and finish characteristics. They need not be the original tools comprising the set. Odd punches of suitable characteristics may be matched by the gage laboratory with a die to form a satisfactory matched set.

a. All punches and dies used in explosive pressing operations shall be subjected to a rigid test like magnaflux or X-ray prior to the startup of a new operation and at least weekly after these tools have been used in pressing operations. Engineering analysis/testing (considering characteristics such as metal strength, loading, frequency of use, etc.) may be used to establish a less frequent inspection time period for those operations that are non-production and/or limited use applications of the punches and dies. Periodic inspection requirements shall be included in the SOP for press operations.

b. Replacement of single components by the operating staff to complete a set of punches and dies is prohibited.

c. The use of polishing pastes or other media containing grit or alkali is prohibited.

d. The selection of cleaning solvents for the punches, dies and presses shall be made based on the characteristics of the materials being pressed, compatibility with the cleaning solvent and documented in the SOP. Examples of typical cleaning solvents for different materials include: acetone for Tetryl, TNT, RDX, HMX; water for black powder and Explosive D; and alcohol for Composition A.

9-4.4.2. Operational Shielding.

a. Each pressing operation involving black powder, tetryl, and other explosives of similar sensitivity, as well as the pressing of explosives in medium and major caliber projectiles (Composition A, PBXNs) shall be conducted in cells having walls of sufficient strength to withstand an explosion of the total quantity of explosives at the operation. Operators shall be protected by the cell walls during these operations. The requirements of paragraph 8-4.3.6.3, specifying interlocking cell doors designed to protect operating personnel, apply.

b. Pressing or reconsolidating of explosives in minor caliber rounds, tracer bodies, detonators, and similar items shall be performed on machines having stations designed to eliminate propagation between stations and provide adequate operator protection. An example would be 1-inch armor plate between two presses. Operators must be behind protective barriers when such operations are conducted.

c. Explosive dusts shall be eliminated between pressing or consolidation stations where operators are protected by operational shields at individual machine stations to preclude propagation between machine stations.

9-4.4.3. Process Operation and Monitoring.

a. The presses shall be interlocked with the press cell doors so that the presses will not operate while the press cell door is open. Once the cell door has closed, the presses shall be programmed to fully press load the projectiles before the cell door is opened again.

b. Cell doors shall be equipped with safety release devices to prevent personnel from being caught by a closing door. However, the safety device shall become inoperative when the cell door is fully closed to prevent overpressure of an explosion from opening the door.

c. The operation of the presses shall be monitored by closed circuit television or mirrors. The camera shall meet requirements for use in hazardous locations as defined in the NEC, NFPA 70.

9-4.4.4. Separate pump units for hydraulic presses, if used, shall not be placed in the press cells.

9-4.5. MACHINING OPERATIONS. Due to the many variables involved, it is impractical to attempt to provide specific guidelines for every conceivable machining operation on energetic materials. Therefore, the regulations governing these operations are general. Regulations concerning machine tools and ancillary equipment are conservative, describing minimum facility capabilities for machining energetic materials.

NOTE

A hazard analysis shall be conducted for each specific machining operation prior to start of the operation in order to provide for specific operating conditions and procedures. These analyses need not be conducted for repeat operations of the same type if there have been no changes in operating conditions or procedures.

The energetic material discussed in the following paragraphs includes explosives, propellants, and pyrotechnics. Contact machining is the machining of energetic material with an operator present and without any type of shield separating the operator and the machining operation. Remote machining gives the operator protection from the machining operation. This operator protection can be accomplished by using shields, blast walls, distance, and barricaded control rooms or buildings. Refer to paragraph 8-4.1.4 for shielding guidelines.

9-4.5.1. General Requirements. Energetic material machining operations shall be in accordance with approved SOPs. They shall be in general compliance with the following provisions:

a. Only certified personnel shall perform energetic material machining operations. They shall be thoroughly briefed by their immediate supervisor prior to the start of any machining operation to ensure their understanding and compliance with the provisions of this chapter.

b. The quantity of energetic materials being machined shall be the minimum necessary for safe and efficient operation. Forming of cavities in energetic materials is preferred over machining. The MRA should also establish the minimum number of personnel required to perform the operation.

c. Pneumatic or hydraulic driven machine tools are preferred for all machining operations on ammunition and explosives. Electric tools may be used if the motors, switches, and wiring are of types suitable for the specific hazardous exposure being produced. Control mechanisms for hydraulic or pneumatic equipment shall provide positive control of speed selected. Pressure relief devices should be installed where necessary.

d. In all machining operations on cased or uncased energetic materials, too adjustments shall be controlled by positive means to ensure proper depth, diameter and contour of the cut. The positive

control measures shall include guides, bushings or other alignment aids to prevent contact between moving parts of the machining equipment and metallic parts of the case or holding fixtures.

e. Sensors are recommended to detect tooling malfunctions or other potentially hazardous abnormalities, particularly for remote controlled operations. Machine tool power consumption monitors, tool force gages, sound or noise detectors, and temperature indicators like thermocouples, thermistors, and infrared sensors can alert the operator to non-standard conditions that require corrective action.

f. Cutting tools shall be chemically compatible with the energetic material to be machined and capable of maintaining sharp cutting edges throughout the machining cycle.

g. Machine tools shall be cleaned as often as necessary during operating hours to prevent the accumulation of energetic material residues, and they shall be thoroughly cleaned before the end of the work shift. Waste products from drilling or machining operations shall be removed at intervals so that the accumulation of hazardous quantities of energetic materials is prevented.

h. Contoured cutting tools like drills, broaches, etc. that produce confining cavities must be completely free from contact with the energetic material being remotely machined before the entry of personnel to the machining area is permitted.

i. The explosive products resulting from drilling and other machining operations shall be removed by an approved type exhaust system or by immersion in a stream of water flowing away from the operation. The waste products should be collected at a point outside the operating room or cubicle. Collected waste products shall be removed from the operating area at intervals sufficiently frequent to prevent hazardous accumulations. The use of large capacity sumps immediately adjacent to the operating room or cubicle should be discouraged.

9-4.5.2. Use of Coolants. The following requirements apply to machining with coolants:

a. Positive automatic interlocking devices shall be provided to ensure that machining cannot be started until the coolant is flowing. These controls shall be capable of stopping the machine if the flow of coolant is interrupted. When it is essential to cut off the flow of coolant to adjust machine tools, positive means shall be devised to ensure that, once adjusted, the flow of coolant is restored and all automatic control devices are in operation before machining is permitted to continue. The manipulation of manual overrides for making the automatic control devices temporarily inoperative shall be under the direct control of an assigned, responsible person other than the operator. Where operations are controlled by operating procedures or process request forms and are used in pilot plant or research operations that require frequent changes, a certified operator may control the automatic control devices on multi-use machines.

b. The coolant material shall be compatible with the energetic materials being machined. For energetic materials containing aluminum, the coolant must be waterless, noncombustible and nontoxic.

c. Coolant flow to the cutter shall be maintained until the cutter is removed from contact with the energetic material.

d. When using compressed air as a coolant, only low pressures of 10 psi or less may be used and then only when an approved vacuum system is implemented to reduce the broadcasting of energetic material particles. The air coolant line shall have a metallic tip or nozzle that is grounded to the machine so that it eliminates any static charges. Pressures exceeding 10 psi can be used for sawing operations as discussed in paragraph 9-4.5.5.

e. The only coolant that is uniformly compatible with pyrotechnic candle machining operations is air. Liquid coolants, especially water, are not normally used due to the porous nature of most pyrotechnic compositions and/or the reactivity or solubility of the candle.

9-4.5.3. Remote Control and Shielded Operations. To protect adjacent operators, energetic material shall be drilled, faced, milled, sawed, or otherwise machined in rooms and cells that have reinforced concrete walls or operational shields in accordance with paragraph 8-4.1.4.

a. Operators shall be provided with a means of viewing operations; for example, television, mirrors, view ports, etc.

b. The remote control station must provide the capability of manually activating an emergency water flush on the energetic material being machined, and capable of starting and stopping all cutting action by the cutting tool on the energetic material and removing the tool from contact with the energetic material.

c. If drilling is being accomplished without the operator being afforded protection, only a single drill shall be used and the drill must have a diameter greater than ¼-inch. Operations involving the use of multiple drills or drills ¼-inch or less in diameter must be performed by remote control. In addition, depths achieved by twist drills shall not impede the flow of chips or coolant to the flutes.

d. Machining of cased energetic material is permitted if the operation requires the tool to remove metal prior to contact with the energetic filler provided the operation is performed by remote control with proper shielding of the operator.

e. Rocket motors shall be machined using remote controls, and the rocket motors shall be thrust-neutral and restrained.

9-4.5.4. Machinery Speed Control. The linear and rotational speeds of tools and the rate of feed used for machining of energetic material shall be maintained at the minimum necessary for safe and efficient operation. Drilling and machining operations on new items/materials shall be done remotely and characterized by tests of conservative design until the proper parameters are determined for the particular composition and configuration. Only then, if deemed safe, may contact machining be considered. It should also be noted that some “machining” operations cannot be defined by speed and feed limits.

a. Machinery equipment should be capable of accurately controlling speed and feed rate.

b. When forming tools cannot be used, “fly-cutter” type tools and forming cutters should be used for producing cavities. When fluted drills must be used, the flutes shall extend from the tip of the drill to a point beyond the entry of the drill into the cased or uncased explosives. High explosives shall not be drilled to a depth greater than 4 inches unless the operation is remotely controlled or the drill is stopped at increments of depth not greater than 4 inches, withdrawn and loose explosives removed from the cavity and drill before continuing. When producing cavities in high explosives with a “fly-cutter” type drill, a flow of air shall be directed at or near the interior bottom of the cavity to aid in clearing explosive chips and dust through the exhaust system.

9-4.5.5. Sawing. For sawing, the following shall apply:

a. Particular attention shall be given during sawing operations to prevent the work from plunging into the saw blade and to ensure that chips are removed from the saw teeth prior to their next cutting pass.

(1) Plunging can occur when thin sections are force-fed into coarse pitch saw blades. To prevent this, either a minimum of two saw teeth must remain in contact with the work while sawing, or the work-feed must be positively controlled.

(2) Chip accumulation in saw teeth is a function of the material being sawed, its rate of feed into the saw blade, blade speed, saw tooth design, and flushing arrangement. Additional chip removal assistance may be achieved by mechanical means like blade wiping brushes, or low-pressure air not to exceed 30 psi.

b. Swarf material like metal and explosive chips should be collected in a wet system. Recycling of coolant may be permitted if the coolant is first filtered through a media of no greater than 50-micron mesh. Pumps using plastic impellers are preferred for recirculation purposes.

9-4.5.6. Hand Cutting and Trimming. Hand trimming and cutting of energetic materials may be permitted, depending upon the results of the hazard analysis for a specific composition and configuration and proposed method of cutting the material. Hazards shall be controlled to an acceptable level, documented in the SOP and approved by the commanding officer or designee.

9-4.6. ASSEMBLY AND TESTING OPERATIONS. Assembly and testing requirements are specific to each ammunition and weapon system and are contained in the appropriate technical manuals and end-item specifications and shall be incorporated into an SOP. Specific hazards of assembly and test shall be identified through the hazard analysis process. The following are general assembly and testing requirements for the production environment.

9-4.6.1. General Requirements. The following requirements generally apply to all assembly operations taking place within the production environment:

a. The floors, tables and workbenches in assembly areas shall meet the requirements of chapter 5 for electrical bonding.

b. Personnel shall be wearing the appropriate PPE and be trained and certified to perform the required operations.

c. Individual assembly operations shall be adequately spaced one from another, to avoid congested conditions and crowding of employees.

d. Benches, tables and workspaces shall be arranged to provide easy escape for the operators in case of an emergency.

e. A regular flow of material shall be maintained during the assembly operations to preclude the build-up of excess materials in any one processing area.

f. Components or assembled items shall not be allowed to accumulate in aisles or in front of exits.

9-4.6.2. Separation Distances. Minimum separation distances between carts or trucks of explosive filled bombs, warheads, etc. being transported between operating buildings shall be separated from each other by unbarricaded intraline distances ($D=18W^{1/3}$). See examples in table 9-2.

9-4.6.3. Electrical Testing. Some weapon systems require electrical testing on components or all-up-rounds to test such parameters as electrical continuity, built-in-test, or weapon functionality. The test method and configuration depend on the size and type of weapon system. This type of testing shall be performed with appropriate operational shielding (paragraph 8-4.1.4) determined by quantity-distance criteria of chapter 7 at a facility site-approved for the operation. The test set shall be an approved test set. In some instances, a weapon program may require and/or desire this type of testing to be conducted in proximity to the weapon. Specific permission for proximity testing shall be requested of the Navy Weapon System Explosives Safety Review Board (WSESRB).

Table 9-2. Minimum Separation Distances for Explosive Filled Bombs, etc., Transported Between Operating Buildings

QUANTITY (lbs)	DISTANCE (ft)
570	150
760	165
1062	185
1140	190
1520	210
1664	215
1780	220
1890	225
2220	235
2735	255

NOTE: Distance is based on formula $D=18W^{1/3}$

9-4.6.4. Waste Material Removal. Paragraph 4-1.7.5 provides direction concerning the removal of combustible and explosive waste from operating buildings at the end of a workday. Explosive waste is generated when a determination is made by the generator to discard scrap material, without intent to reuse, recycle, recover or sell it. Explosives waste is by definition a hazardous waste and must be stored in a location that is designated and managed as a hazardous waste accumulation site. Explosive hazardous waste may also exhibit other hazardous waste characteristics, such as toxicity or flammability, especially if solvents are present. Guidance for storage by hazardous waste generators is given in OPNAVINST 5090.1 (series).

9-4.7. MAINTENANCE, RENOVATION AND DEMILITARIZATION. SOPs shall be prepared for all maintenance, renovation and/or demilitarization operations as specified in paragraph 2-1.1. Development of the SOPs will include the conduct of a MRA on the operations to identify and reduce hazards to an acceptable level. Maintenance, renovation and demilitarization shall be performed in a building or area site approved for the intended operation. These operations shall not be performed in magazines or on conveyances unless specifically authorized by Naval Ordnance Safety and Security

Activity (NOSSA). Limited ammunition or container maintenance is permitted by paragraph 11-3.1.1. However, this type of operation should be accomplished in a building or area correctly sited for the purpose. In clear weather, minor maintenance and renovation may be done in the open at a distance sufficient to comply with intraline Q-D requirements, but at least 100 feet from any building or conveyance containing ammunition or explosives.

9-4.7.1. Renovation. Maintenance and renovation of explosives and weapons shall only be performed at stations with suitable, correctly sited facilities. At facilities not appropriately sited and authorized, maintenance shall be limited to overhaul or repair of damaged or deteriorated containers, repackaging of materials in damaged or otherwise unserviceable containers or adjustment of container covers.

a. Repairing and Repackaging Containers. All containers that are leaking shall be repaired. If repair is not possible, the contents shall be transferred to serviceable, airtight containers. Repackaging contents of containers shall be in accordance with paragraph 9-4.7. Leaks due to defective covers and gaskets may be repaired without removing the contents of containers, but leaks in other parts of the container require contents to be removed prior to repair.

(1) Empty, damaged containers shall not be repaired until precautions have been taken so that any explosive contamination such as loose powders and powder dust has been removed. If containers can not be repaired, they shall be sent for disposal in accordance with approved procedures.

(2) Container covers in storage should be checked for tightness. Slack caused by gaskets setting shall be eliminated with approved wrenches. Care should be taken to prevent cutting the top gaskets by avoiding the application of excessive force.

(3) Approved PPE and safety tools shall be used when opening and closing containers.

b. Repainting Containers and Weapons. Metal containers and weapons (gun ammunition and bombs) that rust shall be renovated whenever necessary to control deterioration. When a container or ammunition item is repainted, the marking on each item shall be reapplied completely.

9-4.7.2. Demilitarization. Each energetic material and its associated weapon shall have an approved demilitarization procedure compatible with that particular system. Some types of demilitarization systems consist of washout or steamout of the energetic material from the weapon cases. Other weapons are cartridge loaded and the explosive material can be easily downloaded and sent for reuse/recycle/disposal. Each weapon will have procedures documented in a SOP after addressing the hazards of demilitarization as part of the MRA and evaluating the procedure for compliance with all Environmental Protection Agency (EPA), state and local environmental laws and regulations.

a. The equipment shall be installed in rooms or buildings correctly sited for the purpose in accordance with chapter 7 and paragraph 8-1.2 of this manual. The equipment and processes shall have been analyzed, documented and approved in accordance with paragraph 9-3.1.

b. Explosives recovered from demilitarization operations shall be categorized for one or more of the following dispositions:

(1) Destruction. For this category it shall be necessary that the demilitarization procedure generate material that can be safely handled and transported to a disposal site in accordance with all applicable transportation safety and environmental regulations.

(2) Commercial Sale or Later Reclamation. Bulk packaged material shall be sampled and certified to determine material safety and condition. Sufficient documentation shall be prepared to identify the material explosive class, and safe handling, packaging, and storage characteristics to ensure that any later transportation complies with applicable laws.

(3) Reclamation for Reloading. All reclaimed or reconstituted energetic materials shall be sampled and certified that relevant military standards or other specifications have been met.

c. Potential hazards of demilitarized energetic materials should be recognized. For example, moisture reactions with aluminized explosives require that they be packaged in vented containers while awaiting disposal.

9-5. ENERGETIC MATERIALS/AMMUNITION ITEMS IN THE PRODUCTION/PROCESSING/ MAINTENANCE/RENOVATION ENVIRONMENT.

This section describes material characteristics and production processes that have been performed on certain classes of ammunition items in the past. This information provides historical background information on how explosives and ammunition have been handled. The general requirements of this chapter pertaining to the production, processing, maintenance and renovation of all classes of ammunition and explosives apply. Each ammunition item and process shall have the benefit of a MRA. Processes and equipment use shall be documented in an approved SOP.

9-5.1. BLACK POWDER. General requirements applicable to black powder production buildings are as follows:

9-5.1.1. Black powder operations shall be undertaken only in buildings or compartments having non-sparking conductive floors free of abrasions, cracks, or crevices. If these conditions are temporarily impossible to achieve, the floors shall be covered with fire-retardant tarpaulins of canvas, cotton, or other suitable fabric. Fire protection systems (deluge) shall be installed to prevent the spread of fire during operations.

9-5.1.2. Black powder production buildings shall be cleaned thoroughly and completely after each working day. Fresh water should be used for the cleaning operations.

9-5.1.3. Equipment like scoops, scales, and tools used in black powder operations shall be electrically grounded while in use. Tables or other work surfaces shall be constructed of nonsparking material.

9-5.1.4. Production buildings where black powder is exposed and handled shall be provided with spark-resistant, static-grounding plates on the floor at the threshold of all doors, on the steps to the powder bin hopper, and adjacent to each sewing room scuttle. These plates shall be of adequate size and located so that a person passing through the doors or engaged in collecting components will walk on them and dissipate any accumulated static electricity. Static-grounded “grab” rods shall be installed immediately outside and adjacent to doors other than exit doors. Personnel entering the building shall be required to touch or clasp the rods for at least 3 seconds.

9-5.1.5. Black powder operations shall be laid out so that frequent grounding of personnel will occur.

9-5.1.6. The amount of black powder in any one container, regardless of the size or character of the container, shall not exceed 25 pounds. Whenever it is necessary to handle loose black powder, not more than 25 pounds of powder in open or closed containers shall be permitted at or near such

operations. These containers shall be well separated from other containers preferably by intervening bulkheads or walls.

9-5.1.7. The quantity of black powder on hand at each stage or location of operations shall be the absolute minimum amount compatible with immediate requirements.

9-5.1.8. Loaded components shall not accumulate in operating buildings where exposed black powder is present. They shall be frequently removed from the buildings and placed in storage even though it is necessary to stop operations temporarily in order to avoid accumulations. Black powder filled ignition ends and other charges shall be removed from operating buildings and properly stored in an appropriate black powder magazine at the close of each day or working period.

9-5.1.9. No more than 100 pounds of black powder shall be permitted in the repackaging room at one time. Only approved safety tools shall be used for opening or closing containers of bulk black powder and in all other operations involving exposed black powder.

9-5.1.10. Black Powder Igniters. Requirements for filling igniters are as follows:

a. The amount of black powder permitted within an igniter filling building at any one time shall not exceed 50 pounds. Of this amount, a maximum of 25 pounds may be in the powder bin hopper, and a maximum of 25 pounds may be present in the packing room, and in corridors of the building.

b. Not more than one operator shall be present at any one time in an igniter filling building when operations are in progress.

c. Not more than one operator shall be present at any one time in the powder bin of the igniter filling building when there is black powder in the hopper of the bin.

9-5.1.11. Damaged Containers. Damaged bulk black powder containers shall not be repaired or reused. The black powder shall be emptied and examined for signs of decomposition like white spots on the surface of the grains or high moisture content. If the powder is damp, caked, or has white spots on it, the black powder shall be disposed of in accordance with instructions contained in this manual. If the powder is serviceable, it shall be repackaged in new or serviceable containers properly marked to indicate their contents.

9-5.1.12. Immediately after emptying, black powder containers shall be filled with water and washed free of powder. Empty containers, if serviceable, may be reused. They may be transported empty provided they have been carefully cleaned and inspected to determine they are free of black powder. If the empty containers are not to be reused, they shall be thoroughly cleaned prior to disposal.

9-5.2. SMOKELESS POWDER. Smokeless powder shall not be exposed to a damp atmosphere or to direct sunlight. If repackaging of smokeless powder is necessary due to damaged or otherwise unserviceable containers, the marking from the old container shall be reapplied completely onto the new container unless it is specified that the latest Department of Transportation (DOT) markings are to be used. Empty, damaged containers shall not be repaired until precautions have been taken to ensure that all loose grains of powder and powder dust have been removed.

9-5.3. BULK EXPLOSIVES. There are no special production or maintenance issues with bulk explosives that have not been addressed in the rest of this chapter.

9-5.4. GUN PROPELLANT CHARGES. Gun propellant charges include both separated and separate loading ammunition charges.

9-5.4.1. The maximum supply of bulk smokeless powder in the powder loft shall not exceed 6,000 pounds or the amount required to maintain ½-hour of production, whichever amount is less.

9-5.4.2. Personnel pouring or screening smokeless powder shall stand on static grounding plates. Personnel gaging the height of propellant charges or inserting wads shall be grounded during the operation.

9-5.4.3. Smokeless powder boxes shall be properly grounded while powder is being poured to or from them. In addition, powder scoops, funnels, scales, and cartridge cases shall be properly grounded when pouring smokeless powder.

9-5.4.4. Smokeless powder shall not be exposed to a damp atmosphere or to direct sunlight.

9-5.5. GUN AMMUNITION. The requirements established in this chapter for the production, processing and maintenance of ammunition and explosives in general should be followed for projectiles and fixed ammunition. Specific requirements applicable to gun ammunition follow.

9-5.5.1. Projectile Loading. Not more than one projectile for each operation being performed shall be present in a cell of a projectile loading building. No more than one operator shall be present in a drilling, thread cleaning, or fuzing cell for each operation being performed.

a. Pressing Operations. Also see paragraph 9-4.4 for general explosives pressing requirements.

(1) For medium caliber projectiles, two presses may be installed in each press cell when 1-inch of armor plate is placed and securely fastened between the two presses. The presses shall be approved in accordance with the requirements for electrical equipment outlined in paragraph 5-10.4.

(2) For major caliber projectiles, the press room shall have four cells. One press of approved electrical design as required by paragraph 5-10.4 shall be installed in each press cell.

(3) For all projectile pressing operations, the presses shall be interlocked with the press cell doors as required by paragraph 9-4.4.3.

(4) The weighing booths shall be equipped with individual exhaust systems compatible with the materials being weighed. The exhaust systems may be connected to a single wet- or dry-type collector located outside the building. For Composition A-3, weighing booths shall not be connected to exhausts.

b. Drilling Operations. For a general discussion of explosives machining requirements, see paragraph 9-4.5.

(1) Cells connected by scuttles shall have 1-inch armor plate doors on each side, and the doors shall be interlocked so that only one door can open at a time.

(2) The door to the drill cell shall be interlocked with the drilling machine, so that the machine will not operate when the cell door is open.

(3) The facing and drilling machinery shall be capable of operating by remote control or with an operator present. The machine shall be equipped with a vacuum pickup to remove loose explosives from the machinery. It shall be approved in accordance with paragraph 5-10.4.

(4) The drilling and fuzing cells/rooms shall be equipped to with all necessary equipment to complete fuze operations including: facing charges, drilling fuze cavities, installing base plugs, installing fuzes and auxiliary detonating fuzes, etc.

(5) The wrenches for fuzes shall not be air operated and shall not be reversible.

(6) A gas check hydraulic press with dual hand controls that has been approved in accordance with the electrical requirements of paragraph 5-10.4 shall be installed in the work area of the drill room.

c. Defuzing Operations during Production. At least one defuzing machine shall be installed for defuzing rejected projectiles. The machine shall be operated by remote control, shall be interlocked with the cell door so that the defuzer will not operate with the door open, and shall have been approved in accordance with paragraph 5-10.4.

9-5.5.2. Thread Cleaning. Projectile loading techniques should preclude the deposition of explosives in threaded openings in the projectiles. When thread cleaning is necessary, it should be accomplished by the judicious use of nonferrous “picks.” Stainless steel brushes may be used to clean threads of explosive loaded projectiles provided a fuze seat liner separates the thread cleaning operation from the explosive charge. The operator and adjacent operators need not be protected by means of operational shields; however, thread cleaning operations should be separated from unrelated operations.

9-5.5.3. Application of Rust Preventive. Unpainted projectiles, rotating bands, and fuzes or tracers of painted projectiles shall always be kept coated with an approved rust preventive to prevent rust or corrosion. Before reconditioning their exterior surfaces, projectiles should be thoroughly cleaned. Metal rust preventive or paint does not stop rusting unless all rust has been removed before the preventive or paint is applied.

9-5.5.4. Grit Blast Cleaning of Projectiles. The defuzing of projectiles for grit blast cleaning is not required if the following provisions are followed:

a. Projectiles with nose fuzes shall have the nose fuzes protected by waterproof protecting caps during grit blast cleaning.

b. Projectiles with exposed tracer elements shall have the tracer elements covered with plastic electrical tape or the equivalent during grit blast cleaning.

c. If the portion of the projectile beneath the waterproof protecting cap is to be cleaned, the nose fuze shall be removed, and a shipping plug installed in the nose fuze cavity prior to grit blast cleaning.

9-5.5.5. Propellant Screening. Propellant recovered from cartridge breakdown shall be screened on screening tables that are similar in design to those installed in powder lofts. Propellant screening tables should be constructed of 100% nonferrous metal, but may be constructed with wood frames and covered with nonferrous sheet metal. The screens should be constructed of brass, and should have mesh fine enough so that the propellant grains cannot fall through. The propellant screening Table shall be grounded, and provisions shall be made for grounding the cartridge case to the Table before the propellant is poured. Provisions shall also be made for grounding the propellant box to the Table before filling the box with propellant.

9-5.5.6. Depriming Machines. Depriming machines shall be installed in the priming rooms of cartridge assembly buildings. The priming machines for screw-type primers can be reversed for depriming cartridge cases that have screw primers. Depriming machines for push-type primers may be designed to push the head of the primer through the cartridge case, shearing the lip from the head of the primer, or to push the primer out from inside of the case. For demilitarizing, the depriming machines for push-type primers may be designed to fire the primer as it is pushed out. Machines of this design shall be vented to the outside of buildings. All depriming machines shall be designed with flash shields to protect the operators in case the primer is activated.

9-5.5.7. Defuzing. Operations during Maintenance and Renovation. The methods used in defuzing projectiles and warheads will vary, depending on the type of rounds, how they are assembled, and the type of load they are carrying. The term “projectile,” as used in this paragraph includes both projectiles and warheads. Projectile defuzing regulations are as follows:

a. Projectiles without Fuze Cavity Liners. The removal of fuzes from projectiles that results in the exposure of explosives shall be performed by remote control with the operator protected by an operational shield meeting the requirements of paragraph 8-4.1.4. Examples include 3"/50 VT/IR nose fuze and 16"/50 base fuze ammunition. The defuzing machine shall be designed in such a manner that the fuze will be completely withdrawn from the projectile. The maximum torque to be applied to a base fuze is 2,500 foot-pounds (ft-lb), and the maximum fuze withdrawal pressure shall not exceed 500 pounds. Both pressures may be applied simultaneously for short periods of time. The projectile shall be removed from the defusing machine first. However, if the process used makes it desirable to remove the fuze first, a ¼-inch aluminum plate shall be placed over the fuze cavity of the projectile while the fuze is being removed.

b. Army-Type Projectiles. The removal of fuzes from Army-type projectiles that are designed for field changing of fuzes does not require remote control removal.

c. Illuminating Projectiles. The removal of fuzes from illuminating projectiles does not require remote control or operator shielding. The operation may be performed on the line. However, when the fuze component that is being removed exposes the expelling charge bag, a double metal container, NAPEC Drawing 1336, with sand in the outer container and water in the inner container, shall be placed under the projectile, and the illuminating projectile shall be secured in a vise, NAPEC Drawing 1271 or equal. The purpose of the container is to extinguish the burning candle in case of accidental ejection of the illuminating load.

d. White Phosphorus (WP) Projectiles. The removal of fuzes from white phosphorus projectiles requires removal by remote control when the fuze component that is being removed exposes the expelling charge bag. Water shall be available to immediately flood the projectile or immerse the projectile in case of a leaker. Flooding shall be done by remote control. In addition, the following requirements shall be observed:

(1) After a nose fuze is removed from a white phosphorus projectile, care shall be exercised to ensure that the expelling charge bag does not engage the threads of the projectile.

(2) When the shipping plug or nose fuze cup (or the fuze-well from an Army-type projectile) has been removed from a white phosphorus projectile, a 10- to 20-second waiting period must elapse before further operations may be performed on the projectile. During this period, the projectile shall be observed for the presence of smoke that would indicate leaking in the canister of the projectile. If smoke is observed, the projectile shall be flooded by remote control, or it shall be immediately immersed in a water-filled container.

(3) If the expelling charge is removed from white phosphorus projectiles, the expelling charges shall be placed in containers made of spark-resistant metal and equipped with covers.

(4) A hand-operated spanner wrench, with a handle that is not longer than 12 inches, shall be used to remove the burster tube from the projectile.

(5) If the burster tube cannot be removed easily by using hand pressure only, the projectile shall be plugged, stenciled to indicate its condition, and transferred to an authorized storage site to await disposition.

(6) When the burster tube has been removed from a white phosphorus projectile, the interior of the projectile shall be observed for 10 to 20 seconds for the presence of smoke. If smoke is observed, the projectile shall be immersed immediately in a water-filled container.

(7) The base plug and base pad shall be removed from each white phosphorus projectile by applying sufficient force on the nose end of the white phosphorus canister to break the shear pin between the projectile and the base plug.

(8) The canister shall be removed from each white phosphorus projectile by using hand pressure only. The exterior as well as the burster-tube well of each canister shall be inspected for corrosion or signs of rupture. Unserviceable canisters shall be transferred to an authorized storage site to await disposition. Leaky canisters shall be immersed in a water-filled container. Each serviceable canister shall be cleaned, placed in storage containers, and transferred to an authorized storage site. If necessary, the threads in the burster-tube well may be cleaned with a small brush and alcohol.

e. Projectiles with Fuze Cavity Liners. Defuzing of gun ammunition with cavity liners may be accomplished non-remotely. The operation may be performed on the line provided that:

(1) Positive information is available ensuring that cavity liners are installed before performing any non-remote defuzing operations.

(2) Visual examination of the gun ammunition reveals no abnormal condition like mutilation, exudate, or extreme amounts of rust resulting from unusual storage or handling.

f. Base Fuze Hole Plugs. The removal of base fuze hole plugs shall be performed in accordance with paragraph 9-5.5.7.a.

g. Cavity Liner Removal. The removal of cavity liners from projectiles does not require the use of remote controls or operator shielding. The operator shall be sure all threads are free from explosive dust before removing the cavity liner. Cavity liners shall not be removed from projectiles if abnormal conditions exist, as described in paragraph 9-5.5.7.e(2).

h. Base Ejection Projectiles. The vise-table used in defuzing base ejection-type projectiles shall be designed so that the projectile contents will be ejected into water, in case of accidental functioning of the projectile, and so that the operator can dump the entire projectile in water in case of emergency.

9-5.5.8. 40 mm Gun Cartridge Packing/Unpacking. When packing or unpacking 40 mm gun cartridges, wood primer shields or shields of other suitable nonmetallic material shall be placed over the exposed clips of cartridges in the container before inserting or removing a clip of cartridges.

9-5.6. SMALL-ARMS AMMUNITION. The principal maintenance for small-arms ammunition consists of repairing damaged containers and repackaging the containers. Ammunition in the damaged containers shall be inspected for visible defects and for serviceability. Ammunition lots that contain an excessive number of visible defects shall be sorted in order to reclaim ammunition that is still satisfactory for issue.

9-5.6.1. Reclamation of Lots. The sorting of lots of ammunition that cannot be issued because they contain an excessive number of visible defects, or the reclaiming and repackaging of the serviceable ammunition in the lots shall not be undertaken except upon specific instructions from the ammunition program manager.

9-5.7. BOMB-TYPE AMMUNITION. The production and maintenance of bomb-type ammunition including mines and missiles, rocket and torpedo warheads has been covered in this chapter. Specific requirements applicable to those types of ammunition are detailed here.

9-5.7.1. Cleaning and Application of Preservatives. The exterior surface of bombs shall be cleaned using approved methods and tools. Fuze threads and cavity liners should be cleaned with non-metallic brushes or alcohol. Cleaned and dry threads of fuze cavities, shipping plugs, base plugs and any other thread should be coated with a thin film of preservative grease. An excessive amount of grease should be avoided. Preservatives shall only be applied to fuze cavities of bombs with cavity liners. All accessories shall be reinstalled after the preservative has been applied.

9-5.7.2. Removal of TNT Exudate. TNT exudate, if present, shall be removed from the outer surfaces of bomb-type ammunition and from magazine floors. It is soluble in acetone or alcohol. With proper ventilation, either of these solvents can be used to remove and dispose of exudate. Clean hot water may also be used. Exudate shall not be removed using tools or instruments that could cause sparks or heat.

CAUTION

Under no circumstances shall soap or other alkaline preparations be used to remove TNT exudate because the addition of a small amount of hydroxide, caustic soda, or potash will sensitize TNT and cause it to explode if heated to 160° F.

9-5.7.3. Fuze Cavity Threads. Additional protection for fuze cavity threads may be provided particularly in wet or high-humidity climates by applying gun-slushing compound. If the bomb has a rubber or fiber gasket, the gasket shall be dipped in warm gun-slushing compound prior to assembly, and if no gasket is present, the shipping plug shall be assembled and brushed with warm gun-slushing compound to seal the seat of the shipping plug on the bomb.

9-5.7.4. Use of Power Tools on Underwater Mines. The use of power tools on explosive loaded underwater mines is permitted when the following precautions are observed:

a. Air operated power wrenches are authorized for installation/removal of fasteners on underwater mines with or without EEDs installed, provided the fasteners do not secure explosive openings. For example, power wrenches shall not be used on the nuts on explosive, filling hole covers.

b. Electric power tools are authorized for installation and/or removal of fasteners on underwater mines without EEDs installed, provided the mines are grounded.

c. Removal of paint and rust on thin wall cases is authorized on underwater mines without EEDs installed. Air or electric power tools can be used provided they do not exceed 2,000 revolutions per minute (rpm) and use nonferrous wire (rotary) or abrasive cloth wheels that do not exceed 8 inches. Abrasive cloth pads that are not over 4 by 8 inches in diameter can be used with reciprocating tools. During the removal process there shall be constant movement to prevent localized heat buildup.

d. Removal of paint and rust on underwater mines with EEDs installed is authorized in accordance with the above criteria, except that the work may be done with air tools only. The use of electric power tools on underwater mines with EEDs installed is prohibited.

9-5.8. ROCKETS. The requirements established in this chapter for the production and processing of ammunition and explosives in general shall be followed in the production and processing of rockets and rocket components including JATO units. Instructions regarding assembly of guided missiles and guided missile components are found in specific publications covering specific guided missiles.

9-5.8.1. Rocket Motor Assembly Operations. The following requirements apply to rocket motor assembly operations:

a. Inhibiting. When inhibiting operations must be performed, they shall be performed in ventilated booths. The airflow from the booth shall be great enough to remove all fumes from the propellant grain and from the inhibiting solvent. Fixtures shall be installed in the booths to hold the propellant grain that is being inhibited. Pans large enough to hold the inhibiting solvent and the inhibitors shall also be installed. The operator performing the inhibiting shall wear rubber gloves.

b. Handling Igniters. Igniters shall be shunted at all times except during the actual hookup in the rocket motor. The rocket motor shall then be shunted. Certain motors do not require a shunt because of their basic design.

c. Rocket Motor Assembly. Rocket motor assembly shall be performed in cells. The rocket motor assembly may be performed on an indexing conveyor. The assembly line conveyor for propulsive motors shall be equipped with the tiedowns capable of withstanding the thrust of the motors being assembled. A regular flow of propellant grains shall be maintained, and excessive buildup of propellant at any one station shall not be allowed. Intermediate storage rooms are required for propellant grains awaiting transfer to the assembly rooms. All conveyor openings in the propellant rooms shall be equipped with fire doors. Personnel handling propellant grains shall wear gloves that provide protection from skin absorption of toxic chemicals.

d. Continuity Testing. All rocket motors electrical circuits shall be continuity-tested upon completion of assembly or at other intermediate points as required by system requirements. Hazards of continuity testing shall be addressed as part of the MRA and documented in the SOP. The method and test stand configuration depends on the size and type of the rocket motors. Rocket motors that would be propulsive if ignited during a test shall be adequately tied down during testing. Continuity tests shall be performed behind operational shields of adequate design to protect the operators. The instrument used must be an approved igniter circuit continuity tester, which limits the current and provides a means for determining definitely whether or not the electrical circuit in the rocket motor is defective. The test current shall not be sufficient to fire a rocket motor that is undergoing tests. In general, the test current shall not exceed 10% of the maximum no-fire current of the EED. Shunts must be removed for testing, but the rocket motors shall be re-shunted prior to removing them from the test location. The following general safety precautions shall be exercised when using the tester:

(1) Rocket igniter circuits may be checked while the motor is in the propulsive state provided testing is done in approved isolated cells, the motor is restrained against its full thrust, and the test is performed in accordance with an approved SOP.

(2) Rockets shall be continuity-tested only in site-approved rocket assembly or test buildings that provide suitable barricaded or isolated cells from which personnel shall be excluded during periods when the rocket circuit is energized.

(3) Field testing at locations where a suitable building is not available is authorized provided the test location and the design of the temporary barricade are site-approved.

When the electric circuit of a rocket motor does not meet the specified resistance requirements, the rocket motor should not be used. Rocket motors failing test shall be moved to a breakdown location immediately.

e. Thread Protectors. Plastic thread protectors should be installed in the mating threads of rocket motors. However, if the rocket motor is susceptible to the hazards of electromagnetic radiation, metal thread protectors shall be installed. Refer to NAVSEA OP 3565.

9-5.9. FUZES. There shall be no reworking, reconditioning, overhauling, or modifying of any fuzes except by specific direction of the program manager.

9-5.10. PYROTECHNIC MATERIALS. Pyrotechnic materials are, in general, very sensitive to heat, flame, static electricity, and friction. Therefore, they shall be handled with extreme caution at all times. In addition to the requirements established in this chapter for the production, processing and maintenance of ammunition and explosive items, the following safety requirements for processing and handling pyrotechnic materials shall be observed.

9-5.10.1. Weighing. The requirements for weighing of raw pyrotechnic materials are as follows:

a. Weighing of pyrotechnic components which are generally explosives, other highly combustible materials and metallic powders, shall be performed on scales that are electrically grounded in accordance with paragraph 5-7.1.

b. There shall be two separate weighing or measuring rooms, one for the oxidizing agents and one for the combustible materials and metallic powders. It is important that containers, sieves, and other equipment intended for use with oxidizing agents are not used for combustible materials and metallic powders, and vice versa, because complete cleaning of the equipment is not always possible.

9-5.10.2. Drying. If coated magnesium powder is included in the pyrotechnic composition, the humidity during the processing should be between 50% and 55%. The room temperature shall not exceed 80 ºF. Adequate ventilation shall be provided in rooms where the processing is being done.

9-5.10.3. Mixing and Blending. Mixing and blending requirements are as follows:

a. Blending operations should be conducted preferably in a building designed and used solely for this purpose. Multiple blending operations in connection with pyrotechnic mixtures may be conducted in the same building provided each blender or mixer is located in a separate room or cell separated from each other by a substantial dividing wall acceptable for the quantity and hazard of material involved. At least one wall or an equivalent panel area in more than one wall shall be breakable. These cells should be arranged so that personnel are prevented from passing in front of the weak wall

or panel area while the blender within the cell is in operation. The building shall meet the requirements of paragraph 8-4.1.4.

b. Strong oxidizing agents, like peroxides, chlorates, and perchlorates shall be desensitized with oil and other similar material prior to blending with combustible materials, when desensitizing materials are specified in the mixing formula. When oxidizing agents are blended with fuels, the operation shall be performed in a mechanical blender operated and installed in accordance with the requirements of this paragraph.

c. Blending and mixing machines with rotating blades, except mixers that use the mulling principle, shall not be used for mixing hazardous materials. Blenders equipped with metal baffles shall have the baffles securely welded into position.

d. Blenders shall be operated by shafts extending through the building wall and connected to a motor located outside the blending bay.

e. Covered blenders shall be provided with a safety seal or other suitable means for relieving any excessive gaseous pressure that has developed within them.

f. The maximum quantities of composition per charge recommended for the safe operation of mixers and blenders shall be an amount that will minimize the exposure to employees during continuous operations.

g. Operating rules shall be strictly enforced. These rules provide for:

(1) The use of remote control, interlocked with the mixing room door;

(2) “Dead man” handle or continuous pressure buttons, as the preferred controls;

(3) The remote control loading and unloading of blenders or mixers;

(4) The prohibition of operators from danger areas when mixers or blenders are in operation or are being loaded or unloaded;

(5) And the marking of dangerous areas by conspicuous posters, mechanical indicators, or warning lights when blenders or mixers are being loaded or unloaded or are in operation.

h. When magnesium powder is used as a constituent of flare, signal, or tracer compositions, it is normally pre-coated with polyester resin, linseed oil, or paraffin to insulate the magnesium against moisture and against the chemicals that may be pressed against it.

i. If volatile materials are used as solvents for the coating materials, provisions shall be made to remove the fumes and vapors by means of approved ventilation to meet established Navy Occupational Safety and Health (NAVOSH) criteria for the solvent in use. Exhaust ventilation systems should be installed so they take advantage of the subsequent natural tendency of the vapors to seek a level lower than air.

9-5.10.4. Machining. Machining equipment should be capable of accurately controlling speed and feed rates. Drilling and machining operations on new items or compositions shall be done remotely and characterized by tests of conservative design until proper parameters are determined for the particular composition and configuration. Only then, if deemed safe may contact machining be considered.

Based on past experience, the following machine speeds/feed rates for the specified type of compositions should not be exceeded and can be considered when trying to determine starting parameters for new compositions.

a. 450 rpm for colored smoke compositions containing organic dyes, potassium chlorate, and sugars or extruded pyrotechnics containing magnesium, and tetrafluoroethylene polymers, and tetrafluoropropylene polymers,

b. 200 rpm for red phosphorous compositions.

9-5.10.5. Protective Equipment. Protective equipment, including flameproof blankets, shall be available in easily accessible places. Emergency or safety showers shall be located as described in paragraph 8-4.2.4.

9-5.10.6. General Maintenance. No type of maintenance shall be attempted on pyrotechnic items. Approved maintenance is limited to repairing damaged or otherwise unserviceable containers and repackaging the contents.

9-5.10.7. Pyrotechnics Exposed to Moisture. If pyrotechnics are exposed to moisture, they should be segregated from all other material and examined to make sure that they are serviceable and not dangerous. This is particularly important for water-activated pyrotechnics, which may be extremely hazardous when exposed to moisture. Containers that show signs of dampness or moisture shall be opened. If there is any evidence of moisture on the pyrotechnics, a report shall be made to the program manager requesting disposition of the material.

9-5.10.8. Demolition and Miscellaneous Explosives and Ammunition. The requirements established in this chapter for the production, processing and maintenance of ammunition and explosives apply to demolition and miscellaneous explosives and ammunition items. Specific requirements for this class of ammunition shall be followed.

9-5.10.9. Frozen Commercial Dynamite. Modern commercial dynamite does not freeze even at temperatures of -20 or -40° F except under conditions of abnormal exposures such as long exposure out-of-doors in unprotected, high winds. Since it may freeze under abnormal conditions, all commercial dynamite should be protected from extremely low temperatures as much as possible. Frozen commercial dynamite is very hard, and if two cartridges are lightly tapped together, they will give forth a metallic sound. This test for frozen commercial dynamite is not infallible, since “set” commercial dynamite, ammonium nitrate dynamite that has absorbed moisture and solidified, may react the same way. However, it normally will be possible to tell the two apart on the basis of storage conditions and the history of the commercial dynamite. Frozen commercial dynamite and “set” commercial dynamite shall not be used. They are somewhat more sensitive to shock and friction than normal commercial dynamite. In addition, they may fail to detonate or only partially detonate, creating excessive fumes, if attempts are made to use them.

9-5.10.10. Thawing of Frozen Commercial Dynamite. Frozen commercial dynamite shall not be thawed except under the supervision of experienced personnel in accordance with special instructions. It is appreciably more sensitive during and after being thawed than before freezing. Consequently, if specialized personnel are unavailable or safe facilities cannot be obtained, small amounts of frozen commercial dynamite shall be disposed of in accordance with instructions for unsafe, deteriorated, commercial dynamite.

THIS PAGE INTENTIONALLY BLANK

CHAPTER 10
HANDLING

10-1. INTRODUCTION.

This chapter presents the minimum requirements for safe handling of ammunition and explosives. It also contains general safety precautions and requirements for approved handling equipment, organized into the following categories: materials handling equipment (MHE) and weight handling equipment (WHE) in conjunction with ordnance handling equipment (OHE), and armament weapons support equipment (AWSE). Precautions for safely handling specific types of ammunition, explosives and ordnance are also incorporated into this chapter.

10-1.1. GENERAL HANDLING REGULATIONS.

10-1.1.1. Ammunition and explosives shall be handled in a manner so as to prevent shock or friction that may cause a fire, or explosion or damage to the material. These materials shall not be thrown, dropped, dragged, or tumbled over floors or over other containers. There may be occasions when larger items are transported in van-type vehicles or railcars, preventing direct handling by forklifts. In such circumstances, it may be necessary to move one or more items by skidding or pulling the item(s) out of the conveyance. This practice should only be used when no other practical means for moving the items are available. In such cases, spotters must maintain a clear view of the entire movement from a safe location. Rollers and pallet trucks should be used whenever possible during removal operations.

10-1.1.2. Handling of ammunition and explosives shall be reduced to a minimum in order to prevent damage and the creation of hazardous conditions. Precaution shall be taken to avoid the contact of ammunition and explosives with sand, earth, gravel, and other abrasive or spark producing substances and to avoid unnecessary exposure to inclement weather or to direct sunlight.

10-1.1.3. Hazard Class/Division (HC/D) 1.1 items shall not be handled with chemical ammunition that contains incendiary charges or white phosphorus.

10-1.1.4. Containers of bulk ammunition and explosives shall be handled carefully to avoid rupture of the containers or the container seams and to prevent undue friction between the containers. If any container is found in an unsatisfactory condition, after inspection by EOD or other qualified personnel, its contents shall be transferred to a proper container that is in material condition Code A in accordance with NAVSUP P-724, and the containers shall be properly relabeled.

10-1.1.5. Ammunition and explosives shall be handled in a manner so as to avoid obliterating or defacing the identification markings.

10-1.1.6. Hooks shall be moused or equipped with safety latches to prevent accidental unhooking. Bale hooks or similar devices shall never be used on ammunition and explosives or their containers.

10-1.1.7. Care shall be taken with containers carrying finely granulated explosives, to prevent leakage of the contents during handling.

10-1.1.8. Packing boxes with sift-proof or waterproof liners shall be handled in a manner so as to prevent the liners from splitting.

10-1.1.9. Chutes may be used for moving comparatively small or light containers that may be handled readily by hand, provided that:

a. There is no drop at the end of the chute,

b. Containers are handled slowly enough to permit steadying them near the end of the chute and with sufficient care to allow removal without danger of striking other containers, and

c. Thick cushions or mats are placed at the discharge end of the chute. Chutes may be used for handling heavy containers provided that restraining lines are used to ease them down and the discharge requirements, as specified above, are met.

d. Additional information is provided in paragraph 9-2.8.

10-1.1.10. Containers with loose fills (that is, powder tanks, cartridge tanks, and barrels) shall never be rolled. Projectiles should not be rolled, but should be handled by projectile trucks, tongs, carriers, or slings. When projectiles must be rolled, sufficient dunnage shall be laid down before the projectiles are rolled. The projectiles shall be kept under hand control at all times so they do not bump into each other causing arming of their fuzes, or damage or loosening of their windshields, caps, tracers, fuzes, bourrelets, rotating bands, or identification markings.

10-1.1.11. Any evidence that ammunition and explosives have been handled roughly, dropped or damaged, or explosive material has been exposed shall be reported promptly to the responsible officer or supervisor and inspected immediately in accordance with the ammunition technical manual or by Explosive Ordnance Disposal (EOD) personnel. Ammunition and explosives shall not be moved or handled until the safety determination has been made, unless not moving the material increases the risk for a greater mishap. Determination of waste disposal of damaged munitions must come from the Designated Disposal Authority (DDA) assigned for that naval program. A mishap report shall be submitted in accordance with OPNAVINST 5102.1 (series) regardless of the distance the ammunition or explosives is dropped. Maximum drop heights that have been determined for specific types of ammunition items are found in weapons technical manuals or by NALC/NSN in NAVSEA SW020-AC-SAF-010.

10-1.1.12. The display of a red flag at any building or location where ammunition and explosives operations are in progress shall comply with the requirements of paragraphs 9-2.4.5, 11-3.3, and 12-11.5.1.

10-1.1.13. All personnel involved in handling ammunition and explosives shall be trained and qualified in accordance with paragraph 2-3.

10-1.1.14. The safe working load (SWL) of any equipment shall not be exceeded during handling operations.

10-1.1.15. Safety mechanisms such as safety pins shall not be removed or tampered with in any way except when it is necessary for operational use.

10-1.1.16. Electric-powered elevating and transporting belt conveyors that comply with the specifications in this publication, may be used to load, unload, and transfer items between a dock, pier, or platform and a lighter, barge, or other vessel provided:

a. Belt speed does not exceed the capability of the handling crews at the discharge end with a maximum speed not to exceed 120 feet per minute.

b. Cleats are attached to the belt when the angle of elevation exceeds 15 degrees.

c. The discharge end is attended at all times during an operation.

d. The motor may be stopped instantly at either end of the conveyor by conveniently placed pushbutton switches.

10-1.1.17. Equipment subject to periodic testing that has been repaired or modified shall be proof tested before use.

10-1.1.18. Equipment that fails load testing shall be repaired or excessed.

10-1.1.19. Wooden boxes Treated with Preservative. All Grade A wooden boxes (MIL-B-46506 and MIL-B-2427) treated with wood preservative shall be handled with caution. Activities shall develop or incorporate into an existing standard operating procedure (SOP) appropriate controls for the safe handling and disposition of chemically-treated wooden boxes as appropriate and in consultation with occupational safety and health, medical (e.g., industrial hygiene), and environmental personnel. As with all chemicals, unnecessary exposure should be avoided. Personnel involved with handling treated wooden boxes should wear appropriate PPE to avoid dermal contact to the extent feasible. Additional precautions, including respiratory protection, may be warranted. Follow the handling, storage, and personal protection measures specified in each manufacturer's safety data sheet and in local industrial hygiene surveys. The UL.S. Army Public Health Center Technical Guide 146, "Guide for Handling, Reuse, and Disposal of Chemically Treated Wood Material," provides guidance on the handling, reuse, and disposal of wood products treated with chemical preservatives that have been determined to be toxic to human health and the environment, specifically creosote, pentachlorophenol (pcp), and chromated copper arsenate.

10-1.1.19.1. Of particular concern are wooden ammunition boxes that were treated with pentachlorophenol (PCP). PCP presents a serious hazard to personnel through dust inhalation or absorption through skin if the PCP leaches out of the wood. PCP treatment was phased out between 1975 and 1981, however, boxes remain in the inventory. Acceptable PCP boxes have a clear, waxy appearance. PCP-treated items showing evidence of crystallization, surface wetness, or tackiness represent potential worker safety/health hazards or environmental hazards. In the latter cases, do not touch the box, cease operations, and notify the supervisor immediately.

10-1.1.19.2. Proper disposal measures should be used for any treated materials to minimize environmental release. All wooden ammunition boxes must be disposed, recycled, or reclaimed per Federal, state, and local environmental control regulations. Common markings used to identify treated wooden ammunition boxes are listed below; however, this list is not comprehensive. Each treatment chemical may require different safety and environmental management procedures.

P = Pentachlorophenol (PCP)

PA = Copper-8-Quinolinolate

PB = Zinc Naphthenate

PC = Copper Naphthenate

PD= Wolman® AG (tebuconazole, propiconazole, imidacloprid, and borate)

PE= Copper Carbonate (plus tebuconzaole)

PF= Copper Carbonate (plus tebuconzaole and propiconazole)

PG = Copper Monoethanolamine Complex

PH= Copper Ethanolamine Complex (plus tebuconazole and propiconazole)

10-1.1.20. When using any handling equipment (that is, OHE, MHE, WHE, AWSE) never lift more than one pallet or container unless it is strapped together as a unit load and is within the rated capacity of the equipment.

10-2. PALLETIZED UNIT LOADS.

When loading containers with thin walls, extreme care shall be taken to determine which surfaces should be placed against supporting structures. During transport, precautions shall be taken to avoid damage caused by vibration to painted or other finished surfaces that might render the item unserviceable when it arrives at its destination.

10-2.1. PALLET LOADS. Palletized unit loads shall be constructed in accordance with Military Standards MIL-STD-1320, MIL-STD-1322, MIL-STD-1323, (formerly Weapons Requirements (WR)-53, and -54), and WR-55, NAVSEA drawings, or other Army or Air Force standards that specify palletizing and de-palletizing procedures, and materials for the items being handled. In addition to the construction requirements of the MIL-STD, all requirements of the General Military Standard shall apply.

NOTE

As they are updated, both WRs and MIL-STDs will be issued as NAVSEA drawings. The most recently issued loading documents are NAVSEA drawings.

10-2.2. PALLET INSPECTION. Wood pallets shall be inspected to ensure that no nails are loose or protruding from the top surface of the pallet. Split boards in wood pallets should be replaced before the pallets are used. Steel pallets and pallet adapters shall be inspected for broken weld joints and bent or otherwise defective parts. If the function of the pallet is affected, the broken parts must be repaired or replaced before the pallet or adapters are used.

10-2.3. UNIT LOAD INSPECTION. The unit load shall be inspected for its conformity with the applicable loading document described in paragraph 10-2.1. Items to be inspected include workmanship, arrangement of items on pallet, proper selection of pallet and accessory material, unobstructed handling equipment access facilities, proper position and tension of strapping, double crimping of seals, and unit load markings. The seal should have a minimum tensile strength equal to 75% of the strength of the strap. Strapping shall never be reused or retensioned if it is found to be loose during load inspection. Loose strapping shall be removed and disposed of, and new strapping

applied. Shipping containers equipped with interlocking features as shown in figure 10-1 are authorized to be secured together in accordance with the appropriate loading document described in paragraph 10-2.1. For loads constructed in this manner, there is no need for additional steel strapping (banding) and seals.

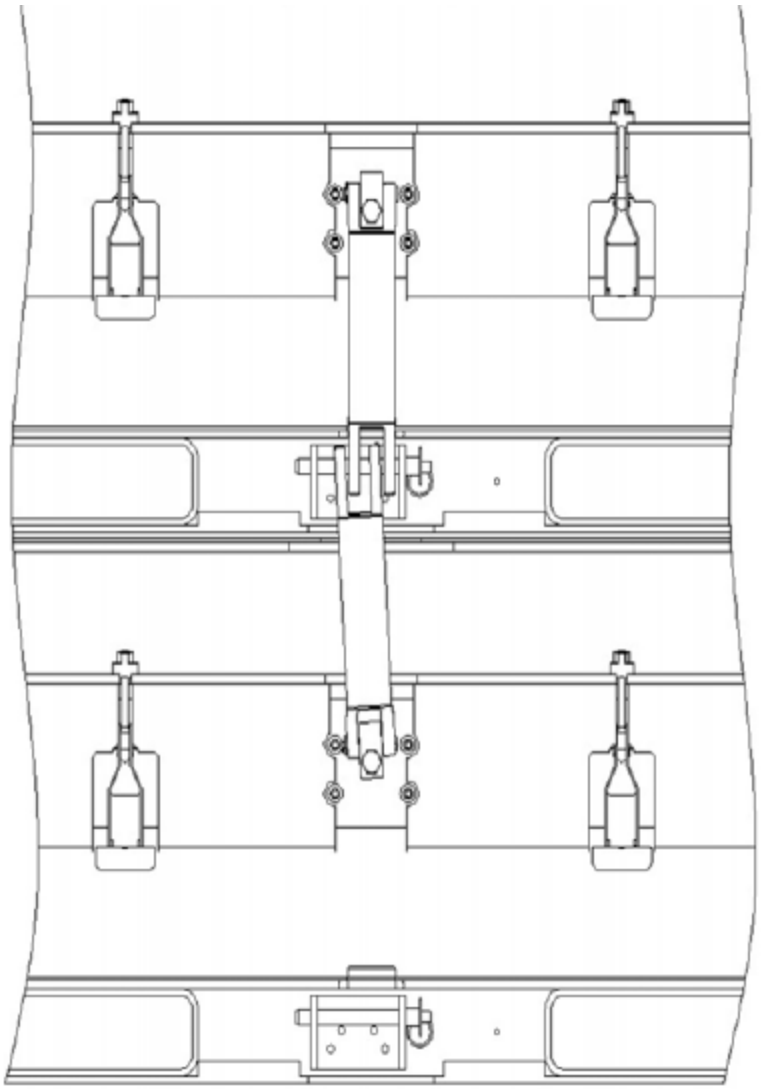

Figure 10-1. Container Lift Arm Assembly

10-2.4. TIEDOWN EQUIPMENT INSPECTION. All steel strapping, seals, chains and load binders, and webbing strap assemblies shall be visually inspected prior to use. Chains shall be free of excessive stretch, gouging, bent links, wear, or other noticeable defects. Any deficiency shall be cause for rejection. Webbing strap assemblies with cuts, fraying, or conditions other than normal shall be considered unsafe for use. For complete inspection instructions, refer to Maintenance Index Page

(MIP) 7721/R85-88, MRC R-1 (series) for webbing strap with chain tiedown and 7721/R86-10 (series) for webbing strap with flat hook tiedown.

10-3. APPROVED HANDLING EQUIPMENT.

10-3.1. GENERAL. All handling equipment that is used for routine operations shall be approved by Naval Air Systems Command (NAVAIRSYSCOM); Director, Strategic Systems Program (DIRSSP); or Naval Surface Warfare Center Indian Head Division (NSWC IHD) Detachment Picatinny, Naval Packaging, Handling, Storage and Transportation (PHST) Center, Picatinny Arsenal, NJ, as applicable. Approved OHE is described in NAVSEA OP 2173, MHE in SW023-AH-WHM-010 and WSE in NA 11-140-25. Non-powered, non-lifting handling equipment which is unique to a particular activity shall meet the local certification requirements outlined in paragraph 10-3.3.

10-3.1.1. Approved Configuration. Ordnance handling equipment shall be used only in the configuration for which it was designed, as shown in OP 2173, OR-67s, weapons technical manuals, and other approved NAVAIR, DIRSSP or PHST Center handling equipment documentation. All OHE shall contain a serial number that has been applied by either the original manufacturer for newly procured items or locally for older items. Allowances for portable OHE are maintained using the OHE allowance and inventory report format provided via the NOSSA Restricted Website at https://nossa.dc3n.navy.mil.

10-3.2. MODIFICATIONS. Modifications to or use of OHE or MHE shall be in accordance with NAVSUP P-538 or SW023-AH-WHM-010. Complete details of the proposed modification along with the necessary photographs, drawings, engineering data, justification for modification, and the anticipated modification or as-used configuration change shall be forwarded to the appropriate design authority. Copies of approved modification will be retained on file in the history jackets.

10-3.3. LOCAL CERTIFICATION OF HANDLING EQUIPMENT. Activities are authorized to procure and use handling equipment unique to their activity's needs and of their own design without approval of PHST Center, provided the handling equipment is non-powered and, nonlifting, does not replace equipment described by function in NAVSEA OP 2173, SW023-AH-WHM-010, NA 11-140-25 and follows the design guidance of MIL-STD-1365. The term "nonlifting" applies to those operations when the load is not elevated or hoisted by the equipment. Locally designed equipment and certifications will be subject to periodic safety inspections and evaluations. These requirements apply to all new or previously developed or procured equipment. Procedures for local certification of handling equipment at RDT&E activities are provided in paragraph F-10.17.

10-3.3.1. Regulatory Requirements. Activities which procure and use handling equipment of their own design must have the equipment approved, in writing, by the activity's Commanding Officer or an appropriate alternate representative, who must be designated, in writing, by the Commanding Officer. As a minimum, the equipment and supporting documentation for that equipment must meet the following requirements:

a. A local instruction shall be instituted, outlining a configuration management plan in accordance with ANSI/EIA-649, and describing the configuration for which the equipment is intended. The plan shall include requirements for cross-referencing nomenclature and/or a part number that traces the equipment design to a specification, engineered drawing, or manufacturer's model number.

b. All equipment shall be marked with nomenclature and SWL.

c. The SWL shall be traceable to a test or detailed engineering analysis justifying the SWL based upon the intended, as-used configuration of the equipment.

d. Maintenance procedures must be established that include a prior to use inspection, and other periodic inspections and tests necessary to ensure the integrity of the equipment for its use with ordnance. The procedures shall also include details as to replacement of components, welding, stenciling or marking of equipment, and any load testing required as a result of repairing/replacing a load bearing section of the equipment. Periodic testing, if accomplished, shall be at 40% of design load for items designed at 3:1 or 5:1. Proof testing, if accomplished, during initial acceptance or when repairing or replacing a load-bearing component (mandatory), shall be at 60% of design load for items designed at 3:1 or 5:1.

e. SOPs shall describe the area where the equipment is authorized to be used and provide detailed procedures for the use of the equipment.

f. An equipment file shall be established, maintained and be available upon demand to any inspector. This file shall include, as a minimum:

(1) Reference to the local configuration management instruction;

(2) Maintenance procedures as required by paragraph 10-3.3.1.d;

(3) Test report or analysis as required by paragraph 10-3.3.1.c;

(4) Operational instruction as required by paragraph 10-3.3.1.e;

(5) A statement confirming the requirements of paragraph 10-3.3; that is, a statement that the locally designed equipment does not replace approved equipment described in NAVSEA OP 2173, SW023-AH-WHM-010, or NA 11-140-24 or -25.

(6) Written approval for the item.

g. Modifications to or use of locally approved equipment in other than the approved, as-used configuration shall separately meet the requirements of paragraph 10-3.3 and all subparagraphs.

10-4. SAFETY REGULATIONS FOR USE OF MATERIALS HANDLING EQUIPMENT (MHE).

The requirements for safe operation, proper equipment selection, licensing of operators and minimum instructor qualifications are specified in NAVSEA SW023-AH-WHM-010. Requirements for fueling MHE are provided in paragraph 4-1.24.2. Requirements for an MHE battery charging station are as follows:

a. Charging shall only be performed in an area specifically designated for that purpose.

b. The charging station shall be sited at an intraline distance (K18) from any Potential Explosion Site (PES), when it serves an entire activity/base or if its loss would cause an immediate loss of a vital function.

c. When the charging station supports individual explosives operations it may be sited at fire separation distance (50 feet, or 100 feet for lithium batteries) or within the same building provided the following requirements are met:

(1) All OSHA and environmental requirements applicable to battery charging operations are addressed satisfactorily.

(2) Battery charging shall not be performed in magazines or other spaces where ammunition and explosives are present.

(3) There are no openings (windows, doors, and holes) in the wall separating the battery charging station from an area containing ammunition and explosives.

(4) A minimum 1-hour fire wall is provided between the charging station and areas containing ammunition and explosives.

(5) Adequate ventilation shall be provided. This can be achieved by using an outside location, room, or space that is substantially open and free to the natural passage of air (such as overhead protection and no walls, closed on one side, or have suitably designed windbreaks), or an enclosed, or partially enclosed space provided with mechanical ventilation adequate to prevent ignitable concentrations of flammable gases or vapors. This level of ventilation can be achieved by providing a minimum of four air changes per hour; locating the exhaust as the highest interior point in the structure; and using both supply and exhaust equipment located to intake from, and vent directly to, the outdoors.

(6) The ventilation system must be interlocked to the charging system, such that the charger is automatically turned off if the ventilation system fails.

10-5. ORDNANCE HANDLING EQUIPMENT (OHE) AND ARMAMENT WEAPONS SUPPORT EQUIPMENT.

Ordnance Handling Equipment (OHE) is specially-designed mechanical equipment used for assembling, disassembling, handling, transporting, lifting, positioning, rotating or containing conventional weapons, ammunition, explosives, and related components. While typically portable in nature and not self-propelled, OHE can serve as a link between permanently mounted and mobile lifting equipment (for example, cranes, forklifts, etc.). OHE is used for dockside loading and offloading; intra-station handling in production, maintenance, and storage areas; shipboard handling and transfer at sea operations. Examples of OHE include adapters, beams, carriers, dollies, hand trucks, restraint fixtures, slings, and stands. The use of OHE for handling ammunition, explosives, and ordnance shall comply with the following safety provisions.

10-5.1. SELECTION OF OHE. The proper type of OHE should be selected for the type of handling situation involved. Selection factors that should be considered are SWL of the OHE, the interface between the OHE and the item being lifted, and the height of lift.

10-5.2. SAFE OPERATING INSTRUCTIONS.

10-5.2.1. Slings, bands, and beams shall not be used at greater than SWL.

10-5.2.2. Loose shackles; i.e., shackles that are not an integral part of the OHE design, shall be inspected in accordance with paragraph 10-5.3.2.5. The SWL for shackles shall be determined by calculating 80% of the rated capacity marked in raised letters on the shackle. For example, if a shackle has a rated capacity of 1,000 pounds, the SWL is 800 pounds.

NOTE

Shackles which are an integral part of approved Navy OHE have been appropriately de-rated to meet Navy criteria and are therefore exempt from this statement. Only shackles which have been permanently marked in raised letters with the SWL, size, and manufacturer shall be used.

10-5.2.3. Approved pallet crates are described in NAVSEA SW023-AG-WHM-010. See NAVSEA SW023-AG-WHM-010 for dunnage requirements and on station movement of ammunition, explosives and ordnance by truck and railcar.

10-5.2.4. Tag (steadying) lines shall be used to guide lifts whenever there is a possibility of the load moving out of control. Tag lines shall be of adequate length and free of loops and knots.

10-5.2.5. Nylon webbing cargo net slings, commonly known as "cargo nets", shall not be used alone for transferring empty or filled, thin-walled ammunition containers which are likely to be damaged. When ammunition containers are hoisted or lowered with nylon webbing cargo net slings, a rigid wooden platform or base should be fitted in the net upon which the containers can be placed, stacked, or piled. Cargo nets may also be used as safety nets when they are rigged between the ship and the dock or conveyances to catch items that may be dropped. When used in this manner, it should be covered with a tarpaulin if the items being handled are small enough to pass through the mesh. Approved applications for cargo nets are described in NAVSEA OP 2173 Volume 2.

10-5.2.6. Commercial-off-the shelf (COTS) master links, including oblong, round, and pear shapes, are authorized for use when interfacing crane hooks with OHE. The SWL for master links shall be determined by calculating 80% of the rated capacity marked in raised letters on the master link. For example, if a master link has a rated capacity of 1,000 pounds, the SWL is 800 pounds. This does not apply to master links which are an integral part of approved Navy OHE, and have been appropriately de-rated to meet Navy criteria. Only master links which have been permanently marked in raised letters with the SWL or size and manufacturer shall be used. Master links shall be marked, maintained, inspected, tested, certified, and operated in accordance with NAVFAC P-307.

10-5.3. MAINTENANCE, INSPECTION, TESTING AND MARKING OF OHE.

10-5.3.1. Maintenance. Organizational level maintenance of OHE shall be as specified in applicable Maintenance Requirement Cards (MRC) issued for each site. Organizational, intermediate, and depot level maintenance shall be as specified in OR-99, NAVAIR 19 Series Operation and Maintenance Manuals, or in equivalent documents. If no MRCs are available, contact NSWC IHD, Detachment Picatinny, PHST Center.

10-5.3.1.1. Inspection. A daily prior to use inspection of OHE shall be performed as specified in applicable supporting documentation (MRCs, technical manuals, etc.) for the item. In addition, a careful visual inspection shall be made after each use to ensure the continued integrity of the OHE. If the OHE's integrity is in question, another full prior to use inspection shall be performed. If an inspection reveals any defects, the equipment shall be tagged and removed from service until acceptable repairs are made. Visually inspect bolts and pins for elongation wear, deformed threads, and other signs of imminent failure latch mechanisms and quick-release pins for proper operations and surface finishes for gouges, scratches, and loss of protective coating.

NOTE

The following minimum inspection procedures shall not be used in lieu of approved inspection procedures (MRCs, etc.).

10-5.3.1.1.1 Slings and OHE Using Nonmetallic Lifting Parts. Shall be inspected immediately prior to their use, from time to time during use, and before periodic testing for wear, frayed threads, broken stitches, fractured or distorted fittings, holes, mildew, dry rot, severe abrasions or deterioration due to contact with foreign material like oil, fuel, solvents, caustic fluids, dirt, lye, stencil ink, etc. Twists, knots, and similar distortions shall be corrected before use.

NOTE

Stenciling of non-metallic, weight-bearing components of lifting equipment shall be as described in paragraph 10-5.3.3.

10-5.3.1.1.2 Metal Carriers, Beams, and Bands. Prior to use and from time to time during use, the equipment shall be inspected for distortion, fractures, misalignment, wear, corrosion, deformation, loosening, cracked welds, pitting, gouges, and missing parts.

10-5.3.1.1.3 Slings Using Chain as Lifting Part. Immediately before use, from time to time during use, and before testing, inspect the chain on a link by link basis, the chain coupling, and the safety swivel hooks, with special attention to detect deficiencies noted on the applicable MRC for these items.

10-5.3.1.1.4 Hooks. When visually inspected and suspected of being cracked, the protective finish in the potentially cracked area should be removed for closer inspection. Refinishing; that is, painting or galvanizing is not required.

10-5.3.1.1.5 Intermodal Container Lifting Frames Or Spreader Bars. Inspection shall comply with the requirements of NAVFAC P-307.

10-5.3.1.1.6 Inspect for Marking. OHE shall be marked with equipment identification; that is, part number or mark-mod nomenclature and SWL in accordance with engineered drawings. Marking indicating that equipment has been tested shall comply with paragraph 10-5.3.3.

10-5.3.2. Testing. Slings, bands, beams, strongbacks, spreader bars, and similar OHE shall be tested as follows.

10-5.3.2.1. Refer to NAVSEA OP 2173 to see if weight testing is required for a particular piece of OHE, and to determine the appropriate weight test manual to be used for instructions on weight testing. Test loads, arrangements, fixturing and general guidance for NAVSEA-managed OHE is provided in NAVSEA SG420-AP-MMA-010 and for NAVAIR-managed OHE in NAVAIR 17-1-127. If testing arrangements are unavailable in either document, contact:

a. NSWC IHD, Detachment Picatinny, PHST Center (Code G13) for NAVSEA managed OHE;

b. NAVAIRWARCEN Lakehurst (Code 4.8.2.6.0.OB) for NAVAIR-managed OHE.

10-5.3.2.2. OHE used ashore shall be tested once every 4 years unless otherwise directed or specifically exempted by Naval Ordnance Safety and Security Activity (NOSSA)/ NAVAIRSYSCOM/DIRSSP and NSWC IHD, Detachment Picatinny, PHST Center. Ships or fleet-

operated shore activities may send equipment to Public Works Center Philadelphia Detachment Site Earle (Building C-15) for repair or testing at the ship's expense. Transportation costs are not charged to the ship. OHE shall be periodically weight tested by a certified activity, providing testing complies with NAVSEA SG420-AP-MMA-010. If repaired, the OHE shall be tested before use.

10-5.3.2.3. Missile/booster handling bands shall be tested at 5-year intervals preferably to coincide with missile overhaul. Bands required for stowing missiles and boosters aboard ship are an exception. These bands must have been tested within 12 months of their installation date. Missiles or boosters that are stowed aboard ship in handling bands may be off-loaded regardless of the handling band test date, provided the handling bands are visually acceptable. Missile/booster handling bands and slings, harnesses, etc. that are an integral part of shipping containers and used only for installation/removal of contained ordnance need only be tested during container refurbishment. Because of limited sling usage, integral slings, bands, and harnesses on missiles or boosters that have been left in long term storage in containers, provided the slings are visually acceptable, may be used for unloading the components from the containers. A visual inspection shall again be made prior to reinstallation of the slings in the container.

10-5.3.2.4. Cargo nets do not require periodic testing but shall be thoroughly examined for defects prior to each use in accordance with applicable periodic maintenance requirements. Nylon rope beckets, an accessory of the nylon cargo net, and Cargo Pallet Net Mk 16 Mod 0 shall be tested in accordance with NAVSEA SG420-AP-MMA-010.

10-5.3.2.5. Loose shackles are exempt from periodic weight testing requirements. However, a careful visual inspection for cracks, and potential deformation/dimensional change shall be made before and after each use.

10-5.3.2.6. Nonmetallic slings shall be weight-tested once every four years with test loads and arrangements complying with paragraph 10-5.3.2.1. The slings must recover to within 2% of the initial length recorded prior to the start of the load test within 24 hours under the same humidity and temperature conditions as during the testing period. Nonmetallic slings which have not been used for 6 months or more may be exercised to eliminate material shrinkage prior to conducting weight test. Slings shall be pulled to SWL, held for 1-minute and then relaxed prior to conducting overload test. Nylon web slings shall be subjected to continuous visual inspection during use in order to identify obvious physical defects that reduce the strength of the component materials and render the sling unsatisfactory for further use. The following specific criteria is applicable to all nylon web slings:

a. A cut, hole, or tear in the fabric of the sling is cause for rejection.

b. External wear of the sling fabric is characterized by the presence of a fine nap or fuzz distributed evenly on the fabric surface. This normal wear does not cause a significant reduction in the strength of the sling. Areas of excessive wear or damage to the webbing, yarns, and stitches shall be considered cause for rejection.

c. Surface abrasion and chafing is identified by the presence of a hard layer on the webbing produced by fusion of the fibers due to frictional heat from abrasion. When the chafed area shows broken yarns and/or stitches in addition to surface fusion, there is cause for rejection of the sling.

d. Broken stitching in the body of the sling that holds the layers of webbing together can be acceptable up to 2 inches in length in any single run, if no other defect exists in that area. In any two adjacent runs, broken stitching can be accepted up to 1-inch if this is the only defect present. When

doubt arises about the serviceability of any sling because of the defects, the sling should be removed from service and subjected to a load test for verification.

10-5.3.2.7. Beams, carriers, hooks, links, slings, and other similar OHE that do not use wire rope, chain, fiber rope, or plastic shall be examined by magnaflux or dye-penetrant methods when suspected of defects. Testing slings, cables, and cargo nets should not be confused with testing prime mover equipment such as crane and vehicle structures that are specified in other documents.

10-5.3.2.8. Station's equipment shall be used when handling ammunition and explosives pier side. If the activity does not have the required handling equipment, ship's equipment may be used provided it is tested in accordance with NAVSEA instructions.

10-5.3.2.9. Commercial-off-the-shelf (COTS) master links, including oblong, round, and pear shapes, that are not an integral part of the OHE design are exempt from periodic weight testing requirements. However, a careful visual inspection for cracks and potential deformation/dimensional change shall be made before and after each use.

10-5.3.3. Marking Tested OHE. Marking of OHE shall be in accordance with NAVSEA SG420-AP-MMA-010.

10-5.4. FIBER ROPE. Fiber rope shall not be used to handle ammunition or explosives.

10-5.5. WIRE ROPE. Special care should be taken to prevent kinks and sharp bends in wire. Of particular importance is the detection of a wire rope in which a kink has been pulled through to straighten it. The resultant deformation shall render the rope unserviceable. If an inspection reveals any of the following defects, tag and remove the equipment from service until repairs are made.

10-5.5.1. Inspect the outside wires of wire rope for evidence of:

a. Corrosion or pitting;

b. Kinks, crushing, birdcaging, or any other physical damage that has resulted in distortion of the wire rope structure;

c. Six or more broken wires in one rope lay length or three or more broken wires in one strand lay length.

10-5.5.2. Wire rope should be lubricated thoroughly and frequently in accordance with existing directives. Avoid sudden strains on wire rope. Select blocks and sheaves large enough to avoid chafing and wearing of the rope. Fiber core wire rope shall not be used. See MIL-HDBK-1038 for wire rope requirements.

10-5.6. WEAPONS SUPPORT EQUIPMENT FOR AIRCRAFT HANDLING. Armament handling equipment used for aircraft loading/unloading of explosive ordnance shall be tested and marked in accordance with applicable NAVAIR 19-600 (series) maintenance requirement cards.

10-6. WEIGHT HANDLING EQUIPMENT (WHE) (CRANES, LIFTS, HOISTS).

The following paragraphs are applicable to WHE (i.e., cranes, hoists, lifts) used to handle ammunition and explosives.

10-6.1. GENERAL REQUIREMENTS FOR WHE. All WHE shall be:

a. Maintained, inspected, tested, certified, repaired and altered in accordance with NAVFAC P-307 and the following provisions:

(1) WHE at ammunition and explosives-capable piers, including floating cranes, require third party certification (TPC) prior to loading/unloading cargo vessels. Cargo vessels, as defined in 22 CFR 121.15, are United States Navy (USN) auxiliaries (underway replenishment ships, material support ships); Military Sealift Command (MSC) ships; military ships equivalent to USN auxiliaries/MSC ships, barges, lighters, and commercial vessels.

(2) WHE at ammunition and explosives-capable piers, including floating cranes, do not require TPC prior to loading/unloading vessels not noted in sub-paragraph (1) above, as these loads are defined as ships stores.

b. Operated in accordance with NAVFAC P-307 as supplemented by the following:

(1) Load descent shall be controlled at all times by use of the power-down mode.

(2) WHE that have both power-down and free-fall modes available shall have the free-fall mode disabled or locked out.

(3) Except as noted below, ordnance lifts are considered to be a category separate from those described in NAVFAC P-307 (critical/non-critical). Ordnance lifts have unique procedures and approved OHE that must be used. Critical lifts are:

(a) Those lifts of ordnance from ships/submarines where binding may occur, during the extraction of VLS/CLS equipment from launcher cells, and when using tilt fixtures.

(b) Described in NAVFAC P-307 subparagraph 10.4.1(d) with the exception of Category 3 cranes.

(c) Described in NAVFAC P-307 subparagraphs 10.4.1(e), (f), and (h).

An ordnance handling team leader, who is qualified and certified by OPNAVINST 8023.24 (series) for the family of ordnance being lifted, will supervise all critical lifts. The qualified and certified ordnance handling team leader will be responsible for providing a pre-lift brief for each critical lift, to ensure the roles and responsibilities of all personnel are understood and fully coordinated.

(4) Load Indicating devices (LID) that meet the requirements outlined in NAVFAC P-307 are authorized for ordnance lifts. LIDs are not required for all ordnance lifts, but are required for complex lifts where the potential exists for overload of either the OHE or hoist/crane due to binding.

c. Employed only in accordance with an SOP that:

(1) Has been reviewed by the individual who has met the mandatory training requirements of paragraph C-3 of appendix C.

(2) Addresses the intent of the Crane Team requirements of section 10.2 of NAVFAC P-307.

d. Operated by personnel trained and licensed, when required, in accordance with sections 6,7,and 8 of NAVFAC P-307 and assisted by ground/deck personnel that have been trained in communications according to section 10.6 of NAVFAC P-307.

e. Grounded in accordance with paragraph 6-6.3.

f. Fitted with electrically insulated links as specified in paragraph 10-6.2.

10-6.2. ELECTRICALLY INSULATED LINKS.

10-6.2.1. Insulating links are used to prevent the flow of electricity from traveling down the WHE wire-lifting cable, through the metal hook, to the item being lifted. The three primary sources of electricity that may travel down the wire are:

a. Lightning that directly strikes the WHE, or an item adjacent to the WHE causing side flashes to arc over or couple onto the WHE.

b. Resultant of a strike to an electrified power line.

c. Radio Frequency (RF) energy generated by communication and radar transmitters collects on the boom.

10-6.2.2. Requirements. Electrically insulated links are required for all WHE (regardless of their location) unless all of the following can be satisfied:

a. The presence of a thunderstorm is determined to be non-existent during operations (see paragraph 6-10 for further information on operations during thunderstorms).

b. The operations are sufficiently removed from overhead power lines, assuring that the WHE will not come into contact with the lines,

c. RF emissions control is in effect regardless of the HERO classifications of the ordnance being handled.

10-7. SAFE HANDLING REGULATIONS.

10-7.1. BULK EXPLOSIVES. Bulk explosives include black powder high bulk explosives, and initiating explosives.

10-7.1.1. Black Powder.

a. A container of black powder shall never be opened in a magazine, room, or compartment that contains other explosives or other black powder except when the black powder is sealed in primers or similar devices, or is required to maintain operations or a loading procedure.

b. Containers of black powder shall never be moved or transported by dragging, sliding, skidding, rolling, or passing from hand to hand, but shall always be carried by hand or on trucks with the containers adequately secured.

c. Spilled or contaminated black powder shall be collected immediately and placed in a water-filled container designated for that purpose. When black powder has been spilled on floors or benches, all work shall be suspended until the powder has been collected and placed in the water-filled container.

d. Not more than three persons shall be permitted to work with, or to be in the immediate vicinity of, exposed black powder. For operations requiring more personnel, the work shall be divided into areas separated by protective, intervening interior barricades so that only three persons are exposed to each operation.

e. Employees working in black powder magazines or handling black powder, either in filling houses or in transport, shall wear flame resistant clothing and conductive safety shoes.

f. Personnel working with exposed black powder shall not carry or have in their possession any smoking tobacco, pipes, lighters, matches, or readily combustible material. They shall not wear jewelry or garments made of silk or synthetic fibers such as nylon or dacron. Personnel working with exposed black powder shall not have metallic buttons, catches, or snaps on clothing or carry metallic objects that might produce sparks.

g. Particular attention shall be paid to black powder dust, and every building or room where it is likely to accumulate shall be frequently and thoroughly cleaned with water. Under no circumstances shall a vacuum dust collecting or vacuum cleaning system be used for removing black powder dust. Cracks in floors, walls, or ceilings shall be suitably repaired or covered to prevent dust from accumulating in them.

10-7.1.2. High Explosives.

a. Loose explosives or open boxes containing explosives shall not be permitted in any building except operating buildings during the preparation of ammunition or the repackaging of explosives.

b. When loading and handling bulk high explosives, a consider-able quantity of dust may accumulate. This dust is highly explosive and may become dangerous if allowed to accumulate. Periodically, and after completion of the loading or handling operations, the dust shall be swept up and all contaminated walls and equipment shall be cleaned with water, which must be environmentally treated before discharge.

c. If explosives spill or sift from a leaky container, all work shall be stopped until the explosives have been swept up and removed.

d. Extreme care shall be exercised to keep scouring and cleaning compounds that contain alkalis out of buildings where high explosives mixtures are processed, stored, or are present in any form. Cleaning materials shall be limited to hot water, steam, and fiber bristle brushes. Alkalis form sensitive explosive compounds with some high explosives and spontaneous ignition can occur when nitro-explosives and alkalis are together in the presence of moisture. If chemicals are used to prepare metal parts for loading, it is mandatory that these parts be completely neutralized and rinsed in accordance with approved procedures prior to further processing.

10-7.1.3. Initiating Explosives.

a. All sources of friction, heat, spark, or flame shall be eliminated from any location where bulk initiating explosives are handled or stored.

b. Initiating explosives should not be allowed to freeze, and for most processes must be thawed, before they can be handled safely. Extreme care must be exercised in performing a hazards analysis to prepare an SOP involving processes requiring frozen or very cold initiating explosives, along with any other energetic materials, as their sensitivity to initiation can increase at low temperature.

10-7.2. SMOKELESS POWDER.

a. Smokeless powder should be protected from adverse conditions of moisture and temperature. If it becomes wet or damp or if there is any reason to suspect that it has been exposed to moisture, it should be segregated from other powder until stability tests have proven it satisfactorily stable. Since the moisture content of the powder is a very important factor in ballistic functioning, advice shall be obtained from NSWC IHD as to whether the powder should be retained for loading.

b. Smokeless powder in containers shall not be exposed to the direct sunlight long enough to raise the temperature of the powder above 100°F. Containers that require protection from the sun shall be covered with a tarpaulin placed so that the air can circulate through the stack.

c. Spilled smokeless powder or powder dust should be removed immediately. Dragging powder boxes over smokeless powder grains or over concrete floors and platforms can cause fires. Extreme care shall be taken to prevent powder from dropping into cracks and crevices or lodging in places where it may remain over a long period of time without being detected.

d. Static electricity presents a hazard during the handling of smokeless powder. Nonconductive smokeless powder grains can generate electrostatic charges that, in the presence of the highly flammable solvents used in the manufacture of smokeless powder, can create a significant hazard. To reduce the hazard during the transfer of smokeless powder, all metal objects such as powder boxes, conveyors, hoppers, chutes, casing, and so forth with which the smokeless powder may come in contact shall be grounded. Operators should ground themselves to the grounding system prior to removing powder from the container. No electrostatic precautions such as grounding are required when handling closed powder boxes containing bulk smokeless powder. However, powder boxes must be grounded to an approved grounding system whenever bulk smokeless powder is transferred in or out of the powder box. Refer to paragraph 13-7.

10-7.3. GUN PROPELLANT CHARGES. Gun propellant charges consist of separated ammunition charges and separate loading ammunition charges.

10-7.3.1. Separated Ammunition Charges.

a. The relatively snug fit required of a separated ammunition charge in a gun requires that no deformation of the case occurs. Careful handling is of great importance at all times to prevent damage to the container or to its contents.

b. Whenever a separated ammunition charge is dropped, it shall be examined by an authorized inspector for serviceability. If a separate ammunition charge or a tanked charge is dropped from a height of 5 feet or more, the charge shall be set aside and broken down. The primer shall be disposed of in accordance with applicable instructions. The other components shall be handled as specified in appropriate rework instructions. Activities without the facilities or authority to break down cartridges shall request disposition instructions from the program manager.

10-7.3.2. Separate Loading Ammunition Charges.

a. Because the amount of black powder in the ignition end of separate loading ammunition charges is relatively small, smokeless powder is the controlling factor for regulations on handling separate loading ammunition. Therefore, the regulations are similar to those for bulk smokeless powder specified in paragraph 10-7.2. However, if charges become damaged so that the black powder

end is broken, they shall be handled in accordance with the safety regulations described for black powder in paragraph 10-7.1.1.

b. Safety precautions for handling bulk smokeless powder outlined in paragraph 10-7.2 are applicable to separate loading ammunition charges.

c. Accidental ignition from a static discharge within the tank is a potential hazard. Motion and consequent friction between the powder bag and the inside of the tank built up a static charge as in a capacitor. This static charge can ignite the ether-air mixture within the tank when it is subjected to longitudinal motion. To prevent the possibility of an accidental ignition, powder charges shall be packed in tanks in a manner that will avoid any longitudinal movement within the tank and prevent the accumulation of a static charge. This is done by using spacers as described in paragraph 10-7.3.2.e below, to prevent capacitor action between the bottom of the tank and the graphited black powder ignition end. If inspection reveals tanked powder charges without spacers, the spacers shall be installed. The following additional safety precautions shall be observed pending their installation.

(1) Tanked charges shall not be rolled.

(2) When lifting and moving tanked charges, the bottom of the tank shall be held lower than its top at all times.

d. When removing the powder charge from the tank, the tank shall be adequately grounded by resting it on a grounded brass plate or by using other appropriate means of grounding.

e. Each bag charge powder tank containing a charge or a section of a charge shall have a wooden bottom spacer constructed to provide a space of not less than 3/4-inch between the inside tank bottom and the top of the spacer. This is mandatory. No metal shall be used in the construction of this spacer. In addition, there shall be sufficient cardboard spacers provided to prevent any lateral movement of the charge or partial charge contained in the tank.

10-7.4. GUN AMMUNITION. Gun ammunition includes projectiles, fixed ammunition, and artillery ammunition.

10-7.4.1. Projectiles.

a. Loaded projectiles, whether unpacked, crated, palletized, or packed, shall be handled, transported, and sorted in a manner so as to avoid damage to rotating bands, bourrelets, points, caps, windshields, covers, fuze threads, painting, and identification markings.

b. When rolling is the only means available for moving loaded projectiles, they shall be rolled carefully and slowly. They shall be prevented from bumping one another in order to protect the projectile bodies from damage and defacement and to guard against arming the fuze assembled in the projectile. Projectiles shall not be rolled on the ground, on concrete floors, or on steel decks, but may be rolled over boards at least 1-inch thick or on other approved decking material.

c. Whenever an explosive loaded projectile with or without a fuze is dropped 5 feet or more, it shall be considered defective. Defective projectiles shall be segregated and reported to the program manager for disposition instructions. Whenever an explosive loaded projectile without a fuze is dropped less than 5 feet, it shall be examined to determine exterior damage prior to issue. If exterior damage has occurred, the projectiles shall be segregated and reported to the program manager for disposition instructions.

d. Projectile handling slings that place part of the weight of the projectile on the cap or windshield shall not be used on armor-piercing projectiles.

e. Rocket assisted projectiles (RAP) shall be handled with particular care at all times to avoid dropping or jarring. Any RAP dropped from a height of 24 inches shall be considered defective and shall be segregated and reported to an authorized ordnance disposal personnel for disposition.

10-7.4.2. Fixed Ammunition. Each round of fixed ammunition is carefully gauged prior to its assembly and issue to ensure that it fits into the gun for which it is designed. This ammunition is particularly susceptible to misalignment of its projectile and cartridge case or to other deformations that causes jams in loading.

a. Fixed ammunition shall never be dropped, rolled, or thrown. Boxes or tanks of fixed ammunition may be handled with roller conveyors, chutes, or trucks if protected against shock or damage.

b. Whenever a round of fixed ammunition, even if tanked or boxed, is dropped 5 feet or more, it shall be moved to a safe location and broken down. If the projectile is loaded and fuzed, it shall be moved to a safe location and unfuzed. The fuze shall be reported to the program manager for disposition instructions. The primer shall be disposed of by burning or firing as described in applicable instructions. Other components resulting from the breakdown shall be handled in accordance with appropriate rework instructions. Activities that do not have facilities or authorization to comply with this procedure shall immediately report damaged rounds to the program manager for disposition instructions.

10-7.4.3. Artillery.

a. The moisture resistant seals on the containers shall not be broken until the ammunition is to be used or inspected.

b. The ammunition, particularly the fuzes, shall be protected from high temperatures and from the direct sunlight.

c. No attempt shall be made to disassemble any fuze, round, or component of artillery ammunition unless specifically authorized by applicable Army publications or by the program manager.

d. The safe handling practices specified for Navy ammunition also shall be applied to artillery ammunition.

10-7.5. SMALL-ARMS AMMUNITION.

a. Small-arms ammunition boxes shall not be opened until the ammunition is to be used or inspected.

b. Small-arms ammunition shall be protected from moisture, heat, dirt, and against blows or shock that might dent it or fire the primer. Small-arms ammunition shall not be placed haphazardly in a container allowing the projectile of one round to strike the primer of another.

c. Small-arms ammunition shall not be exposed to direct sunlight for any considerable length of time.

d. Cartridges shall not be polished, although they should be wiped free of corrosion, moisture, or dirt.

10-7.6. BOMB-TYPE AMMUNITION. Evidence shows that it is possible to detonate bomb-type ammunition, particularly items with container walls of 1/16 to 1/8-inch thickness, by impacts that dent, but do not rupture the container walls.

a. Bomb-type ammunition shall never be dropped, dragged, tumbled, walked, or otherwise subjected to shock. Chutes shall not be used in loading or unloading operations.

b. Nets shall not be used except to enclose a pallet, skipboard, or tray.

c. Rolling is prohibited.

d. Containerized Joint Direct Attack Munition (JDAM) Guidance Sets dropped in excess of 18 inches and/or uncontainerized guidance sets dropped from any distance shall be considered unserviceable.

10-7.7. ROCKET-TYPE AMMUNITION. Rocket-type ammunition includes guided missiles, rockets, and Jet-Assisted Take-Off (JATO) units.

10-7.7.1. Guided Missiles. Even though most guided missile rocket motor shipping containers are designed to protect against shock, RF radiation, moisture, temperature extremes, and high humidity, care is necessary when handling guided missiles. Likewise, the special handling equipment specified for the missile shall be used.

10-7.7.1.1. Procedures listed in NAVSEA SW394-EE-PRO-010 shall be used during dockside handling of VLS canisters. The safe working load (SWL) requirements described in NAVSEA SW394-EE-PRO-010 apply for specific VLS ordnance handling equipment.

10-7.7.2. Rockets and JATOs. Rockets/JATOs are designed to be as safe during handling as is consistent with their function. They are packed to withstand all the usual conditions that they will encounter during storage and transit. In order to ensure that the ammunition will be in serviceable condition when it is used and to provide the highest possible protection to personnel and material, the following precautions shall be observed:

a. Rockets/JATOs shall be protected from sources of high temperatures like steam lines and direct sunlight.

b. Since explosives are adversely affected by moisture, the moisture resistant seal on the container shall not be broken until the items are to be used or inspected. Rockets/JATOs removed from the containers, particularly in warm, damp climates, are subject to accelerated corrosion and deterioration that may render them unserviceable.

c. Rockets/JATOs and components that are issued separately shall not be assembled prior to use except for those that need to be ready for immediate service. Rockets/JATOs assembled for use, but not used shall be returned to their original condition and packages.

d. Safety devices shall not be removed nor shall the items be altered in any way.

e. Damaged containers shall be repaired or replaced.

f. Rocket motors/JATOs shall not be dropped or handled roughly. Although there is little possibility of a motor firing as the result of falling or rough handling, this treatment is likely to fracture the propellant grain resulting in the motor blowing up on ignition, or to damage the igniter so that the motor will not function properly.

g. Care shall be taken to prevent bending or deforming the rocket motor/JATOs in any way.

h. The propellant grain shall not be removed from the rocket motor/JATOs except in reworking operations.

10-7.8. EXPLOSIVE INITIATING DEVICES, BOOSTERS, AND TRACERS. The following safety precautions shall be observed when handling fuzes, tracers, primers, boosters, and detonators.

a. Fuzes, tracers, primers, boosters, and detonators are loaded with explosives that are sensitive to shock and friction. These components are supported in trays or racks to protect them against shock.

b. Component containers should be kept in the same airtight, sealed condition in which they are packed and should be exposed to the atmosphere for minimum periods of time.

c. Whenever a fuze, primer, or detonator, or a box containing fuzes, primers, or detonators is dropped from a height of 5 feet or more, the item dropped shall not be used or issued for use, but shall be segregated and the circumstances shall be reported to the program manager with disposition instructions requested.

d. To ensure the proper functioning of primers, whether they are separate or in loaded ammunition, they shall be handled gently and never dropped, jolted, or exposed to unfavorable storage conditions. Primers in boxes or in ammunition should be kept cool, dry, and in airtight containers.

e. Detonators are sensitive to shock.

f. Tracers shall be protected from dampness and rough handling.

10-7.9. GRENADES. Grenades are subject to accidental functioning from rough handling. The firing device is especially vulnerable to deterioration. Care is required to ensure that safety pins are in place before handling.

10-7.10. ANTITANK-TYPE MINES. The handling provisions specified for bomb-type ammunition in paragraph 10-7.6 also apply to antitank land mines.

10-7.11. MORTAR AMMUNITION.

a. Hazards. Mortar ammunition is considered an unusual hazard since rough handling can arm or break the fuze and explode the bursting charge. Otherwise, it presents the same hazards as Navy fixed ammunition or bomb-type ammunition, depending on its caliber. Light mortar ammunition up through 81 mm but, excluding 81 mm M56, presents the same hazards as Navy fixed ammunition and small caliber projectiles that are loaded with high explosive. See paragraph 10-7.4.1 and 10-7.4.2 for hazards involved with loaded projectiles and fixed ammunition. Heavy mortar ammunition that is larger than 81 mm (but including 81 mm M56) presents the same hazards as bomb-type ammunition as described in paragraph 10-7.6.

b. Safety Precautions.

(1) The moisture-resistant seal on fiber containers shall not be broken until the ammunition is to be used or inspected.

(2) The safety wire shall only be withdrawn from the fuze just before firing and at no other time.

10-7.12. GROUND-TYPE ROCKETS. The safety precautions specified for handling rockets in paragraph 10-7.7.2 also apply to ground-type rockets.

10-7.13. PYROTECHNICS.

10-7.13.1. Safety Precautions.

a. Pyrotechnics shall be protected against moisture, dirt, high temperature, direct sunlight, corrosion, shocks, friction, and if required, RF radiation.

b. The moisture proof seals shall not be broken until just before the item is to be used, inspected, or tested.

c. Protective or safety devices shall not be removed until just before the item is used or tested.

d. Pyrotechnics, especially the types that are projected, should be handled to avoid denting or deforming their cases. Pyrotechnics that are seriously dented or deformed shall not be used.

10-7.13.2. Illuminating Compound. If any illuminating compound is spilled, all work in the vicinity shall be stopped until the loose powder is picked up and the residue is washed away with water. The spilled powder should be packed up by touching the powder gently with a wet cloth. The powder adhering to the cloth should be rinsed off beneath the surface of water in a bucket. The process should be repeated until the powder is removed. The explosive properties of any possible residue should then be destroyed by washing the spot with liberal quantities of water. Water shall not be used on large amounts of the powder, but only on amounts that remain after spilled powder has been taken up with a wet cloth. If it is necessary to protect spilled illuminating compound temporarily, it should be covered with talcum, chalk, or a similar inert, nonabrasive powder.

10-7.13.3. Photoflash Cartridges. Photoflash cartridges must be handled with the same care as black powder and with even greater care than customary for pyrotechnic materials and conventional bombs. No hammering or cutting shall be done on the cases. Handling shall prevent damage to the containers or to the parachute pull cords.

10-7.14. DEMOLITION AND MISCELLANEOUS EXPLOSIVES AND AMMUNITION ITEMS.

10-7.14.1. Electric and Nonelectric Blasting Caps.

a. Containers of blasting caps shall not be left uncovered.

b. Blasting caps shall not be disassembled.

c. Refer to NAVSEA SW060-AA-MMA-010 for safety regulations that apply to the handling of blasting caps during demolition operations.

10-7.14.2. Safety Fuse.

a. Safety fuse shall be kept away from extreme heat to prevent damage and malfunctioning.

b. Cold weather causes fuses to become stiff and break easily.

c. Avoid kinks in safety fuse.

10-7.14.3. Commercial Dynamite, Blasting Agents, and Gels. Commercial dynamite, blasting agents and gels, including water gels, are explosives obtained from commercial sources. Their sensitivity and keeping qualities are usually different than those of standard military explosives. Commercial dynamite is considered more hazardous in storage than other high explosives because it may exude nitroglycerine, that is a greater fire and explosion hazard than other types of exudate, and commercial dynamite deteriorates more rapidly than other high explosives, with possible exception of water gels. Therefore, it is Navy policy not to permit storage of large quantities of blasting agents, gels, and especially commercial dynamite at Navy and Marine Corps activities that handle ammunition or explosives except with specific approval of NOSSA in each instance. Approval will usually be granted only in cases of necessity or emergency in specified quantities for minimum periods of time and only where adequate storage facilities are available. For purposes of validation, a report shall be made to NOSSA each year, listing by type and quantity, commercial dynamite, blasting agents, and gels actually on hand as of 31 December and giving estimated storage requirements for each for the coming year. In the event that a request is made by a commercial concern or activity to store commercial dynamite, blasting agents, or gels at an ammunition handling or storage activity, the procedures defined in paragraph 2-1.4.11 of this manual must be followed.

10-7.14.4. Military Dynamite. Although military dynamite is relatively insensitive to shock and fairly safe to handle, it is a high explosive and should be protected from high temperatures and from severe drops and jolts.

10-7.14.5. Impulse and Blank Ammunition. The handling specified for black powder in paragraph 10-7.1.1 also applies to impulse and blank ammunition prepared with black powder, and saluting ammunition. Torpedo impulse cartridges and the black powder used in them shall be kept absolutely airtight and dry.

10-7.14.6. Aircrew Escape Propulsion Systems (AEPS), Cartridge Actuated Devices (CAD), and Aircraft Stores Release Cartridges. AEPS, CADs, and aircraft stores release cartridges shall be protected from electromagnetic radiation as described in NAVSEA OP 3565/NAVAIR 16-1-529, moisture, high temperature, and direct sunlight. Safety mechanisms such as safety pins and devices shall not be removed or tampered with in any way except when it is necessary for operational use. AEPS, CADs and aircraft stores release cartridges shall not be considered inert until inspected and certified as such. Detailed instructions for their inspection, handling, and use are contained in NAVAIR 11-85-1, NAVAIR 11-100.1.1, and NAVAIR 11-100-1.3. Disposition instructions are contained in OPNAVINST 8600.2 (series) and NAVSUP P-724 (series). Refer to chapter 13 for specific requirements for the disposal of these devices.

a. Misfired AEPS/CADs. Any AEPS or CADs that fail to fire after initiating action is taken shall be considered as live ordnance and removed and dispositioned in accordance with approved written operating procedures, by explosive ordnance disposal personnel.

b. Fired AEPS/CADs. Any AEPS that have been fired shall be handled as live ordnance because residual explosives are still present. Fired AEPS shall be removed in accordance with approved written operating procedures. Fired aircraft stores release cartridges shall be inspected and dispositioned as described in paragraph 13-14.2. All other fired CADs shall be inspected and dispositioned in accordance with approved written operating procedures.

10-7.14.7. Torpedoes. Torpedo control surfaces, fins, rudders, etc. and torpedo mounted dispensers shall not be used as a means controlling stability during handling. Tag lines and handling bands must be used around the body of the torpedo without contacting the aforementioned torpedo components.

10-7.15. INERT AMMUNITION COMPONENTS. Inert ammunition used for training purposes shall receive the same care and attention during handling, including use of approved handling equipment, as is given to service or live ammunition. Fuze hole threads, rotating bands, fin stabilizers, projectile caps, windshields, and similar inert ammunition components shall be protected against damage. All fuze holes or similar cavities shall be closed with approved plugs or closures to protect the fuze-hole threads and cavities unless the ammunition or components are boxed, palletized, or specifically exempted by NOSSA . Precautions shall be taken to avoid defacing or marring of identification markings.

THIS PAGE INTENTIONALLY BLANK

CHAPTER 11
STORAGE

11-1. GENERAL.

This chapter organizes storage of ammunition and explosives into three subsections: general storage regulations, specific storage regulations, and inspection and evaluation policies. Also included in this chapter are requirements specific to the storage of waste military munitions (WMM). The designation of an item as a WMM does not exempt the item from the requirements for the proper storage of ammunition and explosives. It does, however, place additional storage requirements on the item. Types of storage include magazine storage, open storage, and temporary storage.

11-1.1. NOSSA COGNIZANCE. The safe storage of ammunition and explosives at Department of the Navy (DON) shore activities, including tenant activities (Coast Guard, Federal Bureau of Investigation, etc.) regardless of ammunition and explosives ownership, as well as DON ammunition and explosives stored at other locations, is under the cognizance of Naval Ordnance Safety and Security Activity (NOSSA) as delegated by Naval Sea Systems Command (NAVSEASYSCOM). Storage shall conform to the regulations stated in this publication as well as to the occupational safety and health standards promulgated by the DON and applicable federal, state, and local regulations.

11-1.1.1. Storage Authorization. All DON shore activities shall store only ammunition and explosives for which there is a clear audit trail and reason for storage at the activity. DON shore activities shall not store any ammunition and explosives that is in excess to their ammunition storage allowance or to their research, development, testing, or manufacturing needs, unless specifically directed to do so, in writing, by the inventory control points or by the Designated Disposition Authority (DDA) as described in DODM 4715.26, DoD Military Munitions Rule (MR) Implementation Procedures. The intent is for each activity to identify and monitor the status of ammunition and explosives classified by the local commanding officer as being in excess of the needs of the activity. For ammunition and explosives which are not required by the activity to meet its mission requirements, the host activity, commanding officer, or magazine owner must obtain early disposition instructions on this excess ammunition and explosives. On an annual basis, the shore activity shall contact the following inventory control points for disposition instructions for any ammunition and explosives in excess to the needs of the activity.

a. Navy – Naval Supply Systems Command, Naval Operational Logistics Support Center (NOLSC)

b. Marine Corps - Marine Corps Systems Command (MARCORPSYSCOM) (PM - AMMO)

c. Non-in-service ammunition and explosives – Acquisition Program Manager.

11-1.2. HAZARDS OF LONG TERM STORAGE. Ammunition and explosives may deteriorate in storage. The method of packaging, magazine environment, the length of time the material is stored, the nature of the deterioration, and the explosive compositions used are factors in the rate and criticality of the deterioration. Any deterioration which decreases the stability of the material, thereby increasing the risk of auto-ignition or a handling mishap, creates a safety hazard. The longer that material is retained in storage, the greater the likelihood that deterioration will occur; therefore, activities shall

assure that inventory management programs identify and prioritize older stocks of ammunition and explosives for issue or use.

11-1.3. STORAGE OF WASTE MILITARY MUNITIONS (AMMUNITION AND EXPLOSIVES). The commanding officer of every shore activity shall ensure that:

11-1.3.1. The appropriate Federal or State environmental regulatory authority is notified of the location of any storage facility used to store waste military munitions (WMM) within 90 days of the date the unit was first used to store WMM under the authority of Conditional Exemption (CE).

11-1.3.2. Each magazine storing WMM or explosives under CE must be included in a DWESO approved explosives safety site plan that the installation keeps on file. Magazine previously sited do not need to be resited when they are used for the storage of WMM. Those portions of the site plan addressing magazines storing WMM under CE shall be made available to the appropriate Federal or State environmental regulatory authority upon request.

11-1.4. AMMUNITION AND EXPLOSIVES IN STORAGE. Ammunition or ammunition components shall not be stored outside of their shipping containers with exception of the following situations:

a. Storage requirements for specific types of ammunition as defined in paragraph 11-8.

b. Storage of items in-process (that is, manufacturing or testing) specifically including material at activities listed in table F-1. Such storage must give consideration to physical protection of the ammunition or explosives item and its stability, respective of the time stored.

c. Ammunition that is configured for ready issue (that is, aircraft ordnance or security ammunition).

d. Torpedoes and encapsulated/encanistered TOMAHAWK missiles stored on specifically-designed chocks (support systems) to prevent inadvertent movement or contact with each other.

e. Large rocket or missile motors that are not transported in shipping containers.

f. Missile components for which the Directing Reporting Program Manager (DRPM) or Program Manager (PM) has authorized in writing.

g. Ammunition components intended for further issuing or assembling into all-up-rounds which have been removed from approved shipping containers and stored in packaging levels no lower than the approved intermediate or unit pack.

11-1.4.2. Ammunition and Explosives Stored in Containers. Containers of ammunition or explosives shall be clean, dry, and properly marked in accordance with MIL-STD-129 (series) before being stored. Open shipping containers or containers with covers insecurely fastened shall not be allowed in magazines. Containers of ammunition or explosives shall not be opened or repaired in a magazine except as described in paragraphs 9-4.1 and 11-3.1. Damaged containers should be repaired prior to storage in a magazine. If the container is damaged to the extent that safe storage of the contents is compromised, the contents must be transferred to a new or serviceable container.

11-1.5. EMPTY CONTAINER CERTIFICATION. Empty ordnance containers require inspection and must meet the requirements of NAVSUP P-805. Upon receipt, all empty containers, regardless of their origin, must be inspected for markings and seals certifying their empty condition. Containers which do not meet this requirement must be opened, inspected, and marked and sealed to certify their empty

condition unless they are specifically excepted by paragraph 11-1.5.1. At the time of release, shipment, or issue, an inspection must be performed to assure that empty container certification remains valid. In addition any empty containers not being reused for their intended purpose and that are not included within a DoW component's established management system are considered to be Material Potentially Presenting an Explosive Hazard (MPPEH) and must be certified as Material Documented As Safe (MDAS) in accordance with paragraph 13-15 and managed appropriately. A Supply Discrepancy Report (SDR) shall be submitted in accordance with NAVSUP P-724 for Navy activities or MCO 4400.201-V7 (series) for Marine Corps activities to report a container received as empty by an activity, but found to contain live ammunition or explosives during inspection. Refer to NAVSUP P-724 for Navy activities or MCO 4400.201-V7 (series) for the accounting of recovered material.

11-1.5.1. Exceptions to the requirement for inspection, marking and sealing of empty containers are addressed in subparagraphs a. through d.

a. All new, reworked or refurbished empty containers received from a manufacturer/ contractor or provided as Government Furnished Material (GFM) for the purpose of RDT&E do not require marking or attachment of traceable seals until the containers are physically shipped from the PHST Center. This exemption does not apply to fleet return containers.

b. All new, reworked, or refurbished empty palletized containers received from a manufacturer/contractor for the purpose of RDT&E or to support subsequent container marking/ packaging requirements, do not require pallet break down for inspection, empty marking application and sealing of the individual containers. The pallet configuration will be labeled empty upon receipt. Empty labels will be applied on all four sides of the pallet configuration. A material condition tag or 2DBC with all required blocks completed reflecting type, quantity, and condition of empty containers must be attached to the pallet. As containers are removed from the pallet, the material condition tag or 2DBC must be updated to reflect accurate information. For all new, reworked, or refurbished empty individual or unitized containers received from a manufacturer/contractor or provided as GFM, empty labels and material condition tags or 2DBC labels will be applied upon receipt. This exemption does not apply to fleet return containers. Prior to off-station shipment, all empty containers must comply with paragraph 11-1.5 requirements.

c. Empty containers that remain in a facility, or its immediate external storage area, that are inventory-controlled by the facility and are intended for re-use do not require empty identification; however, these empty containers shall be segregated so as not to be confused with loaded containers. This exception only applies to containers intended to be reused after completion of weapons/container maintenance, or containers retained for re-containerization of captive carry items, containers to support ship offloads, or similar applications. Empty containers which remain after asset expenditure or containers held pending disposition are not excepted from the empty container marking requirement. All empty containers shipped from the facility shall be identified and certified empty in accordance with paragraph 11-1.5.

d. Empty containers that are included in a unit load containing ammunition and explosives require marking as required in paragraph 11-1.5.2. The empty containers must be conspicuously placed in the unit load and the number of empty containers shall be identified near the pallet identification markings as indicated in paragraph 11-2.6.4.

11-1.5.2. Marking and Sealing Empty Containers. Empty hazardous materials containers must be marked as empty, sealed with traceable seals, and have a properly certified material condition tag/label or an ammunition packaging label two dimensional barcode attached, identifying an empty container. To comply with MIL-STD-129 (series), all contents markings indicating the presence of hazardous

materials such as loading dates, lot numbers, serial numbers, maintenance due dates (MDD), and Department of Transportation (DOT) markings/labels, etc. must be removed/obliterated.

NOTE

Serviceable, emptied containers are intended for re-use. To prevent increased maintenance costs, stenciling shall be accomplished neatly and in a reasonable size. Avoid stenciling or marking over permanent markings. Also, take care to ensure permanent markings are not removed/obliterated.

Empty markings must be applied by any one of the following methods:

a. Stencil EMPTY in approximately 1-inch high letters on both ends and both sides of the container.

b. Apply an EMPTY label on both ends and both sides of the container. Adhesive-backed EMPTY labels may be locally procured or manufactured. The label shall have 1 inch-high black lettering on a white vinyl background. The recommended label dimension is 6 x 6 inches (15.2 x 15.2 cm) for purposes of visibility. However, variations in label dimensions are permitted to support use of standard size label materials with commercial label printers and for containers which are too small for 6 x 6 inch labels.

c. Annotate EMPTY on the container as required in the container-specific section of NAVSUP P-805.

d. For localized control in addition to the markings required in sub-paragraphs a, b, and c above, fluorescent red tape may be used to indicate an empty weapon container. A durable, colorfast material such as Scotchguard Herculite is suited for such application. This method involves positioning a ribbon across the center of an open container with approximately twelve inches extending past each side when the lid is replaced. See figure 11-1 for an example of how the red ribbon may be used. Any container which is not marked "EMPTY" as described above, or which does not display a red ribbon, would be treated as containing a weapon. Use of red ribbons is intended for localized control only and shall be in conjunction with one of the marking methods described in a, b, and c above prior to shipment.

e. Marine Corps activities issuing excess empty containers to Defense Logistics Agency Disposition Service for disposal must comply with the certification and preparation requirements of MCO 5100.29 Volume 8 (series).

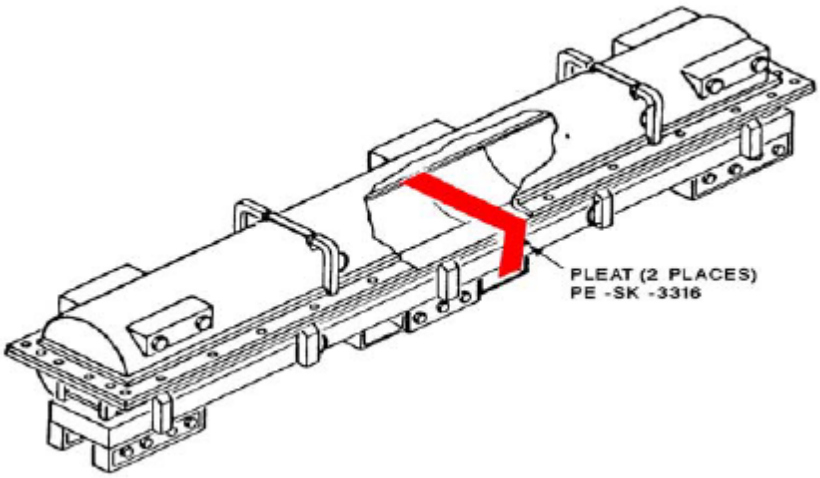

Figure 11-1. Use of Red Ribbon to Indicate an Empty Container

11-1.5.3. Shipments of Empty Containers. All containers that previously were used for ammunition, weapons, explosives, or other hazardous materials shall be subjected to a 100% inspection in accordance with NAVSUP P-805 prior to shipment to other DON or DoW component activities for storage, reuse, or salvage. This inspection is to ensure that the containers have markings and seals certifying their empty condition. Any containers that do not meet these requirements must be opened, inspected, and marked and sealed to certify their empty condition. In addition, any empty containers not being reused for their intended purpose and included within a DoW component's established management system are considered to be MPPEH and must be certified as MDAS in accordance with paragraph 13-15 and managed appropriately.

11-1.6. AMMUNITION AND EXPLOSIVES INSPECTION. Ammunition and explosives in storage shall be inspected in accordance with NAVSUP P-805. Waste military munitions are not excluded from the requirements of NAVSUP P-805.

11-2. MAGAZINE STORAGE REGULATIONS.

Storage of ammunition and explosives in magazines shall comply with the following regulations.

11-2.1. MAGAZINE ASSIGNMENT. The type and amount of material that may be stored in any magazine are dependent upon explosives safety quantity-distance (ESQD) requirements described in chapter 7, and the storage compatibility requirements described in this paragraph and chapter 3. Authorization to designate any facility as a magazine for ammunition and explosives storage must be obtained through the site approval process defined in paragraph 8-1.2.

11-2.2. STORAGE PRINCIPLES. The following principles shall be observed in storing ammunition and explosives.

a. Increased safety in ammunition and explosives storage could be attained if each item or division were stored separately. However, this ideal storage generally is not feasible. A proper balance of safety and other factors frequently requires mixing of several types of ammunition and explosives in storage.

b. Ammunition and explosives may not be stored together with dissimilar materials or items that present hazards to the munitions. Examples are mixed storage of ammunition and explosives with flammable or combustible materials, acids, or corrosives.

c. Different types of ammunition and explosives designated by item and division may be mixed in storage provided they are compatible. Ammunition and explosives are assigned to a storage compatibility group (SCG) when they can be stored together without increasing significantly either the probability of an accident, or for a given quantity, the magnitude of the effects of an accident. Considerations contributing to SCGs include, but are not limited to:

(1) Chemical and physical properties.

(2) Design characteristics.

(3) Inner and outer packing configurations.

(4) Rate of deterioration.

(5) Sensitivity to initiation.

(6) Effects of deflagration, explosion, or detonation.

d. Subject to application of these standards, particularly in reference to compatibility as defined within this manual, ammunition and explosives may be mixed in storage when mixing will not result in unsafe operations and will promote overall storage efficiency. Assignment of items to SCGs that require separate storage shall be minimized as consistent with actual hazards presented and the end use; and shall not be based on administrative considerations.

e. As defined in this manual, the phrase “with its own means of initiation” indicates that ammunition has its normal initiating device attached to it, and this device may present a significant risk during storage. However, the phrase does not apply when the initiating device is packaged in a manner that eliminates the risk of detonation of the ammunition in the event of accidental functioning of the initiating device, or when fuzed end items are so configured and packaged that arming of the fuzed end items is prevented. The initiating device may be assembled to the ammunition provided its safety features preclude initiation or detonation of the explosives filler of the end item in the event that accidental functioning of the initiating device occurs.

f. Mixed storage of experimental energetic materials shall meet the requirements of appendix F, paragraph F-10.13.1.

g. Activities shall not store any inert (non-explosive ordnance or non-hazardous material in accordance with DOT Hazard Class/Division assignments) items in a magazine with or without explosives unless the inert items are components of, or directly support the use/storage of explosive material, and are specifically identified in the Standard Operating Procedure (SOP). Activities shall take into account and ensure that the following concerns are addressed before modifying SOPs, as the practice of mixed storage has the potential to: place unique/valuable inert items at risk from an explosives incident; violate ESQD siting requirements by exposing non-ordnance related personnel to explosives hazards; establish operations siting requirements by exposing non-ordnance related personnel to explosives hazards; establish operations exceeding storage and the limited provisions of paragraph 11-3.1; and cause overloading and incompatible stowage in magazines through misuse of limited explosives storage capacity.

h. WMM and non-waste military munitions may be stored in the same magazine. They must be physically separated (for example, on a separate pallet or shelf, etc.). The WMM must be clearly marked to ensure proper identification. Each individual item does not need to be marked if the segregated WMM can be identified as waste by means of a placard in combination with boundary marking such as rope or barriers.

11-2.2.2. Compatible Ammunition and Explosives. The separation of ammunition and explosives hazard Class 1 into the several divisions does not necessarily mean that the different items in a division may be stored together. In addition, some items may appear in more than one division depending on factors or combinations such as the degree of confinement or separation, the type of packaging, storage configuration, or state of assembly.

11-2.2.2.1. Hazardous Ordnance and Energetic Material Storage. Ordnance and energetic materials that have or may have become unstable or have other discrepancies that increase the risks of storage beyond those normally associated with the material require special safety precautions and shall be stored as follows:

a. Unstable Material. Unstable material shall be disposed of immediately, if possible, or within the time parameters specified by a Notice of Ammunition Reclassification (NAR) for stock material. Disposition of non-service ammunition will be under local procedures based on the last available technical data. Unstable material includes material with depleted stabilizer, misfired ordnance, non-Department of War (DoW) devices rendered safe by explosive ordnance disposal and some items listed in NAVSUP P-801. Fleet and field activities will be notified by a NAR message when inspection and evaluation determines that stock material is deteriorating and stabilizer is depleting. If the material must be stored pending disposal, it is incompatible with all other material and shall be stored in a magazine separate from all other material. The material must be managed as a WMM. This will require storage in a magazine compliant with the requirements for Conditional Exemption for the storage of WMM or in Resource Conservation and Recovery Act (RCRA) permitted/interim status storage or in a RCRA less than 90-day accumulation site. If magazine space is not or cannot be made available to separately store all unstable material, then more than one type of unstable material may be placed in the same magazine. Activities shall make every effort to expedite the disposal of this material and minimize the amount of this material in any one magazine. When more than one type of unstable material must be stored in a magazine, internal magazine separation shall be maximized and additional precautions such as sand bags shall be used to minimize the risk of internal propagation between items. Marine Corps assets reclassified by a NAR will be managed in accordance with the Marine Corps Designated Disposition Authority (DDA) process.

b. Material with Stabilizer Depletion at an Unacceptable Rate. Material with stabilizer depletion at an unacceptable rate shall be disposed of within the time perimeters specified by the NAR. Disposition of non-service ammunition will be under local procedures based on the best available technical data. If the material must be stored pending disposal, it is incompatible with all other material except other material with stabilizer depleting at an unacceptable rate. This material shall be stored in a magazine separate from any serviceable material. The material must be managed as a WMM. This will require storage in a magazine compliant with the requirements for Conditional Exemption for the storage of WMM or in RCRA permitted/interim status storage or in a RCRA less than 90-day accumulation site. Activities shall make every effort to expedite the disposal of this material and minimize the amount of this material in any one magazine. When more than one type of this material must be stored in a magazine, internal magazine separation shall be maximized and additional precautions such as sand bags shall be used to minimize the risks of internal propagation between items. If the material is not disposed of by the required date, it shall be considered unstable material with depleted stabilizer and the requirements for that material apply. NAVSUP P-801 lists material in this category. Marine Corps

assets reclassified by a NAR will be managed in accordance with the Marine Corps Designated Disposition Authority (DDA) process.

c. Material with Unknown Stability. Material with unknown stability shall be treated, as a minimum, the same as material that has stabilizer depleting at an unacceptable rate. The type of material, the nature and extent of the deficiency and other factors may require that the material with unknown stability be treated as unstable. Examples of material to be treated as unstable may include non-stock material, dropped or damaged material, material in substandard packaging, unidentified material and material that has not been receipt inspected.

11-2.2.2.2. Permissible Storage. Ammunition and explosives are grouped for storage compatibility as specified in table 3-10 of this manual and Table 2-7 of NAVSEA SW020-AC-SAF-010. The compatibility requirements in these tables including acceptable deviations authorized by NOSSA as specified in the notes on these tables, shall be observed when determining permissible storage for ammunition and explosives. However, deviations from storage compatibility requirements for other items except compatibility groups A, K and L or materials in a magazine are authorized provided the total explosives content, or Net Explosive Weight (NEW) of items or materials stored together in that magazine, does not exceed 1,000 pounds.

a. Stable explosive hazardous waste (EHW) may be stored with other stable ordnance end items or stable bulk material being retained, but shall be segregated to a readily identifiable area within the ordnance storage magazine. Refer to paragraph 13-1.1 for EHW disposal requirements.

b. Unstable materials, listed in paragraph 11-2.2.2.1.a through 11-2.2.2.1.c are categorized as C, G and L, and may be stored with other unstable material as defined in these paragraphs.

11-2.2.2.3. Mixed Storage. Ammunition and explosives of different compatibility groups may be mixed in storage only as indicated in table 3-10 and NAVSEA SW020-AC-SAF-010, Table 2-8. At locations that are designated by NOSSA, and site approved by the Department of War Explosives Safety Office (DWESO), to store ammunition and explosives packaged for rapid response; for example, Rapid Deployment Force, compatibility groups may be mixed in storage as required to achieve the optimum load needed by the receiving troops. The maximum credible event at any of these storage sites shall be limited to 8,820 pounds NEW. The criteria of paragraph 7-4.2 shall be used for the determination of the NEW at aboveground sites.

11-2.2.3. Explosive Quantity. The maximum amount of explosives permitted in any location is limited by the quantity-distance (Q-D) criteria. Explosives shall be established in amounts no greater than those consistent with safe and efficient operations. The quantity of explosives in any magazine shall not exceed the explosives limits specified by Q-D consideration and/or by magazine capacity. The quantity of WMM stored under the Conditional Exemption cannot exceed the magazine limits; this limit cannot be waived for WMM.

11-2.3. NON-COMPLYING MAGAZINES. Magazines constructed prior to a change in ESQD standards may be used for the balance of their useful life provided the requirements of paragraph 1-2 are met. These magazines cannot be used for the storage of WMM.

11-2.4. MAGAZINE SECURITY. The requirements for magazine security are contained in OPNAVINST 5530.13 (series).

11-2.5. MAGAZINE ENVIRONMENT. Magazine environments shall comply with the following requirements.

11-2.5.1. Temperature Control Considerations. The majority of the ordnance items in the Naval inventory today have been designed to withstand high temperature in the range of 130 to 160 degrees Fahrenheit (°F). Studies have indicated that the temperature within conventional ordnance storage magazines seldom exceeds 105°F. It is no longer necessary to install thermometers and closely monitor the temperatures within magazines except for situations where the program manager for specific ammunition items has established temperature and/or humidity limits.

11-2.5.2. Ventilators. Ceiling or other ventilators shall be maintained in good working order to ensure adequate air circulation. In the event that temperature control is considered necessary within conventional magazines, the magazine doors and ceiling ventilators may be opened to increase air circulation. In this event, effective measures shall be taken to protect the magazine contents against fire and weather. The regulations in paragraph 12-7.5.3 and paragraph 12-7.3.3.a regarding trucks and locomotives passing or approaching an open magazine shall be strictly observed. If ventilating methods do not prove effective in lowering the temperature, the commanding officer shall decide if the magazine contents shall be removed to another magazine, and the unsatisfactory condition of the magazine shall be reported to NOSSA.

11-2.6. MAGAZINE STORAGE LAYOUT. As outlined in OPNAVINST 3500.39 (series), operational risk management should be applied when determining magazine storage layouts. Munitions storage activities should refer to the Magazine Storage Requirements Calculator (MSRC) to define magazine storage requirements based on load plan requirements and to establish safe and efficient storage plans.

11-2.6.1. Determining Factors for Storage Arrangement Within Magazines. The factors which determine the storage arrangement within magazines are as follows:

a. Q-D restrictions.

b. Segregation by lot numbers and ammunition condition codes.

c. Mixed storage by compatibility group.

d. The quantity of material to be stored and the available magazine space.

e. Storage of partial pallet loads.

f. Storage around magazine support columns.

g. Storage of sensitive items.

h. Size of containers.

i. Stack height restrictions.

j. Efficiency in inspection/issuing material.

11-2.6.2. Stacking. The primary requirement is to maintain an orderly arrangement of stable stacks that will facilitate safe and effective handling and storage of ammunition and explosives. Explosives, ammunition, and ammunition components shall be stored in their approved containers except as permitted in paragraph 11-5.1 and stacked within magazines in such a manner as to ensure against toppling or collapse of stack. Criteria for palletizing unit loads of various weapon components are

presented in MIL-STDs -1322 (WR-53), -1323 (WR-54), and -1324 (WR-55). Explosives and ammunition shall be stacked in accordance with the regulations specified in MIL-STDs (WRs) or weapons technical manuals, when available. In addition, the following general stacking requirements apply:

NOTE

As they are updated, both WRs and MIL-STDs will be issued as NAVSEA drawings. See NAVSEA SW020-AC-SAF-010 for unit loading procedures for specific ammunition and explosives.

a. The height of the stacks shall be limited by the weight which the bottom pallet or container can safely support. When such information is available, the maximum stacking height for individual ammunition items is listed in NAVSEA SW020-AC-SAF-010. The bottom layer should be raised off the floor by suitable metal dunnage to provide a ventilating space of at least one-inch between the bottom of the stack and the floor and to protect the material in the stack from water and dampness. The dunnage should be level, and if necessary, shims or wedges should be used. Wooden pallets are acceptable dunnage when they are received as a part of the packaged unit and may remain in the magazine, even when the package is unstrapped and left on the pallet. However, empty wooden pallets shall be removed from the magazine. See paragraph 4-1.26.

b. All grounding shall comply with the instructions contained in chapter 5.

c. Caution shall be used in preventing unstable stacks or crushing of material in lower layers.

d. Stacks shall be arranged so that the individual containers are accessible for inspection and offer no obstacle to the free circulation of air. If necessary, dunnage and shoring shall be used to effectively secure the stacks.

e. Ammunition of the same lot number should be stored in the same magazine, preferably in adjacent stacks. If a lot number is determined to be defective, it can be quickly located to prevent it from being issued for use.

11-2.6.3. Aisles/Clearance. Aisles shall be kept unobstructed so that units in a stack can be inspected, inventoried, and removed as necessary. All magazines shall be loaded leaving sufficiently wide access aisles to permit unhindered movement of materials handling equipment with the minimum necessary shifting of material to reach the desired stores and to prevent obstruction to free circulation of air. A front wall clearance of two feet shall be maintained. A space of at least six inches shall be maintained from stacks to the side and rear walls and to the ceiling of the magazine. Aisles 18 inches wide shall be provided so that individual containers or material stacks are accessible for inspection. This requirement applies to both diagonal and block type storage arrangements. In magazines where storage to physical capacity is permissible, inspection aisles may be eliminated; however, any aisle provided for personnel access must be a minimum of 18 inches wide. In magazines smaller than 1,000 cubic feet, the minimum front wall clearance of two feet and minimum overhead and side clearances of 6 inches may be reduced, providing adequate ventilation can be maintained to prevent damage to containers and deterioration of the materials. Containers/material shall not touch the walls or ceilings.

11-2.6.4. Partially Filled Boxes. When a package contains less ammunition or explosives than the package is designed to contain, the box must be specifically marked as a "LIGHT (or LITE) BOX" in the largest practical letters using a contrasting orange color scheme (for example, black letters on an orange background, or orange letters on a white background) on the tops, sides, and ends of the

container. The marking may be applied using paint/stencil ink or by applying pre-printed tape or labels. Containers identified as light boxes that are in storage and are not marked as specified are acceptable to remain in storage as is, and do not require marking correction until the ammunition is issued or transferred to another activity (either as individual containers or in unit loads). Partially filled boxes, not part of a unit load, shall be closed securely and placed conspicuously on top of the proper stacks within appropriate height limitations. For a unit load containing empty or light boxes, the empty or light box shall be placed in a conspicuous external location; that is, outer edges of the top layer, to improve visibility of the empty/light box markings, including the specific quantity per light box. If this requirement cannot be met, empty or light boxes shall be identified by the quantity per light box and/or the number of empty boxes contained within the unit load. This information shall be shown near the pallet identification markings. The following items are excepted from this marking requirement:

a. Light box marking requirements do not apply to non-standard packs; see NAVSUP P-805.

b. Light box marking requirements do not apply to ammunition containers in magazines containing limited amounts of ammunition in direct support of Research, Development, Test and Evaluation (RDT&E) operations at activities authorized to use the criteria in appendix F of this manual; see NAVSUP P-805.

c. Light box marking requirements do not apply during direct support of an operating line (that is, production or maintenance of ammunition).

d. Light box marking requirements do not apply to containers in ready service magazines. See NAVSUP P-805

11-2.6.5. Inventory Records. Ammunition and explosives inventory records shall be maintained as described in NAVSUP Publication P485 Volume 3 or MCO P4400.151 for items under USMC cognizance. Inventory records for WMM shall be maintained for a minimum of 3 years. These records shall be made available to the appropriate Federal or State environment regulatory authority when requested, and shall consist of the information detailed in paragraph 11-7.3.

11-2.7. PLACARDS. The following requirements for posting placards on all types of magazines (see paragraph 8-2.4) shall be observed. Requirements for posting explosive limits are specified in paragraph 7-4.4.

11-2.7.1. Requirements for posting explosive limits are specified in paragraph 7-4.4.

11-2.7.2. In the vicinity of the above placard, the general safety rules and specific instructions for handling the ammunition and/or explosives contained in the magazine shall be displayed or placed in the magazine area SOPs. Figure 11-2 shows an example of these placards.

11-2.7.3. Requirements for fire division and chemical hazard symbols are provided in paragraph 4-4.2.9. For storage buildings housing other than Class 1 Explosives, hazard identification placards described in NFPA 704 may be used to indicate building contents for firefighting purposes. See paragraph 4-4.2.10.

NAVAL SEA SYSTEMS COMMAND

THESE INSTRUCTIONS ARE NOT ALL INCLUSIVE AND NAVSEA OP 5 MUST BE CONSULTED FOR MORE DETAILED INSTRUCTIONS

SAFETY REGULATIONS FOR HANDLING AND STORAGE OF EXPLOSIVES

GENERAL REGULATIONS

1. Smoking is not permitted in magazines, railroad cars, vehicles or areas containing ammunition, explosives or other dangerous materials.

2. Hot work involving cutting, grinding, welding requires a permit from the local Safety Office.

3. This magazine must be placarded inside the door with permissible storage and explosive limits. The appropriate fire and chemical hazard symbol must be placed outside.

4. Minimize the number of personnel in the vicinity of ammunition/ explosives.

5. Use only approved lights. Contact local Safety Office for determination of approved lights.

6. Ensure proper fire fighting equipment is present and usable before beginning work. Contact Safety Office/Fire Department if unsure what fire fighting equipment should be used.

7. Keep the magazine clean. Do not allow debris, especially oily rags or paint rags, and combustible material in the area. Keep sand and gravel out of the magazine.

8. Only approved material handling equipment can be used. Contact the local Safety Office for guidance. Only qualified and licensed operators are allowed to operate material handling equipment.

9. Do not carry lighter or matches.

10. Do not leave open containers in magazine.

11. Only operations pertaining to storage and shipping are permitted in this magazine.

12. Ammunition and explosives found in unacceptable containers must be removed. Consult requirements and precautions for the specific explosive/ammunition type. Clean up all loose powder immediately while other operations are halted.

13. Stow all materials in accordance with an approved plan and in stable stacks.

14. Store ammunition on metal dunnage to prevent wicking of floor moisture to stored material.

15. Do not leave this magazine open and unattended while it contains ammunition/explosives.

16. Immediately contact your supervisor, local Safety Office or EOD personnel in the event of abnormalities or emergencies.

17. Grounding shall be in accordance with applicable instructions.

18. All magazine workers shall be instructed in static electricity principles before commencing operations.

19. Stack ammunition no less than 6 inches from walls and ceiling and leave a front clearance of 2 feet. Magazines less than 1000 cubic feet - maintain minimum separation for ventilation.

Figure 11-2. Magazine Safety Regulations Placard (Front)

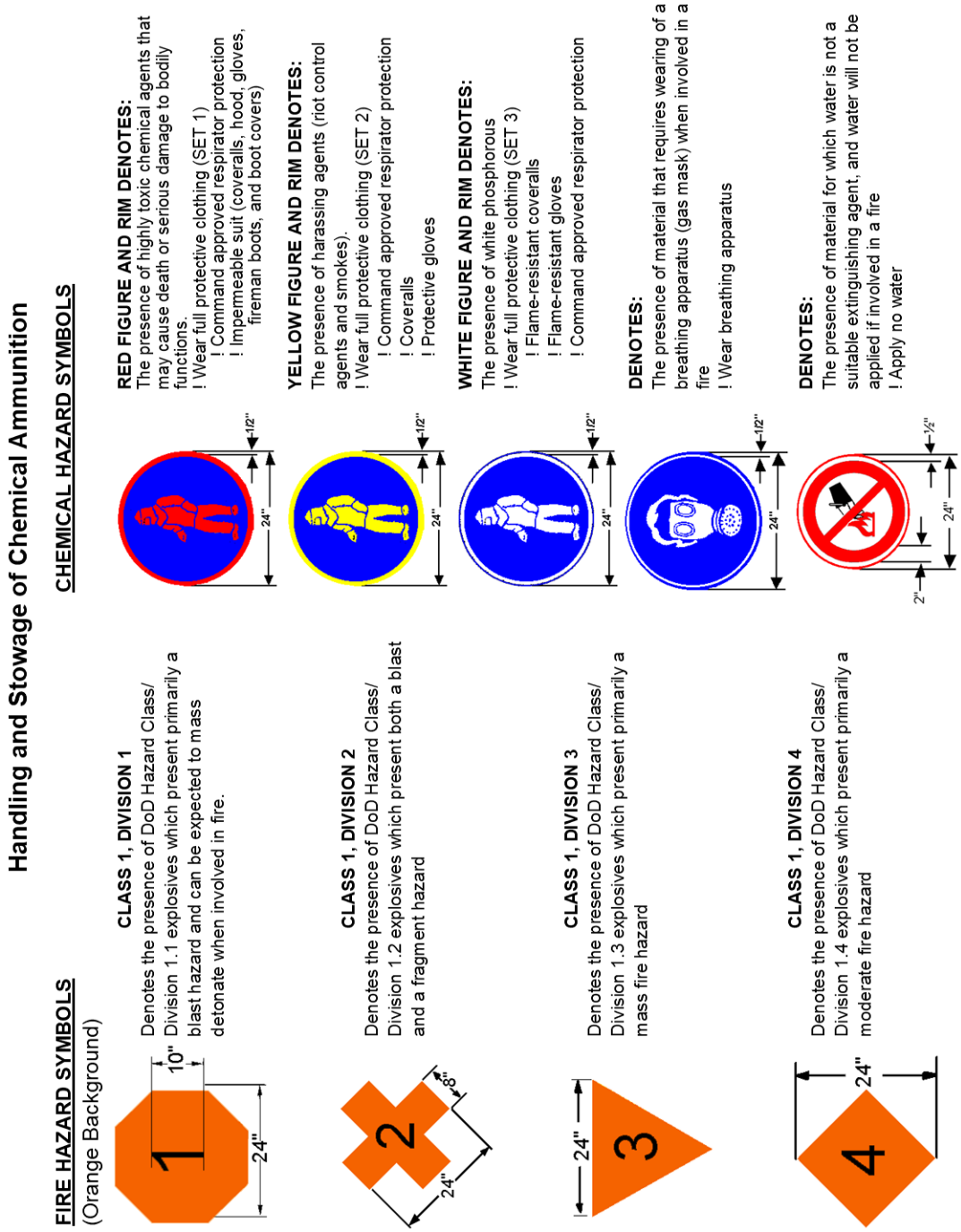

Figure 11-2. Magazine Safety Regulations Placard (Back)

11-2.7.4. Empty signs shall be posted and fire division/chemical hazard symbols removed or covered on a magazine where the hazardous contents that required the placarding have been removed, unless security considerations make it undesirable to identify magazines in a high security area. If empty signs are not posted for this reason, emergency procedures shall be established whereby firefighting agencies will be notified of magazine contents, or lack thereof, in case of fire.

11-2.8. HOUSEKEEPING. The general requirements regarding housekeeping in hazardous locations, presented in paragraphs 2-1.5 and 4-1.7, are applicable to magazine storage. Loose powder, powder dust, or particles of explosive material from broken ammunition or explosives containers shall not be permitted in magazines. In addition, any spilled explosive material shall be cleaned up as soon as possible after it is spilled, and all work shall be suspended until this has been done. The amount of flammable material such as wooden dunnage, pallets, or boxes shall be reduced to an absolute minimum. Empty containers, packing materials, excess dunnage, tools, skids, and other similar material shall not be permitted in a magazine except when they are being used, or as authorized under paragraph 11-2.10.

11-2.9. ELECTRICAL REQUIREMENTS. The regulations for electrical service to magazine storage locations, as well as the requirements for grounding and lightning protection presented in chapters 5 and 6, are applicable to magazine storage.

11-2.10. MATERIAL HANDLING EQUIPMENT STORAGE. Electrical and manual material handling equipment (MHE) and dock plates may be stored in magazines with ammunition and explosives when necessary to protect the equipment from weather conditions. Specific guidance provided in paragraph 5-6 of NAVSEA SW023-AH-WHM-010 must be met.

11-3. MAGAZINE OPERATIONS.

Operations that involve ammunition and explosives are not generally performed in magazines. However, specific operations may be performed in magazines under certain circumstances. The following sub-paragraphs describe the operations permitted and those prohibited. In addition, requirements for magazine exits, exit routes, and red flags during magazine operations are described.

11-3.1. PERMITTED AND PROHIBITED OPERATIONS.

11-3.1.1. Permitted Operations. Permitted operations involving ammunition and explosives are those incidental to storage and shipping operations. All operations shall be in accordance with an approved SOP. Only electrical equipment that is intrinsically safe, self-contained, and has been approved by NOSSA shall be used. These operations include:

a. Palletizing ammunition, bulk propellant, or bulk explosives of any type when each is stored separately in a magazine. This can be done if the operations are directly incident to storage or shipping, and if not more than four persons and two pallet loads are involved in a magazine at one time. Loose or broken metal strappings are not allowed to remain on pallet loads. Metal bands may be cut, if necessary.

b. Replacement of damaged or loose strapping on boxed ammunition. For added precautions, refer to paragraph 10-1.1.

c. Removal of bomb nose and tail plugs by hand for the visual inspection of fuze cavities and fuze cavity liners.

d. Opening weapon containers or cover plates to make desiccant and humidity indicator changes, to conduct visual inspections, to remove and reinstall fins and to perform pressure checks and pressurization or depressurization. Operations shall be limited to one container or weapon at a time.

e. Performance of Permissive Action Link (PAL) operations on nuclear weapon warheads that involve electrical test through containers or access doors providing operations involve a maximum of two units at a time. PAL operations may also be performed on warheads packed in storage containers H1388 and H3703/H3703A by removing container covers.

f. Performance of continuity checks, preset functions, or other electrical tests not involving firing circuits or signals that may arm a device using approved test equipment and SOPs. These tests shall only be performed on completely assembled weapons or all up rounds.

g. Application of rust preventive, paint touch-up, and stenciling operations. Minor removal of rust and corrosion when the ammunition is non-mass detonating, and the operation is done only on the loading platform or in an empty conveyance and outside the magazine and away from the doorway. The use of power tools is not permitted.

h. Unpacking, inspecting and repacking Hazard Class/Division (HC/D) 1.4 ammunition when the magazine is limited to HC/D 1.4 storage only.

i. Issuing limited amounts of packaged material from floor level provided the shipping container in which the item is packaged is closed and secured after the items' removal, and the material removed is inside an inner package. A maximum of four persons and one box can be involved at any time. Neither bulk propellants nor bulk explosives can be issued in this manner. All containers that are less than completely full will be marked with the words “light box” and placed on top of the proper stacks. Exceptions for RDT&E operations are discussed in paragraph 11-2.6.4.

j. Expeditionary exploitation unit personnel, qualified and certified for radiographic operations, may perform radiography of ammunition and explosives (AE) items within earth-covered magazines (ECM) when a dedicated radiographic facility is unavailable and the following conditions are met:

(1) Radiography operations within ECMs must be conducted under the cognizance of the installation explosives safety officer.

(2) Radiography complies with NAVSEA OP 3565 Volume 2 regarding radiation exposure limits on AE.

11-3.1.2. Prohibited Operations. Prohibited operations include:

a. Fuzing or unfuzing projectiles.

b. Boostering or deboostering bombs.

c. Unplugging projectiles or rocket warheads for inspection except by hand and when a cavity liner is present.

d. Soldering, welding, or any other heat-producing operation.

e. Painting or repainting, except as defined in paragraph 11-3.1.1.g.

f. Opening containers or removing cover plates except as indicated in paragraph 11-3.1.1.d.

g. Removing rust or other operations that might cause sparks or fire, or involve flammable or combustible materials.

h. Palletizing in a magazine that has combined storage of bulk propellant, bulk explosives, or ammunition.

i. Performing electrical checks or tests on weapons except as in paragraph 11-3.1.1.f or 11-3.1.1.g.

j. Assembling/disassembling of demolition charges (that is, cutting/sensitizing detonating cord, priming, sensitizing of time fuze or packing shaped charge containers with explosives.

11-3.2. MAGAZINE EXITS. When a single crew of one or more persons is in a magazine, at least one door shall be open. The path of travel from the workplace to the door must be unobstructed. When more than one crew, defined as a unit performing separate functions, is in a magazine, at least one door for each crew, if available, shall be open. Exit routes for crews shall not cross each other. Magazine doors with self-closing latches shall be secured so they cannot swing shut and trap persons inside the magazine. Regulations governing the closing of magazine doors when motor vehicles or locomotives are parked near, approaching, or passing magazines are specified in paragraphs 12-7.5.3 and 12-8.3.3.

11-3.3. RED FLAG. A red flag shall be prominently displayed at the entrance to each magazine area where personnel are working. At the discretion of the commanding officer, a red flag may also be displayed on each magazine where personnel are working. The red flag shall be removed when the personnel leave the area.

11-4. MAGAZINE REPAIRS.

The general regulations specified in paragraph 8-1.2.2 for the maintenance and repair of equipment and buildings shall be observed when repairing magazines. In addition, the requirements of the following paragraphs are applicable to magazine repairs.

11-4.1. HEAT OR SPARK PRODUCING DEVICES. Work requiring soldering, melting of asphalt, or the use of blow torches or other heat or spark producing devices shall be done in accordance with paragraphs 4-1.15, 4-1.16, and 5-10.4.1.

11-4.2. FLOORS. The floors in the immediate vicinity of the repair work shall be swept carefully and any explosive stains shall be removed before repair work is begun.

11-4.3. COMPLETION OF REPAIRS. All magazines where repairs have been completed shall be carefully swept and all tools, excess materials, and waste removed. The magazines shall be inspected by a safety office representative as described in paragraph 11-9 after repair work is completed.

11-5. OPEN STORAGE REGULATIONS.

Open storage is considered undesirable. Even when determined to be necessary, it shall be considered a temporary expedient and shall not be employed in place of magazines for long term storage. Existing regulations concerning Q-D, stacking, dunnaging, identification, and inspection for

aboveground magazines shall apply to open storage areas as well as nonmagazine storage regulations in paragraph 11-6. The following requirements shall also be observed when applicable.

11-5.1. AUTHORIZED STORAGE. Ammunition or explosives open storage sites must meet security regulations and provide protection against deterioration or loss of stability. There are two methods of storage, respective of separation criteria necessary to prevent propagation between stacks of ammunition and explosives.

11-5.1.1. Aboveground Open Storage. Storing stacks of ammunition or explosives in the open requires the use of aboveground, non-earth-covered intermagazine distance from chapter 7 between stacks. This form of open storage has no restriction on the type of material stored, other than the compatibility requirements discussed in paragraph 11-2.2.2 or specific environmental restrictions that exist for particular items of ammunition and explosives.

11-5.1.2. Module Storage. Barricaded storage modules constructed in accordance with the criteria in paragraph 8-2.4.4 provide reduced separation requirements over aboveground intermagazine siting. However, the reduced distance between modules restricts the types of ammunition that can be stored. Items authorized for storage in barricaded open storage modules are limited to high explosive bombs (fuzed or unfuzed, with or without fins) and other similarly-cased HC/D 1.1 ammunition, 30 mm and smaller ammunition in/on non-flammable shipping containers and pallets, Cluster Bomb Units (CBU) in authorized non-flammable shipping containers, inert munitions components, and HC/D 1.4 munitions. Storage of HC/D 1.3 and HC/D 1.2 ammunition is prohibited, with the exception of 30 mm and smaller ammunition. Stocks in each module should be limited to one type of item (that is, bombs, projectiles) in the standard shipping configuration unless mixed storage is authorized by NOSSA. Module storage of ammunition in flammable outer-pack configuration should be minimized. If flammable outer packing is present, it must be covered by fire retardant material.

11-5.2. PLATFORM. The supporting timbers or platform upon which the ammunition or explosives is to be stored shall be constructed to prevent falling, sagging, or shifting. Storage pads should be hard surfaced, to minimize the effects of earth shock from an accidental explosion and shall be provided with lightning protection as described in paragraph 6-8.2.3.2.

11-5.3. PLACEMENT OF MATERIALS. Regulations for stacking ammunition and explosives specified in this chapter shall be observed, depending on the type of material involved. Provisions should be made for free circulation of air through the stacks of material. Combustible dunnage or other flammable material shall not be stored in or within 100 feet of open storage stacks or modules.

11-5.4. USE OF COVERINGS. Stacks of ammunition and explosives should be protected with waterproof coverings to guard against direct exposure to the atmosphere and direct sunlight. Otherwise, deterioration may be accelerated, or excessive rusting of the ammunition may occur. Any covering shall be open on the sides and supported at least 12 inches above the material as well as around its edges to provide air space and allow free circulation of air around the material. Individual items may be covered with a conductive vapor barrier bag conforming to the requirements of MIL-P-81705, Type II in place of the above required waterproof coverings. Individual stacks of ammunition and explosives or cells of barricaded modules may be covered with a light, shed-type metal roof or fire-retardant tarpaulin.

11-5.5. EXPLOSIVES LIMITATION. The maximum NEW permitted to be stored at open storage sites is the same as that listed for magazines in chapter 7 for the respective ammunition or explosive stored.

The limit within each cell of a barricaded open storage module is 250,000 pounds (total of the explosives fill of all HC/D 1.1 or 1.2 ammunition).

11-6. NON-MAGAZINE STORAGE REGULATIONS.

Storage of ammunition and explosives in transportation conveyances and open storage sites shall comply with the following regulations, unless covered under specific storage requirements in chapter 15.

11-6.1. MOTOR VEHICLES, RAILCARS, CONTAINERS AND BARGES. Motor vehicles, railcars, containerized cargo vans (MILVAN) and barges shall not be used as storage facilities for ammunition and explosives. All such conveyances containing ammunition and explosives shall be unloaded as promptly as is practical, not to exceed 90 days from time of arrival on station until it is stored in magazines or until prestaged material is outloaded. Ammunition or explosives placed in lash barges awaiting loading aboard a ship is considered issued, and not subject to the requirements of this paragraph except where noted. In the event these conveyances cannot be unloaded immediately, the following criteria must be applied.

a. Motor vehicles, containers and railcars should be moved to open storage sites such as holding yards or barricaded rail sidings where they will be considered as aboveground magazines and where the appropriate Q-D criteria stipulated in paragraph 7-12.2 and security requirements shall be observed. The application of Q-D criteria is not required while conveyances are held in classification yard for a maximum of 24 hours in accordance with paragraph 8-5.3. While awaiting unloading, storage compatibility requirements as shown in NAVSEA SW020-AC-SAF-010 shall be maintained within conveyances. Maintaining storage compatibility of NAVSEA SW020-AC-SAF-010 between conveyances is desirable but not mandatory.

b. Loaded vehicles and railcars in the process of loading/unloading may be left near or spotted alongside a magazine, operating building, or other Potential Explosion Site (PES) provided that appropriate Q-D criteria are observed; the total NEW of explosives contained in the conveyance together with the NEW contained in the magazine, building or area shall not exceed the explosive limit specified for the PES. Adhere to the detailed requirements of paragraph 12-8.1.4 for motor vehicles and containers as well as railcars.

c. Barges, including lash barges, with ammunition and explosives onboard will be moored at designated mooring locations with proper Q-D separation to other facilities. When the barges must remain at an explosives handling wharf, their NEW will be added to that of other explosives on the wharf and the NEW of any ammunition cargo vessel berthed at the wharf unless proper ship separations as specified in paragraph 7-10.7.1 are met.

d. The environmental controls listed in paragraph 11-6.2 are applicable to all explosive loaded conveyances on station longer than 24 hours including Maritime Prepositioning Force (MPF) cargo.

e. Authorization to extend the 90 day limitation for holding explosive laden conveyances or using an open storage site to 120 days can be granted by the activity commanding officer. Authorization to exceed 120 days must be obtained as an event waiver in accordance with paragraph 1-6.7. Reasons for the extension, actions to mitigate the problem and time period needed must be included in the request.

11-6.2. ENVIRONMENTAL CONTROLS. Ammunition and explosives outside of magazines or environmentally controlled buildings are susceptible to temperatures that can affect their performance

and safe handling. To assure adequate environmental controls the following procedures must be adhered to for any ammunition or explosives which remain outside of magazines or explosive operating buildings longer than 24 hours.

a. Identify all items that have storage temperature limitations listed in the item technical manuals or stenciled on their container and/or on the item itself.

NOTE

Storage temperature limitations will appear in future changes to NAVSEA SW020-AC-SAF-010 as the information becomes available. Some items currently have temperature limits stenciled on their containers or the item itself, and frequently storage temperature limitations are identified in their technical manuals.

b. Based on the type of conveyance, use the adjustment listed in table 11-1 to determine the external temperature at which the item must be considered to be at risk. These adjustments represent the delta between the outside temperature and the internal temperature if the conveyance is in full sun. If the conveyance can be completely shaded from solar exposure a delta of 0 can be used.

EXAMPLE:

Item temperature limitation	130° F
Temperature adjustment - trailers (table 11-1)	-10° F
Adjusted External Temperature Limit	120° F

c. If the Adjusted External Temperature is reached, the program manager must be notified by message, with a copy to NOSSA of the incident with specific reasons why proper storage was not attainable and what procedures are underway to eliminate the problem, including estimated time of correction. A follow-on message is required if the estimated time of correction is not achieved. The subject material will be put in Condition Code J or other code as assigned by the program manager.

Table 11-1. Conveyance Temperature Adjustments*

Conveyance	Temperature Adjustment (°F)
Barge	+8
Boxcar	-8
Trailer/Container	-10
Open Storage	**

NOTES:

*These temperature adjustments are averages based on a limited survey of conveyances and do not compensate for unique construction features, paints or geographic differences. Activities may submit data to NOSSA for review and approval of unique situations that support temperature adjustments that differ from this table.

**Temperature adjustment not available.

11-6.3. EXPLOSIVES OPERATING/ASSEMBLY BUILDINGS. Service magazines or ready-service lockers should be used for the storage of ammunition and explosives instead of storing these items within the operating/assembly building. If necessary, ammunition and explosives items that are components of the same ammunition and explosives product and are part of the work in process within the building may be stored overnight in operating/assembly buildings providing the following requirements are strictly observed:

a. Approved explosive limits are not exceeded.

b. Explosives, or propellant loads of torpedo and missile warheads, mines, rocket motors, projectiles, all-up round torpedoes, missiles, etc. are not exposed. Containers of bulk explosives or propellants are properly and securely covered.

c. Processing equipment, including powder hoppers or pipelines, is empty, unless a risk assessment demonstrates there is no additional hazard generated by leaving explosives on the equipment (that is, overheating, decomposition).

d. The building is equipped with an automatic sprinkler system. Wet pipe or preaction sprinkler systems are required where missile assembly, inspection, or storage is performed. Similar protection shall be provided for torpedo and Advanced Undersea Weapon (AUW) shops. If electronic equipment is present in assembly and inspection areas, preaction sprinkler systems shall be provided. In special cases when commanding officers have determined that an automatic sprinkler system is either not required or that jeopardy to the building contents imposed by the presence of an automatic sprinkler system far exceeds or overshadows the hazards of unattended explosives, these facts with all supporting justification should be forwarded to NOSSA for approval.

e. The building used for overnight storage of ammunition and explosives shall be specifically included in the security patrol schedule of the station. Guards shall check these buildings during their patrol. The building shall receive the additional nonworking-hour inspections considered necessary by the commanding officer commensurate with the added explosives storage risk involved. In addition, the fire department shall be specifically advised of buildings that contain explosives. If the operation in a building is to be inactive for a period in excess of 108 hours, all ammunition and explosives shall be removed to magazines. Hazardous materials, including explosive materials, shall not be allowed to accumulate within an operating building except for the minimum quantities necessary to maintain individual operations. Normally, supplies exceeding approximately an 8-hour work requirement shall be kept in a ready service magazine. The ready service magazine, located at intraline distance from the operating building, shall contain only that quantity of explosives that is appropriate for the separation distance.

NOTE

For RDT&E operations, when the facility or operating procedures mitigate potential hazards or when overnight storage is demonstrated as being essential to mission accomplishment, see appendix F, paragraph F-10.13.2.

11-6.4. TRANSFER FACILITIES. Transfer facilities such as interchange yards, shipping and receiving sheds, sidings, segregation facilities, and classification yards shall not be used for temporary storage of

ammunition and explosives. See paragraph 12-9 for specifications concerning operations at transfer points.

11-6.5. PIER FACILITIES. No ammunition and explosives shall be stored on an open pier or in a pier shed, except for staging to support immediate loading or offloading operations.

11-7. WASTE MILITARY MUNITIONS (WMM).

11-7.1. SCOPE AND APPLICABILITY. The Environmental Protection Agency (EPA) promulgated the Munitions Rule (62 FR 6621, February 12, 1997) to define when chemical and conventional military munitions become hazardous waste and to provide for the safe storage and transportation of such waste. The MR sets forth two approaches for the storage of WMM:

a. A Conditional Exemption (CE) from certain Resource Conservation and Recovery Act (RCRA) requirements;

b. A new RCRA storage unit standard (Subpart EE, or Parts 264 and 265). This chapter establishes additional requirements for storage of WMM.

11-7.2. WAIVERS AND EXEMPTIONS. Waivers and exemptions from Defense Explosives Safety Regulation (DESR) 6055.09 are not authorized for ammunition and explosives storage facilities [ammunition storage units (ASU)] storing CE WMM. Waivers and exemptions from DESR 6055.09 (series) will only be available to units storing waste munitions under RCRA unit standards (Subpart EE). Deviations from DESR 6055.09 must be obtained through the Secretarial Certification process described in paragraph 1-6.3.

11-7.3. REQUIREMENTS FOR STORAGE OF WMM UNDER CE.

11-7.3.1. Activities storing WMM under CE must comply with 40 CFR 266.205(a) and the following.

NOTE

The MR established CE does not apply to chemical ammunition or chemical munitions.

a. Maintain records, for a minimum of 3 years from the last day the waste munitions was stored, that describe:

(1) The type of WMM stored by standard nomenclature, Lot Number, Federal Supply Class (FSC), National Stock Number (NSN), Department of Defense Ammunition Code (DoDAC), and condition code.

(2) The quantity of each type WMM stored.

(3) The date that each military munitions, by type, was identified as waste.

(4) The last storage date for each, by type, WMM.

(5) The storage location or locations (that is, building number or storage pad, and grid coordinates) used.

(6) The disposition (that is, destroyed, demilitarized, shipped) and date of action, by type, of the waste munitions.

(7) When applicable, the sending and receiving sites for those WMM received from or shipped to off-site sources.

b. Physically separate on a separate pallet or shelf WMM from non-WMM when both are stored in the same ASU.

c. Clearly mark the segregated WMM to ensure proper identification.

d. Store waste munitions under CE in ASUs that comply (without waiver or exemption) with the provisions of DESR 6055.09. Each ASU storing WMM or explosives under CE must be included in a DWESO-approved explosives safety site plan that the installation keeps on file. Those portions of the site plan addressing ASUs storing WMM under CE shall be made available to appropriate Federal or State environmental regulatory authority upon request.

e. Have SOPs or plans which are designed to provide safety, security, and environmental protection. These plans will be coordinated with the appropriate Federal, state, and local emergency response authorities (for example, law enforcement, fire departments, hospitals, and etc.) and established planning committees.

11-7.3.2. The unpermitted or uncontrolled detonation, release, discharge, or migration (loss or theft, or as a result of fire or explosion, etc.) of WMM out of any storage unit that might endanger human health or the environment will result in the immediate loss of CE for those WMM. Incidents of this nature and the loss of CE require reporting in accordance with paragraph 11-7.3.6 below.

11-7.3.3. The appropriate Federal or State environmental regulatory authorities may withdraw CE based on review or inspection of the activity's compliance with the requirements for storage of WMM under CE. The CNO (N4) may, at any time, restrict an activity from using CE. In addition, the DWESO or NOSSA, upon discovery of a condition that could warrant loss of CE, will report the condition to the CNO (N4L), and to the activity commanding officer.

11-7.3.4. If CE is lost, the WMM are subject to other RCRA hazardous waste regulations. The activity must obtain any required RCRA permits because of the loss of CE.

11-7.3.5. Activities may apply for reinstatement of CE per 40 CFR 266.205(c).

11-7.3.6. Reporting Requirements for CE. In addition to other applicable reporting requirements, activities will notify their chain of command, the DWESO Chairman [through NOSSA and CNO (N4L)], the appropriate Federal or State environmental regulatory authority, and established local committees as follows:

a. Telephonically or, electronically (by e-mail message or facsimile and using the format specified in the instructions cited in paragraph 1-5.3) within 24 hours from the time the activity becomes aware of any unpermitted or uncontrolled detonation, release, discharge, or migration of WMM out of any storage unit (loss or theft, or as a result of fire or explosion, etc.) that may endanger human health or the environment; and

b. In writing, if the initial report was telephonic, within 5 days from the time the activity becomes aware of any unpermitted or uncontrolled detonation, release, discharge, or migration of WMM out of

any storage unit (loss or theft, or as a result of fire or explosion, etc.) that may endanger human health or the environment. Follow-up reports to NOSSA, CNO (N4L), and DWESO are only required when pertinent information, which was not previously reported, becomes known. Such reports, to include a report of investigation, will comply with the requirements of paragraph 1-5.3.

11-7.3.7. Closure of Facilities Storing Waste Munitions under CE. In addition to the explosives safety requirements of paragraph 2-1.13, when a unit that stored WMM under CE is permanently taken out of service for the storage of non-waste and WMM, activities will ensure that the storage unit is appropriately closed by performing the following:

a. Activities must notify the appropriate Federal or State environmental regulatory authority in writing at least 45 days before the closure activities begin. Initiation of these closure procedures should occur within 180 days after the date the decision is made to permanently stop using the storage unit for the storage of military munitions.

b. Upon completion of closure activities, a "certification of closure," signed by the activity commander, or other equivalent level authority, and by an independent (that is, an individual not assigned within the commander's or equivalent-level authority's chain of command) registered professional engineer must be submitted to the appropriate Federal or State environmental regulatory authority within 90 days of completing the closure activities.

c. The certificate of closure must state, at a minimum, that each of the explosives safety requirements set out in paragraph 2-1.13 have been met and that WMM and residues are removed in such a manner as to protect the public and the environment consistent with the planned use of the storage unit and of the property.

d. If closure certification cannot be rendered, the activity must contact the appropriate Federal and State environmental regulatory agency to determine the appropriate course of action.

11-7.3.8. Discontinuance of Use for the Storage of WMM. When a storage unit that stored WMM under CE is permanently taken out of service for the storage of WMM but is to continue in service for the storage of non-WMM, activities will ensure that WMM and residues are removed.

11-7.3.9. If a unit that stored CE WMM will no longer be used because it is being excessed and transferred to another use under a Base Realignment and Closure or similar transfer action, the requirements of that transfer or of Section 120 (h) of the Comprehensive Environmental Response, Compensation, and Liability Act (CERCLA), may be used to satisfy the above closure requirements. Alternatively, the corrective action requirements of RCRA (detailed in 40 CFR Part 264, Subpart F) may be used to satisfy closure requirements if the environmental response actions associated with the property transfer are being managed under that process. Although States should be requested to accept these alternative response actions as meeting closure requirements, State environmental regulatory authorities may require additional, more stringent, closure standards for units that stored CE WMM.

11-7.4. CLOSURE OF FACILITIES STORING WMM UNDER RCRA. In addition to those explosives safety requirements in paragraph 2-1.13, closure procedures for those sites operating under existing RCRA permits will follow those closure requirements stipulated in the respective permit.

11-7.5. OTHER STORAGE STANDARDS. Many States regulate waste management activities, including the storage of WMM. In the event such State regulations conflict with DWESO or Department of the Navy explosives safety standards, the affected activity shall attempt to resolve the conflict. For

those issues that cannot be resolved, the activity, via its chain of command, NOSSA, and CNO (N4L) or MARCORSYSCOM (PM AMMO), shall notify the Chairman, DWESO, through their Board member, of any irreconcilable conflict of State law, regulation, or directive with these or other Department of the Navy explosives safety standards. The Chairman, DWESO, will review the law, regulation, or directive for any potential impact on explosives safety and will provide assistance, in accordance with the Deputy Under Secretary of Defense (Environmental Security) (DUSD{ES}), in resolving such regulatory conflicts. Nothing in this paragraph shall affect the Department of the Navy's right to seek review of the state law, regulation, or directive in a court of competent jurisdiction.

11-8. STORAGE REQUIREMENTS FOR SPECIFIC TYPES OF AMMUNITION.

11-8.1. STORAGE OF BUILK EXPLOSIVES. Bulk explosives include black powder, high explosives, and initiating explosives.

11-8.1.1. Storage of Black Powder.

a. Storage Compatibility. Bulk black powder should be stored by itself in magazines.

b. Miscellaneous Black Powder Ammunition. If separate storage is not available, black powder blank charges for saluting, signaling, or training may be stored with bulk black powder or black powder igniters.

c. Explosive Quantity or Limit. The quantity of black powder stored in a magazine shall not exceed 50,000 pounds, unless otherwise approved by NOSSA.

d. Storage Regulations. The following regulations are applicable when stacking bulk black powder containers inside a standard magazine:

(1) Containers shall not be stacked to a height that may cause damage or deformation of the lower layers by the weight of the upper layers.

(2) The bottom layer of containers shall rest on either wood or metal dunnage.

(3) Grounding procedures specified in chapter 5 shall be followed.

11-8.1.2. High Explosives.

a. Storage Containers. Bulk high explosives shall be stored in their packing containers.

b. Storage Compatibility. If magazine space permits, different types of high explosives shall not be stored together. Where magazine space is limited, mixed storage is permitted if compatibility is maintained. See table 3-10 of this manual or Table 2-7 of NAVSEA SW020-AC-SAF-010 for permitted mixed storage of bulk high explosives. Bulk high explosives shall not be stored with chemical ammunition that contains incendiary charges or white phosphorus, or with primers, detonators, or other initiating devices. Bulk initiating explosives and other high explosive stored wet shall not be stored with dry high explosives.

c. Explosives Quantity or Limit. The quantity of bulk high explosives in a magazine or any storage site shall not exceed 500,000 pounds NEW.

d. Storage Regulations. Containers shall be stacked in such a way to permit inspection and to allow the air to circulate through them. The containers shall be stored with their tops facing up to prevent loose explosive from sifting out of the container. New stocks shall be separated from old stocks. When several explosives are stored in one magazine, they shall be carefully separated for ready identification. Adequate dunnage shall be used to raise the containers at least 1-inch above the floor. Bulk picric acid shall not be stored or used where it will come in contact with metals, lime, plaster, ammonia fumes, or oxidizing agents such as sodium nitrate or potassium chlorate. It shall not be permitted to dry and crystallize in laboratories. Naval laboratories shall check their supplies for crystallized picric acid. Any found shall be reported immediately to the nearest EOD or military establishment for removal and disposal. Dry picric acid is a sensitive explosive requiring careful handling. Laboratory personnel shall take no actions other than reporting its presence.

11-8.1.3. Initiating Explosives.

a. Containers for Storage. The storage of bulk initiating explosives in shipping containers is permitted. When storage is in cloth bags that are immersed in distilled water the cover should contain a window for inspection purposes. If there is a possibility that the distilled water could freeze in storage, ethyl alcohol should be added to the water.

b. Storage Compatibility. Bulk initiating explosives shall not be stored with any other explosives, but they may be stored together.

c. Explosive Quantity or Limit. The amount of bulk initiating explosive in storage should be limited to the smallest possible amount.

d. Storage Regulations.

(1) Bulk initiating explosives shall be stored wet, with exception of limited quantities (5 pounds or less) of dry initiating explosives. Such quantities may be stored in service magazines with other explosives and in the supported operating building.

(2) When bulk initiating explosives are stored in their shipping containers, they shall be stored head end up, one drum high, and one drum per pallet with adequate aisle space maintained for inspection and handling.

(3) Only one person at a time shall be allowed in a magazine containing bulk initiating explosives except when absolutely necessary for weight handling. A second person must be within voice communication distance.

11-8.2. STORAGE OF BUILK PROPELLANTS. Bulk propellants include smokeless powder, solid propellants, and liquid propellants.

11-8.2.1. Smokeless Powder.

a. Containers for Storage. Bulk smokeless powder shall be stored only when packed in approved, air-tight, smokeless powder packing containers. If Leverpak bulk propellant drums are used they shall be stored only in Class I magazines, as defined in paragraph 5-2.1. Bulk powder shall not be stored in damaged containers.

b. Explosive Quantity or Limit. Not more than 1,000,000 pounds net weight of bulk smokeless powder normally shall be stored in a smokeless powder magazine of the recent design type.

c. Storage Regulations. The following regulations are applicable to the stacking of bulk smokeless powder containers inside a magazine that exceeds 1,000 cubic feet. For magazines smaller than 1,000 cubic feet see paragraph 11-2.6.3:

(1) When stored in stacks, containers shall be placed so their sides with the largest surface face the aisle. Containers shall be stacked not more than 10 to 12 containers high. At least 2 feet of space shall be left between the top of the stack and the eaves or arch of the roof.

(2) Each index in a magazine shall be stacked separately to permit ready inspections and removal.

(3) Aisle space should be approximately 3 feet between stacks of containers. Distances of containers from magazine walls should be a minimum of 2 feet from the side and rear walls and a minimum of 5 feet from the front of the magazine. Sufficient space shall be provided to allow inspection and/or removal of containers without extensive handling or restacking of containers.

(4) Dunnage shall be the minimum necessary to prevent shifting of rows, tiers, or stacks of containers while permitting adequate ventilation and circulation of air around the containers. All containers in the rows nearest the floor shall be supported a minimum of 1-inch off the floor to provide protection against moisture or dampness.

d. Storage of Smokeless Powder, Centralite (Cordite N), Flashless (SPCG) Powder. All shipping and storing regulations for smokeless powder apply to SPCG powder. SPCG powder that has been exposed to temperatures above 110° F for a cumulative total of 500 hours shall be segregated and placed in separate magazines away from all serviceable powder. SPCGpowder contains only one-tenth of the volatile solvent contained in standard smokeless powder and is, therefore, less susceptible to ballistic change in storage.

e. Storage of Nitrocellulose. Storage of dry nitrocellulose is not permitted because it possesses all the hazards of a sensitive and easily ignited high explosive. Nitrocellulose must be stored wet with water or alcohol to maintain a 25% to 30% total volatile content by mass and stored in sealed containers to prevent evaporation. For RDT&E operations, nitrocellulose shall be stored wet in water or solvent to maintain a 15% to 30% moisture content. The stability of each NC lot in storage shall be verified annually. Nitrocellulose is substantially nonexplosive when stored in an area where explosives or ammunition cannot ignite it. Nitrocellulose should not be subjected to high temperatures in storage and shall be inspected periodically to ensure retention of specified water/alcohol moisture content. Since the nitrocellulose has no stabilizer, it should not be retained longer than one year, unless stability is checked.

11-8.2.2. Solid Propellants.

a. Storage of Ballistite. Bulk ballistite shall be stored in the same way as smokeless powder. It shall be packed in an approved wooden box, metal container, or fiberboard shipping container that conforms with applicable DOT regulations. If Leverpak bulk propellant drums are used, they shall be stored only in Class I magazines as defined in paragraph 5-2.1.

b. Storage of Solid Propellants. Hazards involved with storing solid propellants used in rocket motors are described in paragraph 11-8.7.2.

11-8.2.3. Energetic Liquids.

a. Most energetic liquids may be stored in suitable large tanks in main storage areas, or in tanks of lesser (limited) capacity in ready storage areas. Where large storage tanks are not feasible or are not permitted, energetic liquids shall be stored in portable containers. These containers shall be constructed of suitable materials and size for each specific propellant as prescribed in NAVORD OP 3199 Volume 2.

b. Grass, weeds, vegetation, organic matter and other objectionable and dangerous material shall be cleared and maintained in such condition for a distance of at least 50 feet from the perimeter of the storage area. All tanks shall be bermed to contain any leaks, spills, overflows or discharges of contents.

c. Tanks containing energetic liquids subject to decomposition or excessive evaporation losses when exposed to heat, shall be provided with a suitable roof or shall be housed within suitable buildings to protect the tanks and contents from the direct rays of the sun and excessive temperatures.

d. Large tanks containing the same or similar energetic liquids require separation from each other only as necessary to permit inspection, repair, painting and maintenance. ESQD requirements and the effects of storage location on the hazardousness of energetic liquids are described in paragraph 7-15.

e. Drums and portable containers of energetic liquids shall not be stacked against the walls or in the aisles of storage buildings. They shall not block doorways or exits. Drums containing the same energetic liquids or similar energetic liquids permitted to be stored together may be stacked in contact with each other. Adequate aisles in storage buildings adjacent to the walls, and to adjacent piles stored therein, shall be provided for inspection and passage of handling trucks, handling equipment, and for removal of drums and containers when necessary. When drums and containers are stacked more than one layer high, proper dunnage of one-inch minimum shall be used between the layers to restrain the containers and prevent damage that may result in leakage.

f. Inert materials, missile hardware, missile component parts, etc., shall not be stored in energetic liquid storage buildings and storage spaces.

g. Energetic liquid storage areas are restricted to energetic liquid containers, approved handling appliances, decontaminating or neutralizing material for the particular propellant, and approved fire protection and safety equipment. Ordnance that contains energetic liquids that emit gases or vapors shall not be stored in magazines that have electrical service unless the electrical service is approved for use with the types of gases and/or vapors.

11-8.2.4. Ordnance Containing Fuel-Air-Explosives. Ordnance that contains Fuel-Air- Explosives (FAE) shall not be stored in magazines that have electrical service unless the electrical service is approved for use with the types of gases and/or vapors that may be emitted from these ordnance items.

11-8.3. STORAGE OF GUN PROPELLANT CHARGES. Gun propellant charges include separated ammunition charges and separate loading ammunition charges.

11-8.3.1. Storage of Separated Ammunition Charges. The provisions of paragraph 11-8.2 in regard to storing, stacking, separation according to lot and caliber of powder, and ready access of bulk propellants, are applicable to separated ammunition charges, as well as to bulk smokeless powder.

11-8.3.2. Separate Loading Ammunition Charges.

a. Container for Storage. Smokeless powder bag charges when stored in magazines shall be in an approved, standard, airtight powder tank. The cover shall be secured with sealing wire in accordance with the applicable general arrangement drawings.

b. Explosive Quantity or Limit. Not more than 1,000,000 pounds net weight of smokeless powder shall be stored in a smokeless powder magazine.

c. Storage Regulations. The following regulations are applicable to the stacking of smokeless powder bag charges inside a magazine:

(1) Separate loading ammunition charges are assembled by ammunition lot, each lot containing only one index of powder. Although two or more ammunition lots may contain the same powder index, each ammunition lot shall be treated as a separate entity for purposes of storage, inspection and evaluation. Smokeless powder bag charges shall be stored by individual containers.

(2) All containers should be stored so that their covers may be easily checked for tightness and the presence of sealing wire without disturbing other tanks.

(3) Dunnage shall be level, and if necessary, shims or wedges should be used.

(4) Containers of smokeless powder bag charges up to and including 8 inches in caliber are stacked horizontally. 16"/50 caliber bag charges shall be shipped and stored vertically in pallet adapters.

(5) Care shall be taken to store the tanks so that the interlocking collars on the reinforced stowing bands are in proper alignment, and all weight is bearing on the reinforced sections of the container.

(6) When one index of powder is made into charges of more than one weight for a different type of gun or projectile or for more than one muzzle velocity such as service, and reduced, or into more than one ammunition lot of the same type of charge, all charges of the index should be kept together. However, each type of charge and ammunition lot shall be adequately segregated and marked to permit ready identification, inspection, issue, overhaul, or breakdown with a minimum of handling and restoring of the other charges in the same index.

11-8.4. STORAGE OF GUN AMMUNITION. Gun ammunition includes projectiles, fixed ammunition, and artillery ammunition.

11-8.4.1. Projectiles.

a. Special Arrangements of Projectiles for Storage.

(1) Stacks of Loaded Projectiles. These are boxed or unboxed loaded projectiles grouped together, but not palletized. The boxed or unboxed projectiles are arranged in close formation side by side, one on top of another, or both. Stacks are separated, on all four sides, from neighboring stacks by a clear floor space.

(2) Stows of Palletized Loaded Projectiles. These are one or more pallets of loaded projectiles arranged in close formation side by side, one on top of another, or both.

b. Loaded and Fuzed, and Loaded and Unfuzed Projectiles. For storage, no distinction shall be made between loaded and fuzed projectiles, and loaded and unfuzed projectiles that have been fitted with approved plugs, provided the compatibility group requirements of table 3-10 of this manual or Table 2-7 of NAVSEA SW020-AC-SAF-010 are met (see note 2 of either table).

c. Storage Without Containers. Projectiles can be stored satisfactorily by simply protecting the rotating band. Projectiles may be stored in approved packing boxes, crates, or pallets. All loaded and fuzed projectiles larger than 5 inches shall be stored so that their rotating bands are protected.

d. Boxes and Crates for Loaded Projectiles. Loaded projectiles 3-inch caliber and larger may be stored in packing or shipping crates or in boxes whenever they are received in such containers except when specifically prohibited by NOSSA. Loaded projectiles 3 inches or smaller, after loading or after disassembly, shall be placed in shipping containers until required for assembly as fixed ammunition. They may also be stored in any container permitted for shipment of loaded projectiles by the DOT regulations. Loaded illuminating projectiles may be stored in their shipping containers.

e. Storage Compatibility. In a magazine where loaded projectiles are stored, only the following additional items are permitted to be stored: compatible items specifically listed in NAVSEA SW020-AC-SAF-010, the packing and shipping containers of these items if authorized in the preceding paragraphs, slings actually assembled on projectiles, approved battens and metal dunnage actually in use, steel pallets and pallet adapters actually in use, thermometers, tally boards, and static grounding equipment.

f. Storage Regulations for Unpalletized Projectiles.

(1) Kind of Projectiles in a Stack. All projectiles in any one pile shall be the same caliber and contain the same kind of burster charge. If possible, the different ammunition lots of loaded projectiles of any MKs and Mods should be stored in separate stacks. If different lots are in the same stack, they should be placed so that projectiles of any one lot may be removed with a minimum amount of moving and shifting of the other projectiles.

(2) Maximum Height and Width of a Stack. Under no circumstances shall piles of loaded projectiles be higher than 72 inches or wider than the length of two projectiles, unless they are 8-inch projectiles or larger. Eight-inch and larger projectiles shall be stored on their bases. Groups of 8-inch and larger projectiles may be as wide as practical, considering the available storage area and explosive limit of each group. Stacks of boxes that contain loaded projectiles shall not be more than two boxes wide.

g. Storage Regulations for Palletized Loaded Projectiles. Loaded projectiles that are stored palletized must comply with the compatibility requirements specified in paragraph 11-8.4.1.e.

h. Storage Regulations for Loaded Projectiles, 155 mm and Larger. Loaded projectiles 155 mm and larger shall be stored on their bases with their longitudinal axis vertical. Projectiles received on wooden adapter pallets are not required to be removed from their pallets for placement on metal dunnage or grounding. When more than one magazine is required for projectiles 155 mm and larger, all projectiles of the same caliber should be stored in the same magazine if practical and permitted.

i. Storage Regulations for Loaded Projectiles, 5 and 6 Inch.

(1) Loaded projectiles 5 and 6 inch, except White Phosphorus (WP)- and Plasticized White Phosphorus (PWP)-filled projectiles and palletized projectiles, shall be stacked on their sides with their

longitudinal axis horizontal. Projectiles in piles shall be arranged so that all projectiles in one row of a two-row pile shall face in the same direction, and the two rows shall be arranged so that projectiles in the adjacent rows are positioned nose-to-nose or base-to-base. Adjacent stacks shall be similarly arranged to provide the nose-to-nose or base-to-base orientation. Additional dunnage shall be used as necessary to stabilize and strengthen the pile. This method of stacking permits the use of the smallest possible aisle space between stacks, and in case of detonation in any pile, may prevent detonation of adjacent piles.

(2) All WP- and PWP-filled projectiles, palletized and unpalletized, that are serviceable and ready for issue and that are stored in magazines where temperatures may rise to 100° F, shall be stored vertically, nose up. Repackaging of unserviceable WP-filled projectiles received from any source that are packaged horizontally is not warranted if stored in magazines where temperatures will remain below 100°F. WP-filled projectiles are vertically stowed when repalletized as part of the renovation process.

j. Dunnage. Only metal dunnage shall be used for storing projectiles, except when they are received on wooden adapter pallets.

k. Fuze Holes and Fuze Covers. Under no circumstances shall any loaded projectile be stored with its fuze hole open. The fuze holes shall be closed by approved fuzes or by the fuze hole plugs specified in ordnance drawings. A fuze or fuze hole plug is needed to protect the threads of the fuze hole, to keep dirt out of the fuze cavity, and to provide protection against fire or explosion. Plastic plugs, as well as metal plugs when available, may be used for this purpose during local handling and interim periods of storage. Separate loading projectiles fuzed with a nose fuze shall not be stored in magazines with their fuze covers or caps removed. Fuze covers shall be in place and properly seated to protect the nose fuze from damage and deterioration.

l. Empty Projectiles. Empty projectiles shall be stored in inert materials storehouses.

11-8.4.2. Fixed Ammunition.

a. Containers for Storage. Fixed ammunition is stored in the original packing containers.

b. Storage Compatibility. Fixed ammunition should be stored alone. When a lack of magazines makes this procedure impractical, the provisions of NAVSEA SW020-AC-SAF-010 shall apply. If practical, fixed ammunition of different calibers shall be stored separately. In addition, fixed ammunition of the same caliber should be stored so that different types of projectiles are separated within the magazine.

c. Explosive Quantity or Limit. The maximum quantity of fixed HE ammunition that may be stored in a magazine is determined by the total NEW contained in the projectile. The weight of the propellant is not considered in determining the NEW. Not more than 500,000 pounds total NEW contained in the projectile shall be stored in a magazine.

d. Storage Regulations. Containers of fixed ammunition shall be stacked for storage as follows:

(1) Fixed ammunition shall be stacked to allow free circulation of air within the magazine and easy access to the containers for inspection.

(2) The height of stacks shall be such that the weight of the stack will not deform or crush containers on the bottom layers.

(3) The rounds of each ammunition lot of fixed ammunition shall be stacked together when possible. Serviceable rounds received from another station or ship, or renovated rounds may be stored with the ammunition on hand if all the rounds of ammunition are of the same lot.

(4) When feasible, and when consistent with the preceding subparagraph, fixed ammunition that contains the same index of smokeless powder, but not the same lot or type of ammunition, should be stored as nearly as possible under the same conditions of temperature and moisture as other fixed ammunition of the same index for uniformity of index history.

(5) Metal tanks shall be stored so that the interlocking collars on the reinforced stowing bands are in proper alignment, and all weight is bearing on the reinforced sections of the containers.

11-8.4.3. Artillery Ammunition. Artillery ammunition and its components shall be stored as specified for corresponding naval gun items described in this chapter. Artillery ammunition and its components, with the exception of separate loading artillery projectiles, normally are packed in moisture-resistant fiber containers that are boxed or placed in metal containers or in sealed metal cans. Crates may be used for additional protection of certain cartridge storage cases, projectiles with windshields, and dummy projectiles.

11-8.5. SMALL-ARMS AMMUNITION. The containers and specifications for storing small arms ammunition are described in the following paragraphs.

11-8.5.1. Magazine Storage. Small-arms ammunition should be stored in separate magazines. With reasonable care in storage, small-arms ammunition may be stored in any weather-proof warehouse if necessary, or when the quantities are small, in storerooms following approval through procedures defined in note 3 of table 7-22. Because small-arms ammunition is highly susceptible to theft, the warehouse or store-room shall be adequately equipped against unauthorized entry and shall meet the requirements for magazine security in paragraph 11-2.4. Small-arms ammunition shall be stored in its original packing container.

11-8.5.2. Clay Pigeon Targets. Clay pigeon targets shall not be stored in magazines. Clay pigeon targets shall be stored in well-ventilated spaces.

11-8.5.3. Storage Relations. Small-arms ammunition is adversely affected by dampness, lack of ventilation, and heat. The combination of high temperatures and damp atmosphere is particularly detrimental to its propellant powder. If the atmosphere is damp or temperatures are unusually high, layers of boxes shall be separated by dunnage to permit the free circulation of air. Ammunition shall be stored and stacked according to type and ammunition lot number, so the manufacturer, lot, caliber, grade, and quantity can be readily seen. Extreme care shall be taken to prevent mixing different lots of ammunition in one stack.

11-8.6. BOMB-TYPE AMMUNITION. The specifications for storing bomb-type ammunition are described in the following paragraphs. Bomb-type ammunition includes destructors, aircraft bombs, underwater mines, and torpedo warheads.

11-8.6.1. Containers for Storage. Bomb-type ammunition may be stored unpackaged or in the crates, boxes, pallets, or shipping bands in which it was shipped.

11-8.6.2. Storage Compatibility. High explosive bomb-type ammunition of various types and bursters may be stored together in the same magazine in accordance with the compatibility requirements of table 3-10 of this manual and Table 2-7 of NAVSEA SW020-AC-SAF-010. Storage compatibility group

D firing devices and/or arming devices must be stored in their original shipping containers or equivalent, and separated as far as practicable from storage compatibility group D bomb-type ammunition in the same magazine.

11-8.6.3. Storage Regulations. Bomb-type ammunition shall be visually inspected for the presence of explosive exudate in fuze cavities, prior to storage in magazine and before transfer from magazine.

11-8.6.4. Destructors. Destructors are stored as separate components. Components include batteries, destructor modification kits, tail sections, adapters, fins, etc., which are stored in separate magazines or in storehouses as appropriate. The major component of a destructor is an aircraft bomb without fuzes or fittings. This component is stored in accordance with the provisions listed below:

a. Aircraft bombs stored in metal crates shall be tiered horizontally. When stored with shipping bands around their suspension lugs for protection or when stored without them, as in the case of armor piercing bombs, bombs shall be stacked barrel-fashion and tiered on dunnage.

b. Tail vanes for all bombs, except certain small bombs with integral tails, are packaged separately in metal crates. Tail vanes shall be stored in their crates in inert materials storehouses.

11-8.6.5. Storage Regulations for Underwater Mines. Underwater mines may be stacked to a height consistent with the strength of the containers and the stability of the stack or rack.

11-8.6.6. Containers for Storing Torpedo Warheads. Torpedo warheads may be removed from their shipping boxes and stored either base down on the protecting rings or on horizontal storage racks. Warheads may be left in shipping containers when practical.

11-8.7. ROCKET-TYPE AMMUNITION. Rocket-type ammunition includes guided missiles, rockets, and Jet assisted Take-Off (JATO), Rocket Assisted Take-Off (RATO) units.

11-8.7.1. Storage. Guided missiles, including missile components and sections, are packed in special containers that also are used when they are shipped and stored.

11-8.7.2. Rockets.

a. Containers for Storage. Rocket heads, motors, and unassembled rounds may be stored in their original shipping boxes or pallets. Rocket motors may be stored in racks if each motor is horizontally supported in a minimum of two places, individually secured, and protected as it was in its shipping container.

b. Storage Procedures. Rockets shall be stored in accordance with the following procedures:

(1) Assembled rocket motors and rocket motor igniters shall be kept away from sources of electricity and radio-frequency (RF) transmitters because they may be accidentally ignited from induced current. For safe distances from RF transmitters, refer to NAVSEA OP 3565/ NAVAIR 16-1-529.

(2) Assembled complete rounds of 5-inch and smaller rockets may be stored in the propulsive state, with their warhead and motor assembled, provided they are installed in complete “launcher-shipper” containers that have been prepared in shipping configurations.

(3) All WP- and PWP-filled 3.5-inch rockets should be palletized and stored vertically, nose down. This type of ammunition is received from the Department of the Army activities and should be

examined to determine compliance with the vertical palletizing requirement. Any WP-filled 3.5-inch rockets improperly palletized shall be segregated, and steps shall be taken to ensure that these items are not issued to the fleet.

11-8.7.3. JATO Units. JATO units are normally classified as HC/D 1.1 or 1.3 and must be stored to meet these classifications. Units may be stored in any position. Flammable dunnage, other than pallets generally used to pack and ship JATOs, shall not be used in magazines. Magazine temperatures shall be monitored in accordance with procedures established by the program manager for these items. JATO igniters, except those permanently installed in units, shall be stored in a separate magazine.

11-8.8. EXPLOSIVE INITIATING DEVICES, BOOSTERS, AND TRACERS. The containers and specifications for storing explosive initiating devices, boosters, and tracers are described in the following paragraphs.

11-8.8.1. Containers for Storage. Explosive initiating devices, boosters, and tracers shall be stored in their original packing containers. Each individual detonator shall be stored in its own standard packing or storage container, or in its specially designed storage block to provide a fixed wall thickness between detonators.

11-8.8.2. Storage Compatibility. Explosive initiating devices, boosters, and tracers should be stored in separate magazines. Combination storage of these items, or storage of any other ammunition, shall take place only in accordance with the compatibility requirements of table 3-10 of this manual or Table 2-7 of NAVSEA SW020-AC-SAF-010. The following storage requirements should be met:

a. Compatibility group B detonators shall never be stored in close proximity to high explosives, either bulk or charges, and shall be kept away from fires, steam piping, electric apparatus, and locations susceptible to heavy shocks.

b. Compatibility group B detonators that are not assembled or sealed within a fuze as an integral part of the fuze shall not be stored in a magazine that contains explosive-loaded fuzes, explosive boosters not containing detonators, or explosives of any kind except in accordance with the compatibility requirements of table 3-10 of this manual or Table 2-7 of NAVSEA SW020-AC-SAF-010.

c. Auxiliary boosters and boosters that are not assembled with detonators, but are packed in the same container with bomb-type ammunition, may be stored with the bomb-type ammunition that belongs to the boosters.

d. Boosters that do not contain detonators, are integral parts of warheads, or are designed for storage in warheads may be stored in the warheads or in the magazine with the warheads.

e. Boosters assembled with detonators may be stored in the same magazine with detonators in accordance with the compatibility requirements of table 3-10 of this manual or Table 2-7 of NAVSEA SW020-AC-SAF-010.

f. Modified or experimental initiating devices shall not be stored in magazines with service-approved initiating devices without NOSSA approval.

11-8.8.3. Magazine Storage. The storage of fuzes, primers, and similar devices should be divided among the magazines to preserve assets. Lock primers, torpedo impulse primers, saluting primers, and other small primers that are not assembled with ammunition may be stored in a small arms

magazine unless otherwise indicated in table 3-10 of this manual or Table 2-7 of NAVSEA SW020-AC-SAF-010.

11-8.8.4. Storage Regulations. The following regulations shall be observed:

a. All containers shall be stacked with the tops of the boxes up, and segregated by lot number and type.

b. Stacks shall not exceed a height that would deform or crush the containers on the bottom layer.

c. The bottom layer of containers shall be supported on a pallet or dunnage.

11-8.9. GRENADES. Grenades are subject to accidental functioning from deterioration under unfavorable storage conditions. The firing device is especially vulnerable to deterioration. They should be stored in their original packing containers. Grenades should be stored separately whenever possible or as authorized in table 3-10 of this manual or Table 2-7 of NAVSEA SW020-AC-SAF-010. Inert rifle or hand grenades should be stored as specified for dummy drill ammunition. All WP- and PWP-filled rifle grenades should be palletized and stored vertically with their noses down.

11-8.10. MORTAR AMMUNITION.

a. General Requirements. Storage of light mortar ammunition, up through 81 millimeter (mm), but not including 81 mm M56, shall be similar to that for Navy fixed ammunition as provided in paragraph 11-8.4.2.a and 11-8.4.2.c. Storage of heavy mortar ammunition, larger than 81 mm and including 81 mm M56, shall be similar to that specified for bomb-type ammunition as provided in paragraphs 11-8.6.1 and 11-8.6.3.

b. Storage Compatibility. Unassembled boosters and fuzes should be stored as specified for fuzes and detonators in paragraph 11-8.8. Unassembled propellant increments shall be stored as specified for ballistite or smokeless powder in paragraphs 11-8.2.1 and 11-8.2.2. Ignition cartridges shall be stored as specified for small-arms ammunition in paragraph 11-8.5.

11-8.11. LAND MINES. Land mines are packed in wooden boxes or metal crates that may also contain the fuzes, activators, and accessories required for use. A box or crate may contain one mine or several mines of the same type. Antitank mines are stored as specified for bomb-type ammunition in paragraph 11-8.6.1 through 11-8.6.3.

11-8.12. GROUND-TYPE ROCKETS. Storage shall be in accordance with the hazard classification and storage compatibility group assignments.

11-8.13. CHEMICAL AMMUNITION. The containers and specifications for storing chemical ammunition are described in the following paragraphs. Further information on the types of chemical ammunition and safety precautions associated with each chemical filler are provided in NAVSEA SW073-AC-MMA-010.

11-8.13.1. Containers for Storage. Chemical ammunition is stored in its original packing container.

11-8.13.2. Storage Compatibility. Chemical ammunition with two or more groups of fillers shall not be stored together except as allowed by NAVSEA SW020-AC-SAF-010 or with specific authorization from NOSSA. When possible, chemical ammunition with different fillers of the same group should be stored in separate magazines to facilitate the detection, identification, segregation, and disposal of leaking

containers. When the number of suitable magazines does not permit segregation within groups, ammunition of the same group may be stored together, regardless of the chemical filler. Whenever possible, each kind of ammunition, including bombs, projectiles, and so forth, should be stored separately.

11-8.13.3. Magazine Storage. Permanent storage of chemical ammunition, when practical, should be in approved high-explosive magazines with complete lots in separate stacks. The containers should be piled so that individual containers may be readily inspected or easily removed if damaged or leaking. In magazines, this material may be handled with magazine cranes, forklifts with boom attachments, or other approved material handling equipment. Drains and means of washing down the walls and floors of the magazine should be unrestricted and located near the floor. Magazines with wood floors shall not be used for storing chemical ammunition. Floors should be concrete and treated with sodium silicate to render the nonabsorbent. The use of rubberoid or other floor covering is prohibited. All metallic parts of the magazines should be protected from corrosion with corrosion-resistive paint.

11-8.13.4. Underground Storage. Chemical ammunition and agents may be stored underground in natural caverns or in excavated chambers, but they may only be stored in single-chamber sites with non-porous floors and walls. Refer to paragraph 11-8.13.2 for storage compatibility requirements. All cracks and crevices in the floors and walls of the chambers shall be filled with materials that, in the event of agent leaks, will prevent retention of residual toxic agents. Also, the necessary measures shall be taken to ensure that leaking toxic agents cannot flow from the chambers.

11-8.13.5. Storage of Chemicals - Group A. In accordance with the Chemical Weapons Convention, the DON does not develop, procure, otherwise acquire, stockpile, or retain chemical weapons as explained in paragraph 1-7.5. Storage areas for chemical ammunition containing Group A chemicals should be on the prevailing downwind side of a station and as far as possible from an inhabited area, main road, main highway, or building. Other requirements are as follows:

a. Storage areas shall be designated by the commanding officer.

b. An audible alarm shall be provided in the storage area. The alarm shall be sounded in the event f a spill or release. This alarm shall be distinguished from those used for fire warning.

c. Group A storage areas shall be surrounded by a perimeter fence. The fence shall have signs posted at 250-feet intervals indicating that the area is for chemical storage. The signs should read, “This storage area contains chemical ammunition. Complete protective equipment must be worn if leaking ammunition is present.” In addition, any structure or storage area shall meet the requirements for security in accordance with OPNAVINST 5530.13 (series). Temporary storage areas shall have signs posted and security requirements shall be met.

d. Structures and areas used for storage of chemical ammunition shall be equipped with lightning protection.

e. Ammunition shall be stored in a manner that provides easy access for inspection and/ or removal of single items or storage units.

f. Items assembled with explosives and/or propellants shall be stored in earth-covered magazines or other structures that provide protection and containment in the event of an accident.

g. Chemical warheads, without explosives and without containers, may be stored in aboveground magazines, earth-covered magazines or warehouses of concrete block, metal sheet, or similar construction. Warhead sections in containers may be stored out of doors.

h. Bulk containers may be stored outdoors on dunnage. They shall be shielded from direct sunlight if necessary to prevent material degradation or pressure buildup. Bulk containers shall be stored in a manner that permits inspection of both ends of the container. Aisles shall be of sufficient width to permit easy passage of forklift trucks or emergency equipment.

i. Spray tanks, when packed in transport containers, may be stored like bulk agent containers. When not in transport containers, they shall be handled like bomb-type ammunition.

j. Shells, bombs, or other items filled with agents, but not assembled with explosive or initiating components, may be stored in the same manner as bulk containers.

11-8.13.6. Storage of Chemicals - Groups B, C, D. Chemical ammunition containing chemicals in groups B, C, and D shall be stored in accordance with paragraph 11-8.13.5 except that the requirement for audible alarms in storage areas or buildings is not mandatory and perimeter fences may be installed at the discretion of the commanding officer. However, Group B chemicals normally should be stored on the prevailing downwind side of a station. Magazines that contain Group C ammunition shall contain, or have the following equipment readily accessible on a work vehicle located immediately near to personnel working in the magazine:

a. A water-filled tank suitable for immersing any individual package.

b. Personal protective equipment, such as heavy leather or gauntlet-type rubber gloves, as well as ankle-length rubber aprons in sufficient quantity to equip all personnel who are working in the magazine. In addition, they shall be provided with proper eye protection (e.g., chemical goggles, face shield, or a combination of these) and/or head protection.

c. Phosphorus burns involving the eyes must be treated immediately. The most effective treatment is neutralization of any phosphoric acid present by irrigating with a 5% bicarbonate solution (5/6 cup sodium bicarbonate dissolved in a gallon of water.) Eyes should be continuously irrigated with copious amounts of normal saline or room temperature water for 10 to 15 minutes. Bicarbonate solution may be premixed or ingredients be immediately available for mixing when needed. A minimum of one gallon of water shall be maintained for immediate use. If premixed, the solution shall be sterile and the container labeled to show contents and date mixed. The mixture shall be replaced every 3 months or sooner if inspection reveals contamination. This solution may be applied to the eyes or any part of the body burned by WP. Upon completion of irrigation, a wet dressing; for example, cloth or mud, must be applied to stop the burning of WP by depriving it of oxygen. All burning particles that are readily accessible must be removed promptly. Since phosphorous is readily soluble in oil and certain other solutions, oily dressings or eye ointments must not be used. WP fumes are also irritating to the eyes as well as the respiratory tract.

d. A set of band cutters to facilitate the removal of individual leakers from pallets for water immersion.

e. A 5-gallon pail or other equivalent container and two sponges.

f. An adequate supply of fresh water to permit sponging of affected body areas and flushing of the eyes.

11-8.13.7. Storage of Sodium Igniters. Because of the different firefighting techniques employed when combatting sodium (Na) and WP fires, Na igniters and WP or other WP-loaded ammunition should not be stored in the same magazine or in adjacent compartments in magazines. Sodium ignites spontaneously and with great violence upon contact with water, which is used on phosphorus fires. Phosphorus ignites spontaneously when it comes in contact with air. No lubricants are required or authorized on igniters. No disassembly of igniters is authorized.

11-8.13.8. Storage of Ammunition that Contains WP and PWP. All WP and PWP that is serviceable and ready for issue, and is stored in magazines where temperatures may rise to 100° F, shall be stored vertically with their nose-ends up. Palletized WP- and PWP-filled Army 3.5-inch rockets and rifle grenades shall be positioned vertically with their nose-ends down. Repackaging of unserviceable WP-filled ammunition received packaged horizontally from any source is not necessary if it is stored in magazines where temperatures remain below 100°F. However, WP-filled ammunition should be stowed vertically when it is repalletized as part of the renovation process. If WP smoke warheads are received palletized in a horizontal position and there is no information showing them being stored only in an area where the temperature was not above 100° F, the following inspection should be performed if the units are to be processed for issue: X-ray or fluoroscope the units (or a random sample of the units) to determine if the WP filler has settled out on one side of the warhead. If it has, the unit may be reconditioned by placing it vertically in a heated area for 24 hours. The units must reach the internal temperature of about 113° F to settle the WP filler back so voids will be only in the nose end. This will prevent the unit from wobbling when fired and from returning into the plane flight path.

11-8.13.9. Quantity-Distances. Quantity-distances for toxic agents or items in Groups A through D shall be determined by NOSSA on an individual site-specific basis as part of the explosives safety site approval process.

11-8.13.10. Chemical Agent Hazards or Combined Chemical Agent and Explosives Hazards. These items are chemical agent filled ammunition, chemical ammunition, and chemical agent filled components. Depending upon the type of agent, its persistency, toxicity, and other characteristics, the primary safety consideration is the area of agent dispersal. Items that contain only toxic chemical components are assigned to HC/D 6.1. Items which contain both explosives and toxic chemical components are assigned to HC/Ds 1.1 through 1.4, as appropriate. Both the explosives and toxic chemical hazards shall be considered for storage.

11-8.13.11. Damaged and Leaking Items.

a. Required Report. A report of any leaking of damaged chemical items shall be made to the supervisor of the storage area who will initiate procedures to process the material for disposition. The report will include the following information:

(1) Type and amount.

(2) Lot number.

(3) Date discovered.

(4) Details on the nature of the leak.

(5) Disposition or recommended disposition.

b. Processing. When damaged, leaking, or otherwise unserviceable items are discovered, the items shall be marked. They shall be removed from the storage area promptly. If immediate disposition is not possible, they shall be rendered safe and segregated in a structure or area reserved for storage of defective items.

11-8.13.12. Marking of Storage Structures. Magazines and operating buildings that contain chemical ammunition shall be marked and numbered in accordance with paragraph 4-4.2.5.

11-8.13.13. Work Procedures in Toxic Storage Areas.

a. Control Center. An operation control center shall be established prior to beginning work in toxic storage areas. The center shall control keys to the storage areas and storage structures, and shall maintain a list of personnel who are authorized access to the areas. The control center shall be notified before starting any operation with chemical ammunition.

b. Preoperational Inspection. Before any operations are permitted within a structure, including a magazine, railcar, etc., the interior shall be monitored and inspected. The preoperational inspection shall be made by a supervisor wearing protective clothing appropriate for the chemical group of the chemical ammunition.

c. Procedures. The following procedures are to be followed for work in toxic storage areas:

(1) After determining that the atmosphere is free of contamination and that there are no apparent leaks, personnel may enter and begin work. In operations that involve Group A and B ammunition, personnel shall carry a protective mask in slung position. No other chemical protective clothing is required.

(2) If contaminated or leaking items are found, the structure shall be evacuated and closed, and the supervisor of the storage facility shall be notified. The leaking items shall be secured and removed and the structure shall be decontaminated before other operations may proceed.

(3) SOPs will be established for all operations performed on chemical ammunition. These shall describe the operation, set limits on personnel, indicate equipment and machinery that will be used and list required protective clothing.

(4) Workers in the chemical areas shall have immediate access to radio or telephone communication with the control center. Any accident or exposure shall be reported to the center immediately so the center can implement emergency measures and proper notifications.

(5) Each work party shall be equipped with first aid supplies appropriate for the type of agent or material involved in the operation.

(6) Each work party shall have a truck or an automobile immediately available for transporting injured or incapacitated personnel to the aid station. This transportation shall be in addition to the ambulance service that shall be available from the aid station.

(7) An individual shall not be permitted to work alone near chemical ammunition. The individual shall either be accompanied by a second person or under observation by a second person who shall be equipped to provide help in case of an accident.

11-8.14. PYROTECHNICS. The containers and specifications for storing pyrotechnics are described in the following paragraphs.

11-8.14.1. Containers for Storage. Pyrotechnics shall be stored in approved containers.

11-8.14.2. Storage Compatibility. Pyrotechnics should not be stored with other kinds of ammunition except as provided in table 3-11 of this manual or table 2-6 of NAVSEA SW020-AC-SAF-010. Water-activated pyrotechnics should be stored by themselves. Palletized loads or Fleet Issue Loads of pyrotechnics designated in table 3-1 of NAVSEA SW020-AC-SAF-010 as requiring the chemical symbol "Apply No Water" (ANW) must be marked to indicate that no water will touch them. In the event of fire, use firefighting procedures called out in Table 4-2 for chemical symbol "apply no water."

11-8.14.3. Storage of Pyrotechnics in General.

a. Pyrotechnics should be stored in a dry, well ventilated magazine out of the direct sunlight, and they should be protected against excessive or variable temperatures.

b. Storage of Photoflash Cartridges. Photoflash cartridges should be stored in magazines that provide protection from rain, damp atmospheric conditions, and exposure to direct sunlight.

11-8.14.4. Storage Procedures. Because there are many types of pyrotechnics and their conditions may not be known, pyrotechnics should be divided into several different storage groups within a magazine. Where possible, they should be separated according to type, color, and lot number. Boxes that contain signal cartridges that are discharged by percussion primers should be placed flat with the top up.

11-8.14.5. Priority of Issue. Issue oldest material first unless a NAR provides overriding direction.

a. Pyrotechnics that have been stored the longest or under the least favorable storage.

b. Lots of equal age, the lowest lot number shall be issued first.

11-8.14.6. Time in Storage. Some pyrotechnics are known to deteriorate in storage. The service life of these items is indicated by the marking. When the service life has expired, disposition instructions shall be obtained from the program manager.

11-8.15. DEMOLITION AND MISCELLANEOUS EXPLOSIVES AND AMMUNITION ITEMS. Demolition and miscellaneous explosives and ammunition items include electric and nonelectric blasting caps, electric squibs, detonating cord, demolition charges, quick match, blasting agents and gels, military and commercial dynamite, blank ammunition, and aircrew escape propulsion systems (AEPS) and cartridge actuated devices (CAD), propellant actuated devices (PAD).

11-8.15.1. Storage of Blasting Caps. Electric blasting caps without safety shunts or without their leg wires shorted shall not be stored at DON activities unless they are completely enclosed within an appropriate metal container that will contain the blast effects.

11-8.15.2. Storage of Electric Squibs. Electric squibs without safety shunts or without their leg wires shorted shall not be stored at DON activities unless they are completely enclosed within an appropriate metal container that will contain the blast effects.

11-8.15.3. Detonating Cord. Detonating cord may be stored for extended periods, even in the hottest climates, without deteriorating. It shall be stored in accordance with the specifications for demolition charges and bulk high explosives.

11-8.15.4. Storage of Demolition Charges and TNT. Demolition charges, block TNT, and other block explosive materials may be stored in their shipping containers in any secure magazines.

11-8.15.5. Storage of Quick Match. Quick match may be stored in pyrotechnic magazines.

11-8.15.6. Storage of Blasting Agents and Gels. Storage of these materials shall be as specified in literature appropriate to each type.

11-8.15.7. Storage of Military Dynamite. The general rules and regulations governing storage of demolition materials as specified in this manual apply to military dynamite.

11-8.15.8. DoW-Owned Commercial, Foreign, and Unapproved Ammunition and Explosives. Commercial explosives include mixtures based on nitroglycerin (NG), nitrostarch, ammonium nitrate or composites of these and other chemicals. They may be in a slurry, solid, or liquid form. Commercial explosives are not designed or procured to military specifications, and are not normally part of an inspection and evaluation or quality evaluation program. They tend to be in a constant state of change to meet the needs of industry. Further, commercial explosives are more hazardous in storage than military stock explosives. Storage temperature, temperature cycling and relative humidity will affect the rate of deterioration; therefore, the service lives of these explosives are not predictable. They are not designed for extended storage periods, nor are they packaged to meet military specifications; often requiring special storage conditions and frequent inspection in storage and prior to use. For these reasons, it is DON policy not to permit the routine storage of any commercial explosives. Certain activities, however, may store this material for operational reasons, as authorized in accordance with paragraph 2-1.4.13. Some commercial explosives are in the Navy inventory and have National Stock Numbers (NSN), Department of Defense Identification Codes (DoDIC), and Naval Ammunition Logistic Codes (NALC) assigned. Dynamite (M585 and M587), Water Gel Explosive (MY77), and Smokeless Powder Dupont 4064 (MY57) are examples of such items. The requirements listed below apply to all commercial explosives, both as individual components and when installed in higher assemblies such as the Canine Explosive Scent Kit (MN01 or MN76).

a. Commercial explosives shall be stored in accordance with the security risk categories specified in appendix A to OPNAVINST 5530.13 (series).

b. In addition to the requirements of this publication, the requirements of SECNAVINST 11011.47 (series) shall apply if approval has been granted by a higher level authority in accordance with paragraph 2-1.4.13 to store commercial explosives for a commercial concern or activity.

c. The general magazine requirements contained in chapter 7 and the general storage requirements for high explosives contained in this chapter shall be followed.

d. If the stability of commercial explosives is unknown, they shall be stored separately in accordance with paragraph 11-2.2.2.1.c. An exception is Canine Explosive Scent Kit (MN01), which contains an approved combination of commercial and military explosives.

e. Commercial explosives of unknown compatibility groups shall not be stored in the same magazine with any initiating or booster devices, either installed or separate.

f. Inventory records and the explosive containers shall indicate the date of manufacture of the explosives. Standard operating procedures shall require the issue of the oldest explosive first.

g. Wooden shipping boxes for commercial explosives may be damaged or contaminated with explosive residue to the point that they are not repairable/reusable and must be disposed. Complicating this disposal is the preservative in which the box may have been treated. The older boxes could have been treated with any of the following; pentachlorophenol, copper naphthenate, copper-8-quinolinate or zinc naphthenate. In recent years the wood preservative industry has been moving toward pressure treating with a form of arsenate.

(1) If the boxes are explosively contaminated and cannot be recovered for reuse, they must be treated at a Resource Conservation and Recovery Act (RCRA), subpart X, permitted site. The permit must allow for the disposal of all contaminants. This contamination would be the explosive involved and the preservative (if any) with which the box has been treated.

(a) The explosive contamination, most likely, would be a characteristic hazardous waste; that is, RCRA code D003.

(b) The preservative could be a characteristic hazardous waste or a listed hazardous waste identified in 40 CFR 261.

(2) If the boxes are damaged past the point of repair, but have no explosive contamination, and the wood has been treated, they must be treated as a hazardous waste.

h. Activities shall establish an inspection and evaluation process in accordance with paragraph 11-11 to assure that commercial explosives remain safe in storage and inventory records are correct. Inspection and evaluation shall be conducted on a monthly basis, at a minimum.

11-8.15.9. Commercial Dynamite. Dynamite is a generic term for a wide variety of high explosive formulations containing a blend of liquid and solid nitrate esters mixed with solid oxidizers and carbonaceous fuels. The primary ingredients can include NG, nitroglycol, ethylene glycol dinitrate (EGDN), nitrocellulose, oxidizing salts and fuel combined with special purpose ingredients such as dyes, antacids, sodium chloride and proprietary compounds. The wide variety of ingredients used as fillers in commercial dynamite, together with a wide variety of possible storage histories, makes the exact form of deterioration difficult to predict. Obvious signs of deterioration are hardness, discoloration, excessive softness, leaking that has proceeded to the extent of saturating the sawdust in shipping containers, or a crystallized deposit on the cartridge. Since the explosive salts used in commercial dynamite have some tendency to absorb moisture from the atmosphere, there always exists the possibility that liquid exuding from a cartridge is merely a water solution of the salts. However, the determination of the nature of the liquid exudate is a difficult undertaking in the field, and for safety purposes, one must assume the presence of NG. Four general types of commercial dynamite may be encountered:

a. Nitro or straight dynamite. A composition of NG or glycerol trinitrate absorbed in a mixture of various carbon-rich materials such as pulp or ground meal and sodium nitrate. A type of straight dynamite, called ditching dynamite, will propagate under the right soil conditions thereby eliminating the need for priming each charge. Nitroglycol or EGDN is a liquid explosive used in combination with the NG. The EGDN acts as an antifreeze while the NG is the sensitizer. EGDN is a slightly more powerful explosive than NG. When stick dynamite is removed from its wrapper, it is generally tan to reddish-brown in color. It normally has a loose, slightly moist, oily texture similar to a mixture of sawdust clay and oil. The strength of straight dynamite is the percentage of NG content where both NG and

nitroglycol/EGDN are combined into a single value. The other types of dynamite are rated against straight dynamite: an example is 40% special gel dynamite which contains only 15% NG/EGDN, but is roughly equivalent to 40% straight dynamite. Straight dynamite is manufactured in strengths from 5 to 90%.

b. Nitroglycerin gelatin dynamite. Dynamite consisting of a “gel” made by dissolving nitrocotton with NG. The gel varies from a thick viscous liquid to a tough, rubbery substance. As the strength increases, the consistency tends to be more rubber-like and less pliable. Nitroglycerin gelatin dynamite is manufactured in strengths from 20 to 100%.

c. Ammonia dynamite. Dynamite with a portion of the NG and sodium nitrate replaced with ammonium nitrate. There is also low-density ammonia dynamite which has special density-reducing agents added to reduce the strength. When removed from its wrapper, it is generally tan to light brown in color. Ammonia dynamite has a pulpy, granular, slightly oily texture. It is manufactured in strengths from 15 to 60%.

d. Ammonia-gelatin dynamite. Similar to gelatin dynamite except a portion of the NG has been replaced with ammonia nitrate. Ammonia-gelatin dynamite is manufactured in strengths from 25 to 90%.

11-8.15.10. Dynamite Storage and Inspection. Commercial dynamite should be stored in a cool, dry, well-ventilated magazine. Temperatures below minus 30 ºF, above 80 ºF, temperature cycling, and relative humidity above 40% should be avoided. Dynamite shall be inspected upon receipt, at time of issue, immediately prior to use, and at intervals not to exceed 30 days while in storage. The following requirements apply during inspection: Commercial dynamite that is exuding NG is extremely sensitive. The dynamite and exudate may initiate during handling. The following mixture of NG remover shall never be added to standing liquid or unabsorbed NG due to the exothermic reaction when it is mixed. For standing liquid, notify Explosive Ordnance Disposal (EOD). Magazine floors adjacent to the dynamite shall be inspected prior to opening dynamite containers. If the floor is discolored or oily, it must be cleaned using special procedures prior to continuing the inspection. The area shall be thoroughly scrubbed with a mixture of NG remover, consisting of 1-½ quarts of water, 3-½ quarts of denatured alcohol, 1 quart of acetone and 1 pound of 60% commercial solution sodium sulfide. The mixture shall be used freely to decompose the NG thoroughly and render it harmless. The liquid shall be wiped up with clean cloths and then the area shall be rinsed with fresh water and dried. The cloths used for cleaning shall not be stored and shall be disposed of by burning in a safe location. NG gives dynamite a heavy, pungent, sweet odor. NG liquid and vapors are quickly absorbed, are toxic, and will cause very severe and persistent headaches in a short period of time. Aspirin and other pain relievers are not effective for NG headaches; however, black coffee or caffeine citrate may provide some relief.

a. Inspection personnel shall wear rubber or plastic gloves when handling dynamite.

b. Only wooden wedges and mallets shall be used to open or close dynamite boxes.

c. No shoes with exposed nails, metal plates, cleats or other spark producing material shall be worn in magazines that contain dynamite.

d. Cases of commercial dynamite shall be stored flat so that the cartridges do not stand on end.

e. The first visible row or layer of dynamite shall be inspected prior to removing any dynamite. If deterioration is visible, the inspection shall be stopped, the container shall not be moved and EOD shall dispose of it as an emergency. If there is no deterioration visible on the first layer, the inspection shall

continue until all the dynamite is inspected. When the dynamite is replaced in the container, it shall be rotated 180 degrees.

f. Dynamite older than 18 months from the date of manufacture cannot remain in storage and cannot be shipped. If it is serviceable, it may be expended in routine training, blasting or EOD operations.

11-8.15.11. Blank Ammunition. Impulse and blank ammunition that does not contain black powder shall be stored in accordance with the compatibility requirements of table 3-10 of this manual or Table 2-7 of NAVSEA SW020-AC-SAF-010.

11-8.15.12. AEPS, CADs, and PADs. AEPS, CADs, and PADs shall always be stored in explosives designated areas. Fire crews shall be notified of the location, type, quantity, and explosive classification of all materials. Refer to NAVSEA SW020-AC-SAF-010 for hazard classification and compatibility requirements for magazine storage ashore.

11-9. MAGAZINE, MAGAZINE AREA AND STORAGE INSPECTION.

All areas used for long or short-term storage or holding of ammunition and explosives, shall be periodically inspected. For inspection purposes, the term “magazine” includes all such areas (for example, aboveground magazines, earth covered magazines, ready service lockers). The inspection shall include an examination of the facility or location, the surrounding area, and the material being stored. A SOP written in accordance with NOSSAINST 8023.11 (series) shall be developed for this inspection process. Magazines, magazine areas, and ammunition and explosives in storage shall be inspected as described in the following paragraphs.

11-9.1. MAGAZINE AND MAGAZINE AREA INSPECTION. Magazines and magazine areas shall be inspected prior to initial use, prior to reuse after being empty, and periodically while in use to ensure that the facilities are capable of safely storing ammunition, explosives, and other hazardous materials. The frequency and detail of the inspections depends on previous inspection results, the age of the magazine, storage inspection results, environmental changes, magazine type and purpose, and other factors. Magazine and magazine area inspection will be conducted, as a minimum, concurrently with storage inspection conducted in accordance with paragraph 11-9.2.

11-9.1.1. Magazine and Magazine Area Inspection Requirements. An SOP is required for magazine and magazine area inspections. This SOP may be separate from or combined with the magazine operations SOP. It shall contain the criteria necessary to determine compliance with this publication and other applicable instructions. The SOP shall address, but not be limited to, the following factors:

a. Housekeeping;

b. Fire hazards;

c. Compatibility of contents;

d. Net explosive weight;

e. Grounding system and lightning protection;

f. Security systems;

g. Physical condition and suitability of the facility structure for evidence of corrosion, distortion, cracks, loose or missing parts on doors, ventilators, window frames, etc.;

h. Transportation network including roads and rail service;

i. Power supply lines;

j. Firebreaks and fire protection equipment;

k. Environmental control;

l. Contents identification, arrangement, and segregation;

m. Posting of fire, chemical hazard and safety information, and explosive limits;

n. First aid equipment;

o. Alarm systems;

p. Unnecessary combustible material;

q. Abnormal odors, thermometer condition and log (if installed);

r. Evidence of tampering, forced entry, or sabotage;

s. Current magazine operating SOP. The inspection will determine the magazine's acceptability for use. All deficiencies will be corrected. Depending upon the deficiency or the corrective action necessary, the magazine may require downloading.

11-9.1.2. Magazine and Magazine Area Inspection Records. A record shall be maintained to document all deficiencies and corrective actions taken. Mandatory record entries include the date of inspection, inspection SOP used, deficiencies detected, and deficiencies corrected. All entries shall be signed. If no deficiencies are found during the inspection, the entry “No deficiencies” shall be made. Records shall be maintained for four years.

11-9.2. STORAGE INSPECTION. NAVSUP P-805 provides the inspection requirements for DON conventional ammunition in storage. An SOP shall be developed for storage inspection; it shall include those requirements noted above that are appropriate for the storage activity. Storage, magazine and magazine area inspection requirements may be contained in a single SOP. The frequency of storage inspection is dependent upon the same factors that establish magazine and magazine area inspection frequency. Storage inspections shall include the following specific requirements found in the following paragraphs:

a. Paragraph 11-1.4, Ammunition and Explosives in Storage.

b. Paragraph 11-8, Storage Requirements for Specific Types of Ammunition.

c. Paragraph 11-9.3, Special Inspections for Magazines Containing Specific Categories of Ammunition and Explosives.

d. NAVSUP P-805, chapter 5, Storage Inspection.

11-9.3. SPECIAL INSPECTIONS FOR MAGAZINES CONTAINING SPECIFIC CATEGORIES OF AMMUNITION AND EXPLOSIVES. The necessity for special or specific inspections shall not be overlooked. The following paragraphs provide special instructions for the inspection of specific categories of ammunition and explosives, not addressed in NAVSUP P-805. Any ammunition and explosives inspections must not exceed the operations permitted in magazines by paragraph 11-3.1.2.

11-9.3.1. Bulk Explosives. Bulk explosives include black powder, high explosives, and initiating explosives. Their inspection shall comply with the following specifications:

a. Black Powder. No periodic tests are required for bulk black powder. However, observation of their containers is necessary to determine serviceability with respect to tightness of the closures, absence of leaky seams, punctures, and serious corrosion.

b. High Explosives. No special inspection required.

c. Bulk Initiating Explosives. Periodic surveillance tests are not required for bulk initiating explosives. However, special tests and microscopic examination should be conducted to ensure their serviceability prior to shipping to another activity or releasing them for production. The inspection of magazines that contain bulk initiating explosives shall be performed on a strict schedule.

11-9.3.2. Bulk Propellants. Bulk propellants include smokeless powder and ballistite.

a. Smokeless Powder. Based on the knowledge that variations in the production, shipment, and storage histories of populations or subpopulations of smokeless powder may have a significant effect on its stability, extensive procedures for continual examination and testing of relatively small population segments were developed and maintained. These tests provide sufficient warning in advance of any smokeless powder deterioration that would create a real or potential safety hazard, permitting the removal of the suspect material from use or storage.

(1) The Quality Evaluation (QE) of smokeless nitrocellulose (NC) and other nitrate-ester (NE) based powder and propellants is based on tests of fume times and stabilizer content from a sample of powder/propellant indexes. The designated field manager for QE of NC/NE based powders and propellants is the Naval Surface Warfare Center Indian Head Division (NSWC IHD). The overall QE program is funded and directed by the Naval Sea System Command (NAVSEASYSCOM) Weapons and Ordnance Quality Evaluation Program Manager (QE/PM) located at the NOSSA.

(2) A special inspection and test of smokeless (NC/NE) powder or propellants shall be made whenever the responsible officer or supervisor considers it necessary due to abnormal or unusual conditions, such as when there is undue heating of magazines or when the powder or propellant is found in a leaky container. The responsible officer or supervisor shall immediately contact the designated field manager for QE of NC/NE based powders and propellants, NSWC/IHD (Code 621F) for directions and/or performance of necessary specialized inspections, tests, and evaluations. If the inspections, tests, or evaluations reveal a deteriorated condition or lack of stabilizer, NSWC/IHD (Code 621F) will provide recommendations or direction to restrict, remove, or treat the questionable material.

(3) If the tests and inspections described in preceding paragraphs reveal the presence of deteriorated grains, the stability of the index of powder shall be considered questionable, and the responsible officer or supervisor shall notify NSWC IHD (Code 621F).

b. Ballistite. Magazines that contain ballistite shall be inspected as specified in paragraph 11-9.3.2.a. In addition, an effort shall be made to detect any excessive odor of NG or stains on the

containers or magazine floor that might be due to exudation or leakage of the NG from the powder grains. Any evidence of leakage shall be reported immediately to the officer or supervisor in charge. Regular periodic inspection/evaluation tests of unassembled ballistite are required only when specifically directed by NAVSEASYSCOM QE/PM.

11-9.3.3. Gun Propellant Charges. Gun propellant charges include separated ammunition charges and separate loading ammunition charges.

a. Separated Ammunition Charges. Magazine requirements for separated ammunition charges are basically the same as those for separate loading ammunition charges.

b. Separate Loading Ammunition. The inspection of magazines that contain separate loading ammunition charges shall comply with the provisions of paragraph 11-9.3.2.a.

11-9.3.4. Gun Ammunition. Gun ammunition includes projectiles, fixed ammunition, and artillery ammunition.

a. Projectiles. No special inspections are required.

b. Fixed Ammunition. Magazine requirements for fixed ammunition are the same as those for smokeless powder and projectiles.

11-9.3.5. Small-Arms Ammunition. Magazines that contain small-arms ammunition shall be inspected to determine if partially filled boxes are securely closed and appropriately marked.

11-9.3.6. Bomb-Type Ammunition. Before storing bomb-type material in magazines, a thorough inspection shall be made to ensure that no detonators are installed, that all ammunition components are placed in a safe condition, and that each ammunition component is stored in the proper magazine. Exudate that has leaked from ammunition is a fire hazard and shall be cleaned from ammunition or floors of magazines by wiping the area with cloths that have been soaked in hot water, rinsing the area in clear water, and then wiping the area dry. All cloths, water, and other cleaning gear shall be removed from the magazine when the work is finished or stopped, and the contaminated material shall be destroyed by burning at the explosives burning ground. Use only tools and instruments, preferably wooden ones, that will not produce sparks or heat while removing exudate. Also refer to paragraph 9-5.7.2 for information on removal of TNT exudate. This material is a hazardous waste and must be disposed of in accordance with all environmental requirements.

11-9.3.7. Rockets and Rocket Components. Rockets, missiles and their components shall be inspected in accordance with the following specifications:

a. Rockets. Rockets are usually stored with their warheads and motors separately packaged and in separate magazines. However, some rockets are packaged with warheads and motors, either assembled or disassembled, in the same package. The inspection requirements for double-based motors are similar to those for ballistite. Composite propellant rocket motors should be inspected in accordance with their technical manuals. Other rocket warheads that have thicker walls and resemble separate loading projectiles shall be inspected as separate loading projectiles. Inert rocket warheads require only visual inspection for external deterioration.

b. Rocket Components. Fuze hole plugs shall be removed quarterly from representative samples to determine that their threads and cavities are in good condition. They should be checked for exudate. In no case shall the base fuze be removed from the warhead during magazine inspection. For tanked

or boxed rocket warheads, a representative number of tanks or boxes shall be opened to carry out the inspection procedure in accordance with paragraph 9-4.7. Care shall be taken to observe and report any evidence of harmful effects due to high temperatures and humidity as described in paragraph 11-2.5.

11-9.3.8. Explosive Initiating Devices, Boosters, and Tracers. Explosive initiating devices, boosters, and tracers shall be given visual inspection to determine if they are properly segregated into identified lots according to type, are enclosed in suitable, tightly closed containers, and are well protected from moisture.

11-9.3.9. Inspection Procedures for Chemical Ammunition. Representative samples of chemical ammunition shall be withdrawn from storage at regular intervals and tested in accordance with PM instructions that apply to the item.

11-9.3.10. Pyrotechnics. Inspectors should check to see that the contents are protected against moisture. Special fire extinguishing agents and equipment, if required, should be examined to ensure that they are readily available and serviceable. Gas masks or other protective equipment, if required, should be available and serviceable. All fire extinguishing equipment shall be maintained in accordance with the specifications of chapter 4.

11-9.3.11. Demolition and Miscellaneous Explosives and Ammunition Items. Magazines shall be inspected to determine that the explosives or items in them are properly stored or marked, and that all containers are closed securely and are in good condition. Any suspect material shall be segregated and disposition instructions shall be requested from the PM.

11-9.3.12. Waste Military Munitions. Waste Military Munitions shall be inspected to the item specific criteria listed above. These inspections must be conducted at least quarterly. Records of the findings of these inspections must be maintained for at least 3 years.

11-10. QUALITY EVALUATION PROGRAMS.

Navy and Marine Corps PM's Direct Reporting Program QE efforts (test and evaluations) are conducted on all in-service material. The QE program shall continuously and/or periodically evaluate (test) the ammunition, ordnance, and/or explosive material to determine and quantify changes in the safety, reliability, and performance characteristics of the stockpile of items. QE findings shall be used by PM's to support maintenance, acquisition, product improvement planning, and stockpile disposition decisions such as restrictions, suspensions, and life/usage limitations. The QE program shall include the evaluation of the ordnance energetic material for continued safety in storage, handling, and use by the test and evaluation of the chemical and structural make-up of the energetic material as well as functional testing to evaluate the reliability and performance aspects of the items. The QE program is intended to evaluate the ordnance in the general stockpile which are in the normal logistics, deployment, and use environments and are not intended to address isolated or activity-unique process situations or materials. The focal point for the QE program is the NAVSEASYSCOM Weapons and Ordnance QE/PM located at NOSSA, Indian Head MD. Marine Corps QE program focal point is PM-AMMO, MARCORSYSCOM located at Quantico, VA.

11-10.1. A primary focus of the evaluation of energetic material shall be the safety of NC and other NE based energetic material, such as smokeless powder in bulk or loaded as propellant, propelling, or explosive charges, which by their basic chemistry can chemically deplete their stabilizer with time, become unstable, and auto-ignite. The QE program shall maintain samples of all in-service NC/NE based energetic material in an evaluation program to detect and/or predict stability failures. Although

other energetic materials are less susceptible to this type of autocatalytic thermal event, certain safety characteristics shall still be evaluated to assure continued safety in storage, use, and handling. The Army has similar programs for their ordnance and energetic materials designs. Activity magazine and storage inspections are not part of the QE Program.

11-11. ACTIVITY INSPECTION AND EVALUATION PROCESS.

Activities that manufacture, receive, store, or provide ammunition, explosives, or other energetic material shall have an inspection and evaluation process to assure that the material is safe. Activities that are involved in manufacturing, acquisition, research, development, testing or other scientific/engineering operations shall inspect, test, and evaluate to at least the level necessary to assure that the material is stable for at least as long as the material is intended to be used or stored. Particular attention shall be directed to the stability of NC/NE-based materials. The activity inspection and evaluation process shall assure that the material is inventory controlled and can be located for reclassification, restriction, or treatment as necessary.

11-11.1. Activities that are involved only in the receipt, storage, maintenance and issue of Navy stock (in-service) ammunition and explosives shall, as a minimum, conduct periodic inspections of ammunition and explosives and apply the restrictions, suspensions, and limitations imposed by NAVSUP P-801 and any NARs issued by the Naval Supply Command Ammunition Logistic Center (NAVSUP NALC).

11-11.2. The evaluation requirements for Navy stock (in-service) ammunition, explosives, and energetic materials can be met through use of the information available from the QE Program, review of NARs, including review of other Services' restrictions programs. Maximum use of information from the QE Program will avoid duplication and conflicting information and can be used in-lieu of or to augment testing in a local evaluation process. Refer to SW020-AE-SAF-010 for QE Program points of contact for individual systems or families of weapons, ordnance, and explosives. The overall focal point for the QE Program is the NAVSEASYSCOM QE/PM located at NOSSA, Indian Head MD.

11-12. INSPECTION OF GOVERNMENT FURNISHED MATERIALS (GFM) PROPELLANTS.

NC/NE based propellants supplied to contractors for use in end item loading must have their stability verified or determined both prior to shipment to the contractor and upon return from the contractor. To meet the GFM return requirement, stability of contractor returned GFM NC/NE based propellant must be determined prior to contractor shipment by sending samples to NSWC/IHD (Code 3330) for testing or certification of private testing results by NSWC/IHD (Code 621F). The testing laboratory shall notify the appropriate PM, receiving activity, NSWC/IHD (Code 621F), and the contractor of the test results. As a minimum, the test criteria for either fume time or minimum stabilizer level, as specified in appendix J of DODINST 5160.65 (series) shall apply. In addition to stability determination, GFM propellant returned from a contractor shall be analyzed to provide a certified analysis of purity/contaminants

CHAPTER 12
LOADING, TRANSPORT, AND TRANSSHIPMENT

12-1. INTRODUCTION.

This chapter covers regulations and requirements for shore station operations involving inspection, loading, unloading, and on-station transportation of ammunition, explosives, and related hazardous materials. NAVSEA SW020-AG-SAF-010 and Department of Transportation (DOT) regulations describe the requirements for in-transit shipments. In addition to the regulations and requirements contained in this chapter, the provisions of the following publications and/or instructions shall be strictly observed during ammunition and explosives handling except when the provisions are specifically waived or obviously inapplicable.

a. 49 Code of Federal Regulations (CFR) §171 to 179, “Hazardous Materials Regulations,” published in Bureau of Explosives Tariff No. BOE-6000 (series);

b. International Civil Aviation Organization Technical Instructions for the Safe Transport of Dangerous Goods by Air;

c. International Maritime Organization International Maritime Dangerous Goods Code;

d. OPNAVINST 8020.14, Department of the Navy Explosives Safety Policy.

e. MCO 8023.3, Qualification and Certification (QUAL/CERT) Program.

f. NAVSEA SW020-AF-HBK-010, Motor Vehicle Driver and Shipping Inspector’s Manual for Ammunition, Explosives and Related Hazardous Materials.

g. NAVSEA SW020-AC-SAF-010, Transportation and Storage Data for Ammunition, Explosives, and Related Hazardous Materials.

h. NAVSEA SW023-AG-WHM-010, On-Station Movement of Ammunition and Explosives by Motor Vehicle.

i. NAVFAC P-300, Management of Transportation Equipment.

j. Military Sealift Command (MSC) Regulations for Ammunition and Explosives.

k. Local Navy Activity Regulations.

l. NAVSEA SW023-AK-SAF-010, Movement and Inspection of Ammunition, Explosives and Related Hazardous Materials by Rail. When regulations are in conflict, 49 CFR 171 to 179 shall apply, and the originator of the conflicting regulation should be notified immediately.

12-2. AMMUNITION PACKAGING AND TRANSPORTABILITY.

Ammunition, explosives and related hazardous materials shall be shipped in approved containers and in accordance with standard unitizing and conveyance loading procedures. Shipping and storage

configurations for Navy approved ammunition items are listed in NAVSEA SW020-AC-SAF-010. The ammunition items listed in that technical manual have been determined to meet Navy and Department of War (DoW) transportation and storage safety requirements as well as federal and international transport safety regulations. The latter regulations include 49 CFR 100-178 and 301-399, the International Maritime Dangerous Goods (IMDG) Code, and the International Civil Aviation Organization (ICAO) Technical Instructions. The Navy Packaging, Handling, Storage and Transportation (PHST) Center located at Naval Surface Warfare Center Indian Head Division (NSWC IHD), Detachment Picatinny, Picatinny Arsenal, NJ is the cognizant activity responsible for establishing packaging design and test requirements, and approving the shipping configuration for Naval ammunition, explosives and related hazardous materials. The packaging approval process verifies the adequacy of the shipping configuration to meet the life-cycle logistical characteristics of each item. The process also ensures compliance with Navy and DoW safety and security requirements, and all applicable federal and international hazardous materials transport regulations.

12-3. GENERAL LOADING REGULATIONS.

12-3.1. GENERAL REQUIREMENTS. Since loading and unloading operations involve handling of ammunition, explosives and related hazardous material, the general handling regulations described in chapter 10 shall be observed. Particular importance is given to the requirement for the use of approved and tested handling equipment and for properly trained and supervised personnel. In addition to the general handling regulations in chapter 10, the general safety regulations in chapter 2 shall be followed.

12-3.2. PROCEDURES AND INSPECTIONS. Procedures and inspections pertaining to loading and transportation of ammunition, explosives and related hazardous material are provided in NAVSEA SW020-AG-SAF-010 and NAVSEA SW020-AF-HBK-010. Topics covered in those publications include inspection requirements, commercial and tactical motor vehicle shipments, railroad shipments, container inspections, cargo compatibility, blocking and bracing, water shipments, air shipments and conveyance storage time. In addition, the following requirements apply:

12-3.2.1. Damaged Ammunition. Any ammunition that is dropped or exhibits damage shall be handled as described in paragraph 10-1.1.

12-3.2.2. Shipping Container Requirements. Containers, including MILVANS, used for the shipment of ammunition and explosives shall be certified in accordance with 49 CFR. Specifically, the requirements prescribed by 49 CFR 173.60 must be met. Questions regarding the adequacy of a shipping container in complying with the requirement of 49 CFR shall be directed to the Naval PHST Center. Hazardous materials, including explosives, shall be transported in containers that will prevent leakage during transport, handling or filling. Containers shall be compatible with hazardous material that is being packaged. It is the responsibility of the person offering the hazardous material for shipment to ensure that the packaging is compatible with its contents. Concerns such as chemical or galvanic reactions, softening, premature aging, embrittlement and permeability should be adequately addressed prior to shipment of a hazardous material on or off station. Containers that are used for the transportation and storage of explosives and explosive mixtures shall be made of materials that will not generate or accumulate static electricity that could cause the explosive to initiate or ignite. In addition, the container shall not permit the accumulation or entry of the packaged explosive substance into seams or recesses in the container.

12-3.2.3. Empty Containers and Spent Rounds. Refer to NAVSUP P-805 for procedures to inspect empty ammunition containers received at shore stations. Upon receipt, all empty containers regardless of their origin must be inspected and managed as outlined in paragraph 11-1.5. For spent rounds received at shore stations, refer to paragraph 13-15 for management and handling requirements.

12-3.2.4. Opening or Repairing Containers. For guidance in opening and repairing containers, see paragraphs 9-4.1.1, 11-1.4, 11-3.1.1.e, 11-3.1.1.f, and 11-3.1.2.f.

12-3.2.5. Loading, Blocking and Bracing. Standard procedures for loading and bracing of ammunition, explosives and related hazardous materials in conveyances shall be used. The requirements of Military Standards (MIL-STD) (Navy) 1320, 1325, and 1386 shall be observed which prescribe motor vehicle, railcar loading procedures, and loading of cargo containers respectively. Training and dummy loads, handling shapes and other inert ordnance items which simulate tactical weapons shall be blocked and braced according to the general principles outlined in MIL-STD-1320. Loading and bracing of hazardous materials (HAZMAT) in dromedary type containers shall be accomplished using the procedures given in U.S. Army Material Command drawing No. 19-48-4252-11Q1000. These procedures either meet or exceed current procedures and could significantly reduce man-hours and costs.

NOTE

As they are updated, both WRs and MIL-STDs will be issued as NAVSEA drawings. The most recently issued loading documents are NAVSEA drawings.

NOTE

Flammable fuel-operated tools are not authorized for use in dunnaging construction for explosives operations.

12-3.2.6. Pneumatic and Battery Powered Nailers. Use of pneumatic and battery powered nailers for prefabricated dunnage construction and installation of dunnaging ammunition, explosives and related hazardous material is authorized under the following conditions:

a. All pneumatic and battery powered nailers must be equipped with a sequential safety device, which prevents rapid fire “touch tip” operation.

b. Pneumatic and battery powered nailers must be equipped with a work contacting element (toenailing adapter) which prevents the tip from slipping during operation by embedding the work surface.

c. All operators must be trained annually in accordance with the instructions provided by the manufacturer for the operations and maintenance of the pneumatic and battery powered nailer and ANSISNT-101-2002.

NOTE

If pneumatic nail gun operators do not handle any explosives and only secure explosives to conveyances, they are not required to be qualified/certified in accordance with OPNAVINST 8023.24 (series). However, they must be closely supervised by qualified/certified personnel. Prior to each evolution using a pneumatic nail gun, the operator will receive a pneumatic and battery powered nail gun handlers safety summary brief.

d. A standard operating procedure (SOP) shall be generated detailing the requirements and procedures for a prior to use safety summary brief, pre-use inspection, maintenance and the safe operation of pneumatic and battery powered nailers.

⚠ WARNING

Nails shall never be driven in the direction of an explosive load.

e. Pneumatic and battery powered nailers may be used for prefabricating and installing dunnage which must be fastened to the conveyance (for example, truck, railcar, intermodal container) prior to the loading of explosives. Once explosives have been loaded, the use of pneumatic and battery powered nailers is restricted to floor blocking with the nails driven vertically into the floor or side blocking with the nails driven at a ninety degree angle into the outside wall.

f. Pneumatic and battery powered nailers may be used to toenail endgate supports in the vicinity of sidewalls only.

g. Pneumatic and battery powered nailers may be used to fabricate dunnage assemblies outside of the conveyance.

h. Pneumatic and battery powered nailers shall not be used to assemble or repair explosive unit loads.

i. Nails with pneumatic and battery powered nailers must be of the same length and size (80, 100, etc.) as specified by the applicable military standard (MIL-STD) dash sheets (NAVY 1320, 1325, 1386, etc.). The slightly smaller diameter of power driven nails requires that additional nails be used. The required number of additional nails is 1/3 more than the specified number of common nails.

j. Nails which protrude through prefabricated dunnage material shall be clinched to eliminate hazard to personnel or material being shipped.

k. Vehicle loading shall be planned and conducted in a manner that provides clear exit paths for operators at all times.

NOTE

When ordnance is present in a shipboard magazine or open hold, the use of pneumatic nailers is strictly prohibited. Pneumatic and battery powered nailers may be used for prefabricating sheathing and dunnage structures in shipboard holds when no ordnance is present.

12-3.2.7. Battery Powered Tools. Battery powered tools are authorized for use in blocking and bracing operations when all of the following requirements are met:

a. Tools are limited to circular saws, jig saws, drills, screwdrivers, nail guns, and reciprocating saws.

b. Maximum battery output shall not exceed manufacturer's rating.

c. Tools shall not be used on any empty or loaded ordnance container.

d. Tools shall not be used aboard the conveyance or in the hold or magazine of a ship during blocking and bracing operations.

e. The use of the tools, battery and battery charging hazards are specifically addressed in the SOP for the ordnance operation being performed.

12-3.2.8. Emergency and Fire Protection. The requirements of chapter 4 regarding fire prevention and protection shall apply.

12-3.2.9. Secure Stowage. No motor vehicle transporting any Hazard Class 1 explosive material may transport as a part of its load any metal or other materials likely to damage the Class 1 material or any package in which it is contained unless the following conditions are met. Different parts of the load shall be segregated or secured in place in or on the motor vehicle and separated by bulkheads or other suitable dunnage to prevent damage to the load if a collision occurs. Refer to paragraph 12-7.3.5.

12-4. PREPARATION FOR SHIPMENT.

Requirements for the preparation of ammunition, explosives and related hazardous material for transportation as described in NAVSEA SW020-AG-SAF-010 and 49 CFR shall apply. These publications present detailed requirements for packing, marking, labeling and placarding of ammunition, explosives and related hazardous materials and discuss shipping documents required for moving this material.

12-5. SHIPMENT OF NON-DOW EXPLOSIVES.

Navy and Marine Corps facilities used for the shipment of explosives are maintained primarily for handling and shipping explosives and other related hazardous material owned or controlled by the Armed Forces of the United States. These facilities must not be exposed unnecessarily to the risk of damage. However, circumstances sometimes arise when the national interest may be served by using Navy and Marine Corps port facilities for the handling and shipment of ammunition, explosives and related hazardous materials that are not controlled or owned by the Armed Forces of the United States. Shipment of non-DoW owned ammunition, explosives and related hazardous material through the U.S. port facilities shall be coordinated through the Naval Ordnance Safety and Security Activity (NOSSA). For the purpose of these regulations, the term “controlled by” refers to “handled or shipped by/for,” and the term “explosive materials” refers to explosives and other hazardous items as described in DOT regulations, 49 CFR 171 to 180 published in the Bureau of Explosives Tariff No. BOE-6000. These include: Hazard Class/Division (HC/D) 1.1, 1.2, 1.3 and 1.4; explosives and related hazardous materials, and fertilizer grade ammonium nitrate. All such materials must meet the safety requirements of this manual while awaiting shipments, during and after loading and offloading, and while awaiting disposition.

12-6. MOTOR VEHICLE/RAILCAR MODIFICATION.

Any material modification, alteration, or addition - permanent or temporary - made to motor vehicles and/or railcars in order to facilitate cargo movements consisting of ammunition and explosives must be approved by NOSSA, working in concert with NSWC IHD, Detachment Picatinny, Navy PHST Center, Picatinny Arsenal, NJ. The requesting agency must also coordinate modifications of this kind in accordance with guidance provided in NAVFAC P-300. This guidance applies only to Navy-owned motor vehicle and railcars.

12-7. MOTOR VEHICLE TRANSPORTATION.

12-7.1. REGULATIONS. All motor vehicle carriers transporting ammunition, explosives and related hazardous material in interstate commerce must comply with the regulations of the DOT established in 49 CFR. Safety requirements governing interstate transportation may be imposed by the individual states and by municipalities through which shipments will move. Navy vehicles transporting ammunition and explosives are subject to Department of Navy regulations as well as all safety regulations applicable to common carriers. For foreign transport of ammunition and explosives, the United Nations (UN) recommendations have been adopted.

12-7.2. SECURITY AND ACCOUNTABILITY. Security and accountability for sensitive conventional arms, ammunition and explosives during the pre-shipping, transportation and delivery evolutions are subject to the requirements in OPNAVINST 5530.13 (series) and the Defense Transportation Tracking System (DTTS).

12-7.3. MOTOR VEHICLE SPECIFICATIONS. Refer to NAVSEA SW020-AG-SAF-010 and NAVSEA SW020-AF-HBK-010 for the specifications for motor vehicles used for off-station shipment of ammunition, explosives and related hazardous materials. Refer to SW023-AG-WHM-010 and NAVFAC P-300 for the specifications for motor vehicles used for on-station shipment.

12-7.3.1. Types of Motor Vehicles and Load Covering. On-station transportation of ammunition and explosives is authorized on stake-bed, open-top, flatbed, and pickup trucks. Every motor vehicle transporting ammunition and explosives off-station must either have a closed body or, for flatbed trailers used to transport long or large containers, have the load covered with a fire and water-resistant tarpaulin. The tarpaulin will be securely fastened to the vehicle by rope or wire tie-down so as to fully protect the vehicle from sparks, fire, and moisture. Tarpaulin requirements also apply to shipments of empty ammunition containers loaded aboard flatbed trailers or tautliner (curtain sided) trailers. Exceptions to the tarpaulin requirement when transporting empty containers are described in NAVSEA SW020-AG-SAF-010, paragraph 5-6.2. Military motor vehicles operating on-station may be exempt from the tarpaulin requirements during clear weather. On-station movements of ammunition and explosives loads aboard Navy-owned open-bed (stake-body, open top, flat-bed) motor vehicles during inclement weather is permitted under the following conditions:

a. That the authorization applies to ammunition and explosives packed in water resistant containers only. The exception does not apply to ammunition and explosives packed in wooden and/or fiberboard boxes, unit loads of palletized aerial bombs, separated and separate loading gun ammunition in skidded unit loads, etc.

b. That the motor vehicle transport phase of the total on-station transfer evolution will be planned in a manner to ensure expeditious execution with minimal delays in transit, no prolonged exposure to the inclement weather conditions, and no overnight parking.

c. That load and offload operations will be planned and conducted in a manner that facilities expeditious handling at origin and destination respectively; and that the ammunition and explosive cargo will be placed inside the shelter of the receiving facility (magazine, operating building, ship, alternate conveyance unit, etc.) with comparable dispatch. Transfer operation planning must take into account time allotted for employee lunch and morning and afternoon work breaks.

d. Station written operating procedures to be followed during electrical storms will be strictly enforced. On-station ammunition and explosive transfer operations planning must also allow for this

inclement weather contingency. See NAVSEA SW020-AG-SAF-010 and NAVSEA SW020-AF-HBK-010 for guidance on load covering.

12-7.3.2. Routine Vehicle Inspections. Navy-owned motor vehicles used for the transportation of ammunition, explosives and related hazardous materials shall be inspected at frequent, regular intervals by a competent person to ensure that the mechanical condition of the vehicles is satisfactory, and all parts and accessories for safe operation are in good working order. Daily vehicle inspections shall be made to determine that:

a. Fire extinguishers are filled, sealed, securely mounted, and in good working order.

b. Electric wiring is in good condition and properly attached.

c. Fuel tanks and piping are secure and not leaking.

d. Brakes, steering, lights, horn, and other equipment are in good condition. Refer to NAVSEA SW020-AG-SAF-010, NAVSEA SW020-AF-HBK-010, and NAVSEA SW023-AG-WHM-010 for other inspection criteria.

e. Special precautions shall be taken to avoid ignition of explosives or vapors by the exhaust of motor vehicles. The motor vehicle shall be equipped with an effective spark and flame-arresting device in the exhaust line. The exhaust system must be kept clear and uninhibited, and must not come in contact with any combustible material such as boxes or tarpaulins. A standard commercial exhaust system maintained in good condition satisfies this requirement. Refer to NAVFAC P-300 and NAVSEA SW020-AF-HBK-010 for guidance.

12-7.3.3. Additional Motor Vehicle Safety Precautions. The following safety precautions also apply:

a. Vehicles shall be operated with the same safety restrictions applicable to all motor vehicles with internal combustion engines.

b. In addition to daily pre-operational inspections, all motor vehicles shall be checked upon initial receipt and at intervals not to exceed 12 months or 12,000 miles, whichever occurs first. To avoid unnecessary downtime, the safety inspection shall be performed in accordance with NAVFAC P-300 at the time of the manufacturer's recommended service and reliability inspection. This will ensure the engine is performing properly and meets the manufacturer's engine tune-up specifications.

c. All motor vehicle operators shall be instructed to return vehicles with rough running engines to the vehicle maintenance facility for corrective action. Explosives-laden vehicles shall be offloaded before proceeding to the maintenance facility.

d. Motor vehicles are prohibited from being operated within 100 feet of fuel storage areas and transfer operations, except service stations, where low-lying accumulations of flammable vapors from hazardous sources are present. In addition, vehicles shall not be parked over any grassy area or unpaved surfaces that may be oil soaked.

12-7.3.4. Electrical System. Batteries and wiring shall be located so they will not come into contact with containers of ammunition, explosives or related hazardous materials. Refer to NAVSEA SW020-AG-SAF-010 for guidance on authorized lights in van trailers when hauling Navy explosive ordnance.

⚠ WARNING

Plastic bedliners generate static electricity and are not authorized for use in the transport of scrap or bulk explosives in any container nor for the transport of any ammunition, explosives or related hazardous material that is not packaged in its approved shipping container.

12-7.3.5. Cargo Space. If the vehicle is used to transport scrap or bulk explosives, the cargo space shall be covered in wood or other material which will not produce sparks or static electricity. If drop-in or sprayed-on plastic bed linings are used to transport ammunition and explosives, ammunition items shall be packaged in approved shipping containers that will prevent the escape of explosive dust, material, etc. and protect from initiation by static electric discharge. There shall be no protruding nails, screws, bolts, or any other object that could damage the cargo. Stake, open-top, or pickup trucks shall have side, end members, and tailgates strong enough to securely contain the ammunition, explosives and related hazardous material under existing road conditions and they shall be installed prior to vehicle movement. All ammunition, explosives and related hazardous material shall be secured by blocking and bracing and/or tie-downs prior to vehicle movement. Special care shall be taken to secure all cargo in vehicles with plastic bed liners because of the slippery nature of the liner surface. Refer to NAVSEA SW020-AG-SAF-010 for cargo space requirements.

12-7.3.6. Placards. Motor vehicles transporting ammunition and explosives on-station shall conspicuously display placards required by DOT regulations, and specified in NAVSEA SW020-AG-SAF-010. The required placarding of the front of a motor vehicle may be displayed on the front of a truck-tractor or trailer instead of or in addition to the placarding on the front of the cargo body to which a truck-tractor is attached, and shall be clearly visible from the direction it faces when approaching the vehicle. The front placard for a motor vehicle may be displayed on the front of the truck body, truck tractor or the trailer and shall be clearly visible when approaching the vehicle from the front. The placards shall be attached so that they can be removed or covered whenever the vehicle is not loaded with ammunition or explosives. Vehicles engaged in towing explosive-loaded bomb trailers shall display appropriate placards or a red flag.

12-7.3.7. Fire Protection.

a. Each motor vehicle loaded with ammunition, explosives and related hazardous material shall be equipped with one fully charged Underwriters Laboratory (UL) rated 10 B:C or greater capacity, securely mounted fire extinguisher that is readily accessible.

b. When all stocks of extinguishers filled with carbon dioxide (CO_2) are exhausted, use of a Purple-K (PKP), dry chemical extinguisher is required. The PKP dry chemical extinguisher is stocked under NSN 9C 4210-00-808-4544. Halon 1211 portable fire extinguisher shall not be used.

12-7.3.8. Fuel Type Restriction. Motor vehicles using compressed natural gas (CNG), liquid petroleum gas (LPG), propane, or butane for propulsion may be used for transporting ammunition, explosives and related hazardous materials under certain conditions in accordance with NAVSEA SW020-AG-SAF-010, NAVFAC P-300, and DOT requirements. Changes or modifications to original vehicle design must be reviewed and approved by the Transportation Equipment Management Center, Naval Facilities Engineering Systems Command, Atlantic Division (Code 12); see paragraph 12-6.

12-7.4. MOTOR VEHICLE INSPECTIONS. Motor vehicles used for the shipment of ammunition, explosives and related hazardous materials shall be inspected in the following manner prior to loading and unloading.

12-7.4.1. Pre-Loading Inspection.

a. All motor vehicles to be used for transporting ammunition, explosives, and other hazardous materials over public highways shall be inspected using Motor Vehicle Inspection (Transporting Hazardous Materials), DD Form 626, for compliance with safety regulations listed on the form. Refer to NAVSEA SW020-AG-SAF-010 and NAVSEA SW020-AF-HBK-010 for guidance on completion of DD Form 626.

b. On station pre-loading inspection shall be completed for naval motor vehicles in accordance with NAVSUP P-805 and NAVSEA SW023-AG-WHM-010. These references should assist activities in the development of local naval motor vehicle pre-loading forms.

12-7.4.2. Loaded Vehicle Inspection.

a. Origin. A loaded vehicle must be inspected prior to its release for movement. The applicable portion of DD Form 626 shall be completed in accordance with NAVSEA SW020-AG-SAF-010 and NAVSEA SW020-AF-HBK-010.

b. Destination. Upon receipt at an activity, an external inspection of any motor vehicle containing ammunition, explosives or related hazardous materials shall be made at a designated location prior to routing within the installation. When commercial carriers are employed to move ammunition, explosives and related hazardous materials over public highways from one area to another area of an installation, an external inspection of the vehicle shall be made before it enters the second area. Any vehicle suspected of being in a hazardous condition shall be moved to the suspect vehicle site for further inspection. If there are violations, qualified traffic management personnel must take appropriate action to have the violations corrected. Refer to NAVSEA SW020-AG-SAF-010 and NAVSEA SW020-AF-HBK-010 for motor vehicle inspection guidance.

12-7.4.3. Unloaded Vehicle Inspection Prior to Release. After unloading, all dunnage, placards, seals, seal notices and debris shall be removed from motor carrier equipment. An inspector shall verify by 100% inspection that the motor vehicle is free of all loose ammunition, explosives, related hazardous materials, flammable materials, placards, seals, and seal notices before it is released.

12-7.5. MOTOR VEHICLE OPERATING REQUIREMENTS. The operation of motor vehicles within Naval and Marine Corps shore activities and on public highways shall be in accordance with NAVSEA SW020-AG-SAF-010, SW020-AF-HBK-010 and as further qualified by this manual. These publications provide Navy policy on explosive driver qualifications, driver instructions, qualified representatives, off-station operators, and on-station riders.

12-7.5.1. Vehicle Chocking and Brake Setting. When loading/unloading cargo from a truck, trailer, or cargo container on a chassis or trailer, the brakes shall be set and the wheels chocked. Approved chocks may be procured from commercial sources provided they meet the requirements of SAE J348 or may be locally fabricated in accordance with NAVSEA Drawing 2642779. The requirement for wheel chocks may be omitted during loading and unloading operations of MILVAN/ISO containers provided the following safety conditions are adhered to:

a. Prior to the start of any operation, the location where the vehicle is to be positioned must be identified and marked (for example, paint or traffic cones).

b. Vehicle must be parked with parking brake engaged, and must remain in stationary position throughout the MILVAN/ISO container loading and unloading operation. During such operations, the vehicle will be moved only when the MILVAN/ISO container rests firmly on the chassis or flatbed trailer and is locked in place. At that time, the driver will then move the vehicle only when given clearance to do so by the responsible ground crew personnel.

NOTE

Activities that do not have cranes capable of properly aligning containers onto pre-positioned motor vehicles, may be permitted to move the vehicle to position or set the container load onto the chassis or flatbed trailer. The driver will only move the vehicle when given clearance to do so by the responsible ground crew personnel.

c. The driver must be seated in the cab and remain in full control of the vehicle throughout the loading and unloading operation. The vehicle engine may be kept running during the operation.

d. A local SOP will be generated containing these requirements, training requirements, as well as other station unique requirements and must by approved by the activity's commanding officer.

12-7.5.2. Refueling. Vehicles engaged in handling dangerous cargo shall be refueled prior to commencing loading operations. If refueling is necessary prior to offload, the driver shall be responsible for observing the specific safety precautions of paragraph 4-1.24 and NAVSEA SW020-AF-HBK-010.

12-7.5.3. Vehicle Operations in Magazine Areas. When transporting explosives and ammunition from magazines containing black powder, bulk propellants, propelling charges/cartridges, the motor shall be turned off before the magazine doors are opened.

12-7.5.4. Vehicle Operations on Piers and Wharves. Motor vehicles entering a pier or wharf shall be in good mechanical condition, operated only as required, and remain no longer than necessary. When feasible, motor vehicles shall be parked headed toward the exit of a pier or wharf with the motor turned off and the ignition keys in the switch. Motor vehicles loaded with explosives shall not move onto a pier or wharf until immediately before the start of the workday and moved off the pier or wharf immediately after unloading or by the end of the workday.

12-7.5.5. Towed Conveyances. Leased vehicles, while transporting A&E in the public domain, are prohibited from towing any type of light conveyances, such as a generator or a cart.

12-7.6. VEHICLE TRANSPORTATION OF LIMITED QUANTITIES OF AMMUNITION AND EXPLOSIVES. Limited quantities of ammunition and explosives may be transported exempt from the usual restrictions required by this manual under the following conditions:

12-7.6.1. Limited Quantities of Ammunition and Explosives. Limited quantities of HC/D 1.1, 1.2, 1.3 and 1.4 ammunition and explosives may be transported on and off-station in government vehicles exempt from the customary compatibility restrictions required by this manual. Such movements are subject to the provisions of paragraph 12-7.6.1.1 and 12-7.6.1.2 below. Loading and dunnaging

requirements for on and off-station movements must comply with NAVSEA SW023-AG-WHM-010 and Navy MIL-STD-1320 (series) respectively. These movements shall be performed in accordance with an approved activity SOP. Drivers qualifications, training and licensing requirements shall adhere to paragraph 2-2 of NAVSEA SW020-AF-HBK-010.

12-7.6.1.1. Explosive Compatibility.

a. HC/D 1.1 through 1.3 explosives shall not be loaded with chemical ammunition containing incendiary charges or white phosphorus with or without bursting charges.

b. No cargo other than the explosives or ammunition involved and their necessary accessories such as firing cables, tools, magnetos, instruments, and gauges may be hauled in a single vehicle. Any necessary accessories must be adequately secured to prevent contact with the explosives.

c. No detonator assembly or booster with detonator may be transported on the same motor vehicle with any HC/D 1.1, 1.2 or 1.3 material (except other detonators, detonator assemblies or boosters with detonators), explosives for blasting or detonating cord, or HC/D 1.4 material. The provisions of 49 CFR 177.835 apply to any shipment moving on public roads on and off base.

12-7.6.1.2. Explosive Weights. The total net explosives weight of all high explosives (HC/D 1.1, 1.2.1 and 1.2.2) in a single load must not exceed 200 pounds, unless a single ordnance item exceeds this weight.

12-7.6.2. Limited Quantities of Small Arms Ammunition. On a case-by-case basis, the Commanding Officer/Officer-in-Charge of the small arms ammunition may authorize the transport of limited quantities of small arms ammunition, HC/D 1.4S, except .50 caliber, using privately owned vehicles (POV), leased or government vehicles as detailed in NAVSEA SW020-AF-HBK-010 paragraph 2-7.4.1. Refer to NAVSEA SW020-AG-SAF-010 for guidance on permissible operating distances.

a. For small arms ammunition, these movements are restricted to transportation between ammunition issue points and facilities for marksmanship training, qualification, competition, or other related requirements. While in transit, the ammunition must be in the custody of designated military or security personnel. A DoD Form 1907, Signature and Tally Record, and a DD Form 2890, DoD Multimodal Dangerous Goods Declaration, shall be issued to the custodian personnel. The ammunition must be under constant surveillance during stops enroute to destination. Vehicles are subject to the load limit criteria indicated in paragraph 12-7.6.2.1 below. Full-package quantities of ammunition must be packaged in sealed MIL-SPEC wooden or wirebound wooden boxes. Less than full package quantities must be transported in sealed MIL-SPEC inner containers such as M1, M2, or M19 series metal containers.

b. For small arms ammunition, the packages must be secured in the cargo compartment to prevent lateral movement. The cargo compartment must be equipped with a locking mechanism. The vehicle must also be equipped with one serviceable fire extinguisher. The driver must possess a valid state driver's license. If government vehicles are used, drivers must also possess a Government Motor Vehicle Operator's Identification Card, OF-346. When movement is by POV, a valid state drivers license is sufficient for both civilian and military drivers. Activities must communicate proof of authorization to transport small arms ammunition via POV, leased, or government vehicle(s) to the Navy Munitions Command/ammunition supply point(s) prior to arrival to coordinate safe ammunition transfer. Under these particular circumstances, the explosives driver training criteria presented in NAVSEA SW020-AF-HBK-010 chapter 2 are not applicable.

c. Military drivers who transport a ship's crew training ordnance to or from ranges for Ship's Crew Small Arms certification training only in a POV, are not required to be designated as an explosive driver, nor will explosive driver requirements be levied upon them. Only a ship's designated driver will serve as the military driver to transport the training ordnance to or from the training range. Military drivers shall not transport more than 20,000 rounds of Ship's Crew Small Arms training ammunition per day. Military drivers shall not transport both Ship's Crew Small Arms training ammunition and small arms in the same vehicle.

d. A motor vehicle inspection is required using either the Motor Vehicle Inspection Report DD Form 626, Operator's Inspection Guide and Trouble Report, NAVFAC 9-11240/13 or Vehicle and Equipment Operational Record NAVMC 10627 for these Ship's Crew Small Arms training ammunition movements.

12-7.6.2.1. Small arms gross cargo weight limitations:

Vehicle Type	Gross Cargo Weight
Sedan	200 lb
Van	250 lbs
SUV	250 lbs
Pick-up	300 lbs

12-7.6.3. Safety of Life at Sea (SOLAS) Materials. On a case-by-case basis, Commanding Officers/ Officer-in-Charge of the SOLAS material may authorize the transport of limited quantities of SOLAS materials using privately owned vehicles (POV), leased or government vehicles. A description of approved SOLAS items and performance criteria may be found in the "Guideline for United States Coast Guard (USCG) Approval of SOLAS Pyrotechnic Signal and Line-Throwing Appliances" dated March 2005.

a. For SOLAS materials, these movements are restricted to transportation between ammunition issue points to pierside for maintaining aboard ships and small craft. In support of outlying airfield operations, aircrew vest movements are restricted to transportation between the aviation life support shop and aircraft location. While in transit, the SOLAS material must be in the custody of designated personnel. The materials must be under constant surveillance during stops enroute to destination and must be packaged in the original container/kits provided by the manufacturer or properly installed in flight gear by qualified aviation life support system (ALSS) personnel. The driver must possess a valid state driver' license. If government vehicles are used, drivers must posses a Government Motor Vehicle Operator's identification Card, OF-346 (NAVFAC P-300, paragraph 3-8). When movement is by POV, a valid state driver's license is sufficient for both civilian and military drivers. Under these circumstances, the explosives driver training criteria described in NAVSEA SW020-AF-HBK-010, chapter 2, are not applicable.

b. A motor vehicle inspection is required using either the Motor Vehicle Inspection Report DD Form 626, Operator's Inspection Guide and Trouble Report, NAVFAC 9-11240/13 or vehicle and Equipment Operational Record NAVMC 10627.

12-7.7. COMMERCIAL CARRIER SHIPMENTS ON STATION. Military installations shall not be used as transfer or interchange points by commercial carriers in the normal routing of ammunition or explosives except as specified in NAVSEA SW020-AG-SAF-010.

12-7.7.1. Trailer Relocation Agreement. When warranted by operational necessity or to facilitate on-station loading and offloading operations, Navy-owned tractors may be used to move or relocate commercially-owned trailers. NAVSEA Form 8023/1, "Agreement for On-Station Relocation of Commercial Trailers", will be properly executed to accommodate such movements. Details for the use of NAVSEA Form 8023/1 are discussed in NAVSEA SW020-AG-SAF-010.

12-7.7.2. Parking for Explosives-Loaded Commercial Vehicles.

12-7.7.2.1. Secure Holding Areas. This is an area designated for the temporary parking of commercial carriers' motor vehicles transporting DoW-owned Arms, Ammunition, and Explosives (AA&E), classified (SECRET or CONFIDENTIAL) materials, and Controlled Cryptographic Items (CCI). These areas will provide secure storage for commercial carriers while in transit, or during emergencies or other circumstances that are beyond a carrier's control. The two types of secure holding areas, as described below, are applicable to areas (CONUS, Hawaii, Alaska, and Puerto Rico) governed by chapter 205 of DTR 4500.9-R (Part II, Cargo), Defense Transportation Regulation (DTR).

NOTE

This safety standard does not impose a requirement for activities to have secure holding areas, outside of the temporary parking requirements identified in paragraph 12-7.7.3.

a. Secure Explosive Holding Area. Site as a holding yard, as defined in paragraph 7-12.2, with respect for all quantity-distance (Q-D) separation and lightning protection requirements. A secure explosives holding area can be used to meet the requirements in paragraph 12-7.7.2.2 for a safe haven. The area must be under constant surveillance, or be equipped with intrusion detection systems (IDS)/closed circuit television (CCTV).

NOTE

Facilities sited as safe havens by NOSSA (previously NOC or NAVSEA), that do not meet Q-D and lightning protection requirements, cannot be used as a secure explosives holding area, or entered in Military Surface Deployment and Distribution Command (SDDC) Pamphlet 385-1.

b. Secure Non-Explosives Holding Area. No siting required if located outside all explosives safety quantity-distance (ESQD) arcs. If located within an ESQD arc, it must be located outside public traffic route distance of any potential explosion site (PES). The holding of HC/D 1.4S materials is permitted at these areas without regard to Q-D. The area must meet the physical security criteria specified in chapter 205 of the DTR.

12-7.7.2.2. Safe Havens. Commanding officers and officers in charge of Navy and Marine Corps activities in CONUS, Hawaii, Alaska and Puerto Rico shall grant temporary safe haven or refuge to DoW AA&E or other sensitive items. Such assistance may be in response to shipments threatened by civil disturbance, natural disaster, vehicle breakdown, driver illness or other emergent contingencies, as described in NAVSEA SW020-AG-SAF-010 or the DTR, chapter 205. To the extent possible, the

compatibility restrictions, and Q-D and lightning protection requirements of this manual will be observed. Site approval should be requested from NOSSA in accordance with chapter 8 when a site is pre-selected to ensure maximum compliance with explosives safety criteria.

12-7.7.3. Temporary Parking. All Navy and Marine Corps activities engaged in receiving, storing, and issuing ammunition and explosives shall establish a program for parking explosives-loaded commercial vehicles as described in NAVSEA SW020-AG-SAF-010. If vehicle holding areas are used to meet this requirement, they must meet the Explosives Safety Quantity Distance (ESQD) requirements of chapter 7 of this manual for (at a minimum) the greatest hazard classification of material handled on-station as well as lightning protection requirements and applicable security requirements.

12-7.7.4. Vehicle Spotting. The temporary parking requirements for railcars specified in paragraphs 12-8.3.4.c through 12-8.3.4.i are applicable to vehicles involved in loading/unloading operations.

12-8. RAILROAD TRANSPORTATION.

Railroads within a Navy or Marine Corps shore establishment shall be operated in accordance with the following requirements.

12-8.1. RAILROAD EQUIPMENT REQUIREMENTS. NAVFAC P-301 provides details on railroad equipment maintenance and railroad operations. DOT and Association of American Railroads (AAR) safety regulations pertaining to safety devices, safety guards, design of equipment, and the like are mandatory for carrier-owned railway equipment used to transport ammunition and explosives on Navy and Marine Corps shore establishments. Since most Navy owned on-station railcars are obsolete equipment and are not used in interchange or off-station service, they are exempt from DOT requirements regarding spark shields, roller bearings, safety devices, etc., but must meet the requirements of NAVSEA SW023-AK-SAF-010. If used for interchange or off-station service, all DOT and AAR regulations shall be met. Equipment requirements for trackage and grade crossings are covered in paragraphs 8-7.1 and 8-7.2. In addition, the following operational requirements apply to railroad facilities and equipment.

12-8.1.1. Locomotives. All locomotives shall be equipped with “dead man” controls. Locomotives and other self-propelled rail vehicles used within Navy and Marine Corps shore activities shall be designed and equipped to prevent the starting or communicating of fires. Diesel or gasoline powered and other self-propelled rail vehicles shall have spark arresters properly installed on exhaust stacks. The spark arrestors shall be adequately maintained. Portable fire extinguishers, preferably carbon dioxide extinguishers, must be carried on all locomotives and self-propelled vehicles. Locomotives or rail equipment shall be painted in accordance with current directives to increase their visibility.

12-8.1.2. Railways. Periodic surveys of road beds, sleepers, rails, spikes, switches, signals, derails, bumpers, and the like should be made at least once every 3 years. Where the system is electrified or grounded, inspection for proper bonding and grounding of rails should be included in the surveys. Grass and brush along railroad right-of-ways that present a fire hazard shall be controlled.

12-8.1.3. Signs and Signals. Suitable types of switch target lights that are visible to switch crews working at night shall be used. Hand signal lanterns shall be an approved electric type.

12-8.1.4. Railcar Marking.

a. Blue Flag. When personnel are working in, on or under railroad cars, blue flags or signals shall be placed at both ends of a car or cut of cars if both ends are open or at the end of a car or cut of cars

at the open end of a railway spur. Blue flags or signals also shall be placed at both ends of tank cars when they are connected for loading or unloading. The car or cars shall not be coupled or moved while the flags are displayed. The supervisor in charge of the personnel who are loading or unloading the car or cars shall be responsible for placing and removing the blue flags or signals. Train crews shall be informed of all installation regulations relative to the use of the blue flags or signals.

b. Placarding. Appropriate placards as required by 49 CFR 172.508 and 172.510 regulations shall be displayed on all station or commercial railcars containing ammunition or explosives whether or not they are on station property. Railcars loaded with ammunition or explosives must be placarded prior to being moved. All placards shall be removed from empty railcars before the railcar is released following unloading operations.

c. Blocking/Bracing Certification Tags. All Navy activities with railroads will use Blocking/Bracing Certification Tags, figure 12-1, to provide positive assurance to railroad crews that explosive-laden railcars are safe for movement. A properly completed and signed Blocking/Bracing Certification Tag affixed to a railcar certifies that the railcar's explosive load has been properly blocked and braced in accordance with NAVSEA SW023-AK-SAF-010 for on station movement. All Navy activities shall:

(1) Locally fabricate Blocking/Bracing Certification Tags. Blocking/Bracing Certification Tags shall be locally fabricated in accordance with the specifications provided in figure 12-1.

(2) Ensure that tag is properly completed by the blocking/bracing crew chief.

(3) Upon confirmation that the explosive load has been properly blocked and braced, ensure that the “Certified By” line is signed by either the blocking/bracing crew chief or the inspector (if the activity employs a blocking/bracing inspector).

(4) Ensure that the local activity implementing the SOP specifies who is authorized to certify that the load has been properly blocked and braced.

(5) After the tag has been properly completed and signed, ensure that it is fixed to the outside of the car in a standard location selected by the activity and specified in the implementing SOP.

(6) Ensure that train crews do not couple to a car or cars, or move a car or cars without first verifying that each car has a properly completed and signed Blocking/Bracing Certification Tag.

(7) Provide annual training to all train crews and blocking/bracing crews on the procedures used by the activity to implement this NAVSEASYSCOM policy.

DESCRIPTION: The Blocking/Bracing Tag is a 3-inch by 5-inch tag made of white weather-proof paper. It iscovered by a piece of laminating material attached to the tag, along the left short edge. This tag has a protective backing, which when peeled off and pressed to the tag, seals ink or felt tip pen entries against the weather. A grommet hole in the middle of the left edge provides a means of using wire to attach the tag to a railcar. Shown below are the front and the back of the tag. Lettering is in ¼" high, bold black.

BLOCKING/BRACING CERTIFICATION TAG

EXPL WEIGHT (LBS., APPROX) _____

CERTIFIED BY _____

DATE CERTIFIED _____

ADDITIONAL INFO._____

_____

Front of Tag

POSTING OF THIS TAG AND

CERTIFICATION BY SIGNATURE,

SIGNIFIES LOAD HAS BEEN PROPERLY

BLOCKED AND BRACED

FOR ON -STATION MOVEMENT.

Back of Tag

Figure 12-1. Blocking/Bracing Certification Tags

(8) Continue to use blue flags in accordance with subparagraph a., above, and in conjunction with the Blocking/Bracing Certification Tag.

(9) Use the “Additional Info.” line as determined by the activity.

(10) Continue to use the old Movement Certification Tags until they have been exhausted.

12-8.2. RAILCAR INSPECTIONS. Railcars used for the shipment of explosives or ammunition off-station shall be inspected in the following manner prior to loading or unloading.

12-8.2.1. Pre-Loading Inspection. All railcars to be used for HC/D 1 through 3 materials shall be inspected in accordance with items 1 through 13 of the Railroad Car Inspection Report, NAVSEA Form 8023/3. Refer to NAVSEA SW023-AK-WHM-010SW023-AK-SAF-010 for further details regarding the applicability and use of the NAVSEA Form 8023/3.

12-8.2.2. Loaded Railcar Inspection.

a. Origin. A loaded railcar shall be inspected in accordance with NAVSEA SW023-AK-WHM-010 upon completion of loading operations and prior to release for transit.

b. Destination. An external inspection of any railcars containing ammunition or explosives shall be made at a designated location after receipt from the delivering carrier and prior to further routing within the installation. When commercial carriers are employed to move ammunition and explosives from one area to another area of an installation over public railroads, an external inspection of the railcar shall be made before it enters the second area. Any railcar suspected of being in a hazardous condition shall be removed to the suspect railcar site and appropriate action shall be taken. Refer to NAVSEA SW023-AK-WHM-010SW023-AK-SAF-010 for additional requirements concerning railcar inspections at the destination.

12-8.2.3. Inspection of Outgoing Unloaded Railcars. All dunnage and debris shall be removed immediately from the railcar upon completion of unloading. The inspector shall verify by 100% inspection that the railcar is free of all loose explosives and flammable materials. Placards, seals, and seal notices shall be removed from the railcar before it is released.

12-8.3. RAILROAD OPERATING REQUIREMENTS. The following railroad operating requirements which are detailed in NAVFAC P-301 and those provided in NAVSEA SW023-AK-WHM-010 for on-station movements shall be met.

12-8.3.1. Crew Size and Qualifications. All trains hauling ammunition and explosives at any Navy or Marine Corps activity shall be operated by a crew consisting of at least three people: engineer, breaker-switcher and conductor. The commanding officer may assign more than three people to enhance safety. Railroad operations that have a Remote Control Locomotive (RCL), approved under the parameters of NAVSEA SW023-AK-WHM-010SW023-AK-SAF-010, are authorized a two person crew for use in switching yard operations, providing individuals maintain certification and qualifications in accordance with 49 CFR part 240. Engineers, conductors, braker-switchers, dispatchers and train inspectors shall be trained and qualified in accordance with NAVFAC P-301.

12-8.3.2. General Operating Rules.

a. When railcars containing ammunition, explosives, or other hazardous materials are received at an establishment or held in yards, precautions shall be taken to prevent accidents, particularly during night operations. These precautions shall include provisions for quickly removing and isolating railcars in case of fire.

b. Carrying hazardous materials on locomotives or self-propelled rail vehicles is prohibited.

c. No empty railcars shall be removed from warehouses, magazines, buildings, or transfer depots until all warning placards have been removed. (See paragraph 12-8.2.3.)

d. Personnel should be alert at all times to detect defective or unserviceable track or equipment. Personnel also should be suspicious of unusual conditions or any condition that may endanger the operation, and should report such conditions promptly to the proper officials.

e. Signs shall be placed at locations where the side and overhead clearance of the train is close. Personnel must not stand on the track in front of an approaching locomotive or car to board it and shall not ride on top of a railcar.

f. All trains and locomotives must be run carefully during and after heavy storms, particularly where tracks may be affected. When fog, storms, or other conditions obscure the track, the speed of the train must be reduced to permit strict observance of rules and to ensure safety.

g. Locomotives shall approach grade crossings under full control. The speed of the locomotive shall not be more than 10 miles per hour while making the crossing, unless a traffic engineering study has determined and documented a higher speed to be safer. When a locomotive approaches a grade crossing, the whistle shall be sounded, and the bell rung continuously until the locomotive has cleared the crossing.

h. Trains and locomotives shall be fully protected against any known conditions that may interfere with safe operation.

i. Unauthorized persons shall never be permitted as passengers on locomotives and trains.

j. Locomotives shall be equipped with spark arrestors properly installed on the exhaust stacks. These devices should be cleaned frequently and maintained in effective condition at all times.

k. Locomotives shall not remain in front of buildings containing ammunition or explosives any longer than is necessary to position railcars for loading and unloading operations.

12-8.3.3. Railcar Movement.

a. Locomotives not equipped in accordance with the requirements of paragraph 12-8.3.2.j shall approach no closer than 50 feet to buildings where ammunition or explosives are stored, or where operations with explosives are in progress unless doors, windows, and other openings in the building facing the track have been closed.

b. Before railcars are moved by a locomotive, the car doors shall be closed and the brake hose coupled and tested to ensure that the air brakes are in proper working condition. Special care shall be taken to avoid rough handling of cars. Dropping, humping, picking, and using the flying switch are prohibited.

c. During on-station transfers involving the movement of cars by locomotives, partially and completely-loaded cars shall be blocked and braced sufficiently to prevent movement or shifting of the load. The car doors shall be closed when cars are moved by a locomotive.

d. When transfer movements are made at night, a member of the train crew shall take a position on the leading end of the lead car and display a light.

e. While moving a railcar with a railcar mover, someone shall be stationed at the hand brake.

f. Cars shall not be “cut off” while in motion and shall be coupled carefully to avoid unnecessary shocks. Other cars shall not be “cut off” allowing them to strike a car containing explosives.

g. All movements in the classification yards are considered switch movements, and all movements outside the classification yard are considered transfer movements. Before moving a car containing explosives or other hazardous materials and before making transfer movements regardless of the contents of a car or cars, all air hoses shall be coupled and the air-brakes shall be cut-in and be in proper working order. Cars shall not be uncoupled while in motion and shall not be pulled apart by locomotive power. Proper safety precautions shall be observed in breaking air-hose connections.

h. Any railcar displaying a blue flag, as described in paragraph 12-8.1.4.a, shall not be coupled or moved.

12-8.3.4. Railcar Spotting.

a. When single railcars are spotted, the handbrakes shall be set and wheels chocked with two chocks, one on either side of the same set of wheels. See figure 12-2. The railcar is improperly chocked if motion in either direction is possible. Railcars containing explosives on piers and wharves do not require chocking but shall be placed as described in subparagraph h below. When more than one car is spotted and the locomotive is detached, the hand brakes shall be set on a sufficient number of cars to assure that ample breakage is provided. The hand brakes shall be set on the downgrade end of the cut of cars and the wheels properly chocked. Approved chocks may be procured from commercial sources or may be locally fabricated in accordance with NAVSEA Drawings 2642778 or 6213010.

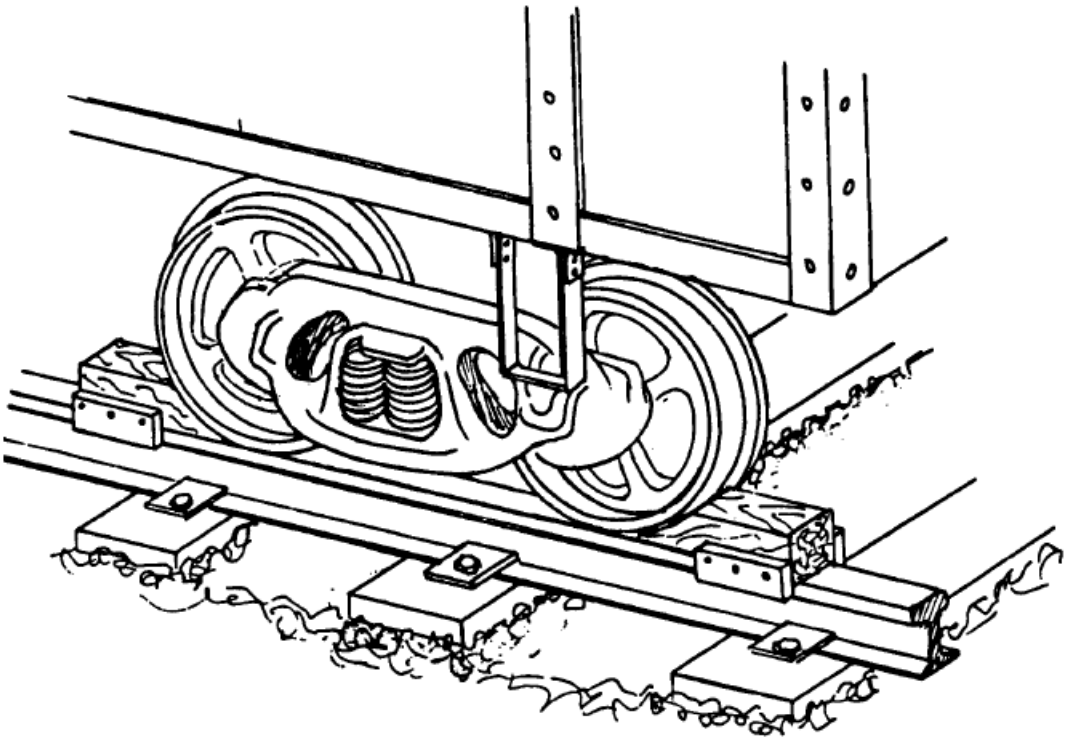

Figure 12-2. Proper Railcar Chocking Method

b. Locomotives shall not be left in front of buildings or docks that contain ammunition or explosives longer than is necessary to “spot” railcars for loading and unloading. Railcars spotted at buildings should be located so that employees in the buildings will not have to run the length of the buildings to evacuate if an emergency arises.

c. Loaded railcars shall not be left in open areas between magazines because they may act as an intermediate step in spreading an explosion or fire from one magazine to another.

d. Two loaded railcars containing ammunition or explosives may be left temporarily in front of magazines at night when the combined NEW of the cars and the magazine does not exceed the authorized explosive limit for the magazine. These railcars shall be moved or unloaded the following work day.

e. Unless it is sealed or padlocked, a railcar partially or completely loaded with ammunition or explosives shall not be left unattended after work hours or after work is completed in the railcar. This applies to railcars located on all activities having standard security measures as well as those in unprotected areas. Exceptions to this rule apply to flatcars used in accordance with NAVSEA SW023-AK-WHM-010 or railcars parked inside a Type M magazine.

f. Railcars being loaded or unloaded may be parked in Type M magazines for the length of time required to conduct the operation, including one workday proceeding and one work day following the operation. At no time can the combined NEW of the railcar and magazine exceed the authorized explosives limit for the magazine.

g. All other loaded railcars shall be placed in either holding or classification yards where they shall receive a minimum of handling and be easily removed in case of fire. These railcars shall not be placed under bridges, in or alongside passenger sheds or stations, or where they may stand opposite or near locomotives on parallel tracks.

h. Consistent with efficient operations, railcars and locomotives on piers or wharves shall be placed so the maximum number of cars can be quickly removed in the event of fire or other emergency. A standby locomotive and crew should be at the pier or wharf for such removal and isolation of railcars containing ammunition and explosives. On piers or wharves, railcars containing explosives shall have their air brakes set, but shall not have their hand brakes set nor shall they be chocked. If weather conditions warrant, chocks may be placed on the tracks fully clear of the cars to catch them if they start to roll. Explosives laden railcars shall not be placed on a pier or wharf until required. The number of railcars loaded with explosives on a pier or wharf shall be kept to a minimum and shall not exceed the number required to support one eight-hour work shift. The NEW of the railcars, when added to the NEW of the ship(s) that are on berth, must also not exceed the total NEW approved for the pier or wharf. Empty cars should be moved as frequently as possible.

i. For off-station shipments, railcars containing explosives shall be dunnaged and shored as necessary prior to being moved, and the completion of dunnaging and shoring shall be accomplished at an established shoring site at the activity. If emergencies justify the risk involved, cars may be moved before these operations are completed. Cars loaded for immediate transfer to magazines or segregation buildings should be dunnaged and shored only as needed to prevent shifting of the load during such transfer. Refer to NAVSEA SW023-AK-WHM-010.

12-8.3.5. Railcar Sealing. Requirements governing railcar sealing, broken or changed seals, and seal records are specified in NAVSEA SW023-AK-WHM-010.

12-8.3.6. Retrieval of Loaded Railcars Placed Off-Base. Railcars loaded with ammunition, or other hazardous or sensitive materials shall not be left unattended on or near government railroad tracks outside the boundaries of the activity. Refer to NAVSEA SW023-AK-WHM-010 for retrieval procedures.

12-9. OPERATIONS AT TRANSFER POINTS.

Ammunition and explosives shall be moved through transfer points as expeditiously as possible, and regardless of the authorized maximum limits, the quantities shall be restricted to the smallest quantities that are compatible with uninterrupted operations. Explosives and ammunition shall not be stored in transfer facilities except as required while awaiting transfer and reconsignment of material for outgoing shipment or while awaiting permanent storage within the shore establishment. Incoming shipments shall be dispatched for redistribution as soon as possible after they are received. Items for outgoing

shipments shall not be accumulated in advance of orders covering each specific shipment. Personnel working in or entering shipping and receiving sheds, transfer depots, barricaded sidings, and segregation facilities shall observe the same precautions and restrictions that are specified for magazines and operating buildings. Transfer depots, shipping or receiving buildings and platforms, and segregation facilities may be used for normal marking, packing, crating, labeling, and stenciling operations associated with shipping. They shall not be used for overhauling, renovating, reconditioning, or other similar operations unless these operations are authorized in the facility site approval. These operations shall never be performed while shipping, receiving, or transfer operations are in progress.

12-9.1. CLASSIFICATION YARDS. Classification yards are not subject to quantity-distance regulations, except as discussed in paragraph 7-12.3. Ammunition-loaded conveyances delivered during working hours shall be removed to an appropriate and safe location as soon as possible. Conveyances loaded by the station should be delivered to the yard at the latest time possible prior to scheduled pickup by the carrier. Loaded conveyances containing ammunition delivered by a carrier after working hours or on weekends or holidays should be removed to safe locations as soon as possible. Ammunition-loaded conveyances should not remain in the yard for more than 24 hours. If delays occur while unloading railcars, the commanding officer of the station shall consider the hazards involving the community and station and shall determine whether railroad operating personnel should be called in to remove the loaded railcars or whether the removal may be deferred to regular working hours.

12-9.2. SHIPPING OR RECEIVING SHEDS AND TRANSFER DEPOTS. The combined NEW of explosives and ammunition in railcars, and trucks at a transfer depot, or shipping and receiving shed at one time shall not be greater than that specified by the site approval.

12-9.3. BARRICADED SIDINGS. The quantity-distance (Q-D) requirements applicable to barricaded sidings depend upon the type and amount of material they contain, as specified in chapter 7. The sidings shall not be loaded in excess of these limits. Barricaded sidings, except for the entrance, may be considered as barricaded, aboveground, and uncovered magazines for Q-D purposes and the Q-D criteria in tables 7-12, 7-13 and 7-14 shall apply. Railcars or motor vehicles loaded with ammunition or explosives should not be held at barricaded sidings any longer than is necessary to ship or store the material in magazines. See paragraph 11-6.1 for time restrictions on holding ammunition and explosives in barricaded sidings. The barricaded area surrounding operating buildings or magazines should not be used in place of approved barricaded sidings except in an emergency. When the area surrounding an operating building is used, the combined weight of explosives and ammunition in the railcars or motor vehicles and in the building shall not exceed the approved Q-D limit established for that building, and the types of materials must comply with compatibility mixing charts. Railcars and trucks shall be kept within the confines of the barricades with only the end of a railcar or truck exposed.

12-9.4. SEGREGATION FACILITIES. In addition to the requirements specified for segregation facilities in paragraph 8-5.1, the following operational requirements shall be observed.

12-9.4.1. General Regulations.

a. All parked railcars shall be on the inboard tracks adjacent to the sorting buildings. The outboard tracks shall not be used for storage, but shall be kept clear at all times. The only purpose of these tracks is to facilitate delivery and removal of railcars at the sorting buildings. A locomotive shall be assigned to the group of buildings and shall be readily available at all times during operations at these facilities.

b. No railcars shall be parked between buildings or with their ends projecting past the ends of barricades. All railcars shall be parked alongside the buildings.

c. Trucks and trailers used in connection with operations and deliveries to, or from, segregation facilities shall be restricted to the truck platform areas at the outer ends of the end buildings in the segregation line.

d. The workload should be planned so that all buildings are cleared of ammunition and explosives at the close of each day's work. In the event that conditions make it impractical to clear all buildings before the end of working hours, the detailed instructions contained in paragraphs 11-6.3 and 11-6.4 shall be followed with respect to the retention of ammunition and explosives within buildings.

e. HC/D 1.1 and 1.2 material shall never be retained in general ammunition or propellant powder buildings. Any of this material brought into these buildings shall be removed immediately to the bomb-type ammunition building. Similarly, any HC/D 1.3 and 1.4 ammunition brought in or near a bomb-type ammunition building shall be delivered promptly to the sorting building.

12-9.4.2. Operation. In normal operation of the segregation facility, railcars containing mixed types of fleet-return ammunition should be taken to the general ammunition building for classification of the ammunition. Ammunition belonging in either the bomb-type or propellant powder building should be promptly transported to the appropriate building where detailed segregation should then be carried out for each type. Railcars known to contain only ammunition of the types belonging to one specific building, other than general ammunition, may be taken directly to that building without going to the general ammunition building. Minor exterior maintenance operations may be performed during segregation without affecting the explosive limits of the segregation facility. Examples of minor exterior maintenance operations allowed are: minor rust removal, touch-up paint, stenciling, de-palletizing and palletizing, banding, and packaging for purposes of identification.

12-9.4.3. Bomb-Type Ammunition Building. The bomb-type ammunition building is used to segregate and sort HC/D 1.1 ammunition such as bombs, mines, destructors, warheads, depth charges, demolition material, and bulk high explosives.

a. Explosive Limit. A maximum of 125,000 pounds Net Explosive Weight (NEW) of high explosives may be contained in the bomb-type ammunition building and all railcars adjacent to this building, provided criteria for siting explosive operating buildings is met.

b. Removal of Railcars. Loaded railcars containing segregated, bomb-type ammunition shall be removed as soon as practical to an appropriate magazine, filling house, or barricaded siding.

12-9.4.4. General Ammunition Building. The general ammunition building is used to segregate and sort projectiles, fixed ammunition, rockets, fuzes, primers, black powder cartridges and units, mortar ammunition, pyrotechnic material, and inert material.

a. Explosive Limit. The ammunition limit for the general ammunition building should be the amount necessary to maintain safe and smooth operation in the building. The total amount should be kept to a minimum at all times and should comply with siting criteria for explosive operating buildings.

b. Removal of Railcars. Railcars shall be loaded as soon as practical and removed to an appropriate magazine, filling house, or barricaded siding immediately after being loaded. Partially filled cars may be removed if required.

12-9.4.5. Propellant Powder Building. The propellant powder building is used to segregate and sort bulk smokeless powder, bulk jet assist propulsion powder, propelling charges, separate rocket motors, and other propulsion units.

a. Explosive Limit. A maximum of 300,000 pounds NEW of smokeless powder may be contained in this building and all railcars adjacent to the building, provided criteria for siting explosive operating buildings is met.

b. Removal of Railcars. Railcars shall be filled with segregated propellant powder and removed to an appropriate magazine, filling house, or barricaded siding. Partially filled cars may be removed if required.

12-10. AIR SHIPMENT.

The regulations and requirements described by 14 CFR and 49 CFR, published in Bureau of Explosives Tariff No. BOE-6000, and the International Civil Aviation Organization Technical Instructions for the Safe Transport of Dangerous Goods by Air apply to air shipment by commercial aircraft. The regulations and requirements for packaging and handling dangerous materials for transportation by military aircraft are described by NAVSUP PUB 505. In addition, NAVSEA SW020-AG-SAF-010 provides requirements for cargo and aircraft pre-loading inspection, as well as for aircraft loading, placarding, grounding, electrical shielding, chocking, and other matters relating to air shipment of ammunition and explosives.

12-11. WATER TRANSSHIPMENT.

Transshipment of ammunition, explosives and related hazardous materials by water in merchant and Naval ships is governed by referenced publications and/or instructions listed in paragraph 12-1. It is important to note that ammunition and explosives should be moved from piers and wharves as expeditiously as is consistent with safety. Ammunition and explosives shall not be stored on piers and wharves except when staged for immediate loading or offloading of ships, barges, or other craft.

12-11.1. SAFETY SUPERVISION. It is the responsibility of the commanding officers of the station, naval vessel, and merchant vessel to comply with all safety regulations for ammunition and explosives handling in pier and wharf operations. These regulations are provided in paragraphs 1-4.3.2, 1-4.3.3, and 1-4.3.4. In addition, loading and shipment on piers and/or wharves or aboard ships or naval vessels shall take place under the surveillance of an appropriate supervisor and in accordance with the following safety provisions.

12-11.1.1. Responsibility for Safety on Piers and Wharves. In accordance with OPNAVINST 8023.24 (series), qualified and certified personnel shall be assigned to monitor the explosives safety of ammunition and explosives handling operations on piers and wharves. Responsibilities of these safety monitors are as follows:

a. Safety Observer. The shore ordnance handling activity shall designate at least one qualified officer, enlisted (E6 or above), or civilian safety observer, to be present and associated with each pier or wharf. The safety observer has the following responsibilities:

(1) Observing the handling of hazardous material to prevent any rough handling or other unsafe practice.

(2) Have the authority to stop any or all phases of operations involving the handling of ammunition or explosives at the pier when unsafe conditions exist.

(3) Maintain continuous presence during wharf/pier staging, clearing, ship onloading and offloading operations. If needed, assistants shall be assigned to carry out these functions.

The safety observer shall be fully qualified and certified in accordance with OPNAVINST 8023.24 (series). When handling limited quantities of security force ammunition within the parameters of paragraph 7-10.c, the ordnance handling activity may assign responsibilities of the safety observer to a security team member through applicable local instructions.

b. Pier Safety Loading Officer. The ESO/shore safety office shall assign one or more pier safety loading officers to the pier or wharf area. The pier safety loading officer shall have the following responsibilities.

(1) Conduct daily inspections of the pier and of vessels at the pier or wharf prior to onloading or offloading ammunition and explosives.

(2) Be present continuously during wharf/pier ship onloading and offloading operations.

(3) Have the authority to stop any or all phases of operations involving the handling of ammunition or explosives when unsafe conditions exist.

(4) Limit the number of personnel on the pier or wharf during ammunition and explosive operations to the minimum necessary to efficiently perform the work at hand.

(5) Strictly prohibit unauthorized personnel from piers and wharves.

The pier safety loading officer is the individual who is charged with overseeing all ordnance handling on the entire pier/loading areas. Due to the broad level of responsibilities of the pier safety loading officer, participation in the OPNAVINST 8023.24 (series) Navy A&E Personnel Qual/Cert program or MCO 8023.3 (series) Marine Corps Personnel Qualification and Certification Program for Class V Ammunition and Explosives is not required. Local (command) directives must be in place to define specific training requirements. Upon completion of daily inspections of the piers, wharfs and of vessels at the pier or wharf, a pier safety-loading officer may oversee multiple ordnance handling operations within the same local waterfront operating location as long as line of sight of all handling operations can be maintained. A pier safety-loading officer is not required for on/offloads of limited quantities of security force ammunition conducted within the parameters of paragraph 7-10.c. Additionally, a pier safety loading officer is not required for pier side on/offloads of limited quantities of small arms ammunition (limited to hazard Class 1.4S), SOLAS items (limited to a combined 15 lbs. NEW HC 1.4 and 1.3 materials), and exercise torpedoes (limited to HC 1.4s material).

12-11.1.2. Responsibility for Safety Aboard a Naval Ship. A qualified officer shall be delegated as safety officer when ammunition or explosives are loaded aboard or discharged from commissioned ships of the United States Navy. The safety officer shall have as many assistants as necessary. In the event that qualified personnel are not available, the station shall furnish personnel as necessary.

12-11.1.3. Responsibility for Safety Aboard a Merchant Vessel. For merchant vessels, safety loading personnel shall be provided, as required, by the station.

12-11.1.4. Safety Observer and Pier Safety Loading Officer Identification. Safety observers and pier safety loading officers shall wear distinctive headgear, armbands, or other items that readily identify them. Identifying items worn by safety observers shall be different from those worn by shore pier safety loading officers.

12-11.1.5. Policy Arbitration. Any disputes or disagreements involving the handling or storing of ammunition or explosives shall be brought to the immediate attention of the officer in charge of the pier whose decision shall prevail. If the problem persists, it shall be presented to the commanding officer of the shore activity for resolution. This regulation applies to disputes involving ship personnel, station personnel, contract stevedores, or anyone else engaged in the operation.

12-11.1.6. Arrival Conference. Before a naval or merchant vessel discharges or loads ammunition at an ordnance station pier or wharf, the commanding officer of the station or his authorized representative shall hold an "arrival conference" with the commanding officer of the ship to coordinate safety precautions and procedures on the pier or wharf and aboard the ship.

12-11.2. LIGHTERS, BARGES, AND TUGS. The provisions of NAVSEA SW020-AG-SAF-010 shall apply to lighters and barges while they are moored or used at outloading and offloading piers and wharves or alongside vessels at piers and wharves with the exception of stowage compatibility which is defined in paragraph 12-11.2.1. Barges and lighters at ordnance establishments usually are moored at barge piers, at fixed moorings served by catwalks at the barge pier, or at separate anchorages within the waterfront limits of the ordnance station. The number of lighters and barges and the amount of explosives, ammunition, and hazardous materials they contain shall not exceed the maximum NEW limits specified in the site approval. A limit of one barge per working hatch should be established for all explosives loading piers or wharves, and only the barge working directly into the hatch should be permitted alongside the vessel. Barges and lighters that have discharged their cargo to a vessel or have received cargo from another vessel shall be transferred to the approved berth as soon as possible. Tugs handling, towing, or attending barges and lighters, when approaching or nearing open hatches of vessels, shall observe safety regulations pertaining to the screening of smoke and exhaust stacks. In addition, all barges and lighters should be provided with suitable navigational lights and, when required by local, service, or federal regulations, should be provided with suitable anchor, ground tackle, fog horn and bell, and other similar equipment. Applicable firefighting equipment and devices shall be available on the barge or lighter when ammunition and explosives are being handled. When practical, ammunition and explosives should be loaded or offloaded at a pier or wharf rather than at an explosives anchorage to prevent hazards caused by wind, waves and swells between barge and ship at an explosives anchorage. Refer to NAVSEA S6470-AA-SAF-010 for guidance and requirements regarding entry into or work in confined or enclosed spaces. These gas free engineering criteria shall apply to barges and lighters at Navy and Marine Corps shore activities.

12-11.2.1. Stowage Compatibility. The compatibility criteria of 49 CFR 176 is applicable for barge and small boat loading and transporting ammunition and explosives. Separation of noncompatible stacks of explosives can be accomplished by ensuring a 10-foot separation between stacks on barges and small boats or the use of portable wooden partitions constructed of 3/4-inch fire resistant plywood, running from deck to overhead on barges. Blasting caps, detonators, and other items in storage compatibility group B must be stowed in accordance with 49 CFR 176.144(a) and 176.145. Landing Force Operational Reserve Materiel (LFORM) ammunition can be grouped and loaded by compatibility groups listed in NAVSEA OP 4, Table 3-3.

12-11.3. SMALL BOATS. The movement of ammunition and explosives by small boats is authorized provided the criteria in NAVSEA OP 4 governing small boat operations is met. Only small boats that have approved secure-for-sea capabilities, a fire extinguisher, a suitable anchor and ground tackle, fog

horn or bell, radio communications equipment, life jackets and other PPE equipment which special circumstances may dictate, will be authorized to transport ammunition and explosives. Rubberized Inflatable Boats (RIB), Rubber Raiding Craft Mk III and Mk IV Special Operations Craft (SOC), and other similar craft are not authorized except as part of training exercises or approved special operation missions where their use is specifically addressed in the SOP. The boat shall carry a qualified boat officer, a certified coxswain and a qualified crew. Prior to any small boat movement, an inspection will be made by the boat officer and coxswain to ensure its readiness and reliability. Other safety procedures specified under paragraph 12-10 of this manual for pier and wharf operations are applicable to small boat loading/unloading operations. Storage compatibility requirements of paragraph 12-11.2.1 are applicable. NAVSEA OP 4, Table 3-2 should be observed when possible.

12-11.4. DUNNAGE. Dunnage shall be delivered in quantities to piers and wharves by flatcars, open trucks, or industrial lumber-carrying trucks, and when ordered by the waterfront officer or supervisor. Surplus dunnage shall be removed periodically to the salvage yard to prevent hazardous accumulations on piers and wharves.

12-11.5. LOADING REGULATIONS. General regulations regarding the handling of ammunition and explosives described in paragraph 10-1.1 shall be observed. Particular importance is given to regulations against rough handling of ammunition and explosives. It must be emphasized that even the least sensitive explosives may detonate if subjected to rough and improper handling. Therefore, utmost care shall be exercised when handling ammunition and explosives.

12-11.5.1. Bravo Flag. A red Bravo flag shall be prominently displayed by all ships and craft engaged in ammunition and explosives loading and unloading operations. Also a Bravo flag shall be prominently displayed by all barges, lighters, and small boats while they are loaded with or are transporting ammunition and explosives. At night, a red light shall be used in place of a Bravo flag. Small boats engaged in operations (that is, Explosive Ordnance Disposal (EOD), special warfare, amphibious landings) are exempt from this requirement during transit or while handling at training sites or operating areas.

12-11.5.2. Night Operations. Ammunition and explosives shall not be loaded on or discharged from a ship, lighter, barge or small boat at night except when required by the loading schedule or in an emergency. Approval from the activity commanding officer shall be obtained in these instances. When required at night, loading and/or discharging shall be conducted under safety supervision at an adequately lighted pier equipped with fire protection. Refer to paragraphs 8-6.3, 4-3.10.2, and 12-11.1 for lighting, fire protection, and safety supervision requirements.

12-11.5.3. Operations at Explosives Anchorages. All port regulations concerning operations at a pier and wharf apply to loading and unloading operations at explosives anchorages.

12-11.5.4. Loading and Stowage Aboard Breakbulk Merchant Ships. All Navy and Marine Corps activities that load, stow, and dunnage ammunition and explosives aboard breakbulk merchant ships shall apply the principles illustrated and described in the latest revision to NAVSEA OP 3221. Ship captains and cargo stowage inspectors shall use NAVSEA OP 3221 to evaluate the adequacy of all ammunition and explosives cargo stowage on board their ships for all movements whether inbound, out-bound, or intra-area worldwide. OPNAVINST 8020.14 (series) authorizes the preceding requirements.

CHAPTER 13
TREATMENT, DESTRUCTION, DISPOSITION AND INTENTIONAL DETONATION OF AMMUNITION AND EXPLOSIVES

13-1. BACKGROUND.

Over the years, Congress has delegated authority to the Department of War (DoW) for developing and issuing explosives safety regulations for the management of ammunition and explosives throughout the life cycle. Management functions include: production, handling, safe storage, transportation, use, treatment, and destruction. The Resource Conservation and Recovery Act (RCRA) of 1976 established specific regulations for when an item becomes waste, and how hazardous wastes are to be managed. The Military Munitions Rule amendments to RCRA in 1997 defined when military munitions will become hazardous waste and how these waste military munitions will be managed. In addition, this chapter establishes criteria for managing and processing material potentially presenting an explosive hazard (MPPEH) in paragraph 13-15.

13-1.1. DESIGNATED DISPOSITION AUTHORITY. DODM 4715.26, DoD Military Munitions Rule (MR) Implementation Procedures, appoints the Designated Disposition Authority (DDA). - The DDA is responsible for providing munitions disposition instructions for excess, obsolete, unserviceable (for example aged, deteriorated, or damaged), and waste ammunitions and explosives. Upon receipt of request for disposition instructions from the installation, the DDA will consider all legitimate use and beneficial reuse for the ammunition and explosives. The treatment requirements in this chapter are limited to ammunition and explosives that have been designated by the DDA for treatment or to those items that have been determined to be unsafe by Explosive Ordnance Disposal (EOD) personnel and require destruction. Treatment of ammunition and explosives is a RCRA regulated action that removes the explosive hazard associated with the waste ammunition and explosive item. Treatment for the purpose of this chapter is limited to open burn and open detonation of the waste ammunition and explosive item.

13-1.2. AUTHORIZATION FOR ROUTINE TREATMENT. Treatment can only occur upon receipt of munitions disposition instruction from the cognizant DDA. OPNAVINST 8026.2 (series) provides authority and responsibility for the DDA process. Disposition instructions for material under technical direction of the Marine Corps will be requested from Commander, Marine Corps Systems Command (COMMARCORSYSCOM) (PM AMMO).

13-1.2.1. Approved Procedures. Standard operating procedures (SOP) developed in accordance with paragraph 2-1.1 shall be used by all personnel conducting routine disposal operations of ammunition and explosives. These procedures shall be reviewed by the commanding officer of the activity where the routine disposal is being conducted. Treatment operations must comply with all applicable local, state, and federal environmental requirements.

13-1.3. EXPLOSIVE HAZARDOUS WASTE TRACKING. All activities shall establish and maintain a tracking system that identifies the location and treatment status of all materials identified as waste munitions or explosive hazardous waste (EHW) to ensure compliance with existing definitions,

standards, and regulations. All known waste munitions shall be promptly treated, stored, inspected and reported in accordance with the requirements of the MR and this publication.

13-1.4. HAZARDOUS WASTE TRAINING REQUIREMENTS. All personnel involved in the management of waste munitions must receive the environmental training required by 40 CFR 264.16.

13-1.5. EMERGENCY TREATMENT. Emergency destruction will be performed by EOD personnel in accordance the MR. Only EOD personnel can determine if a situation is an EOD emergency response requiring further EOD action. EOD personnel shall use render safe procedures developed by the EOD Technical Division (NSWC IHD), Indian Head, MD, for emergency destruction of ammunition or explosives.

13-1.6. WAIVERS. Waivers/exemptions to MR or RCRA Permitted treatment sites' operational requirements are not authorized.

13-1.7. PROHIBITED METHODS OF TREATMENT. Intentionally abandoning, burying, ocean dumping, or dumping ammunition or explosives in wells, marshes, streams, inland waterways, or pits is prohibited. Under no circumstances, other than to safeguard life or safety of the ship, will disposition of ammunition and explosives by jettison at sea be conducted by any Naval vessel. Emergency jettison at sea is discussed in NAVSEA OP 4.

13-1.8. PERSONNEL SEPARATION DISTANCES FOR INTENTIONAL DETONATIONS.

13-1.8.1. Separation Distances for Nonessential Personnel. The minimum separation distances between ranges, as well as other intentional detonation sites, and nonessential personnel are determined by application of the criteria given below. If the minimum separation distances requirements for previously DWESO approved sitings or those prescribed in this section cannot be met, then personnel shall be provided with protection as specified in paragraph 7-7.4.1.

a. Non-Fragmenting Explosives Material: Distance (feet) = $328W^{1/3}$, but not less than 200 feet.

b. Fragmenting Explosives Material: Use the larger of the distances given in subparagraphs (1) and (2) below.

(1) Distance (feet) = $328W^{1/3}$, but not less than 200 feet.

(2) Distances given in tables 13-1 and 13-2. A calculated (using TP-16) or measured maximum fragment throw distance (including the interaction effects for stacks of items or single items, whichever applies), with an appropriate safety factor, may be used to replace the distances given in tables 13-1 or 13-2. Calculated case fragment maximum throw distances for selected munitions are also given in the Fragmentation Data Base that is located on the DWESO secure web page. A snapshot of this data base is included in TP-16.

(3) Tables 13-1 and 13-2 as well as the Fragmentation Data Base and its snapshot in TP-16 are for individual items. These distances do not directly apply to stacks of munitions. Further, these throw distances do not consider fragments that are produced by sections of nose plugs, base plates, boattails, or lugs. These fragments are sometimes referred to as "rogue" fragments. In addition, shaped charge jets or slugs from directed energy munitions can travel significantly greater distances than case fragments; therefore, these munitions require specific analysis. "Rogue" fragments can travel to significantly greater distances (ranges greater than 10,000 feet) than those shown in tables 13-1 and 13-2, the Fragmentation Data Base, and its snapshot in TP-16. Care must be taken either to properly

orient the munition (for example, lugs or strongbacks and nose or tail plate sections oriented away from personnel locations), or to minimize or eliminate the hazard of rogue fragments (for example, sand bagging the munition prior to detonation).

NOTE

Items shall always be sited so that lugs and/or strongbacks and nose and/or tail plate sections are oriented away from personnel locations.

c. Multiple Rounds: When detonations involve multiple rounds, the preferred approach is as follows:

(1) Munitions shall be placed in a single layer with their sides touching such that their axis is horizontal;

(2) The munitions shall be placed so that the nose of each munition is pointing in the same direction;

(3) Munitions shall be oriented so that lugs and/or strongbacks and nose and/or tail plate sections (rogue fragments) are facing away from areas to be protected;

(4) The consolidated shot shall be initiated in such a manner that detonation of all munitions is simultaneous.

When these procedures cannot be followed but the orientation of the rogue fragments can be controlled, then the ranges given in tables 13-1 and 13-2 and the Fragmentation Data Base in TP-16 must be increased by 33% to account for interaction effects and/or non-design mode initiations. When multiple rounds are arranged in stacks in which the orientation of individual items cannot be controlled, fragment ranges must be evaluated on a case-by-case basis. When detonations involve stacks of mixed munition types, evaluate the ranges for each type separately using the procedures just presented and use the larger of the ranges that are obtained.

d. Protective structures for personnel, or measures taken to suppress blast and/or fragment effects at treatment operations, may be used to reduce the required withdrawal distances. EOD operational incidents involving threat devices require all non-essential personnel to withdraw to distances required by paragraph 4-5.1.3.

Table 13-1. Default Maximum Case Fragment Distances Versus Diameter for Intentional Detonations

Diameter (in)	Maximum Fragment Distance[1,6]		
	Robust[2] (ft)	Extremely Heavy Case[3] (ft)	Non-Robust[4] (ft)
0.2	Footnote 5	Footnote 5	126
0.3			183
0.4			237
0.5	414		287
0.6	480		335
0.7	543		380
0.8	604	628	424
0.9	663	683	465
1.0	720	736	505
1.5	984	981	687
2.0	1,220	1,202	846
2.5	1,437	1,407	989
3.0	1,640	1,602	1,119
3.5	1,831	1,788	1,239
4.0	2,012	1,968	1,350
4.5	2,184	2,142	1,455
5.0	2,349	2,312	1,554
5.5	2,508	2,479	1,648
6.0	2,662	2,642	1,738
6.5	2,810	2,803	1,823
7.0	2,953	2,962	1,905
7.5	3,093	3,118	1,983
8.0	3,228	3,272	2,059
8.5	3,360	3,425	2,131
9.0	3,489	3,577	2,202
9.5	3,615	3,727	2,270
10.0	3,738	3,875	2,336
10.5	3,858	4,023	2,400
11.0	3,976	4,170	2,462
11.5	4,092	4,316	2,522
12.0	4,205	4,461	2,581
12.5	4,316	4,605	2,638
13.0	4,425	4,748	2,694
13.5	4,532	4,891	2,749
14.0	4,638	5,033	2,802
14.5	4,742	5,175	2,854
15.0	4,844	5,316	2,905
16.0	5,044	5,597	3,003

Table 13-1. Default Maximum Case Fragment Distances Versus Diameter for Intentional Detonations (continued)

Diameter (in)	Maximum Fragment Distance[1,6]		
	Robust[2] (ft)	Extremely Heavy Case[3] (ft)	Non-Robust[4] (ft)
18.0	5,426	Footnote 5	3,189
20.0	5,789		3,361
22.0	6,135		3,522
24.0	6,466		Footnote 5
26.0	6,784		
28.0	7,090		
30.0	7,385		

NOTES:

1. These calculated fragment throw ranges are for individual munitions and do not apply to stacks. They also do not address “rogue” (non-case) fragments that can be produced from sections of nose plugs, base plates, boattails, or lugs. Rogue fragments can travel to significantly greater distances than those shown (distances greater than 10,000 feet). Care must be taken to properly orient the munition or to take other measures to minimize rogue fragment hazards.

2. Robust Munitions are defined in appendix A.

Maximum Fragment Distance (MFD) in ft, Diameter (D) in inches; In is natural logarithm.
MFD = e[65796+{0.77975xIn(D)}-{0.028054x(In(D))2}]
D = e[-8.053350+{1.52785xIn(MDF)}-{0.10036x (IN(MFD))2}+{0.00823x(In(MDF))3}]

3. Extremely Heavy Case Munitions are defined in appendix A.

Maximum Fragment Distance (MFD) in ft, Diameter (D) in inches; In is natural logarithm.
MFD = e[6.6013+{0.7111XIn(D)}-{0.010025x(In(D))2}+{0.0062976x(In(D))3}]
D = e[-3.78194+{0.945xIn(MFD)-{0.333574x(In(MFD))2}+{0.01601x(In(MFD))3}]

4. Non-Robust Munitions are defined in appendix A.

Maximum Fragment Distance (MFD) in ft, Diameter (D) in inches; In is natural logarithm.
MFD = e[6.2254+{0.77897XIn(D)}-{0.051876x(In(D))2}+{0.00098771x(In(D))3}]
D = e[-9.63957+{2.92627xIn(MFD)-{0.39665x(In(MFD))2}+{0.02811x(In(MFD))^3}]

5. Use of equations given in footnotes 2, 3, and 4 to determine other diameter/MFD combinations is allowed within the following diameters:

0.4355 inches up to 31.437 inches for robust munitions,
0.7934 inches up to 16.0 inches for extremely heavy case munitions
0.189 inches up to 23.9 inches for non-robust munitions
For lesser or greater diameters, conduct an analysis in accordance with DWESO Technical Paper 16.

6. See paragraph 13-1.8.1.c for ranges associated with multiple munitions detonation.

Table 13-2. Default Maximum Case Fragment Distances Versus Net Explosive Weight for Intentional Detonations[1,6,7]

Net Explosive Weight[2] (lbs)	Maximum Fragment Distance[1,6]		
	Robust[3] (ft)	Extremely Heavy Case[4] (ft)	Non-Robust[5] (ft)
0.01	557	Footnote 6	203
0.015	620		230
0.02	668	782	251
0.03	741	905	284
0.04	797	1,000	309
0.05	843	1,077	330
0.06	882	1,143	348
0.07	917	1,200	364
0.08	947	1,251	378
0.09	975	1,297	392
0.1	1,000	1,339	404
0.15	1,103	1,507	453
0.2	1,181	1,633	492
0.3	1,298	1,821	551
0.4	1,387	1,960	597
0.5	1,459	2,072	634
0.6	1,520	2,165	667
0.7	1,573	2,246	695
0.8	1,620	2,318	721
0.9	1,663	2,381	744
1.0	1,702	2,439	765
1.5	1,858	2,669	852
2	1,976	2,839	919
3	2,151	3,088	1,021
4	2,283	3,271	1,100
5	2,389	3,418	1,164
6	2,478	3,541	1,219
7	2,556	3,648	1,267
8	2,624	3,742	1,310
9	2,686	3,826	1,349
10	2,742	3,092	1,385
15	2,965	4,206	1,530
20	3,131	4,432	1,640
30	3,376	4,769	1,807
50	3,704	5,226	2,038
70	3,931	5,551	2,204

Table 13-2. Default Maximum Case Fragment Distances Versus Net Explosive Weight for Intentional Detonations[1,6,7] (Continued)

Net Explosive Weight[2] (lbs)	Maximum Fragment Distance[1,6]		
	Robust[3] (ft)	Extremely Heavy Case[4] (ft)	Non-Robust[5] (ft)
100	4,181	5,918	2,391
150	4,479	6,371	2,620
200	4,697	Footnote 6	2,793
300	5,017		3,052
500	5,437		3,407
700	5,724		3,658
1,000	6,038		3,940
1,500	6,405		4,282
2,000	6,672		Footnote 6
3,000	7,058		
5,000	7,557		

NOTES:

1. These calculated fragment throw ranges are for individual munitions and do not apply to stacks. They also do not address “rogue” (non-case) fragments that can be produced from sections of nose plugs, base plates, boattails, or lugs. Rogue fragments can travel to significantly greater distances than those shown (distances greater than 10,000 feet). Care must be taken to properly orient the munition or take other measures to minimize rogue fragment hazards.

2. NEW is the total weight of all explosive substances, not the storage NEW.

3. Robust Munitions are defined in appendix A.

Maximum Fragment Distance (MFD) in ft, Net Explosive Weight (W) in pounds; ln is natural logarithm.

$MFD = e[7.4395+\{0.21895 x \ln(W)\}-\{0.005158 x (\ln(W))^2\}]$

$W = e[24.007132-\{27.117219 x \ln(MFD)\}+\{7.015604 x (\ln(MFD))^2\}-\{0.731353 x \ln(MFD))^3\}+\{0.029567 x (MFD))^4\}]$

4. Extremely Heavy Case Munitions are defined in appendix A.

Maximum Fragment Distance (MFD) in ft, Net Explosive Weight (W) in pounds; ln is natural logarithm.

$MFD = e[7.7995+\{0.22669 x \ln(W)\}-\{0.012281 x (\ln(W))^2\}+\{0.0010527 x (\ln(W))^3\}]$

$W = e[96.485092-\{94.67555 x \ln(MFD)\}+\{32.536212 x (\ln(MFD))^2\}-\{5.396168 (MFD))^3\}+\{0.437587 x (MFD))^4\}-\{0.013731 x (\ln(MFD))^5\}]]$

5. Non-Robust Munitions are defined in appendix A.

Maximum Fragment Distance (MFD) in ft, Net Explosive Weight (W) in pounds; ln is natural logarithm.

$MFD = e[6.6402+\{0.26763 x \ln(W)\}-\{0.0043986 x (\ln(W))^2\}]$

$W = e[-22.259\{4.2565 x \ln(MFD)\}-\{0.3319 x (\ln(MFD))^2\}+\{0.0294 x \ln(MFD))^3\}]$

6. Use of equations given in footnotes 3, 4, and 5 to determine other NEW/MFD combinations is allowed within the following NEWs:

0.0039 lbs up to 5,576 lbs for robust munition,
0.017 lbs up to 153.57 lbs for extremely heavy case munitions
0.00014 lbs up to 1,818.7 lbs for non-robust munitions

For lesser or greater NEWs conduct an analysis in accordance with DWESO Technical Paper 16.

7. See paragraph 13-1.8.1.c for ranges associated with multiple munitions detonation.

13-1.8.2. Separation Distances for Essential Personnel. Essential personnel conducting training operations, or operations involving demolition of explosives and ammunition, do not require minimum separation distances. Competent on-site authorities shall determine which personnel are essential and the minimum separation distances for these operations. This distance is certified as part of the site approval for established ranges. Structures/shelters provided for routine protection of essential personnel will be submitted to Naval Ordnance Safety and Security Activity (NOSSA) for site approval in accordance with paragraph 8-1.2.3. These control sites for non-emergency operations must be outside intraline distance of other explosive sites.

13-2. TREATMENT OF AMMUNITION AND EXPLOSIVES BY BURNING.

The following paragraphs describe the types of ammunition and explosives that can be treated by burning, where and by whom the burn operation shall be performed, and the precautions that shall be observed during burning operations.

13-2.1. TYPES OF AMMUNITION AND EXPLOSIVES TREATED BY BURNING. Destruction by burning is generally accepted for the following types of ammunition and explosives:

a. Black powder.

b. Chemical Group B ammunition.

c. Limited quantities of dynamite in bulk.

d. Floating smoke pots (HC-filled) or similar ammunition.

e. Chemical Group C ammunition.

f. Bulk high explosives.

g. Chemical Group D ammunition.

h. Nitrocellulose.

i. Primers.

j. Pyrotechnics.

k. Small-arms ammunition.

l. Smokeless powder.

m. TNT demolition blocks.

n. Tracer mix and other pyrotechnic mixtures.

o. Rocket motor propellant grains.

p. Propellant, explosive and pyrotechnic manufacturing wastes.

NOTE

The handling/transport treatment process and destruction of ammunition and explosives shall not be undertaken unless the items are specifically identifiable and their characteristics are known. Furthermore, the amount of material to be destroyed at one time shall be consistent with reasonable, safe, and permitted operation. The amount of material to be burned during a single operation shall not exceed the maximum amount recommended by these or other applicable regulations (for example the RCRA permit for treatment). For items previously not treated or those that do not have established reactive data, the number of units that may be destroyed safely at one time shall be determined carefully by starting with a limited number and then gradually increasing that number until the maximum that can be destroyed without risks to life and property is determined. In addition, environmental operating permits often specify limits on quantities of materials which can be disposed of at any given time.

13-2.2. GENERAL REQUIREMENTS FOR BURNING SITES AND STATIC MOTOR FIRING. General requirements for burning operations include choosing a burning site and obtaining site approval, obtaining necessary environmental permits, and choosing the material to be burned, selecting and protecting personnel, observing precautions associated with the burning process, and emergency procedures to be followed in case of an accident.

13-2.2.1. Siting Requirements.

a. Burning of explosive material and static motor firing shall be undertaken only in those areas or locations that have been specifically site approved and/or RCRA permitted for that purpose. When treatment takes place at another facility, such as an Army installation, the criteria established by the host activity shall be used. Sites for burning at DON activities shall be separated from other facilities as specified below:

(1) Protection of burning area essential personnel (those responsible for accomplishing the burning or firing operation as well as those conducting other ammunition operations) will be provided at a minimum K24 protection or an appropriate distance per NOSSA's or MARCORSYSCOM's review of the intended operations and siting conditions. Distances will be calculated using the total weight of all explosives substances, not the storage NEW normally used in distance equation, and all hazard classes (HC/D 1.1 through HC/D 1.4), and HC/D 1.1 and HC/D 1.3 for motors, will be considered HC/D 1.1. There is no requirement to adjust the NEW to address TNT equivalency. However, if known, a TNT equivalency greater than one may be applied. If TNT equivalency of less than one is applied, supporting data must be submitted to NOSSA for approval. If operations are conducted within a structure, the site approval must include an analysis to determine if structural confinement may increase the potential for a greater reaction than burning and the potential for a secondary debris hazard.

(2) All other non-essential personnel (those personnel in administrative, housing areas, and non-ammunition related operations) will be provided K40 protection with a 75 foot minimum for bare (no fragment-producing casings or packaging) explosive material. When burning material that is in packaging that may produce debris, the larger of K40, or the hazardous fragment distance in the "structural" column of table 7-9 must be applied. When burning material has a casing that may produce primary fragments, the larger of K40, or the conditions defining hazardous fragment distances in paragraph 7-6.2 will apply. For an explosive weight less than 450 pounds, the "open" column of table 7-9 can be used, otherwise the "other PES" column of table 7-1 can be used. Adjustment for TNT equivalency does not apply when determining hazardous fragment distances, unless conducting an item-specific calculation in accordance with DWESO TP-16.

(3) Prior to actual burning or static motor firing, these locations may use unintentional detonation siting criteria. Therefore, K18 separation requirements may be applied to other explosives sites until ignition is imminent and K24 separation is implemented.

(4) Burning grounds will be sited at intraline distance from other potential explosion sites.

b. The ground within the immediate vicinity of the burning pad area shall not exceed a 10-degree grade. Treatment operations shall be done in an approved containment device such as a burn pan. Burning directly on concrete, gravel, or cinder surface is prohibited.

c. The burning ground surface and subsoil must be kept free of debris capable of detonating and producing fragments.

d. The burning area shall consist of a square or pad, measuring 300 feet by 300 feet. The pad should be entirely cleared, of all combustibles and fragments so that a flat bed of sand or dirt remains. A 200-foot border beyond the square pad should be cleared of all vegetation, grass, glass, glass particles, and any other combustible materials prior to the use of the site.

e. One burn site (that is, burn pan) shall not be located within 50 feet of another site where material has been burned if the area has not been cleared.

13-2.2.2. Posting of Prescribed Procedures. SOP shall be on site.

13-2.2.3. Treatment Personnel. The following requirements apply to selection and protection of personnel conducting burning operations:

a. Assignment. Commanding officers or a delegated representative are responsible for assigning personnel to operations at treatment areas. All treatment personnel shall be qualified and capable of safely performing their duties. In addition, they shall be informed of the hazards they may encounter the safety precautions and requirement of the RCRA permit. To assure safe operational policies and procedures, all treatment personnel shall be given periodic instruction as frequently as considered necessary in addition to the annual certification program. The number of employees engaged in a treatment or destruction operation shall be the minimum consistent with safe performance. However, no person shall be permitted to perform this work alone. Treatment operations shall be under competent supervision at all times.

b. Protection. Suitable protective clothing and shelter must be provided at the treatment area as deemed necessary by a risk assessment conducted in accordance with paragraph 7-7.3. A minimum of two fire blankets shall be available for emergency use. Personnel engaged in treatment operations shall be instructed in the proper use of fire blankets. An emergency personnel protection area that

includes a personnel shelter may be provided at the burning ground, in addition to a control site. If the shelter is protected by a barricade, a minimum distance of 100 feet between the shelter and the burning pad is required. Otherwise, the shelter shall be a minimum of 500 feet from the burning pad. All windows of the shelter shall be ½-inch thick polycarbonate securely fastened to the building. There shall be no direct viewing ports.

c. Control Site. A control site will be established, at K24 distance from the burning ground where essential personnel congregate at the time of ignition in order to control, observe or support the burn operation. The K24 distance may be reduced through protective construction, in accordance with paragraph 7-7.4.1. Site at ILD from other explosive locations.

13-2.2.4. Firefighting. A risk assessment conducted in accordance with paragraph 7-7.3 will determine the appropriate emergency extinguishing agents needed for the burning operation. No burning ground operations shall be undertaken unless properly manned and equipped mobile firefighting equipment is standing by in a safe location or is available within 5 minutes. The requirement for standby firefighting equipment is particularly important when the fire hazard is high due to dry conditions and/or when there is danger to structures or other property.

13-2.2.5. Communications. Telephone or two-way radio communication with the station network, including emergency and firefighting units, shall be available during burning operations. Transmitting equipment may be located at a minimum distance determined for the transmitter in accordance with NAVSEA OP 3565/NAVAIR 16-1-529, based upon the hazard created by the material/items to be burned. Radio transmitting equipment shall be secured during positioning of electric blasting caps/squib wires and subsequent connections or tests of the electric firing system except in an emergency.

13-2.2.6. Warning Signals. Guards, safety signals, roadblocks, and warning signs shall be used to keep unauthorized personnel from dangerous areas during treatment operations. The burning operation shall not be initiated unless a red flag is prominently displayed and/or a whistle or siren is sounded.

13-2.2.7. Weather Conditions. Treatment by burning shall not be undertaken when the wind velocity is in excess of 15 miles per hour, except under circumstances where any interruption of treatment operations would impose an unacceptable hardship or hazard. There shall be instrumentation at the burning ground for measuring wind velocity. The destruction of ammunition and explosives, along with associated operations, shall not be undertaken during electrical storms or severe weather conditions.

13-2.2.8. Mishaps. Any casualty, mishap, or accident involving fatalities or injuries to personnel or appreciable property damage shall be reported immediately in accordance with OPNAVINST 5102.1 (series) and Marine Corps activities shall report ground mishaps in accordance with MCO 5100.29 Volume 9 (series). The commanding officer of the concerned activity shall immediately appoint a board of qualified personnel, not involved with the operation, to investigate and assemble pertinent details concerning the accident. When a casualty, mishap, or accident occurs in any operation during the treatment of ammunition and explosives, work shall be suspended as quickly and safely as possible. Operations may only resume upon the authorization of the next higher echelon commander. Refer to paragraph 1-5.3 for mishap investigation and reporting requirements.

13-2.2.9. Stockpiling of Ammunition and Explosives Materials. Ammunition and explosive material awaiting destruction shall be kept far enough from the treatment location to be protected against accidental ignition or explosion from fragments, grass fires, sparks, or burning embers. For burning operations, the stockpile area shall be a minimum of 500 feet from any active burning pad. Only the

material intended for a day treatment shall be stored in the stockpile area. No operator should be assigned to the area when actual operations are underway. Explosive storage huts at the burning ground used for storage of powder train and ignition materials including smokeless powder, squibs, and safety fuse, should be protected from the burning area by barricades. Unless designed for permanent storage, these huts should be used only for temporary storage on a daily basis as specified in chapter 11. Permanent magazines shall be sited at appropriate intraline distance in accordance with chapter 7.

13-2.2.10. Damaged Explosive Materials. Burning of damaged HC/D 1.1, HC/D 1.2, or HC/D 1.3 ammunition and explosives, or static firing of damaged HC/D 1.1, or HC/D 1.2 motors, will be sited under the intentional detonation criteria of paragraph 13-3, unless an analysis is provided to show that the explosive material cannot transition to a reaction greater than burning. Damaged explosives material is material that could significantly increase the likelihood of a reaction more severe than burning (i.e., cracked propellant in a motor, or a damaged motor case that could lead to a pressure rupture of the case).

13-2.2.11. Static Motor Firing. Sites used for static firing of HC/D 1.1 or HC/D 1.3 motors require an explosives safety site approval. The site approval request will designate the firing site as an explosive operating location; certify that the test stand can restrain the motor from becoming propulsive, or on a rail sled, ensure propulsive movement is constrained to a defined path; and address the direction effects of the thrust. Essential personnel will be provided K24 protection as defined in paragraph 13-2.2.1.a(1). Non-essential personnel will be provided the larger of K40, or the conditions defining hazardous fragment distances in paragraph 7-6.2.

13-2.3. SPECIFIC REQUIREMENTS FOR BURNING OPERATIONS. The following requirements are necessary to ensure safety during burning operations.

13-2.3.1. Safety Requirements.

a. SOPs covering the disposition of items to be treated by burning shall be available for use by personnel conducting operations.

b. Ammunition and explosives to be treated shall not be roughly or carelessly handled. The regulations for handling ammunition and explosives prescribed in other chapters of this manual shall be observed. Extra care should be taken since in most instances the hazards of the ammunition or explosives to be treated are increased by such factors as age, deterioration, or damage.

c. All ground areas or sites over which ammunition, explosive and other hazardous material is to be placed or spread for treatment shall be carefully inspected to assure against the presence of heat retained in the ground, or “live” sparks, embers, or burning material resulting from previously treated materials in the vicinity.

d. Downwind burning pads in the burning ground area shall be selected first so that successive burning will be on pads in an upwind direction from previous burning.

e. All operators shall be equipped with conductive safety-toed shoes, fire retardant outer garments and headwear, and any other safety apparel needed for personnel protection.

f. Only authorized spark resistant tools shall be used while working within a radius of approximately 15 feet from exposed hazardous material; however, a clean sharp knife may be used when cutting time blasting fuse for use with a non-electric firing system.

g. Tools which may be used for handling explosive material shall not be permitted to become heated by remaining near burning explosives.

h. Burning shall not be performed when the wind velocity is in excess of 15 mph except where delay would cause unacceptable hardship or hazard. There must be instrumentation at the burning location capable of determining wind velocity.

i. The number of personnel involved in treatment operations shall be kept to a minimum, but in no case shall an operator work alone.

j. All personnel shall be instructed as to the dangers of inhaling toxic vapors resulting from burning hazardous materials. When prevailing winds would cause the inhalation of toxic fumes, operations shall be suspended or personnel shall be equipped with proper respiratory protection.

k. When actual burning is underway, no personnel shall be stationed at or near material awaiting treatment in the stockpile area.

l. All burning operations, including wet down if performed, shall be completed a minimum of 30 minutes before personnel leave the burning grounds.

m. Burning shall normally be accomplished during daylight hours only. If due to unforeseen circumstances burning continues after daylight hours, a watch of at least two responsible personnel will be maintained until it is determined no probability of fire exists.

n. Responsible personnel; that is, security, fire department, etc., shall be notified that burning is to be performed and should make periodic checks of the burning ground, after burning is completed, for possible restart of fires.

13-2.3.2. Delivery of Ammunition, Explosive and Hazardous Material to Burning Site. Requirements for delivering material to burning sites are as follows:

a. Transport dangerous cargo in accordance with SW020-AF-HBK-010.

b. Containers holding hazardous materials shall be carefully loaded into the vehicle and secured against falling or moving during transfer to the burning site.

c. If practical, all containers shall be full. Containers that are partially filled shall be set aside and loaded into the vehicle last. These containers should be removed first on arrival at the burning site. Care shall be taken to minimize the motion of hazardous material within the container so that the generation of static electricity will be minimized.

d. The motor vehicle used to transport containers to the burning pad shall be positioned for unloading at the burning pad with the exhaust outlet on the opposite side from where the containers are to be removed or with the exhaust outlet as far away from the unloading point as possible. The motor shall be kept running during the unloading of the material.

e. During the dumping of material out of the container(s), if the transport vehicle is retained at the burning pad, it shall be moved back a minimum of 50 feet from the nearest material prior to opening any containers. The vehicle shall be returned to the stockpile area and its motor shut off prior to igniting the ignition train.

f. Motor vehicles may be used to deliver materials for successive burns provided a minimum distance of 50 feet is maintained from the previous burn pad. This requirement applies to any vehicle returning to the burn pad for any purpose after a burn has been completed. The 50-foot requirement is not applicable if 2 hours have elapsed since the wet down or 4 hours have elapsed if the pad has not been wet down. The use of hand-drawn dollies shall be held to a minimum.

g. Containers of materials shall be handled carefully at all times. They shall not be dragged over the floor of the truck or over the ground and shall not be thrown, pushed, or dumped from the truck to the ground. If the truck is not equipped with an elevator-type tailgate, the individual containers shall be lifted and placed on the ground by hand, one at a time. The containers shall be spaced evenly along the burning pad. If containers are palletized, place the pallets at the burning pad and unband. Do not remove containers from pallets in the vehicle.

13-2.3.3. Preparation of Material to be Burned. Material to be burned shall always be removed from containers, because attempts to burn certain material under even slight confinement may result in explosions. Material being burned must be examined carefully to make certain that no detonator or blasting cap is attached. Attempts to burn material containing ignition sources such as caps, detonators or fuzes will almost certainly result in an explosion. No unauthorized mixture of material with extraneous material, other explosives, detonators, or similar items shall be permitted. To avoid being damaged or dangerously overheated from the burn, all empty material containers shall be moved back from the burning pad a minimum of 100 feet prior to igniting the powder train.

13-2.3.4. Placement of Material on a Burning Pad. Prior to the delivery of any material to a burning pad, the pad shall be carefully inspected for the presence of dangerous objects or prohibited foreign material. If the burning pad has been used that day, it shall be inspected to make certain the surface is not dangerously warm and is free from flowing, smoldering, or burning embers and residue. It may be necessary to rake the burning surface to inspect for smoldering material and other dangerous conditions existing just beneath the surface before attempting a successive burn at the same burning pad. When material is found or if conditions are not safe, the burning pad shall not be used until safe conditions are restored. If required, the material to be burned shall be carefully placed on a bed of combustible material such as scrap lumber, wood, or excelsior. Open burning of chemically-treated wood is prohibited due to the release of toxic chemicals in the smoke and ash. Chemically treated wood must not be burned or used to initiate open-burning of explosives. All procedures related to the placement of material on burning pads should be performed per the Installation Hazardous Waste Management Plan.

13-2.3.5. Post Burn Requirements. The following requirements apply upon each completion of a burn cycle:

a. Personnel will remain in the protective shelter until all the material spread for burning has been consumed. If the crew shelter is located at least intraline distance from the burn site, personnel may leave the crew shelter after the fire has substantially subsided and a 30-minute post-ignition wait period has occurred. Personnel leaving the crew shelter shall leave the immediate area. Remote monitoring of the burn site shall continue until the chance of fire has passed.

b. After the burning has visually exhausted itself, a wait of at least 5 minutes is required prior to anyone returning to the burn pad. The supervisor and one operator shall then be allowed to return to inspect the general area of the burn for completeness of burn, heat retainment, and any other dangerous conditions. If no unusual condition exists, the area may be wet down thoroughly with water.

c. A period of at least 2 hours from the wet down time is required before successive burns are conducted on the same burning pad. If water facilities are not available or unfavorable weather conditions; for example, subfreezing temperatures exist, a period of 4 hours shall elapse prior to consideration of the pad for a successive burn.

d. Preparation for a successive burn can begin at a bed 50 feet and upwind from a previous burn, provided the previously used pad has been wet down thoroughly with water or a period of 4 hours has elapsed.

e. Successive burning cycles may be performed the same as the first as time permits.

13-3. TREATMENT BY DETONATION.

The following paragraphs identify the types of ammunition and explosives that can be treated by detonation, where and by whom the detonation operation should take place and the precautions that shall be observed during detonation operations.

13-3.1. TYPES OF AMMUNITION, EXPLOSIVES, AND OTHER HAZARDOUS MATERIAL TO BE TREATED BY DETONATION. Material may be destroyed directly by initiating the explosion of an item, or indirectly by the detonation of explosives placed in contact with the item(s). Destruction by detonation may be authorized for the following types of ammunition and explosives:

a. Detonators, both separate electric and percussion.

b. Large quantities of dynamite in bulk.

c. Explosive-loaded grenades.

d. Chemical Group C ammunition.

e. High explosive bombs.

f. Mortar ammunition.

g. Projectiles.

h. Rocket/missile warheads.

i. Mines.

j. Bulk initiating explosives.

NOTE

Under no circumstances shall ammunition and explosives be treated by detonation unless they are specifically identified and their characteristics are known.

13-3.2. GENERAL REQUIREMENTS FOR OPERATIONS. General requirements for detonation operations include choosing a detonation site and posting it, choosing materials to be disposed of by detonation or stock-piled awaiting treatment, selecting and protecting personnel, observing precautions

associated with the detonation process, and emergency procedures to be followed in case of an accident.

13-3.2.1. Requirements for Detonation Sites.

a. Operations shall be undertaken only in those areas or locations that specifically have been site approved for that purpose and for which a RCRA treatment permit has been issued. The classification of detonation sites approved prior to revision seven of this manual is shown in table 13-3. Siting of new detonation sites, as well as operations at existing detonation sites must meet inhabited building separation distances discussed in paragraph 13-1.8.1.b and tables 13-1 and 3-2. In instances when treatment takes place at another service facility such as an Army installation, the criteria established by the host activity shall be used. Minimum separation distances for non-essential personnel viewing the destruction of ammunition shall be determined as described in paragraph 13-1.8.

b. Detonation sites will be sited at intraline distances from other potential explosion sites, based on the net explosive weights at those sites.

c. All vegetation including dry grass, leaves, and other combustible materials shall be removed within a radius of 300 feet around the site, prior to conducting operations.

13-3.2.2. Demolition Training Ranges. Because the quantity of explosives required to maintain demolition and EOD proficiency is small, the criteria for training ranges can be reduced from the required criteria for other detonation sites. Table 13-4 provides the siting criteria for demolition training and explosives handling re-qualification. These ranges shall only be used for detonation of bare explosives charges (such as M112 Composition C-4 Demolition Blocks ("C-4") or items without a fragment hazard. When determining NEW, the initiation chain (that is, blasting caps, detonation cord, time fuze, shock tube, etc.) explosives weights are not required to be included. If a demolition explosive with a TNT equivalency for overpressure greater than that of C-4 (which has a TNT equivalency overpressure of 1.37%) is used, then the NEW calculation shall address the higher TNT equivalency, and the amount of explosives charge shall be adjusted downward accordingly; this is an exception to the requirement in EOD joint procedures to factor in TNT equivalency when performing intentional detonations. All vegetation including dry grass, leaves, and other combustible materials shall be removed within a radius of 50 feet from the point of detonation. The training range must be sited at intraline distances from other potential explosion sites, based on the net explosive weights at those sites. The following paragraphs provide other EOD proficiency training options, involving the use of small amounts of explosives, both on and off formally sited ranges. Any material potentially presenting an explosive hazard (MPPEH) generated by these training options must either be certified as material documented as safe (MDAS) or material documented as an explosive hazard (MDEH) as outlined in paragraph 13-15 before it leaves the training range or at the end of the training evolution for training taking place off of a designated range. Only personnel authorized as described in paragraph 13-15.11 and working under approved written procedures may move or otherwise manage or disposition MPPEH.

a. Explosively Operated Tool Kits. The inhabited building distance (IBD) may be reduced to 100 feet if the EOD training is done using explosively operated tool kits; however, the site must be barricaded as described in table 13-4, note d, and only inert ammunition items used for training.

b. Explosively-Driven Water Tools. Explosively-driven water tools (EDWT) can be used on site-approved detonation ranges or EOD proficiency ranges, or on USMC ranges managed and controlled in accordance with MCO 3570.1 (series) and MCO 3550.9 (series), provided the reduced quantity

distances established in the following paragraphs remain within the established quantity distance arcs for the specific ranges. All other locations where EDWT are used will require site approval requests.

(1) Reduced quantity distance is based on K328, with a 100-foot minimum distance. The NEW used in the calculation includes the NEW of all main charges (total weight of all explosive substances - not storage NEW), to include detonation cord used as a main water-propulsion charge, but excludes the explosive weight of the main charge initiation chain (that is, blasting caps, time fuze, shock tube, etc.). The presence of a barricade does not eliminate the 100-foot minimum distance or K328 distance.

(2) TNT equivalence does not need to be considered for explosives with TNT equivalency < C4 (1.37 for overpressure). If explosives with TNT equivalency (overpressure) > C4 are used, they shall be factored into determining the NEW and the required quantity distance.

(3) When used on an EOD proficiency range, all debris must be removed prior to use of the proficiency range to eliminate fragment throw, as these ranges are sited solely on the basis of blast overpressure.

(4) EDWT shall only be used against inert targets free of energetic material, explosives, flammable gas and vapors. Examples include dummy, empty, and inert-filled munitions, brief cases, pipe bombs, back packs, pressure cookers and passenger vehicles such as sedans or vans, and other items used to replicate improvised explosives devices. A target may be used for multiple shots, provided it retains structural integrity, to preclude increased debris during subsequent shots.

(5) Reduced quantity distances are only authorized for the following EDWT items: Aqua Ram, Big Mike, Boot Banger, Bottler, Exit Change, Hydra-Jet, Mineral Water Bottle (MWB), Modular Large Vehicle Disrupter (MLVD), and Vantreppan.

c. Percussion Actuated Neutralizer. Water driven percussion actuated neutralizer shots may be used with a 100-foot inhabited building distance (IBD), without applying the barricading requirements of table 13-4, or the need to submit an explosives safety site approval in accordance with paragraph 8-1.2.1, provided the following procedures are followed:

(1) Only inert targets shall be used.

(2) Only mission essential quantities of nonelectric (NONEL) pyrotechnic lead (Shock Tube) and propellant cartridges, necessary for the training evolution being conducted are permitted at the training area.

(3) Only lightweight plastic plugs can be used to seal water in the barrel.

(4) An SOP must address all aspects of a typical training evolution.

(5) Authorizations for percussion actuated neutralizer training sites will be obtained through the host activity explosives safety officer (ESO). The request must record the location, with the 100-foot IBD arc, on a scaled base map; any structures within the arc; procedures used to control access to the encumbered area; dates/times of usage; and certification that all material used/consumed during the training will be removed and properly disposed of after the evolution is complete. If there is a range control office on the activity, both the range office and the ESO office must approve the training location.

(6) The ESO office must maintain a record of training authorizations that includes all the elements required in paragraph 13-3.2.2, and establish procedures for notifying base security, fire and any other agencies that could be impacted by the training.

(7) Training on Marine Corps activities will be requested through the local range control office.

Table 13-3. Classifications of Detonation Sites

Class of Detonation Site	Quantity (in lbs) of Explosive		Distance (in ft) from Point of Detonation to:					Earth Cover Required
	Over	Not Over	Inhabited Building (6)	Radius of Cleared Area	Barricaded Crew Shelter (1)	Non-Sheltered Retreat Area	Explosive Holding Area (2)	
A	500	3000	5000	500	1000	5000	1800	No
B	150	500	3000	500	500	3000	1245	Yes (3)
C	25	150	2500	500	300	2500	1245	Yes (3)
D (5)	0	25	2500 (4)	500	200	1800 (4)	1245	Yes (3)

NOTES:

1. These are the desired recommended distances and may be reduced; however, under no circumstances shall the distances be less than the intraline distances based on the maximum quantity of explosive involved for each special class of site. If these distances are reduced, personnel in the shelter may require ear protection.

2. These are the desired recommended distances and may be reduced to the intraline barricaded distance provided the holding area is afforded as a minimum overhead and frontal protection.

3. Earth cover required only when missile hazard is a safety factor.

4. May be reduced when maximum fragment throw range is known. See paragraph 13-1.8.

5. Demolition training sites using 5 pounds explosives or less may be sited in accordance with paragraph 13-3.2.2.

6. The criteria of paragraph 13-1.8.1.b must be applied for the detonation of fragmenting explosive materials.

Table 13-4. Demolition Training Ranges

Quantity in Pounds of Explosives (note f)		Inhabited Building Distance (ft)	Restrictions
Over	Not Over		
2.5	5.0	500	Notes a, b, and c. Note d should be applied unless the barricade would pose an operational hazard.
1.25	2.5	300	Notes a, b, c, and d.
0	1.25	200	Notes a, b, c, and d.

NOTES:

1. Only bare charges, or non-fragment-producing explosives will be used.

2. All detonations will be conducted on a 12-inch deep sandpit to eliminate secondary fragment hazards.

3. Inhabited building separation distances will not be further reduced due to public traffic routes or use of EOD protective devices.

4. A barricade shall be constructed 10 feet from the detonation point. The barricade will totally enclose the detonation site, be the equivalent of two sandbags thick, six feet high, and have two entrances 180° apart. Each entrance must also be barricaded to the same requirements to assure protection from fragments as shown in figure 13-1.

5. Reduced distances apply if training involves tools; see paragraph 13-3.2.2.a and 13-3.2.2.b.

6. Explosive weights reflect TNT equivalency of C-4 explosive (1.37%) or less. If TNT equivalency is greater, the charge must be adjusted downward accordingly.

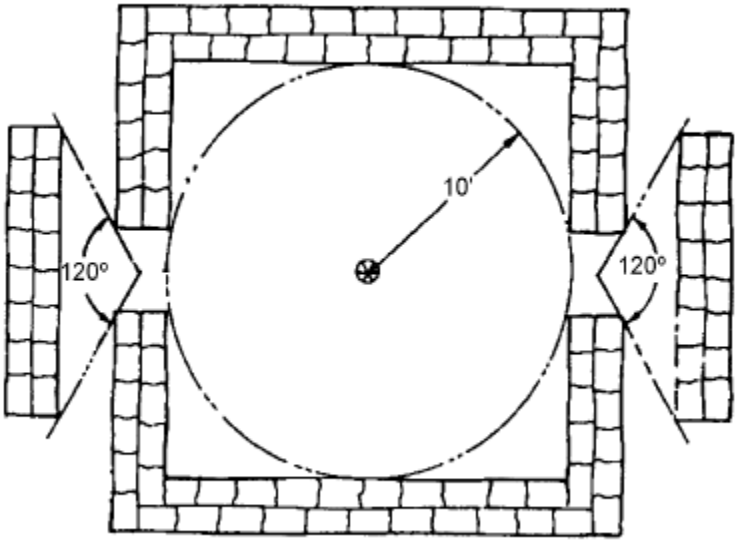

Figure 13-1. Detonation Training Range

13-3.2.3. Posting of Prescribed Procedures. Prescribed procedures specific to the treatment of materials or items by detonation as well as established station orders or regulations for the operation of detonation sites shall be posted at the detonation site.

13-3.2.4. Treatment Personnel. The following requirements apply to selection and protection of personnel conducting detonation operations:

a. Assignment. The requirements of paragraph 13-2.2.3.a shall apply when assigning personnel to operations at detonation sites.

b. Protection. Each detonation site shall provide a crew-protective area that may include a personnel shelter. If such a shelter is used, it shall be site approved by NOSSA, shall have overhead protection and frontal protection with no direct viewing ports. Mirrors or periscopes may be used for visual observation. All windows shall be polycarbonate (minimum ½-inch thickness) of sufficient strength to resist the calculated overpressure. The required distance from the point of detonation, for various quantities of explosive to be detonated, shall be in accordance with the site classifications in table 13-3. The specific design of the crew shelter shall be submitted to NOSSA for review and approval. There also shall be an emergency area or shelter available at the detonation site for personnel to use in emergency situations. This area/shelter, a 4-foot hole or 4-foot earthen embankment, for example, shall provide personnel protection from high velocity fragmentation. The emergency area/shelter shall not be used for normal operations, but shall be used only when it is impossible for personnel to reach the protective crew shelter.

13-3.2.5. Firefighting Equipment. When the fire hazard is high in wooded and grassy areas because of dry conditions, treatment operations shall be undertaken only if properly manned mobile firefighting equipment is standing by in a safe location or can be made readily available within 5 minutes.

13-3.2.6. Communications. See the requirements for communications equipment in paragraph 13-2.2.5.

13-3.2.7. Warning Signals. The requirements for warning signals at burning sites described in paragraph 13-2.2.6 also apply to detonation sites.

13-3.2.8. Weather Conditions. Prior to detonation, the supervisor or EOD officer in charge shall obtain information on local cloud and air mass conditions from the nearest weather station. Detonation shall not be performed during periods of heavy, low total overcast or during electrical storms. This person shall decide whether to conduct detonation operations based on weather conditions and RCRA permitting requirements.

13-3.2.9. Accidents. Refer to paragraph 13-2.2.8 for reporting requirements concerning accidents at detonation sites.

13-3.2.10. Material Stockpiling. The required distance between the detonation site and explosive material awaiting treatment will vary in accordance with the class of the approved site. However, in no case shall explosive material be stored at less than intraline distance from the explosive being destroyed based on the largest quantity involved. No one shall be assigned to the storage area when actual detonation operations are underway. No material shall be staged at the detonation site.

13-3.3. SPECIFIC REQUIREMENTS FOR DETONATION OPERATIONS. The placement of the ignition charge, the method of priming, and other requirements pertaining to the particular ammunition to be detonated are prescribed by the SOP in accordance with the requirements of chapter 2. In addition, the following requirements apply.

13-3.3.1. Safety Requirements. The following safety requirements are to be followed during detonation operations:

a. The number of personnel conducting detonation operations shall be kept to a minimum, but under no circumstances shall an operator work alone.

b. When detonation operations are underway, no personnel shall be stationed at or near material awaiting treatment at the stockpile area.

c. After detonation operations have been completed, the demolition crew shall remain in the protective crew area at least 5 minutes after single shots and the last shot of a series, provided that the number of shots have been counted. Operations shall be scheduled so that detonations will not occur less than 60 minutes prior to securing the range at the end of the workday.

d. Misfire procedures: If electric blasting caps or non-electric blasting cap, detonator, or booster are in a shock tube/MDI firing system where the shock tube has functioned but the blasting cap, detonator, or booster has not, a 30-minute waiting period is required. If solid time fuzes and non-electric blasting caps are involved, a 60-minute waiting period is required. Misfires shall be handled under the direction of the person in charge of the operation and firing wires shall be carefully traced and a search made for unexploded charges.

e. The fire department shall be notified of all detonation operations, be informed as to the types of explosives material being disposed of, and be given the calculated fragmentation/blast hazard distances. At no time will firefighters be allowed to enter the fragmentation/blast hazard zone if the

possibility exist that the explosive material itself is still burning. The range shall not be secured if any probability of fire exists.

f. Only authorized spark resistant tools shall be used while working within a radius of 15 feet from exposed energetic material. However, a clean sharp knife may be used for cutting time blasting fuze/detonating cord.

g. Treatment operations shall be performed during daylight hours only.

h. Blasting caps shall be primed only after all operators except those doing the actual ignition work have retreated to the protective crew shelter. Blasting caps shall be carefully handled at all times.

i. Ammunition and explosives to be treated shall not be handled roughly or carelessly. Regulations for handling ammunition and explosives prescribed in other chapters of this manual shall be observed. Extra care should be taken since, in most instances, the hazards of the ammunition or explosives to be treated are increased as a result of age, deterioration, or damage. See paragraph 13-3.3.3.

j. Personnel should anticipate the possible presence of spark and flame discharges from the accumulation of electrostatic charges and take necessary precautions to minimize their potential hazard.

k. If the material being treated produces high fragmentation, the detonation shall take place at an area surrounded by an earth barrier at least 4 feet high or in a pit or trench at least 4 feet deep. Unless the demolition site meets the requirements for class A as specified in table 13-3, a covering of earth shall be used to effectively limit the range of fragments.

13-3.3.2. Delivery of Ammunition, Explosive and other Hazardous Material to Detonation Site.

a. The motor vehicle used to transport material to the demolition ground shall meet the requirements of SW020-AG-SAF-010.

b. Only the driver and two helpers shall ride in or on a vehicle transporting explosive material. The driver shall be qualified to transport material in accordance with SW020-AF-HBK-010.

13-3.3.3. Requirements for Handling Material at a Detonation Site.

a. Material appearing to be in an unusual or abnormal condition should not be unbanded or removed from its pallet. All personnel shall report the condition of this material to their immediate supervisor. The supervisor shall proceed as follows:

(1) If, in the supervisor's opinion, further movement of the material will create an additional hazard, the material shall not be moved. All personnel shall be evacuated from the immediate area, and the supervisor shall take appropriate steps to eliminate the hazard.

(2) If, in the supervisor's opinion, the material does not present an abnormal or hazardous condition, the material should be handled as usual.

b. The delivery vehicle and all handling equipment shall be moved from the area and shut off before preparing and priming the material for detonation. All pallets and other containers shall be moved to the stockpile area before preparing the ignition train.

13-3.3.4. Post-Detonation Requirements. A waiting period specified by local SOP, but no less than that specified in paragraph 13-3.3.1.c shall be observed. Subsequently, a careful search of the surrounding grounds for unexploded ammunition or explosives shall be conducted. Unexploded items or material such as lumps of explosive or unfuzed ammunition may be collected and made ready for the next detonation. Fuzed ammunition or items that may have internally damaged components should be detonated where found.

13-4. SPECIFIC PROCEDURES FOR THE TREATMENT OF HIGH EXPLOSIVES.

High explosives include primary, booster, and main charge explosives. Black powder, while not a high explosive, is included in this grouping. Additional information can be obtained by contacting the Program Manager, In-service Engineering Agent/Cognizant Field Activity (ISEA/CFA) and NSWC IHD.

13-4.1. BLACK POWDER. Black powder may be treated by burning. The following procedure shall be followed:

a. Contents of only one container, not exceeding 25 pounds, shall be burned at one pad. Containers of black powder shall be opened one at a time.

b. The powder to be burned shall be removed from the container and distributed in a trail over the burning surface, which has been free of fire for at least 24 hours. The powder trail shall not exceed 2 inches in width. No part of the trail shall parallel any other part at a distance of less than 10 feet and no part of the trail shall cross any other part.

c. The black powder shall be ignited by an electric squib firing system or safety time fuse and igniter, or non-explosive electric ignition device.

d. Emptied containers shall be flashed or thoroughly flushed with water. If flushed, the water must be handled as hazardous waste until tested by the activities environmental office.

13-4.2. HIGH EXPLOSIVES. High explosives should be treated by burning as described in paragraph 13-2. Regulations are as follows:

13-4.2.1. Burning. Destruction of bulk high explosives by burning should be in accordance with the following requirements:

a. Weight of Explosive. The types and maximum weight limits of explosives, which may be destroyed by burning, are presented in table 13-5. It is emphasized that the limits set forth are the maximum weights allowable per explosive pile. The pile should be as small as can practically comply with local and RCRA requirements.

b. Pile Separation Distance. The simultaneous burning of as many piles of high explosives as can be accommodated on the burning pad is authorized provided the distance between piles and the weight of the piles are limited in accordance with table 13-5.

c. figure 13-2 depicts a typical high explosive burning area layout. The minimum distances are established in table 13-5.

d. Explosives having particle size larger than 2-inch cube should not be accepted at the burning pad unless approved by local commanding officer based on a hazard analysis in accordance with paragraph 2-1.2.

e. Explosives to be burned must be examined carefully to make certain no detonator or blasting cap is included. Any attempt to burn high explosives with ignition sources such as caps, detonators, or fuzes will almost certainly result in an explosion.

f. Only one kind or type of explosive shall be burned at one time on any one pad except that small quantities, up to 25 pounds total of mixed explosives derived from various production operations, may be spread and burned as a single explosive unless larger quantities are authorized by NOSSA.

Table 13-5. Maximum Weight Limit for Burning High Explosives

Explosive	Maximum Weight Limit (lbs)	Pile Separation (ft)
Amatol	500	100
Black Powder	25	50
Composition “A”	500	100
Composition “B”	500	100
Composition “C”	500	100
Cyclotol	500	100
Explosive “D”	500	100
HBX Composition	500	100
H-6	500	100
Minol II	500	100
Nitroguanidine, Dry	500	100
**Nitroguanidine, Wet	50	100
Octol	200	100
*PBX	200	100
PBXN	200	100
PBXW	200	100
*Pentolite	25	50
***PETN	25	50
*Picratol	200	100
***RDX/HMX	50	100
Tetryl	50	50
*Tetrytol	50	50
TNT	500	100
Torpex	50	50
*Tritonal	500	100

*The burn weight limit and pile separation distance for this material have not been firmly established. Therefore, when burning these items the weight limit and the separation distance should be determined carefully by starting with a very limited number of pounds of explosive and the separation distance shown. The weight limit may then gradually be increased. However, the maximum limit specified shall not be exceeded.

**Wet Nitroguanidine has been found to be very difficult to burn. The piles should be saturated with fuel oil or similar material in accordance with the local environmental operating permit.

***These explosives should be shipped to the burning ground wet, spread on the burning surface and allowed to partially dry, prior to ignition.

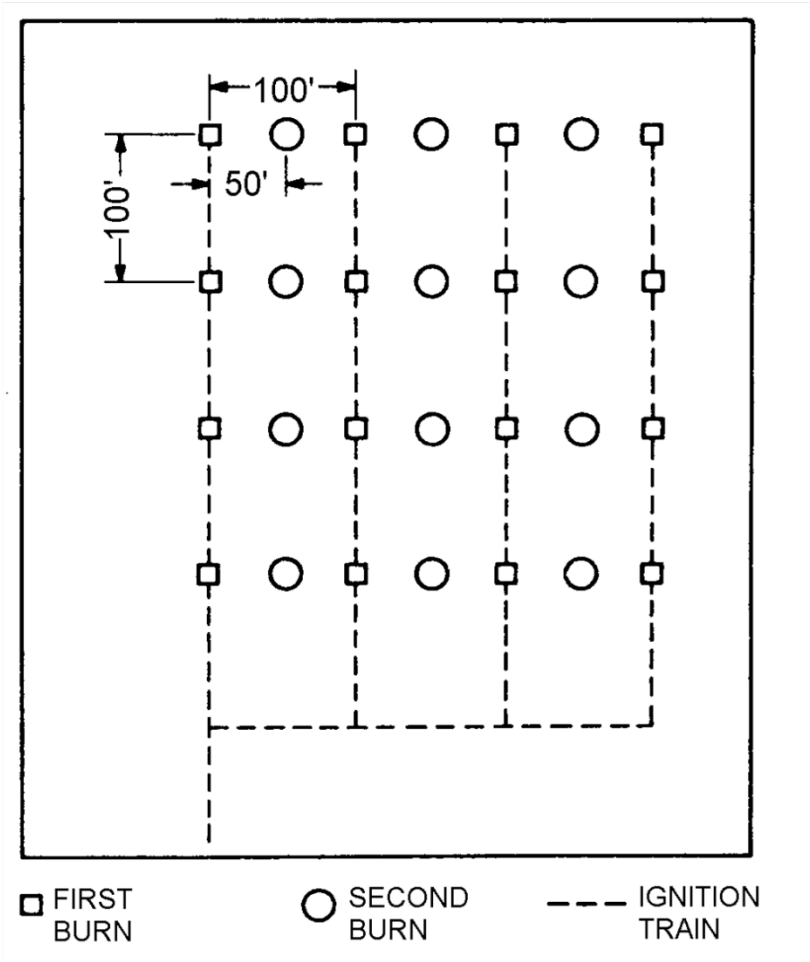

Figure 13-2. Typical High Explosives Burning Area

NOTES:

1. When more than one pad of explosives is prepared, the pads may be connected with a continuous ignition train as shown above.

2. The distance between successive burns shall be a minimum of 50 feet as required in paragraph 13-2.3.5.

g. If explosives are delivered for burning in a not readily combustible condition, such as water wet, provisions shall be made to ensure complete burning. One method of ensuring complete combustion is to spread the explosives on a pad of combustible material soaked with fuel oil meeting environmental regulations. The combustible material used shall be scrap lumber, wood or other material such as excelsior. Where such materials are used, they shall be spread a minimum of 2 inches deep on the pad prior to spreading explosives.

(1) When more than one pad of explosives is prepared, the pads may be connected with a continuous ignition train as shown above.

(2) The distance between successive burns shall be a minimum of 50 feet as required in paragraph 13-2.3.5.

h. Each operator (or pair of operators, if two are required to handle containers due to size) shall open only one container at a time, and it shall be emptied of its contents and the lid replaced before another container is opened. When explosive is delivered in metal containers, the grounding requirements specified for smokeless powder in paragraph 13-5.1 apply.

i. Explosives shall be spread evenly over the burning surface in a uniform thickness. The maximum thickness of the explosive should be limited to 2 inches unless approved by local commanding officer based on a hazard analysis in accordance with paragraph 2-1.2.

j. Prepare the ignition train and ignite it.

k. Inspection and wet down of the pad shall be in accordance with paragraph 13-2.3.5.

l. Preparation for successive burns may commence in accordance with paragraph 13-2.3.5.

13-4.3. PRIMARY (INITIATING) EXPLOSIVES. When necessary, large quantities of primary explosives such as lead azide, lead styphnate, and mercury fulminate shall usually be treated by detonation.

13-5. TREATMENT OF PROPELLANTS.

Precautions for the safe treatment of smokeless powder and nitrocellulose are described in the following paragraphs. Additional information can be obtained by contacting the Program Manager, ISEA/CFA and NSWC IHD.

13-5.1. SMOKELESS POWDER AND CASTING POWDER. Smokeless powder and casting powder, including sheets, flakes, shavings of ballistite, and bag charges should be treated by burning.

13-5.1.1. Special Instructions for Burning Bulk Smokeless Powder and Casting Powder. In addition to the general requirements contained in paragraph 13-2 for the burning of hazardous material, the following shall apply for burning bulk smokeless powder and casting powder:

a. Bulk smokeless powder and casting powder shall be transported to the burning ground in closed, standard, smokeless powder containers, approved fiberboard containers, closed powder charge tanks or conductive plastic bags.

b. No more than 4,000 pounds of smokeless powder and casting powder shall be transported to the burning pad area at one time.

c. Containers of smokeless powder and casting powder shall not be exposed to direct sunlight long enough to raise the temperature of the powder above 100 degrees Fahrenheit (°F). Containers that require protection from the sun shall be covered with a fire-resistant tarpaulin placed so that air can circulate through the stack. The rate of decomposition becomes relatively high at 100° F, and is dangerously accelerated at temperatures above 110° F, when spontaneous combustion of the powder can result.

d. The container and lid shall be electrically bonded. The container shall be grounded before the lid is removed, and the powder is dumped. Equipment used to ground containers during lid removal,

dumping of powder, and lid replacement shall be tested for conductivity prior to each day's operation. The maximum acceptable value for electrical resistance to ground shall be 100,000 ohms. Bonding of the container to the lid is not necessary if the powder inside the container is sealed inside a conductive bag. In this case, the powder and bag shall be removed as a unit from the container, and the bag shall remain sealed until it is placed in the burn pan.

e. Each operator or pair of operators, if two are required to handle containers due to size, shall open only one container at a time, empty its contents, and replace the lid before another container is opened.

f. The grounding shall not be removed until the lid is replaced on the container.

g. Not more than 4,000 pounds of large web smokeless powder and casting powder shall be burned at one time. However, the burn amount will not exceed the quantities specified in the RCRA permit. If the powder is small web, the maximum amount burned at one time shall be limited to 2,000 pounds. The size of powder grains in 3-inch cartridges and smaller is considered small web.

h. The smokeless powder and casting powder to be burned shall be spread in straight rows approximately 4 feet wide and not more than 6 inches deep for large web smokeless powder or not more than 3 inches deep for small web smokeless powder.

i. Care shall be taken to avoid walking on the dumped powder.

j. Operations shall be arranged to minimize exposure of personnel should a fire be initiated at any point along the burning pad.

k. The ignition train shall be laid and ignited.

l. Inspection and wet down of the pad shall be in accordance with paragraph 13-2.3.5.

m. Preparation for successive burns should be accomplished in accordance with paragraph 13-2.3.5.

13-5.2. NITROCELLULOSE. Nitrocellulose should be treated by burning in accordance with the procedure listed below.

a. Not more than 500 pounds of solvent or water wet nitrocellulose shall be burned at one time unless larger amounts are approved by NOSSA and if practical, smaller increments should be treated.

b. Nitrocellulose to be treated by burning shall be water-wet with not less than 25%, by weight, of water or flammable solvent and it shall be contained in suitable metallic containers, such as steel drums, for delivery to the burning area.

c. A layer of combustible scrap lumber and excelsior can be arranged on the burning surface with enough wood cribbing used under the layer or pile to provide a good draft and complete combustion.

d. The wet nitrocellulose to be burned shall be removed from the transportation containers by means of wooden or nonferrous shovels and evenly spread on the pile of lumber in a layer not thicker than 2 inches, unless a greater thickness is authorized by the local commanding officer based on a hazard analysis in accordance with paragraph 2-1.2.

e. Successive increments of nitrocellulose to be treated shall be positioned only one at a time, and a burning site shall not be used twice in the same day. The immediate area or site over which an increment of nitrocellulose is to be spread for treating shall be carefully inspected as required by paragraph 13-2.3.1 prior to spreading the material.

f. The ashes remaining from the treating of any quantity of nitrocellulose shall be wet down with water at the end of each operating day and carefully inspected and screened for any particles or fibers of unburned nitrocellulose.

g. No personnel shall approach the burning site following the burning of an increment of nitrocellulose until the fire has burned out and the nitrocellulose has been completely treated. In the event of a misfire in the ignition train, personnel shall not approach the site for at least 60 minutes. Dry nitrocellulose is exceedingly sensitive and will cause very hot flash-fires. Therefore, all equipment, such as transportation vehicles, containers, tools, and the clothing of personnel, shall be thoroughly cleaned and made free of all traces of nitrocellulose which would constitute a hazardous condition when dry.

13-6. TREATMENT OF SEPARATE LOADING AMMUNITION CHARGES.

Separate loading ammunition charges may be treated by burning. Special precautions for treatment of separate loading ammunition charges are the same as for treating smokeless powder. Refer to paragraph 13-5.1. Additional information can be obtained by contacting the Program Manager, ISEA/CFA and NSWC IHD.

13-6.1. SPECIAL INSTRUCTIONS FOR TREATING SMOKELESS POWDER BAG CHARGES. In addition to the requirements contained in paragraph 13-2 for treating hazardous material in general, the following shall apply for treating smokeless powder bag charges:

a. Except when palletized in horizontal position, the bottom of the tanked charge must be held lower than the top (top end up) to prevent the build-up of static charges from the shifting of the charges within the tank.

b. The quantity of smokeless powder bag charges to be transported to the burning pad at one time shall not exceed 4,000 pounds.

c. The tanked charges shall not be placed on the burning surface exposed to the direct rays of the sun for any period of time longer than necessary to complete burning operations.

d. The tank and its lid shall be electrically bonded and the tank grounded before the lid is removed and the bag charge removed from the tank. If primers are present (Marine Corps ammunition), they shall be removed and packed into an ammunition box marked for later disposition. Spacers shall be left in their respective tanks. Grounding equipment used to ground the containers during lid removal, removal of bag charges, and lid replacement shall be tested for conductivity prior to each day's operation. The maximum acceptable value for electrical resistance to ground shall be 100,000 ohms.

e. Each operator (or pair of operators if two are required to handle the containers due to size) shall open only one tank at a time and the bag charges shall be removed and the lid replaced before another tank is opened.

f. The grounding is not to be removed until the lid is placed back on the tank.

g. The bags shall be placed on the burning surface with the laced side up in a single row side by side with all ignition ends facing the same direction.

h. The explosive limit of the bag charges for one burn shall not exceed 4,000 pounds, including the black powder ignition ends.

i. Prepare the ignition train and ignite.

j. Inspection and wet-down of the pad shall be in accordance with paragraph 13-2.3.5.

k. Preparation for successive burns may commence in accordance with paragraph 13-2.3.5.

13-7. TREATMENT OF GUN AMMUNITION.

Gun ammunition includes the components of fixed ammunition such as projectiles, cartridge cases, and other miscellaneous components. Additional information can be obtained by contacting the Program Manager, ISEA/CFA and NSWC IHD.

13-7.1. TREATMENT OF PROJECTILES. Projectiles, including those resulting from breakdown of fixed ammunition, may be treated by detonation. The following procedures should be used when treating projectiles by detonation:

a. The projectiles to be treated shall be placed on their sides in a pit or trench that is at least 4 feet deep.

b. Demolition explosive blocks shall be placed in contact with the sides of each projectile and held in position by earth packed around the projectile and blocks. The number of blocks to be used for each caliber of projectile is shown in table 13-6.

Table 13-6. TNT Demolition Blocks Required for the Destruction of Projectiles

Projectile (Caliber)	Number of 1/2-lb TNT Blocks or Equivalent Required
40 mm	1
3-inch	2
4-inch to 6-inch	3
8-inch	3
12-inch to 16-inch	6

c. The projectile shall be covered with 2 or more feet or as specified in the RCRA permit of earth to reduce the range of fragments upon detonation.

d. After the last shot, the ground in the vicinity shall be searched for any unexploded material (see paragraph 13-3.3.4). Any such material found shall be further treated.

13-7.2. TREATMENT OF CARTRIDGE CASES. Cartridge cases intended for treatment shall be emptied of smokeless powder, the primer fired or removed as specified in current instructions, and the

case disposed of in accordance with current instructions. The powder shall be treated in accordance with paragraph 13-5.1.

13-8. TREATMENT OF SMALL ARMS AMMUNITION.

Small-arms ammunition may be treated by thermal treatment, provided all methods meet environmental permitting requirements (for example, RCRA, Clean Air Act). Additional information can be obtained by contacting NOSSA.

NOTE

Deformers are not considered to be a RCRA treatment process; therefore a RCRA permit is not required. Destruction in demilitarization processing equipment (deformer) meets U.S. Trade Security Controls to render useless beyond the possibility of restoration for use as a cartridge or shell casing, and makes the material eligible for direct sales to reimburse activity Qualified Recycling Programs.

1-1.1. SITING SMALL-ARMS TREATMENT SITES. Furnaces and incinerators used for treatment of small-arms ammunition, up to and including 20mm (TP) must be sited at distance specified in table 7-22, respective of other facilities. Furnaces and incinerators used for treatment of material of higher hazard classification shall be sited at appropriate intraline or inhabited building distances based on material hazard, quantity, and potential targets. Furnaces and incinerators must be sited at intraline distance from any other potential explosion site (PES).

13-9. TREATMENT OF BOMBS AND BOMB-TYPE AMMUNITION.

Explosive bombs and bomb-type ammunition may be treated by detonation following the requirements and precautions for treatment of projectiles. Refer to paragraph 13-7. Additional information can be obtained by contacting the Program Manager, ISEA/CFA and NSWC IHD. Since bombs and bomb-type ammunition have thin walls and contain more explosive than projectiles of corresponding weights, extreme caution must be taken to avoid structural damage to buildings and injury to personnel resulting primarily from blast. Bombs awaiting treatment in the immediate vicinity of the detonating pit or trench should be segregated in small piles 100 feet or more apart and at least 500 feet from the pit. Extreme care must be taken to protect bombs awaiting treatment against accidental initiation by fire, fragments, or propagation.

13-10. TREATMENT OF ROCKETS AND SOLID PROPELLANT MOTORS.

Rocket motors containing solid propellants should not be treated by detonation. Additional information can be obtained by contacting the Program Manager, ISEA/CFA and NSWC IHD.

a. Infantry and aircraft type high explosive (HE) and practice rockets shall be treated as follows:

(1) Wherever practical, separate the rocket motor from the HE head and treat the head as specified for projectiles. If separation of the motor and head is impractical, short-range rockets may be treated in pits in the manner prescribed by paragraph 13-7.1. Sufficient charge must be used to assure destruction, in place, of the motor and head.

(2) In certain rocket motors the propellant cannot be removed from the motor. In this case, the nozzle shall be removed, the motors firmly held and the propellant treated. Rocket motors greater than 8 inches in diameter shall be treated according to paragraph c below.

b. Wherever practical, propellant must be removed from rocket motors and treated by burning. In the event removal of the propellant is not practical, the rocket motor should be positioned or restricted to prevent movement and propellant in the units shall be treated by static firing.

c. Rocket or missile propellants (solid) may weigh as much as several thousand pounds per grain, and the polymer-oxidizer type may be extremely difficult to ignite at atmospheric pressures. Large size rocket motors for specific systems may be treated in accordance with instructions contained in technical manuals applicable to such units.

1-1.1. TREATMENT OF ENERGETIC LIQUIDS. For information regarding the treatment of energetic liquids including fuels, oxidizers and catalysts, refer to Chemical Propulsion Information Agency (CPIA) Hazards of Chemical Rockets and Propellants Handbook, Volume III; NAVSEA S6340-AA-MMA-010 and other applicable weapon publications.

13-11. TREATMENT OF EXPLOSIVE INITIATING DEVICES, FUZES, BOOSTERS, PRIMERS, AND TRACERS.

Fuzes, boosters, and detonators should be treated by detonation. Additional information can be obtained by contacting the Program Manager, ISEA/CFA and NSWC IHD.

13-11.1. SAFETY PRECAUTIONS. Since all the operations involved in the treatment of detonators are of a highly dangerous nature, all precautions shall be taken to prevent accidents. Sufficient time must elapse after the explosion before proceeding to the scene of detonation (see paragraph 13-3.3.1). In case of a misfire, the circuit must be broken in such a manner that it cannot be accidentally closed while personnel are not behind the barricade.

13-11.2. PRIMERS. Small and large primers shall be treated by different methods, as described below.

13-11.2.1. Small Primers. Small primers; that is, primers that have an ignition charge of less than 30 grains shall be treated in accordance with the RCRA permit. The stock of primers awaiting destruction shall not be allowed within 500 feet of the burning operations, and care shall be taken to protect the pile from accidental ignition by flying fragments or sparks. This stock shall be limited to a day's supply.

13-11.2.2. Large Primers. Large primers; that is, primers that have an ignition charge of 30 grains or more, are subject to explode in mass if treated in large quantities by burning. These types should be treated as described in paragraph 13-8 for small-arms ammunition, except that only one primer should be dropped down the chute at a time and the operator shall wait until it has exploded before introducing another primer into the chute.

13-11.2.3. Batch treatment. Small quantities of large and small primers may be disposed of by batch burning in a containment vessel. The primers shall be spread into a single layer with sufficient separation between primers to prevent mass detonation. A layer of combustible material located below the primers shall provide the heat/fire to treat the primers. The containment vessel shall be designed to contain the fragments from the burning of the primers.

13-11.3. TRACER MIX. Tracer mix is to be burned. The treatment shall be accomplished in the same manner as that for bulk high explosives (paragraph 13-4.2.1) except that not more than 50 pounds shall be treated at one time.

13-12. TREATMENT OF GRENADES, MORTAR AMMUNITION, AND LAND MINES.

Additional information can be obtained by contacting the Program Manager, ISEA/CFA and NSWC IHD.

13-12.1. GRENADES. Grenades include explosive hand and rifle grenades and chemical hand and rifle grenades.

13-12.1.1. Explosive Hand and Rifle Grenades. Grenades may be treated by detonation following safety precautions applicable to projectiles in accordance with paragraph 13-7. If detonation is authorized, not more than 20 hand grenades or 50 40mm rifle grenades shall be piled in close contact with each other in the pit. Sufficient numbers of demolition blocks shall be placed on top of the pile to ensure complete explosive continuity between all grenades and demolition material.

13-12.1.2. White Phosphorous (WP) Grenades. WP is known to cause adverse impact to waterfowl and their respective environment. Due to the presence of boosters and the likelihood of detonation during burning, grenades loaded with WP shall be treated by detonation as a last resort and only at RCRA permitted facilities/activities. Demolition materials shall be placed under the item(s) to propel the WP into the air to facilitate complete treatment. All efforts shall be made to send WP to a RCRA permitted Army ammunition facility or other activity permitted and capable of recovering/recycling or properly treating WP in accordance with permit requirements. Grenades loaded with other chemical and/or pyrotechnics may be destroyed in accordance with paragraphs 13-1 through 13-3 based on chemical or pyrotechnic fill, with guidance provided by NAVSEA SW073-AC-MMA-010.

13-12.2. MORTAR AMMUNITION. Mortar ammunition may be treated by detonation in the same manner as projectiles as described in paragraph 13-7. WP rounds shall be treated in accordance with paragraph 13-12.1.2. Illuminating shells and flare shells shall be treated as pyrotechnics in accordance with paragraph 13-13. Two ½-pound demolition blocks are required for detonating each 60 and 81 mm mortar projectile. High capacity mortar projectiles contain a larger bursting charge than other types of projectiles of the same caliber. Additional care should be taken to limit the number of projectiles treated at any one time, in accordance with paragraph 13-7, and to protect projectiles awaiting treatment from fragments.

13-12.3. LAND MINES AND GROUND-TYPE ROCKETS. For treatment of land mines and ground-type rockets, refer to the appropriate Army, Marine Corps, or other technical manual and paragraph 13-10.

13-13. TREATMENT OF PYROTECHNICS.

13-13.1. GENERAL INSTRUCTIONS. Pyrotechnics that do not, upon ignition, eject canisters, burning signals, grenades, or similar items may be treated by burning as described in paragraph 13-2. These pyrotechnics include those containing pressed pyrotechnic compositions. However, if the applicability of these treatment procedures to an item is in doubt, contact the Program Manager,

ISEA/CFA and/or NSWC IHD. The following instructions are prescribed in addition to those given in paragraph 13-2.

a. Clean trench of all scrap from previous burns.

(1) There shall be a 36-hour cooling down period after the previous burn before the trench is cleaned. If water is used to cool the trench and its contents, a minimum of 18 hours shall elapse prior to cleaning.

(2) Burned or unburned items found during cleanup may be picked up and prepared for the next burn. Fuzed items, which may have internally damaged components, should not be moved but destroyed in place.

(3) Material awaiting treatment shall remain in the stockpile area during cleaning of the trench.

(4) The trench shall be cleaned of all scrap from previous burns before loading trench for next burn.

b. Load trench with dunnage.

(1) Operators shall, when loading trench with excelsior, wood or similar flammable material, pay attention not to overload the trench so as to nullify the effects of the earthen barricades. However, there should be sufficient quantity to sustain a hot fire for a minimum of 30 minutes in the bottom of the trench.

(2) Operators may soak dunnage with oil to aid in producing a hot fire. However, the oil should be applied uniformly.

c. Prepare items for burning.

(1) Operators shall remove items from metal containers. Pyrotechnic items shall not be burned in sealed metal containers.

(2) The operators shall be instructed in the increased hazards of pyrotechnics as they age, deteriorate or become damaged, and how to protect pyrotechnics against shock.

d. Load trench with items.

(1) The maximum pound of explosive allowed per trench is limited to two times the area in square feet of the trench. For example, a trench measuring 4 feet wide by 50 feet long equals 200 square feet; the explosive limit for this trench is 400 pounds.

(2) When burning aircraft parachute flares, place them in a single row, side by side, a minimum of 1-foot apart. The explosive content of trench shall not exceed the explosive limits given above.

(3) The trench shall be filled no more than within 2 feet of the top.

(4) Larger items shall be placed in a single layer.

(5) Material to be burned shall be spread evenly over the burning trench and smaller items shall not be piled more than 1-foot deep.

e. Prepare and ignite the ignition train.

f. After the burn, and the last indication of smoke or flames, a 60-minute waiting period is required before the burning trench is approached. The supervisor shall perform the inspection of the trench.

g. Metal parts remaining after burning should be salvaged for scrap if quantities warrant. If salvage is conducted, extreme care must be exercised to ascertain that no unburned rounds are present.

h. When tracer mix and other pyrotechnic mixtures are to be burned, the burning shall be accomplished in the same manner as that for bulk high explosives (paragraph 13-4.2.1) except that not more than 50 pounds shall be burned at one time.

13-13.2. ITEMS REQUIRING SPECIFIC PROGRAM MANAGER/ISEA/CFA/NSWC IHD INSTRUCTIONS. Because they are designed, upon ignition, to eject canisters, burning signals, grenades, or similar material, some pyrotechnics cannot be treated by burning. These include items containing photoflash or illuminating compositions, detonation devices, expelling or propelling charges. Specific treatment instructions shall be requested from the program manager.

13-14. TREATMENT AND DISPOSITION OF MISCELLANEOUS EXPLOSIVES AND AMMUNITION ITEMS.

Additional information can be obtained by contacting the Program Manager, ISEA/CFA and NSWC IHD. Treatment instructions for explosive materials used in the Navy for demolition and other purposes are contained in the following paragraphs.

13-14.1. DYNAMITE. Individual blocks may be treated by burning in a single layer not greater in width than the length of one block, on a bed of combustible material. Dynamite awaiting treatment shall be shielded from the sun. Frozen dynamite is more likely to detonate during burning than normal blocks. Treatment of dynamite by detonation may be accomplished where the location will permit this method.

13-14.2. AIRCREW ESCAPE PROPULSION SYSTEMS (AEP), AIRCRAFT STORES RELEASE CARTRIDGES, AND CARTRIDGE ACTUATED DEVICES (CAD).

a. Treatment of Items Found in a Hazardous, Deteriorated, or Damaged Condition. EOD personnel shall be notified as soon as an unsafe condition is discovered. Disassembly in order to render a device safe may be performed only by EOD personnel. At activities that manufacture these items disposition may be accomplished under an SOP. Pending disposition, such devices shall be separated from serviceable materials and clearly identified as damaged/unserviceable. Disposition of disassembled devices shall be requested from NSWC IHD, Indian Head, Maryland (Attn: Code 5320).

b. Disposition of Items that have been Fired. Items shall be examined and dispositioned per OPNAVINST 4790.2 (series) and OPNAVINST 8600.2 (series). Disposition instructions for all other CADs and PADs that are not required for refurbishment, investigation, or other testing and cannot be certified safe, shall be requested from the Naval Supply Systems Command Ammunition Logistic Center (NAVSUP NALC) inventory manager per NAVSUP P-724. Disposition instructions can also be provided by the Navy/Marine Corps CAD/PAD DDA. Whenever it is not possible to inspect for complete expenditure or there is the possibility of duds or misfires, the devices shall be managed as "live" ammunition and dispositioned per NAVSUP P-724 and the Navy Munitions Rule Implementation Policy. Only those aircraft stores release cartridges that can be visually inspected and certified as

having an explosives safety status of safe by EOD personnel, or other qualified personnel working under approved written operating procedures can be released from U.S. Government control. Those devices that can be readily identified and certified as safe, as well as the inspection criteria for identifying them as such, are listed in NAVAIR 11-100-1.1.

13-14.3. INERT-LOADED AMMUNITION. Inert-loaded ammunition shall be completely disassembled. All tracer composition, if present, shall be removed. Inert-loaded ammunition shall be certified safe before release from U.S. Government control.

13-14.4. CARTRIDGE CASES. Cartridge cases shall be deprimed by positive methods and certified safe before release from U.S. Government control. Expended small-arms ammunition cartridge cases, and 25 mm and 30 mm, need not be deprimed. Refer to appendix A for definition of small-arms ammunition.

13-15. MATERIAL POTENTIALLY PRESENTING AN EXPLOSIVE HAZARD.

This section establishes criteria for managing and processing material potentially presenting an explosive hazard (MPPEH). These criteria are intended to protect personnel and property from unintentional exposure to potential explosive hazards associated with material being transferred within or released from Department of Navy (DON) control. Military munitions and military munitions-related materials that are to be used or reused for their intended purpose and are within a DoW component's established management system are not considered to be MPPEH and are exempt from the requirements of this paragraph. For the proper management of cataloged in service military munitions being reused for their intended purpose, refer to NAVSUP P-805 or applicable technical manual. For military munitions that have not yet been cataloged for service use, such as research Development, Test and Evaluation (RDT&E), refer to governing technical and engineering guidance/SOPs. Contact NOSSA for guidance regarding the shipment and storage classification.

13-15.1. BACKGROUND. The potential for MPPEH to present an explosive hazard is the single characteristic that distinguishes it from other DoW material to be reused, excessed, recycled or otherwise disposed. Although other requirements (e.g., trade security, demilitarization, and environmental) may apply to MPPEH and also affect its management, the potential explosive hazards associated with MPPEH make it unique. Typical types of MPPEH include, but are not limited to:

a. Used and unused munitions and munitions debris, targets, and non-training-related materials collected and removed during routine operational range clearance activities or during munitions response actions at other than operational ranges.

b. Used munitions containers and packaging material not included in a DoW component's established management system and being reused for their intended purpose.

c. Munitions-related material generated as a byproduct of munitions manufacturing, maintenance, and demilitarization.

d. Equipment, drainage systems, holding tanks, piping, ventilation ducts, and building materials (e.g., wood and concrete) that were associated with munitions production, demilitarization, or disposal operations.

e. Soil or other environmental media contaminated with high enough concentrations of explosives such that the materials themselves potentially present an explosive hazard.

13-15.2. POLICY. It is DON policy as implemented by this chapter to manage and process MPPEH in support of operational readiness and mission requirements in a way that complies with explosives safety standards.

13-15.2.1. The effective management of MPPEH prevents unauthorized use, transfer, or release of MPPEH from DoW control, transfer or release of MPPEH that will unintentionally present an explosive hazard to either a qualified receiver or the public, and shipment of MPPEH that violates hazardous material transportation regulations.

13-15.2.2. Documentation is key to the safe management of MPPEH. Documentation allows certification, chain of custody, and explosives safety status to be tracked and known at all times.

13-15.2.3. MPPEH shall not be transferred within or released from DON control unless its explosives safety status has been assessed and documented.

13-15.2.4. MPPEH must be assumed to present an explosive hazard and written procedures covering proper MPPEH management, including assessment and documentation requirements, must be developed and maintained for all MPPEH operations.

13-15.2.5. Contracts or other legal agreements require compliance with the provisions of this publication, DoD 4140.62 (series), DoDM 4140.72 (series), DoD 4145.26-M (series), DoD 4160.21-M (series), and DoD 4160.28-M (series) by all who possess, manage, process, or provide disposition of MPPEH.

13-15.2.6. Non-MPPEH Items. Articles, equipment, buildings, or other items that never contained ammunition or were never contaminated with explosives do not pose an explosive hazard and are not considered to be MPPEH. From an explosives safety perspective, it is safe to conduct welding, drilling, or sawing on these materials and to release them to the general public.

13-15.3. GENERAL MPPEH REQUIREMENTS.

13-15.3.1. MPPEH Processing. MPPEH processing includes any action or operation involving MPPEH, including but not limited to: collecting, consolidating, sorting, segregating, separating by metal type, inspecting, storing, decontaminating, transferring, certifying, releasing, demilitarizing (shredding, shearing, chopping, crushing, flattening, cutting, melting), and transporting materials.

13-15.3.2. Processing of MPPEH is considered an operation involving ammunition and explosives handling, until the material is assessed and documented as safe. Storage of MPPEH is considered ammunition and explosives storage, and must comply with established criteria for such storage.

NOTE

Expended small arms cartridge cases not certified as safe are subject to the reduced storage and siting requirements of paragraph 7-5.5.

13-15.3.3. Locations used to process MPPEH must have site approval, based on the maximum potential explosives safety hazards that the material is known or expected to present, in accordance with the requirements of paragraph 8-1.2.1.

13-15.3.4. Locations used for processing MPPEH shall be sited as:

a. An exposed site (ES), at not less than intraline distance (ILD) from surrounding potential explosion sites (PES).

b. A PES, when the MPPEH has not been certified, or has been certified as posing an explosive hazard.

13-15.3.5. Areas where MPPEH is processed or stored must be designated as restricted areas in accordance with paragraph 2-2.2 and posted in accordance with paragraph 7-4.4, until the MPPEH is certified safe.

13-15.3.6. The hazard classification and net explosive weight (NEW) of MPPEH shall be based on characteristics of the type of MPPEH involved, its packaging (if any), and the estimated amount of explosives potentially present.

13-15.3.7. Expended small arms ammunition cartridge cases may be processed as a nonexplosive operation prior to being assessed and determined safe, provided that they are screened before processing. Screening is intended to ensure that only .50-caliber and smaller expended cartridge cases are present, and to remove unused cartridges.

13-15.3.7.1. Screening will be done by locally determined methods included in approved written operating procedures.

13-15.3.7.2. After the expended small arms cartridge cases have been screened, they must be placed in a closed container and kept in a controlled location, but they do not need to comply with paragraphs 13-15.3.2 through 13-15.3.5.

13-15.3.8. Minimize the quantity and time MPPEH is accumulated and retained at any location.

13-15.3.9. When possible, MPPEH shall be covered or stored in closed containers to prevent exposure to or the collection of precipitation.

13-15.3.10. For MPPEH that is derived from munitions debris and range-related debris, activities should give first consideration to the practicability of providing a closed-circuit process managed by a single entity that maintains a chain of custody and accountability from collection through release from DON control before considering other alternatives.

13-15.3.11. Vent or expose any internal cavities of MPPEH, to include training or practice munitions, to:

a. Confirm that an explosive filler is not present.

b. Prevent the buildup of pressure if the material is later heated. Procedures used to achieve venting include use of shaped charges, crushers, drills, saws, etc. Attended, production, and/or sited venting procedures shall be developed with an engineering design, based on a mishap risk assessment (MRA) in accordance with paragraph 7-7.3.

13-15.3.12. MPPEH may be transferred within an installation, (e.g., between the host and tenant commands or within a command) if both parties agree with the transfer, the maximum explosives safety hazards that it is known or suspected to present is documented on transfer paperwork, the transfer

complies with all other explosives safety requirements, including the tagging and marking requirements of paragraph 2-1.14.3 and the material is not moved over public routes.

13-15.4. MATERIAL DOCUMENTED AS SAFE/MATERIAL DOCUMENTED AS AN EXPLOSIVE HAZARD.

13-15.4.1. Material Documented as Safe (MDAS). MDAS is MPPEH that has been assessed and documented as not presenting an explosive hazard and for which the chain of custody has been established and maintained. This material is no longer considered to be MPPEH.

13-15.4.1.1. MDAS may be assessed as safe by:

a. Visual inspection which requires a 100% inspection by one individual, followed by an independent 100% re-inspection by another, or

b. NOSSA- and DWESO-approved technical method followed by a specified post-processing sampling inspection, or

c. Application of expert knowledge on a case-by-case basis as approved by NOSSA.

13-15.4.1.2. MDAS may contain residual explosives; however, these residues shall not be in concentrations or configurations sufficient to pose an explosive hazard.

13-15.4.1.3. Items shall only be classified as MDAS through visual inspection when every surface is visible and capable of being inspected. Visual inspection is only applicable to pieces of metal that have no cavities, holes, blind spaces, rivets, cracks, or other obscured features.

13-15.4.1.4. Probes shall NOT be used to inspect any blind cavities. Probes shall NOT be used to satisfy visual inspection requirements for purposes of documentation as having an explosives safety status of safe.

13-15.4.1.5. Technical methods to process MPPEH for safe certification purposes must be approved by NOSSA and DWESO and include, but are not limited to, thermal processing (that is, furnace, hot fire flashing, hot gas decontamination) and chemical treatments. Quality control/quality assurance methods include thermocouples, explosives-treated coupons, infrared thermometers, swab samples, and colorimetric methods. The post-processing sampling inspection may range from an approved plan for one item, to a robust quality control and quality assurance program, depending on the scope and hazards of the effort.

13-15.4.1.6. MDAS must be segregated in a location with controlled access, preferably a locked facility.

13-15.4.1.7. MDAS may be released for further demilitarization (for example, mutilating, crushing, smelting) only if the integrity of the containers and the chain of custody is maintained, and the explosives safety status documentation accompanies the material during transfer within or release from DON control.

13-15.4.2. Material Documented as an Explosive Hazard (MDEH). MDEH is MPPEH that cannot be documented as MDAS, that has been assessed and documented as to the maximum explosive hazards the material is known or suspected to present, and for which the chain of custody has been established and maintained. This material is no longer considered to be MPPEH.

13-15.4.2.1. MPPEH that can't be documented as MDAS includes material that:

a. Has been examined and no contamination can be visually noted on accessible surfaces, but explosives may be present in concealed housings or other hidden areas such as internal cavities or devices that contain explosives. These items are not safe to be treated with open flame, high temperature heating devices, cutting devices, or hammering devices unless the maximum potential explosives safety hazards that the material is known or expected to present are addressed.

b. Is expected to be free of an explosion hazard, but not enough information is available to certify it as safe. This may be because:

(1) There are potentially internal cavities or devices that contain explosives;

(2) The material has not been 100% inspected, or;

(3) The certification process has not been completed to the point of documentation with dual signatures.

c. Is known or suspected to pose an explosive hazard.

13-15.4.2.2. Visual inspections supporting an assessment that material is MDEH are often augmented by probes, sensors, color reagents, or other aids. These inspections are only effective if the person performing the inspection is properly qualified and certified for the specific type of MPPEH being examined and the aids employed.

13-15.5. DOCUMENTATION OF EXPLOSIVES SAFETY STATUS.

13-15.5.1. MDAS Certification. Certification documentation for MDAS will consist of a Disposal Turn-in Document DD Form 1348-1 (series), or a local form as authorized by the commanding officer.

13-15.5.1.1. The MDAS certification documentation must identify the material type. For example, expended 9mm brass, mixed metal range gleanings, or expended Mk 76 practice bombs.

13-15.5.1.2. Documentation as MDAS requires dual signatures on the certification document that are supplied by individuals that meet the criteria of paragraphs 13-15.7 and 13-15.8. The first signature may be provided by either a DoD employee or DoD contractor. The second signature must be provided by a U.S. citizen who may be either a DoD employee or a DoD contractor and independent of the first inspector.

13-15.5.1.3. Each of the two signatures must be directly above the typed or clearly stamped or legibly printed full name, rank/rate/grade, complete organization name and address, and phone numbers (commercial and DSN) of the respective inspector, as follows:

a. For material being visually inspected, the first signatory (i.e., certifier) must have performed a 100% inspection and the second signatory (i.e., verifier) must have performed an independent 100% re-inspection.

b. For material undergoing NOSSA- and DDESB-approved technical methods, the first signatory must have performed or witnessed the DDESB-approved processing of the material and the second signatory must have conducted an independent quality assurance inspection of processed material using the approved methodology. In addition to the signatory's data outlined above, the technical

method and approval letter must be cited in block 27 "ADDITIONAL DATA" of the DD Form 1348-1 (series), or on the authorized local form.

c. All MDAS documentation shall include the following statement:

> "The material listed on this form has been 100% visually inspected and independently re-inspected, processed by DDESB-approved means, or has undergone the application of expert knowledge, as required by DoD policy, and to the best of my knowledge and belief does not pose an explosive hazard".

13-15.5.1.4. If the required documentation is incomplete or lost or if chain of custody is compromised, this material is no longer considered MDAS and reverts back to MPPEH.

13-15.5.2. MDEH Certification. Certification documentation for MDEH will consist of a Disposal Turn-in Document DD Form 1348-1 (series), a DD Form 2271 (Decontamination Tag), or a local form as authorized by the commanding officer.

13-15.5.2.1. Documentation as hazardous requires a 100% visual inspection. When an initial inspection by a qualified and authorized person determines that the material is hazardous, a second independent inspection is not required, and the certification shall be prepared by the inspector.

The certification document must provide information about:

a. Type of explosive hazard or contamination.

b. Presence of un-vented cavities.

c. Estimated maximum net explosive weight (NEW).

d. MDEH certifications shall include the following statement:

> "The material listed on this form has been inspected as required by DoD policy, and to the best of my knowledge and belief presents an explosive hazard".

The MDEH certification statement may be modified or augmented as required.

13-15.5.2.2. Each signatory must ensure that the chain of custody was maintained before signing the certification documentation.

13-15.5.2.3. If the required documentation is incomplete or lost or if chain of custody is compromised, this material is no longer considered MDEH and reverts back to MPPEH.

13-15.5.3. Retain legible copies of all documents supporting the explosives safety status of the material as MDAS or MDEH (such as the signed DD Form 1348-1, designation letter, and any other documents associated with the inspection and/or re-inspection of the material) for a minimum of three years.

13-15.5.4. Containers of material whose explosives safety status has been documented will have permanent marking and labeling, and container seals which are identified on the supporting documentation or type I/II traceable seals traceable to the individual and unit. The contents must be identified on the outside of the container and traceable seals should follow procedures similar to those

for ordnance container traceable seals required by NAVSUP P-805 for ready-for-issue ammunition. Large items, such as plant equipment, will have permanent weatherproof tags, or painted or engraved markings traceable to the certification document.

13-15.5.5. Documentation of the material's explosives safety must:

a. Have unique identifiers, (such as drum, seal, or document numbers) to link paperwork supporting the material's explosives safety status and,

b. Accompany MDAS and MDEH during transfer within or release from DON control.

13-15.5.6. DLA Disposition Service or contracts may impose additional certification requirements.

13-15.6. CHAIN OF CUSTODY. In order to maintain the chain of custody, do not commingle MPPEH, MDAS and/or MDEH. Should commingling occur such that chain of custody cannot be verified, MDAS and/or MDEH shall lose its documented explosives safety status and become MPPEH.

13-15.6.1. To prevent commingling, use a suitable combination of controls such as separate storage locations within the storage site, moveable signs and ribbon barriers, checklists, standardized container numbering system with unique identifiers, locked gates, locked or sealed and secured containers, waterproof certification documents attached to boxes, weatherproof container markings or labels, container seals traceable to the transfer documentation, type I/II traceable seals traceable to the individual and unit or other locally determined methods.

13-15.6.2. Methods to ensure the veracity of the chain of custody for MDAS and MDEH (and prevent commingling) may include a combination of such controls but must be documented in written operating procedures.

13-15.6.3. Maintain a chain of custody for MDAS using documentation including approved written operating procedures, labels, and transfer documents (for example, Disposal Turn-in Document DD Form 1348-1 (series)).

13-15.7. PERSONNEL DESIGNATED TO ASSESS AND DOCUMENT EXPLOSIVES SAFETY STATUS. Personnel who are qualified and authorized to inspect MPPEH and document its explosives safety status as MDAS or MDEH, will be so designated in writing by direction of their commanding officer (CO) or officer-in-charge (OIC). The designation letter must list the personnel who are qualified and authorized to assess and document the explosives safety status of MPPEH, identify the type of MPPEH that they are authorized to inspect, and include sample signatures. A copy of this designation letter must be provided to any DLA Disposition Service or qualified recycling program (QRP) receiving MDAS and be updated annually (based on the issue date).

NOTE

When the material's explosives safety status is being assessed and documented by a UXO contractor under a contract with Naval Facilities Engineering Systems Command (NAVFAC) or BRAC Program Management Office (PMO), the UXO contractor's project manager must make this designation in writing to the cognizant Facilities Engineering Command (FEC) or BRAC PMO. The cognizant CO or Director must then endorse the designation letter to the appropriate DLA Disposition Service, QRP, or as specified in the associated Explosives Safety Submission and/or contract.

13-15.8. QUALIFICATION AND CERTIFICATION FOR PERSONNEL AUTHORIZED TO PROCESS MPPEH. Processing of MPPEH is considered handling or physically interacting with ammunition and explosives. All DON personnel who are responsible to process, inspect and document MPPEH as either MDAS or MDEH must be qualified in accordance with OPNAVINST 8023.24(series) or MCO 8023.3 (series) ammunition and explosives handlers qualification and certification program for those tasks. See paragraph 2-3.2. All contractor personnel who possess, manage, process, or provide disposition of MPPEH or MDEH must be qualified receivers of MPPEH. See definition of qualified receiver in appendix A.

13-15.8.1. Training to support personnel certification shall be tailored to the specified MPPEH to be processed, inspected, or documented as to the explosives safety status and shall include:

a. Recognition and safe handling of used and unused military munitions of the type to be handled.

b. Demilitarization and trade security controls and procedures for release from DoW control that apply to the type of material to be handled.

c. Management (for example, marking, segregating, securing), processing, and transportation of MPPEH of the type to be handled.

NOTE

The training portion of the qualification requirements can be met by a mixture of formal classroom training, computer based training, and on-the-job training.

13-15.8.2. Appendix C contains additional web-based MPPEH training requirements.

13-15.9. SPECIAL CONSIDERATIONS.

13-15.9.1. Expended shotgun shells should be turned in to the DLA Disposition Service if possible. However, if the DLA Disposition Service will not accept them, expended shotgun shells that do not exhibit hazardous waste characteristics may be disposed of as solid waste (that is, general trash) if they are 100% visually screened for the presence of unfired rounds by two different individuals in accordance with approved written operating procedures.

13-15.9.2. Small arms lead projectiles or shot that have been fired at ranges used solely for small arms ammunition are not considered MPPEH when they are collected for recycling purposes.

13-15.10. EMPTY CONTAINERS AND PACKAGING MATERIALS.

13-15.10.1. All containers that are subject to this paragraph that were previously used for ammunition and explosives are considered MPPEH until certified as MDAS or MDEH and must be managed as such.

13-15.10.2. Prior to release from DON control to DLA or a QRP for disposition, all empty containers, except small arms ammunition containers, must be marked with the word "EMPTY" and previous markings removed or obliterated. See paragraph 11-1.5.2 for marking requirements for empty munitions containers to be shipped to other DON or DoW component activities for storage, reuse or salvage.

13-15.10.3. Empty containers that previously held ammunition and/or explosives may be repurposed to another use supporting operational needs if:

a. The containers are 100% visually screened for the presence of munitions by two different individuals in accordance with approved written operating procedures;

b. All markings associated with the original contents are obliterated, and

c. The containers are stenciled or labeled on two opposing sides reflecting their current use or repainted in a manner that clearly indicates that they have been repurposed and do not contain ammunition and/or explosives.

If all of these conditions are met, documentation of the explosives safety status of the repurposed containers is not required.

13-15.10.4. Approved cardboard, plastic, and plywood containers and packaging materials for HC/D 1.4S materials may be discarded as solid waste (that is, general trash) provided that the following criteria are met:

a. The items are 100% visually screened for the presence of munitions by two different individuals in accordance with approved written operating procedures;

b. All previous markings for other than small arms ammunition are removed or obliterated;

c. The items are broken down or otherwise deformed so that they may not be used for their original purpose; and

d. There are no environmental regulations precluding such disposal.

13-15.10.5. Approved cardboard, plastic, and plywood containers and packaging material may be discarded as solid waste (that is, general trash) provided that the following criteria are met:

a. The items are 100% visually screened for the presence of munitions by two different individuals in accordance with approved written operating procedures;

b. All exterior markings and color codes that indicate munitions or explosives are present must be obliterated;

c. The items are broken down or otherwise deformed so as not to conceal a munition nor be used for their original purpose;

d. Packaging materials must be separated and secured from explosive operations, MDEH, or MPPEH;

e. There are no environmental regulations precluding such disposal.

13-15.11. MOVEMENT AND/OR TRANSPORTATION.

13-15.11.1. Movement. Prior to on-site movement, MPPEH must be evaluated and determined to be safe to move as follows:

a. For munitions response operations, as outlined in paragraph 14-8.1.1.

b. For other than munitions response operations, based on the potential explosive hazard posed by the item and as authorized by the commanding officer, by:

(1) EOD,

(2) UXO qualified personnel, or

(3) Technically qualified and authorized personnel.

13-15.11.2. Transportation. MPPEH will not be transported over public traffic routes. Limited MDAS or MDEH may be shipped over public traffic routes as long as the documentation of its explosives safety status accompanies the shipment. If the shipment contains hazardous materials other than explosives, appropriate hazard classification of the hazardous materials is required and the hazard classification assignments must accompany the shipment.

13-15.11.3. Expended small arms and ammunitions casings (ESAAC) and associated munitions-related material (e.g., containers, links) may be transported over a PTR as a nonexplosive operation under a limited MDAS determination prior to being fully assessed and determined safe, provided that they are screened before transporting. Screening is intended to ensure that only .50-caliber and smaller expended cartridge cases are present, and to remove unused cartridges. The following conditions apply:

a. Screening of ESAACs and associated munitions-related material will be conducted in accordance with approved written procedures.

b. The material is 100% visually inspected for the presence of unfired rounds by two different individuals.

c. Due to the narrow focus of this effort and nature of the potential explosive hazard, these individuals are not required to have designation letters or the MPPEH and Munitions Rule training listed in table C-1.

d. Limited MDAS determination is documented on a DD Form 1348-1A or locally developed screening form prior to transport. Documentation will contain the names of the two individuals performing the screening, the date, and type of material being screened and will be retained until the material returns to a Navy installation and all of the limited MDAS material is properly certified and verified as MDAS.

e. Empty small arms ammunition containers returned to a Navy installation using these screening procedures will also meet empty container requirements of paragraph 13-15.10.

f. Collected unfired rounds will be repackaged into the original container, managed as the appropriate hazard classification, and returned to the supporting Navy ordnance activity (e.g., Navy Munitions Command).

g. Once the material is returned to a Navy installation, it will be properly assessed and documented as safe by personnel who meet the requirements of paragraph 13-15.7 and paragraph 13-15.8 before it is released from Navy control.

NOTE

The process to assess and document the explosives safety status of ESAACs and associated munitions-related material that have already been screened can be considered a non-explosive operation; therefore this process is subject to reduced storage and siting requirements per paragraph 13-15.3.7.

13-15.11.4. MDEH shall not be transported over public traffic routes unless determined safe for transport by qualified and authorized personnel in accordance with table 14-1.

a. For MDEH other than MEC, EOD, UXO Technician III or higher (as defined by TP 18) or personnel who the CO or responsible authority certifies as technically qualified may be authorized, based on the material type, to make such a determination. For example, personnel documenting the explosives safety status of ammunition containers, packaging materials, or expended small arms ammunition cartridge cases shall satisfy minimal qualifications and could be trained to perform the required task through on-the-job training. In contrast, individuals documenting the explosives safety status of range-related debris from range clearance activities require extensive formal training and levels of experience commensurate with UXO Technician III qualifications.

b. These personnel will provide a signed "safe to transport" certification that must accompany the shipment.

13-15.11.5. MDEH that can not be shipped in accordance with an existing hazard classification, must not be transported over public traffic routes until an interim hazard classification (IHC) is obtained from NOSSA. Note that IHCs are not required for MDEH transported as hazard Class/Division 1.1 in military vehicles as outlined in table 14-1. If required, hazard classification assignments must also accompany the shipment.

13-15.12. RELEASE OF MPPEH. No MPPEH shall be sold or transferred, unless it is MDAS or assessed and determined to be MDEH. MDEH may only be transferred or released to a qualified receiver. See definition of qualified receiver in appendix A.

13-15.13. DEMILITARIZATION OF MDAS AND TURN-IN TO DEFENSE LOGISTICS AGENCY DISPOSITION SERVICE. Demilitarization is often a separate requirement from documenting the explosives safety status of the material. MPPEH is often determined to be MDAS before demilitarization. Demilitarization emphasizes removing the capability to reuse munitions for their

original purpose, and meeting trade security requirements. In some cases, a demilitarization requirement (such as venting or burning) may be satisfied before the material can become MDAS.

13-15.13.1. Compliance with DLA demilitarization requirements for purposes of meeting trade security controls and other controls on munitions list items beyond certification of an explosives safety status of safe are not covered here. Contact NOSSA or MARCORSYSCOM PM Ammo for assistance in resolving any conflicts between Navy and DLA requirements.

13-15.13.2. DLA Disposition Service issue specific demilitarization requirements in DOD 4160.21-M (series) and DOD 4160.28-M (series) for all MPPEH.

13-15.13.3. When using DLA to provide disposition of MDAS, documentation must be provided according to DLA guidance as contained in DOD 4160.21-M (series) and DOD 4160.28-M (series). In addition, all MDAS must be assessed and documented as safe per paragraphs 13-15.7 and 13-15.8.

13-15.13.4. Refer to DOD 4160.28-M (series) and related Defense Logistics Agency (DLA) guidance for minimum demilitarization requirements for MPPEH in addition to the requirements for MDAS as described herein.

NOTE

Scrap metal is often collected, stored for some time, then sold and resold. Once MDAS enters the recycling stream, the mere appearance of being a live munition may result in confusion and callbacks to military EOD personnel to remove a perceived explosion hazard. Therefore, demilitarization should, to the greatest extent possible, process MDAS until a reasonable person will not mistake it for a munitions item. Strive to remove the "military lookalike" appearance.

13-15.14. RECYCLING MDAS IN THE QUALIFIED RECYCLING PROGRAM. A written, explosives Mishap Risk Assessment (MRA) (see paragraph 7-7.3) or Operational Risk Management (ORM) assessment in accordance with OPNAVINST 3500.39 (series) will be performed before any QRP may receive MDAS. The results of the MRA or ORM assessment will be used to develop approved written procedures for processing MDAS prior to transfer to the QRP. Formal, exhaustive, quantitative risk assessments are normally not required for routine processing of material that is eligible for the QRP.

13-15.14.1. The MRA or ORM assessment will identify:

a. The nomenclature and description of the MDAS.

b. The potential explosive hazard associated with the MDAS. The MRA or ORM assessment will evaluate the adequacy of the QRP training, oversight, record keeping, processing methods, equipment, and storage facilities. The MRA or ORM will be reviewed by the cognizant Explosives Safety Office (ESO) for approval at the command level.

13-15.14.2. Only the following material is eligible for the QRP:

a. Expended small arms ammunition cartridge cases which includes .50 caliber (12.7mm) and below;

b. Mixed metals gleaned from range clearance as follows:

(1) Empty metal small arms ammunition (.50 caliber and below) containers that have been damaged and are not acceptable for reuse;

(2) Metal packaging and crating material, such as banding and pallet skids;

(3) Munitions debris consisting of unrecognizable fragments of metal.

(4) Metal debris from non-Munitions List Item (MLI) or Commerce Control List Item (CCLI) targets consisting of unrecognizable pieces and fragments of metal. Any debris resulting from a target that was designed to resemble a munitions item must be deformed or otherwise destroyed so that it cannot be misidentified as a munitions item. Such material is considered most likely to be free of explosive contamination, by its nature, and thus most suitable for turn-in to the QRP following MDAS certification.

13-15.14.3. Anything requiring demilitarization (see definition in appendix A) or that is an MLI or a CCLI, is not QRP eligible, with the exceptions noted above. In addition, prior to public sale via a QRP:

a. Expended small arms cartridge cases must be crushed, shredded, deformed, or otherwise destroyed prior to public sale, and

b. Debris from targets must be flattened or otherwise altered so that it cannot possibly contain a munitions item.

13-15.14.4. Only MDAS is acceptable for transfer to the QRP for direct sale, or to DLA Disposition Services for sale to reimburse the QRP.

13-15.14.5. QRP personnel who may receive expended small arms ammunition cartridge cases or mixed metals gleaned from range clearance must be trained at a minimum to do the following.

a. Recognize QRP eligible material.

b. Verify signatures on all turn-in documents, such as Disposal Turn-in Document DD Form 1348-1 (series), against the current list of personnel authorized to certify as safe.

c. Visually inspect certified QRP eligible material, and recognize potential explosives safety hazards.

d. Respond properly if an unsafe condition is identified.

13-15.14.6. The QRP must develop written operating procedures for MDAS management that ensure chain of custody and MDAS documentation requirements are met. These written procedures are particularly important if the following occur to the MDAS at the QRP prior to release from DON control:

a. Crushed, shredded, deformed, or otherwise destroyed, or

b. Re-containerized or otherwise consolidated.

13-15.14.7. Include the following Dangerous Property Statement on turn-in documentation in addition to the safe certification:

Purchasers are cautioned that articles or substances of a dangerous nature may remain in the property regardless of the care exercised to remove same. The U.S. Government assumes no liability for damages to property of the Purchaser or for personal injury, disability or death of the Purchaser, its employees, or to any other person arising from or affiliated with the purchase, use or dispositions of this material. The purchaser shall hold the U.S. Government harmless from any and all such demands, suits, actions, or claims arising from or otherwise relating to the purchase of this material.

13-15.15. OPERATION OF DEMILITARIZATION PROCESSING EQUIPMENT (DEFORMERS/ SHREDDERS/GRANULATORS) ON NAVY ACTIVITIES. Demilitarization Processing Equipment (Deformers/shredders/granulators). Physical energy is used to deform (crush, bend, shred, granulate) expended cartridge cases of .50 caliber or smaller, rendering all cartridges unusable.

NOTE

Deformers/shredders are not considered to be a RCRA treatment process; therefore a RCRA permit is not required. Destruction in demilitarization processing equipment meets U.S. Trade Security Controls to render useless beyond the possibility of restoration for use as a cartridge or shell casing, and makes the material eligible for direct sales to reimburse activity Qualified Recycling Programs.

13-15.15.1. All demilitarization process equipment (deformers/shredders/granulators) operated on Navy activities must be pre-approved by NOSSA. The list of NOSSA approved demilitarization process equipment is available on the MPPEH page of the NOSSA website. Modification to approved equipment, specifications, or drawings may degrade the equipment's ability to contain hazards and must be approved by NOSSA prior to implementation. Requests to add equipment to the approved list or modify approved equipment, to include manufacturer's revision of previously approved versions of equipment, must contain:

a. Manufacturer's equipment specifications and drawings or specifications and drawings of the requested modifications.

b. Test data showing the equipment is capable of containing overpressure, fragments, and thermal hazards associated with a worse-case reaction involving a single round of the most energetic cartridge processed.

c. Any modification to the approved equipment must include a statement with a complete description of the modifications requested, the reasons for such modifications, and any explosives safety impact resulting from the modifications.

13-15.15.2. For approved demilitarization processing equipment (deformers/shredders/granulators) to be located inside the IBD of any PES, a site approval request must be submitted in accordance with paragraph 8-1 and contain the following additional information:

a. The identification of the approved equipment to be sited.

b. A list of operating procedures that demonstrate: cartridge casings are screened prior to processing; processing equipment is operated within the manufacturer's specifications and restricted to expended .50-caliber and smaller cartridge casings; and that equipment is inspected and maintained to ensure safe operation.

c. Disposition of processed material.

NOTE

These requirements do not apply to demilitarization equipment that is integral to a PES operation.

13-15.15.3. For approved demilitarization processing equipment (deformers/shredders/granulators) to be located outside the IBD of all PESs, approval may be granted through local procedures established by the activity ESO. Local approval must document in writing the following information:

a. The identification of the approved equipment to be sited.

b. A list of operating procedures that demonstrate: cartridge casings are screened prior to processing; processing equipment (deformer/shredder/granulators) is operated within the manufacturer's specifications and restricted to expended .50-caliber and smaller cartridge casings; and that equipment is inspected and maintained to ensure safe operation.

c. Disposition of processed material.

13-15.16. OPERATION OF DEMILITARIZATION PROCESSING EQUIPMENT ON MARINE CORPS INSTALLATIONS. The decision to implement an installation recovery/recycle/ demilitarization program for expended small arms cartridge casings is at the sole discretion of the installation commander. If implemented, the program must comply with the guidance provided in MCO 5100.29 Volume 8 (series). Further clarification can be obtained from MARCORSYSCOM (PM AMMO)ESS Branch.

13-15.17. OPERATION OF CONTRACTOR DEMILITARIZATION PROCESSING EQUIPMENT (DEFORMERS/SHREDDERS/GRANULATORS). All demilitarization process equipment (deformers/shredders/granulators) owned and operated by a contractor on Navy activities or at a contractor's facility for the processing of expended cartridge cases of .50 caliber or smaller must meet the requirements of 13-15.15.3. Naval activities must ensure that procedures exist for the appropriate management of live rounds discovered during the demilitarization process.

13-15.18. REPORTING MPPEH INCIDENTS. Explosive incidents involving MPPEH or MDEH, or unauthorized transfer or release of uncertified MPPEH or MDEH, or transfer or release of MPPEH that presented an unintentional hazard to a qualified receiver, shall be immediately reported. For Naval incidents, notify NOSSA at DSN 354-6003 or fax DSN 354-6749. NOSSA is responsible for reporting to higher authorities as required. For Marine Corps incidents, notify MARCORSYSCOM (PM AMMO) EES Branch. Contractors will report such incidents in accordance with DOD 4145.26-M (series) requirements for Mishap Investigation and Reporting. This requirement is in addition to the applicable requirements of paragraph 1-5.3 for reporting explosive mishaps and incidents.

13-16. AMMUNITION AND EXPLOSIVES (AE)-FREE CERTIFICATION FOR NON-MUNITIONS ITEMS.

Certification of non-munitions items as free of ammunition and explosives (AE) is required to protect personnel and property from unintentional exposure to live munitions, munition debris, or munition components. Examples of non-munitions items that may require AE-free certification prior to transfer to Defense Logistics Agency (DLA) Disposition Services (DS) include but are not limited to: small arms and light weapons, barrel assembly and upper receiver, ammunition magazines and clips, equipment which held ammunition or explosives, and vehicles used in training with munitions or operated on a training range where munitions may be used.

NOTE

AE-free certification applies only to non-munitions items that are being transferred to DLA DS for reuse or disposal. MPPEH which has been documented as safe or as an explosive hazard do not require an AE-free certificate. For certification of MPPEH as safe or as an explosive hazard, refer to paragraph 13-15.4.

13-16.1. GENERAL REQUIREMENTS. AE-free certification of non-munitions items may be performed as a non-explosive operation. Storage of non-munitions items prior to certification do not meet the requirements for ammunition and explosives storage, and do not have to comply with established siting criteria.

13-16.2. AE-FREE CERTIFICATION. AE-free certification is a determination through examination that there are no live munitions present in non-munitions items being transferred to DLA DS. The examination will be a visual inspection to ensure no live munitions are present.

13-16.2.1. Visual inspection requires a 100% inspection by one individual, followed by an independent 100% re-inspection by another.

13-16.3. DOCUMENTATION OF AE-FREE.

13-16.3.1. AE-free certification documentation will consist of a Disposal Turn-in Document DD Form 1348-1 (series), or equivalent, and a DLA inert certificate. An example of a DLA inert certificate is provided in DOD-M 4160.28 Figure 39.

NOTE

While the form required by DLA is an inert certificate, the requirements for inert munitions storage and siting do not apply.

13-16.3.2. Documentation as AE-free requires dual signatures on both the DLA inert certificate and the DD Form 1348-1, or equivalent. Personnel certifying non-munitions items as AE-free must meet the criteria of paragraphs 13-16.4 and 13-16.5.

13-16.3.2.1. Each of the two signatures must be directly above or beside the typed or clearly stamped or legibly printed full name, rank/rate/grade, complete organization name and address, and phone numbers (commercial and DSN) of the respective inspector, as follows:

a. The first signatory (i.e., certifier) must have performed a 100% visual inspection of the non-munitions items and the second signatory (i.e., verifier) must have performed an independent 100% visual re-inspection.

b. Retain legible copies of all documents supporting the non-munitions item as AE Free (signed DD Form 1348-1 or equivalent and DLA Inert Certificate) until the items are transferred to DLA DS.

13-16.4. PERSONNEL DESIGNATED TO ASSESS AND DOCUMENT NON-MUNITIONS ITEMS AS AE-FREE. Personnel who are authorized to inspect non-munitions items as AE-free, will be so designated in writing by direction of their commanding officer (CO) or officer-in-charge (OIC). The designation letter must list the personnel who are qualified and authorized to assess and document non-munitions items as AE-free, and include sample signatures. A copy of this designation letter must be provided to any DLA Disposition Service and be updated as personnel rotate.

NOTE

The designation letter used for AE-free shall not be combined with the designation letter for personnel who are qualified and authorized to assess and document the explosives safety status of MPPEH.

13-16.5. QUALIFICATION FOR PERSONNEL AUTHORIZED TO DETERMINE NON-MUNITIONS AS AE-FREE. Inspecting non-munitions items for AE is not considered handling or physically interacting with AE. There is no formal training required to qualify these personnel.

THIS PAGE INTENTIONALLY BLANK

CHAPTER 14
RESPONSE ACTIONS INVOLVING KNOWN OR SUSPECTED EXPLOSIVE HAZARDS

14-1. INTRODUCTION.

This chapter establishes criteria to protect people and real property from explosive hazards associated with real property known or suspected to contain munitions or explosives of concern (MEC) or Material Potentially Presenting an Explosive Hazard (MPPEH) and munitions responses to MEC and/or MPPEH. Munitions responses are the response actions taken by the Department of the Navy (DON) under the Department of Environmental Restoration Program (DERP) or other venue to address DON defense sites that are known or suspected to contain MEC and/or MPPEH. Although the DERP addresses other hazards posed by munitions, this chapter focuses on the explosives safety aspects of the munitions response. The chapter also establishes a process to ensure that the oversight and management of explosives safety and ordnance environmental requirements and concerns are integrated and addressed throughout DON responses to MEC and/or MPPEH. Additional munitions response guidance is provided in NOSSAINST 8020.15 (series) and MCO 5100.29 Volume 8 (series).

14-1.1. When military munitions burial sites on operational ranges are addressed, follow the guidance provided in NOSSAINST 8020.15 (series) and MCO 5100.29 Volume 8 (series).

14-1.2. This chapter does not address munitions responses or military munitions involving chemical agents. Contact Naval Ordnance Safety and Security Activity (NOSSA) or Marine Corps Systems Command (MARCORSYSCOM) Program Manager for Ammunition (PM Ammo), as appropriate, for specific guidance regarding these items and associated munitions responses.

14-2. GENERAL.

14-2.1. MEC/MPPEH. A munitions response is required at DON real property known or suspected to contain MEC and/or MPPEH prior to its transfer from Department of War (DoW) control or conversion to a new DON use that is incompatible with the presence of MEC and/or MPPEH. A munitions response is also required at former DON sites that are no longer under the control of the DoW and are known or suspected to contain MEC and/or MPPEH, but have been determined not to be eligible for the Army's Formerly Used Defense Sites (FUDS) program. Real property is:

a. **Known** to contain MEC and/or MPPEH when MEC and/or MPPEH has actually been found on the property and there is reason to believe that additional MEC and/or MPPEH is present beyond that found.

b. **Suspected** to contain MEC and/or MPPEH when MEC and/or MPPEH has not been found, but other evidence indicates with a high degree of certainty that MEC and/or MPPEH exists on the property. An example is an area that contains craters or creditable historical evidence of military munitions use.

14-2.2. REAL PROPERTY. Real property consists of land, buildings, and installed equipment. Real property may contain MEC and/or MPPEH as the result of research, development, testing, evaluation, manufacturing, storing, handling, training, treatment, disposal (including burial), loss, abandonment, or waste collection. Examples of such property include ranges, pads, pits, basins, lake, river or stream

beds, impact areas, maneuver areas, training areas, military munitions burial sites, and buildings (including their installed equipment) used for munitions-related activities.

14-2.3. RESIDUAL RISK. Due to current technology limitations and site conditions, it is not possible to remove all MEC and/or MPPEH from a given site with 100% certainty. Therefore, all munitions response sites will pose some degree of residual risk after the response is complete.

14-2.4. MPPEH. During munitions responses, MPPEH is frequently encountered on-site. Although MPPEH is not known with certainty to present an explosion hazard, MPPEH must be managed as presenting an explosive hazard in accordance with paragraph 13-15 until it is visually inspected and/or processed and documented as safe. Examples of MPPEH include, but are not limited to, munitions or range debris, and empty casings or other expended munitions.

14-2.5. DISPOSAL. The disposal (such as burying, dumping) of military munitions on land or in water, except when specifically authorized by the Secretary of the Navy or designee and in compliance with applicable regulatory requirements, is prohibited. However, this prohibition does not preclude:

a. The covering of munitions with earth to control fragments and noise during authorized destruction by detonation; or

b. The use of in-situ capping of MEC and/or MPPEH when implemented as an engineered remedy under an authorized response action.

14-3. APPLICABILITY.

14-3.1. APPLICABLE. This chapter applies to munitions responses, including related research and development efforts, conducted by or for the DON on any of the following real property:

a. Former DON sites that are no longer under the control of the DoW, but have been determined not to be eligible for the Army's FUDS program.

b. Former ammunition and explosives operating buildings and any associated discharge areas.

c. Areas where combat operations or acts of war occurred.

d. Areas on operational ranges where military munitions burial sites are located.

e. Any other DON property not on an operational range.

14-3.2. NOT APPLICABLE. This chapter does not apply to:

a. Maintenance or clearance of operational ranges.

b. Operation, maintenance, or cleanup of ammunition and explosives operating buildings in an active, standby, or layaway status.

c. Explosives or munitions emergency responses.

14-4. REAL PROPERTY KNOWN OR SUSPECTED TO CONTAIN MEC AND/OR MPPEH.

14-4.1. RECORDKEEPING. DON installations and property holders will identify all ammunition and explosives storage and operating locations and all areas known or suspected to contain MEC and/or MPPEH on installation master plans and maps in accordance with paragraph 2-1.14.4.

14-4.1.1. Permanent records that must be maintained include:

a. Former munitions-related activities at the site including, but not limited to, Explosive Ordnance Disposal (EOD) incident reports, range firing records and manuals, Open Burn/Open Detonation (OB/OD) treatment records, and other records involving ammunition and explosives.

b. Site characterization activities such as record searches, geophysical investigations, and intrusive investigations.

c. Munitions responses, including:

(1) Site investigations.

(2) No DoD Action Indicated (NDAI) or No Further Action (NOFA) determinations.

(3) Construction support.

14-4.1.2. If a shore activity is slated to become inactive or closed, the records required by paragraph 2-1.14.4 must be maintained and transferred to appropriate records repositories. If necessary, contact NOSSA/MARCORSYSCOM (PM AMMO) for guidance regarding the disposition of these records.

14-4.2. ACCESS TO REAL PROPERTY.

14-4.2.1. Limit access to real property containing MEC and/or MPPEH by:

a. Taking risk-based actions to prohibit and prevent unauthorized access to DON real property containing MEC and/or MPPEH. These actions can include posting warning signs, establishing access controls (such as fences, entry/exit points, or roving security patrols), and public education.

b. Allowing personnel to enter DON property known to contain MEC and/or MPPEH only after full consideration of the type, amount, and location of MEC and/or MPPEH present (including depth) and the activities for which entry will be authorized. As necessary, provide hazard control briefings prior to entry and provide escorts who are trained in identifying and handling MEC and/or MPPEH.

c. Managing explosives hazards posed by explosives residues in former ammunition and explosives operating buildings.

14-5. MUNITION RESPONSES.

14-5.1. GENERAL. Any DON organization responsible for a munitions response, such as a Base Realignment and Closure (BRAC) Program Management Office (PMO) or Facilities Engineering Command (FEC), shall:

a. Ensure close coordination between appropriate explosives safety and environmental organizations on matters related to munitions responses to MEC and/or MPPEH. Specifically, local and

regional Explosives Safety Officers (ESO) shall be included in munitions responses decision making for sites located within their area of responsibility.

b. Take necessary actions to protect DON personnel, installation-related personnel, and the public from exposure to explosive hazards associated with munitions responses and/or real property known or suspected to contain MEC and/or MPPEH.

c. Design and execute munitions responses, when MEC and/or MPPEH has been determined to present an unacceptable risk. The design of these responses shall be based on the current, determined, or reasonably anticipated future land use.

d. Use the most appropriate technologies available to detect anomalies that can indicate the presence of MEC and/or MPPEH with the objective of removing MEC and/or MPPEH to the degree consistent with the current, determined, or reasonably anticipated future land use.

e. Periodically, such as during 5-year Comprehensive Environmental Response, Compensation, and Liability Act (CERCLA) reviews, assess completed response actions to ensure the response remains effective. These reviews are particularly important in areas where natural phenomena (such as frost heave, soil erosion, droughts, tidal action) could expose MEC and/or MPPEH or where a land use control (LUC) constitutes a major element of the response. The reviews shall consider the explosives safety aspects of munitions responses.

f. Perform an appropriate munitions response prior to changing the use of DON owned or controlled property to one that is incompatible with explosive hazards known or suspected to be present.

g. Ensure that personnel trained and qualified in accordance with the Department of War Explosives Safety Office (DWESO) Technical Paper 18, conduct munitions responses to MEC and/or MPPEH. Unless otherwise authorized by NOSSA in an ESS, only UXO Technicians IIIs and higher may assess and document the explosives safety status of MPPEH during Navy munitions responses.

h. Obtain NOSSA/MARCORSYSCOM (PM Ammo) and DWESO approval of Explosives Safety Submissions (ESS), prior to the start of any activity involving intentional contact with MEC and/or MPPEH or intrusive operations in areas known or suspected to contain MEC and/or MPPEH.

i. Prepare and submit After Action Reports (AAR) to NOSSA/MARCORSYSCOM (PM Ammo) within six months of the completion of the specific munitions response actions authorized by an ESS. These reports, which indicate that an approved munitions response has been completed, are used to close out files maintained by the NOSSA/MARCORSYSCOM (PM Ammo) and the DWESO.

14-6. RESIDUAL EXPLOSIVES HAZARD.

Areas that the military has used for munitions-related activities (such as live-fire training or testing impact areas) may not be appropriate, even after the completion of a munitions response, for certain uses such as residential development. These areas may, after a munitions response, be better suited for uses such as wildlife refuges or surface recreational areas, that restrict or limit intrusive activities. Where the use of such areas for residential development or similar purposes is determined necessary, a munitions response must be conducted in accordance with a DWESO approved ESS.

14-6.1. Some MEC and/or MPPEH might not be detected or removed during a response. Although residual risks can be managed (by use of an agreed-upon LUC such as explosives safety education; recurring reviews; and/or construction support), residual hazards may still exist.

14-6.2. From an explosives safety perspective, the extent to which MEC and/or MPPEH removal is undertaken depends largely on the current, determined or reasonably anticipated future land use. When MEC and/or MPPEH cannot be removed to the degree necessary to safely allow the current, determined or anticipated future land use, the land use must be changed or restricted accordingly.

14-6.3. When the DON does not control the land and the imposition of a LUC is not possible (such as transferred, non-FUDS sites), the property owner and, if known, any tenants shall be provided written notification of the potential residual explosive hazards and the risks inherent in any use of property that is inconsistent with those hazards.

14-7. EXCLUSION ZONES (EZ).

Munitions responses often involve the storage, handling, processing, and/or excavation of MEC and/or MPPEH. These operations can pose explosive hazards and are subject to the siting criteria contained in chapter 8. All munitions response-related operations and storage locations must be shown on Explosives Safety Quantity-Distance (ESQD) maps. The safety zone, or ESQD, established around a processing, handling, or intrusive MEC and/or MPPEH work area is called an exclusion zone (EZ). Unlike a standard site approval that is associated with a fixed process or structure and remains in force, a MEC EZ is created by a response operation that may move within defined boundaries, can be suspended, and will be cancelled upon project completion. For example, the EZ that results from an excavation process moves with the excavation equipment as it operates on the site. If excavation operations are not occurring and MEC and/or MPPEH is not known or suspected to be present, the excavation EZ is not in effect. This EZ must be cancelled via an AAR when the project is completed.

14-7.1. STORAGE. The storage of donor explosives, recovered MEC, and MPPEH must comply with the applicable unintentional detonation siting requirements based on the net explosive weight (NEW) and Hazard Class/Division (HC/D) of the items being stored. Until it is documented as safe in accordance with paragraph 13-15.5, MPPEH is subject to siting requirements.

14-7.2. HANDLING. The handling of MEC and/or MPPEH produces an EZ based on the munition with the greatest fragmentation distance (MGFD) or MCE, as appropriate.

14-7.3. PROCESSING. The applicable EZs for MEC and/or MPPEH processing are based on whether the operation being performed is considered mechanized or not. (see paragraph 14-11.9.3.b).

14-7.4. EXCAVATION. Due to the unique nature of excavation operations, the application of EZs to these operations differs from other operations. Excavation operations generally fall into two categories: manual or mechanical. Mechanical excavation is not necessarily considered a mechanized MEC process as defined in paragraph 14-11.9.3.b.

14-7.5. ACCESS. In general, access to EZs is limited to personnel essential to the operation being conducted. However, under specific conditions and on a case-by-case basis, authorized visitors may be granted access to the EZ when operations are being conducted. In addition to general munitions response site access requirements, formal written procedures addressing EZ access, including

authorized visitor access, must be developed in support of response actions involving MEC and/or MPPEH and must address the following requirements:

a. Access to an EZ while munitions response operations are occurring is limited to essential personnel and authorized visitors.

b. The Unexploded Ordnance Safety Officer (UXOSO) is responsible for conducting an operational risk management assessment in accordance with OPNAVINST 3500.39 (series) prior to initiating response actions involving MEC and/or MPPEH. In addition, the UXOSO must determine the maximum number of persons (essential personnel and authorized visitors) that can be in the EZ at one time. The ratio of UXO-qualified escorts to visitors will be determined by the UXOSO based on this site-specific operational risk analysis.

c. Based on the risk posed by the munitions response operation underway, the UXOSO may determine that access to the EZ is unsafe for visitors. However, every effort should be made to accommodate the authorized visitor's needs.

d. With concurrence of the responsible project manager, the UXOSO will grant EZ access to authorized visitors. Access to the site will be based upon the operational risk analysis of the scheduled MEC and/or MPPEH operations and availability of escorts, as well as a demonstrated visitor need and subsequent completion of visitor hazard control briefings.

e. Persons requiring access to the EZ must demonstrate a legitimate need for access and obtain authorization from the responsible project manager and UXOSO. At a minimum, the request for authorization will include: names of the individual requesting access, the identification of emergency contacts for these individuals, purpose of visit; task(s) to be performed; and rationale to support EZ access. Persons requesting access must submit their request to the responsible project manager and UXOSO prior to the proposed date of the site visit. This advance notice will allow time for the UXOSO to support the visit request by assigning a qualified escort, conducting an operational risk analysis on the operations planned for the date of the site visit, and preparing a visitor site-specific hazard control briefings for the planned operations.

f. Prior to entry, all authorized visitors must receive a site-specific hazard control briefing describing the specific hazards and safety procedures to be followed within the EZ for operations underway that work day. Each authorized visitor must acknowledge receipt of this briefing in writing.

g. Authorized visitors to the EZ must be escorted at all times by a UXO-qualified person assigned to the project.

h. Any authorized visitor that violates the established safety procedures will be immediately escorted out of the EZ and/or site for their own protection and to protect essential personnel working at the site.

14-7.5.2. PM Ammo must be notified when access to an EZ is granted.

14-7.5.3. Other requirements, such as Occupational Safety and Health Administration (OSHA), may also apply.

14-7.6. CANCELLATION. The AAR for each munitions response must include a request to cancel any EZs or other site approvals established in support of the munitions response.

14-8. TRANSPORTATION.

Although the DON considers destruction-in-place the safest approach to MEC that is encountered, the munitions response must be based on the MEC and/or MPPEH known or suspected to be present and site-specific conditions. At a given site, MEC may or may not have experienced deterioration and identification by markings, nomenclature, or other characteristics may or may not be possible. As a result of these and other factors, a response action may include on-site movement or off-site transportation of recovered MEC or MPPEH.

14-8.1. MEC AND/OR MPPEH MOVEMENT/TRANSPORTATION.

14-8.1.1. Prior to on-site movement, MEC and/or MPPEH must be evaluated and determined to be safe to move as follows:

a. For MEC, including suspect munitions items, by:

(1) EOD or

(2) Qualified and authorized UXO contractor personnel serving as the Senior Unexploded Ordnance Supervisor (SUXOS) and UXOSO in accordance with TP-18. They must determine that the risk associated with movement is acceptable and that the movement is necessary for the efficiency of the activities being conducted or the protection of people, property or critical assets. In such cases, the responsible SUXOS and UXOSO must agree with the risk determination and document this decision prior to movement of the MEC or munitions item.

b. For all other MPPEH:

(1) EOD,

(2) UXO qualified personnel, or

(3) Technically qualified and authorized personnel.

14-8.1.2. The non-emergency transportation of recovered MEC or other Material Documented as an Explosive Hazard (MDEH) over public traffic routes must comply with applicable guidelines outlined in chapter 12, chapter 13, paragraph 13-15 and Resource Conservation and Recovery Act (RCRA) hazardous waste requirements, as well as the following:

a. The transportation of MPPEH off-site is not authorized.

b. As specified in table 14-1, EOD, UXO contractor personnel or designated technically qualified personnel must evaluate recovered MEC and/or MPPEH items, assess and document their explosive status, and determine if they are safe to transport. If the item is assessed and determined to pose an explosive hazard, it must be considered MDEH and managed accordingly. Note that MEC that has been assessed and determined to present an explosive hazard is MDEH only as long as chain of custody is maintained. If the chain of custody is lost, the material becomes MPPEH and its explosives safety status must be re-assessed and documented. Prior to transport, EOD specified UXO contractor

personnel, or designated technically qualified personnel, as appropriate, must certify in writing that the item is safe for transport.

c. Recovered MEC items shall be transported and stored as HC/D 1.1 with appropriate Compatibility Group assigned by EOD or UXOSO for the project and will be stored separately from serviceable ammunition. (Note that the original hazard classification no longer applies.) If a reduced classification is warranted, contact NOSSA for additional hazard classification guidance.

d. UXO contractor personnel who, by contract requirement, are tasked with the responsibility of transporting or preparing shipments of MEC or other MDEH for transport over public roads must meet all training requirements of 49 CFR Part 172 and applicable state requirements. Since loading and unloading operations involve the handling of ammunition, explosives and related hazardous material, the general handling regulations described in chapter 10 shall be observed.

e. The packaging of MEC or other MDEH for transportation must meet DOT requirements. For example, MEC or other MDEH packaging designs must provide a container with appropriate blocking and bracing to prevent migration of the hazardous filler. Padding must also be added to protect the MEC or other MDEH item from heat, shock, and friction. Contact the Navy PHST Center, Naval Surface Warfare Center Indian Head Explosive Ordnance Disposal Technology Division (NSWC IHD), Detachment Picatinny, Picatinny Arsenal, NJ for additional packaging guidance.

f. A manifest must be prepared in accordance with 49 CFR 172.205 and 40 CFR 262.20 when transporting MEC or other MDEH over public traffic routes in non-emergency situations, as appropriate.

g. DON personnel who are tasked to sign shipping papers must be trained and be given signature authority by their command in accordance with the requirements of DTR 4500.9-R (series).

h. Where possible, transport such items by military vehicle using military personnel.

Table 14-1. Hazard Classification Guidance Table for MDEH Safe-To-Transport Certification

Recovered Item	Certifier	HC/D	Vehicle Type	IHC Required
UXO	EOD only	1.1	Military	No
UXO	EOD only	1.1	Commercial	Yes
UXO	EOD only	Other than 1.1	Commercial	Yes
DMM/MC	EOD or UXO Technician III (or higher)*	1.1	Military	No
DMM/MC	EOD or UXO Technician III (or higher)*	1.1	Commercial	Yes
DMM/MC	EOD or UXO Technician III (or higher)*	Other than 1.1	Military	Yes
DMM/MC	EOD or UXO Technician III (or higher)*	Other than 1.1	Commercial	Yes
Other MDEH	EOD, UXO Technician III (or higher), or other designated technically qualified personnel**	1.1	Military	No
Other MDEH	EOD, UXO Technician III (or higher), or other designated technically qualified personnel**	1.1	Commercial	Yes
Other MDEH	EOD, UXO Technician III (or higher), or other designated technically qualified personnel**	Other than 1.1	Military	Yes
Other MDEH	EOD, UXO Technician III (or higher), or other designated technically qualified personnel**	Other than 1.1	Commercial	Yes

* UXO Technician standards are defined in DWESO TP 18.

** See paragraph 13-15.11.3.

14-9. SELECTION AND DESIGN OF RESPONSES.

Explosives safety must be addressed in the selection and design of munitions response actions. The protection provided by a response must be consistent with the current, determined or reasonably anticipated future land use. The selection of the response is driven by factors such as land use; geologic features and flora; MEC and/or MPPEH known or suspected to be present; and cleanup technologies available. The design of a response must consider the site-specific information below.

14-9.1. HISTORICAL INFORMATION. Historical information, which is documented in a written report, is gathered through a records search, to include the permanent records outlined in paragraph 2-1.14.4, and interviews. The following information is required:

a. Boundaries of the response area. For munitions responses, the Munitions Response Area (MRA) boundaries and, when appropriate, the boundaries of any Munitions Response Sites (MRS) within the MRA such as firing points, impact areas, and/or munitions burial sites are required.

b. Type(s) of MEC and/or MPPEH known or suspected to be present based on the munitions-related operations, training, or testing previously performed in the MRA or MRS.

14-9.2. LAND USE. Land use is the current, determined or reasonably anticipated future use of real property. Because portions of the response area (such as the MRA or MRS) might be used differently (such as public highway, wildlife refuge, sports field, industrial complex), different responses actions (such as surface removal, subsurface removal, no removal, remedial response) may be appropriate within any given response area.

14-9.2.1. Where the land use is, or will be, limited to surface activities, the munitions response may only involve removing MEC and/or MPPEH on the ground surface (that is, surface removal). This removal may include the use of geophysical instruments.

14-9.2.2. When the land use will involve or allow intrusive activities to occur, the response will normally require a subsurface removal, and may require follow-on construction support. Where the current, determined or reasonably anticipated land use is compatible with the explosive hazards present or suspected, a removal action may not be necessary.

14-9.2.3. Where a response would adversely impact natural or cultural resources, a removal action may not be practical.

14-9.3. RESULTS OF ON-SITE INVESTIGATIONS. The results of any on-site investigations should be used to validate and augment information discovered during the historical review and to determine the specific boundaries of the response area (such as the boundary of an MRA or of any MRS within an MRA).

14-9.4. ANALYSIS. A detailed analysis of available records, technical data, and the results of on-site investigations shall evaluate, at a minimum:

a. The types of MEC and/or MPPEH, known or suspected to be present, including technical characteristics (such as, filler, fuzing) and estimated distribution.

b. The potential explosive hazards present.

c. Physical site characteristics (such as flora, fauna, geological, topographical, hydrological).

d. Persons potentially endangered.

e. Information from previous or current responses.

14-9.5. LAND USE CONTROL (LUC). The appropriateness and effectiveness of an LUC to manage any residual explosives safety risks shall be evaluated.

14-9.6. TECHNOLOGY. The applicability, capabilities, and limitations of available technologies (such as detection, discrimination, removal) shall be evaluated.

14-10. SPECIAL CONSIDERATION.

14-10.1. EXPLOSIVE SOIL. Because of past munitions-related activities, such as the use of settling ponds or explosives sumps at munitions production or demilitarization facilities, concentrations of explosives in soil (such as sand, sludge, clay) can exist in high enough concentrations that the mixture itself presents an explosive hazard. Such mixtures are referred to as "explosive soil."

14-10.1.1. The NEW of explosive soil is the weight of the mixture multiplied by the explosives concentration (such as 1,000 lbs of explosive soil that is 10% TNT has an NEW of 100 lbs). The concentration necessary to present an explosive hazard depends on the distribution and type of explosives in the soil and the soil's characteristics.

14-10.1.2. Primary (Initiating) Explosives. Soil containing 2% or more by weight of any primary explosive or mixture of primary explosives presents an explosive hazard and shall be treated as HC/D 1.1. Soil containing less than 2% by weight of any primary explosive does not present an explosive hazard.

14-10.1.3. Secondary Explosives. Secondary explosives are much less sensitive than primary explosives. Soil containing 10% or more by weight of either any secondary explosives or a mixture of secondary explosives presents an explosive hazard and shall be treated as HC/D 1.1. Soil containing less than 10% by weight of any secondary explosive or a mixture of secondary explosives does not present an explosive hazard.

14-10.1.4. Nitroglycerin, Nitrocellulose and Nitroguanidine. Soil containing 10% or more by weight of nitroglycerin, nitrocellulose or nitroguanidine presents an explosive hazard and shall be treated as HC/D 1.1. Soil containing less than 10% by weight of nitroglycerin, nitrocellulose or nitroguanidine does not present an explosive hazard.

NOTE

Care must be taken when applying this threshold rule to less permeable soils, such as clay, that may cause nitroglycerin to pond, rather than be absorbed.

14-10.1.5. Other Energetic Material (such as Liquid Propellants) Mixtures. The potential explosive hazard of such mixtures in soil may be unknown and may require testing. If the hazard is unknown, manage soil mixtures containing only propellants as secondary explosives, and all other soil mixtures containing energetics as primary explosives.

14-10.2. REAL PROPERTY (BUILDINGS AND INSTALLED EQUIPMENT). Military munitions operating buildings (such as munitions production or demilitarization facilities) and any installed equipment may contain residual explosives that present an explosive hazard. Of particular concern are building features (such as floors, roofs, walls, drains, internal and external piping, ventilation systems) in which explosives residues could present explosive hazards and industrial equipment, particularly equipment with internal cavities from facilities used in munitions production or demilitarization

operations (such as cast loading or milling, steam-out) that generated explosives residues (such as dust, vapors, liquids).

14-10.2.1. Prior to its use or transfer for purposes that are incompatible with the presence of an explosive hazard (see paragraph 14-14), such real property must be evaluated and determined not to present an explosive hazard. This determination must be formally documented.

14-10.2.2. If this real property presents an explosive hazard, explosives safety plans, such as an ESS if appropriate, must be submitted to the DWESO for review and approval before use or transfer for purposes incompatible with the presence of the explosive hazard.

14-10.3. CONSTRUCTION SUPPORT. Construction support may, based on site-specific data, be required during:

a. Intrusive activities (such as building construction, laying utilities, road improvements) on property known or suspected to contain MEC, MPPEH, or residual explosives hazards; or

b. The removal or remediation of debris or soil in areas where there is a probability of encountering MEC and/or MPPEH.

1-1.1.1. The responsible Navy authority (such as installation commander or designated representative) must use NOSSAINST 8020.15 (series) to determine whether such support is required and the level of effort of support required on a case-by-case basis. For Marine Corps projects contact PM Ammo for additional guidance.

14-10.3.1.2. When a determination is made that the probability of encountering MEC and/or MPPEH is low (that is, the likelihood of encountering MEC and/or MPPEH is considered possible, but not probable), “on-call” construction support must be provided by EOD or UXO-qualified personnel.

14-10.3.1.3. A ‘‘low’’ determination may only be assigned to those areas for which a search of available historical records and/or on-site investigation data indicates that, given the military or munitions-related activities that occurred at the site, the likelihood of encountering MEC and/or MPPEH is low. Munitions-related activities that may merit a “low” determination include, but are not limited to, the following former uses:

a. Small arms ranges used exclusively for testing or training with small arms ammunition;

b. Maneuver training, to include maneuver training involving the use of smokes, pyrotechnics and simulators;

c. Firing points;

d. Munitions inspection, handling, storage or transfers, including inert storage yards;

e. Air defense sites;

f. Munitions operating facilities; or

g. Areas where previous munitions responses have been completed.

14-10.3.1.4. Facilities where the processes used might have resulted in the generation of concentrations of munitions constituents (MC) high enough to present an explosive hazard should not have a “low” determination.

14-10.3.1.5. The discovery of MEC and/or MPPEH on “low” sites requires immediate reassessment of the level of construction support required.

14-10.3.1.6. When a determination is made that the probability of encountering MEC and/or MPPEH is moderate to high (that is, the likelihood of encountering MEC and/or MPPEH is considered moderately to highly probable), “on-site” construction support must be provided by EOD or UXO-qualified personnel. EOD- or UXO-qualified personnel must remove explosive hazards in the construction footprint, in accordance with a DWESO-approved ESS, before intrusive construction or other intrusive activities occur.

NOTE

When the depth of intrusive activities exceeds the detection limits of the geophysical instruments used, soil will be removed in layers to allow detection and removal of MEC and/or MPPEH in the construction footprint.

14-10.3.1.7. A “moderate to high” determination may be assigned to those areas for which a search of available historical records and/or on-site investigation data indicates that, given the military or munitions-related activities that occurred at the site, there is more than a low probability that MEC and/or MPPEH are present.

14-10.3.1.8. Munitions-related activities that may merit a “moderate to high” determination include, but are not limited to, the former uses:

a. Ranges where live-fire training or testing was conducted using munitions other than small arms ammunition;

b. Range impact areas;

c. Munitions OB/OD sites;

d. Munitions operating facilities where processes used might have resulted in the generation of concentrations of MC in high enough concentrations to present an explosive hazard; or

e. Munitions burial sites.

14-10.4. DREDGING. To support mission requirements, the Navy routinely dredges throughout the world to maintain ship access to ports and piers. These dredged areas may be located in areas that could contain munitions. Based on the Navy’s dredging experience, the routine maintenance of channels and pier-side locations does not normally result in the discovery of MEC and/or MPPEH. Rather, first-time dredging operations (such as initial dredging operations), pier replacement, and increased dredging depths in areas near/adjacent to former or current piers where ammunition is or was handled present a higher risk of encountering MEC and/or MPPEH. For these non-routine

dredging operations or dredging operations occurring in an area where MEC and/or MPPEH has been historically encountered, a risk assessment must be completed and an ESS prepared as appropriate.

14-10.5. ANOMALY AVOIDANCE.

14-10.5.1. Anomaly avoidance techniques shall be employed on properties known or suspected to contain MEC and/or MPPEH to allow the activities listed below while avoiding surface MEC and/or MPPEH and, when necessary, subsurface anomalies. Anomaly avoidance is used when:

a. Collecting environmental samples, conducting cultural resource studies, or performing other activities that require access to the site.

b. Conducting intrusive work such as drilling environmental monitoring wells, installing fences, etc.

14-10.5.2. During anomaly avoidance:

a. Escort support must be provided by EOD- or UXO-qualified personnel.

b. Discovered surface MEC and/or MPPEH must be avoided and the location noted and reported to appropriate authorities.

c. Detected subsurface anomalies must not be investigated, but they shall be marked, when appropriate, and avoided.

14-10.6. NATURAL PHENOMENA. Naturally occurring phenomena can cause MEC and/or MPPEH to move and should be considered.

14-10.6.1. Frost heave occurs when three conditions are met: (a) freezing temperatures are present in the soil column; (b) the soil is frost susceptible; and (c) there is sufficient moisture present in the soil to cause soil movement upon ice crystal formation. These three factors will be evaluated to assess the likelihood of frost heave moving residual MEC and/or MPPEH upward through the soil column. Where frost heave may have such an effect, procedures must be implemented to monitor the effectiveness of response actions for the affected area.

14-10.6.2. Other naturally occurring phenomena such as earthquakes, erosion or tidal changes could necessitate similar monitoring.

14-11. EXPLOSIVES SAFETY SUBMISSIONS (ESS).

The purpose of the ESS is to gain NOSSA/MARCORSYSCOM (PM Ammo) and DWESO approval of the explosives safety aspects of the implementation of a selected munitions response and of the protectiveness of the completed response, given the current, determined, or reasonably anticipated future land use of the property, as well as approval to handle, process, store, or treat MEC at an MRS.

14-11.1. A NOSSA/MARCORSYSCOM (PM Ammo)-endorsed and DWESO-approved ESS is required before the start of munitions response activities that involve the placement of explosives on a site, intentional physical contact with MEC and/or MPPEH or ground-disturbing or other intrusive activities in areas known or suspected to contain MEC and/or MPPEH. However, when circumstances dictate, a munitions response may proceed before DWESO approval provided that NOSSA/ MARCORSYSCOM (PM Ammo) has reviewed and approved the submission, the submission is at the

DWESO for review and approval, and the DON accepts that the DWESO approval process may impose different or additional requirements.

14-11.2. An ESS is required for:

a. A NDAI or NOFA determination

b. A Time Critical Removal Action (TCRA)

c. Construction support

d. Execution of the explosives safety aspects of the selected response

14-11.3. An ESS is not required for:

a. Munitions or explosives emergency responses.

b. Preliminary assessments or site inspections when intentional physical contact with MEC and/or MPPEH or ground disturbing or other intrusive activities are not intended.

c. Clearance activities on operational ranges. However, actions addressing military munitions burial sites on operational ranges are not exempt from ESS requirements.

14-11.4. With NOSSA/ MARCORSYSCOM (PM Ammo) concurrence, an ESS is not required for:

a. Munitions responses on former ranges used exclusively for testing or training with small arms ammunition.

b. On-call construction support.

c. Anomaly avoidance activities.

14-11.5. MRS INVESTIGATION OR CHARACTERIZATION. An ESS is required for MRS investigations or characterizations of an MRS that involve intentional physical contact with MEC and/or MPPEH. ESSs must address areas used for the storage of commercial and/or military demolition explosives, recovered MEC or MPPEH; planned or established demolition or disposal areas; and the MRA, MRS or response area boundaries.

14-11.6. NDAI OR NOFA ESS. When a NDAI or NOFA decision is made for an MRA or MRS or for a response area, an ESS must, at a minimum, provide site identification (such as name, unique identifier), the site location and a justification for the decision.

14-11.7. TCRA ESS. To expedite the approval process, TCRA ESSs may be submitted electronically to NOSSA/MARCORSYSCOM (PM Ammo). A TCRA ESS must, at a minimum, identify or provide the following information:

a. The site identification (such as name, unique identifier).

b. The TCRA's location.

c. The TCRA's purpose, in sufficient detail to explain the reason the TCRA was authorized.

d. The estimated date that the TCRA will be initiated and completed.

e. The munition with the greatest fragmentation distance (MGFD).

f. ESQD maps that show the minimum separation distances (MSD) for:

(1) The removal area within an MRA or MRS or within a response area for:

(a) Unintentional detonations.

(b) Intentional detonations.

(2) Areas or magazines for the storage of demolition explosives, recovered MEC, or MPPEH.

g. Actions and controls to be implemented (such as surface removal, evacuation, fences) as part of the TCRA.

h. DWESO-approved engineering controls (see DWESO Technical Paper 15) to be used, if any.

i. A point of contact for additional information.

14-11.8. CONSTRUCTION SUPPORT ESS. An ESS is required for construction support where the probability of encountering MEC and/or MPPEH is considered moderately or highly probable. This submission must provide the information outlined in paragraph 14-11.9, as appropriate. However, the information may be tailored based on site-specific conditions.

14-11.9. SELECTED MUNITIONS RESPONSE ESS. The information listed below is required in ESSs covering the selected munitions response to address known or suspected MEC and/or MPPEH.

14-11.9.1. Background. The ESS must provide, for informational purposes, a brief description of the reasons for the munitions response. The ESS must identify or provide:

a. The scope of munitions response activities.

b. Any significant differences in munitions response activities that will occur within the MRA or MRS.

NOTE

The ESS must identify significant differences in the current, determined or reasonably anticipated future land use of different sections of the property, significant differences in the types or conditions of MEC and/or MPPEH expected to be encountered, and any sections of the MRA that will not require munitions response activities.

14-11.9.2. Maps. The following maps and related information must be furnished:

a. Regional Map. A map depicting the regional location of the MRA or MRS (such as a state or boundary illustration map with the MRA indicated on it).

b. MRA or MRS Maps. Maps of the area or areas at which the munitions response is planned. These maps and related information shall indicate:

(1) Areas that:

(a) Contain or are suspected of containing MEC and/or MPPEH that the ESS addresses.

(b) Were suspected of containing MEC and/or MPPEH, but that research or site characterizations have subsequently shown do not contain such.

(c) The ESS does not address, but that either a previous ESS addressed or a future ESS will address.

(2) The current, determined or reasonably anticipated future land use of property, within the MRA or MRS that is known or suspected to contain MEC and/or MPPEH that the ESS addresses.

(3) The ownership and land use of adjacent properties, as appropriate.

(4) Any other situation that may influence or require consideration during the response (such as over-flight corridors, traffic routes).

14-11.9.3. Explosives Safety Quantity-Distance (ESQD). All ESQD arcs, including EZs, must be shown on the ESS ESQD map(s).

a. The planned locations for MEC and/or MPPEH response-related operations must be shown on ESQD maps. Preliminary site work, such as surveying, laying search lanes, and detecting anomalies, does not require establishment of an ESQD arc.

b. Mechanized MEC processing operations require special ESQD considerations. These processing operations can be classified as either "high-input" or low-input" based on a risk assessment that considers the degree of energy applied to any MEC or MPPEH potentially processed.

(1) High-input processing operations (for example, shredding, crushing) are intended to physically deform material including any MEC or MPPEH being processed, and certain excavations or dredging operations depending upon the risk assessment.

(2) Low-input processing operations (for example, on-site transport, dumping, screening, raking, spreading, sifting, and magnetically separating) are not intended to intentionally deform material including MEC or MPPEH being processed, and certain excavations or dredging operations depending upon the risk assessment.

(3) Hand-raking, manual sorting, removing vegetation with powered or non-powered hand tools using string or plastic cutting surfaces, and using non-intrusive fill interrogation devices are not considered mechanized MEC processing for the purposes of siting. Depending on the proposed operation and MGFD expected, operations involving hand-held vegetation cutting devices with metal blades or other cutting surfaces shall be considered mechanized MEC processing operations, unless determined otherwise by NOSSA or MARCORSYSCOM (PM Ammo), as appropriate.

c. ESQD arcs for both intentional and unintentional detonations, as well as mechanized MEC processing operations, must be established based on the MGFD and shown on ESQD maps for each MRS as follows:

(1) The MSD for unintentional detonations, which may be reduced by employing the engineering controls listed in DWESO Technical Paper 15 or other DWESO approved engineering controls, for:

(a) Nonessential personnel is the greatest distance of:

1. Blast overpressure, as computed by using the formula: $D = 40W^{1/3}$.

2. The calculated hazardous fragment distance (HFD) as provided in DWESO Technical Paper 16. For operations involving UXO, the operational risk assessment documented in the response section of the ESS serves as the hazard assessment required to authorize operations at HFD for these items.

(b) Team Separation Distance (TSD) is based on blast overpressure, as computed by the formula: $D = 40W^{1/3}$.

(2) The MSD for nonessential and essential personnel for intentional detonations (see chapter 13), which may be reduced by employing the engineering controls listed in DWESO Technical Paper 15 or other DWESO-approved engineering controls, is the greatest distance of:

(a) Blast overpressure, as computed by using the formula: D = 328W1/3.

(b) The calculated maximum fragmentation distance (MFD), as provided in DWESO Technical Paper 16.

(3) The MSD for mechanized MEC processing operations for:

(a) Nonessential personnel shall be calculated as follows:

1. For low-input processing operations, the same as for unintentional (that is, accidental) detonation (see paragraph 14-11.9.3.c(1)(a)).

2. For high-input processing operations, the same as for intentional detonation (see paragraph 14-11.9.3.c(2))

(b) Essential personnel shall, for low- and high-input processing operations:

1. Be protected by shields or barricades designed to defeat hazardous fragments from the MGFD, and

2. Be separated from the operation by K24 based on the munition with the greatest NEW that is reasonably expected to be encountered.

NOTE

DWESO-approved overpressure mitigating engineering controls may be used to provide an equivalent level of protection (2.3 psi [15.9kPa]).

d. MEC Hazard Classification and storage.

(1) Recovered MEC shall be managed as HC/D 1.1, unless assigned differently by NOSSA, and assigned an appropriate storage compatibility group (SCG). When storage at the MRA or MRS is necessary, recovered MEC and/or MPPEH must not be stored in the same PES as serviceable munitions.

(2) Nonessential personnel in structures shall be afforded protection equivalent to inhabited building distance (IBD) from storage locations. Nonessential personnel in the open shall be afforded protection equivalent to public traffic route (PTR) distance from storage locations; see chapter 8.

(3) There is no required ESQD for essential personnel from storage locations. However, structures containing offices for essential personnel should be located at intraline (IL) distance from explosives storage locations.

(4) The intermagazine distance (IMD), based on the NEW of the munition with the greatest NEW that is reasonably expected to be encountered, applies from intrusive operations to storage sites, to prevent propagation to a storage location in event of an accidental explosion during intrusive operations. For distances less than IMD, DWESO-approved engineering controls must be used during intrusive operations.

(5) Collection points are areas inside an MRS where recovered MEC and/or MPPEH items that are determined to be safe to move are temporarily held in the open, pending movement to another area for storage or destruction. Collection points do not require siting unless the IBD (K40) for the total NEW of the MEC and/or MPPEH items anticipated to be collected is the distance greater than the HFD of the single MGFD. The IBD exclusion zone and arms, ammunition and explosives security controls for the collection point must be maintained if the recovered MEC and/or MPPEH items are to remain at the collection point when there are no intrusive munitions response operations taking place. Multiple collection points must be separated by at least K11 based on the total NEW of the MEC and/or MPPEH items in each collection point.

e. Intentional Burning of Buildings Contaminated with Explosives Residues that Present an Explosive Hazard. All personnel shall be separated by K328 overpressure distance based on the MCE for the building, but not less than 1,250 feet.

f. Vegetation Removal. Vegetation removal in areas known or suspected to contain MEC and/or MPPEH shall comply with the following:

(1) Personnel using non-powered or powered hand tools such as hand saws, machetes, chainsaws, and string trimmers/brush cutters must use appropriate personal protective equipment.

(2) To prevent accidental contact with exposed MEC and/or MPPEH, string trimmers/brush cutters with a metal blade and chainsaws shall be used only in areas where there is a clear view of the cutting path of the blade.

(3) Burning vegetation to facilitate safe UXO clearance or removal operations is acceptable provided proper safeguards are in place to protect all personnel from unintentional detonations. These burns must be carefully planned and executed to manage explosives safety risks and environmental effects. During such burning operations, all personnel shall be at MFD from the burning or burned area, based on the MGFD, and shall remain out of the area until it has cooled for at least 24 hours.

g. ESQD-maps. The ESQD arcs and the MRA and MRS boundaries may be shown on the same map provided all PES and exposed sites ES are shown in sufficient detail.

(1) ESQD-maps should be to scale and legible.

(2) When a map does not contain a scale, all distances must be labeled.

(3) The ESQD map shall show:

(a) Each MRA or MRS.

(b) The storage locations for demolition explosives and recovered MEC or MPPEH.

(c) Locations (planned or established) for the intentional detonation or burning of MEC and/or MPPEH. Such locations include areas where contained detonation technology will be used.

(d) All ES and PES and their relationships. Describe any protective measures (such as evacuation of inhabited buildings, blocking off public highways) that will be used to eliminate or minimize any exposures within the established exclusion zone.

(e) All controlling ESQD arcs.

(4) ESQD Arcs. ESQD arcs must be shown for:

(a) Munitions. The MGFD shall be used for ESQD purposes for any particular MRA or MRS. However, if a munition with a greater fragmentation distance is encountered during the conduct of a munitions response, the ESQD arcs must be adjusted and the ESS or explosives safety site plan must be amended.

(b) Explosive Soil. To determine the ESQD arc for explosive soil, calculate the MCE by multiplying the weight of the mix by the concentration of explosives (for example, 1,000 lb of soil containing 15% TNT has an MCE of 150 lb). When concentrations vary within the site, weighted averages or other valid mathematical technique can be used to determine the exclusion zone; however, the ESS must support their use. The MSD for nonessential personnel shall be the greater of IBD for overpressure or the soil ejecta radius in accordance with the Buried Explosion Module (see DWESO Technical Paper 16) or other DWESO-approved procedures (see DWESO Technical Paper 15).

(c) Real Property (Buildings and Installed Equipment). For buildings and equipment that is known or suspected to be contaminated with explosives residues that present an explosive hazard and that is slated for cleanup or dismantlement, the MCE will be estimated on a case-by-case basis. The ESS shall include the rationale used for the estimation.

h. Soil Sampling Maps. When the property involves concentrations of explosives in the soil that are high enough to present an explosive hazard:

(1) Provide a map that indicates areas that were determined to contain explosive soil.

(1) Address methods (such as blending, bio-remediation) to be used to reduce explosives concentrations to a non-reactive level.

(2) Address methods (such as wetting the soil before blending) to be used to reduce any explosive hazards.

14-11.9.4. Types of MEC and/or MPPEH. Based on research or data generated from characterization of the MRA or MRS, provide the types of MEC and/or MPPEH expected to be encountered during munitions response activities.

14-11.9.5. Start Date. Provide the expected date that munitions response activities that involve the placement of explosives on a site, the intentional physical contact with MEC and/or MPPEH, or the conduct of ground-disturbing or intrusive activities in areas known or suspected to contain MEC and/or MPPEH are scheduled to start. Indicate the potential consequence, if any, if DWESO approval does not occur by the start date. Site preparation activities (such as surveying, gridding, locating anomalies) may be conducted while awaiting DWESO approval of an ESS.

14-11.9.6. MEC and/or MPPEH Migration. Describe naturally occurring phenomena (such as drought, flooding, earthquakes, erosion, frost heave, tidal changes) that could cause the migration or exposure of MEC and/or MPPEH and procedures for monitoring and managing such.

14-11.9.7. Detection Equipment and Response Techniques. The intent of this section is to describe the capabilities of detection equipment relative to the degree of removal required to support the current, determined, or reasonably anticipated land use.

a. Describe the techniques to be used to detect and remove MEC and/or MPPEH.

b. Identify the types of detection equipment to be used and the areas in which they will be employed.

c. Summarize methods used (such as test plots) to establish the expected detection capabilities of the equipment used. If anomaly discrimination will be used, explain what methods will be used to establish the expected accuracy of the discrimination.

d. When describing the detection methods:

(1) Describe the rationale (such as best available technology based on geology, topography, munitions characteristics, resource requirements) used to select the detection methods and technologies to be used during the response.

(2) Address any limitations (such as equipment, terrain, soil type) and mitigating actions, if any.

(3) Describe quality assurance and quality control (QA/QC) standards and pass or fail criteria for QA/QC control audits.

14-11.9.8. Disposition Techniques:

a. MEC and/or MPPEH.

(1) Briefly describe the MEC and/or MPPEH disposition techniques (such as OB, OD, contained detonation, incineration) to be used.

(2) If MPPEH is known or suspected to present an explosive hazard and will be detonated or vented on-site under the ESS, it does not need to be certified as MDEH prior to performing these operations.

(3) When recovered MEC and/or MPPEH known or suspected to present an explosive hazard cannot be destroyed within the MRA or MRS, address how explosives safety requirements will be met during transportation and during off-site storage, treatment or disposal. These disposition actions should consider requirements applicable to waste military munitions. Note that all such MEC and MPPEH must be certified MDEH prior to transport off site.

b. MPPEH. Describe the process to be used to manage MPPEH. (See paragraph 13-15 for specific guidance.)

14-11.9.9. Environmental, Ecological, Cultural and/or Other Considerations. Address any environmental, ecological (such as endangered species), cultural (such as tribal spiritual or gathering sites) and/or other factors that impacted, from an explosives safety perspective, the selection of the munitions response.

14-11.9.10. Technical Support. Summarize the EOD, Army Technical Escort Unit, or UXO technician or UXO-qualified personnel support that may be required.

14-11.9.11. Residual Risk Management. Address:

a. LUC. The ESS must summarize any LUC implemented and maintained on the property.

b. Long-term Management. The ESS must address how any potential residual risks will be managed.

14-11.9.12. Safety Education Program. Address methods to be used to educate the public on the risks associated with MEC and/or MPPEH.

14-11.9.13. Stakeholder Involvement. Briefly, summarize how stakeholder concerns affecting the explosives safety aspects of the selected munitions response were addressed.

14-11.9.14. Contingencies. To reduce the need to submit amendments, an ESS may describe alternative actions that could be used to address contingencies. For example, an ESS may list alternative DWESO-approved engineering controls (see DWESO Technical Paper 15) that may be used under specified conditions.

14-12. AMENDMENTS AND CORRECTIONS.

An amendment or correction to an approved ESS does not require the resubmission of the complete ESS package. However, the information submitted must be in sufficient detail to identify the specific ESS being amended or corrected, the affected portions, and the precise amendments or corrections.

14-12.1. AMENDMENTS. Amendments are only required when a change to an approved ESS increases explosives safety risks, identifies requirements for additional or increased explosive hazard controls, or increases or decreases an ESQD arc.

a. An amendment requires DWESO approval before the affected response actions can continue. However, response actions need not be stopped pending such approval provided:

(1) The amendment pertains to an area (such as MRA or MRS) for which an ESS has already been approved; and

(2) The DON:

(a) Institutes protective measures (such as increased ESQD, use of DWESO approved engineering controls) to address any explosive hazards.

(b) Accepts the possibility that the DWESO approval process may impose different or additional explosives safety requirements.

b. If the amendment is for a new response area (such as a new MRS), then the DWESO must approve the amendment before intrusive activities begin in the new response area.

c. To allow the response to continue with minimal interruption, amendments should be processed by electronic means.

d. Changes that require an amendment include:

(1) Constraints in funding, technology, access, and other site-specific conditions that impact the degree of removal addressed in the approved ESS.

(2) Any increase or decrease of the ESQD arcs.

(3) Changes in operations requiring explosives siting.

(4) Changes in LUC or long-term management to address residual risks. Such management changes would not require intrusive activities to stop while the amendment is being processed.

14-12.2. CORRECTIONS. Corrections address changes to an approved ESS that do not increase explosives safety risks or exposures. Corrections are primarily administrative in nature and provided for informational purposes. Corrections do not require approval.

14-13. AFTER ACTION REPORT (AAR).

14-13.1. PURPOSE. The purpose of an AAR is to document that the explosives safety aspects of a response have been completed in accordance with an approved ESS. An AAR is required for all responses completed in accordance with an approved ESS except NDAI or TCRA ESSs. An AAR shall be prepared and submitted within six months of the completion of the specific munitions response actions authorized by the ESS.

14-13.2. ROUTING. AARs are submitted through the same channels as the ESS and may be submitted electronically. However, the DWESO will acknowledge the receipt of an AAR and may raise issues that require resolution before land transfer or an alternative use can safely proceed.

14-13.3. CONTENTS. An AAR must contain the following:

a. A brief description of the MRA or MRS.

b. Either a request for NOSSA/MARCORSYSCOM (PM Ammo) to provide verification that the response was completed in accordance with the approved ESS or a statement that the verification is not necessary.

c. A request to cancel any EZ or site approval established in the ESS.

d. A summary of the MEC and/or MPPEH found.

e. A description of the relative effectiveness and any limitations of the technologies used during the munitions response and the effects on residual risk relative to that originally projected.

f. A summary of the Quality Control (QC) and Quality Assurance (QA) reports for the response.

g. Maps showing:

(1) Areas from which MEC and/or MPPEH was removed.

(2) Areas within a response area (such as within a MRA or MRS) where response actions were not performed and the rationale for not addressing those areas.

(3) The known or reasonably anticipated end use of each area.

h. A summary of the land use controls that were implemented, if any, and the areas to which they apply.

i. A summary of provisions for long-term management.

14-14. TRANSFER OF REAL PROPERTY.

Real property known or suspected to contain MEC and/or MPPEH will not normally be transferred or leased from DON control until a munitions response consistent with the determined or reasonably anticipated land use has been completed in accordance with a DWESO-approved ESS.

14-14.1. TRANSFER OF REAL PROPERTY OUTSIDE OF DOW CONTROL. Pursuant to DoW guidance on real property disposal, real property known to contain or suspected of containing explosive hazards may not be transferred out of DoW control (other than to the Coast Guard) until the Chairman, DWESO has approved measures submitted by the transferring Component to ensure the recipient of the property is fully informed of both the actual and potential hazards relating to the presence or possible presence of explosives, and restrictions or conditions placed on the use of the property to avoid harm to users due to the presence of explosives.

14-14.1.1. Notices. A recipient of such DoW property shall be provided:

a. Details of any past removal or remedial actions, including:

(1) the degree of MEC or MPPEH removal.

(2) the process used to determined that degree of removal to be adequately protective.

b. Written notification that detection and removal methods are not 100% effective, and that residual hazards may remain in areas (for example MRS) that were subjected to response actions.

14-14.1.2. Restrictions and Conditions. Based on potential explosive and CA hazards present and the projected use of the property, the following types of use restrictions and conditions shall be imposed, as appropriate, on such DoW property:

a. A prohibition on excavation or drilling in any areas known or suspected to contain MEC and/or MPPEH without appropriate permits or assistance.

b. A prohibition on disturbing, removing, or destroying any found MEC and/or MPPEH.

c. A requirement to immediately notify local law enforcement representatives of any discovery of MEC and/or MPPEH.

d. A prohibition on the construction or installation of particular improvements including utilities, roadways, airstrips, navigable waterways, pipelines, and structures, both above and below ground.

e. A prohibition on specific alterations, extensions, or expansions to such improvements.

f. A prohibition on certain types of uses, such as child care centers, housing, or farming.

g. A restriction to a specific type of use or owner, such as a state National Guard range.

h. Inclusion of DoW Component explosives personnel and the Chairman, DWESO in deliberations, decision making, and approvals pertaining to future munitions response activities to address MEC and/or MPPEH.

i. Inclusion of the restrictions and conditions in the recorded land records for the jurisdiction, to the extent allowed by state law.

14-14.2. TRANSFER TO OTHER DOW COMPONENTS. Real property known or suspected to contain MEC and/or MPPEH may be transferred to other DoW Components (such as Army, Air Force, Defense Logistics Agency) if the receiving organization is qualified to accept such real property. Records that accompany the transfer document must identify:

a. All known impact areas, OB/OD sites, and their associated safety zones (such as range fans) on the real property.

b. Any known or suspected MEC and/or MPPEH that may be present on the real property, by nomenclature or type, when known, and the known or suspected location. In addition, any records maintained on munitions expended and estimated dud rate by type, quantity, and location shall be transferred.

c. Any previous response efforts, to include munitions or explosives emergency responses or range clearance activities conducted within the real property.

14-14.3. TRANSFER TO STATE NATIONAL GUARD. Real property known or suspected to contain MEC and/or MPPEH may be transferred to a state National Guard. Records that accompany the transfer documents must:

a. Identify all known or suspect MEC and/or MPPEH areas.

b. Provide an estimate of the types and quantities of MEC and/or MPPEH that may be present on the real property, by nomenclature or type, when known, and the known or suspected location. In addition, any records maintained on munitions expended and estimated dud rate by type, quantity, and location shall be transferred.

c. Restrict the property's use to one that is compatible with the explosive hazards known or suspected to be present.

d. Require a munitions response in accordance with a DWESO-approved ESS before change of use to a new use incompatible with the explosive hazards potentially present or further transfer of the property.

14-15. CHANGE OF USE.

Prior to changing the use of a real property known or suspected to contain MEC and/or MPPEH to a use that is incompatible with the degree of MEC and/or MPPEH potentially present, a munitions response in accordance with a DWESO approved ESS is required.

CHAPTER 15
OPERATIONAL AREAS AND CONTINGENCY LOCATIONS

15-1. GENERAL.

15-1.1. INTRODUCTION.

15-1.1.1. This chapter provides conditions for the safe handling, storing and transport of ammunition and explosives in operational areas, typically at contingency locations, when the requirements of chapters 5, 6, 7, and 8 cannot be met. The hazards associated with ammunition and explosives operations and employment are compounded by mission requirements, operational necessity and the operational environment. The purpose of this chapter is to standardize procedures in operational areas while supporting the operational plans of commanders. These procedures are intended to:

a. Assist commanders and personnel in making the best possible and logical use of the limited facilities available for the safe storage and handling of ammunition and explosives.

b. Enhance the survivability and dependability of ammunition and explosives.

c. Reduce the hazards involved in handling, storing and transporting ammunition and explosives.

d. Provide personnel the tools to identify, communicate, and mitigate risk.

e. Identify at what level explosives safety risk can be accepted.

15-1.1.2. The complexities of the operating environment preclude any issuance from covering all emergencies which may arise. Personnel are expected to understand the principles on which the procedures in this chapter are based so that under circumstances not specifically covered they will take appropriate action.

15-1.2. APPLICABILITY.

15-1.2.1. The application of any alternate criteria presented in this chapter must be specifically approved by Marine Corps Systems Command (MARCORSYSCOM) or Navy Ordnance Safety and Security Activity (NOSSA) for operations within the continental United States (CONUS), or by the geographic combatant commander (GCC) when outside the continental United States (OCONUS).

15-1.2.2. When OCONUS, in accordance with applicable international agreements, implement host-nation, coalition, or multinational, or DoW service component base operating support-integrator (BOS-I) explosive safety regulations, and apply them whenever they are equivalent to or more protective than U.S. regulations and the minimum explosives safety criteria contained herein.

15-1.2.3. When established procedures of this chapter cannot be applied, the procedures recommended by competent authority, familiar with explosive operations and authorized by the GCC may be applied on a temporary basis to meet combat requirements until conditions can be improved. This authority does not apply to specific requirements for preliminary site approvals defined in chapter 8.

15-1.2.4. Training. Realistic training for contingency operations is inherently hazardous and requires constant risk assessment, a greater degree of risk acceptance, and a heightened explosives safety awareness. Application of the criteria in this chapter for training purposes is only authorized in the following situations:

a. At contingency locations, including semi-permanent contingency locations. During contingency and combat operations; no additional authorization is required.

b. The following training exercises in areas or at locations where site approvals are not required by preceding chapters are:

(1) Operational Ground Ranges. Training at ground ranges is conducted in accordance with the provisions outlined in MCO 3570.1C Range Safety and current range certification per MCO 3550.9 Marine Corps Ground Range Certification and Recertification Program at CONUS locations. For training on OCONUS ranges, units will apply the criteria in MCO 3570.1C for all live fire events.

(2) OCONUS Exercise Locations. Training at locations with a current explosives safety normalization agreement must adhere to host nation explosives safety criteria. Training at locations without a current normalization agreement must have an approved Munitions Risk Management Assessment (MRMA) or event waiver prior to any explosives operation.

(3) Training Off Federal Real Property. Training off federal real property is conducted in accordance with DODI 1322.28 Realistic Military Training Off Federal Real Property.

c. Main operating bases and forward operating sites (during contingency or combat operations) where site approvals are required by preceding chapters. For these, application of the criteria in this chapter is requested and authorized through the MRMAs, per CJCSI 4360.1C, or site approval review/approval process.

15-1.3. ASSET PROTECTION.

15-1.3.1. The protection of assets in an operational environment is paramount and can be the difference between mission success and failure. Depending on the operational value of the assets, greater protection may be warranted than required by explosives safety criteria. This chapter provides optional criteria and risk management tools not available in preceding chapters. These optional criteria provide greater protection for assets deemed sufficiently critical to warrant greater protection, and in some circumstances, provide lesser protection for those assets in which the mission requirements outweigh the increased risk to those assets.

15-1.3.2. Minimum Separation Distance. The required explosives safety distance is contained in the applicable tables of chapter 7. At this distance from the PES, mission capability will likely be impaired or delayed in the event of an explosives incident. This distance should prevent prompt propagation; however, delayed propagation between PESs is possible.

15-1.3.3. Asset Preservation Distance. Asset preservation is a distance greater than the minimum separation distance contained in chapter 7. At this distance from the PES, assets are expected to be usable and mission capable following an explosives incident. Asset preservation distance, normally PTRD, should prevent propagation between PESs. The placement of mission critical assets near ammunition and explosives storage/operating areas should be avoided whenever possible.

15-1.4. DEVIATION REQUIREMENTS.

15-1.4.1. The type of documentation required for explosives operations at operational areas and contingency locations, and the level at which approval can be granted, will be determined by the operational situation and whether the explosives operations are enduring or non-enduring in accordance with paragraph 1-6. NOSSA will receive copies of all Navy site approval actions and MARCORSYSCOM will receive copies of Marine Corps related site approvals.

15-2. SAFETY REQUIREMENTS, STANDARDS, AND PRACTICES.

15-2.1. POSTING EXPLOSIVE LIMITS AND REGULATIONS. The following posting requirements are mandatory unless security concerns dictate otherwise. In these cases, posting of firefighting and chemical hazard symbols is at the discretion of the activity commanding officer.

15-2.1.1. Magazines. If host country magazines or other approved containers, such as International Standards Organization (ISO) containers are used, the following information must be conspicuously posted on each magazine or other buildings containing ammunition and explosives.

a. The appropriate fire and/or chemical hazard symbols of ammunition and explosives stored therein shall be posted on the exterior door to the magazine or building; unless only storing HC/D 1.4 ammunition. HC/D symbols are not required to be posted on buildings that contain small quantities of HC/D 1.3 and 1.4 material used by security/alert forces.

b. The maximum permissible quantities of each HC/D, determined from the explosives safety quantity distances (ESQD) relationships specified in paragraph 15-3 or as prescribed in chapter 7 shall be conspicuously posted on the inside of one door of each magazine or other buildings containing ammunition and explosives.

15-2.1.2. Open Storage Sites. The information prescribed by the preceding paragraph should also be posted at each open ammunition and explosives storage site.

15-2.2. HANDLING AMMUNITION AND EXPLOSIVES.

15-2.2.1. Ammunition and explosives, whether in or out of packaging, either serviceable or unserviceable, must be handled carefully. Rough treatment may cause a fire or explosion, or can render the ammunition and explosives unsafe to handle. In addition to the handling regulations outlined in chapter 10, the following shall be observed during ammunition and explosives handling operations:

a. Ammunition should not be exposed unnecessarily to inclement weather or direct rays from the sun. It should be protected from mud, sand, dirt, and water.

b. Unserviceable ammunition and explosives will be segregated from serviceable assets.

c. Captured enemy ammunition (CEA) will be handled and stored in accordance with paragraph 15-8.

d. Hazards of Electromagnetic Radiation to Ordnance (HERO) as addressed in NAVSEA OP 3565 Volume 2 shall be taken into consideration.

15-2.2.2. Ammunition and explosives containers should not be opened until the ammunition and explosives are required for issue, use, or when necessary for inventory, inspection, or renovation operations. Dunnage should remain on hand until the ammunition has been expended.

15-2.2.3. The methods for neutralizing, eliminating, or grounding charges of static electricity prescribed in chapter 5 will be observed whenever possible in operations involving handling, storing, and renovation of ammunition and explosives. During training, ordnance items shall be grounded when assembling/disassembling and when loading/unloading combat aircraft.

15-2.3. MAINTENANCE AND REPAIR OF AMMUNITION AND EXPLOSIVES.

15-2.3.1. Maintenance or repair of ammunition and explosives or their containers must not be conducted in magazines, or open explosives storage sites. Specific operations may be performed in magazines under the circumstances described in paragraph 11-3.1. Specific renovation sites for performing maintenance must be established in accordance with siting criteria in paragraph 15-3.

15-2.4. FIRE PROTECTION.

15-2.4.1. In addition to the fire prevention, protection, and emergency planning regulations outlined in chapter 4, the following may be observed:

a. The removal or burning of flammable or dry local vegetation may be modified where necessary to conform to camouflage requirements and the need for emergency covering of ammunition and explosives stacks.

b. Dry vegetation must not be burned until after the area commander has been notified of the purpose and has authorized the operation. Extreme care must be taken to prevent the smoke or burning flame from revealing a critical position to hostile observers or aircraft.

c. Firebreaks may prove to be a disadvantage if they reveal the location of supplies. Therefore, the capabilities of hostile forces should be the determining factor in the extent to which firebreaks should be used.

d. Vehicles and trailers loaded with explosives must not be parked where vegetation fires present an obvious hazard. Vehicles and trailers must be parked and maintained in a way that allows rapid evacuation if a fire occurs.

e. Vehicles and trailers loaded with explosives must be parked 250 feet or more from vehicles and trailers transporting flammable liquids. Safety clearances may be reduced below 250 feet when compliance is not possible due to area constraints, but not under any circumstances less than 50 feet for fuel quantities up to 500 gallons or 100 feet for quantities greater than 500 gallons..

15-2.4.2. A complete firefighting plan should be prepared for each ammunition and explosives storage and handling area. Each plan should include the procedures to be observed for prevention of fires and the procedures to be followed in the event of fire. Wherever possible the firefighting requirements in chapter 4 will be followed.

a. All personnel must be familiar with their respective fire alarm stations and the proper manner of giving the alarm.

b. Redundant communications equipment must be available for the reporting of fires. Telephones should be in suitable weatherproof containers and their locations plainly marked.

c. Fire involving ammunition and explosives should be fought when the chance of extinguishing it is proportionate to the possible risk involved. Otherwise, personnel should limit their operations to preventing the spread of the fire and to protecting adjacent storage areas.

d. Bulldozers and similar equipment can be used to smother a fire with earth or separate burning ammunition and explosives and to act as a cover behind which firefighters may work.

15-2.5. COMMUNICATION. Communication plans and procedures both internal and external to ammunition and explosives areas must be developed to support operations. Plans must address specific action to be taken and must ensure that a primary and secondary (as determined by competent authority) means of communication are established with external sources (fire, medical emergency, command operations center, etc.) to ensure contact with emergency services personnel in the event of accidents or incidents during ammunition and explosives operations.

15-2.6. USE OF INDIGENOUS OR NON-DOW LABOR. In some instances, indigenous or other non-DoW contracted labor may be used in stevedoring operations, handling ammunition and explosives at storage areas, building native-type structures for temporary shelters or coverings, and as common labor. Additional safety and security precautions will be taken to prevent destruction of supplies and material through ignorance, negligence, or pilferage. When indigenous or non-DoW labor is used for handling and storing ammunition, personnel must be properly indoctrinated to the particular safety hazards of the operation.

15-3. STORAGE OPERATIONS.

This paragraph contains procedures applying to the storage of ammunition and explosives at operational areas, typically at contingency locations.

15-3.1. AMMUNITION SUPPLY POINTS. Ammunition storage and handling facilities are identified as ammunition supply points (ASP) and airfield ASPs. An ASP is normally established to facilitate the throughput for all Class V materiel received into the area responsible for consolidation and redeployment of this materiel. The Airfield ASP is established at or near airfields to provide Class V logistical support required for aircraft and defense of the aviation installation. Each of these facilities are subdivided into areas corresponding to the functions required to complete the mission, facilitate operations, and isolate hazards. ASPs should be located within reasonable distance from the combat elements being supported. Turnover of stocks is rapid and consideration must be given to security and ease of defense. Sites selected should be arranged into two or more storage sections in order to provide dispersion and expedite handling, receipt, and issue operations. Each component of the ASP must be used for its intended purpose. A typical area layout plan for an ASP is shown in figure 15-1. An explanation of each component is defined in the following paragraphs. Table 15-2 provides the minimum separation distances for these areas.

15-3.1.1. ASP Operations Center. The Operations Center provides direct support to ASP ammunition and explosives operations through administration of its programs and processes. The Operations Center is a nonexplosive support facility.

15-3.1.2. Vehicle Holding Area. The vehicle holding area is used for the temporary parking of motor vehicles laden with ammunition and explosives for inbound and outbound operations. Siting requirements are the same as though used for staging areas.

15-3.1.3. Segregation Area. The segregation area is a temporary area used to segregate and sort ammunition and explosives presenting a hazard or requiring reconfiguring that cannot be completed immediately upon receipt. Siting requirements are the same as those used for operating area.

15-3.1.4. Ammunition Storage Area. The ammunition storage area is used to store ammunition and explosives in accordance with figure 15-1 and table 15-1.

15-3.1.5. Demolition/Disposal Area. A demolition area is used for the intentional detonation of unserviceable or unsafe ammunition and explosives. This area may be selected within the confines of the ASP provided that it adheres to the minimum fragment distances in tables 13-1 and 13-2, but not less than intraline distances from other potential explosion sites based on the net explosive weights at those sites.

15-3.1.6. Salvage Area. The salvage area is used to store nonexplosive Class V material resulting from the use of Class V material. This includes boxes, containers, brass, tubes etc. All material stored in the salvage area must be properly assessed and documented as safe in accordance with paragraph 13-15.

15-3.1.7. Ammunition and Explosives Staging Areas. Ammunition and explosives staging areas are normally used as a holding area for outgoing ammunition and explosives and for ready access to combat aircraft loading areas. The ammunition and explosives staging area should be located near the entrance of an ASP to allow accomplishment of administrative requirements. The ASP may also use this area to safe haven vehicles. An ammunition and explosives staging area may also be located adjacent to, or in close proximity to the combat aircraft loading area to provide a suitable holding area for all-up-round weapons to meet daily operational requirements. This area must be designated away from both storage and assembly areas and will be used for ammunition-laden vehicles consolidating for a convoy or delivery to airfield operations. Co-located ASPs and airfield ASPs may have separate areas in order to reduce congestion during ammunition resupply/ground issue.

15-3.1.8. Sling Out Area. The ammunition and explosives sling out area is located near ASPs to provide for limited aerial resupply by rotary wing aircraft. The sling-out landing/loading area will be a minimum of a 125-foot diameter on an improved or hard surface area. This accounts for a UH-1/H-65 type helicopter. For additional helicopter landing/loading area dimensions consult MCRP 4-11.3E, Vol I.

15-3.1.9. Bivouac Area. The bivouac area is used for the billeting of ASP personnel directly related to the ASP explosives operations.

15-3.1.10. Weapons Assembly Area. Weapons assembly areas must be located as to facilitate safe and efficient movement of ammunition from the storage area. This area is a mandatory component of an airfield ASP. It must be of sufficient size to accommodate ammunition positioned for assembly/disassembly operations and the subsequent loading and transport of those munitions using various approved material handling equipment, trailers, and their prime movers. Storage compatibility and Q-D requirements still apply within this area with provisions for firefighting and grounding. This area may be used as a surveillance/maintenance area. Siting requirements are the same as those used for operating areas.

15-3.1.11. Surveillance/Renovation Area. The surveillance/renovation area is used for inspection, classification, and maintenance operations. This area may be used as a weapons assembly area provided that required grounding points are available. Siting requirements are the same as those used for operating areas.

15-3.1.12. Captured Enemy Ammunition Area. The captured enemy ammunition area must be separate from all other DoW ammunition and explosives.

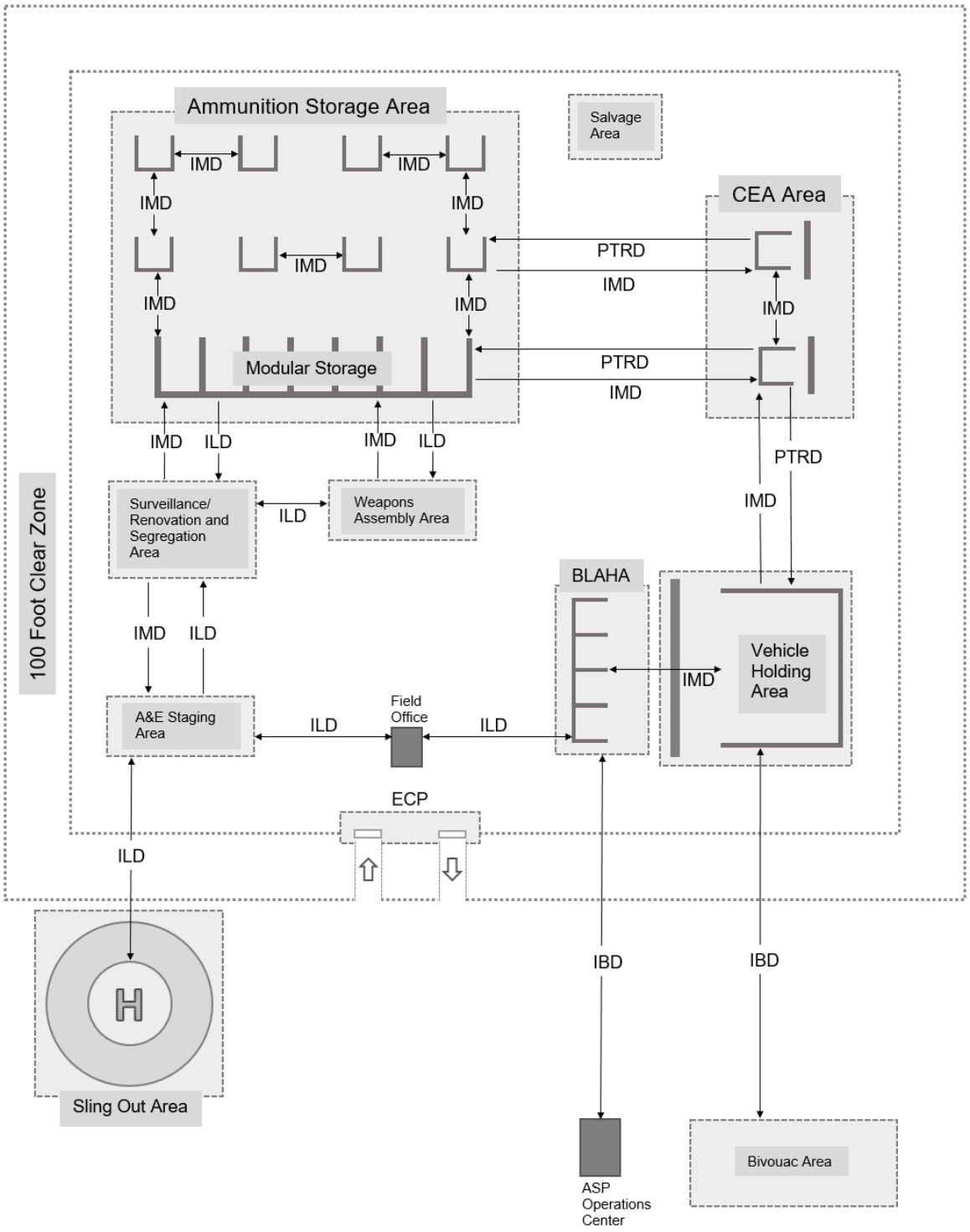

Figure 15-1. Typical Area Layout Plan for an Ammunition Supply Point

Table 15-1. Minimum Separation Quantity Distance for ASP Areas[1]

To → / From ↓	Storage Areas	Staging Areas	Captured Enemy Ammunition Area	Operating Areas	Sling Out Areas	Demolition / Disposal Area
Storage Areas	IMD	IMD	PTRD	IMD	ILD	Note 2
Staging Areas	IMD	IMD	PTRD	IMD	ILD	
Captured Enemy Ammunition Area	IMD	IMD	IMD	IMD	ILD	
Operating Areas	ILD	ILD	PTRD	ILD	ILD	
Sling Out Areas	ILD	ILD	PTRD	ILD	ILD	
Administrative and Bivouac / Billeting Area	IBD	IBD	IBD	IBD	IBD	
Boundaries	IBD	IBD	IBD	IBD	IBD	
Manned Nonexplosive Support Facility	IBD	IBD	IBD	IBD	IBD	
Unmanned Nonexplosive Support Facility	NR	NR	PTRD	NR	NR	
Demolition / Disposal Area	Note 2	Note 2	Note 3	Note 2	Note 2	

Key: IBD Inhabited Building Distance, ILD Intraline Distance, IMD Intermagazine Distance, NR Not Required, PTRD Public Traffic Route Distance

NOTES:

1. Asset preservation distances are PTRD and will be calculated using chapter 7 and the appropriate HC/D.

2. This area may be selected within the confines of the ASP provided that it adheres to the minimum fragment distances in tables 13-1 and 13-2, but not less than intraline distances from other potential explosion sites based on the net explosive weights at those sites.

3. Note 2 applies with the exception that Captured Enemy Ammunition Areas are required to be not less than PTRD from other potential explosion sites based on the net explosive weights at those sites.

15-3.2. GROUNDING.

15-3.2.1. Static electricity becomes a hazard when the accumulated electrical energy is discharged as a spark. For this reason, grounding points must be provided for the build-up phase of static sensitive ammunition and explosive items. In a combat environment, grounding criteria may not be possible as contained in chapter 5 due to the temporary nature of facilities. For temporary grounds that may be used for some period of time, ground rods should be approximately 8 feet long and 0.75 inches in diameter. They should be driven all the way into the earth. The ground rod should have a resistance to earth of 10,000 ohms or less when measured using the three point fall of potential method as described in appendix D, Section II. For short term grounding, a metal rod approximately 3 to 4 feet and 0.5 inches in diameter can be driven all the way into the earth.

15-3.2.2. In geographical areas covered by deep ice, such as Antarctica, establish a temporary ground by driving a metal ground approximately two feet long and 0.5 inches in diameter into the ice.

15-3.3. ESTABLISHING AMMUNITION AND EXPLOSIVES STORAGE AREAS. The site selected for an ammunition and explosives storage area should have good all-weather characteristics. Storage areas must be adequately drained, accessible in all weather and sufficiently level to facilitate operations. The factors discussed in the following paragraphs should be considered in establishing ammunition and explosives storage areas.

a. Storage in Arctic Conditions. The problems encountered in storing ammunition and explosives in arctic conditions are caused primarily by the nature of the terrain and climatic conditions: dry cold, wet cold, snow, rain, thaws, ice, and mud. A typical arctic island has a firm beach beyond which rises a slight knoll covered with sand or tundra. A swamp or area of marshy tundra extends from the hummock to the hills. The hills are usually best for ammunition and explosives storage. Methods of protecting ammunition and explosives from arctic climates are limited. The ideal method is to store ammunition and explosives in magazines; however, they are usually not available, particularly when the base is in the early stages of development. Covering stacks of ammunition and explosives with tarpaulins helps to protect the contents; however, the use of tarpaulins presents a problem in the winter since they cause ice to form around the bottom of the stacks by the thawing and freezing snow.

b. Storage in Temperate Conditions. The problems in storing ammunition and explosives in temperate conditions will vary and depend upon the exact location. Some areas are wet and have heavy undergrowth while other areas are dry and have scant vegetation. Supplies of ammunition and explosives may be protected from hostile bombing and artillery fire by reducing the size of ammunition and explosives stacks to one or two rows and spreading them over the storage area.. If good drainage facilities are available, caves may be dug into the sloping sides of hills or into high banks along the sides of roads. Ammunition and explosives stored in caves are generally protected from hostile forces and elements.

c. Storage in Tropical Conditions. The problems encountered in storing ammunition and explosives in tropical areas are caused primarily by the nature of the terrain, climatic conditions and insects. On tropic islands, a large part of the area may consist of thick jungle growth, steep slopes, swamps, and stream beds which are unsuitable for ammunition and explosives storage. All tropic areas have seasons of heavy rainfall. In many regions, a short, heavy downpour of rain may be expected daily. Heavy rains may convert level, firm ground into a sea of mud. Heat and humidity greatly accelerate deterioration of the ammunition and fungi may degrade ammunition and explosives components made of cloth or wood, such as propelling charge bags. Insects can destroy wooden containers, thereby exposing the ammunition and explosives to corrosion. In tropic areas, adequate dunnage and shelter as well as proper ventilation and drainage are essential for the storage of ammunition. The main objective of ammunition and explosives storage is to protect the material from intense sunlight and rain. Open storage should be protected by tarpaulins or temporary shelters to protect the ammunition and explosives. Material in containers that are not sealed and airtight are likely to deteriorate rapidly.

d. Storage in Desert Conditions. The storage problems with ammunition and explosives in desert conditions are caused primarily by climatic conditions such as intense heat during the day. Almost all deserts, regardless of location, have a lack of water, an absence of vegetation, large areas of sand, extreme temperature ranges, and intense infrared radiation. Terrain features include sand dunes, sand hillocks, deep sand, boulder-strewn areas, sharp rocks, abrasive brush and salt marshes. Sand dunes are great ridges of deep soft sand which usually form perpendicular to the direction of the prevailing wind. The surface of sand dunes is usually packed by the wind to a depth of about two inches and may

support considerably distributed weight, but due to its essential lack of compactness, may break under a driving or braking load. Sand hillocks occur where shrubs have served as a windbreak for windborne sand causing it to collect and build mounds. Stretches of deep, soft sand may be encountered anywhere in the desert, particularly in areas where there has been travel. Salt marshes are usually dry lakes or stream banks and may be encountered along the coasts or inland depressions. They may be traversed when dry but are generally impassable when wet or moist. The daily temperature range in the desert is extensive during all seasons and may range from 100°F or more during the day to below freezing at night. Wind conditions vary in the desert as in other terrain and may range from light breezes to storms of hurricane velocity during the day and night throughout the year. These storms are frequently followed by rapid changes in temperature. Dispersion of ammunition and explosives is extremely important in desert areas to provide adequate protection.

15-3.3.1. Use of Natural Cover. The site selected for an ammunition and explosives storage area should take advantage of natural cover or protection. Supplemental cover and protection can be provided by using camouflage netting, tents and tarpaulins. Discretion should be used, however, in selecting natural cover; for example, heavy woods provide good cover but they are damp in the winter and fire hazards in the fall and summer, and when isolated, may attract the attention of enemy aircraft and artillery.

15-3.3.2. Size of Area. The ammunition and explosives storage area should be large enough to fulfill the immediate space requirements and provide for possible expansion. In selecting the storage site, consideration must be given to the amount and type of ammunition and explosives stored and the length of time the site will be occupied.

15-3.3.3. Location. Ammunition and explosives storage areas should be located far enough away from inhabited buildings, airfields, petroleum product (POL) storage and other similar locations to minimize risk. Buildings where large numbers of persons are employed or billeted and aircraft operational areas must be located in a safe zone outside the storage area.

15-3.3.4. Drainage. Good drainage must be provided in ammunition and explosive storage areas, since ammunition and explosives deteriorate very rapidly in the presence of moisture. Ammunition and explosives should not be placed or stored in low areas. While low areas afford protection from bombardments, terrain analysis should be sought to predict the condition of proposed storage areas during periods of heavy rainfall.

15-3.3.5. Transportation. Ammunition and explosives storage areas should be provided with access roads and internal road networks to permit vehicles accessibility to any one section without crossing another section. Locations to railroad and air/sea port facilities should also be considered.

15-3.4. DIVISION OF STORAGE AREAS. Ammunition and explosives storage areas should be divided into two or more storage sections to provide adequate dispersion. The principal objective in dispersion of ammunition and explosives is to minimize losses in case of fire, accidental explosion or hostile action.

15-3.4.1. Method of Division. The terminology and method used in designating various divisions of each ammunition and explosives storage area follows:

15-3.4.1.1. Storage Section. The first division of ammunition supply points should be by storage sections. A desirable storage arrangement is to have three storage sections, each section being stocked with all the required types of ammunition. Such an arrangement provides adequate dispersion and permits the best possible efficiency through a revolving schedule of operations. For example, one

section can issue ammunition and explosives while the second section is receiving ammunition and explosives and the third section is performing inventory and segregating operations.

15-3.4.1.2. Storage Sub-Section. Storage sections should be further divided into storage sub- sections. The sub-section consists of a group of magazines (earth-covered or aboveground), field storage units with explosive stacks or a modular storage system. The type of storage arrangement is dependent on available land and facilities and the competing hazards of the battlefield.

15-3.5. CONTAINER STORAGE. Intermodal containers used for transporting ammunition may be temporarily used as ammunition storage shelters to provide protection from the elements. These containers will be considered aboveground magazines unless they are converted into earth covered magazines as defined in DWESO TP 15. They may also be used to protect stacks of ammunition in a Field Storage Unit (FSU) as defined in paragraph 15-6. Earth barricades may be used to reduce separation distances.

15-3.6. OPEN STORAGE. Storing ammunition in the open, while undesirable, can be unavoidable in operational areas. This paragraph references multiple validated methods to reduce quantity distance requirements while operating in these areas. When ammunition and explosives are stored in the open, as aboveground magazines, FSU's or modulars, special considerations must be given to protect the material from the elements.

15-3.6.1. Selecting Open Storage Sites. Sites selected for open storage of ammunition and explosives should be naturally shaded from the sun, particularly during the hottest part of the day, if outside local temperatures are likely to exceed 85°F.

15-3.6.2. Drainage. The open storage site should be level and well drained. Trenches must be dug around stacks of ammunition and explosives stored in the open to prevent water flowing under the stacks.

15-3.6.3. Vegetation. If ammunition and explosives are stored in damp tropical climates the stacks must be checked frequently to prevent brush, weeds, moss, and similar material from growing through the stacks and on the items. Contact between metal and damp organic material, especially roots and soil in which plants are present, hastens corrosion and oxidation.

15-3.6.4. Use Of Temporary Shelters. If magazines or existing buildings are not available for the storage of ammunition and explosives, temporary shelters may be erected.

15-3.6.5. Use Of Temporary Coverings. Stacks of ammunition and explosives stored in the open must be protected by temporary coverings as specified in paragraph 11-5.4.

15-3.6.6. Barricades And Revetments. Earth barricades or revetments around individual stacks of ammunition and explosives must be erected to afford protection from fire and explosion. The use of barricades and revetments will minimize sympathetic detonation of adjacent stacks and will be constructed per paragraph 8-2.5.

15-3.6.7. Field Storage Units.

15-3.6.7.1. When it becomes impractical to manage ammunition separation distances by NEW, short tons calculated on gross package weight may be used. This concept designates the storage areas as Field Storage Units (FSU), consisting of one or more stacks of ammunition. The principal objective of

the FSU concept is the dispersion of ammunition to minimize the loss in case of fire, accidental explosion, or enemy action.

15-3.6.7.2. Each type of ammunition must be stored in at least two widely separated FSUs to prevent the loss of any one FSU from seriously handicapping military operations by the loss of the entire supply of any item. The FSU concept does not provide the degree of protection from propagation afforded by magazine storage arrangements defined in chapter 7.

15-3.6.8. Organization of Field Storage Units. The following criteria must be followed to establish a FSU.

a. Short tons should be considered gross weight to include the weight of both ammunition and packing material.

b. Each FSU is limited to a maximum of 400 short tons (800,000 lbs.) with spacing between units established by table 15-2.

c. Each stack within an FSU is limited to a maximum of 20 short tons.

d. Stacks must be separated by a minimum of 50 feet. This distance only provides protection against fire. It does not provide complete protection from propagation of detonation by blast over pressure or fragments. The loss of stacks is viewed acceptable within an FSU. Separation between FSUs provide viable protection against propagation. To ensure asset preservation apply K24 distance between all storage sites using the NEW of the potential explosion sites.

e. Only one type of ammunition should be stored in a stack. If more than one type is stored in a stack, the ammunition must be arranged in a manner to facilitate inventory and inspection.

f. Compatibility per table 3-10 must be maintained within each stack.

Table 15-2. Quantity Distance for Field Storage Units

U.S.		METRIC	
Short Tons Per FSU	**Minimum Distance in Feet Between FSUs**	**Metric Tons Per FSU**	**Minimum Distance In Meters Between FSUs**
10	300	20	95
20	300	40	120
40	377	60	137
60	431	80	151
80	474	100	163
100	511	120	173
120	543	140	182
140	572	160	190
160	598	180	198
180	622	200	205
200	644	220	211
220	665	240	218
240	684	260	223
260	703	280	229
280	720	300	234
300	737	320	239
320	753	340	244
340	768	--	--
360	783	--	--
380	797	--	--
400	811	--	--

Conversion Factors:

2,000 pounds = 1 Short Ton = 0.907 Metric Ton

2,240 pounds = 1 Long Ton = 1.016 Metric Ton

12 Inches = 1 Foot = 0.304 meters

15-3.6.9. Concertainer Barricades. Concertainer (e.g., HESCO) barricades can be used as a rapidly deployed system to prevent, or reduce, propagation of explosions between stack, or concentrations of ammunition and explosives. The sand/earth-filled barricades can be used as conventional barricades under the criteria of paragraph 8-2.5 to provide reduced separation distances, or under controlled explosives loading to provide further reduced intermagazine distances as specified in DWESO TP-15.

15-3.6.10. Modular Storage. Modular storage reduces real estate, security, internal road network, and transportation requirements. In addition, this system provides protection from direct hostile fire; however, modular storage sites will require additional engineering support for initial construction of barricades. Modular storage will be constructed in accordance with paragraph 8-2.4.4.

15-3.7. SEGREGATION OF AMMUNITION AND EXPLOSIVES IN OPERATIONAL AREAS. Realizing that logistical considerations and combat requirements will routinely take precedence, circumstances where the compatibility requirements of table 3-10 cannot be adhered to are inevitable in operational areas. When it is necessary to violate the requirements of table 3-10 due to extenuating circumstances, the below requirements must be adhered to until the requirements of table 3-10 can be reestablished.

a. Compatibility group K ammunition, items containing toxic chemical agents must be stored in a separate FSU, magazine group, or module group to minimize the potential for contamination of other stocks in the event of an accident.

b. Compatibility groups J and L should be stored in separate FSU and at a minimum must be stored in separate stacks, magazines or modules at the maximum distance from other ammunition since items in these groups react violently to water and could prevent aggressive firefighting.

15-3.8. STORAGE IN EXISTING FACILITIES.

15-3.8.1. General. Ammunition and explosives may be stored in existing magazines, buildings, dry caves and tunnels, in open quarries, pits and similar areas at contingency locations only. Such storage is not authorized at training sites. Ammunition and explosives must not be placed in caves, tunnels, quarries, or pits which are not provided with adequate drainage. Whenever possible, available magazines and buildings should be assigned to the storage of the more fragile and perishable ammunition and explosives, such as guided weapons, pyrotechnics, ammunition and explosives containing smokeless powder, fuzes and similar components.

15-3.8.2. Use of Existing Magazines. Existing magazines used for storing ammunition and explosives shall be as prescribed in chapter 7 and in accordance with the regulations in paragraph 11-2. Existing earth-covered magazines may be considered (undefined) earth-covered magazines if the 2 feet earth-covered requirement can be verified.

15-3.8.3. Use of Existing Buildings For Magazines

15-3.8.3.1. General Requirements. Existing buildings may be used for the storage of ammunition and explosives. Buildings should be of fire-resistant construction, afford good protection against moisture and dampness, have means for adequate ventilation, have substantial flooring to support the ammunition, and in all respects afford adequate protection to adjacent areas. Intermagazine separation will be based on aboveground magazine (not earth-covered magazine) distances.

15-3.8.3.2. Inspection Prior to Use. Each building used for storing ammunition and explosives should be cleared of all hazards and debris. The walls, roofs, and ceilings of buildings which have been subjected to bombardment or partial destruction should be inspected for loose rubble, stones, building material, and the like, which may fall and damage ammunition and explosives containers or their contents. Abandoned buildings, which have been occupied previously by the enemy, should be inspected, by qualified personnel, completely and thoroughly for “booby traps” or delay action land mines before being used.

15-3.8.4. Caves and Tunnels. Caves and tunnels may be used to store ammunition and explosives if they are dry and free of moisture seepage. In hot climates, ammunition and explosives containing smokeless powder must not be stored in caves and tunnels unless they can be ventilated to prevent the accumulation of ether fumes. In dry climates, ammunition and explosives stored in caves or tunnels should be above the ground water level. Application of intermagazine separation distances, based on

earth-covered magazines, should be used to the greatest extent possible. Primary concern for propagation is the front to front orientation of the cave or tunnel opening.

15-3.9. CAMOUFLAGE. Good camouflage consists of keeping the appearance of an area as it looked prior to occupation. Noticeable changes in terrain may be spotted easily by enemy aerial reconnaissance. Usually, it is impractical to conceal the presence of an ammunition and explosives area but the extent and capacity of the installation may be concealed by camouflaging. Storage of ammunition and explosives may be effectively camouflaged with various materials.

15-3.9.1. Netting. Camouflage netting will provide protection from aerial and ground observation. It is also an effective method for reducing ambient temperature.

15-3.9.2. Avoiding Deep Shadows And Regular Outlines. To reduce shadows cast by stacks of ammunition, the stacks should be pyramid-shaped. Regular outlines may be broken by staggering rows of stacks, by varying the height of adjacent stacks, and by placing pyramid-shaped stacks along existing hedge-rows or stone walls.

15-3.10. BASIC LOAD AMMUNITION HOLDING AREAS (BLAHA). To fulfill their missions, certain units must keep their basic load ammunition in readiness within the immediate vicinity of their barracks (in armored vehicles, trucks, trailers, structures or on pads). These storage areas, known as basic load ammunition holding areas (BLAHA), are comprised of one or more storage sites and involve acceptance of risks to personnel, facilities, and equipment that are greater than that normally permitted. A Basic Load Storage Area (BLSA) is a location containing multiple BLAHAs. The minimum fragment distance requirements of chapter 7, apply for exposures involving nonmilitary personnel. In training operations, only the unit directly involved in the training exercise can be exposed to the increased hazard resulting from the reduced distances. All other personnel, public traffic routes, and any facilities other than those used for the exercise must meet minimum fragment distances of chapter 7.

15-3.10.1. Explosive Limits. Explosives quantities will be limited to 8,818 pounds NEW, excluding the explosives weight of HC/D 1.3 items unless the site contains only HC/D 1.3 items and any HC/D 1.4 ammunition. If there is an equal number of separate loading projectiles and propelling charges, the explosives weight of the propelling charges is not used in the computation. If the site only contains HC/D 1.3 material, the Q-D requirements of table 7-20 apply. Any site that exceeds 8,818 pounds NEW, based on these calculations must be separated in accordance with aboveground magazine distances of tables 7-12 and 7-14. Storage compatibility requirements are not applicable to BLAHAs.

15-3.10.2. Quantity-Distance Computations. When applying table 15-3, the following applies:

a. The total NEW of ammunition in each facility (armored vehicles, trucks, trailers, structures or on pads) will be used for computation of Q-D.

b. D1 distances shall be used between barricaded trucks and trailers (non-armored vehicles) and also between earth-covered shelters of light construction (i.e., MILVAN, ISO containers), sited side-to-side with a minimum of 2 feet of earth, and the ammunition shall be stored at least 3 feet from the end of the shelter.

c. D2 distances shall be used between barricaded earth-covered shelter of light construction sited front-to-front, provided the earth cover is a minimum of 2 feet, and between non-armored or light armored vehicles to the side or rear of an earth-covered shelter.

d. D3 distances shall be used between non-armored vehicles without a barricade; light armor and non-armored without a barricade, earth-covered shelters sited front-to-front without a barricade; non-armored vehicles, and light armored vehicles to the front of an earth-covered shelter without a barricade.

e. D4 distances shall be used for PTR from non-armored and light armored vehicles with basic load ammunition

f. D5 distances are IBD from non-armored and light armored vehicles with basic load ammunition.

g. D6 distances shall be used between loaded heavy armor and both public traffic routes and inhabited buildings. The heavy armor is expected to contain fragments so the distance is based on blast impulse only. When the vehicle load exceeds 331 pounds NEW, table 7-7 will be applied.

h. Inhabited buildings include barracks, headquarters and maintenance facilities not addressed in paragraph 15-3.11.

i. Blasting caps, when stored with basic load ammunition, will be separated from other types of explosives by the installation of sandbags. The sandbag barrier must be stable and provide line-of-sight protection to the other explosives.

j. Heavy armored vehicles are expected to contain most of the blast and fragments from an internal explosion and are well protected from an external explosion. For this reason there is no required separation from a heavy armored PES to a heavy, light, or non-armored exposed site (ES). The hatches of heavy armored vehicles must be kept closed to be considered as heavy armored vehicles; otherwise, they are considered as light armored vehicles. M1 Abrams tanks are considered heavy armor. Use table 15-4 to determine the applicable Q-D for heavy, light and non-armored vehicles.

k. Light armored vehicles are expected to resist external detonations but not contain the blast and fragments of an internal detonation. Light armor has reduced separation distance between vehicles but no reduction to external facilities. The vehicle hatches/ramps must be closed to be considered light armor. The mine resistant ambush protected (MRAP) vehicle is considered a light armored vehicle.

l. Non-armored vehicles or sites are not expected to contain or resist a detonation. Non-armored vehicles or sites require greater distance between non-armored sites and significant distances to exterior facilities. Barricades between non-armored vehicles and sites can reduce the internal separation requirement but does not decrease the external separation requirement. The high mobility multi-purpose wheeled vehicle (HMMWV), trailers, helicopters, MILVANs, and open stacks of ammunition are examples of non-armored vehicles or sites.

Table 15-3. Quantity Distance Table for Basic Load Ammunition Holding Areas

NEW (lbs)	Quantity-Distance (feet)					
	D1	D2	D3	D4	D5	D6[1]
10	4	13	26	284	474	66
15	5	15	30	303	506	66
20	5	16	33	317	529	66
30	6	19	37	336	561	66
50	7	22	44	361	601	66
70	8	25	49	377	628	66
100	9	28	56	395	658	66
150	11	32	64	489	815	81
200	12	35	70	532	886	98
250	13	38	76	532	886	114
300	13	40	80	532	886	130
350	14	42	85	532	886	
400	15	44	88	532	886	
500	16	48	95	532	886	
600	17	51	101	532	886	
700	18	53	107	532	886	
800	19	56	111	532	886	
900	19	58	116	532	886	
1,000	20	60	120	532	886	
1,200	21	64	128	532	886	
1,400	22	67	134	532	886	
1,600	23	70	140	532	886	
1,800	24	73	146	532	886	
2,000	25	76	151	532	886	
2,500	27	81	163	532	886	
3,000	29	87	173	532	886	
3,500	30	91	182	532	886	
4,000	32	95	190	532	886	
4,500	33	99	198	532	886	
5,000	34	103	205	532	886	
6,000	36	109	218	567	945	
7,500	39	117	235	634	1057	
8,818	41	124	248	687	1146	
Distance Functions	D1 = $2W^{1/3}$	D2 = $6W^{1/3}$	D3 = $12W^{1/3}$	D4 =60% of D5	(note 2)	

NOTES:

1. When vehicle load exceeds 331 pounds NEW, table 7-7 applies.
2. (NEW for Q-D purposes (NEWQD))
   a. NEWQD < 180 lbs: Use equations from table 7-9 note 1.
   b. 180 lbs < NEWQD < 5,500 lbs: 886 feet (ft)
   c. 5,500 lbs < NEWQD < 8,818 lbs: D5 = 12.2W1/2
   d. D5 < 886 ft: Use equations from table 7-9 note 2.
   e. 886 ft < D5 < 1,146 ft: NEWQD = (D5/12.2)2 with a maximum of 8,818 lbs.

Table 15-4. Q-D Requirements for Armored Vehicles

To ES	Exposure	From PES		
		Heavy	Light	Non-Armored
Heavy	IMD	N/R	N/R	N/R
Light	IMD	N/R	D1 from table 15-3	D1 from table 15-3
Non-Armored	IMD	N/R	D3 from table 15-3[4]	D3 from table 15-3[4]
	IBD	D6 from table 15-3	D5 from table 15-3	D5 from table 15-3
	PTRD	D6 from table 15-3	D4 from table 15-3	D4 from table 15-3

NOTES:

1. "Heavy Armored," "Light Armored," and "Non-Armored" are defined in paragraph 15-3.10.2
2. N/R = No IMD required
3. Use $D=24W^{1/3}$ or $D=30W^{1/3}$ instead of D1 and D3 for asset preservation.
4. D1 distance can be applied if a barricade is provided between PES and ES.

15-3.11. VEHICLE AND EQUIPMENT MAINTENANCE. The following requirements apply to vehicle and equipment maintenance.

a. Maintenance of military vehicles and equipment, when the maintenance work is performed exclusively by and for the military personnel of the unit/units storing ammunition at the BLAHA, must be separated from the PES by unbarricaded intraline distance.

b. Crew-level maintenance may be performed on an uploaded vehicle without downloading ammunition. However, ammunition-laden vehicles undergoing authorized minor maintenance must be separated from fire, spark, or flame producing devices by at least 50 feet.

c. Ammunition must be removed from vehicles scheduled for repair or maintenance requiring welding or torch cutting, disassembling fuel or electrical systems, or removing power packs.

d. Ammunition must be downloaded before vehicles are delivered to maintenance teams or shop areas.

e. Ammunition downloaded from vehicles undergoing maintenance or repair must be removed to an ammunition storage area or loaded in an extra or standby vehicle. If the ammunition is retained in the BLAHA it must be stored in accordance with paragraph 15-3.10.2.b or 15-3.10.2.c.

15-3.12. EFFECTS OF EXPLOSIONS AND PERMISSIBLE EXPOSURES.

15-3.12.1. General. In the assessment of the hazard associated with a given situation, the principle effects of the explosive output to be considered are blast pressure, primary and secondary fragments, thermal hazards, and chemical agent hazards. The segregation of ammunition and explosives as identified by storage compatibility grouping provide a degree of safety and protection from secondary explosions. When the combat situation presents siting and storage scenarios not addressed in this document, the effects of possible explosions and permissible exposures outlined in table 15-5 must be considered in establishing Q-D and assessing what is an acceptable risk to persons, property, and equipment.

Table 15-5. Effects of Explosions and Permissible Exposures

Blast Overpressure (psi)	Equivalent Q-D	Safety Factor*	Estimated Damage to Structures	Personnel
0.9-1.2	Inhabited Building Distance	$40\text{-}50W^{1/3}$	5-10%	Minor injuries may be caused by fragments
1.7-2.3	Public Traffic Route	$24\text{-}30W^{1/3}$	10-25%	Moderate to Minor
3.5	Unbarricaded Intraline	$18W^{1/3}$	25-50%	Moderate to Serious Damage
8	Unbarricaded Aboveground	$11W^{1/3}$	50-100%	Serious Blast, Fragments or Debris, Transportation
12	Barricaded Intraline	$9W^{1/3}$	75-100%	Serious Blast, Fragments or Debris, Transportation
27	Barricaded Magazine	$6W^{1/3}$	TOTAL	Major death by blast, debris, fragments

* This degree of safety is based on what is considered an acceptable risk for various situations. This risk factor is expressed by the letter "K" and is used in the formula $D=KW^{1/3}$, where D represents separation distance in feet and W is the net explosives weight in pounds. The lower the K-factor, the greater the acceptance of damage.

15-3.13. LIMITED QUANTITIES OF HC/D 1.2.2, HC/D 1.3, OR HC/D 1.4. For reasons of operational necessity, limited quantities not to exceed 50 lbs. NEW of a combination of HC/D 1.2.2, HC/D 1.3, or HC/D 1.4, may be stored and used in operations, to include armored vehicles located outside a Basic Load Ammunition Holding Area or an Ammunition Holding Area, without regard to QD and DoW explosives safety site approval. The amount of HC/D 1.4S is not included in the limits identified above, however no more than 3,000 lbs. NEW of HC/D 1.4S can be stored. These areas must be approved in writing by the installation commander and meet all fire, security, and lightning protection system requirements of this chapter and the OPNAVINST 5530.13 (series) for Navy units and MCO 5530.14 (series) for USMC units.

15-3.14. FIELD STORAGE. Field storage is primarily intended for situations that require limited amounts of ammunition and explosives munitions to be stored away from the standard storage environment to support specific training or for small units operating in austere environments during combat missions. The following guidelines will govern temporary storage at these facilities/sites:

a. Field storage is authorized for up to 90 days on host nation ranges approved for use by GCC, or delegated service component to meet training requirements. The explosives arcs from the field storage site must be contained within the parameters of the established range. Explosives arcs that exceed range parameters will require an event waiver from GCC delegated risk decision authority.

b. The GCC or delegated service component shall provide specific guidance on risk and consequence management for military munitions storage at contingency operating bases and combat outposts.

c. Storage sites for training operations not located on approved host nation range/training areas shall be formally sited or have an approved MRMA or event waiver prior to any explosives operation.

15-3.15. MULTINATIONAL AMMUNITION AND EXPLOSIVES.

15-3.15.1. Multinational Ammunition And Explosives Storage. Multinational (MN) ammunition may be stored with DoW ammunition and explosives only if it has been hazard classified in a manner equivalent to DoW explosives hazard classification procedures as outlined in Defense Explosives Safety Regulation (DESR) 6055.09. MN ammunition must have an established ammunition surveillance program. MN ammunition and explosives with a DoW-equivalent hazard classification that is stored with DoW ammunition and explosives:

a. May be stored in the same storage structure or on the same storage pad but must be separated from DoW ammunition and explosives.

b. May be stored in the same storage structure or on the same storage pad together with DoW ammunition and explosives provided the risk is accepted by the appropriate authority. The acceptance of risk must be documented per applicable GCC instructions and must consider the surveillance, propellant stability controls, packaging, and transportation, handling and operational practices of such ammunition and explosives.

c. MN ammunition and explosives, either without a DoW-equivalent hazard classification or when the equivalency of the hazard classification procedures is uncertain, will be separated from DoW ammunition and explosives by IMD.

15-3.15.2. Multinational Ammunition And Explosives Operations. The explosives safety separations between an ammunition and explosives operation and a storage site depends on several factors including the hazard class present, the net explosives weight present, and the level of protection required. The following are the minimum required levels of protection when ammunition and explosives operations are involved.

a. Concurrent DoW and MN ammunition and explosives operations (e.g., ammunition issues, returns, inspections) will be separated by a minimum of intraline distance (ILD).

b. Non-concurrent DoW and MN ammunition and explosives operations may be performed on the same pad, site, or facility provided the ammunition and explosives of the first party is removed prior to the second party beginning ammunition and explosives operations.

c. Ammunition and explosives operations (US or MN) at risk from ammunition and explosives storage sites (US or MN) will be given ILD level of protection from that storage site.

d. Ammunition and explosives storage sites (US or MN) at risk from ammunition and explosives operations (US or MN) will be given IMD level of protection from that ammunition and explosives operation.

e. MN ammunition and explosives storage or operations will be separated by IBD and/or PTR distance from non-ammunition and explosives facilities or locations.

f. Where mission necessity or operational constraints will not allow minimum separation distances to be maintained, a deviation from the appropriate command level, or when required, from the GCC, or delegated service component is required. During MN operations, if foreign ammunition and explosives encumbers DoW personnel or resources, the deviation will be coordinated with the MN units involved. Mitigating measures may include a memorandum of agreement (MOA) to allow the affected Commander to inspect MN ammunition and explosives sites for compliance with safe storage and operating practices. Such agreements will be coordinated in accordance with GCC policies and instructions.

15-3.16. SEPARATION FROM FUEL. Certain operations may require large amounts of on-site, operational fuel quantities. Operational fuel needs must be limited to the mission essential quantity only. The basis for arriving at the mission essential quantity will be documented and approved by the installation commander. However, in almost all other cases, the following operational fuel limits and separation distances will meet the operational fuel needs and must be applied:

a. Quantities up to 500 gallons (1,893 liters) must be separated from PES by at least 50 ft (15.24 meters (m)).

b. Quantities between 500 to 5,000 gallons (1,893 to 18,927 liters) must be separated from PESs by at least 100 ft (30.5 m).

c. For aboveground unprotected bulk storage (i.e., greater than 5,000 gallons [18,927 liters]), apply IBD.

d. For further protection from an accidental explosion at a PES and to provide fire protection to surrounding PESs and exposed sites, fuel storage locations should be barricaded. If designed properly, the barricade will also serve as a dike in the event of a fuel leak. Fueling trucks or tankers, when not being used, should be separated from PESs by barricades as well.

15-4. AVIATION OPERATIONS.

The conduct of aviation operations in operational areas introduces unique safety issues associated with the rapid movement of large amounts of ordnance and the necessary concentration of valuable assets. Efforts to decrease these risks through the proper use of features such as barricades or revetments must be considered to decrease the magnitude of a potential event or increase explosive capacities. The specific criteria provided in this paragraph is associated with operations employing the expeditionary airfield (EAF) weapons support system with specific emphasis on the unique considerations of the various ordnance operating areas and the conduct of the forward arming and refueling point (FARP) forward operating base (FOB) concept.

15-4.1. EXPEDITIONARY AIRFIELD. The EAF weapons support system can be employed in multiple configurations at existing civilian airfields or improvised airfields converted/created to support the tactical situation. These configurations are hereafter cumulatively referred to as the EAF.

15-4.2. ORDNANCE OPERATING AREAS. When the EAF is employed it has the same basic components as a permanent air base relative to ordnance operations, however, their physical character and orientation may be altered by site limitations. Figure 15-2 represents a typical EAF layout. The ordnance operating areas of the EAF are discussed in paragraph 15-4.2.2 through 15-4.2.7 and mandatory separation distances between these areas are shown in table 15-6.

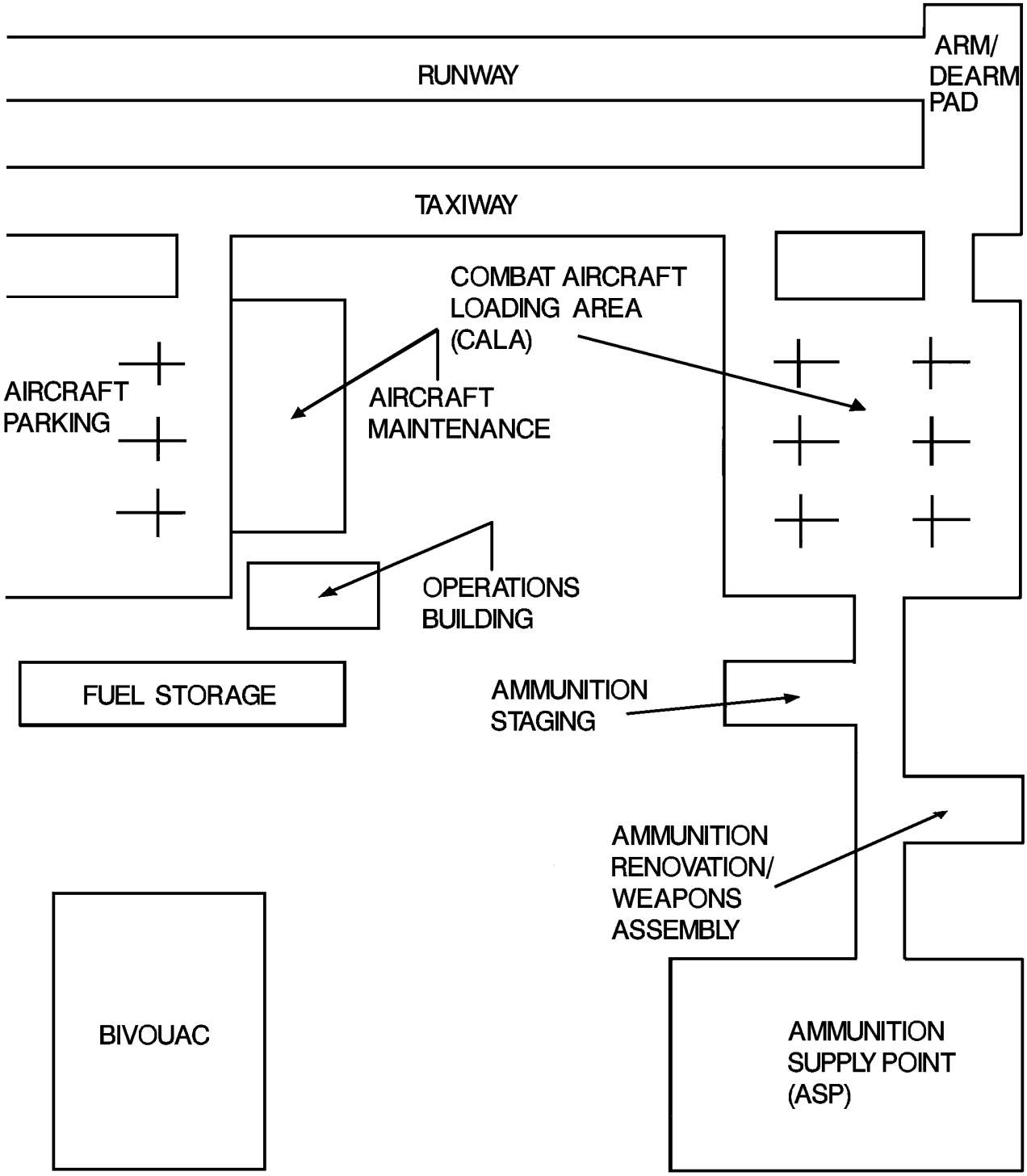

Figure 15-2. Typical Expeditionary Airfield Layout

Table 15-6. Separation Distances at Expeditionary Airfields

To → / From ↓	Ammo Supply Point	Combat Aircraft Loading Area	Ammo Staging Area	Weapons Assembly/ Ammo Maintenance	Arm/Dearm Area	Aircraft Parking[2]	Aircraft Maintenance	Operations Facility	Fuel Storage (7,500 Gal)	Bivouac/Billeting
Ammo Supply Point	11	30[3]	11	18	18	24/30[3]	24/30[3]	24/30[3]	40/50	50
Combat Aircraft Loading Area	18	11	11[1]	18	11	24/30[3]	18	18	40/50	50
Ammo Staging Area	11	11[1]	11[1]	18	11	24/30[3]	18	18	40/50	50
Weapons Assembly/ Ammo Maintenance	11	18	11	18	11	24/30[3]	18	18	40/50	50

The numbers at an intersection of horizontal and vertical columns indicate the K factor for use in the distance requirement formula $D = KW^{1/3}$. Distances in feet respective of these K factors are provided in tables 7-7, 7-10, and 7-14.

NOTES:

1. Can be reduced to K6 with barricades.

2. Used when it is desired to protect aircraft not loaded with ordnance from potential destruction. See paragraph 15-4.2.2

3. K40/50 inhabited building separation distance required during training.

15-4.2.1. Combat Aircraft Loading Area (CALA). Due to the character of an EAF, it is normally impractical to set aside an area solely for the purpose of loading ordnance on aircraft. In most cases, the aircraft parking area will also support ordnance loading and routine aircraft repairs. Ordnance-loaded aircraft pose an enormous potential for propagation of an explosion between aircraft if adequate separation is not maintained between aircraft. The primary goal is to reduce the maximum credible event to one aircraft rather than risk the loss of all aircraft on the parking apron. K11, aboveground intermagazine distance, measured between ordnance items on each aircraft, is necessary to prevent prompt propagation if no form of barricade exists. This distance can be reduced to K6 if the line of sight between ordnance items can be interrupted by a barricade as prescribed in paragraph 8-2.5. When these distances can be maintained, the maximum credible event on the CALA is one aircraft. Separation to other adjacent facilities can then be based on the maximum load at the aircraft nearest the facility being sited. The placement of barricades around the perimeter of the aircraft loading area will also aid in the protection of aircraft from other potential explosives sources. If large ordnance loads arrive by cargo aircraft, they must use the same separation distances between cargo aircraft to ordnance loaded combat aircraft.

CAUTION

The use of intermagazine distance, both K11 and K6 barricaded provide protection only against the simultaneous detonation of mass detonating explosives on adjacent aircraft or at adjacent sites. Intermagazine distance does not prevent serious damage to aircraft or provide protection against the propagation of an incident from the source by fragments, debris or fire to the ammunition and explosives on other aircraft. To obtain asset preservation, K24/30 distance should be applied for HC/D 1.1 ammunition or PTR distance for HC/D 1.2 and 1.3 material.

15-4.2.2. Aircraft Parking Area. When it is desired to protect certain aircraft (such as tankers, cargo or reserve) not loaded with ordnance from potential destruction, K24/30 distance will be used from all explosives sources. At this distance, aircraft may sustain damage due to fragments, but should, in most cases, remain operable.

15-4.2.2.1. Hardened Aircraft Shelters (HAS). Although not directly employed by the DON, HASs offer reduced explosive safety distance criteria and increased protection for critical assets when the criteria of DWESO TP-15 is correctly applied. For more information on the utilization of existing HASs, contact NOSSA or MARCORSYSCOM.

15-4.2.3. Aircraft Maintenance Areas. Aircraft maintenance areas and facilities necessary for the operation of the airfield should be separated from explosives to the maximum extent that local conditions and operational requirements permit. The minimum separation required is K18 intraline distance. This does not apply to routine servicing and minor maintenance on loaded aircraft in the CALA, in accordance with NAVAIR 00-80T-103.

15-4.2.4. Arm/Dearm Areas. Free-fall ordnance may be armed/dearmed on the aircraft parking ramp. Forward-firing ordnance shall be armed/dearmed in an area specifically designated as a forward-firing area with a safe aircraft heading established by Airfield Operations. If a safe aircraft heading cannot be obtained, earth revetments or similar risk mitigation measures (barricades) should be used.

15-4.2.5. Ammunition and Explosives Staging Area. Assembled ordnance should not exceed the amount of ordnance necessary for a maximum contingency launch plus one complete turn-around for each aircraft. Siting rationale is discussed in paragraph 15-3.1.7. Additionally, all assembled ordnance shall be mobile and on armament weapons support equipment (AWSE) in order to facilitate prompt evacuation.

15-4.2.6. Fuel Storage. Fuel storage criteria is discussed in paragraph 15-4.5.3.2.

15-4.2.7. Other. All other pertinent aviation ordnance operating areas are discussed in paragraph 15-3.1.

15-4.3. OPERATIONS INVOLVING EXPLOSIVE MATERIAL. Operations at an EAF have the potential for an extreme increase in operating tempo due to changes in the combat environment. High combat tempo with minimal time for preparation combined with under developed airfield facilities does not negate the requirements for sound judgment using established/published procedures.

15-4.3.1. Weapons Movement. The presence of airborne weapons outside of designated weapons storage areas greatly increases the danger of a fire or explosion. To minimize this danger, only that

quantity of weapons required to sustain operations shall be transferred from the storage area to the flight line.

15-4.3.2. Weapons Staging. Airborne weapons shall be positioned in designated staging areas near the flight line to be readily available in adequate time for safe aircraft loading. When possible, these areas should be barricaded or revetted to reduce separation requirements. Staging areas for assembled weapons shall be restricted to those that:

a. Have at least two clear routes of access.

b. Are located as far as practical from Liquid Oxygen (LOX) carts.

c. Adhere to fuel storage criteria discussed in paragraph 15-4.5.3.2.

d. Are sited at K11 distance from ordnance loaded aircraft, or K6 distance when barricaded or revetted.

e. All weapons in the staging area shall be mobile and loaded on AWSE such as A/M-32K10 Bomb Trailers. Additionally, staging areas shall be used for ready service only and not for protected storage or for extending the total weapons storage capacity of the airfield.

15-4.4. HAZARDS OF ELECTROMAGNETIC RADIATION TO ORDNANCE (HERO). Emission control (EMCON) bills are required for all Navy and Marine Corps EAFs or contingency location airfields. In the absence of an EMCON bill for the Airfield, the Air Combat Element ordnance officer will develop a temporary HERO EMCON bill by researching, with the assistance of the electronics officer, HERO separation distances for all transmitter/antenna systems as determined by NAVSEA OP 3565 Volume 2. When HERO arcs overlap ordnance areas/evolutions containing electrically initiated ordnance which are HERO UNSAFE HERO SUSCEPTIBLE as defined in NAVSEA OP 3565 Volume 2, the offending transmitter must be optionally moved, reduced in power, or silenced. Chapter 5 of NAVSEA OP 3565 Volume 2 discusses the process of developing a HERO EMCON Bill. HERO separation distances for transmitters not listed in NAVSEA OP 3565 Volume 2 can be determined by contacting Naval Surface Warfare Center, (Dahlgren Division) NSWCDD (Code B55) or by using the tools found in the E3 Team Online Knowledge Management System (https://e3.nswc.navy.mil) or through using the formulas provided in chapter 2 of NAVSEA OP 3565 Volume 2. In addition, NSWCDD has technical capability to provide ordnance status for items containing electro-explosive devices (EED). The squadron ordnance officer is responsible for compliance with the Airfield HERO EMCON bill and for development of local EMCON procedures for squadron communications and radar equipment and unit aircraft avionics systems. Handheld, portable, and mobile radios must be included in the HERO EMCON Bill. Technical assistance in preparing a permanent HERO EMCON Bill is available from NSWCDD through instrumented HERO surveys and analyses. For further assistance, contact by message, “DLGR NSWC RADHAZ.fct@navy.mil” "NAVSURFWARCENDIV DAHLGREN VA//B52//" or DSN 249-8594.

15-4.5. FORWARD ARMING AND REFUELING POINTS. Forward arming and refueling points (FARP) can be stationary or mobile in nature. A FARP for fixed-wing aircraft will normally be accommodated at existing airfields; however, operations can be conducted at any location capable of meeting landing and logistical requirements. Rotor-wing aircraft are more versatile in landing and logistical needs and can

be expected to be a part of ground force maneuvering. Quantity distance (Q-D) separations outlined in tables 7-28 and 7-29 are the minimum required for training or contingency operations.

15-4.5.1. All FARPs, in which explosives operations are conducted, must be approved at the appropriate level of command, as outlined below prior to conducting operations.

a. Training evolutions involving FARP operations, conducted on U.S. controlled operational training areas/ranges, to include host nation training areas with formal agreements, approved for the type munitions being used may be approved by the installation/operational commander. When a FARP operation is established at locations other than on approved operational training areas/ranges, formal DWESO site approval or an MRMA is required prior to the conduct of operations. Units conducting FARP operations shall conduct all operations per current Naval Air Training and Operating Procedures, manuals, and conventional weapons loading checklists.

b. The separation distances shown in tables 7-28 and 7-29 are the minimum required to prevent prompt propagation of explosive sites. However, subsequent reactions resulting in death of exposed personnel and substantial damage to assets are possible and expected. Aircraft and equipment will not be usable following such an incident. In order to prevent propagation or reaction between explosives sites, asset preservation distances should be provided as detailed in paragraph 15-3.1.2.

15-4.5.2. Forward Arming Areas.

15-4.5.2.1. Rearm Pads. Rearm pad minimum separation distance is based on rearm, refueling, and aircraft safety requirements and is typically150 feet in accordance with NAVAIR 00-80T-109, Aircraft Refueling NATOPS manual, but no less than K-11 based on each rearm pad's NEW. Each rearm pad is limited to one aircraft resupply of ordnance plus the ordnance on the aircraft.

15-4.5.2.2. FARP Staging Area. The ammunition and explosives staging area can be constructed of earthen barricades/revetments, creating individual cells discussed in paragraph 8-2.4.4, or the ammunition placed on open ground. When cells are not used, K11 aboveground magazine distance must be maintained between stacks. Barricades or revetments also allow the use of the shorter intermagazine separation distances to rearm pads and 100-foot separation distance to fuel storage. The banding on palletized ammunition should be removed only for immediate resupply of rearm pads in order to facilitate a rapid redeployment of the FARP.

15-4.5.2.3. Ordnance Buildup Area. Ordnance buildup and assembly must be conducted at a separate location sited in accordance with tables 7-28 and 7-29. When security or geographic conditions prohibit maintaining individual ordnance staging and buildup areas, the two operations may be conducted at the same location, provided the amount of ammunition at the staging area does not exceed that projected for a 48-hour operation. Excess ammunition must be staged at a separate, designated ordnance staging or storage area, separated by applicable distances defined in tables 7-28 and 7-29.

15-4.5.2.4. Sling-Out Area. FARP sling-out areas must be provided K30 for HC/D 1.1 and applicable PTR distance for non-mass detonating explosives to allow for asset preservation.

15-4.5.3. Forward Refueling.

15-4.5.3.1. Refuel Points. Hot refueling areas must be located at least 100 feet from rearm pads. Refueling procedures are conducted in accordance with the NAVAIR 00-80T-109, Aircraft Refueling NATOPS manual. Deviations from NAVAIR publications, if applicable, must be addressed and

resolved by the Area Commander. Deviations during training must be obtained from NAVAIRSYSCOM.

15-4.5.3.2. Fuel Storage. A distance of 100 feet must be maintained between fuel storage and rearm pads as well as ordnance storage areas. Fuel storage must be diked or placed downhill from ordnance sites.

15-4.5.4. Grounding. Each individual refuel and rearm pad must have an approved ground consisting of a metal rod, 3 to 4 feet long and 0.51 inches in diameter, driven completely into the earth, for aircraft grounding. The ordnance buildup must also use a metal grounding rod as a common ground for all trucks, trailers, or tables used in the buildup or staging process.

15-4.6. STATIC MISSILE BATTERIES. To ensure optimal effectiveness, offensive and defensive missile batteries must be deployed in a static (non-mobile role) in the proximity of other ammunition and explosives operations such as field storage or flight lines. The following criteria apply to deployed static missile batteries and associated support functions.

a. Intermagazine distance will be maintained between missile launchers, reloads, and other ordnance storage locations to include parked ordnance loaded aircraft.

b. Missile batteries deployed within IBD of ammunition storage areas may be sited at K18 distance from manned functions considered related to ammunition operations. Missile batteries deployed in the clear zones of flight line operations may also be sited at K18 distance to manned flight line facilities.

c. Functions solely providing support to static missile units, such as motor pools, may be sited at K18 to batteries and other ammunition activities when the missile battery is located in these areas. For asset preservation, use PTR distance separation.

d. No separation is required between missile batteries and security force structure supporting them.

15-5. PORT OPERATIONS.

In operational areas the loading and offloading of ammunition and explosives will often be required at ports that have not been sited under DoW criteria for explosives handling. In such cases, the following criteria will apply.

a. Separation between piers where explosives are handled will be K11.

b. Separation between explosive piers and piers used for handling non-explosive military cargo will be K18.

c. Separation between an explosive pier and an ammunition holding area will be K11 based on the NEW at the pier.

d. K40 distance will be maintained to other piers not supporting military operations.

15-5.1. EXPLOSIVES ANCHORAGES. The criteria of paragraph 7-10.8. applies with the following exceptions:

a. Separation of the explosives loading or unloading section of the anchorage and the loaded ship section will be K18 intraline distance.

b. An explosives anchorage will be located K40 distance from all piers. When necessary for security reasons, this distance may be reduced to K18 when the piers are only used for DoW operations. PTR will be applied for asset preservation. A separation distance of K40 will be maintained to all non-DoW-related piers.

c. Intraline (K18) separation is permitted between an explosives anchorage and a non- explosives DoW-related anchorage. K40 distance will be maintained between an explosives anchorage and a non-explosives, non-DoW-related anchorage.

15-5.2. EXPLOSIVES FACILITIES.

15-5.2.1. Ammunition and Explosives Holding Areas. Typically ammunition and explosives being held at these locations are only present for a short time to support loading and unloading of ships. The NEW associated with the holding area is based on all ammunition present that is not separated by intermagazine distance.

15-5.2.2. Marshalling Yard. The location of the marshalling yard will typically be governed by the NEW at other PES. When operational necessity dictates, marshalling yards may be separated by K18 intraline distance to any manned explosives operations and K11 intermagazine distance to any unmanned explosives storage operations.

15-5.2.3. Loading Docks. Loading docks must be separated by K11 distance from all explosive sites.

15-6. SURVEILLANCE, INSPECTION AND MINOR MAINTENANCE.

15-6.1. SURVEILLANCE. Surveillance includes inspecting ammunition and explosive areas and observing, inspecting, classifying and/or reclassifying ammunition and explosives. Surveillance is conducted to determine the suitability of material for its intended use or to determine its safety for further or continued storage.

15-6.2. AREA INSPECTION. Ammunition and explosive areas will be inspected frequently by competent personnel for security, safety, cleanliness, and identification of contents. Special consideration should be given to deterioration caused by exposure to the elements in an open storage environment.

15-6.2.1. Security. Normal security conditions require that ammunition and explosive areas are well guarded and properly protected from unauthorized entry.

15-6.2.2. Safety. Inspections will be made to detect exudation or deterioration, unstable stacks of material, and accumulations of trash between or under the stacks.

15-6.2.3. Cleanliness. Ammunition and explosive areas must be clean and free of any unnecessary dunnage and/or combustible material.

15-6.2.4. Identification of Contents. Ammunition and explosives must be properly identified and segregated.

15-6.3. INSPECTION INTERVALS. All ammunition and explosive areas should be inspected each day. If daily inspections are not possible, inspections must be conducted as frequently as possible. In no case will the period between inspections exceed 30 days.

15-6.4. INSPECTION RECORD. The date and hour of each inspection will be noted and recorded in an inspection log over the signature of the person who makes the inspection. Substandard or abnormal conditions will be noted in the log and reported promptly to the supervisor.

15-6.5. MINOR MAINTENANCE. Maintenance or renovation of ammunition performed in operational areas conducted by ammunition/aviation ordnance personnel will normally be limited to minor maintenance. Minor maintenance includes the removal of minor rust, touch up painting, desiccant replacement, repair of boxes, crates and shipping containers, and necessary work required to safely store or ship ammunition. Increased levels of maintenance for ammunition and explosives may be directed by higher authority. Maintenance or renovation of ammunition shall be conducted in accordance with the applicable technical manual.

15-6.6. SURVEILLANCE, INSPECTION, AND MINOR MAINTENANCE REQUIREMENTS. Ammunition and explosives in storage shall be inspected as described in the following paragraphs. Procedures for conducting minor exterior maintenance are contained in the applicable publication under each category of ammunition listed below. Additionally, NAVSUP P-805 provides general requirements and specific sentencing criteria applicable to receipt, segregation, storage, issue and fleet sentencing processes.

a. Small Arms. Small arms ammunition should be inspected to determine that the boxes are properly marked and seals are intact and that the lids or covers are secured. Damaged boxes shall be segregated and repaired, as required, in accordance with TM-9-1305-201-20&P.

b. Gun Ammunition. Gun ammunition includes projectiles, fixed ammunition, and artillery ammunition. Inspections will ensure that projectiles are maintained free of rust and corrosion. Shipping plugs, fusible plugs or fuzes and fuze hole covers will be secured, properly painted and marked. Rounds indicating exudation or leakage of filler shall be segregated and destroyed. Minor maintenance shall be performed in accordance with TM-9-1300-251-20&P.

c. Aircraft Bombs. As soon as practical after aircraft bombs have been transported, they should be inspected for missing, loose, or damaged protective shipping caps. Minor maintenance of general purpose (GP) bombs will be performed in accordance with NAVAIR 11-140-5.

d. Cluster Bombs and Dispensers. Containers must not be opened unless required for inspection, maintenance, or use. Items that have been opened should be marked and issued first so stocks of opened containers may be kept to a minimum. Cluster bombs and associated components will be inspected to determine if any deterioration or damage occurred during storage. Inspection and minor maintenance of cluster bombs and dispensers will be performed in accordance with NAVAIR 11-140-9.

e. Rockets. Rockets should be inspected in accordance with applicable technical manuals. Minor maintenance of rockets will be performed in accordance with NAVAIR 11-140-12.

f. Fuzes, Primers, and Similar Components. Fuzes, primers, detonators, boosters, and similar components should be inspected to ensure that they are properly segregated and enclosed in suitable,

tightly closed containers. Minor maintenance will be performed in accordance with TM 43-0001.28.3 and NAVAIR 11-1F-2.

g. Grenades and Mortars. Grenades and mortars will be inspected for signs of TNT exudation and to verify that all containers are secured and in good condition. Minor maintenance will be performed in accordance with TM-9-1330-200-34, TM-9-1330-200-12, and TM 43-0001-28.3.

h. Pyrotechnics and Chemical Ammunition. Pyrotechnic and chemical ammunition containers must be inspected for evidence of rust, corrosion, and leaks, and to ensure that they are secured and protected against moisture. Special fire extinguishing agents and equipment must be examined to ensure their serviceability. If required, protective equipment will be available and serviceable. Pyrotechnics stored in the open under tarpaulins or other temporary shelters must be inspected frequently for deterioration. If any item is found in an unserviceable condition it will be destroyed as soon as possible. The remaining pyrotechnics of that type will be placed under close surveillance. Minor maintenance will be performed in accordance with TM-9-1370-203-34&P and paragraph 11-8.13.

i. Demolition Materials. Demolition materials will be properly stored, marked and checked for signs of exudation. Minor maintenance will be performed in accordance with TM-9-1375-213-34&P and TM-9-1375-213-12-1.

j. Inert Materials. Inert materials will be inspected periodically to determine serviceability.

k. Cartridge Actuated Devices/Propellant Actuated Devices (CAD/PAD). Inspection and surveillance criteria for the handling, use, and shelf life of CADs/PADs are found in the current revision of NAVAIR 11-100-1.1.

l. Humidity Indicators. Container humidity indicators must be checked with inspection criteria contained in applicable technical manuals.

m. Reprogrammable Assets. Testing and reprogramming procedures of reprogrammable assets are found in the current revision of the applicable technical manual.

15-7. TRANSPORTATION.

Personnel responsible for the transportation of ammunition and explosives in operational areas must be thoroughly familiar with transportation and safety procedures. The provisions of chapter 12 will be strictly observed during transportation except when specifically waived by the GCC or their designated representative. Consideration must be given to the availability, type, and capacity of conveyance; road size and weight limitations; material handling equipment (MHE) and weight handling equipment (WHE) requirements; the qualifications of personnel conducting loading and unloading operations; and the type of material to be handled.

15-7.1. MOTOR VEHICLE SHIPMENT.

15-7.1.1. Vehicle Requirements. Vehicles selected for transporting ammunition and explosives must conform to the requirements of chapter 12. In the event that this is not possible, priority will be given to vehicles which do not present a fire hazard.

15-7.1.2. Placarding. Hazardous materials placards for posting on trucks carrying explosives may be omitted when authorized by competent authority if the tactical situation dictates discretion.

15-7.1.3. Route Selection. Consideration must be given to the availability and features of roads for the transport of ammunition and explosives. Commands will be advised to avoid routes through heavily populated areas or routes that include tunnels. If no practicable alternative routes exist, commands must be advised of steps that can be taken to mitigate the additional hazards due to the transportation of ammunition and explosives. Operators of vehicles carrying ammunition and explosives will possess a route plan.

15-7.2. SECURITY. Accountability and security of sensitive ammunition and explosives during pre-shipping, transportation, and delivery evolutions are subject to the requirements of OPNAVINST 5530.13 (series) for Navy activities and MCO 5530.14 (series) for Marine Corps activities. Sufficient armed guard personnel will be dedicated to ensure adequate security of all ammunition and explosives during the transportation cycle.

15-7.3. COMMUNICATIONS. Personnel involved in the transportation and/or security of ammunition and explosives must be provided with a reliable means of communication. Communication assets required to support each situation will vary, but must be sufficient to permit notification of emergency conditions and meet security requirements.

15-7.4. SAFETY AND SECURITY PRECAUTIONS. The following safety and security precautions apply when transporting ammunition and explosives in operational areas:

a. Vehicles that are back-firing must be stopped and towed from the vicinity of ammunition loading or unloading operations. Engines must be stopped during ammunition loading or unloading operations.

b. The doors of all motor vehicles, or other conveyances containing ammunition or explosives must be secured or guarded continually when outside a restricted area, except when required to be open for inspection, ventilation, or handling of contents. When the doors are open, appropriate security measures considering the security risk category of the ammunition and explosives and current force protection condition will be applied.

c. All doors to motor vehicles containing ammunition or explosives must be closed securely when the motor vehicle is in motion. Fire resistant tarpaulins should be used on open trucks to protect the load from rain and direct sunlight.

d. Vehicles loaded with rockets should be prepositioned with rockets pointed in a safe direction.

15-8. CAPTURED ENEMY AMMUNITION.

15-8.1. PURPOSE. The purpose of this paragraph is to provide basic guidance for commanders involved in Captured Enemy Ammunition (CEA) handling, transportation, and storage operations. The major cause of CEA accidents involves untrained personnel handling foreign ordnance. Contact the nearest Explosives Ordnance Disposal (EOD) unit for additional information on the identification, reporting, and disposition of discovered CEA. Careful planning, risk management, and the use of trained personnel will help mitigate the hazards of CEA operations.

15-8.2. RISK. CEA operations pose a significant threat to operating forces. There are many unknowns associated with CEA, such as net explosives weight (NEW), fuzing mechanisms, markings, and fillers. CEA operations are inherently dangerous; thus, the storage, handling, transportation, and destruction of CEA present a challenge. Operations involving CEA will be assessed using the five-step risk management process to provide maximum protection to personnel and property from an unintentional

detonation. CEA operations should ensure that only the minimum numbers of personnel are exposed to the minimum quantity of CEA for the minimum amount of time.

15-8.3. RETROGRADE OPERATIONS. A cache of CEA retrograded to an ammunition supply point/munitions storage area (ASP/MSA) will be inspected by qualified EOD personnel to ensure the CEA is safe to handle and transport prior to movement and storage. CEA must be stored in a designated secure area within the ASP/MSA, but at a minimum PTR distance from any areas containing U.S. munitions. Regardless of its condition, CEA shall not be intermingled with U.S. munitions stocks. When PTR distance cannot be met, at a minimum CEA must be placed at IM separation distance from DoW stocks and the risk accepted in accordance with CJCSI 4360.01 (series).

15-8.4. RECEIPT, STORAGE, SEGREGATION, AND ISSUE OF CEA.

a. Receipt of CEA. CEA arriving at an ASP/MSA that has not been inspected by EOD must be inspected as soon as possible after receipt to determine its explosives safety condition, type, caliber, and presence of chemical agents. Only trained and certified EOD personnel will perform the inspection of all CEA stocks prior to storage. If EOD personnel are unavailable, Unexploded Ordnance (UXO) qualified/certified civilian personnel meeting the requirements listed in DWESO TP-18 may perform the inspection. However, ASP/MSA personnel will identify these stocks as requiring inspection by EOD personnel. Ammunition technicians should not perform inspections on CEA, as they are not trained in the characteristics of foreign munitions. The inspection of CEA shall take place only at designated sites that meet a minimum of PTRD from all other areas within the storage area. No CEA will be placed into storage without a safety assessment.

b. Storage of CEA. CEA will be stored in a separate area within the ASP/MSA from serviceable and unserviceable DoW munitions. When CEA is placed in storage, protective measures should be taken (e.g., separation distances, use of barricades, fire breaks) to protect DoW serviceable assets. CEA will be stored at PTR distance from DoW munitions. When PTR can't be met, CEA will be stored no closer than IMD. Serviceable and unserviceable CEA will be separated from each other in storage. When space permits, CEA will be stored in multiple small stack quantities. This type of storage is preferred over larger, more volatile stacks.

15-8.5. CEA STORAGE COMPATIBILITY GROUPS. Prior to placing in storage, the CEA will be assessed, if possible to determine its Storage Compatibility Group (SCG). Qualified explosives personnel (i.e., EOD, UXO qualified civilian personnel) will assess the CEA and determine the SCG. Factors used in determining the CEA SCG are caliber or size, filler, fuzing mechanisms, and NEW. Once the SCG has been determined, stocks of CEA will be segregated according to table 3-10. In the event no SCG can be determined, the CEA must be assigned SCG "L".

15-8.6. DETERMINING THE NEW OF CEA. The NEW of CEA will be calculated using a Service publication on foreign munitions or by using the NEW of a similar type and caliber munitions in the DoW inventory. A source for foreign ordnance NEW can be obtained from the local EOD unit, or Naval Surface Warfare Center, Indian Head Division, D Department, Indian Head, MD.

15-8.7. FIRE PREVENTION. The same method used to prevent fires for DoW stocks will be employed in preventing fires for CEA stocks. However, due to the unknown hazard factors associated with CEA, storage areas containing CEA stocks will additionally identify the location of CEA on their fire plan.

15-8.8. SERVICEABLE CEA. Serviceable CEA will be retained for security, intelligence, research, development, test and evaluation, training, demilitarization, or other purposes when authorized by the

headquarters exercising operational control of the discovering unit's operation. CEA used for any of the above operations will be clearly marked as "Serviceable."

15-8.9. UNSERVICEABLE CEA. Unserviceable CEA stored in the same storage magazine, pad, or container as serviceable CEA will be clearly marked as "Unserviceable" and separated (i.e., sandbagged or placed in other barricaded area).

15-8.10. HANDLING. Trained munitions personnel will supervise the handling of all CEA. No CEA will be handled without certification from EOD that the CEA is safe for movement.

15-8.11. CEA ACCOUNTABILITY. CEA will be accounted for as follows:

a. CEA that has been inspected, certified, or cleared by EOD or qualified UXO civilian explosives safety inspectors must be receipted, inspected, and accounted for in the same way as DoW munitions. Once CEA is identified, it is inventoried for accountability and control. Local stock numbers will be assigned to CEA. Assignment of local stock numbers and accurate accountability must be done as soon as possible after receipt. Reporting and disposition instructions for CEA are the same as for DoW munitions.

b. CEA will be accounted for using a method that ensures accountability. A preferred method is using Ordnance Information System (OIS), or NAVMC 10774 cards; however, spreadsheets, logbooks, or any means of tracking is acceptable. The preferred method of accounting for CEA is by the piece; however, accounting for CEA by gross weight is also an acceptable method.

15-8.12. TRANSPORTATION. The following additional requirements pertain to the transportation of CEA:

15-8.12.1. Transporting CEA. CEA must not be transported with DoW ammunition. When possible, CEA should be placed in an unoccupied trailer, and not in the bed of the conveyance. When an armored vehicle is available, it will be used to tow a trailer loaded with CEA to provide additional protection to personnel.

15-8.12.2. Inspections of Loaded Conveyance.

a. Inspection at Origin. Before moving or loading CEA into any conveyance, an EOD or Technical Escort Unit (TEU) team must certify that it is safe to handle and transport. When possible, an ammunition shipping inspector must be consulted about safe loading and tie-down procedures. The EOD or TEU team must provide the driver with any firefighting instructions.

b. Inspection at Destination. Vehicles loaded with CEA must not be taken directly into the ASP. Vehicles arriving with CEA should be directed to a holding area for inspection by EOD or TEU personnel. Following the transport of CEA, any change noted in the condition of the CEA (e.g., the discovery of a missing safety pin, explosives filler exudation, or other unusual conditions) will be reported to EOD personnel for a new assessment prior to removal from the transport vehicle.

c. Blocking and Bracing. Due to the unknown factors associated with CEA, protection against unintentional detonation associated with the stress of movement is critical. CEA loaded into a conveyance must be secured to prevent movement and its impact with other CEA during transport. Packaged CEA will be secured using cargo straps to prevent movement. Tie down procedures will be followed. Unpackaged CEA should be placed into wooden boxes and then secured to the vehicle. When packaging is not available, the bed of the conveyance can be covered with sand to prevent

movement. When using this technique the load must be constantly checked to verify the amount of sand is sufficient to prevent movement and contact with the conveyance. During loading, consideration must be given to protecting exposed fuzes, primers, initiators, and safety devices.

15-8.13. SECURITY. CEA will be controlled and safeguarded in the same manner as that prescribed for DoW munitions of similar hazard classification, SCG, Security Risk Code (SRC), caliber, and type (e.g., SRC Category (CAT) 1-like CEA will be handled as CAT 1 DoW munitions).

15-8.14. DEMILITARIZATION AND DISPOSAL. Only EOD or UXO qualified personnel are authorized to dispose of CEA in non-emergency situations. CEA disposal operations conducted by untrained personnel have the potential to cause unnecessary battlefield contamination, personnel injury, collateral damage, and destruction of items required for intelligence.

THIS PAGE INTENTIONALLY BLANK

APPENDIX A
DEFINITIONS AND ABBREVIATIONS

A

AA&E. Arms, Ammunition and Explosives.

AE. Ammunition and Explosives.

AAR. After Action Report.

AARADCOM. Army Armament Research and Development Command.

Aboveground Magazine. Any open area or any structure not meeting the requirements of an ECM that is used for explosives storage.

Aboveground Storage. Storage in magazines with or without earth cover or in open stacks at surface level. An accidental explosion at the storage site results in blast, fire and projections.

AC. Hydrocyanic Acid.

Ac. Alternating Current.

Accident. Any unplanned act or event which results in damage to property, material, equipment or cargo, or personnel injury or death when not the result of enemy action.

ACGIH. American Conference of Governmental Industrial Hygienists.

Activity. Any Navy or Marine Corps establishment whose mission directly involves or supports the storage, issue and receipt of ammunition, loading/downloading of ammunition on aircraft, or through which ammunition is transferred to, from, or between Naval or commercial ships at CNO-approved berths.

Administration Area. The area in which administrative buildings functioning for the installation as a whole are located. This excludes those offices located near and directly serving components of explosives storage and operating areas.

AEDA. Ammunition, Explosives, and Dangerous Articles.

AEPS. Aircrew Escape Propulsion System.

Aerosol. A suspension of very small particles, either liquid or solid, in air. The particles are so small (less than 10 microns in diameter) that they remain suspended for considerable periods of time instead of settling out. Aerosols are an important form of dissemination for CW agents.

AFFF. Aqueous Film Forming Foam.

AICUZ. Air Installation Compatibility of Use Zone.

Airborne Exposure Limit. The maximum time weighted average airborne concentration (milligram/cubic meter) of a chemical agent to which the Army Surgeon General has established that essentially all members of a specific population can be exposed for a specific period without adverse effect.

Aircrew Escape Propulsion System. This term collectively represents rocket catapults and rocket motors used in aircrew escape propulsion systems.

Al. Aluminum.

All-up Missile. An all-up missile is one with all major components operationally joined, consisting of a warhead (explosive), propellant, guidance system, fuze, etc. An all-up missile may or may not be assembled with less hazardous components such as igniter, wings and fins, tracking flares, etc.

Ammunition. A device charged with explosives, propellants, pyrotechnics, initiating composition or chemical material for use in connection with defense or offense including demolitions, training, ceremonial, or non-operational purposes.

Ammunition and Explosives. As used herein, ammunition and explosives include (but are not necessarily limited to) all items of ammunition; propellants, liquid and solid, high explosives; guided missiles; warheads; devices; pyrotechnics; chemical ammunition; their components, and associated substances, presenting real or potential hazards to life and property.

Ammunition and Explosives Area. An area specifically designated and set aside from other portions of an installation for developing, manufacturing, testing, maintaining, storing or handling of ammunition and explosives.

Ammunition Details. Accessories used in packing, handling, protecting, and inspecting of ammunition such as boxes, tanks, wads, fuze covers, identification tags, and safety clips.

Ammunition Lot. A quantity of ammunition which has been assembled from uniform components under similar conditions and which is expected to function in a uniform manner. Each ammunition lot is assigned a number.

Ammunition Lot Number. The code number that identifies a particular ammunition lot.

Ammunition Storage Unit. All types of explosives storage magazines including outdoor and indoor, open storage areas, sheds, bunkers, and earth-covered and aboveground magazines.

Ammunition Terminal. An activity which has been approved for large quantity ammunition and explosives transfers to and from DON ships (particularly cargo ammunition ships).

AN. Ammonium Nitrate.

Anchorage. See Scuttling Site and Explosives Anchorage.

ANSI. American National Standards Institute.

Anomaly Avoidance. Techniques employed by EOD- or UXO-qualified personnel at sites known or suspected to contain MEC in order to avoid contact with potential surface or subsurface explosive hazards. Anomaly avoidance often will be practiced in support of sampling well installation, surveying,

site reconnaissance, etc. Intrusive anomaly investigation is not authorized during anomaly avoidance operations. Anomaly avoidance is sometimes referred to as UXO avoidance.

AO. Alkylene Oxide.

Approved. Complying with the provisions of this manual, with other instructions, and regulations as issued by the Naval Sea Systems Command (generally), or with regulations of other authorized agencies specifically referred to in this manual.

AP. Antipersonnel; Ammonium Perchlorate.

APZ. Accident Potential Zone.

ARC. Accelerating Rate Calorimetry.

Armed. A fuze is considered armed when any firing stimulus can produce fuze function.

a. A fuze employing explosive train interruption is considered armed when the interrupters position is ineffective in preventing propagation of the explosive train at a rate equal to or exceeding 0.5% at a confidence level of 95%.

b. A fuze employing non-interrupted explosive train is considered armed when the stimulus available for delivery to the initiator equals or exceeds the initiator's maximum no-fire stimulus.

ASN. Assistant Secretary of the Navy.

ASTM. American Society for Testing and Materials.

ASP. Ammunition Supply Point.

ASP/MSA. Ammunition Supply Point/Munitions Storage Area.

ASU. Ammunition Storage Unit.

AT. Antitank.

ATRRS. Army Training Requirements and Resources System.

Authorized Visitor. Personnel conducting project- or mission-related functions that require them to be present in the EZ for a specific purpose and for a limited time.

AUW. Advanced Undersea Weapon.

Auxiliary Building. Any building accessory to or maintained and operated to serve an operating building, line, plant, or pier area. Explosive materials are not present in an auxiliary building. Examples: power plants and change houses, paint and solvent lockers, and similar facilities. An auxiliary building that is not permanently attached, but captive, to one ammunition storage unit or one operating building could be considered a fixture per OPNAVINST 11010.20 (series) and qualify for reduced ESQD.

AWG. American Wire Gage.

AWSE. Armament Weapons Support Equipment.

B

Backup Storage Area. An area, which may be located on or off an installation, used for storing ammunition and explosives that arrive at the port at a time when such material cannot be handled for a considerable period of time at the pier or wharf. It provides storage space for a reserve of explosives and ammunition to sustain operations at the pier or wharf when shipments to or from the port are behind schedule.

Bag Ammunition. Gun ammunition in which the ignition charge and the propelling charge are contained in a laced bag made of powder bag cloth, and this unit and the projectile and primer are loaded separately into the gun.

BAR. Barricade.

Barge Unit. Ship or Barge Units.

Barricade. An intervening barrier, natural or artificial, of type, size, and construction intended to limit the effect of an explosion on nearby buildings or exposures.

Barricaded. The condition wherein an effective barricade exists between magazines, operating buildings, stacks, or other buildings opposed one to another.

Barricaded Siding. A dead-end railroad or highway spur that is barricaded from adjacent sidings or buildings. It is used for the temporary storage of ammunition and explosives-loaded trucks or railcars.

BASEEFA. British Approvals Service for Electrical Equipment in Flammable Atmospheres.

BATF. Bureau of Alcohol, Tobacco and Firearms.

BI. Bullet Impact.

Binary Munitions. Ammunition which contains two or more chemicals that remain separated until use. The ammunition is not lethal or explosive until mixed on demand or by shock (setback or impact).

Blank Ammunition. Ammunition that consists of a cartridge case with primer and powder charge but which does not contain a projectile. Blank ammunition is used for simulated fire, for signaling, and for training exercises.

BL&P. Blind Loaded and Plugged.

Blast Impulse. The product of the overpressure from the blast wave of an explosion and the time during which it acts at a given point (that is, the area under the positive phase of the overpressure versus time curve).

Blast Overpressure. The pressure, exceeding the ambient pressure, manifested in the shock wave of an explosion.

Blasting Cap. Blasting caps are classified in accordance with the method of initiation. There are two types of blasting caps:

a. Non-electric (fuse) cap. An open-ended metal shell contains pressed charges of primary and secondary (detonating) explosives. To assemble the cap with the next part of the explosive train, a black powder fuse, or detonating cord, is inserted carefully into the open end against the initiating charge and crimped in place.

b. Electric cap. A sealed metal or plastic shell contains the detonating charge, and an electric firing element. Electric caps may be of the instantaneous or time-delay type.

BL&T. Blind Loaded with Tracer.

BLAHA. Basic Load Ammunition Handling Areas.

Bomb-Type Ammunition. Ammunition that is characterized by a large high-explosive charge-to-weight ratio such as aircraft bombs, warheads, guided missiles, depth charges, and mines that are designed for dropping, launching, or planting. This type of ammunition depends on the destructive blast effect of the explosive at or near the target rather than the penetrative effect of the explosive container.

Booster Explosive. An explosive material with sensitivity intermediate between that of a primary explosive and a main-charge explosive. It is used to transmit and augment the detonation reaction (initiated by the primary explosive) with sufficient energy to reliably initiate a stable detonation reaction in the main-charge. Examples of booster explosives are CH-6, Tetryl and PBXN-5.

BOS-I. Base Operating Support Integrator.

BRAC. Base Realignment and Closure.

Bravo Flag. A red flag that flies at a facility when explosives and personnel are present.

Breakdown. The separation of a complete round of ammunition or subassembly into its components or separate parts; the removal of one or more components from a round.

Bridge. The electrically resistive wire (originally a bridge-wire) in which the electrical energy is converted to heat in an electro-explosive device. Elements of other forms than wire, such as films, foil, ribbons, etc., are used and referred to as bridges of such devices.

Brisance. The shattering power of an explosive. Brisance is the measure of the kind of work an explosive will do and is usually dependent upon and indicated by the velocity of the explosive reaction.

BUMED. Bureau of Medicine and Surgery.

Burning. A chemical reaction in which the output of heat is sufficient to enable the reaction to proceed and be accelerated without input of heat from another source. Burning is a surface phenomenon with the reaction products flowing away from the unreacted material along the surface at subsonic velocity. Confinement of the reaction increases pressure, rate of reaction and temperature, and may cause transition into deflagration. If burning occurs within a munition, this is the least violent type of explosive event. The energetic material-ignites and burns, non-propulsively. The case may open, melt or weaken sufficiently to rupture nonviolently, allowing mild release of combustion gases. Debris stays mainly within the area of the fire. This debris is not expected to cause fatal wounds to personnel or be a hazardous fragment beyond 15 m.

Burning Area. The site at which ammunition and explosives are disposed of by burning.

BZ. Bromobenzyl.

C

ºC. Degrees Celsius.

C&RI. Consequence and Risk Identification.

CA. Chemical Agent.

CAD. Cartridge Actuated Device.

CALA. Combat Aircraft Loading Area.

Canister Launchers. Some varieties of surface-to-surface missiles are received, handled, and stowed shipboard in a ready-to-fire condition within individual cylindrical canisters. The canisters are secured in clusters to fixed launcher structures that are oriented to the predetermined firing angles. Each canister has fire-through end closures and is connected to the shipboard firing system through umbilical connectors.

Cargo Ammunition Ships. The following vessels, when carrying ammunition and explosives as cargo, are cargo ammunition ships:

a. Fleet cargo ammunition ships (T-AOE, T-AKE, and AS class and maritime prepositioned ships).

b. Tenders (AD and AS classes).

c. Military Sealift Command chartered ships.

d. Any ship entering a DON controlled port.

e. Any DON controlled ship regardless of location.

f. Lighters and barges.

Carrier, common (commercial). A company engaged in the business of transporting persons or property for compensation and for all persons impartially.

Cartridge. A complete round of ammunition in which the primer, propelling charge and projectile or bullet are completely assembled to the cartridge case as fixed ammunition; or the primer and the propelling charge are assembled in the cartridge case and closed by a friable plug.

Cartridge Actuated Device. This term collectively represents and is synonymous with cartridges, cartridge actuated devices (old meaning), aircraft detonating cords and cartridge associated hardware. Cartridge actuated devices are explosive-loaded devices designed to act as a gas generator, or to provide a stroking action or a special purpose action. Actuated devices may be reusable, employing an expendable cartridge for each design action or may be a sealed unit with a one-time function capability. The amount of explosive contained in these devices is normally small.

Cast Propellant. A solid propellant charge produced from a quantity of casting powder or composite propellant and configured into a grain so as to possess certain desired burning characteristics.

Castable. A term signifying an explosive (such as TNT) with a melting point low enough, compared to that at which significant decomposition occurs, that is safe and practical to melt and cast into a casting fixture. A term also signifying an explosive (e.g., PBX-100 series) of sufficiently low viscosity (usually less than 15 kilopoise) to transport from the mixing vessel to a casting fixture with a reasonably low driving force (usually less than 30 psig).

Casting House. A building in which explosives are cast into warhead housing, mold, etc.

Casting Powder. A granular mixture of colloidized nitrocellulose (single-base) or nitrocellulose and nitroglycerine (double-base) used in ammunition propelling charges.

CAT. Category.

CATM. Captive Air Training Missile.

Cavern Storage Site. A natural cavern or former mining excavation adapted for the storage of ammunition and explosives.

CB. Certification Board.

CBT. Computer-Based Training.

CBU. Cluster Bomb Unit. See Cluster Bomb/Dispenser Unit Military Munitions.

CCB. Configuration Control Board.

CCI. Controlled Cryptographic Items.

CCLI. Commerce Control List Item.

CCTV. Closed Circuit Television.

CE. Civil engineer.

CE. Conditional Exemption.

CEA. Captured Enemy Ammunition.

CERCLA. Comprehensive Environmental Response, Compensation, and Liability Act.

Ceiling Value. The concentration of a chemical that must not be exceeded for any period of time.

Certification (Personnel). A formal, documented declaration that an individual, by virtue of management review, has met all of the qualification requirements established to perform a task.

Certification of MPPEH. Signed documentation that declares the explosives safety status of MPPEH.

CETASM. Canine Explosive Training Aid Storage Magazine.

CFA. Cognizant Field Activity.

CFR. Code of Federal Regulations.

CG. Phosgene.

Chain of Custody. The activities and procedures taken throughout the inspection, re-inspection and documentation process to maintain positive control of MPPEH to ensure the veracity of the process used to determine the status of material as to its explosive hazard. This includes all such activities from the time of collection through final disposition.

Change House. A building provided with facilities for employees to change to and from work clothes. Such building may be provided with sanitary facilities, drinking fountains, lockers and eating facilities.

Charge. The quantity of explosive used in a munition or component thereof. The charge is usually confined by a case, but when no confinement is used, it is usually called a bare charge.

Chemical Agent. A chemical compound (to include experimental compounds) that, through its chemical properties produces lethal or other damaging effects on human beings, is intended for use in military operations to kill, seriously injure, or incapacitate persons through its physiological effects. Excluded are RDT&E solutions; riot control agents; chemical defoliants and herbicides; smoke and other obscuration materials; flame and incendiary materials; and industrial chemicals.

Chemical Ammunition. Ammunition containing a chemical filler that produces a toxic or irritating effect upon the body, a screening or signal smoke, or an incendiary or flame action.

Chemical Decontamination. The process of making any contaminated object, person, or area safe for unprotected personnel by chemically destroying, physically removing, sealing in, or otherwise making harmless the chemical agent on or around it. (In general, only areas or material contaminated by agents which have a long duration of effectiveness need be decontaminated, since agents with a short duration of effectiveness are quickly evaporated.)

CJCSI. Chairman of the Joint Chiefs of Staff Instruction.

CK. Cyanogen Chloride.

CL. Chlorine.

Classification Yard. A railroad yard used for receiving, dispatching, classifying and switching railcars.

Classroom Training. Training conducted in a classroom environment using only inert ammunition.

Cluster Bomb/Dispenser Unit Military Munitions. CBU weapons are designed to carry and dispense sub-munitions. See also Sensitivity Group.

CMC. Commandant, Marine Corps.

CN. Chloroacetophenone.

CNB/CNS. Liquid Lachrymator.

CNG. Compressed Natural Gas.

CNO. Chief of Naval Operations.

CO2. Carbon Dioxide.

COE. Center of Excellence.

Cold Iron. The status of a ship that has shut down its main power plant and is dependent on shore power. A ship in cold iron is not capable of providing immediate propulsion.

Combat Aircraft Loading/Parking Area. Any area specifically designated for:

a. Aircraft loading or unloading of combat configured munitions.

b. Parking aircraft loaded with combat configured munitions.

Combatants. All DON controlled ships not classified as explosives support ships, i.e., all ships which do not carry cargo ammunition.

Combustible Construction. Not complying with definition for noncombustible (that is, wood structure, surface).

COMLANTFLT. Commander, US Atlantic Fleet Command.

Commanding Officer or Officer-in-Charge. The title of the senior officer who has overall responsibility for operations at Navy and Marine Corps activities. For purposes of this manual, Commanding Generals, Installation Commanders, Officers-in-Charge, and Activity Commanders are synonymous with commanding officer.

COMMARCORPSYSCOM. Commander, Marine Corps Systems Command.

COMPACFLT. Commander, US Pacific Fleet Command.

Compatibility. Ammunition or explosives are considered compatible if they may be stored or transported together without significantly increasing either the probability of an accident or, for a given quantity, the magnitude of the effects of such an accident.

Complete Round. A term applied to an assemblage of explosive and nonexplosive components designed to perform a specific function at the time and under the conditions desired.

Component. Any part of a complete round whether loaded with explosives or inert material, or empty.

Compressed Gas. Any material or mixture having in its container either an absolute pressure exceeding 40 psi at 70° F, or an absolute pressure exceeding 140 psi at 130° F, or both; or any liquid flammable material having a Reid vapor pressure exceeding 40 psi absolute at 100° F. Such materials are classified as flammable compressed gases if a mixture of 13% or less (by volume) with air forms a flammable mixture or if the flammability range with air is greater than 12% regardless of the lower limit.

COMUSNAVCENT. Commander, US Naval Forces Central Command.

COMUSNAVEUR. Commander, US Naval Forces Europe Command.

Conditional Exemption. An exemption from the regulatory definition of hazardous waste (and therefore from compliance with specific environmental requirements pertaining to the storage of hazardous waste) conditioned on compliance with certain criteria requirements as set forth in 40 CFR 266.205.

Construction Support. Assistance provided by EOD- or UXO-qualified personnel during intrusive construction activities on real property known or suspected to contain MEC to ensure the safety of personnel or resources from any potential explosive hazards. The two categories of construction support are on-call and on-site.

Container. A general term that encompasses boxes; cartridge or powder tanks, cartons, drums, barrels, cylinders or cans; containers for long ordnance items; and cargo containers (Dromedaries, etc.) for shipments of sizeable quantities of hazardous materials. A pallet is not considered to be a container.

Controlled By The Armed Forces Of The United States. Handled, stored, or shipped by, for or to the Armed Forces of the United States.

CONUS. Within the continental United States.

Cook-Off. Any reaction of ammunition caused by the absorption of heat from its environment. In loaded guns it consists of the accidental and spontaneous discharge of, or explosion in, the gun caused by an overheated chamber or barrel igniting a fuze, propellant charge, or bursting charge. Cook-off may also occur in explosive-loaded components when they are exposed to excessive heat or flame wash from any source, such as live steam, fire, rocket or gas turbine exhaust.

CPIA. Chemical Propulsion Information Agency.

CS. O-Chlorobenzalmalonitrile.

CSA. Canadian Standards Association.

CW. Chemical Warfare.

D

DA. Diphenylchloroarsine.

DAC. Defense Ammunition Center.

DASN. Deputy Assistant Secretary of the Navy.

DBX. Depth Bomb Explosive.

DDA. Designated Disposition Authority.

DDT. Deflagration-to-Detonation Transition.

DDESB. Department of Defense Explosives Safety Board, now known as the Department of War Explosives Safety Office (DWESO).

DDNP. Diazodinitrophenol.

DEFCON. Defense Condition.

Defense Sites. Locations that are or were owned by, leased to, or otherwise possessed or used by the DoD. The term does not include any operational range, operating storage or manufacturing facility, or facility that is used for or was permitted for the treatment or disposal of military munitions. (10 United States Code [U.S.C] §2710(e)(1))

Deflagration. A rapid chemical reaction in which the output of heat is sufficient to enable the reaction to proceed and be accelerated without input of heat from another source. Deflagration is a surface phenomenon with the reaction products flowing away from the unreacted material along the surface at subsonic velocity. The effect of a true deflagration under confinement is an explosion. Confinement of the reaction increases pressure, rate of reaction and temperature, and may cause transition into a detonation. If deflagration occurs within a munition, ignition and deflagration of the confined energetic materials leads to nonviolent pressure release as a result of a low strength case or venting through case closures (loading port/fuze wells, etc.). The case might rupture but does not fragment; closure covers might be expelled, and unburned or burning energetic material might be thrown about and spread the fire. Propulsion might launch an unsecured test item, causing an additional hazard. No blast or significant fragmentation damage to the surroundings; only heat and smoke damage from the burning energetic material.

Delay. A delay is an explosive train component which introduces a controlled time delay in the functioning of the train.

Demilitarization. The act of destroying the military offensive or defensive advantages inherent in certain types of equipment or material. The term includes mutilation, dumping at sea, cutting, crushing, scrapping, melting, burning or altering; designed to prevent the further use of this equipment and material for its originally intended military or lethal purpose. The term applies equally to material in unserviceable or serviceable condition – that has been screened through the Inventory Control Point (ICP) and declared surplus or foreign excess.

Demolition Area. An area specifically designated and reserved for destroying explosives and explosive-loaded devices.

Demolition Material. Explosives and accessories used for blasting, eliminating hazards to navigation and obstacles to amphibious landing, or for destroying equipment.

Department of Transportation (DOT) Regulations. Latest issue of regulations issued by the DOT for the transportation of ammunition, explosives, and other hazardous materials.

DERP. Department of Defense Environmental Restoration Program.

Designated Aircraft Parking Area. An aircraft parking area that meets airfield parking criteria.

DESR. Defense Explosives Safety Regulation.

Detonation. A violent chemical reaction within a chemical compound or mechanical mixture evolving heat and pressure. A detonation is a reaction which proceeds through the reacted material toward the unreacted material at a supersonic velocity (by a shock wave process). The result of the chemical reaction is exertion of extremely high pressures on the surrounding medium forming a propagating shock wave which is originally of supersonic velocity. This is the most violent type of explosive event, whether occurring within a munition or in bulk material. A supersonic decomposition reaction propagates through the energetic material to produce an intense shock in the surrounding medium, air or water for example, and very rapid plastic deformation of metallic cases, followed by extensive

fragmentation. All energetic material will be consumed. The effects will include large ground craters for munitions on or close to the ground, holing/plastic flow damage/fragmentation of adjacent metal plates, and blast overpressure damage to nearby structures.

Detonator. A detonator is a high explosive device which, when properly used, will reliably initiate other high explosives in an explosive train by detonating wave or shock-front action. It may be electrically, mechanically (e.g., percussion or stab) or thermally (e.g., friction) initiated. A blasting cap is one type of commercial detonator.

Deviation. A departure from an established rule or standard. For explosives safety applications, a deviation authorized by the CNO or CMC is considered to be a departure from DON/DoW criteria, but under strictly controlled and regulated conditions based upon compelling operational need. Deviations which may be authorized by appropriate authority within the naval service are event waivers, waivers, and exemptions.

Dilute Explosive Material. Evenly dispersed mixtures (for example, solution, suspension, colloid, or gel) of explosive materials (HC/D 1.1 or 1.3 materials such as RDX, HMX, TNT, nitroglycerin, propellants, explosives, or pyrotechnics) and non-explosive and/or non-hazardous materials (for example, water, solvent, soil, gas, or polymer) that do not exhibit explosive characteristics (materials that are not hazard classified as HC/D 1.1 or 1.3).

DIRSSP. Director, Strategic Systems Program.

Discarded Military Munitions. Military munitions that have been abandoned without proper disposal or removed from storage in a military magazine or other storage area for the purpose of disposal. The term does not include unexploded ordnance, military munitions that are being held for future use or planned disposal, or military munitions that have been properly disposed of, consistent with applicable environmental laws and regulations. (10 U.S.C. 2710(e)(2))

Disposal. End of life tasks or actions for residual materials resulting from demilitarization or disposition operations.

Disposition. The process of reusing, recycling, converting, redistributing, transferring, donating, selling, demilitarizing, treating, destroying, or fulfilling other life-cycle guidance, for DoW property.

Dividing Wall. A wall designed to prevent, control or delay propagation of an explosion between quantities of explosives on opposite sides of the wall.

DLA. Defense Logistics Agency.

DM. Diphenylaminechloroarsine.

DMM. Discarded Military Munitions.

DMWR. Depot Maintenance Work Requests.

DNT. Dinitrotoluene.

Dock. An artificial basin or natural waterway, including the piers enclosing the basin, in which vessels may remain afloat when berthed at a pier or wharf.

DoD. Department of Defense (also known as the Department of War).

DoD Component. Any one of the Military Departments and Agencies comprising the Department of Defense.

DoDI. Department of Defense Instruction.

DoW Operations/Storage. Explosives operations conducted by DoW or another federal agency, or contractor under DoW oversight, procedure, or control and in accordance with the explosives safety standards of Defense Explosives Safety Regulation (DESR) 6055.09. This term is applicable only to DoW and federal explosives operations, and to non-DoW commercial enterprises directly supporting such operations under contract, including cases where the actions of a single crew and/or operating line produces material procurable by either DoW or a non-DoW entity or where ownership of the product changes during process.

DOE. Department of Energy.

Dolphin. A mooring post or posts on a wharf or quay.

DON. Department of the Navy.

DOT. Department of Transportation.

DOT Class. A category of materials classified by DOT based on the character and predominance of the associated hazards and of the potential for causing personnel casualties or property damage. The hazard classes are Explosives A, B, and C; Blasting Agent; Flammable Liquid; Flammable Solid; Combustible Liquid; Flammable Gas; Nonflammable Gas; Oxidizer; Organic Peroxide; Corrosive Material; Poisons A and B; Irritating Material; Radioactive Material; Etiological Agent; ORM-A, ORM-B, ORM-C and ORM-D. Refer to Bureau of Explosives Tariff No. BOE-6000, 49 CFR 173 for definitions.

Double-Base Powder. A casting powder whose principal explosive ingredients are nitroglycerine and nitrocellulose.

DOW. Department of War (also known as the Department of Defense).

DPRM. Direct Reporting Program Manager.

Drill Ammunition. Inert ammunition which may have working mechanisms or cut-aways and is used for training.

DRMO. Defense Reutilization Marketing Office, currently DLA Disposition Service.

DSC. Differential Scanning Calorimetry.

DSN. Defense Switch Network.

DTA. Differential Thermal Analysis.

DTR. Defense Transportation Regulation.

DTTS. Defense Transportation Tracking System.

Dud. Explosive munition which is not armed as intended or which has failed to function after being armed.

DUSD (ES). Deputy Under-Secretary of Defense (Environmental Security).

DWESO. Department of War Explosives Safety Office (formerly known as the Department of Defense Explosives Safety Board (DDESB)).

E

EAF. Expeditionary Airfield.

Earth-Covered Magazine. Any earth-covered structure that meets soil cover depth and slope requirements of paragraph 8-2.5. ECMs have three possible structural strength designations (7-Bar, 3-Bar, or undefined). The strength of an ECM's headwall and door(s) determines its designation.

ECM. Earth-Covered Magazine.

ECP. Engineering Change Proposal.

EED. Electroexplosive Device.

EER. Explosive Event Report.

EES. Enterprise Explosives Safety.

EGND. Ethylene glycol dinitrate.

EHW. Explosive Hazardous Waste.

EIS. Extremely Insensitive Substance.

ELCG. Energetic Liquid Compatibility Group.

Electric Blasting Cap. An electric detonator intended for initiation of dynamite Primacord, etc., in commercial blasting and military demolition and blasting operations. Used to initiate detonations in some experimental work.

Electric Primer. An electro-explosive device designed to initiate burning or deflagration of pyrotechnic, propellant, or explosive. Some detonators have been designed as primers (e.g., Primer Mk 124).

Electrical Interrogation. The part of weapons checkout involving electrically interfacing with the weapon, ordnance, or energetic component for the purpose of diagnosing, programming, surveilling, testing, or assessing the health, status, compliance, or readiness of the item under test. Power application non-launch activities and proximity testing may be considered electrical interrogation depending on the specific operational context.

Electroexplosive Device. Any explosive device such as a blasting cap, squib, explosive switch, or igniter which is designed to be initiated by an electric current.

Electromagnetic Radiation. Electromagnetic waves, principally in that part of the spectrum referred to as "radio frequency" generated for purposes of radio and television communication, remote control, telemetering, and radar detection and observation at power levels sufficient to constitute a hazard to EEDs.

Electrostatic Discharge. The discharge of the electrostatic charge which accumulates on ungrounded surfaces (including those of human bodies, vapor droplets and dust particles). Such discharges can be transmitted across air gaps as sparks, which can initiate reactions of explosive vapors, dust, and finely divided explosives. They can also initiate an electro-explosive device in its normal mode, if transmitted through the bridge or by dialectric breakdown between the bridge system and the case.

EMCON. Emission Control.

Empty Ammunition. An ammunition item or component that does not contain explosive material or inert material. Empty ammunition items and components include:

a. Ammunition items or components that were manufactured empty or without the components that contain the explosive material.

b. Ammunition items or components that have had their explosive material completely removed by disassembly, firing, thermal treatment or other means.

Energetic Liquid. A liquid, slurry, or gel, consisting of or containing an explosive, oxidizer, fuel, or combination of the above, that may undergo, contribute to, or cause rapid exothermic decomposition, deflagration, or detonation.

Enduring Locations. Locations listed in DoD Enduring Location Master List (S), where military munitions are present or forecasted to be present.

Energetic Material. See Hazardous Material.

Engineering Controls. Regulation of facility operations through the use of prudent engineering principles; e.g., facility design, operational sequencing, equipment selection and process limitations.

EO. Ethylene Oxide.

EOD. Explosive Ordnance Disposal.

EPA. Environmental Protection Agency.

EPCRA. Emergency Planning Community Right-to-Know Act.

ERDA. Energy Research and Development Administration.

ES. Exposed Site.

ESAAC. Expended Small Arms and Ammunition Casings.

ESC. Explosives Safety Coordinator.

ESD. Electrostatic Discharge.

ESI. Explosives Safety Inspection.

ESMP. Explosives Safety Management Program.

ESMRM. Explosives Safety and Munitions Risk Management.

ESO. Explosives Safety Officer.

ESQD. Explosives Safety Quantity-Distance.

ESS. Explosives Safety Submission.

ESSA. Explosives Safety Self-Assessment.

Essential Personnel. Personnel whose duties require them to remain within an ESQD arc for one or more of the following reasons:

a. To safely and effectively complete a specific explosives operation (e.g., handlers, riggers, crane operators, vehicle operators, safety observers).

b. In-port duties or services on a pier or wharf which does not interfere with explosives operations and if not performed would prevent the safe or normal operation of a vessel.

c. Responding to an emergency situation (e.g., fire department, security/police, medical services, public works department).

Established Explosives Safety Program. An explosives safety program at an activity, command, or location that has an assigned explosives safety officer and is evaluated by the Navy or Marine Corps Explosives Safety Inspection program.

Establishment. Any plant, works, facility, installation or other activity.

Event Waiver. A deviation approved on a case by case basis for a particular evolution, issued for a limited period to meet a specific, non-recurring readiness or operational requirement which cannot otherwise be satisfied.

Exclusion Zone. An ESQD arc established around a munitions response work area where MEC procedures are being conducted. An EZ is created by a response operation that may move within defined boundaries, can be suspended, and will be cancelled upon project completion.

Exemption. A deviation from mandatory explosives safety requirements approved for the purpose of long-term satisfaction of recurring readiness or operational requirements. Except in certain cases where authorization to purchase real estate for sufficient ESQD clearances has not been granted, where it is in the best interest of the U.S. to grant agricultural leases of encumbered land, or where a significant impairment of the defense posture of the U.S. would result, a positive program for eventual correction of the deficiency must be planned and in the process of being carried out. Exemptions are generally issued for a maximum of 5 years, but will not be granted for a period in excess of that estimated for correction of the deficiency.

Exercise Ammunition. See Practice Ammunition.

Exploding Bridgewire. A term used to describe an electro-explosive device (usually a detonator) of which the most sensitive explosive is too insensitive to be initiated, except when the bridge-wire is caused to explode by a discharge of sufficient energy and power to raise its temperature above its vapor point before it has time to expand significantly.

Explosion. A violent chemical reaction within a chemical compound or mixture or mechanical mixture evolving heat and pressure. An explosion is a reaction that proceeds through the reacted material toward the unreacted material at sonic velocity (by a shock wave process). The result of the chemical reaction is exertion of high pressure on the surrounding medium, forming a propagating shock wave. Ignition and rapid reaction of the confined energetic material builds up high local pressures leading to violent pressure rupturing of the confining structure. Metal cases are fragmented (brittle fracture) into large pieces that are often thrown long distances. Unreacted and/or burning energetic material is also thrown about. Fire and smoke hazards will exist. Air shocks are produced that can cause damage to nearby structures. The blast and high velocity fragments can cause minor ground craters and damage (breakup, tearing, gouging) to adjacent metal plates. Blast pressures are lower than for a detonation.

Explosion Hazard. The hazard resulting from the tendency of certain materials to detonate en masse or burn with violence, causing destruction and damage or propagating explosions from one explosive site to another by blast wave or flying fragments.

Explosion Proof. When used in connection with electrical equipment, indicates that such equipment is enclosed in a case which is capable of withstanding an internal burning or explosion of elements contained inside the case and preventing ignition by spark, flash, or explosion of any outside gas or vapor surrounding the enclosure.

Explosive Accident. See Explosive Mishap.

Explosive (or Explosive Substances). A substance, or mixture of substances, which is capable, by chemical reaction, of producing gas at such a temperature, pressure and rate as to be capable of causing damage to the surroundings. This general term “explosive” thus includes all solid and liquid materials variously known as high-explosives, propellants and pyrotechnics. Fuel-air explosives and explosives composed of liquid fuels and oxidants are included, when included in munitions, even though the individual components may not be explosive. Included are pyrotechnic substances, even though some may not produce reaction gases.

Explosive Equivalent. The amount of a standard explosive which, when detonated, will produce a blast effect comparable to that which results at the same distance from the detonation or explosion of a given amount of the material for which performance is being evaluated. It is usually expressed as a percentage of the total net weight of all reactive materials contained in the item or system. For the purpose of this manual, TNT is used for comparison.

Explosive Hazardous Waste. Includes hazard class/division 1.1, 1.2, or 1.3 WMM and other munitions manufacturing, processing, or miscellaneous wastes presenting an explosive hazard as outlined in 40 CFR 261.23.

Explosive Incident. See Explosive Mishap.

Explosive Limit. The maximum quantity of explosives or ammunition permitted in a magazine, production building, or other specified site. Explosive limits are based on quantity-distance damage considerations and are expressed in net pounds of explosive, number of rounds or units, or other measuring units. Also called Explosive Quantity.

Explosive Material. Any chemical material with hazard producing characteristics that is loaded into ammunition and/or ammunition components. This includes (but is not limited to) explosives, propellants, white phosphorous, incendiary mixtures, pyrotechnic mixtures, tracer mix, toxic materials, and riot control agents.

Explosive Mishap. Includes all of the following occurrences, near-occurrences and/or circumstances:

a. Chemical Agent Accident. Any occurrence involving a chemical agent which, in the opinion of a medically trained authority, did result in a disabling injury or, did or will result in $10,000 or more damage to property from contamination.

b. Dangerous Defect. A defect, found upon visual examination or local test, in an explosive material/system which is capable of resulting in an explosive mishap (i.e., ruptures of explosive containers exposing filler, protruding primers, partially armed fuzes, safety devices missing or defective, etc.).

c. Explosive Accident. An unplanned explosion or fire involving an explosive material/system. This includes inadvertent actuation, jettisoning, release or launching thereof resulting in a fatality or injury to personnel, fire, explosion or damage to property.

d. Explosive Incident. An occurrence which creates a potentially hazardous situation. Incidents include, but are not necessarily limited to:

(1) Human errors in processing, assembly, testing, loading, storing, transporting, handling, using or disposing of an explosive material/system.

(2) Unusual or unexpected occurrences, unnatural phenomena unfavorable environments or instances of equipment failure which may damage or affect safety or reliability of an explosive material/system.

(3) Loss or abandonment of an explosive material/system resulting in a potential hazard to untrained personnel who may find the item.

(4) Misused or unauthorized alteration of an explosive material/system.

(5) Any failure or malfunction of, or damage to, a launch device or associated hardware which occurs when an explosive material/system is being handled or otherwise manipulated.

e. Explosive Near-Mishap. Any event which, except for chance, would have been an explosive mishap.

f. Malfunction. The term applied to an explosive material/system when it fails to function in the manner for which designed. Malfunctions are considered major or minor as follows:

(1) Major Malfunction. Failure to function in the manner for which designed, resulting in, or potentially capable of resulting in, personal injury and/or material damage.

(2) Minor Malfunction. Failure to function in the manner for which designed and does not result in injury or material damage and for which the potential for injury or material damage is remote (duds, downrange prematures, etc.).

Explosive Near-Mishap. See Explosive Mishap.

Explosive Operation. Any action to be performed on or to ammunition and explosives that involves handling or interacting with an explosive in any amount. Examples of explosive operations which might be conducted under the scope of this document include the following: synthesis, manufacturing, testing, assembly, disassembly, maintenance, renovation, weapons loading/unloading of aircraft and ships, and demilitarization.

Explosive Ordnance Disposal. The detection, identification, on-site evaluation, rendering safe, recovery, and final disposal of unexploded ordnance and of other munitions that have become an imposing danger, for example, by damage or deterioration.

Explosive Ordnance Disposal (EOD) Personnel. Military personnel who have graduated from the Naval School, Explosive Ordnance Disposal; are assigned to a military unit with a Service-defined EOD mission; and meet Service and assigned unit requirements to perform EOD duties. EOD personnel have received specialized training to address explosive and certain CA hazards during both peacetime and wartime. EOD personnel are trained and equipped to perform Render Safe Procedures (RSP) on nuclear, biological, chemical, and conventional munitions, and on improvised explosive devices.

Explosive Ordnance Production Hazard Level. Hazard severity categories are defined to provide a qualitative measure of the worst potential consequences resulting from personnel error, environmental conditions, design inadequacies, procedural deficiencies, system, subsystem or component failure or malfunction as follows:

a. Category I, Catastrophic. May cause death or system loss.

b. Category II, Critical. May cause severe injury, severe occupational illness, or major system damage.

c. Category III, Marginal. May cause minor injury, minor occupational illness, or minor system damage.

d. Category IV, Negligible. Will not result in injury, occupational illness, or system damage.

These hazard severity categories provide guidance to a wide variety of programs. However, adaptation to a particular program may be required. This adaptation may include definite transition points between categories and further definition of the degree of injury or damage.

Explosive Quantity. See Explosive Limit.

Explosives. The term "explosive" or "explosives" includes any chemical compound or mechanical mixture which, when subjected to heat, impact, friction, detonation or other suitable initiation, undergoes a very rapid chemical change with the evolution of large volumes of high highly heated gases which exert pressures in the surrounding medium. The term applies to high explosives, propellants and pyrotechnics that either detonate, deflagrate, burn vigorously, generate heat, light, smoke, or sound. Also see High Explosive, and Initiating Explosive.

Explosives Anchorage. An area of water specifically designated for loading and unloading vessels and for anchoring vessels carrying a cargo of ammunition and explosives.

Explosives Area. Any area of a shore establishment in which explosives or ammunition are manufactured, stored, processed, or otherwise handled.

Explosives (or Munitions) Emergency Response. An immediate response by explosives and munitions emergency response personnel to control, mitigate, or eliminate the actual or potential threat encountered during an explosives or munitions emergency. An explosives or munitions emergency response may include in-place render-safe procedures, treatment or destruction of the explosives or munitions or their transport to another location to be rendered safe, treated, or destroyed. Reasonable delay in the completion of an explosives or munitions emergency response, which a necessary, unforeseen or uncontrollable circumstance causes, does not terminate the explosives or munitions emergency. Explosives and munitions emergency responses can occur on either public or private lands and are not limited to responses at Resources Conservation and Recovery Act (RCRA) facilities. (40 Code of Federal Regulations [CFR] §260.10)

Explosives Facility. Any structure or location containing ammunition and explosives. See also Operating Building.

Explosives Safety. The summation of all actions conducted at DON activities, ashore, and afloat, designed to manage and control the risks and hazards inherent with ammunition and explosives operations. Explosives safety is the process used to prevent premature unintentional or unauthorized initiation of explosives and devices containing explosives; and with minimizing the effects of explosions, combustion, toxicity, and any other deleterious effects. Explosives safety includes all mechanical, chemical, biological, electrical, and environmental hazards associated with explosives, hazards of electromagnetic radiation to ordnance, and combinations of the foregoing. Equipment, systems, or procedures and processes whose malfunction would hazard the safe manufacturing, handling, maintenance, storage, transfer, release, testing, delivery, firing, or disposal of explosives are also included.

Explosives Safety Distance. The prescribed minimum distance between the hazard class divisions and quantities (net weight) of explosives, and between such explosives and specified exposures (inhabited buildings, public highways, public railways, petroleum tanks, aircraft) affording an acceptable degree of protection and safety. See Quantity Distance.

Explosives Safety Quantity Distance (ESQD) Arcs. The prescribed minimum distance between sites storing or handling hazard Class 1 explosive material and specified exposures (i.e., inhabited buildings, public highways, public railways, other storage or handling facilities or ships, aircraft, etc.) to afford an acceptable degree of protection and safety to the specified exposure. The size of the ESQD arc is proportional to the NEW present.

Explosives Safety Site Approval. Authorization obtained prior to beginning new construction, modifying existing structures, or conducting munitions response actions that create new or impact existing ESQD arcs at DON shore activities where ammunition and explosives are handled, processed, stored or treated, or on a defense site that is known or suspected to contain MEC.

Explosives Safety Status of MPPEH. SAFE means certified as not presenting an explosion hazard, and consequently safe for unrestricted transfer or release pending any further demilitarization requirements or trade security controls. Material that has been certified safe is no longer considered MPPEH provided the chain of custody remains intact. HAZARDOUS means certified as known or suspected to present an explosion hazard.

Exposed Explosives. Explosives that are actually visible (such as unpackaged bulk explosives, disassembled or open components) and that also are susceptible to initiation directly by static or mechanical spark, or those that create (or accidentally create) explosives dust or give off vapors, fumes, or gases in explosive concentrations.

Exposed Site. A location exposed to the potentially hazardous effect (blast, fragments, debris, and heat flux) from an explosion at a potential explosion site (PES). The distance to a PES and the level of protection required for an ES determine the quantity of ammunition/explosives permitted in a PES.

Extremely Heavy Case Munitions. These military munitions are defined as having a cylindrical section case weight to explosive weight ratio greater than 9. Examples of Extremely Heavy Case Munitions are 16-inch Projectiles and most armor piercing (AP) projectiles. (See the Fragmentation Data Base located on the DWESO secure web page to determine if a specific item is extremely heavy case munition.) For purposes of determining Sensitivity Group, Extremely Heavy Case Munitions are considered Robust Munitions.

EZ. Exclusion Zone.

F

ºF. degrees Fahrenheit.

FAA. Federal Aviation Administration.

FAE. Fuel air explosive.

FARP. Forward Arming and Refueling Point.

FBM. Fleet Ballistic Missile.

FCC. Federal Communications Commission.

FCO. Fast Cook-Off.

FDA. Food and Drug Administration.

FEC. Facilities Engineering Command.

FFCA. Federal Facility Compliance Act.

FI. Fragment Impact.

Field Office. An office in which local administrative functions are performed for one area or line as contrasted with the main administrative buildings.

Firebrand. A projected burning or hot fragment whose thermal energy is transferred to a receptor.

Fire Hazard. The hazard resulting from the tendency of certain materials to ignite spontaneously by chemical change, by spark, or by friction and contribute excessively to any fire in which they are involved.

Fire-Resistive. A term used to indicate the property of structures or materials to resist a fire to which they might be subjected without themselves becoming weakened to the point of failure.

Fire Retardant. A term used to designate generally combustible materials or structures which have been treated or have surface coverings designed to retard ignition or fire spread.

Fire Wall. A wall of fire-resistive construction designed to prevent the spread of fire from one side to the other. A fire wall may also be termed a "fire division wall."

Fixed Ammunition. Gun ammunition, larger than .60 caliber, in which all components are completely assembled, the projectile is rigidly crimped to the cartridge case, and the entire unit is loaded into the gun in one operation.

Flameproof. Combustible materials, such as clothing which have been treated or coated to decrease their burning characteristics.

Flame-Resistant. A word applied to combustible materials, such as clothing, which have been treated or coated to decrease their burning characteristics.

Flame Retardant. A substance which is used to condition or treat combustible material so as to retard its ignition of fire spread.

Flammable. Combustible. A flammable material is one which is easily ignited and burns readily.

Flammable Liquid. Any liquid having a flash point below 100° F and a vapor pressure not exceeding 40 psi (absolute) at 100° F and any liquid of lesser hazard when artificially heated or atomized so as to increase the ignition hazard.

Flammable Solid. A solid substance other than an explosive that under conditions incident to transportation, handling, or storage, is likely to cause fires through friction, absorption of moisture, spontaneous chemical changes, or as a result of heat retained from manufacturing or processing.

Flash Point. The mean temperature at which enough vapors of a liquid are given off to mix with air, ignite, and produce flames. Flash points are usually determined by the "closed-cup" method for liquids with flash points around normal temperatures; the "open-cup" method is used for liquids having relatively high flash points. Open-cup data are usually higher than closed-cup results.

FM. Titanium Tetrachloride.

FOB. Forward Operating Base.

Fragmentation. The breaking up of the confining material of a chemical compound or mechanical mixture when an explosion takes place. Fragments may be complete items, subassemblies, pieces thereof, or pieces of equipment or buildings containing the items.

Fragment Distance. The limiting range of a majority of fragments generated by an explosion of ammunition. Fragment distances are normally distances for hazard Class 1, Division 2 items as prescribed in NAVSEA SW020-AC-SAF-010.

Fragment Hazard. The hazard resulting from the tendency of certain heavily encased explosive materials to explode progressively – round, a box, or possibly one pile or stow of projectiles or fixed

ammunition at a time – causing damage and destruction or propagation of explosion from one explosive site to another by the ejection into space of a considerable number of fragments. A hazardous fragment is one having an impact energy of 58 ft-lb or greater. An acceptable density of hazardous fragments is one or less per 600 square feet.

Fragmenting Military Munitions. These military munitions have cases that are designed to fragment (for example, naturally fragmenting warheads, continuous rod warheads, items with scored cases and military munitions that contain pre-formed fragments). See also Sensitivity Group.

Friable. Term used to describe brittle or easily crumbled grains of powder.

FS. Sulphur Trioxide-Chlorosulfonic Acid Mixture.

FSU. Field Storage Unit.

Ft. Feet.

Ft-lb. Foot - Pounds.

FUDS. Formerly Used Defense Sites.

G

Gal. Gallon.

Gas Mask. Air-purifying respirator used for gaseous and vapor contaminants. This form of respirator includes a facepiece to provide eye and face protection. Gas masks do not provide oxygen and may not be utilized in environments with oxygen levels below 19.5%.

GB. Sarin.

GCC. Geographic Combatant Commander.

General Public. Persons not associated with a DoW installation's mission or operations such as visitors, to include guests of personnel assigned to the installation, or persons not employed or contracted by DoW or the installation.

GFM. Government Furnished Material.

GIS. Geographic Information System.

GP. General Purpose.

Ground-Fault Circuit Interrupter. A device that interrupts the electric circuit when a fault current to ground exceeds some predetermined value that is less than that required to operate the overcurrent protective device of the supply circuit. These devices differ from ground-fault detectors which merely signal the user that a faulty circuit exists and which do not automatically interrupt the circuit.

GSE. Ground Support Equipment.

Guided Missile. An unmanned vehicle designed as a weapon that travels above the surface of the earth along a course or trajectory that can be altered by an automatic or remotely controlled mechanism within the vehicle itself. The missile normally is destroyed in carrying out its mission.

H

H. Mustard.

HAS. Hardened Aircraft Shelters.

Hazard. Any condition which may cause an accident or contribute to the severity of an accident. For purposes of classification, four general types of hazards are recognized in connection with ammunition and explosives. These are mass-explosion hazard, mass fire hazard, non-mass-detonating (fragmenting) hazard, and moderate fire, no blast hazard.

Hazard Analysis. The logical, systematic examination of an item, process, condition, facility, or system to identify and analyze the probability, causes, and consequences of potential or real hazards.

Hazardous Fragment. A hazardous fragment is one having an impact energy of 58 ft/lb or greater.

Hazardous Fragment Density. A density of hazardous fragments exceeding one per 600 square feet.

Hazardous Locations (Electrical Equipment). Locations where flammable gases of vapors are or may be present in the air in explosive or ignitable mixtures or where combustible dust or easily ignitable particles or fibers may be present.

Hazardous Material. The component of, or an item of ammunition which is inherently designed to produce the necessary energy required for ignition, propulsion, detonation, fire or smoke, thus enabling the item to function. Also, a material (corrosive, oxidizer, etc.) which inherently is dangerous and capable of serious damage and which, therefore, requires regulated handling to avoid creating accidents in connection with its existence and use.

HAZMAT. Hazardous Material.

HBX. High Blast Explosives.

HC. Hexachloroethane.

HCB. Hazard Control Briefing.

HC/D. Hazard Class/Division.

HD. Mustard, Distilled.

HE. High Explosive.

Heavy Wall. Walls with thickness of greater than or equal to 12 inches of reinforced concrete. Heavy walls are considered capable of stopping primary fragments.

Heavy Roof. Roofs with a thickness of greater than 5.9 inches of reinforced concrete. Heavy roofs are considered capable of stopping primary fragments.

HERO. Hazards of Electromagnetic Radiation to Ordnance.

HFD. Hazardous Fragment Distance.

HG. Mercury.

High Explosive. A substance which, in its application as a primary explosive, booster or main charge, in warheads and other applications, is generally required to detonate. This material may also be used as an energetic ingredient in propellants, pyrotechnics or other applications. RDX, HMX and TNT are examples of high explosives.

High Explosive Equivalent. See Explosive Equivalent.

HMMWV. High mobility Multi-Purpose Wheeled Vehicle.

HMX. Cyclotetramethylene tetranitramine, a main charge high explosive.

HN. Nitrogen Mustard.

HNS. Hexanitrostilbene.

Holding Yard. A location for groups of railcars, trucks or trailers used to hold ammunition, explosives and other hazardous materials for interim periods prior to storage or shipment.

Host Activity. For the purposes of explosives safety, the host activity is the activity that is the property holder of a Navy or Marine Corps activity whose mission directly involves or supports ammunition and/or explosives operations.

HQMC. Headquarters, Marine Corps.

HT. Mustard, T-Mixture.

Hybrid Propellants. A propellant charge using a combination of physically separated solid and liquid (or gelled) substances as fuel and oxidizer.

Hygroscopicity. The tendency of a material to absorb moisture from its surroundings.

Hypergolic. Term applied to the self-ignition of a fuel and an oxidizer upon mixing with each other without a spark or other external aid.

I

I&L. Installations and Logistics.

IBD. Inhabited Building Distance.

IDS. Intrusion Detection System.

IEEE. Institute of Electrical and Electronics Engineers.

Igloo Magazine. See Standard Igloo Magazine.

Igniter. An assembly which, upon application of a mechanical or electrical stimulus, emits a flame capable of igniting a pyrotechnic or explosive material or device.

Ignition Temperature. The mean temperature at which a combustible material can be ignited and will continue to burn when the ignition source is removed. The ignition temperature for any one substance will vary with its particle size, confinement, moisture content and ambient temperature.

IHE. Insensitive High Explosives.

ILD. Intraline Distance.

IM. Isobutyl Methylmethacrylate or Insensitive Munitions.

IMD. Intermagazine Distance.

IMO. International Maritime Organization.

Impulse Ammunition. Cartridges or charges consisting of specially prepared propellant charges contained in cartridge cases fitted with primers and assembled as blank cartridges for launching torpedoes, for propelling line throwing (carrying) projectiles, and for similar uses.

Incendiary. A chemical agent used primarily for igniting combustible substances with which it is in contact by generating sufficient heat to cause ignition.

Incident. See Explosive Mishap.

Inert Ammunition. Ammunition and components that contain no explosive material. Inert ammunition and components include:

a. Ammunition and components with all explosive material removed and replaced with inert material.

b. Empty ammunition or components.

c. Ammunition or components that were manufactured with inert material in place of all explosive material.

Inert Fill Material. Nonhazardous materials such as sand, plaster, binders with salts or metals, or cement that is used in ammunition items or components to simulate explosive material.

Inert Material. For the purposes of storage and use as described in this publication, any materials that are not considered Class 1 or energetic liquids/materials, and are not subject to ESQD standards by themselves but may be subject to applicable Occupational Safety and Health Administration (OSHA) standards.

Inhabited Building(s). A building or structure, other than an operating building, occupied in whole or part as a habitation for human beings, or a building or structure where people are accustomed to assemble, such as a church, schoolhouse, railroad station and similar transportation facilities, store, theater, or factory both within and outside an establishment.

Inhabited Building Distance. The minimum distance permitted between an inhabited building and an ammunition or explosives location for the protection of administration, quarters, industrial and other

similar areas within a naval shore establishment. Inhabited building distances shall be provided between ammunition or explosives locations and the boundary of a shore establishment of the nearest point beyond the boundary where such inhabited structures could be erected.

Initiating Explosive. A high explosive which is extremely sensitive to heat and shock and is normally used in small quantities to initiate the detonation or deflagration of a larger mass of less sensitive high explosive. Some authorities recognize the term "primary explosive" as being synonymous with "initiating explosive."

Insensitive High Explosives. Explosive substances which, although mass detonating, are so insensitive that there is negligible probability of accidental initiation or transition from burning to detonation. TATB is an example.

Insensitive Munitions. Munitions which reliably fulfill (specified) performance, readiness and operational requirements on demand, but which minimize the probability of inadvertent initiation and severity of subsequent collateral damage to the weapon platform (including personnel) when subjected to unplanned stimuli.

ISO. International Standards Organization.

Inspection. A critical examination conducted by qualified personnel, using established techniques, to obtain an objective evaluation of the adequacy of personnel, equipment or procedures.

Inspection Station. A designated location at which trucks and railcars containing ammunition and explosives are inspected.

Installation Related Personnel. Military personnel (to include family members), DoW employees, DoW contractor personnel, and other personnel having either a direct operational (military or other Federal personnel undergoing training at an installation) or logistical support (for example, vendors) relationship with installation activities.

Interchange Yard. An area set aside for the exchange of railcars or vehicles between the carrier and establishment.

Intermagazine Separation. See Magazine Distance.

Intraline Distance. The distance to be maintained between any two operating buildings and sites within an operating line, at least one of which contains or is designed to contain explosives, except that the distance from a service magazine for the line to the nearest operating building shall be not less than the intraline distance required for the quantity of explosives contained in the service magazine.

Investigator. A professional scientist or engineer in charge of specific RDT&E projects.

IR. Infrared.

ISIC. Immediate Superior in Command.

ISSA. Inter-Service Support Agreement.

J

J. Joules.

JATO. Jet Assisted Take-Off.

JHCS. Joint Hazard Classification System.

Joint Storage. DoW/non-DoW explosives storage under DoW control.

JP. Jet Propulsion.

K

K-Factor. The factor in the formulas D=KW (English units) or D=KQ (metric units) which is used in quantity-distance determinations. The K-factor is a constant and represents the degree of damage that is acceptable. Typical constants used in English units are 1.25, 4.5, 9, 11, 18, 24, 30, 40 and 50; the lower figures indicating the acceptance of a greater amount of damage. The value of K in English units is approximately 2.5 times its value in metric units.

Km. Kilometer.

Km/h. Kilometer per hour.

kV. Kilovolt.

L

L. Lewisite.

Land Use Control. A physical, legal, or administrative mechanism that restricts the use of, or limits access to, real property, to manage risks to human health and the environment. Physical mechanisms encompass a variety of engineered remedies to contain or reduce contamination and/or physical barriers to limit access to real property, such as fences or signs.

Landing Force Operational Reserve Material. The material including rations, ammunition, fuel, clothing, weapons, etc., necessary to support a Marine amphibious unit for approximately 30 days.

LAP. Loading, Assembly and Packaging.

LCL. Less than carload.

LDAR. Lightning Detection and Ranging.

Lead. A lead is an explosive train component which consists of a column of high explosive, usually small in diameter, that is used to transmit detonation from one detonating component to succeeding high-explosive component. The high explosive charge is usually loaded into a metal cup or can (typically about 0.190 inch diameter by 0.3 inch long). It is generally used to transmit the detonation from a detonator to a booster charge.

LEL. Lower Explosive Limit.

LEPC. Local Emergency Planning Committee.

Line Management. For the purposes of this document, line management is defined as those persons to whom the Commander of an RDT&E activity has delegated supervisory responsibility.

LFORM. See Landing Force Operational Reserve Material.

LLP. Lightning Location and Protection Direction Finder System.

Loading Docks. Facilities, structures or paved areas designed and installed for transferring ammunition and explosives between any two modes of transportation.

Logistic Movement. The transfer of ammunition to or from a ship at an authorized handling location.

Lower Explosive Limit. The lowest concentration by percent of volume of a gas or vapor in the atmosphere at normal temperatures and pressures at which the gas or vapor will ignite and sustain combustion.

LOX. Liquid Oxygen.

LPG. Liquefied Petroleum Gas.

LPS. Lightning Protection System.

LRIP. Limited Rate Initial Production.

LUC. See Land Use Control.

M

M. Meter.

Magazine. Any building or structure, except an operating building, used for the storage of ammunition and explosives.

Magazine Area. The area on shore surrounding a magazine or group of magazines. The term is used to denote the areas adjoining or surrounding explosive storages where freedom of action is restricted in the interests of safety.

Magazine Designator. A three-part symbol of letters and numbers which identify the magazine group or area in which the magazine is located, the type and capacity of the magazine, and the sequence number within the magazine group or area assigned to the magazine.

Magazine Distance. The minimum distance permitted between any two magazines depending on the type of magazine and the Class/Division and quantity of explosives and ammunition involved; the type and quantity of explosives requiring the greater distance will govern the magazine separation. Also called Intermagazine Separation.

Magazine Placards. Safety placards that are required to be posted inside a magazine on or near each door.

Main Charge Explosive. An explosive material that is less sensitive than a booster explosive and generally used as the final charge in any explosive application. Because of its relative insensitivity, this type of explosive ordinarily requires initiation by a booster explosive. Composition A-3, TNT, and PBXN-106 are examples of a main charge explosive.

Maintenance Movement. Any movement of ammunition from its normal shipboard location to another location in order to conduct required assembly, disassembly, maintenance, or test of a weapons system, or maintenance of a stowage area. A maintenance movement may include strike up/strikedown, movement within the normal stowage area, or movement from one stowage area to another.

Malfunction. See Explosive Mishap.

MAKE. Marine Ammunition Knowledge Enterprise.

MARCORPS. Marine Corps.

MARCORSYSCOM. Marine Corps Systems Command.

Marshalling Yard. A designated area near a port facility where a unit or activity consolidates their equipment and prepares for movement.

Mass-Detonating Explosives. High explosives, black powder, certain propellants, certain pyrotechnics, and other similar explosives, alone or in combination, or loaded into various types of ammunition or containers, most of the entire quantity of which can be expected to explode virtually instantaneously when a small portion is subjected to fire, to severe concussion or impact, to the impulse of an initiating agent, or to the effect of a considerable discharge of energy from without. Such an explosion normally will cause severe structural damage to adjacent objects. Explosion propagation may occur immediately to other items of ammunition and explosives stored sufficiently close to, and not adequately protected from, the initially exploding pile with a time interval short enough so that two or more quantities must be considered as one for quantity-distance purposes.

Material Documented as an Explosive Hazard. MPPEH that cannot be documented as MDAS, that has been assessed and documented as to the maximum explosive hazards the material is known or suspected to present, and for which the chain of custody has been established and maintained. This material is no longer considered to be MPPEH.

Material Documented as Safe. MPPEH that has been assessed and documented as not presenting an explosive hazard and for which the chain of custody has been established and maintained. This material is no longer considered to be MPPEH.

Material Potentially Presenting an Explosive Hazard. Material owned or controlled by the Department of Defense that, prior to determination of its explosives safety status, potentially contains explosives or munitions (for example, munitions containers and packaging material; munitions debris remaining after munitions use, demilitarization, or disposal; and range-related debris) or potentially contains a high enough concentration of explosives that the material presents an explosive hazard (for example, equipment, drainage systems, holding tanks, piping, or ventilation ducts that were associated with munitions production, demilitarization, or disposal operations). Excluded from MPPEH are military

munitions and military munitions-related material that are to be used or reused for their intended purpose that are within a DoW component's established munitions management system and other hazardous items that may present explosion hazards (such as gasoline cans, compressed gas cylinders) that are not munitions and are not intended for use as munitions.

Maximum Credible Event. In hazards evaluation, the maximum credible event from a hypothesized accidental explosion, fire, or toxic chemical release (with explosives contribution) is the worst single event that is likely to occur from a given quantity and disposition of ammunition and explosives. The event must be realistic with a reasonable probability of occurrence considering the explosive propagation, burning rate characteristics, and physical protection given to the items involved. The MCE evaluated on this basis may then be used as a basis for effects calculations and casualty predictions. For HC/Ds 1.2.1 and 1.2.3, the MCE is expressed as a weight that is the product of the NEWQ and either the number of ammunition and explosives that reacts virtually instantaneously in the Sympathetic Reaction or Liquid Fuel/External Fire tests, or the number of ammunition and explosives in three unpalletized, outer shipping packages. The assigned MCE for a specific HC/D 1.2.1 or 1.2.3 items is listed in NAVSEA SW020-AC-SAF-010.

Maximum Fragment Distance. The calculated maximum distance to which any fragment from the cylindrical portion of an ammunition and explosives case is expected to be thrown by the design mode detonation of a single ammunition and explosives item. This distance does not address fragments produced by sections of nose plugs, base plates, boattails, and/or lugs. These special fragments, from the non-cylindrical portions of the ammunition and explosives case, can travel to significantly greater distances (that is, less than 10,000 feet (3048 meters)) than the calculated maximum distances. The maximum fragment distance may also be the measured distance, based on testing, to which any fragment from an ammunition and explosives item is thrown.

MC. Munitions Constituents.

MCE. Maximum Credible Event.

MCDS. Modular Cargo Delivery Station.

MCO. Marine Corps Order.

MDAS. Material Documented as Safe.

MDD. Maintenance Due Dates.

MDEH. Material Documented as an Explosive Hazard.

MEC. Munitions and Explosives of Concern.

MEQ. Mission Essential Quantities (MEQ).

MGFD. Munition with the Greatest Fragmentation Distance.

MHE. Materials Handling Equipment.

MHz. Megahertz.

MILCON. Military Construction.

Military Munitions. All ammunition products and components produced or used by or for the U.S. Department of Defense or the U.S. Armed Services for national defense and security, including military munitions under the control of the Department of Defense, the U.S. Coast Guard, the U.S. Department of Energy, and National Guard personnel. The term military munitions includes: confined gaseous, liquid, and solid propellants, explosives, pyrotechnics, chemical and riot control agents, smokes, and incendiaries used by DoW components, including bulk explosives and chemical warfare agents, chemical munitions, rockets, guided and ballistic missiles, bombs, warheads, mortar rounds, artillery ammunition, small arms ammunition, grenades, mines, torpedoes, depth charges, cluster munitions and dispensers, demolition charges, and devices and components thereof. Military munitions do not include wholly inert items, improvised explosive devices, and nuclear weapons, nuclear devices, and nuclear components thereof. However, the term does include non-nuclear components of nuclear devices, managed under DOE's nuclear weapons program, after all required sanitizing operations under the Atomic Energy Act of 1954, as amended, have been completed. See 40 CFR §260.10.

Military Munitions Burial Site. A site, regardless of location, where military munitions were intentionally buried, with the intent to abandon or discard. This term includes burial sites used to dispose of military munitions in a manner consistent with applicable environmental laws and regulations or the national practice at the time of burial. It does not include sites where munitions were intentionally covered with earth during authorized destruction by detonation, or where in-situ capping is implemented as an engineered remedy under an authorized response action.

MILVAN. Military van (container).

Misfire. Failure of a component to fire or explode following an intentional attempt to cause an item to do so.

Mission Essential Quantities (MEQ). The amount of explosive material needed to meet mission requirements, when not limited by net explosive weight.

MLI. Munitions List Item.

MLW. Mean Low Water.

MN. Multinational.

MNT. Mononitrotoluene.

MOA. Memorandum of Agreement.

MOU. Memorandum of Understanding.

Mound. An elevation of earth having a crest of at least 3 feet wide, with the earth at the natural slope on each side and with such elevation that any straight line drawn from the top of the side wall of a magazine or operating building or the top of a stack containing explosives to any part of a magazine, operating building, or stack to be protected will pass through the mound. The toe of the mound shall be located as near the magazine, operating building, or stack as practicable. Earth used for artificial construction should contain not more than 15% of stones or gravel, all of which should pass through a 1-inch screen.

MPAN. Missile Power Application Non-Launch.

MPF ships. Maritime Prepositioning Force ships.

Mph. Miles per Hour.

MPPEH. Material Potentially Presenting an Explosive Hazard.

MR. Munitions Rule.

MRA. Mishap Risk Assessment or Munitions Response Area.

MRMA. Munitions Risk Management Assessment.

MRAP. Mine Resistant Ambush Protected.

MRS. Munitions Response Site.

MSC. Military Sealift Command.

MSD. Minimum Separation Distance.

MSRC. Magazine Storage Requirements Calculator.

Munition. An assembled ordnance item that contains explosive material(s) and is configured to accomplish its intended mission.

Munition with the Greatest Fragmentation Distance. The munition with the greatest fragment distance that is reasonably expected (based on research or characterization) to be encountered in any particular area.

Munitions and Explosives of Concern. Distinguishes specific categories of military munitions that may pose unique explosives safety hazard/risks and means UXO, DMM or MCs (such as TNT, RDX) present in high enough concentrations to pose an explosive hazard.

Munitions Constituents. Any materials originating from UXO, DMM, or other military munitions, including explosive and non-explosive materials, and emission, degradation, or breakdown elements of such ordnance or munitions. (10 U.S.C. §2710(e)(4))

Munitions Debris. Remnants of munitions (such as fragments, penetrators, projectiles, shell casings, links, fins) remaining after munitions use, demilitarization, or disposal.

Munitions Emergency Response. See Explosives (or Munitions) Emergency Response.

Munitions Response. Response actions, including investigation, removal actions and remedial actions to address the explosives safety hazards and human health or environmental risks presented by UXO, DMM, or MC.

Munitions Response Area. Any area on a defense site that is known or suspected to contain UXO, DMM, or MC. Examples include former ranges, munitions burial areas, and explosive processing facilities. A munitions response area is comprised of one or more munitions response sites.

Munitions Response Site. A discrete location within a MRA that is known to require a munitions response.

MUSE. Mobile Utilities Support Equipment.

MWD. Military Working Dogs.

MWR. Morale, Welfare and Recreation.

N

Na. Sodium.

NACO. Navy Cool.

NAR. Notice of Ammunition Reclassification.

NASA. National Aeronautics and Space Administration.

NATC. Naval Air Test Center.

NATO. North American Treaty Organization.

NATOPS. Naval Air Training and Operating Procedures Standardization.

NAVAIRSYSCOM. Naval Air Systems Command.

NAVFAC. Naval Facilities Engineering Systems Command.

Navigable Streams. Those parts of streams, channels or canals capable of being used in their ordinary or maintained condition as highways of commerce over which trade and travel are or may be conducted in the customary modes, not including streams which are not capable of navigation by barges, tugboats, and other large vessels, unless they are extensively and regularly used for the operation of pleasure boats.

NAVMED. Navy Medicine.

NAVOL. Hydrogen Peroxide, an oxidizer.

NAVSEASYSCOM. Naval Sea Systems Command.

NAVSTA. Naval Station.

NBC. Nuclear Biological and Chemical.

NC. Nitrocellulose.

NCC. Navy Crane Center or Navy Component Commander.

NCEL. Naval Civil Engineering Laboratory.

NDAI. No DoD Action Indicated.

NE. Nitrate-ester.

NEC. National Electrical Code.

NEQ. Net Explosive Quantity (in kilograms).

Net Explosive Weight.

a. Facility Siting. Use the total weight of all explosive substances (i.e., high explosive weight, propellant weight, and pyrotechnic weight) in the ammunition and explosives, unless testing has been conducted to support and approved different value based on the contribution of the energetic components. This NEW is represented in NAVSEA SW020-AC-SAF-010 as the storage NEW, and in DWESO documents as NEWQD. For all HC/D 1.3 and 1.4 ammunition and explosives the NEWQD is equal to the NEW.

b. Transportation. Use the total weight of all explosive substances (i.e., high explosive weight, propellant weight, and pyrotechnic weight) in the ammunition and explosives. This NEW is represented in NAVSEA SW020-AC-SAF-010 as the Trans NEW, and in DWESO documents as NEW.

NEW. Net Explosive Weight.

NEWQD. Net Explosives Weight for Quantity-Distance.

NFPA. National Fire Protection Association.

NG. Nitroglycerine.

Nitrogen Padding (or Blanket). The filling of the void or ullage of a closed container with nitrogen gas to prevent oxidation of the chemical contained therein and to avoid formation of a flammable mixture; also may be used to mean the maintenance of a nitrogen atmosphere in or around an operation, piece of equipment, and the like.

NLDN. National Lightning Detection Network.

NMCPHC. Navy and Marine Corps Public Health Center.

NMR. New Material Review.

NMRC. New Materials Review Committee.

NOFA. No Further Action.

Noncombustible. Not combustible, incapable of burning.

Noncombustible Construction. Building constructed of material, or combination of materials, which will not ignite, burn, or support combustion when subjected to heat or fire (that is, steel, brick, tile, concrete, slate and masonry construction).

Non-DoW Component. Any entity (Government, private, or corporate) which is not a part of the Department of Defense.

Non-DoW Operations/Storage. Explosives operations/storage conducted on DoW property in accordance with only this table, BATF, FAA or other federal, state, and local explosives safety requirements. Under these types of operations, DoW will be responsible only for ensuring IM standards

are met as outlined in explosives site plan submissions. This does not constitute “DoW oversight” as intended in the above definition of “DoW Operations/Storage.”

Non-Enduring Locations. Overseas locations, other than enduring locations listed in DoD Enduring Location Master List (S), where military munitions are present or forecasted to be present.

Non-Robust Munitions. For purposes of determining Sensitivity Group, Non-Robust Munitions are those hazard Class/Division 1.1 and 1.2 military munitions that are not categorized as SG 1, SG 3, SG 4, or SG 5. Examples of such munitions include torpedoes and underwater mines. See also Sensitivity Group. For purposes of determining case fragment distances for intentional detonations, Non-Robust Munitions are those military munitions that do not meet the definition of Robust Munitions. See Robust Munitions.

Nonservice Ammunition. Ammunition used for training personnel in all aspects of a familiarization program is classified as nonservice ammunition. This ammunition may be of service quality or may be specifically modified or loaded practice ammunition, inert training, inert dummy/drill, or exercise/recoverable ammunition.

NOSSA. Naval Ordnance Safety and Security Activity.

NOSSA Atlantic. Naval Ordnance Safety and Security Activity, Atlantic.

NOSSA Pacific. Naval Ordnance Safety and Security Activity, Pacific.

NP. Napalm.

NSDSA. Naval Systems Data Support Activity.

NSWC. Naval Surface Warfare Center.

MLW. Mean Low Water.

NSWC IHD. Naval Surface Warfare Center Indian Head Division.

NWP. Naval Warfare Publication.

O

OBA. Oxygen Breathing Apparatus.

OB/OD. Open Burn/Open Detonation.

OCE. Office of Chief of Engineers, Department of the Army.

OCONUS. Outside the Continental United States.

OESO. Ordnance Environmental Support Office.

OHE. Ordnance Handling Equipment.

OIS. Ordnance Information System.

On-Call Construction Support. Construction support provided by personnel who are called to the site on an as-needed basis. Personnel may come from off-site when called, or be on-site and available but not continually present during intrusive activities. On-call construction support is appropriate where the probability of encountering MEC has been determined to be low using risk/hazard assessment methodology.

On-Site Construction Support. Construction support provided by personnel who are continuously present at the site during intrusive activities. On-site construction support is appropriate where the probability of encountering MEC has been determined to be moderate to high using risk/hazard assessment methodology.

Open Burn. An open-air combustion process by which excess, unserviceable, or obsolete munitions are destroyed to eliminate their inherent explosive hazards.

Open Detonation. An open-air process used for the treatment of excess, unserviceable or obsolete munitions whereby an explosive donor charge initiates the munitions being treated.

Operating Building. Any site, facility, or structure, except a magazine, in which operations associated with ammunition and explosives are conducted; for example, manufacturing, processing, handling, loading, or assembling.

Operating Line. A group of buildings, facilities, or related work stations so arranged as to permit performance of the consecutive steps in the manufacture of an explosive; or in the loading, assembly, modification and maintenance of ammunition.

Operational Inspection. An observed demonstration of the capability of an inspected unit or activity to perform the mission and task for which it is organized or designed. The objectives of operational inspections are to obtain:

a. A realistic evaluation of the operational and material readiness of combat units to perform assigned missions.

b. An evaluation of the adequacy with which shore based commands or units execute assigned missions in support of the readiness of combat forces.

Operational Necessity. A situation of such compelling urgency that failure to grant a deviation from established explosives safety criteria will have a harmful impact on the mission readiness of DON forces.

Operational Range. A range that is under the jurisdiction, custody, or control of the Secretary of Defense and is used for range activities; or although not currently being used for range activities – that is still considered by the Secretary to be a range and has not been put to a new use that is incompatible with range activities. The term “range” when used in the geographical sense, means a designated land or water area that is set aside, managed and used for range activities of the Department of Defense. This term includes the following: firing lines and positions, maneuver areas, firing lanes, test pads, detonation pads, impact areas, electronic scoring sites, buffer zones with restricted access, and exclusionary areas; and airspace areas designated for military use in accordance with regulations and procedures prescribed by the Administrator of the Federal Aviation Administration.

Operational Shield. A barrier constructed at a particular location or around a particular machine or operating station to protect personnel, material, or equipment from the effects of a possible localized

fire or explosion. Operational shields when properly designed in accordance with MIL-STD-398, "Shields, Operational for Ammunition Operations, Criteria for Design of and Tests for Acceptance", should protect personnel and assets from thermal, pressure and fragmentation hazards resulting from an accidental or intentional detonation and deflagration of ammunition or explosives.

Operational Training. Training conducted with inert, service, or practice ammunition in maintenance, production or other operational areas. This training may include actual operation and firing of weapon systems and assemblies, disassembly, test, manufacture, or disposal of ammunition.

OPM. Office of Personnel Management.

OPNAV. Office of the Chief of Naval Operations.

OPNAVINST. Office of the Chief of Naval Operations Instruction.

Ordnance. Military materiel such as combat weapons of all kinds with ammunition and equipment required for their use. Ordnance includes all the things that make up a ship's or aircraft's armament – guns, ammunition, and all equipment needed to control, operate, and support the weapons.

Ordnance Handling Equipment. Specially designed mechanical equipment used for assembling, disassembling, handling, transporting, lifting, positioning, rotating, or containing conventional weapons, ammunition, explosives, and related components.

ORM. Operational Risk Management.

OSC. Operations Safety Committee.

OSHA. Occupational Safety and Health Administration.

Outdoor Storage Sites. Locations designated for the storage of ammunition in the open.

Overhaul of Ammunition. The act of determining the serviceability of the primary components of an item, and the performance of exterior maintenance as required to render the item fully serviceable.

Oxidizer. A substance that yields oxygen or oxygenizing species that readily support the combustion of organic matter, metals, flammable metals, or reducing agents.

P

PAD. Propellant Actuated Device.

PAL. Permissive Action Link.

Pallet. A wood or metal, square or rectangular platform upon which cargo is located so that the cargo and pallet may be moved as a unit and stacked without cargo rehandling. The platform is raised sufficiently to allow for pallet engagement by the tines of a forklift truck.

Partial Detonation. Instances when only part of the total explosive load in ammunition detonates. Strong air shock and small as well as large case fragments are produced. Small fragments are similar to those in normal complete detonation. Extensive blast and fragmentation damage results to the surrounding area. Amount of damage and extent of breakup of cases into small fragments increases

with increasing amount of explosive that detonates. Severity of blast could cause large ground crater, if ammunition is large bomb; hole size depends on amount of explosive that detonates.

Passenger Railway. Any steam, diesel, electric, or other railway which carries passengers for hire.

Passenger Railway Distance. The minimum distance permitted between a passenger railway and a site where ammunition and explosives are located. Also referred to as Public Railway Distance. Refer to definition of Public Traffic Route.

PB. Lead.

PB (IPB) Projectile. An object projected by applied exterior force and continuing in motion by virtue of its own inertia, such as a bullet, rocket, shell or grenade.

PBX. Plastic Bonded Explosives.

PBXN. Plastic Bonded Explosives Navy.

PCP. Pentachlorophenol.

PD. Position description.

PEL. Permissible Exposure Limits.

PEP. Propellants, explosives and pyrotechnics.

Permissible Working Load. See Safe Working Load.

Permissive Action Link. Devices used to activate components within nuclear weapon systems.

PES. Potential Explosion Site.

PETN. Pentacrythrite Tetranitrate.

PHA. Preliminary hazards analysis.

PHL. Preliminary hazards list.

PHST. Packaging, Handling, Storage, Transportability.

PIAP. Powered Interrogation and Programming.

PIAP Ground. A single-point ground used to maintain a zero potential difference between the electrical system ground of the test set and the weapon during unrestrained electrical interrogation.

Pier. A landing place or platform built into the water, perpendicular or oblique to the shore, for the berthing of vessels.

PKP. Purple K Powder.

PM. Program Manager.

PMO. Program Management Office.

PO. Propylene Oxide.

POL. Petroleum, Oils and Lubricants.

POM. Preparation for Overseas Movement.

Portable Magazine. Commercially built, pre-engineered magazines frequently used as read-service lockers. While their design suggests easy relocation, these magazines are covered by all safety and siting criteria applicable to any permanently constructed magazine.

Positive Mechanical Ventilation. Circulation of air through an enclosure or area by a motor-driven fan or blower.

Positive-Pressure Ventilation. Forced injection of air into an enclosure or area by a motor-driven fan or blower in order to prevent material outside the enclosure or area from entering the enclosure or area by maintaining a higher pressure inside than outside of the enclosure or area.

Potential Explosion Site. The location of a quantity of explosives that will create a blast, fragment, thermal, and/or debris hazard in event of an accidental explosion of its contents. Quantity limits for ammunition/explosives at a PES are determined by the distance to an exposed site.

Powder Description Sheet. A historical record describing the details of manufacture of smokeless powder including all chemical and physical tests made on the raw materials and the finished powder on a lot-by-lot-basis.

Powder Index. The number assigned to a lot or blend of several lots of smokeless powder after the powder has been proofed and accepted.

Power Application Non-Launch. The application of power to a weapon without the intent to launch. Power application non-launch includes but is not limited to interrogation, reprogramming, or any form of built-in test in any operational environment. Power application non-launch activities may include proximity testing.

PPE. Personal Protective Equipment. See also Protective Clothing, Protective Mask, and Safety Shoes.

Practice Ammunition. Ammunition specifically designed or modified for use in exercises, practice or operational training. Practice ammunition may be either expendable or recoverable. Practice ammunition is not inert and may contain all the explosive material normally contained in service ammunition. Practice ammunition may contain additional explosive material such as pyrotechnics, spotting charges or flotation devices to assure destruction, location or recovery.

PRC. Process Review Committee.

Primary Explosive. Sensitive material used to initiate chemical reaction in booster explosives or as an initiation or ignition source for squibs and ignites used with propelling and pyrotechnic devices. Primary explosives are sensitive to heat, impact and shock and in warheads, are separated from the booster by the interruption of the fuze, exploder, or safe-and-arm device. Lead Styphnate and DXN-1 are

examples of an approved primary explosive. Lead Azide and Mercury Fulminate are examples of restricted or obsolete primary explosives.

Primer. The primer is a mechanically or electrically initiated device, as originally used in military fuse trains, to initiate another explosive charge or the next element in the explosive train. Primers are more brisant than squibs and are of lower power than detonators.

Process. A series of operations on ammunition and explosives related to manufacture; explosive LAP; maintenance, reconditioning, renovation, rework, and repair; modification and conversion; RSS&I; handling, shipping, loading, and unloading; RDT&E of ordnance end items or explosive components; demilitarization; disposal, munitions response, and MPPEH processing.

Production. The conversion of raw materials into products and/or components thereof, through a series of manufacturing processes. It includes functions of production engineering, controlling, quality assurance, and the determination of resources requirements.

Production Building. Any building or structure, except a magazine, in which ammunition and explosives are manufactured, renovated, reconditioned, reclaimed or demilitarized.

Prohibited Area. A specifically designated area at airfields, seadromes or heliports in which all ammunition and explosives facilities are prohibited.

Projectile. An object projected by an applied exterior force and continuing in motion by virtue of its own inertia, as a bullet, bomb, shell or grenade. Also applied to rockets and to guided missiles.

Propellant. Substances or mixtures of substances used for propelling projectiles and missiles, or to generate gases for powering auxiliary devices. When ignited, propellants burn at a controlled rate to produce quantities of gas capable of performing work but they must be capable of functioning in their application without undergoing a deflagration-to-detonation transition (DDT).

Propelling Charge. As pertains to gun ammunition, a propelling charge consists of a primed cartridge case loaded with smokeless powder; the mouth of the case sealed by a friable plug. It is a separate unit from the projectile and is termed as a unit of "separated" ammunition.

Protective Clothing. Clothing especially designed, fabricated, or treated to protect personnel against hazards caused by extreme changes in physical environment or dangerous working conditions.

Protective Mask. A field protective mask consisting of a full face mask and all component parts used for protection against field concentrations of toxic chemicals.

Proximity Testing. Refers to testing activities that do not require a test cell or a specific separation distance between the test area and related personnel. This type of testing typically involves operations where the operator is in close proximity to, or co-located with, the weapon being tested.

PS. Chloropicrin.

Psf. Pounds per square foot.

PT-1. Oil and Metal Incendiary Mixture.

PTR. Public Traffic Route.

PTRD. Public Traffic Route Distance.

Public Highway. Any street, road or highway not under DoW custody used by the general public for any type of vehicular traffic.

Public Highway Distance. The minimum distance permitted between a public highway and a site where ammunition and explosives are located. Refer to Public Traffic Route.

Public Traffic Route. Any public street, road, highway, navigable stream, or passenger railroad (includes roads on a military reservation that are used routinely by the general public for through traffic).

PWP. Plasticized White Phosphorous.

Pyrophoric. Capable of spontaneous ignition upon contact with air, water, or other materials containing oxygen.

Pyrotechnic. Substances or mixtures of substances which, when ignited, undergo an energetic chemical reaction at a controlled rate intended to produce, on demand and in various combinations, specific time delays or quantities of heat, noise, smoke, light or IR radiation. Pyrotechnics must be capable of functioning in their application without undergoing a DDT.

Pyrotechnic Material. The explosive or chemical ingredients, including powdered metals, used in the manufacture of military pyrotechnics.

Q

QA. Quality Assurance.

QC. Quality Control.

Q-D. Quantity Distance.

QRP. See Qualified Recycling Program.

Qualified Receiver of MDEH. DoW and commercial entities (i.e., activities, units, businesses) that have personnel who are trained and experienced in the safe handling of the MDEH they are authorized, licensed or otherwise permitted to receive, manage, and conduct disposition and are capable of attaining a DoW-approved site plan.

Qualified Recycling Program. Organized operations that require concerted efforts to divert or recover scrap or waste, as well as efforts to identify, segregate, and maintain the integrity of the recyclable materials in order to maintain or enhance their marketability. If the program is administered by a DoW component, a QRP includes adherence to a control process providing accountability for all materials processed through program operations.

Quality Assurance. An integrated system of management activities involving planning, implementing, assessing, reporting, and quality improvement to ensure a process, item, or service is of the type and quality needed to meet project requirements. (U.S. Army Corps of Engineers Engineering Pamphlet [EP] 1110-1-18)

Quality Control. The overall system of technical activities that measures the attributes and performance of a process, item, or service against defined standards to verify that they meet the stated requirements. (EP 1110-1-18)

Quality Evaluation Program. A program which evaluates threat weapons and level of effort ordnance, collectively referred to as ordnance, in the in-service inventory to quantify current levels of safety, reliability and performance characteristics for ordnance and to identify changes in those characteristics.

Quantity-Distance. The quantity of explosives material and distance separation relationships which provide defined types of protection. These relationships are based on levels of risk considered acceptable for the stipulated exposures and are tabulated in the appropriate quantity-distance tables. Separation distances are not absolute safe distances but are relative protective or safe distances. Distances greater than those shown in the Table should be used wherever practicable.

QE. Quality Evaluation Program.

QE/PM. Quality Evaluation Program Manager.

Qualifications. A documented list of requirements an individual must satisfy prior to being certified; i.e., testing, formal classes, licenses, documented on-the-job training and experience, demonstrated task proficiency, physical, etc.

Quay. A marginal wharf of solid fill.

R

Radioactive Materials. Any material or combination of materials that spontaneously emits ionizing radiation. Radioactive materials are not within the scope and purpose of this publication.

Range Activities. Research, development, testing, and evaluation of military munitions, other ordnance, and weapons systems; and the training of members of the armed forces in the use and handling of military munitions, other ordnance, and weapons systems. (10 U.S.C. §101(e)(2)(A) and (B))

Range-Related Debris. Debris, other than munitions debris, collected from operational ranges or from former ranges (such as targets).

RAP. Rocket Assisted Projectile.

Rate of Detonation. Also called velocity of detonation, the speed at which the explosive reaction progresses through the explosive. In explosive charges, this rate is normally expressed in feet per second. It varies directly with the density of loading, all other factors being constant.

RATO. Rocket Assisted Take-Off.

RCL. Remote Control Locomotive.

RCRA. Resource Conservation and Recovery Act.

RDT&E. Research, Development, Test and Evaluation.

RDX. Cyclotrimethylene-Trinitramine (Cyclonite, Hexagen).

Ready Service Locker. A locker (usually small) used for the storage of small quantities of certain pyrotechnics, small arms ammunition, and minor hazard items of ammunition.

Ready Service Magazine. A magazine located in the magazine area (or near the weapon or area to be served aboard ship) and used for the temporary storage of restricted amounts of ammunition for emergency use; or in an operating line for limited amounts of explosives or components used in the production of ammunition.

Real Property. Land and/or facilities (including installed equipment) owned by or under the control of the DON or land where the DON is primarily responsible for conducting response actions.

Recondition. The process designed to correct defects or improve the performance of individual ammunition components which are not assembled in a complete round or subassembly.

REGCOM. Regional Command.

Relay. A relay is an element of a fuse explosive train which augments an outside, and otherwise inadequate, output of a prior explosive component to reliably initiate a succeeding train component. Relays, in general, contain a small single explosive charge, such as lead azide, and are not usually employed to initiate high explosive charges.

Remediation. The removal of pollutants or contaminants from environmental media such as soil, sediments, or water.

Render Safe Procedures. The portion of EOD procedures that involves the application of special disposal methods or tools to interrupt the functioning or otherwise defeat the firing train of UXO from triggering an unacceptable detonation.

Renovation. That work performed on ammunition, missiles, or rockets to restore them to a completely serviceable condition; usually involves the replacement of unserviceable or outmoded parts.

Repair. To prepare a damaged component or ammunition detail, such as a powder tank or an ammunition box, for reuse.

RESRB. Regional Explosives Safety Review Board.

Restricted Area. Any area, normally fenced, from which personnel, aircraft, or vehicles, other than those required for operations, are excluded for reasons of safety. Areas are designated as restricted areas in accordance with OPNAVINST 5530.14 (series).

Rework. As pertains to smokeless powder, rework is the process of grinding the grains of remnant lots of serviceable or obsolete powder for the recovery of certain ingredients, mainly the nitrocellulose, and producing of new lots of powder by addition of required ingredients and necessary processing.

RF. Radio Frequency.

RGN. Reactivity Group Numbers.

RH. Relative Humidity.

RI/FS. Remedial Investigation/Feasibility Study.

Robust Munitions. For purposes of determining Sensitivity Group, Robust Munitions are those hazard Class/Division 1.1 and 1.2 military munitions that meet two of the following criteria: 1) Have a ratio of the explosive weight to empty case weight less than 1; 2) Have a nominal wall thickness of at least 0.4 inches; 3) Have a case thickness/NEW1/3 greater than 0.05 in/lb1/3. Examples of Robust Munitions include 20 mm, 25 mm, and 30 mm cartridges, General Purpose (GP) bombs, artillery projectiles, and penetrator warheads. For purposes of determining case fragment distances for intentional detonations, Robust Munitions are those that meet the definition above, or meet the definition of Fragmenting Military Munitions. See Extremely Heavy Case Munitions and Fragmenting Military Munitions.

ROD. Rate of Detonation.

RODAP. Routine Ordnance Detonation Advisory Procedures.

Roll-on/Roll-off. The transfer of ammunition and explosives on wheeled conveyance into or from a waterborne conveyance (for example, barge, boat), such that the conveyance remains in a transportation mode through a transshipment point, with no lifting of the ammunition or conveyance.

RORO. Roll on/Roll off.

RP. Red Phosphorus.

Rpm. Revolutions per minute.

RPPM. Respiratory Protection Program Manager.

RS&I. Receipt, Segregation and Inspection.

RSS&I. Receipt, storage, segregation, and issue.

RSL. Ready Service Locker.

RSP. Render Safe Procedures.

RUC. Routing Unit Identification Code.

Runway. Any surface on land designated for aircraft take-off and landing operations, or a designated lane of water for take-off and landing operations of seaplanes.

S

Safe Haven. An area or location specifically approved by the Commanding Officer for emergency parking of commercial vehicles carrying military and military-sponsored shipments of explosives, hazardous materials, or other sensitive items endangered by civil disturbance or natural disaster.

Safe Working Load. The maximum static load (in pounds or kilograms) which can be lifted or handled by a piece of handling equipment such as slings, forklift trucks, beams, and similar handling equipment. The safe working load shall be marked on the lifting equipment. The terms “safe working load,” “capacity,” or “rated load” are considered synonymous.

SAFER. Safety Assessment for Explosives Risk.

Safety Distances. Safety distances are empirical distances in relation to quantities of explosives and are the minimum permitted for separation of facilities within a hazard area of possible explosions and for separations of the explosive hazard from inhabited buildings, passenger railroads, and public highways in order to control the magnitude of damage, loss of life, and serious injuries. Separation distances are not absolute safe distances but are relative protective or safe distances and must be graduated as to risk to provide for selected types of protection. See also Quantity Distance.

Safety Shoes. Specifically designated footwear of three general types:

a. Industrial safety shoes with hard toes or other resistive physical characteristics.

b. Spark-proof safety shoes containing no exposed metal for use in locations where friction sparks are hazardous; and

c. Conductive sole safety shoes used where static electricity or friction hazards are present.

Safety shoes can also consist of a combination of the above features.

Safety Tools. Tools constructed of wood, fiber, and other substances such as bronze, lead, K-Monel metal and beryllium alloys having low sparking characteristics and which will not produce sparks under normal conditions of use. The use of this type of tool is mandatory when hand tools are used in connection with certain explosives and ammunition operations, at which time they will be so specified. The use of this type of tool is not required in the absence of exposed explosives.

Saluting Charge. Similar to a propelling charge, but is loaded with a small quantity of black powder in lieu of smokeless powder. Used only for ceremonial saluting purposes.

SAR. Site Approval Request.

SCBA. Self-Contained Breathing Apparatus.

SCG. Storage Compatibility Group.

SCJ. Shaped Charge Jet.

SCO. Slow Cook-off.

Screening Smoke. A chemical agent which, when burned, hydrolyzed, or atomized produces an obscuring smoke; used to limit observation and reduce effectiveness of aimed fire. Screening smoke is not normally used for toxic effect against personnel.

Scuttling Site. An area of water specifically designated for positioning a ship for flooding or sinking under emergency situations.

SD. Safety Division, or Sympathetic Detonation.

SDR. Supply Discrepancy Report.

Secondary Explosives. Secondary explosives are generally less sensitive to initiation than primary explosives and are typically used in booster and main charge applications. A severe shock is usually required to trigger a reaction.

Secretarial Certification. Issued at the Secretary of the Navy level when a construction project cannot meet explosives safety criteria but must be constructed due to operational necessity. This form of certification is issued in lieu of a conventional site approval.

Secure Explosives Holding Area. An area designated for the temporary parking of commercial carriers' motor vehicles transporting DoW-owned AA&E.

Secure Non-Explosives Holding Area. An area designated for the temporary parking of commercial carriers' motor vehicles transporting Categorized DoW Arms, classified (SECRET or CONFIDENTIAL) materials, and CCI.

Segregation Facility. A building or series of buildings where fleet return material is screened and grouped by type and physical condition.

Sensitivity. Refers to the ability of an explosive to be initiated by an input of a limited amount of energy. Primary explosives require significantly less energy input to initiate than secondary explosives. The relative sensitivity of two explosives may vary depending on the type of energy input. For instance, one explosive may be relatively insensitive to impact but relatively sensitive to electrostatic discharge.

Sensitivity Group. A category used to describe the susceptibility of hazard Class/Division 1.1 and 1.2 military munitions to sympathetic detonation for the purpose of storage within a high performance magazine, or where ARMCO, Inc. revetments or substantial dividing walls are used to reduce the maximum credible event. Each hazard Class/Division 1.1 and 1.2 military munition is designated, based on its physical attributes, into one of five sensitivity groups, which are listed in the JHCS. The sensitivity groups are:

a. SG 1. Robust Military Munitions.

b. SG 2. Non-Robust Military Munitions.

c. SG 3. Fragmenting Military Munitions.

d. SG 4. Cluster Bomb/Dispenser Unit Military Munitions.

e. SG 5. Sympathetic Detonation Sensitive Military Munitions.

Sensitive Materials. Sensitive materials are weapons, ammunition and explosives vulnerable to theft and having a ready-sale potential in illicit markets, or having a ready use during civil disturbances. Sensitive materials include items such as rifles, grenades, pyrotechnics, and explosives.

Separated Ammunition. Ammunition in which the projectile and the cartridge case are two units that are usually loaded into the gun separately.

Separate-Loading Ammunition. Ammunition in which the projectile and charge are loaded into a gun separately.

Service Ammunition. Ammunition intended for combat rather than for training is classified as service ammunition. This ammunition has been approved for service use and contains explosives, pyrotechnics, or chemical filler, and the propellant, if required, is of service or reduced charge weight.

Service Explosives. High, initiating, or low explosives that are used principally and primarily in the loading, preparation, and assembly of ammunition of all types for the Armed Forces as contrasted by explosives for commercial use such as dynamite, blasting gelatin, black powders, or permissible explosives which are granulated or prepared for blasting, mining, and construction purposes.

Service Magazine. A building of an operating line used for the intermediate storage of ammunition and explosives.

SG. Sensitivity Group.

SGF2. Smoke Generated Fog Oil.

Shared Launch Facility. Any space or orbital launch facility that supports both DoW and non-DoW launch services and operations, as determined by service involved or by mutual agreement when multiple DoW military services are involved.

Ship or Barge Units. Combination of ammunition ships, barges or piers/wharves not separated from one another by the required distance to prevent propagation between units.

Signaling Smoke. Any type of smoke, usually colored, emitted from a hand or rifle grenade or from a pyrotechnic signal.

Single-Base Powder. A casting powder whose principal explosive ingredient is nitrocellulose.

Single-Chamber Storage Site. An excavated chamber with its own access to the natural ground surface, not connected to any other storage chamber.

Single Revetted Barricade. A mound which has been modified by a retaining wall, preferably of concrete, of such slope and thickness as to hold firmly in place the three feet width of earth required for the top with the earth at the natural angle on one side. All other requirements of a mound shall be applicable to the single revetted barricade.

Small Arms Ammunition. Ammunition, without projectiles that contain explosives (other than tracers), that is .50 caliber or smaller, or for shotguns.

Small Arms Range. A range that has been used exclusively for the expenditure of small arms ammunition.

SOF. Special Operations Forces.

SOFA. Status of Forces Agreement.

SOLAS. Safety of Life at Sea.

Solid Propellant. Explosives compositions used for propelling projectiles and rockets and to generate gases for powering auxiliary devices.

SOP. Standard Operating Procedure.

SP. Smokeless Powder.

Sparkproof. The term used to describe equipment which is so designed to ensure no flames or sparks will escape to the surrounding atmosphere from within its case or enclosure. Also referred to as spark-enclosed.

SPE. Site Plan Evaluation.

SPAWARSYSCOM. Space and Naval Warfare Systems Command.

Squib. A flame-producing device with no brisance, primarily used to ignite deflagrating materials such as propellant grains, black powder, metal-oxidant mixtures, or fuses.

SRF. Ship Repair Facility.

SSBN. Submarine Nuclear Ballistic Missile.

SSIC. Standard Subject Identification Code.

Stability. The ability of any ammunition or explosive to withstand adverse conditions and deterioration while in storage or use.

Stacks. Safe orderly groupings of explosives, ammunition, and related component parts in storage.

Standard Operating Procedure. A document which prescribes operator instructions in a definite course of action for processing a work unit. It is a tool for managing resources through planning and scheduling manpower, equipment, facilities and material in producing a quality product safely and efficiently. An SOP includes specifications, safety instructions and performance standards.

Static Motor Firing. Intentional ignition or initiation (via the design mode of ignition or initiation) of a motor (liquid or solid propellant) on a static test stand where the test item is restrained from becoming propulsive, or a static test stand where the test item is constrained to a defined path.

Static Test Stand. Locations where liquid propellant engines or solid propellant motors are tested in place.

Storage Compatibility. See Compatibility.

Storage Compatibility Group. The compatibility group for ammunition, explosives and/or other hazardous materials which can be stored together without significantly increasing the probability of accident or, for a given quantity, the magnitude of the effects of such an accident. The compatibility groups are based on the system recommended for international use by the United Nations Organization (UNO) and as adopted by the Department of Defense. Refer to NAVSEA SW020-AC-SAF-010 for the descriptions of each compatibility group.

Storehouses. Buildings assigned for the storage of inert ammunition components or ammunition details such as empty (unprimed) cartridge cases, empty (inert) projectiles, tanks, ammunition boxes, wads, plugs, raw silk, bomb fins, and other nonhazardous supplies and equipment.

Substantial Dividing Wall. An interior wall designed to prevent simultaneous detonation of explosives on opposite sides of the wall. However, such walls may not prevent propagation (depending on quantities and types of explosives involved).

Substructure. The portion of the wharf or pier construction which is located below the deck and including the deck.

Superstructure. The portion of the wharf or pier construction located above the deck.

Supervisor. Any employee, officer, and petty officer, designated by the Commanding Officer, Ordnance Officer, or other head of a department at a shore station to oversee and inspect personnel and employees and their operations.

Supplemental Documentation. Work Review Forms, Work Request Forms, Work Order Forms, Lab Review Forms, Mix Sheets, Batch Sheets, Test Plans, signed and witnessed notebooks, or any other local instruction or procedure which is supplemental to an SOP and specifies how specific operations are to be performed.

Support Facilities. Ammunition and explosives storage or operations which solely support the function of tactical or using units as distinguished from storage depots or manufacturing facilities.

Surveillance. An activity process to assure that ammunition, explosives, and energetic material received, stored, shipped or manufactured are safe, controlled, and disposed of when unsafe.

Suspect Cargo Site. A designated location for placing trucks and railcars containing ammunition or explosives that are suspected of being in a hazardous condition. These sites also are used for trucks and railcars that may be in a condition that is hazardous to their contents.

SUXOS. Senior Unexploded Ordnance Supervisor.

SWL. Safe Working Load.

SWOP. Special Weapons Ordnance Publication.

Sympathetic Detonation. The detonation of a munition or an explosive charge induced by the detonation of another munition or explosive charge.

Sympathetic Detonation Sensitive Military Munitions. Munitions for which HPM non-propagation walls are not effective. Military munitions are assigned to SG 5 when either very sensitive to propagation or the sensitivity has not been determined. See also Sensitivity Group.

T

T&E. Test and Evaluation.

TA. Terephthalic Acid.

Tactical Facilities. Prepared locations with an assigned combat mission, such as missile-launch facilities, alert aircraft parking areas or fixed-gun positions.

Taxiway. Any surface designated as such in the basic airfield clearance criteria specified by a DoW component publication or Federal Aviation Regulation (14 CFR §77).

TCRA. Time Critical Removal Action.

TDP. Technical Data Package.

Team Separation Distance. The distance that munitions response teams must be separated from each other during munitions response activities involving intrusive operations.

Technical Escort. Individuals technically qualified and properly equipped to accompany designated material requiring a high degree of safety and/or security during shipment.

Technology-Aided Surface Removal. A removal of UXO, DMM or CWM on the surface (that is, the top of the soil layer) only, in which the detection process is primarily performed visually, but is augmented by technology aids (such as, hand-held magnetometers or metal detectors) because vegetation, the weathering of UXO, DMM or CWM, or other factors make visual detection difficult.

TGA. Thermogravimetric Analysis.

TH. Thermate, Thermite.

Threshold Limit Value. The concentration of a substance in air above which repeated (daily) exposure may cause adverse effects in personnel. The term is synonymous with maximum allowable concentration or maximum permissible concentration.

Time Critical Removal Action. Removal actions where, based on the site evaluation, a determination is made that a removal is appropriate, and that less than six months exists before on-site removal activity must begin. (40 CFR §300.5)

TLV. Threshold Limit Value.

TNT. Trinitrotoluene.

TNT Equivalent. Considering the peak overpressure produced by detonation of a given weight of TNT as 100%, the TNT equivalency of an explosive is the amount of overpressure produced by detonation of an identical quantity of propellant under comparable conditions, expressed as a percentage.

"Top-Off". In explosive loading, a "top-off" operation is the addition of explosive to a casing or round to fill cavities created by the cooling and shrinkage of molten explosives. For ships, it is the loading of a small amount of ammunition to complete the ship's allowance of items (projectiles, propelling charges, etc.).

Toxic Chemical Agent. A toxic chemical that may be used effectively in field concentrations to produce injury or death. Toxic chemical ammunition are classified tactically as casualty agents.

Toxic Chemicals. Toxic chemicals are defined by the Department of Transportation according to the degree of poisonous hazard in transportation. These classifications used by the Navy for transportation purposes and equally applicable for handling and storage of chemical ammunition and chemical ammunition, are as follows:

a. Class A, Extremely Dangerous Poisons. Poisonous gases or liquids of such nature that a very small amount of the gas or vapor of the liquid mixed with air is dangerous to life.

b. Class B, Less Dangerous Poisons. Substances, liquids or solids (including pastes and semi-solids), other than Class A poisons or irritant materials, which are known to be so toxic to man as to

afford a hazard to health during transportation or which, in the absence of adequate data on human toxicity, are presumed to be toxic to man because of the effect they produce on laboratory animals under certain controlled conditions.

c. Irritating Substances. Liquid or solid substances which upon contact with fire or when exposed to air give off dangerous or intensely irritating fumes. This category does not include any Class A poisonous articles.

Toxicity. The property possessed by a material which enables it to injure the physiological mechanism of an organism by chemical means, with the maximum effect being death.

TP. Target Practice.

TPC. Third Party Certification.

Transfer Depot. A permanent facility used to transfer ammunition and explosive between automotive vehicles and railcars for further shipment, or for delivery to a storage magazine or loading building.

Tray. A wood or metal platform, with sideboards, upon which cargo is placed so that the cargo and tray may be moved as a unit.

Triboelectricity. Electricity generated by friction.

Truck Holding Yard. A location where trucks containing ammunition or explosives are held for interim periods of time prior to storage or shipment.

TSD. Team Separation Distance.

TWA. Time Weighted Average.

U

UDMH. Unsymmetrical Dimethyl Hydrazine.

UIC. Unit Identification Code.

UL. Underwriters' Laboratories.

Unbarricaded. No effective barricade between magazines, operating buildings, stacks, or other buildings opposed one to another.

Underground Storage. Storage in a cavern or chamber storage site provided that, in case of an accidental explosion in the storage site, the overhead cover does not fail and all exterior hazardous effects are limited to blast and debris from the entrance.

Unexploded Ordnance. Military munitions that (a) have been primed, fused, armed, or otherwise prepared for action; (b) have been fired, dropped, launched, projected, or placed in such a manner as to constitute a hazard to operations, installations, personnel, or materiel; and (c) remain unexploded either by malfunction, design, or any other cause. (10 U.S.C. §101(e)(5)(A) through (C))

Unit of Powder. An increment of an index of smokeless powder obtained from ammunition breakdown.

Unit Risk. The risk to personnel and/or facilities that is associated with debris, fragment and/or blast hazards that is the result of the detonation of a single round of ammunition.

UNO. United Nations Organization.

Unserviceable Ammunition. Ammunition reclassified to unserviceable because of a change in expected service or shelf life, or due to deterioration or damage. Unserviceable ammunition is identified by:

a. NAVSEASYSCOM through issue of Notices of Ammunition Reclassification and NAVSUP P-801, "Ammunition Unserviceable, Suspended and Limited Use."

b. Inspection which may reveal defective ammunition such as:

(1) Improper seating of fuze in rocket warheads.

(2) Warheads which are cracked, dented, bent and with recesses which are corroded.

(3) Ruptured missile seeker heads.

(4) Dented or deformed pyrotechnics.

(5) Leaking chemical ammunition.

(6) Exudate of leakages from ammunition item.

c. Reports of ammunition or components dropped five feet or more (two feet for RAP).

US. United States.

USDAO. U.S. Defense Attaché Office.

USNS. United States Navy Ship (civilian manned).

USW (A&S). Office of the Under Secretary of War for Acquisition and Sustainment.

UXO. Unexploded Ordnance.

UXO-Qualified Personnel. Personnel who have performed successfully in military EOD positions, or are qualified to perform in the following Department of Labor, Service Contract Act, Directory or Occupations, contractor positions: UXO Technician II, UXO Technician III, UXO Safety Officer, UXO Quality Control Specialist, or Senior UXO Supervisor.

UXOSO. UXO Safety Officer.

UXO Technicians. Personnel who are qualified for and filling Department of Labor, Service Contract Act, Directory of Occupations, contractor positions of UXO Technician I, UXO Technician II, and UXO Technician III.

V

V. Volt.

Vacuities. Empty spaces or cavities.

Vapor Pressure. The mean force in psi (absolute) exerted by the gas or vapor from a liquid on the surroundings.

Vdc. Volts direct current.

Velocity of Detonation. See Rate of Detonation.

Venting. Exposing any internal cavities of MPPEH, to include training or practice munitions (such as concrete bombs), using DWESO- or NOSSA-approved procedures, to confirm that an explosive hazard is not present.

VLS. Vertical Launching System.

VT. Variable Time.

VTS. Vacuum Thermal Stability.

VX. V-Agent.

W

Waiver. Written authority which provides a temporary exception and permits deviation from a mandatory requirement of this manual. It is generally granted for short periods of time pending cancellation as a result of termination of scheduled work commitments or correction of the waived conditions.

Warhead. That part of a missile, projectile, torpedo, rocket, or other munition which contains either the nuclear or thermonuclear system, high-explosive system, chemical filler or inert material intended to inflict damage. RAP projectiles and rocket heads without motors are designated as warheads.

Waste Military Munition. A military munition is a “waste” if it is either a solid or hazardous waste under regulations implementing (42 U.S.C. §9601 et. seq.) or defined as a waste under the Navy or Marine Corps activity’s formal written policies and procedures. In general:

a. An unused military munition is a solid waste when any of the following occurs:

(1) The munition is abandoned by being disposed of, burned, detonated (except during intended use), incinerated, or treated prior to disposal, or

(2) The munition is removed from storage in a military magazine or other storage area for the purpose of being disposed of, burned or incinerated, or treated prior to disposal, or

(3) The munition is deteriorated or damaged (e.g., the integrity of the ammunition is compromised by cracks, leaks, or other damage) to the point that it cannot be put into serviceable condition, and cannot reasonably be recycled or used for other purposes, or

(4) An authorized military official has declared the munition a solid waste.

b. A used or fired military munition is a solid waste:

(1) When transported off-range or from the site of use, where the site of use is not a range, for the purposes of storage, reclamation, treatment, disposal, or treatment prior to disposal; or

(2) If recovered, collected, and then disposed of by burial, or landfilling either on or off a range.

c. For purposes of RCRA section 1004(27), a used or fired military munition is a solid waste, and therefore is potentially subject to RCRA corrective action authorities under section 3004(u) and (v), and section 3008(h), or imminent and substantial endangerment authorities under section 7003, if the munition lands off-range and is not promptly rendered safe and/or retrieved. Any imminent and substantial threats associated with any remaining material must be addressed. If remedial action is not feasible, the operator of the range must maintain a record of the event for as long as any threat remains. The record must include the type of munition and its location (to the extent the location is known). For further clarification see 40 CFR §266.202 under definition of solid waste.

Water-Activated Material. Material which reacts violently upon mixture with water.

Water Reactive Material (Solid). Any solid substance (including sludges and paste) which, by interaction with water, is likely to become spontaneously flammable or to give off flammable or toxic gases in dangerous quantities.

Weapon System. A munition and those components and equipment required for its operation and support.

Weatherproof. The term used to describe equipment so constructed or protected that exposure to the weather will not interfere with its successful operation. Raintight or watertight equipment may not fulfill the requirements for a weatherproof enclosure. Consideration should be given to conditions resulting from snow, ice, dust and temperature extremes.

Wharf. A landing place or platform built out into the water or along the shore for the berthing of vessels.

Wharf Yard. A yard that is close to the piers or wharves in which railcars or trucks are held for short periods of time, prior to delivery to the piers or wharves.

WMM. Waste Military Munition.

WP. White Phosphorus.

WR. Weapons Requirement.

WSE. Weapons Support Equipment.

WSESRB. Weapon System Explosives Safety Review Board.

Y

YD. Non-Self-Propelled Floating Crane.

THIS PAGE INTENTIONALLY BLANK

APPENDIX B
REFERENCE DOCUMENTS

B-1. GENERAL.

This appendix contains all the publications referenced in this manual, as well as publications which may provide further information on explosives safety matters.

B-2. NAVAL INVENTORY CONTROL POINT.

The publications and instructions in this section are available from the Defense Distribution Depot Susquehanna Pennsylvania, Building 05, 5450 Carlisle Pike, Mechanicsburg, PA 17055-0789. Publications must be ordered in accordance with NAVSUP Publication 600, "Naval Logistics Library User Guide." These documents, where applicable, can be accessed from the internet address following each title.

B-2.1. DEPARTMENT OF DEFENSE (DOD) (ALSO KNOWN AS DEPARTMENT OF WAR (DOW)).

B-2.1.1. DoD Directives. Available online via the Washington Headquarters Services website at https://www.esd.whs.mil

5000.01, The Defense Acquisition System

5160.65, Single Manager for Conventional Ammunition (SMCA)

B-2.1.2. DoD Instructions. Available online via the Washington Headquarters Services website at https://www.esd.whs.mil

4140.62, Material Potentially Presenting an Explosive Hazard (MPPEH)

5160.68, Single Manager for Conventional Ammunition (SMCA)

B-2.1.3. DoD Manuals. Available online via the Washington Headquarters Services website at https://www.esd.whs.mil

4140.72, Management of Material Potentially Presenting an Explosive Hazard

4145.26, DoD Contractors' Safety Manual for Ammunition and Explosives

4160.21, Defense Materiel Disposition Manual

4160.28, Defense Demilitarization Manual

4715.26, DoD Military Munitions Rule (MR) Implementation Procedures

~~6055.09, DoD Ammunition and Explosives Safety Standards~~
Note: Replaced by DESR 6055.09

S-5210.41 Vol 1, Nuclear Weapons Security Manual: The DoD Nuclear Weapon Security Program

B-2.1.4. DoD Memoranda.

Deputy Secretary of Defense, "DoD Enduring Location Master List (S)", (latest issuance)

B-2.1.5. DoD Regulations.

4145.19-R-1, Storage and Materials Handling

B-2.1.6. DoD Standards. Available online via the Assist database at https://assistca.dla.mil/

2101 Classification of Characteristics

B-2.1.7. Department of War Explosives Safety Office (formerly known as the DoD Explosives Safety Board). Available online via the DoD Environment, Safety and Occupational Health Network and Information Exchange at https://denix.osd.mil/

B-2.1.7.1. Technical Papers.13, Prediction of Building Debris for Quantity-Distance Siting

15, Approved Protective Construction

16, Methodologies for Calculating Primary Fragment Characteristics

18, Minimum Qualifications for Unexploded Ordnance (UXO) Technicians and Personnel

B-2.1.7.2. Explosives Safety Regulation.

Defense Explosives Safety Regulation (DESR) 6055.09
Note: Replaces DoD 6055.09-M

B-2.1.8. Unified Facilities Criteria (UFC) Documents. Available online from the Whole Building Design Guide website at http://www.wbdg.org.

3-230-01, Water Storage, Transmission, and Distribution

3-260-01, Airfield and Heliport Planning and Design

3-260-02, Pavement Design for Airfields

3-340-02, Structures to Resist the Effects of Accidental Explosions

3-460-01, Petroleum Fuel Facilities

3-520-01, Interior Electrical Systems

3-520-05, Stationary and Mission Batteries

3-600-01, Fire Protection Engineering for Facilities

3-601-02, Fire Protection Systems Inspection, Testing, And Maintenance

B-2.1.9. Allied Ordnance Publications. Available from the Defense Logistics library at http://quicksearch.dla.mil/

AOP-7, , Manual of Tests for Qualification of Explosive Materials for Military Use

AOP-39, Guidance on the Development, Assessment, and Testing of Insensitive Munitions

B-2.2. ORGANIZATION OF THE JOINT CHIEFS OF STAFF AND JOINT STAFF.

B-2.2.1. Chairman, Joint Chiefs of Staff Instructions (CJCSI). Available online via the Joint Chiefs of Staff website at https://www.jcs.mil/

4360.01, Explosives Safety and Munitions Risk Management for Joint Operations Planning, Training, and Execution

B-2.3. OFFICE OF THE SECRETARY OF THE NAVY (SECNAV).

B-2.3.1. SECNAV Instructions. Available online at the Department of the Navy Issuances website at https://www.secnav.navy.mil/doni/default.aspx

5510.36, Department of the Navy Information Security Program

11011.47, Acquisition, Management and Disposal of Real Property and Real Property Interests by the Department of the Navy

B-2.4. OFFICE OF THE CHIEF OF NAVAL OPERATIONS (OPNAV).

B-2.4.1. OPNAV Instructions. Available online at the Department of the Navy Issuances website at https://www.secnav.navy.mil/doni/default.aspx

3500.39, Operational Risk Management (ORM)

3770.2, Airspace Procedures and Planning Manual

3900.25, Major Range and Test Facility Base

4790.2, Naval Aviation Maintenance Program (NAMP)

5090.1, Environmental Readiness Program Manual

5100.23, Navy Safety and Occupational Health Program Manual

5102.1, Mishap Investigation and Reporting

5530.13, Department of the Navy Physical Security Instruction for Conventional Arms, Ammunition and Explosives (AA&E)

5530.14, Navy Physical Security and Law Enforcement Program

5585.2, Department of the Navy Military Working Dog (MWD) Program

8020.14, Department of the Navy Explosives Safety Policy

8023.24, Navy Personnel Ammunition and Explosives Handling Qualification and Certification (Qual/Cert) Program

11320.23, Shore Activities Fire Protection and Emergency Services Program

B-2.5. NAVAL AIR SYSTEMS COMMAND (NAVAIRSYSCOM).

B-2.5.1. NAVAIR Publications. Available online via the Naval Air Technical Data and Engineering Service Center at https://mynatec.navair.navy.mil/

11-100-1.1, Technical Manual for Cartridge and Propellant Actuated Devices

11-140-25, Armament Weapons Support Equipment Configuration Manual (Organizational and Intermediate Maintenance Activities)

17-1-127, Periodic Proofload Testing of Weapons Support Equipment

B-2.6. NAVAL FACILITIES ENGINEERING SYSTEMS COMMAND (NAVFAC).

B-2.6.1. NAVFAC Publications. Available online at https://flankspeed.sharepoint-mil.us/sites/NAVFAC-HQ

P-300, Management of Civil Engineering Support Equipment

P-307, Maintenance and Certification Management of Weight Handling Equipment

B-2.7. BUREAU OF MEDICINE AND SURGERY (BUMED).

B-2.7.1. NAVMED Publications. Available online via the Navy Medicine website at https://www.med.navy.mil/

P-117, Manual of the Medical Department for the U.S. Navy

B-2.8. NAVAL ORDNANCE SAFETY AND SECURITY ACTIVITY (NOSSA).

B-2.8.1. NOSSA Instructions. Available online from the NOSSA Web Site at https://nossa.dc3n.navy.mil

8020.14, Navy Shore Station Explosives Safety Management Program

8020.15, Explosives Safety Review, Oversight, and Verification of Munitions Responses

8020.20, Regional Explosives Safety Review Board

8020.22, Explosives Safety Site Approval Documentation Requirements: Submittal, Review, Approval, and Oversight

8020.24, Configuration Management Charter for NAVSEA Ordnance Pamphlet 5, Ammunition and Explosives Safety Ashore

8023.11, Standard Operating Procedures Development, Implementation and Maintenance for Ammunition and Explosives

B-2.8.2. NOSSA Manuals. Available online from the NOSSA Web Site at https://nossa.dc3n.navy.mil

M-8020.1, Navy Shore Station Explosives Safety Management Program

B-2.9. NAVAL SEA SYSTEMS COMMAND (NAVSEASYSCOM).

B-2.9.1. NAVSEA Instructions. Available online via iNAVSEA at https://navsea.navy.deps.mil

8020.5, Qualification and Final (Type) Qualification Procedures for Navy Explosives (High Explosives, Propellants, Pyrotechnics and Blasting Agents)

8020.6, Department of the Navy Weapon System Explosives Safety Review Board

8020.8, DoD Ammunition and Explosives Hazard Classification Procedures

B-2.9.2. NAVSEA Ordnance Documents (OD).

10773, Safety Principles for Operations Involving Electro-Explosive Devices

B-2.9.3. NAVSEA Ordnance Pamphlets (OP).

4, Ammunition and Explosives Safety Afloat

~~5 Volume 3, Ammunition and Explosives Safety Ashore for Contingencies, Combat Operations, Military Operations Other than War, and Associated Training~~
Note: OP 5 Volume 3 is now chapter 15 of this manual

2173, Approved Handling Equipment for Weapons and Explosives (2 volumes)

3221/TM 55-607, Loading and Stowage of Military Ammunition and Explosives Aboard Breakbulk Merchant Ships

3565/NAVAIR 16-1-529, Electromagnetic Radiation Hazards (U) (2 volumes)

B-2.9.4. NAVSEA Ordnance Requirements (OR).

99 (series), Intermediate and Depot Maintenance Instructions

B-2.9.5. NAVSEA Technical Manuals.

S6340-AA-MMA-010, OTTO Fuel II, Safety, Storage and Handling Instructions

S6470-AA-SAF-010, Naval Maritime Confined Space Program

SG420-AP-MMA-010, Periodic Testing Arrangements for Ordnance Handling Equipment

SW010-AB-GTP-010, United States Navy Ammunition, Historical and Functional Data

SW010-AG-ORD-010, List of Explosives for Navy Munitions

SW020-AC-SAF-010, Transportation and Storage Data for Ammunition, Explosives, and Related Hazardous Materials

SW020-AD-SAF-010, Explosives Safety Accidents and Lessons Learned

SW020-AE-SAF-010, Safety Surveillance of Navy Gun Propellant, Policy and Procedures

SW020-AG-SAF-010, Navy Transportation Safety Manual for Ammunition, Explosives, and Related Hazardous Materials

SW020-AH-SAF-010, Weapon System Safety Guidelines Handbook

SW023-AG-WHM-010, On-Station Movement of Ammunition and Explosives by Motor Vehicle

SW023-AH-WHM-010, Handling Ammunition and Explosives with Industrial Material Handling Equipment (MHE)

SW050-AB-MMA-010, Pyrotechnic Screening, Marking, and Countermeasure Devices

SW060-AA-MMA-010, Demolition Materials

SW073-AC-MMA-010, Miscellaneous Chemical Munitions

SW394-EE-PRO-010, VLS Canister Dockside Handling Procedures

B-2.10. NAVAL AIR SYSTEMS COMMAND (NAVAIRSYSCOM).

B-2.10.1. NAVAIR Technical Manuals.

11-140-5, Airborne Weapons Assembly Manual MK 80/BLU Series General Purpose Bombs, MK 77 Fire Bombs And Practice Bombs Fleet Maintenance Activities

11-140-9, Airborne Weapons Assembly Manual Cluster Bombs Units Fleet Maintenance Activities

11-140-12, Airborne Weapons Assembly Manual Aircraft Rocket Systems 2.75-Inch And 5.0-Inch Organizational, Intermediate, Depot Maintenance Activities

11-1F-2, Description And Characteristics Airborne Bomb And Rocket Fuze Manual

B-2.11. NAVAL SUPPLY SYSTEMS COMMAND (NAVSUPSYSCOM).

B-2.11.1. NAVSUP Publications. Available online via the Naval Logistics Library at https://my.navsup.navy.mil

P-724, Conventional Ordnance Management Policy and Procedures (Volume I, Ashore and Volume II, Afloat)

P-801, Ammunition Unserviceable, Suspended and Limited Use

P-805, Receipt, Segregation, Storage, Issue and Fleet Sentencing

B-3. STANDARDIZATION DOCUMENT ORDER DESK.

The following military handbooks and other standardization documents are available from the Standardization Document Order Desk, Building 4D, 700 Robbins Avenue, Philadelphia, PA 19111-

5094. Some military handbooks have been converted to Unified Facilities Criteria (UFC) documents. See paragraph B-2.1.8

B-3.1. MILITARY STANDARDS.

B-3.1.1. DoD/DoW Military Standards. Available online via the Assist database at https://assistca.dla.mil

129, Military Marking for Shipment and Storage

286, Propellants, Solid, Sampling, Examination and Testing

398, Shield, Operational for Ammunition Operations, Criteria for Design of and Tests for Acceptance

882, Standard Practice for System Safety

1316, Fuze Design, Safety Criteria for

1320, Designing Unit Loads, Truckloads, Railcar Loads, and Intermodal Loads for Ammunition and Explosives

2105, Hazard Assessment Tests for Non-Nuclear Munitions

B-3.1.2. Navy Military Standards. Available online via the Assist database at https://assistca.dla.mil

1320, Truckloading of Ammunition and Explosives

1322, Unit Loads of Ammunition and Explosives for Domestic and Overseas Shipments

1323, Unit Loads of Ammunition and Explosives for Underway Replenishment

B-3.1.3. Military Handbooks. Available online via the Assist database at https://assistca.dla.mil

274, Electrical Grounding for Aircraft Safety

419, Grounding, Bonding and Shielding for Electronic Equipment and Facilities

B-3.1.4. Military Specifications. Available online via the Assist database at https://assistca.dla.mil

MIL-B-2427, Box, Ammunition Packing, Wood, Nailed

MIL-C-43122, Cloth, Sateen, Cotton, Flame Retardant Treated

MIL-DTL-14610, Coveralls, Explosives Handlers

MIL-DTL-23659, Initiators, Electric, General Design Specification for

MIL-DTL-46506, Boxes, Ammunition Packing, Wood, Wirebound

MIL-PRF-81705, Barrier Materials, Flexible, Electrostatic Free Heat Sealable

B-4. DEPARTMENT OF THE ARMY.

Requests for Army publications should be directed to U.S. Army Adjutant General, Publications Center, 2800 Eastern Boulevard, Baltimore, MD 21220.

B-4.1. US ARMY CORPS OF ENGINEERS.

EP 1110-1-18, Ordnance and Explosives Response

B-4.2. ARMY TECHNICAL MANUALS.

9-1300-251-20&P, Unit Maintenance Manual (Including Repair Parts and Special Tools List) Artillery Ammunition for Guns, Howitzers, Mortars, Recoilless Rifles, and 40mm Grenade Launchers

9-1305-201-20&P, Organizational Maintenance Manual Including Repair Parts and Special Tools List for Small Arms Ammunition to 30MM Inclusive (FSC 1305)

9-1330-200-12, Operator's and Organizational Maintenance Manual for Grenades (TM-1330-12/1A)

9-1330-200-34, Maintenance Manual Direct Support and General Support for Grenades

9-1370-203-34&P, Direct Support And General Support Maintenance Manual For Military Pyrotechnics
Replaced by TM 9-1370-203-34

9-1375-213-12-1, Operator's and Organizational Maintenance Manual (Including Repair Parts and Special Tools List) for Demolition Materials; Demolition Kit Cratering; M180 and Demolition Kit, Cratering Training; M270 (Inert)

9-1375-213-34&P, Direct Support and General Support Maintenance Manual (Including Repair Parts and Special Tools List) for Demolition Material

B-4.3. ARMY TECHNICAL MANUAL DATA SHEETS.

43-0001-28.3, Technical Manual Data Sheets for Guns, Howitzers, and Mortars Interoperable Ammunition

B-5. MARINE CORPS (MARCOR).

Requests for Marine Corps publications should be directed to CMC (ARD), Washington, D.C. 20380. Additionally, an index of Marine Corps publications is available at http://www.marines.mil

B-5.1. MARCOR ORDERS (MCO).

3550.9, Operational Training Range Certification/Recertification Program

3571.2, Explosive Ordnance Disposal (EOD) Program

3750.1, Range Safety

P4400.151, Intermediate-Level Supply Management Policy Manual

4400.201-V7, Management of Property in the Possession of the Marine Corps; Ammunition and Explosives

5100.29, Marine Corps Explosives Safety Management Program (ESMP)
Note: Replaces 8020.10, Marine Corps Ammunition Management and Explosives Safety Policy Manual, and 5102.1, Navy and Marine Corps Mishap and Safety Investigation Reporting and Record Keeping Manual.

~~P5102.1, Navy and Marine Corps Mishap and Safety Investigation Reporting and Record Keeping Manual~~
Note: Replaced by MCO 5100.29

5585.5, Marine Corps Military Working Dog Manual

5530.14, Physical Security Program

8020.1, Handling, Transportation, Storage, Reclassification and Disposal of Class V (W) Materiel

~~P8020.10, Marine Corps Ammunition Management and Explosives Safety Policy Manual~~
Note: Replaced by MCO 5100.29

~~8023.3, Personnel Qualification and Certification Program for Class V Ammunition and Explosives~~
Note: Replaced by MCO 5100.29

8020.14, Marine Corps Explosives Safety Compliance Program

~~11240.66, Standard Licensing Policy for Operators of Military Motor Vehicles~~
Note: Replaced by MCO 11240.118

11240.118, Licensing Program for Tactical Wheeled Motor Transport Equipment Operators

B-5.2. MC BULLETINS (MCBUL).

~~MCBul 8011, Class V (W) Materiel Allowances for Training, Programmed Testing and Security~~

B-5.3. MC DIRECTIVES.

NAVMC Directive 3500.66, Explosive Ordnance Disposal Technician/Officer Training and Readiness Manual (EOD T&R Manual)

B-6. DEPARTMENT OF HOMELAND SECURITY.

B-6.1. U.S. COAST GUARD.

Guideline for USCG Approval of SOLAS Pyrotechnics Signals and Line-Throwing Appliances

B-7. SUPERINTENDENT OF DOCUMENTS.

B-7.1. CODE OF FEDERAL REGULATIONS. Available online at ecfr.org

14 CFR 77, Objects Affecting Navigable Airspace

29 CFR 1910, Occupational Safety and Health Standards

40 CFR 260, Hazardous Waste Management System: General

40 CFR 261, Identification and Listing of Hazardous Waste

40 CFR 262, Standards Applicable to Generators of Hazardous Waste

40 CFR 264, Standards for Owners and Operators of Hazardous Waste Treatment, Storage and Disposal Facilities

49 CFR 171, General Information, Regulations and Definitions

49 CFR 172, Hazardous Materials Tables and Hazardous Materials Communications Regulations

49 CFR 173, Shippers - General Requirements for Shipments and Packaging

49 CFR 174, Carriage by Rail

49 CFR 175, Carriage by Aircraft

49 CFR 176, Carriage by Vessel

49 CFR 177, Carriage by Public Highway

49 CFR 178, Specifications for Packaging

49 CFR 179, Specifications for Tank Cars

B-7.2. UNITED STATES CODE. Available online at https://uscode.house.gov/

10 U.S.C. 101, Definitions

10 U.S.C. 2710, Inventory of Unexploded Ordnance, Discarded Military Munitions and Munitions Constituents at Defense Sites (other than Operational Ranges)

42 U.S.C. 11001-11022, Public Law 99-499, Title III, Emergency Planning and Community Right-to-Know Act Of 1986 (EPCRA)

B-8. BUREAU OF EXPLOSIVES (BOE).

The following publication is published by the Bureau of Explosives, 50 F Street, NW., Washington D.C. 20001.

B-8.1. BOE TARIFF.

BOE-6000, Hazardous Materials Regulations of the Department of Transportation

B-9. NORTH ATLANTIC TREATY ORGANIZATION (NATO).

STANAG 4240, Liquid Fuel/External Fire, Munitions Test Procedures

STANAG 4241, Bullet Impact, Munitions Test Procedures

STANAG 4382, Slow Heating, Munitions Test Procedures

STANAG 4396, Sympathetic Reaction, Munitions Test Procedures

STANAG 4439, Policy for Introduction, Assessment, and Testing for Insensitive Munitions

STANAG 4496, Fragment Impact, Munitions Test Procedures

STANAG 4526, Shaped Charge Jet, Munitions Test Procedures

B-10. UNITED STATES TRANSPORTATION COMMAND (USTRANSCOM).

4500.9-R, Defense Transportation Regulations

B-11. AMERICAN NATIONAL STANDARDS INSTITUTE (ANSI).

The following standards can be obtained from American National Standards Institute, 1430 Broadway, New York, NY 10018; Telephone (212) 642-4900.

B-11.1. ANSI STANDARDS. Available online at ansi.org

A14.3, Safety Requirements for Fixed Ladders

Z9.2, Fundamentals Governing the Design and Operation of Local Exhaust Systems

Z9.3, Safety Code for Design, Construction and Ventilation of Spray Finishing Operations

Z89.1, Personnel Protection - Protective Headwear for Industrial Workers

Z358.1, American National Standard for Emergency Eyewash and Shower Equipment

Z88.2, Practices for Respiratory Protection

B-11.2. ANSI SPECIFICATIONS. Available online at Ansi.org

ANSI/EIA-649, National Consensus Standard for Configuration Management

B-12. AMERICAN SOCIETY OF MECHANICAL ENGINEERS (ASME).

The following documents can be obtained from the American Society of Mechanical Engineers, United Engineering Center Building, 345 East 47th Street, New York, NY 10017; Telephone (212) 705-7722.

ASME Boiler and Pressure Vessel Code, Section VIII, Rules for Construction of Pressure Vessels, Division 1/Division 2

B-13. AMERICAN SOCIETY FOR TESTING AND MATERIALS (ASTM).

The following standards are available from ASTM International, 100 Barr Harbor Drive, P.O. Box C700, West Conshohocken, PA 19428-2959 or visit their website at http://www.astm.org/.

ASTM Standard F2412-05, Standard Test Methods for Foot Protection

ASTM Standard F2413-05, Standard Specification for Performance Requirements for Foot Protection

ASTM Standard E119-20 – Standard Test Methods for Fire Tests of Building Construction and Materials

B-14. NATIONAL FIRE PROTECTION ASSOCIATION (NFPA).

The following NFPA documents can be obtained from National Fire Protection Association, Batterymarch Park, Quincy, MA 02269. They are also available online at https://www.nfpa.org.

10, Portable Fire Extinguishers

13, Standard for the Installation of Sprinkler Systems

20, Centrifugal Fire Pumps

25, Inspection, Testing, and Maintenance of Water-Based Fire Protection Systems

30, Flammable and Combustible Liquids Code

33, Spray Finishing

45, Fire Protection for Laboratories Using Chemicals

50, Standard for Bulk Oxygen Systems at Consumer Sites

70, National Electrical Code

77, Recommended Practice on Static Electricity

80, Fire Doors and Other Opening Protectives

90A, Air Conditioning and Ventilating Systems

91, Standard for Exhaust Systems for Air Conveying of Vapors, Gases, Mists, and Noncombustible Particulate Solids

101, Life Safety Code

~~251, Standard Methods of Tests of Fire Resistance of Building Construction and Materials~~ Replaced by ASTM Standard E119-20

307, Construction and Fire Protection of Marine Terminals, Piers and Wharves

430, Code for the Storage of Liquid and Solid Oxidizers

780, Installation of Lightning Protection Systems

B-15. OTHER REFERENCED DOCUMENTS.

B-15.1. JAMES G. BIDDLE INSTRUMENTS.

Manual 25Ta "Getting Back to Earth": Manual on Earth Resistance Testing.

B-15.2. CHEMICAL PROPULSION INFORMATION AGENCY (CPIA).

Hazards of Chemical Rockets and Propellants Handbook.

B-15.3. CHEMICAL SYSTEMS LABORATORY.

ARC SL-TR-81092, Development and Application of a Gas Chromatographic Method for the Determination of Lewisite Emissions During Incineration of Obsolete Chemical Agent Identification Sets.

B-15.4. INSTITUTE OF ELECTRICAL AND ELECTRONICS ENGINEERS.

Standard 142: Grounding of Industrial and Commercial Power Systems (IEEE Green Book).

B-15.5. JOINT SERVICE EXPLOSIVES SAFETY COUNCIL.

Joint Conventional Ammunition Policies and Procedures (JCAPP)

THIS PAGE INTENTIONALLY BLANK

APPENDIX C
EXPLOSIVES SAFETY TRAINING PROGRAM

C-1. GENERAL.

This appendix provides the Department of the Navy's (DON) explosives safety training requirements.

C-2. PERSONNEL REQUIREMENTS.

C-2.1. MILITARY PERSONNEL. Military personnel (active and reserve duty) assigned to shore station positions involving responsibilities for ammunition and explosives should attempt to complete the applicable explosives safety training prior to reporting.

C-2.2. CIVILIAN PERSONNEL. Civilians (including contractors) assigned to positions involving responsibilities for ammunition and explosives shall have the applicable explosives safety training. It is the responsibility of the activity to consult with legal personnel to ensure that the explosives safety training for contractors is specifically documented in the contract if a condition of employment is specified.

C-2.3. ALL PERSONNEL. All personnel, unless otherwise noted, shall be scheduled to complete, or have completed, the training within 6 months of reporting.

C-3. COURSE DESCRIPTIONS/AVAILABILITY.

Course descriptions, lengths, and availability are described below. Course location is noted as follows: Defense Ammunition Center (DAC) McAlester, OK; DAC On-Site or local activity; Navy e-Learning (NeL) Web-Based Training (WBT) Distance Learning (DL); Naval Education and Training Command, Naval Air Station, Pensacola, FL; Army Ordnance Munitions and Electronics Maintenance School, Marine Element, Redstone Arsenal, AL; Equivalent; or Local Instructor. Eligibility requirements are based on actual duties being performed and not on the job title or pay grade. Contractor employees in support of DON contracts are authorized to attend DAC classes. All "AMMO" courses are in the process of being assigned new course numbers, which are provided in the subparagraphs below where appropriate. All online (distance learning) AMMO courses are in the process of transitioning from Army Knowledge Online (AKO) to Navy e-Learning (NeL). Updates to transition progress will be available on the NOSSA website, https://nossa.dc3n.navy.mil, Explosives Safety Training webpage.

a. Basic Explosives Safety. The following courses have been designated to satisfy the basic explosives safety training requirements for personnel ashore. These courses have been developed around two general job functions so that some degree of customizing could be accomplished. The requirement to complete more than one of these courses due to a position change is at the discretion of the immediate supervisor/reporting senior. There are explosives Safety Training Courses in both the Navy and Marine Corps training platforms that fulfill the requirements of this appendix; however, it is the responsibility of the activity's immediate supervisor/reporting senior, Weapons Officer, Ordnance Officer, and/or Qualification/ Certification Board Chairperson to examine the individuals' prior explosives safety training history to assess the need for these courses or refresher. Requirement guidelines should be addressed in activity training plans.

(1) AMMO-18-DL Basics of Naval Explosives Hazard Control (4E-F29/645-F13(DL)):

Scope: AMMO-18-DL is designated for entry level energetic material/ordnance handling personnel with limited or no background in explosives safety. This course will provide a basic understanding of the hazards of ammunition and explosives, and acquaint attendees with the explosives safety principles and practices outlined in this publication. Characteristics of ammunition and explosives, storage compatibility, and quantity-distance requirements will be introduced. Control of hazards, transportation, Standard Operating Procedures (SOP), and various handling operations will be addressed. An explanation of the DON Safety and Qualification/Certification program will be given. An electronic certificate of completion will be issued upon course completion.

Prerequisites: None.

Format/Availability: This course is web-based and available on-line only at the NeL site, https://learning.nel.navy.mil.

Length: This course takes an average of 16 hours to complete.

Periodicity: Completion of AMMO-18-DL is one-time only. Activities may require this course as a refresher for personnel who have been away from ordnance handling duties for a year or more.

(2) AMMO-49-DL Naval Explosives Safety for Supervisors/Managers (4E-F39/645-F23 (DL)):

Scope: AMMO-49-DL is an advanced version of AMMO-18-DL and is designed for Explosives Safety Officers (ESO)/Specialists, Ordnance Managers, and Work Center Supervisors. This course provides a detailed overview of general ammunition and explosives safety training for DON shore activity as provided by this manual. The training introduces the different classes of ammunition and explosives, stressing safe handling and explosives safety requirements and emphasizes the use of explosives safety-related publications and instructions for extracting information required to manage ordnance operations safely. Course content provides scenarios where the student must be able to find and use referenced information to solve problems. An electronic certificate of completion will be issued upon course completion.

Prerequisites: None.

Format/Availability: This course is web-based and available on-line only at the NeL site, https://learning.nel.navy.mil.

Availability: This course takes an average of 24 hours to complete.

Periodicity: Completion of AMMO-49-DL is one-time only. Activities may require this course as a refresher for personnel who have been away from ordnance supervisor/management duties for a year or more.

Special Information: The option to take AMMO-49-DL in lieu of AMMO-18-DL is authorized and satisfies the requirements of this appendix.

b. AMMO-29 Electrical Explosives Safety for Naval Facilities (4E-F34/645-F18 (MC)):

Scope: AMMO-29 is designed for personnel who are directly involved with grounding, bonding, and/or lightning protection program for the activity. Attendees should be engineers, technicians, or safety inspectors in Public Works, Facility Planning, Safety, or Test Departments involved in the design, installation, testing, or inspection of electrical services and lightning and grounding systems in hazardous locations. This course provides students with the basic regulations and procedures to correctly inspect, test, document and manage electrical safety aspects as they apply to facilities housing ammunition and explosives. Course content includes the identification of lightning protection system components, design criteria, and requirements for grounding, bonding, control of static electricity and electrical equipment in hazardous (classified) locations. An overview of the Hazards of Electromagnetic Radiation to Ordnance (HERO), Fuel (HERF), and Personnel (HERP) is presented. A portion of the class time is allocated to a field exercise involving visual inspections and electrical test procedures of lightning protection and grounding systems.

Prerequisites: Completion of AMMO-49-DL is recommended.

Format/Availability: AMMO-29 is available in both a classroom version offered by DAC, at on-site locations, or in a self-paced WBT format. Classroom training is mandatory for all entry-level users to ensure that the student receives optimum classroom interface and hands-on experience. Schedule information and classroom billet requests can be obtained from the DAC website at http://www.dactces.org. The WBT format, AMMO-29-DL, is to be used as a refresher course for electrical program personnel who have already received initial AMMO-29 classroom training. The WBT course shall not be used as the primary qualifier. An electronic certificate of completion will be issued upon course completion. AMMO-29-DL may be ordered from the NeL site at https://learning.nel.navy.mil.

Length: AMMO-29 is a five-day classroom course. AMMO-29-DL takes an average of 24 hours to complete.

Periodicity: Entry-level classroom attendance is one-time only. NeL WBT or classroom is recommended as refresher training every four years after initial training.

Special Information: Activities that experience difficulty obtaining course quotas for entry-level attendees must contact NOSSA for permission to use the WBT as the primary qualifier. Personnel who are not directly involved in the lightning and grounding protection program, but have a need to understand the process and procedures are authorized to use AMMO-29-DL for training.

c. AMMO-33 Explosives Safety and Environmental Risk Management (9E-F65/920-F33 (MC)):

Scope: AMMO-33 designed for Navy and Marine Corps Commanding Officers/Officers-in-Charge (CO/OIC), Executive Officers, Marine Corps Supply Battalion Commanders, COS/G-4/G-4A, FSSG and MCB, Logistics Directors for MCAS, Station COs/OICs, and/or senior civilians. This course provides an overview of the explosives safety responsibilities required of these positions. This course is mandatory for activities/commands/directorates that process conventional chemical military munitions. Those activities/commands/directorates that do not process conventional or chemical military munitions are exempt from this requirement but are encouraged to attend.

Prerequisites: Completion of AMMO-49-DL is recommended.

Format/Availability: AMMO-33 is a classroom course offered at on-site locations. Schedule information and classroom billet requests can be obtained from the NeL site at https://learning.nel.navy.mil.

Length: AMMO-33 is a two-day course.

Periodicity: Completion of AMMO-33 is one-time only.

Special Information: Personnel who have completed the Shore Station Command Seminar Program or the Shore Station Senior Leadership (SSSL) course after March 4, 1999 and have received an AMMO-33 certificate have met the requirement for this course.

d. AMMO-36 Explosives Safety for Naval Facility Planning (4E-F36/645-F20 (MC)):

Scope: AMMO 36 is designed for personnel who are directly involved in the activity's explosives safety site planning process. This course emphasizes the preparation and review of DON site plans submitted for various explosives facilities. Course includes an in-depth review of Department of War (DoW) quantity-distance standards and application of these standards in the form of a Facility Design Problems Workshop. Each CO/OIC shall ensure that at least one individual within his command has successfully completed this course and is assigned the responsibility for appropriate review and commentary on all site approvals prepared by or for the activity prior to release to NOSSA or MARCORSYSCOM. In addition, CO/OIC shall ensure that individuals with construction/project management responsibility successfully complete this course to enable a better understanding of siting criteria during construction of explosives-related facilities or facilities encumbered by explosives arcs. Attendees should be DON facility planners whose responsibilities include explosives facilities at shore installations, Design/Project/Construction Managers responsible for direct oversight of construction or renovation projects that involve or support explosives operations, safety department personnel whose responsibilities include the review of facility site plans, or individuals (such as Explosives Safety Officers) who fall within the review chain of a typical DON facility site plan to include Naval Facility Engineering Field Divisions and Field activities.

Prerequisites: Completion of AMMO-29 and AMMO-49-DL are recommended.

Format/Availability: AMMO-36 is available in both a classroom version offered by DAC, at on-site locations, or in a self-paced WBT format. Schedule information and classroom billet requests can be obtained from the NeL site at https://learning.nel.navy.mil. The WBT course is designed for personnel who are directly involved in the activity's explosives safety site planning process and have attended the initial classroom training. The WBT course shall not be used as the primary qualifier. However, personnel who are not directly involved in the site approval program but have a need to understand the process and procedures are authorized to use the AMMO-36-DL for training. AMMO-36-DL may be ordered from the NeL site at https://learning.nel.navy.mil.

Length: AMMO-36 is a five-day classroom course. AMMO-36-DL takes an average of 32 hours to complete.

Periodicity: Site approval personnel shall refresh with AMMO-36-DL at least every five years to maintain familiarity with changing requirements.

e. AMMO-43 Intermodal Dry Cargo Container/Convention for Safe Container (CSC) Reinspection (8A-F60/551-F52 (MC)):

Scope: AMMO-43 is designed for personnel who inspect or reinspect intermodal dry cargo containers. The course provides students with information required to reinspect intermodal dry cargo containers in accordance with the CSC standards. Course content includes survey of CSC test requirements: detailed analysis of reinspection criteria required by CSC, U.S. Public Law, and Joint Service Regulations; and orientation of container structural and nonstructural components. Reporting requirements and reinspection decal placement are also discussed. Personnel successfully completing this course may be certified as DoW CSC Inspectors as required by DOD 4500.9-R, Volume VI.

Prerequisites: Completion of AMMO-49-DL is recommended.

Format/Availability: AMMO-43 classroom version is presented by DAC or at on-site locations. Schedule information and classroom billet requests can be obtained from the DAC website at https://learning.nel.navy.mil. This course is also offered in a self-paced WBT format. AMMO-43-DL may now be used as the primary qualifier for all services, and may be ordered from the NeL site at https://learning.nel.navy.mil.

Length: AMMO-43 is a three day classroom course. AMMO-43-DL takes approximately 16 hours to complete.

Periodicity: AMMO-43 classroom training is one-time only. Personnel shall successfully complete AMMO-43-DL every four years to retain certification/qualification status.

f. AMMO-51-MV and AMMO-51-MV/RC Naval Motor Vehicle and Railcar Inspection (4E-F41/645-F25 (MC) and (4E-F40/645-F24 (MC)):

Scope: AMMO-51 is required by 49 CFR 172, 174, 177, and 396 and implemented by NAVSEA SW020-AF-HBK-010. This course provides newly assigned inspection personnel with the up-to-date requirements, techniques, and procedures assigned for inspection of motor vehicles and railcars on and off station for ammunition, explosives, and other related hazardous materials. This course provides students with instruction in compatibility, placarding requirements, blocking and bracing for International Organization for Standardization (ISO) intermodal containers, railcar, non-tactical and tactical vehicles. Additionally, DoW and DON transport equipment inspection procedures using DD Form 626, Motor Vehicle Inspection (Transporting Hazardous Material), and NAVSEA Form 8023/3, Railcar Inspection Checklist, are taught. DON transportation safety requirements and security of sensitive conventional arms, ammunition, and explosives are also covered.

Prerequisites: Completion of AMMO-18-DL and AMMO-49-DL are recommended.

Format/Availability: AMMO-51 classroom training is available in two versions: Naval Motor Vehicle Inspection (MV) and Naval Motor and Railcar Inspection (MV/RC). Schedule information and classroom billet requests can be obtained from the NeL site at https://learning.nel.navy.mil. The WBT shall not be used as the primary qualifier, except by Marine Corps explosives drivers. The WBT will equip these drivers with the necessary training to complete and sign the DD Form 626. Order DL courses from https://learning.nel.navy.mil.

Length: AMMO-51 is a three and one-half day classroom course. AMMO-51-DL takes 8 to 24 hours to complete, depending upon the version selected.

Periodicity: Completion of AMMO-51 classroom version is one-time only. Refresher training can be accomplished using AMMO-51 WBT. Refresher training via WBT must be successfully completed every two years to maintain certification.

Special Information: Personnel who are not directly involved in the motor vehicle and railcar inspection program, but have a need to understand the process and procedures are authorized to use the WBT for training. Activities that experience difficulty obtaining course quotas for entry-level users must contact NOSSA for permission to use the WBT as the primary qualifier.

g. AMMO-74 Explosives Safety Officer Orientation (4E-F48/645-F32 (MC)):

Scope: AMMO-74 provides DON personnel assigned Explosives Safety Officers (ESO) duties training in the technical and managerial aspects of DON Explosives Safety Programs. This course places emphasis on the ESO responsibilities listed in this manual, Marine Corps Order (MCO) 5100.29 Volume 8 (series), and NOSSAINST 8020.14 (series). This course provides foundational training in program administration of explosives handlers' qualification/certification, ordnance operations, SOPs, storage, HERO, mishap reporting and investigation, preparation for Explosives Safety Inspections (ESI), site approval processes, inert ordnance certification and environmental law, transportation, material handling equipment, facility management, publications, and general safety concepts. Attendees should be or about to be assigned to their facility as the ESO or Assistant ESO.

Prerequisites: Attendees should have a good working knowledge of this manual, MCO 5100.29 Volume 8 (series), and NOSSAINST 8020.14 (series). AMMO-74 in conjunction with other related training, AMMO-29, AMMO-36, AMMO-49, AMMO-51, and Munitions Rule (MR) Implementation Procedures training, fulfills the training requirements to fully qualify an individual as an ESO.

Format/Availability: AMMO-74 is presented in classroom version only, offered by DAC or at on-site locations. Schedule information and classroom billet requests can be obtained from the NeL site at https://learning.nel.navy.mil.

Length: AMMO-74 is a seven and one-half day course.

Periodicity: Completion of AMMO-74 is one-time only. It is recommended that graduates of AMMO-74 return to the classroom every four years to stay abreast of current development.

Special Information: This course is mandatory for all ESOs. ESOs have two years from the date of their appointment letter or date of this appendix to complete AMMO-74 and the related training. ESOs have the option to complete related training via NeL, classroom training, or local instructor. The primary role for experienced ESOs is to bring to the classroom those experiences in program management and oversight gained over time to enhance the overall knowledge level of the entry-level students.

h. Materials Handling Equipment (MHE) Operator Course:

Scope: This training is required by 29 CFR 1910.178, implemented by NAVSEA SW023-AH-WHM-010 and NAVSUP P-538 and designed for MHE operators who handle

ammunition and explosives. This course establishes the minimum requirements that DON personnel must successfully meet prior to being issued a powered industrial MHE license to handle ammunition and explosives. This course identifies the various types of MHE approved for handling ammunition and explosives afloat and ashore, defines the operational areas in which the MHE can be operated, addresses operational safety precautions, and concludes with a test to assess students' knowledge of safety requirements and operational proficiency.

Prerequisites: Completion of AMMO-18-DL is recommended.

Format/Availability: NAVSEA SW023-AH-WHM-010 contains specific information on training requirements. The training course curriculum is located in appendix A of NAVSEA SW023-AH-WHM-010 in order to assist activities in conducting a training program for MHE operators. Upon introduction of new equipment or when initial operator training is required, local instructors are authorized to provide this training using the training course curriculum found in NAVSEA SW023-AH-WHM-010. Local instructors shall be authorized in writing by the CO/OIC.

Length: The MHE Operator Course takes an average of 40 hours to complete.

Periodicity: Initial MHE operator training in accordance with appendix A of NAVSEA SW023-AH-WHM-010 is one-time only. See paragraph 3-3.4 of NAVSEA SW023-AH-WHM-010 for specific refresher training parameters.

i. Ammunition and Explosives Driver 12-Hour Training Course:

Scope: This training course is required by 49 CFR 172.704 and implemented by NAVSEA SW020-AF-HBK-010 for drivers of vehicles which transport ammunition and explosives materials on-station and over public roads. Covered in this curriculum: driving trucks, truck-tractors with semi-trailers, and other vehicles of appropriate types; handling, loading, and transporting ammunition, explosives, and related hazardous materials, relevant regulations and procedures pertaining to the transport of arms, ammunition, and explosives; the proper use of fire extinguishers, and the requirements for completing and filing the necessary forms and reports.

Prerequisites: All applicants for positions as explosives drivers shall be 18 years of age or older to operate vehicles transporting ammunition and explosives on-station, and shall be 21 years of age or older for off-station operations. DON policy and procedures for testing and licensing Navy military, civilian and contractor motor vehicle operators is defined in NAVFAC P-300. As a condition for enrolling in this course, candidate drivers shall possess the required NAVFAC P-300 certificates, to include a valid U.S. Government Motor Vehicle Operator's Identification Card (OF-346). Consult NAVSEA SW020-AF-HBK-010 Table 2-1 for special instructions applicable to military and civilian drivers, and the DoD 4500.9-R-Part II, chapter 204 for military drivers. The state license for candidate civilian drivers will include the Commercial Driver's License (CDL) endorsement for hazardous materials. See 49 CFR 383.23. It is recommended that explosives drivers also take Naval Motor Vehicle and Railcar inspection, AMMO 51.

Format/Availability: Locally trained instructors are authorized to provide this course.

Length: Initial training takes an average of 12 hours to complete. The refresher course is 4 hours in length.

Periodicity: Initial training is one-time only, and a refresher is required every two years.

j. Munitions Rule Training:

Scope: The Military Munitions Rule (MMR) of the Resource Conservation and Recovery Act (RCRA) identifies when conventional and chemical military munitions become hazardous waste and subject to Subtitle C of RCRA, and provides for the safe storage and transportation of such waste. The MMR integrates the principles of environmental protection, munitions management, and explosives safety into a regulatory scheme for Waste Military Munitions (WMM) management. To interpret the MMR, the DoW published the DODM 4715.26, DoD Military Munitions Rule (MR) Implementation Procedures. Paragraph 3.1.b(2)(f) requires all personnel handling or managing WMM to be appropriately trained on the MR and other applicable federal, state, interstate, and local WMM management requirements. In addition, 40 CFR 264.16(c) and 265.16(c) require personnel to take part in an annual review or training. The legal responsibilities for compliance with the MR and for proper environmental management of WMM at the federal level are covered.

Prerequisites: None.

Format/Availability: Munitions Rule training is administered in one of two formats:

(1) Classroom training provided directly to activities by NOSSA personnel upon request and as resources permit.

(2) WBT available to personnel from Navy e-Learning (NeL) at https://learning.nel.navy.mil. In addition, NOSSA personnel are available to provide Munitions Rule technical support upon request.

Length: Munitions Rule training takes an average of 4 hours to complete.

Periodicity: Munitions Rule training shall be accomplished on an annual basis.

Special Information: Navy activity personnel who have satisfactorily completed Munitions Rule training instructed by NOSSA are authorized to teach this course to other Navy personnel. Training administered in this manner must be conducted using a live instructor in a classroom setting using NOSSA-supplied training materials. Since course materials are based on federal regulations and DON requirements, Navy activity trainers should include any applicable state requirements. The Navy trainer shall ensure official records of the training are supplied to the class attendees for inclusion in their training jackets. The Navy trainer must still meet the annual requirement for training but after the initial training from NOSSA, all subsequent training may be accomplished using the WBT resource. Marine Corps personnel who satisfactorily complete the NOSSA-instructed course are not authorized to teach the course. OCONUS personnel should check the applicable Status of Forces Agreement (SOFA) with the host country to determine if Munitions Rule training is required.

k. Category 3 Crane Safety:

Scope: This course is designed for category 3 (non cab operated) crane operator candidates and supervisors who assign/oversee these operations and will provide a knowledge base upon which to build with on the job experience. Category 3 Crane Safety will acquaint incidental crane operators with Navy requirements for the safe operation of category 3 non-cab operated cranes. Topics include NAVFAC P-307 familiarization, crane and lift types, communications,

lifting requirements, basic rigging gear inspection and use, determining load weights, calculating capacities, and crane accident identification and response. Satisfactory completion of this course, NAVFAC P-307 appendix N requirements, and supervisory approval are required prior to operating cranes and hoists.

Prerequisites: None.

Format/Availability: The Category 3 Crane Safety course is available on NeL at https://learning.nel.navy.mil. A CAC is required. Select "Navy e-Learning", select the "Course Catalog" tab, select the "(USN) Department of the Navy (DON) Training" link. Scroll to and select the "(NAVYCRANE) Navy Crane Training" link. Scroll to Table of NCC courses. Select link "Category 3 (Non-Cab) Crane Safety" for a description of the course. Select "Enroll" tab to enroll. Inquiries regarding Crane Safety training may be emailed to nfsh_ncc_training@navy.mil.

Length: Category 3 Crane Safety may take between 8 and 16 hours to complete.

Periodicity: Category 3 (non-cab operated) crane operators shall re-take the Category 3 Crane Safety Course every three years.

Special Information: Activity instructors who have been authorized by the Navy Crane Center may teach this course. Requests to obtain authorized instructor status for this course shall be forwarded to the Navy Crane Center by emailing nfsh_ncc_training@navy.mil.

I. Rigging Practices:

Scope: This course is designed for crane riggers and crane rigger supervisors. The Rigging Practices Training Course will acquaint personnel with Navy requirements for safe lifting and handling operations and provide a knowledge base upon which to build with on the job experience. Topics covered include NAVFAC P-307 familiarization, rigging terminology, rigging gear application, basic knots, the crane team concept, crane communication methods, specific lift requirements, executing lifts, determining load weights, basic load charts, and crane accident identification and response.

Prerequisites: Completion of AMMO-18-DL is recommended.

Format/Availability: The Rigging Practices Training Course is available on NeL at https://learning.nel.navy.mil. A CAC is required. Select "Navy e-Learning", select the "Course Catalog" tab, select the "(USN) Department of the Navy (DON) Training" link. Scroll to and select the “(NAVYCRANE) Navy Crane Training” link. Scroll to Table of NCC Courses. Select link "Rigging Practices" for a description of the course. Select "Enroll" tab to enroll. Inquiries regarding Crane Safety training may be emailed to nfsh_ncc_training@navy.mil.

Length: The Rigging Practices Training Course may take between 20 and 30 hours to complete.

Periodicity: Completion of Crane Rigger is one-time only.

Special Information: Activity instructors who have been authorized by the Navy Crane Center may teach this course. Requests to obtain authorized instructor status for this course shall be forwarded to the Navy Crane Center by emailing nfsh_cc_training@navy.mil.

m. Ammunition Supply Administration. The following courses have been designated to satisfy the basic Ammunition Accounting training requirements for entry-level ammunition accounting personnel ashore. Successful completion of one of these courses is mandatory for newly assigned Retail Ordnance Logistics Management System (ROLMS)/Ordnance Information System – Retail (OIS-R) operators that process and maintain records relating to ordnance assets. Each of these courses has been developed around the general job functions. The NALC MFST/LAO course allows for a degree of customizing in order to meet specific activity requirements.

(1) Ammunition Supply Administration (ASA) (A-041-0040):

Scope: This course provides personnel with the knowledge, skills, and abilities to generate and maintain ammunition records and other technical information required to manage Navy, Marine, Coast Guard, NATO, and other service ordnance in support of the Ordnance Information System. The student will learn the skills and proper procedures necessary to record and manage ammunition assets. Training includes the generation and management of records relating to requisitions, receipts, issues, expenditures, inventory management and control, Notice of Ammunition Reclassifications (NAR), ammunition reporting and other pertinent technical safety information.

Prerequisites: Students should have a minimum of six months on-the-job training in this subject, as well as a working knowledge of Microsoft operation systems. Upon successful completion of the course by active duty enlisted personnel, the individual is awarded the NEC 9525 (Ammunition Inventory Management Specialist).

Format/Availability: The course schedule and description may be found on the Catalog of Navy Training Courses (CANTRAC) website at https://app.prod.cetars.training.navy.mil/cantrac/vol2.html.

Length: A-041-0040 takes an average of 12 days to complete.

Periodicity: Completion of A-041-0040 is one-time only.

(2) NALC Ordnance Information System – Retail (OIS-R) MFST/LAO training:

Scope: This course provides personnel with the knowledge, skills, and abilities to generate and maintain ammunition records and other technical information required to manage Navy, Marine, Coast Guard, NATO, and other service ordnance in support of the Ordnance Information System. The student will learn the skills and proper procedures necessary to record and manage ammunition assets. Training includes the generation and management of records relating to requisitions, receipts, issues, expenditures, inventory management and control, Notice of Ammunition Reclassifications (NAR), ammunition reporting and other pertinent technical safety information.

Prerequisites: Students should have a minimum of six months on-the-job training in this subject, as well as a working knowledge of Microsoft operation systems. Successful completion of this course does not award the individual the NEC 9525 (Ammunition Inventory Management Specialist).

Format/Availability: This course can be scheduled through the NALC regional Mobile Fleet Support Team (MFST)/Logistics Assistance Officer (LAO).

Length: Dependent upon customization of training.

Periodicity: Completion of NALC OIS-R training is one-time only requirement. Refresher training can be scheduled through the NALC MFST/LAO

n. Navy and Marine Corps Conventional Ammunition Sentencing Course:

Scope: The NAVSUP Ammunition Sentencing Publication (NAVSUP P-805 and appendices A, B, C, D, and E) provide a procedural framework for identifying and classifying the serviceability of all in-service ammunition in inventory. The Ammunition Sentencing Training Course provides informal, technical material for either classroom or self-study for personnel who perform, supervise, or manage the task of ammunition sentencing. The course material is currently structured in three parts.

(1) Part I covers an in-depth explanation of Ammunition Condition Codes (C/C) for Navy and Marine Corps conventional ammunition (expendable ordnance). In addition, Part I will explain Ammunition Defect Codes (D/C), their application to Navy and Marine Corps conventional ammunition, and their role in supplementing and/or complementing C/Cs. Part I emphasizes the correct application of C/Cs and D/Cs so that all Navy and Marine Corps conventional ammunition will always be assigned the correct codes.

(2) Part II covers an in-depth explanation of the NAVSUP Ammunition Sentencing Publication (NAVSUP P-805 chapter 1, “Introduction”, chapter 2, “References”, chapter 3, “General Requirements”, chapter 4, “Receipt/Issue Inspection”, chapter 5, “Storage Inspection”, chapter 7, “Segregation Inspection”, and appendices A, B, C, D, and E), their proper use and application. Part II is intended for those units who are not deployed in an operational environment or considered to be a deployable unit. The emphasis of Part II is two-fold: the first is on general familiarization, while the second is specific in nature on how to use the publications during the ammunition sentencing process.

(3) Part III covers an in-depth explanation of Ammunition Sentencing Publication (NAVSUP P-805, chapter 1, “Introduction”, chapter 2, “References”, chapter 3, “General Requirements”, chapter 6, “Fleet Inspection” and appendices A, B, C, D, and E), their proper use and application to the sentencing of Navy and Marine Corps conventional ammunition that is operationally deployed. Part III is intended for those units who are deployed in an operational environment or considered to be a deployable unit. The emphasis of Part III is twofold: the first is on general familiarization, while the second is specific details on the proper use of NAVSUP P-805 during the ammunition sentencing process for Fleet operating units. Training in the use of NAVSUP P-805 should consist of Part I followed by Part II for those units who primarily function in a garrison environment or are not considered a deployable unit, or Part I followed by Part III for those units who primarily function in a forward deployed environment or are considered a deployable unit. During presentation of all three parts of the course material, a number of exercises are conducted by the student to assist in broadening the knowledge base skill sets through the use of these practical application exercises.

Prerequisites: None.

Format/Availability: This training course is provided by the Naval Supply Systems Command Ammunition Logistic Center (NAVSUP NALC) and Commander, Naval Air Forces (COMNAVAIRFOR), USMC Munitions School, Fort Lee, VA. The course is available in two formats. The first is a comprehensive training period covering Parts I and II or Parts I and III as outlined in the course description, above. This training is for those personnel who perform, supervise, or manage the task of ammunition sentencing with minimal background knowledge of

the subject matter and to those who wish to expand on their professional knowledge in relationship to ammunition sentencing.

The second format is intended to build on previously acquired skills of ammunition sentencing. This may include personnel who have received the comprehensive training course and those who have extensive background knowledge of ammunition sentencing and desire to refresh or increase their knowledge base skill sets of the ammunition sentencing process. The period of instruction includes, but is not limited to, a review of the ammunition sentencing process as a whole and the latest changes or updates to the manual. In addition, this second format can be tailored to meet a specific mission or functional area that the command may wish to focus on.

Length: The comprehensive Conventional Ammunition Sentencing Class is three days. The refresher course format is two days.

Periodicity: Completion of the Conventional Ammunition Sentencing Class is one-time only. Refresher training is as required by the activity.

Special Information: This training is mandatory for entry-level personnel who are directly involved in sentencing of Navy and Marine Corps conventional ammunition, with no formal training in this subject. It is recommended that experienced personnel and others who need to understand the process and procedure, review the course curriculum for training/refresher consideration.

o. Material Potentially Presenting an Explosive Hazard (MPPEH):

Scope: The potential for MPPEH to present an explosive hazard is the single characteristic that distinguishes it from other DoW material to be reused, excessed, recycled or otherwise disposed. Although other requirements, such as trade security and demilitarization, may apply to MPPEH and also affect its management, the potential explosive hazards associated with MPPEH make it unique and must be addressed prior to its transfer within or release from the DON. The primary MPPEH requirements are contained in Defense Explosives Safety Regulation (DESR) 6055.09, DODI 4140.62 (series), and DOD 4160.28M which have been integrated into NAVSEA OP 5 and serve as the basis for this training.

Prerequisites: None.

Format/Availability: The MPPEH training course is available to personnel from Navy e-Learning (NeL) at https://learning.nel.navy.mil. In addition, NOSSA personnel are available to provide MPPEH technical support upon request.

Length: MPPEH training takes an average of 4 hours to complete.

Periodicity: MPPEH training must be completed annually.

p. Explosives Safety Standdowns: It is recommended that DON activities which are involved with ammunition and explosives operations conduct an annual explosives safety standdown as part of their overall proactive explosives safety program. The activity should consider incorporating applicable items from the following non-inclusive list into their standdown: enforce the principle that explosives safety is everyone's responsibility; the principles of operational risk management; review operations for compliance with governing directives, e.g., SOPs; qualification/certification; general cleanup of storage and operating areas; environmental issues such as hazardous waste disposal and reclamation;

industrial safety training requirements in OPNAVINST 5100.23 (series) for personal protective equipment (eye, foot, hand, head, and ear); toxic and hazardous substances hazard communication (29 CFR 1910.1200); and lifting (back protection). Use this training and any pertinent information garnered from it to support the Explosives Safety Self-Assessment (ESSA) requirements in NOSSAINST 8020.14 (series).

q. Munitions Response Site Management (A 4A 00934):

Scope: This course is recommended for all ESOs and Safety Specialists involved in planning, scoping, reviewing, or providing oversight of cleanup or construction at a munitions response site. The student will learn the skills and proper procedures necessary to manage risks associated with intrusive work when munitions and explosives of concern or MPPEH are known or suspected at the site.

Prerequisites: None

Format/Availability: Course information can be found at https://www.netc.navy.mil/.

Length: Munitions Response Site Management takes three days to complete.

Periodicity: Completion of A 4A 0093 is one time only.

Special Information: It is recommended that experienced ESOs and Safety Specialists take this course.

C-4. EQUIVALENT COURSES.

The intent of an equivalent course is to grant the activity, TYCOM, or major claimant, the most effective and efficient means of meeting the course training objectives of this appendix. Other courses that satisfy the training objectives of paragraphs D-3a through D-3p may be used at the discretion of the CO/OIC, with approval by NOSSA. The activity coordinator must document each course equivalency in writing and endorsement by the CO/OIC, must maintain course curriculum, updates and student documentation on file, and must provide student roster data to NOSSA. Course curriculum and instructor qualifications must be reviewed and authorized by NOSSA, and must be maintained in coordination by NOSSA to ensure updates are incorporated. For comparison purposes, copies of DAC's course outlines may be obtained from NOSSA Courses that are not authorized by NOSSA in writing will not be recognized as compliant with the requirements of this program.

C-5. DAC COURSE QUOTAS.

All courses offered by DAC (WBT and Classroom) can be obtained through the NeL site at https://learning.nel.navy.mil.

a. For Navy activities including contractors, technical assistance for quotas may be obtained from:

Commanding Officer
Naval Ordnance Safety and Security Activity (NOSSA)
Attn: Explosives Safety Training Manager
Farragut Hall, Bldg D-323
23 Strauss Avenue
Indian Head, MD 20640-5555
Phone: Commercial (240) 435-0444

b. For Marine Corps activities including contractors, technical assistance for quotas may be obtained from:

Commanding General
Marine Corps System Command
Program Manager for Ammunition
2200 Lester Street
Quantico, VA 22134-5010
Phone: DSN 378-3157/3109, Commercial (703) 432-3157/3109

C-6. TUITION.

C-6.1. MILITARY PERSONNEL AND CIVILIAN EMPLOYEES OF DOW AGENCIES. A reciprocal policy of non-reimbursement for students from any elements of DoW is followed. There is no charge for military personnel and civilian employees of DoW agencies.

C-6.2. CIVILIAN EMPLOYEES OF NON-DOW AGENCIES AND CONTRACTORS. Civilian employees of non-DoW agencies and contractor students may attend training on an as-needed, space-available basis. An authorization form is required for contractors to attend training and must be signed by a Government representative and faxed to (918) 420-6022. The form is available at https://learning.nel.navy.mil.

C-7. REQUESTS TO ATTEND TRAINING OUTSIDE OF THE NORMAL FY DAC TRAINING SCHEDULE.

Activities requesting training outside of the normal FY DAC training schedule are required to submit requests in writing at least 180 days before the desired training date to the address in paragraph C-5a or b. The following information must accompany each request: course title, course number, requesting activity, mailing address, and point of contact with telephone and fax numbers. Upon notification that a mobile training team has been scheduled to meet such requests, a fund site or accounting line to cover the costs associated with presenting the course (travel, per diem, rental car, shipping, and ground transportation) must be received at DAC no later than 60 days prior to CONUS class start date and 120 days for OCONUS classes.

C-8. REQUESTS TO ATTEND OUT-YEAR ON-SITE CLASSES.

Requirements/requests for out-year on-site classes must be submitted in writing to the office listed in paragraph C-5a or b, for inclusion in the Army Training Requirements and Resource System. The requirement to submit out-year requests for classes and quotas has always been in effect. Advance planning by all activities is crucial in order to maintain adequate training resources in the future.

C-9. POINTS OF CONTACT.

C-9.1. QUOTAS FOR THE AVIATION ORDNANCE OFFICER CAREER PROGRESSION (AOOCP) LEVEL I, II, AND III COURSES.

Director
NAS Whiting Field
Bldg 2945
Milton, FL 32570-6002
Phone Numbers: DSN 868-7897, 868-7896, Extensions: Director -31, Quota Control Officer -34,

Senior Enlisted Advisor -36, Technical Training Advisor -32, Admin -33
Fax: DSN 868-7898, Commercial (850) 623-7896/7897

C-9.2. QUOTAS FOR THE MARINE CORPS AMMUNITION MANAGER COURSE.

Commanding Officer
Marine Corps Detachment (Marine Element)
U. S. Army Ordnance Missile and Electronic Maintenance School
Redstone Arsenal, AL 35897-6914
Phone: DSN 746-8441, Commercial (256) 876-8441
Fax: DSN 788-2537, Commercial (256) 842-2537

C-9.3. POINT OF CONTACT FOR THIS APPENDIX.

Commanding Officer
Naval Ordnance Safety and Security Activity (NOSSA)
Explosives Safety Training Manager
Farragut Hall, Bldg D-323
23 Strauss Avenue
Indian Head, MD 20640-5555
Phone: Commercial (240) 435-0444
Fax: DSN 354-6093, Commercial (301) 744-6093

Table C-1. Explosives Safety Training

This Table serves as a quick reference guide for Explosives Safety Training Requirements. Course name, scope, prerequisites, availability, special information, and periodicity are listed in paragraph C-3

Positions (Based on actual duties performed, not job title)	**Navy Explosives Safety Courses**																	
M = Mandatory R = Recommended	Basic Explosives Safety (AMMO-18/49)	Electrical Explosives Safety for Naval Facilities (AMMO 29)	Explosives Safety and Environmental Risk Management (AMMO-33)	Explosives Safety for Naval Facility Planning (AMMO-36)	Intermodal Dry Container CSC Reinspection (AMMO-43)	Naval Motor Vehicle and Railcar Inspection (AMMO-51)	ESO Orientation Course (AMMO-74)	Material Handling Equipment (MHE) Operator Course	Ammunition and Explosives Driver 12- Hour Training Course	Munitions Rule Training	Apprentice Trainer Course	Crane Safety (Non-Cab Operated Cat 3)	Rigging Practices	Ammunition Supply Ad-ministration	USN/USMC Conventional Ammunition Sentencing Course	Explosives Safety Stand Down	Material Potentially Presenting an Explosive Hazard (MPPEH)	Munitions Response Site Management A 4A 0093
Commanding Officer, Officer-in-Charge, Executive Officer, Senior Civilian Director			M													R		
Explosives Safety Officer (ESO) (oversees operations at facilities, enforces all safety regulations)	M 49	M	R	M		M	M			M				R	R	R	M	R
Ordnance/Weapons Officer	M 49	R	R	R			R			R				R	R	R		
Explosives Safety Specialist (monitors programs and operations on site)	M 49	R		M[1]		R	M[1]			R				R	R	R		R
NOSSA Explosives Safety Inspectors	M 49	M	R	M	R	M	M			M				M	R	R	M	
Personnel who conduct or inspect grounding, bonding, and/or lightning protection (see Note 6)	R 18	M														R		
Personnel who prepare, review, and approve site approvals requests	R 49	R		M[6]												R		

Table C-1. Explosives Safety Training (Continued)

Positions (Based on actual duties performed, not job title)	Navy Explosives Safety Courses																	
M = Mandatory R = Recommended	Basic Explosives Safety (AMMO-18/49)	Electrical Explosives Safety for Naval Facilities (AMMO 29)	Explosives Safety and Environmental Risk Management (AMMO-33)	Explosives Safety for Naval Facility Planning (AMMO-36)	Intermodal Dry Container CSC Reinspection (AMMO-43)	Naval Motor Vehicle and Railcar Inspection (AMMO-51)	ESO Orientation Course (AMMO-74)	Material Handling Equipment (MHE) Operator Course	Ammunition and Explosives Driver 12- Hour Training Course	Munitions Rule Training	Apprentice Trainer Course	Crane Safety (Non-Cab Operated Cat 3)	Rigging Practices	Ammunition Supply Ad-ministration	USN/USMC Conventional Ammunition Sentencing Course	Explosives Safety Stand Down	Material Potentially Presenting an Explosive Hazard (MPPEH)	Munitions Response Site Management A 4A 0093
Personnel who are involved in the handling of Waste Military Munitions	M 49									M[8]						R		
Personnel who are designated to assess and document MPPEH as MDAS or MDEH										M[7]						R	M[7]	
Personnel required by OPNAVINST 8023.24 (series) to be qualified and certified to handle ordnance and explosives, i.e., ordnance workers.	M[7] 18															R		
Inspectors of explosives laden vehicles and railcars required to sign forms (DD 626 and/or NAVSEA 8023/3)	R 18					M[2]										R		
Personnel who are required to inspect or reinspect intermodal dry cargo containers					M											R		
Local Instructor	R 18							M	M	M	M	M				R		
Explosives Material Handling Equipment (MHE) Operator	M[1] 18							M								R		
Qualified Recycling Program (QRP) Personnel																R	M[7]	

Table C-1. Explosives Safety Training (Continued)

Positions (Based on actual duties performed, not job title)	Navy Explosives Safety Courses																	
M = Mandatory R = Recommended	Basic Explosives Safety (AMMO-18/49)	Electrical Explosives Safety for Naval Facilities (AMMO 29)	Explosives Safety and Environmental Risk Management (AMMO-33)	Explosives Safety for Naval Facility Planning (AMMO-36)	Intermodal Dry Container CSC Reinspection (AMMO-43)	Naval Motor Vehicle and Railcar Inspection (AMMO-51)	ESO Orientation Course (AMMO-74)	Material Handling Equipment (MHE) Operator Course	Ammunition and Explosives Driver 12- Hour Training Course	Munitions Rule Training	Apprentice Trainer Course	Crane Safety (Non-Cab Operated Cat 3)	Rigging Practices	Ammunition Supply Ad-ministration	USN/USMC Conventional Ammunition Sentencing Course	Explosives Safety Stand Down	Material Potentially Presenting an Explosive Hazard (MPPEH)	Munitions Response Site Management A 4A 0093
Explosives Driver	M[1] 18					R2			M							R		
Crane Riggers who handle ordnance	R 18											M	M			R		
Personnel who operate category 3, non-cab cranes for moving ordnance on NAS, MCAS and other activities												M						
Navy and Marine Corps personnel who are directly involved in sentencing of conventional ammunition	M[7] 49														M			
Entry Level Personnel assigned as ROLMS/OIS-R operators and data base administrators who process and maintain records relating to ordnance assets										M[3, 7]				M[5]				
Explosive Ordnance Disposal (EOD) Personnel attached or assigned to billets which require enrollment in an explosive Qualification/Certification (Qual/Cert) Program										M[4]							M	

Table C-1. Explosives Safety Training (Continued)

Positions (Based on actual duties performed, not job title)	Navy Explosives Safety Courses																	
M = Mandatory R = Recommended	Basic Explosives Safety (AMMO-18/49)	Electrical Explosives Safety for Naval Facilities (AMMO 29)	Explosives Safety and Environmental Risk Management (AMMO-33)	Explosives Safety for Naval Facility Planning (AMMO-36)	Intermodal Dry Container CSC Reinspection (AMMO-43)	Naval Motor Vehicle and Railcar Inspection (AMMO-51)	ESO Orientation Course (AMMO-74)	Material Handling Equipment (MHE) Operator Course	Ammunition and Explosives Driver 12- Hour Training Course	Munitions Rule Training	Apprentice Trainer Course	Crane Safety (Non-Cab Operated Cat 3)	Rigging Practices	Ammunition Supply Ad-ministration	USN/USMC Conventional Ammunition Sentencing Course	Explosives Safety Stand Down	Material Potentially Presenting an Explosive Hazard (MPPEH)	Munitions Response Site Management A 4A 0093
Unexploded Ordnance (UXO) Personnel who conduct Operational Range Clearance (ORC) and/or range maintenance activities on Naval operational ranges										M[9]							M	

NOTES:

1. Attendance for Navy personnel is mandatory per SW020-AF-HBK-010. Attendance for Marine Corps personnel recommended, not mandatory, in accordance with MCO 5100.29 Volume 8 (series).

2. Marine Corps drivers and inspectors using unit vehicles are authorized to use AMMO-51-DL for operation, inspection, and preparation of tactical vehicles that are returning ammunition and explosives from ranges to local ammunition and explosives storage facilities.

3. Only required for an Ammunition Custodian (ROLMS/OIS-R operator) inputting NARs.

4. Not required for EOD personnel assigned outside the U.S. and its territories.

5. Satisfactory completion of the NALC OIS-R course satisfies this requirement.

6. Is recommended for Public Works Officers who sign out NAVFAC letter forwarding site approval packages to NOSSA.

7. Attendance for local host nation personnel at OCONUS locations recommended, not mandatory.

8. Not required for personnel working on a Munitions Response Site.

9. Not required for UXO personnel assigned outside the U.S. and its territories.

THIS PAGE INTENTIONALLY BLANK

APPENDIX D
PROCEDURE FOR ELECTRICAL TESTING OF GROUNDING SYSTEMS FOR ORDNANCE STORAGE AND OPERATING FACILITIES

GENERAL.

Sections I, II, and III below provide outlines which can be used by activities to develop their own test procedures for conductive floor testing, three-point fall-of-potential earth resistance testing, and bonding resistance testing.

SECTION I
CONDUCTIVE FLOOR TESTING

PURPOSE.

This document provides specific test procedures to be used in the performance of conductive floor testing in accordance with the requirements of paragraph 5-5.3.1

SCHEDULING.

This section should identify the frequency of the conductive floor testing.

Test methods detailed in this section require that the conductive floor testing be conducted every 6 months vice the 24 month period identified in paragraph 5-5. The purpose of using this example will be to identify that it will be acceptable, and in some cases necessary, to perform conductive floor testing at more frequent periods than the 24 months currently specified as the minimum.

Conductive floor testing shall be conducted every 6 months in accordance with the procedures described below.

RESPONSIBILITY.

This section should identify those offices or personnel responsible for performing the various functions required for conductive floor testing. It should also identify who is responsible for the coordination of the various personnel including the facility supervisor and electrical shop technicians.

It is also recommended that the test procedure for a facility be more detailed than the text provided below as to the responsibility for the performance of specific tasks. Among those responsibilities which should be detailed in this section are:

a. Scheduling of the conductive floor testing,

b. Coordination between (facility supervisor) and (personnel conducting electrical testing),

c. Providing all necessary test equipment and tools with personnel skilled in the operation of the equipment,

d. Ensuring that the test equipment used in the testing is calibrated in accordance with (facility acronym) requirements,

e. Ensuring that the conductive floor testing is conducted in accordance with the requirements of this procedure and that the test results are properly documented,

f. Analysis of test results,

g. Development and dissemination of test data.

Facility Supervisor.

Those tasks which could be best performed by the facility supervisor are given below in a sample format. Cautions and Warnings which should be included in this section at the applicable locations are also provided below:

Prior to the testing of a conductive floor, (facility supervisor) shall:

a. Verify that the structure does not contain any explosives dusts, flammable vapors, or exposed electro-explosive devices (EED)

CAUTION

Conductive floor testing shall be conducted only in areas where there are no explosives dusts, flammable or explosives vapors or exposed EEDs.

b. Ensure that the floor is clean and dry,

c. Brief the test team on any explosives hazards that may exist in the building at the time of the test,

d. Provide any personnel necessary to handle explosives,

⚠ WARNING

1. Only authorized ordnance handlers shall handle any explosives materials.

2. A minimum of two personnel shall be required to move explosives.

Person Responsible for the Operation of the Test Equipment.

Prior to the performance of any testing conducted as a part of the detailed test procedures discussed in the attachments, the test conductor shall ensure that all bonding straps have been removed between the grounding systems under test and any grounded ordnance items (as required herein).

Test Conductor.

Prior to the performance of any testing conducted as a part of the detailed test procedures discussed in Sections I, II and III (test conductor) shall:

a. Ensure that all bonding straps have been removed between the grounding systems under test and any grounded ordnance items (as required herein).

TEST HARDWARE.

The conductive floor resistance shall be measured with a [manufacturer and model number of the test equipment (along with serial numbers if applicable)] with the associated test loads.

a. A total of two electrodes weighing 5 pounds and having a dry, flat, circular contact area of 2.5-inches in diameter is required. The contact area shall have a surface of aluminum or tin foil of a minimum of 0.0005-inches thickness backed by a 1/4-inch thick layer of rubber. The surface of the electrode shall measure between 40 and 60 durometer hardness as determined by a Shore Type A Durometer in accordance with ASTM D2240.

b. Hardened file.

c. Navy electrician's knife.

d. Surface resistance test kit may be used in place of equipment specified by paragraph a above, provided the equipment collectively (i.e., meter and electrodes) comply with ANSI/ESD STM7.1.

SPECIFIC TEST REQUIREMENTS.

Both electrode-to-electrode and electrode-to-ground measurements shall be made.

Electrode-to-electrode measurements shall be made at five or more locations in each area or room. Each measurement result shall be recorded on the test data sheet. Specific details on the procedures to be used in conductive floor testing are given in Section 5.0.

Electrode-to-ground measurements shall be taken at a minimum of five locations (using a minimum of 2 grounding system reference points). Each measurement result shall be recorded on the test data sheet.

All measurements shall be taken with the electrode(s) a minimum of 3 feet away from any ground connection or from a grounded object that is resting on the floor.

SPECIFIC TEST PROCEDURES.

A (state manufacturer and model number of the equipment) shall be used for the testing of conductive floors.

⚠ WARNING

The (state manufacturer and model number specified above) is not approved for use in hazardous (classified) locations and shall not be used in any locations where there are explosives dusts, or flammable or combustible vapors.

(Test conductor) shall select the electrode configuration and location from the sketch of the facility provided in the base's Grounding System Test Plan.

The leads of the (type of equipment used) shall be configured as below, depending upon the type of test required.

Electrode-to-Electrode Testing

Two electrodes shall be placed 3-feet apart at five or more locations in each area or room. The electrodes are described under "Test Hardware". These electrodes must not be placed within 3 feet of a ground connection or from a grounded object that is resting on the floor.

One of the test lead's alligator clips shall be attached to each electrode.

Electrode-to-Ground Testing

A conductive floor grounding point or structural steel member shall be used as one of the electrodes and the other electrode shall be described under "Test Hardware".

One of the test lead's alligator clips shall be connected to an electrode as described under "Test Hardware". The other shall be attached to the conductive floor ground reference point(s) or structural steel members as detailed on the sketch of facility's grounding system test points contained in the (facility acronym) Grounding Systems Test Plan.

The ground reference point shall be properly prepared before testing. This may consist of filing the surface of the reference point or shaving of paint or corrosion using a knife.

Once (test conductor) has identified that the electrodes are properly connected, (test equipment operator) shall begin cranking the handle to apply the proper test voltage.

If the resistance value changes appreciably with time during a measurement, the value observed after the voltage has been applied for 5 seconds shall be the value recorded on the data sheet.

(Test conductor) shall record the test value on the data sheet.

(Test conductor) shall vary the electrode location and configuration and repeat the above steps until all of the data points required by the Grounding Systems Test Plan have been measured.

DATA ANALYSIS.

This section should contain the specific procedures to be used in the analysis of the conductive floor resistance data recorded as a result of this testing. Some example text which may be used in this section is given below.

The test results shall be averaged by (person reviewing the data) and entered onto the test data sheet at the time of the review of the test data.

No single value shall exceed 5 megohms.

The average electrode-to-electrode resistance shall be a minimum of 5,000 ohms for areas equipped with 120 volt service, 10,000 ohms for areas equipped with 120/240 or 208Y/120-volt service, and 20,000 ohms for areas equipped with 480Y/277 volt service.

All individual test points found to exhibit values of less than 20,000 ohms shall be reported to (facility supervisor) and (person responsible for the grounding systems for ordnance facilities at the activity).

The purpose of the above statement is to identify those locations that may present a particular hazard to personnel safety. For those floors in structures equipped with only 120 volt service, this minimum number could be reduced to 5,000 ohms.

POST-TEST PROCEDURES.

The procedures to be performed after the completion of the testing should be detailed in this section. An example of some of the items which should be included in this section is provided below:

a. Reconnect all ground straps disconnected prior to testing (recommend a facility representative),

b. Check to ensure all tools are removed from test area (recommend test conductor),

c. State the procedures to be used to assemble and forward a copy of test data and comments/recommendations and to identify those offices requiring a copy of the final report.

SECTION II
THREE-POINT FALL-OF-POTENTIAL EARTH RESISTANCE TESTING

PURPOSE.

This document provides specific test procedures to be used in the performance of three-point fall-of-potential earth resistance testing in accordance with the requirements of paragraph 5-8.2.2.

SCHEDULING.

This section should identify the frequency of earth resistance testing.

Three-point fall-of-potential earth resistance testing shall be conducted every 24 months in accordance with the requirements of paragraph 5-8.2.2 using the methods forwarded below.

RESPONSIBILITY.

This section should identify those offices or personnel responsible for performing the various functions required for earth resistance testing. It should also identify who is responsible for the coordination of the various personnel including the facility supervisor and electrical shop technicians.

It is also recommended that the test procedure for a facility be more detailed than the text provided below as to the responsibility for the performance of specific tasks.

Among those responsibilities which should be detailed in this section are:

a. Scheduling of the testing,

b. Coordination between (facility supervisor) and (personnel conducting the electrical testing),

c. Providing all necessary test equipment and tools with personnel skilled in the operation of the equipment,

d. Ensuring that the test equipment used in the testing is calibrated in accordance with (facility acronym) requirements,

e. Selection of test points,

f. Ensuring that the testing is conducted in accordance with the requirements of this procedure and that the test results are properly documented.

g. Analysis of test results,

h. Development and dissemination of test data.

Facility Supervisor.

Those tasks which could be best performed by the facility supervisor are given below in a sample format. Cautions and Warnings which should be included in this section at the applicable locations are also provided below.

Prior to the testing detailed in this procedure, (facility supervisor) shall:

a. Brief the test team on any explosives hazards that may exist in the building at the time of the test,

b. Provide any personnel necessary to handle explosives,

⚠ WARNING

1. Only authorized ordnance handlers shall handle any explosives materials.

2. A minimum of two personnel shall be required to move explosives.

Person Responsible For The Operation Of The Test Equipment

Prior to the performance of any testing conducted as a part of the detailed test procedures, (person responsible for the operation of the test equipment) shall:

a. Ensure that all test equipment to be used in the testing described in this document is properly calibrated and in good working condition,

b. Ensure that electrodes meeting the specifications detailed in the procedures are available.

Test Conductor

Prior to the performance of any testing conducted as a part of the detailed test procedures, (test conductor) shall:

a. Ensure that all bonding straps have been removed between the grounding systems under test and any grounded ordnance items (required herein).

TEST HARDWARE.

The following test hardware is required for the conduction of the testing described in this test procedure.

A (state manufacturer and model number of the test equipment) shall be used to conduct the earth resistance testing. The tester shall be configured as shown in figure D-1.

The test procedure should include a sketch of the configuration of the test hardware to be used in the resistance-to-earth testing. The enclosed figure provides an example of the configuration for a 4-terminal earth resistance tester.

a. Two reference electrodes of ½-inch diameter and minimum of 18-inches long of copper or steel (galvanized or stainless) shall be used in the testing,

b. Three insulated test leads of sufficient length to meet the requirements of the "Specific Test Procedures" paragraph are required for the performance of the testing detailed in this procedure,

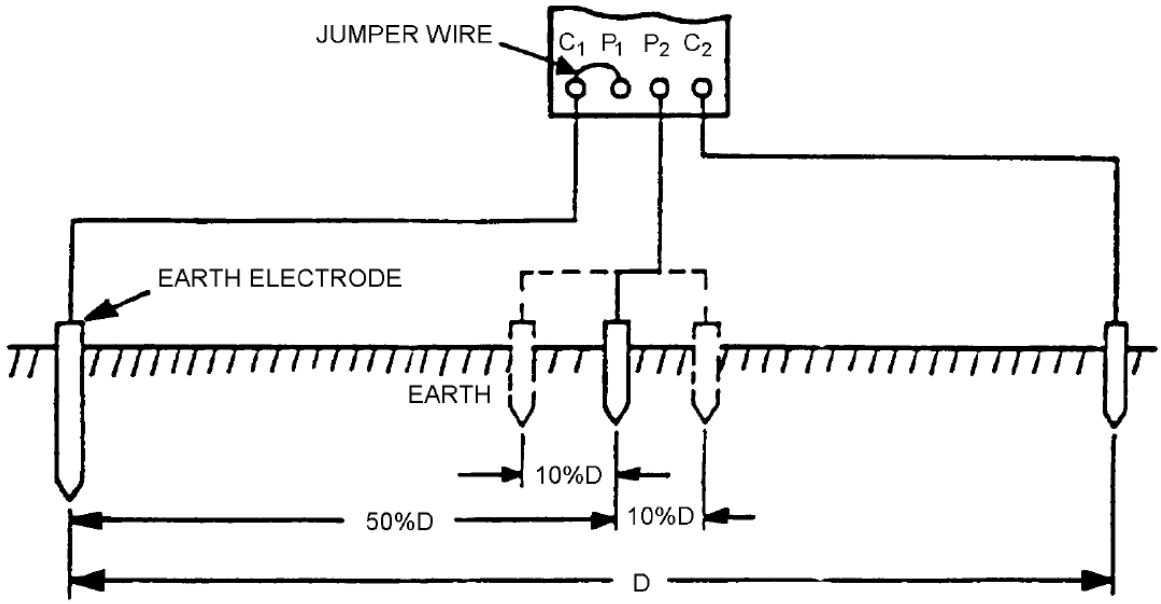

Figure D-1. Earth Resistance Testing Equipment Configuration

These leads may not be necessary for those locations in which permanent reference electrodes and interconnecting cable are provided at test wells.

a. Cotton coveralls are required.

SELECTION OF TEST POINTS.

The test points requiring three-point fall-of-potential testing are detailed on the test data sheet for the structure. These test points shall be as detailed in the Grounding Systems Test Plan.

CONFIGURATION OF REFERENCE ELECTRODES.

(Test conductor) shall ensure that the reference electrodes are configured as specified in the Grounding Systems Test Plan.

The electrodes shall be driven 8-inches into the earth by the (test equipment operator).

SPECIFIC TEST PROCEDURES.

The specific procedures to be used in the earth resistance testing must be detailed in this section. Such procedures will vary upon the type of equipment used. The text below provides example wording when using a 4-terminal digital earth tester for the resistance-to-earth testing.

(Test equipment operator) shall ensure that (state manufacturer and model number of test equipment) is properly configured for three-point fall-of-potential testing as shown in figure D-1. He shall verify that

the power to the tester is off and that the test lead for the C1/P1 electrode is disconnected from the tester.

(Test conductor) shall identify the item-under-test and identify the locations of the reference electrodes.

(Test equipment operator) shall install the reference electrodes described under "Test Hardware" at a depth of 8-inches. Specific electrode locations shall be identified by (Test conductor).

The remainder of this section should describe the specific procedures to be used in the conduction of the resistance-to-earth testing. The remaining paragraphs provide text that may be used for a 4-terminal digital earth tester.

(Test equipment operator) shall connect the C2 electrode of the test equipment to the most distant reference electrode. He shall also connect the closest reference electrode to the P2 electrode of the test equipment. The item-under-test electrode shall remain disconnected until otherwise directed by (Test conductor).

(Test conductor) shall prepare the test point and connect the test lead to the test point.

(Test conductor) shall signal to (test equipment operator) to make the resistance measurement. (Test equipment operator) shall connect the test lead to the C1/P1 electrode and confirm that the TEST CURRENT is set at NORMAL and the FILTER is switched out.

(Test equipment operator) shall switch the RANGE selector switch to the 2000 ohm range until the test value drops below the maximum value of the next lowest range. This process should continue until the measurement is made on the lowest range possible.

(Test equipment operator) shall notify (test conductor) of the measured value for the test point. (Test conductor) shall record the value on the data sheet for the facility.

(Test equipment operator) shall verify that the power to the test equipment is OFF and that the C1/P1 electrode has been disconnected.

Upon verification that the lead has been disconnected from the test equipment, (test conductor) shall remove the test lead from the test point and prepare the next test point.

(Test conductor) shall check the location of the reference electrodes and determine whether they need to be moved for the next measurement. Should the electrodes require movement, (test equipment operator) shall move the electrodes to the locations specified by (test conductor). Electrode installation and test equipment configuration shall be as detailed under "Test Hardware".

Repeat the above steps until all resistance-to-earth measurements have been made.

DATA ANALYSIS.

There are an endless number of procedures that may be used in the analysis of the earth resistance data. The procedures used can vary from the very simple to the very complicated (based on trend analysis of recorded data). The following text provides an example of a procedure that may be used in the analysis of earth resistance data.

No resistance-to-earth measurement shall exceed 25 ohms.

Any differences in resistance-to-ground values of greater than three ohms shall be documented and reported to (office responsible for the grounding systems for ordnance facilities) for further review.

POST-TEST PROCEDURES.

The procedures to be performed after the completion of the testing should be detailed in this section. An example of some of the items which should be included in this section are listed below.

a. Reconnect all ground straps disconnected prior to testing (recommend a facility representative).

b. Check to ensure all tools are removed from test area (recommend test conductor).

c. (State the procedures to be used to assemble and forward a copy of test data and comments/recommendations and to identify those offices requiring a copy of this final report.)

SECTION III
BONDING RESISTANCE TESTING

PURPOSE.

This document provides specific test procedures to be used in the performance of bonding resistance testing in accordance with the requirements of paragraph 5-8.2.6.

SCHEDULING.

This section should identify the frequency of bonding resistance testing.

Point-to-point bonding shall be conducted every 24 months in accordance with the requirements of paragraph 5-8.2.6 using the methods forwarded below.

RESPONSIBILITY.

This section should identify those offices or personnel responsible for performing the various functions required for bonding resistance testing. It should also identify who is responsible for the coordination of various personnel, including the facility supervisor and electrical shop technicians. It is also recommended that the SOP for a facility be more detailed than the text provided below as to the responsibility for the performance of specific tasks.

Among those responsibilities which should be detailed in this section are:

a. Scheduling of the testing,

b. Coordination between (facility supervisor) and (personnel conducting the electrical testing),

c. Providing all necessary test equipment and tools with personnel skilled in the operation of the equipment,

d. Ensuring that the test equipment used in the testing is calibrated in accordance with (facility acronym) requirements,

e. Selection of test points,

f. Ensuring that the testing is conducted in accordance with the requirements of this procedure and that the test results are properly documented,

g. Analysis of test results,

h. Development and dissemination of test data.

Facility Supervisor.

Those tasks which could be best performed by the facility supervisor are given below in a sample format. Cautions and Warnings which should be included in this section at the applicable locations are also provided below.

Prior to the testing detailed in this procedure, (facility supervisor) shall:

a. Brief the test team on any explosives hazards that may exist in the building at the time of the test,

b. Provide any personnel necessary to handle explosives.

⚠ WARNING

1. Only authorized ordnance handlers shall handle any explosives materials.

2. A minimum of two personnel shall be required to move explosives.

Person Responsible for the Operation of the Test Equipment.

Prior to the performance of any testing conducted as a part of the detailed test procedures, (person responsible for the operation of the test equipment) shall:

a. Ensure that all test equipment to be used in the testing described in this document are properly calibrated and in good working condition,

b. Ensure that electrodes meeting the specifications detailed in the procedures are available.

Test Conductor.

Prior to the performance of any testing conducted as a part of the detailed test procedures, (test conductor) shall:

a. Ensure that all bonding straps have been removed between the grounding systems under test and any grounded ordnance items (as required herein).

TEST HARDWARE.

The manufacturer and model number (and possible serial number) of the equipment chosen for use in bonding resistance testing should be detailed in this section. In the example provided below, even the configuration of the electrodes has been provided in this section for a 4-terminal megger.

a. A (state manufacturer and model number of equipment) tester shall be used in the measurement of point-to-point bonding resistances in ordnance storage and operating facilities. The C1 and P1 electrodes shall be shunted together and the C2 and P2 electrodes shall be shunted. All measurements shall be made between the C1/P1 and C2/P2 terminals.

CAUTION

The (state manufacturer and model number of the equipment) is not approved for use in hazardous (classified) locations. The test equipment shall not be located in any area where there may be explosives dusts, exposed electro-explosive devices (EED), or flammable or combustible vapors.

SELECTION OF TEST POINTS.

The test points to be used in the bonding resistance testing shall be as specified on the test data for the structure.

It is the responsibility of (test conductor) to make the connection of the test leads to the items-under-test. He will have the ultimate responsibility to determine the specific test point location.

SPECIFIC TEST PROCEDURES.

The specific procedures to be used in the bonding resistance testing must be detailed in this section. Such procedures will vary depending upon the type of equipment used. The text below provides example wording when using a 4-terminal digital earth tester for the bonding resistance testing.

Prior to conducting any point-to-point resistance testing, (test equipment operator) shall ensure that the test equipment is configured as shown in figure D-2.

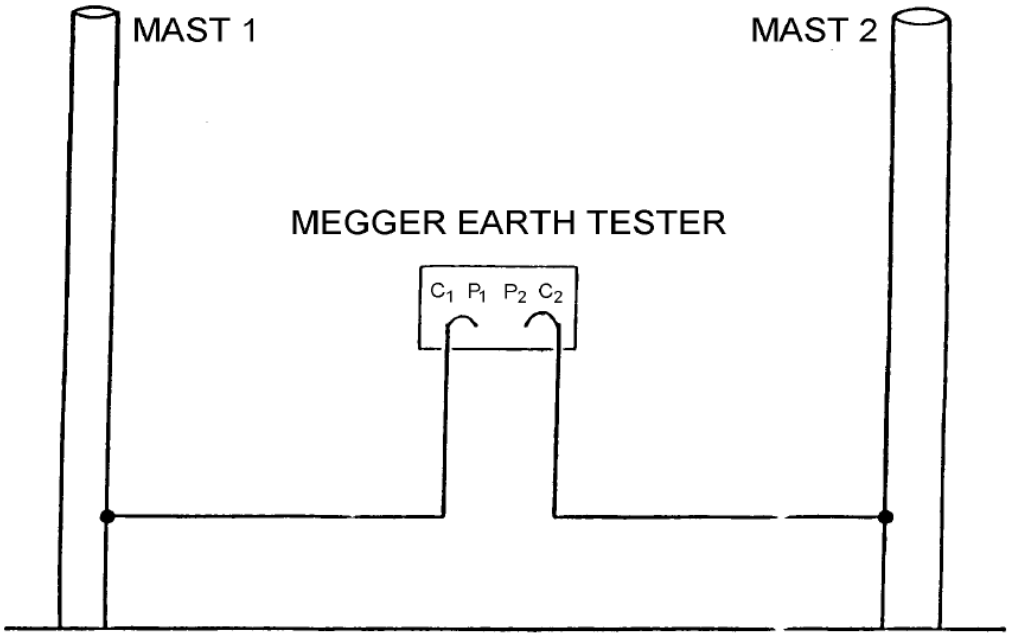

Figure D-2. Bonding Resistance Testing Equipment Configuration

Prior to conducting any of the testing discussed in this section, the resistance of the test leads to be used shall be measured by (test equipment operator) and recorded onto the data sheet by (test conductor).

(Test conductor) shall select the test points from the test data sheet provided in the Grounding Systems Test Plan.

(Test conductor) shall prepare the test points and make the connection between the test leads and the items-under-test.

CAUTION

The test leads shall be disconnected from the test equipment until which time the leads have been connected to the test points and (test conductor) has given the command to make the reading.

Once (test conductor) has made the connection between the test leads and the test points, he shall signal to (test equipment operator) to make the measurement.

At the command of (test conductor), (test equipment operator) shall connect the test leads to the test equipment as described under "Test Hardware".

CAUTION

Prior to connecting the leads to the test equipment, (test equipment operator) shall ensure that the power to the test equipment is OFF.

Prior to applying power to the test leads, (test equipment operator) shall ensure that the C1 and P1 electrodes are shunted together and the C2 and P2 electrodes are shunted, that the TEST CURRENT is set on NORMAL setting, and the FILTER is OUT.

(Test equipment operator) shall switch the RANGE selector switch working down from the highest to lowest range.

(Test equipment operator) shall notify (test conductor) of the test value recorded for the test point, that the power to the test equipment is being turned OFF and the test leads are being removed. (Test conductor) shall record the test results on the data sheet.

(Test conductor) shall prepare the next test point and repeat the above steps until all the data is gathered on each of the test points specified by the Grounding Systems Test Plan.

DATA ANALYSIS.

There are many different procedures that can be used in the analysis of bonding resistance test data. Some minimum evaluation criteria is forwarded below. An activity may also choose an analysis procedure that would be based on the analysis of the differences in bonding resistance values.

No bonding resistance of greater than one ohm will be allowed.

Any value recorded greater than 0.9 ohms shall be documented and reported to (office for the grounding systems for ordnance facilities) for further review.

POST-TEST PROCEDURES.

The procedures to be performed after the completion of the testing should be detailed in this section. An example of some of the items which should be included in this section are listed below.

a. Reconnect all ground straps disconnected prior to testing (recommend a facility representative),

b. Check to ensure all tools are removed from test area (recommend test conductor),

c. (State the procedures to be used to assemble and forward a copy of test data and comments/recommendations and to identify those offices requiring a copy of the final report.).

APPENDIX E
PROCEDURE FOR THE VISUAL INSPECTION OF GROUNDING SYSTEMS FOR ORDNANCE STORAGE AND OPERATING FACILITIES

General.

This appendix provides an outline which can be used by activities to develop their own written test procedures for visual inspection of grounding systems for ordnance storage and operating facilities.

VISUAL INSPECTION PROCEDURE

PURPOSE.

This document provides detailed procedures to be used in the visual inspections of lightning protection and grounding systems for ordnance storage and operating facilities. Figure E-1 provides a checklist to be used during the visual inspections to ensure all types of grounding systems are inspected and to provide documentation of the visual inspection.

It is not required that the visual inspection procedure contain a checklist as an attachment. This procedure has been designed with a checklist to show how a checklist may look and how it can be incorporated into a visual inspection procedure.

INSPECTION TEAM MEMBERSHIP.

The procedure is written as if the visual inspections are to be conducted by a team consisting of representatives from several organizations at the station. It is up to the Commanding Officer of the station to determine the make-up of the visual inspection team. It is recommended that more than one person conduct the visual inspection because it is likely that a diversified group of inspectors will likely focus on items associated within their respective work areas. It is recommended that the building supervisor participate in the visual inspection regardless of whether he becomes a member of the team because he is responsible for the day-to-day explosives operations in the building and he will be able to conduct unofficial "spot" inspections on a continuous basis.

However, the building supervisor is not required to be a member of the team.

The membership of the inspection team should be detailed in the procedure. The team leader should be listed first with an identification that this member shall act as the team leader. The size of the team is not restricted. It may consist of only one or two members or it may consist of a large group. Each facility may decide what is best for their application.

DATE: _____ BUILDING: _____

INSPECTOR(S): _____

1. LIGHTNING PROTECTION SYSTEMS	ACCEPTABLE Y/N	COMMENTS
A. Masts, overhead wires, air terminals, properly supported.		
B. Down conductors continuous? (Less than 1/3 of strands broken, no sharp bonds or kinks.		
C. No part of structure obviously outside of zone-of-protection?		
D. No non-bonded item within sideflash distance of lightning protection system or frame of structure?		
E. Integral lightning protection system components (air terminals and down conductors) all present, undamaged, and free of corrosion?		
2. ORDNANCE GROUNDING SYSTEM	**ACCEPTABLE Y/N**	**COMMENTS**
A. Clearly marked to preclude misidentification?		
B. Isolated from other grounding systems internally?		
C. Connection to ground girdle intact?		
D. Sufficiently supported?		
E. Ground reels isolated from structure?		
F. Attachment to connector adequate?		

Figure E-1. Visual Inspection Checklist (Sheet 1 of 4)

DATE: _____ BUILDING: _____

INSPECTOR(S): _____

3. EQUIPMENT/STRUCTURE BONDING	**ACCEPTABLE Y/N**	**COMMENTS**
A. No isolated structural components?		
B. All equipment within sideflash distance of structure bonded?		
C. Structural bonding cables ≥ 1/0? Equipment bonding cables ≥ #6?		
D. Only braided straps installed on equipment that vibrates or subject to significant movement?		
E. Paint on bond point? (If so, give pull test.) Paint or corrosion sufficient to provide isolation? (If so, conduct electrical test to verify continuity.)		
4. POWER SERVICE GROUND	**ACCEPTABLE Y/N**	**COMMENTS**
A. Ground attachment point free of corrosion? Tightly connected?		
B. No obvious breaks in bonding cables? (To ground rod or bond to secondary girdle.)		

Figure E-1. Visual Inspection Checklist (Sheet 2 of 4)

DATE: _____ BUILDING: _____

INSPECTOR(S): _____

5. STATIC GROUNDING SYSTEM	ACCEPTABLE Y/N	COMMENTS
A. Bonding/Grounding cabling continuous? Not grounded thru gas, steam, air lines, dry sprinkler piping, or lightning down conductor.)		
B. Conductive floors/mats/table tops clean, relatively smooth, and free of cracks?		
C. Grab bars securely supported, not painted? Installed just outside at entrance to area with a conductive floor?		
D. Ground reel connectors attachment to cables adequate?		
E. Conductive chairs, carts, and work stations clearly labeled as conductive/anti-static?		
6. PORTABLE/INSTALLED BONDING STRAPS & GROUND CABLES	**ACCEPTABLE Y/N**	**COMMENTS**
A. Electrical test within last 6 months?		
B. Connectors properly attached?		
C. Attachment point(s) free of paint?		
7. FENCES	**ACCEPTABLE Y/N**	**COMMENTS**
A. Bond across gates?		
B. Gates grounded?		

Figure E-1. Visual Inspection Checklist (Sheet 3 of 4)

DATE: _____ BUILDING: _____

INSPECTOR(S): _____

8. INSTRUMENTATION GROUND	ACCEPTABLE Y/N	COMMENTS
A. Clearly marked to preclude confusion with ordnance ground?		
B. Isolated from other grounding systems?		
C. Bonded to secondary girdle?		

Figure E-1. Visual Inspection Checklist (Sheet 4 of 4)

The visual inspections shall be conducted by a team made up of representatives from the following organizations:

a. XOO (Inspection Team Leader)

b. Building Supervisor

Responsibility.

This section should list the organizations responsible for the various functions to be performed as a result of the visual inspection. Among those responsibilities which should be documented in this section are:

a. Identifying the Inspection Team leader,

b. Documenting the inspection (possible through the use of the checklist),

c. Scheduling of the visual inspections with the Building Supervisor and the other team members,

d. Providing inspection team members with a data package on the facility including any grounding system waivers or items grandfathered, a copy of the grounding system sketch of the facility from the Grounding System Test Plan, and a copy of the most recent electrical test data for the facility.

In addition, it is recommended that the responsibilities of the building supervisor be listed in this section. An example is given below.

a. The Building Supervisor is responsible for:

b. Ensuring that the facility is available for the inspection team.

c. Ensuring that the building is free of any exposed explosives, explosive dusts, or exposed electro-explosive devices (EED).

d. Removing any sources of flammable or combustible vapors (as practical) and briefing the visual inspection personnel on the location and type of hazardous (classified) locations remaining in the facility.

e. Briefing the visual inspection team on any explosives hazards that may exist in the building at the time of the inspection.

f. Briefing the inspection team on any construction or modifications made to the facility since the last visual inspection.

Protective Equipment.

This section should detail any protective equipment that will be required during the inspections. An example is given below.

The following protective equipment is required for personnel working in magazines or explosives operating buildings:

a. Safety glasses

b. Safety shoes (non-conductive)

c. Cotton coveralls

VISUAL INSPECTION PROCEDURES.

This section should provide details as to the procedures to be used during the inspections. An example of some possible wording is given below.

figure E-1 provides a checklist of the items to be inspected during the visual inspections. Both visual and physical (where practical) inspections of bonding connections shall be conducted. The purpose of the inspection is to identify obvious points of non-compliance with the requirements of paragraph 5-8.3. All bonding points shall be visually inspected for potential isolation due to paint of corrosion. Any evidence of paint or corrosion shall be noted in the figure E-1, "Visual Inspection Checklist" Comment column. (Organizational code) shall provide a statement on the Visual Inspection Checklist as to the need for an electrical bonding test to confirm that the corrosion or paint does not influence the effectiveness of the bonding connection. Any necessary bonding tests shall be conducted in accordance with the requirements of (specific SOP number).

Any modifications to the structure made within the last 24 months shall be reviewed in detail to ensure they were made in accordance with the above requirements. Any bonding or grounding points' test results (from the last electrical test) which differed greatly from other test data gathered during the same test period shall also be examined in detail.

POST-INSPECTION PROCEDURES.

This section should specify any procedures which will be required to be performed at the completion of the inspection. An example of the type of item which should be addressed in this section is a

discussion of who will review the documentation and determine the corrective action required. This section should also identify how any corrective actions shall be implemented and how any necessary work requests will be implemented. The forwarding of the documentation gathered as a result of the visual inspection, along with any comments resulting from the analysis of the data and any corrective actions taken, to all necessary organizations (such as the inspection team members and the Building Supervisor) shall also be discussed in this section.

RECORDS.

This section should identify the storage of records of the visual inspections. Some minimal text is provided below.

Figure E-1, “Visual Inspection Checklist” data, shall be stored in a data file for retrieval for use as required for trend analysis or for use by inspection personnel.

THIS PAGE INTENTIONALLY BLANK

APPENDIX F
SAFETY REGULATIONS FOR USING ENERGETIC MATERIALS AT RESEARCH, DEVELOPMENT, AND TEST AND EVALUATION (RDT&E) ACTIVITIES

F-1. PURPOSE.

The purpose of this appendix is to acquaint personnel engaged in research, development, test, and evaluation (RDT&E) using energetic materials with the characteristics and hazards associated with experimental operations, and to establish standard safety regulations in a manner which will ensure appropriate corporate Navy management without jeopardizing the pursuit of a science and engineering. RDT&E of energetic materials is an interdisciplinary endeavor requiring innovative technical professionals to explore ideas, create new energetic materials, make scientific discoveries, describe fundamental principles, understand and validate new theories, test and evaluate new designs, and provide new products.

F-1.1. RDT&E activities must function under the guidance of a local safety manual or other instructions which implement local directives concerning explosives safety and other programs as defined in the current revisions of OPNAVINST 5100.23 (series) OPNAVINST 3500.39 (series) and MIL-STD-882 (series).

F-1.2. The regulations of OP 5 apply to RDT&E activities unless specifically superseded or otherwise clarified in this volume.

F-1.3. The provisions of this appendix do not apply when RDT&E activities are manufacturing or producing fleet issued products. RDT&E activities conducting manufacturing or producing fleet-issued products must comply with the requirements of other chapters and appendices of NAVSEA OP 5.

F-1.4. Some facilities designed for RDT&E operations may be inactive or in a standby status for significant periods of time. When such facility needs to be used again, a comprehensive inspection and risk assessment involving management must be conducted and the responsible local explosives safety office must be contacted. Any necessary repair work must be accomplished prior to returning the facility to an active status. Refer to chapter 8 for site approval requirements.

F-2. SCOPE.

This appendix provides mandatory and advisory safety regulations for Navy activities that perform RDT&E operations involving energetic materials and devices containing energetic materials. All RDT&E activities must comply with the general safety requirements of chapters 1 through 15 and with applicable Navy directives listed in appendix B, unless otherwise specified and clarified in this manual. The Navy activities authorized to utilize the guidance of this appendix are listed in table F-1 If the Navy activity listed in table F-1 is a tenant command, the requirements of paragraph 1-4.3.5 must be met in order to identify the responsible explosives safety officer for operation being conducted under the guidance of this appendix, such as explosives safety site approval cognizance, the generation of A&E SOPs and the Qual/CERT program for A&E personnel. Any other applications for utilizing this appendix by Navy activities not listed in table F-1 require Naval Ordnance Safety and Security Activity (NOSSA) approval.

Table F-1. List of Activities that Perform RDT&E Operations with Energetic Materials

Commanding Officer Naval Surface Warfare Center Crane Division 300 Highway 361 Crane, IN 47522-5001	Commander Naval Air Weapons Station Division China Lake 1 Administration Circle Explosives Safety, MS 1331 China Lake, CA 93555-6001
Commanding Officer Naval Surface Warfare Center Indian Head Explosive Ordnance Disposal Technology Division 3767 Strauss Avenue, Suite 201 Indian Head, MD 20640-5150	Commander Naval Air Warfare Center Aircraft Division 22347 Cedar Point Road Unit 6 Patuxent River, MD 20670-1161
Director Naval Surface Warfare Center Indian Head Explosive Ordnance Disposal Technology Division Detachment Yorktown P. O. Box 160 Yorktown, VA 23691-0161	Commanding Officer Naval Surface Warfare Center Indian Head Explosive Ordnance Disposal Technology Division Systems Integration Department (G) Belt Road, Bldg. 3342 Picatinny Arsenal, NJ 07806-5000
Commanding Officer Naval Surface Warfare Center Dahlgren Division 6149 Welsh Road, Suite 203 Dahlgren, VA 22448-5130	Officer-In-Charge Explosive Ordnance Disposal Mobile Unit Twelve Detachment Dahlgren 5002 Caskey Rd, Bldg. 1369 Dahlgren, VA 22448-5142
Commanding Officer Port Hueneme Division Naval Surface Warfare Center 4363 Missile Way Port Hueneme, CA 93043-4307	Naval Support Activity Naval Post Graduate School 1 University Circle Monterey, CA 93943
Commanding Officer Naval Surface Warfare Center Panama City Division 110 Vernon Avenue Panama City, FL 32407-7001	Commanding Officer Naval Undersea Warfare Center Division 610 Dowell Street Keyport, WA 98345-7610

Table F-1. List of Activities that Perform RDT&E Operations with Energetic Materials (Continued)

Commanding Officer Carderock Division Naval Surface Warfare Center 9500 MacArthur Blvd. West Bethesda, MD 20817-5700	Director Naval Surface Warfare Center Corona Division Detachment Seal Beach Weapons Evaluation Branch 800 Seal Beach Blvd Seal Beach, CA 90740-5000
Commander Naval Air Warfare Center Weapons Division 575 I Avenue, Suite I Point Mugu, CA 93042-5040	Commanding Officer Naval Undersea Warfare Center Newport Division 1176 Howell Street Newport, RI 02841-1708
Director Office of Naval Research Pasadena Detachment Childs Way, Building 1 1012 West 36th Street Los Angeles, CA 90089-1022	Commanding Officer Scientific Development Squadron One Naval Air Station Patuxent River, MD 20670-1560
Superintendent Office of Naval Research Bay St. Louis Detachment Stennis Space Center Bay St. Louis, MS 39529-5004	Commanding Officer Naval Surface Warfare Center Corona Division, Detachment Fallbrook/ Hawthorne Code-RS40 Expeditionary System Evaluation Division 700 Ammunition Road Fallbrook, CA 92028-3187
Director Office of Naval Research Boston Detachment Barnes Building 495 Summer Street Boston, MA 02210-2109	Customer Liaison Naval Research Laboratory Chesapeake Bay Detachment 5813 Bayside Road Chesapeake Beach, MD 20732
Commanding Officer Naval Research Laboratory 4555 Overlook Avenue SW Washington, DC 20375-5320	Officer in Charge Port Hueneme Division NAVSURFWARCEN DET White Sands Missile Range, NM 88002-5510
Commanding Officer Naval Research Laboratory Detachment Stennis Space Center Bay St. Louis, MS 39529-5004	Commanding Officer Expeditionary Exploitation Unit ONE 3341 Strauss Ave, Bldg 900 Indian Head, MD 20640

F-3. QUALIFICATION/CERTIFICATION.

RDT&E activities included in table F-1 are authorized to perform RDT&E operation with energetic material whose properties, including safety and sensitivity to initiation, are unknown or poorly characterized. The hazard of this type of work are unique and require a thorough hazards analysis as well as a Qual/cert approach that is tailored to the specific type of work done at each RDT&E activity. RDT&E operations must comply with the current revision of OPNAVINST 8023.24 (series).

F-4. STANDARD OPERATING PROCEDURES (SOP).

RDT&E activities must comply with paragraph 2-1.1, except as clarified here:

F-4.1. SOPs can be used to prescribe the common portions of similar jobs. The responsible explosives safety office must endorse the use of supplemental documentation that augments these SOPs sufficiently to perform tasks in a safe and responsible manner per paragraph 2-1.1.

F-4.2. Supplemental documentation may include the use of appendices to general SOPs which prescribe the approved process for making specific energetic materials within allowable variation limits.

F-4.3. Supplemental documentation may also include the use of review forms, lab or test procedures, mix sheets, test plans, supplement hazard analyses, signed and witnessed notebooks, or the equivalent, which refer to, or are referred to by, general SOPs and prescribe the additional step-by-step procedures required to perform a specific task.

F-4.4. Line management has control and responsibility for establishing a uniform system of supplemental documentation that augments general SOPs sufficiently to perform tasks.

F-4.5. When explicit step-by-step procedures as defined by NOSSAINST 8023.11 (series) are not possible because the specific procedure is not yet established, an approved narrative or plan of action can be used to describe the procedures or approach planned. The approval process includes a documented peer review, a hazard analysis or risk assessment, and approval from management. Once the specific procedure is established, an SOP must replace all narratives or plans of action previously used to perform the operation.

F-5. HAZARD ANALYSIS/RISK ASSESSMENTS.

Standardized peer review systems as defined by paragraph F-7 must determine the appropriate level of hazard analysis to be performed for each task.

F-5.1. A qualitative hazard analysis compliant with 29 CFR 1910.119, OPNAVINST 3500.39 (series) and/or MIL-STD-882, (as applicable to the RDT&E activity's mission) must be endorsed by management, and will be used in preparing all SOPs and supplemental documentation (as applicable).

F-5.2. At the discretion of peer review team, a quantitative risk assessment as defined by 29 CFR 1910.119 may be necessary for specific new energetic materials processes which implement

new technology. In this event, the quantitative risk assessment would be based upon available data and results from actual inert operation of the new process.

F-5.3. The Hazard Control Briefing (HCB) must be based upon the Preliminary Hazards List (PHL) or other qualitative hazard analysis compliant with 29 CFR 1910.119, OPNAVINST 3500.39 (series), and/or MIL-STD-882 (series).

F-6. SPECIAL CIRCUMSTANCES.

The requirements of this document must be followed to the maximum extent possible. It is realized, however, that it is not always possible to cover all potentially hazardous operations and procedures in a document like this, especially for organizations involved in RDT&E of energetic materials and ordnance items containing energetic materials.

F-6.1. REQUEST FOR SPECIAL CIRCUMSTANCES. Any request to the Commander of the RDT&E activity for special procedures or operations must include a mishap risk assessment (MRA) prepared in accordance with appendix A of MIL-STD-882 (series) or a qualitative hazard analysis compliant with 29 CFR 1910. 119 and OPNAVINST 3500.39. The following areas should be considered in request for special procedures or operations:

a. Initiation sensitivity,

b. Quantity of energetic material,

c. Anticipated energy output,

d. Rate of energy release,

e. Potential for throwing fragments (shrapnel),

f. Reliability of the initiation system (probability of event),

g. Potential for personnel exposure,

h. Consequences of unplanned event (incident), and

i. Potential mitigation measures.

j. Storage requirements.

F-6.2. UNKNOWN/UNDOCUMENTED MATERIAL. It is necessary for RDT&E facilities to handle and evaluate energetic material and ordnance items containing energetic material that is either unknown or undocumented (for example, ordnance items obtained from friendly or hostile foreign nations) for which full compliance with paragraph 11-11 is not feasible. Extreme care needs to be taken to avoid exposing such materials to shock, impact, temperature extremes, and ignition sources during handling and storage. Unknown/undocumented material and ordnance items must be treated as HC/D 1.1 and must not be stored with other standard or experimental ordnance and energetic materials as required by paragraph 11-2.2.2.1. The policy is to evaluate the material at the smallest scale possible in order to get preliminary data on the hazardous nature of the material. At a minimum, a yearly visual inspection for changes in the physical condition of each device or material sample must be performed and results recorded and kept by the RDT&E facility and the responsible ESO. At the

discretion of the responsible ESO, additional explosives safety controls may be implemented to manage additional risks. If there is reason to suspect the energetic materials of an item are Nitrocellulose/Nitrate based, the differential heat signature of the item in comparison to its surroundings must be measured and recorded at least monthly and kept by the RDT&E facility and the responsible ESO. The measuring method can be non-destructive or non-intrusive (such as an IR meter).

F-7. PEER REVIEW.

RDT&E operations with energetic materials must not be performed independent of peer review process. The purpose of peer review process is to ensure that safety concerns are addressed by more than one technically competent professional. Peers are defined as colleagues who can understand the work and can assess the potential hazards associated with it. RDT&E activities will establish appropriate peer review processes (such as NMRC, PRC, or equivalent). The peer review process for RDT&E activities shall be determined locally and documented in the RDT&E activity's local safety instruction.

F-7.1. PEER REVIEW PROCESS. RDT&E activities must review the characteristics of new materials, new processes, or modification to existing materials and/or processes to grant approval for their use. RDT&E activities may identify more than one review to support different organizational elements the peer review process applies to:

a. When a process is planned for scale-up from proof-of-concept to laboratory to pilot plant, or

b. When a new processing technology is planned for use, or

c. When processes, equipment or facilities have not previously been used for energetic materials, or

d. When processes, equipment or facilities have been modified to produce a different energetic material or product, or

e. When processes, equipment or facilities have not been maintained according to the preventative maintenance plan.

F-7.1.1. New materials are defined as those substances or mixtures of compounds not previously reviewed or tested by the organization planning to use them, whose safety, background or chemistry are unknown, and which, when used, might subject the individual or group using them to possible injury by inadvertent ignition, detonation or poisoning. The peer review must examine available data including physical properties, chemical inter-reactivity, thermal stability, and relative sensitivity to impact, friction and electrostatic discharge. If no specific data is available for the material of interest, the characteristics will be assessed by analogy to similar materials. The decisions of the peer review, and the criteria used to make those decisions, must be documented.

F-7.2. MANAGEMENT REVIEW. All work with energetic materials at Navy RDT&E activities must be reviewed and approved by appropriate managers as determined by the peer review process for the purpose of ensuring that directives are satisfied. The required management approval is based on compliance with local hazard analyses policy and instructions or as determined by the Command. The level of required review is established based on the level of identified hazard and accepted risk.

F-8. SHIELDING GUIDELINES.

Management and the responsible explosives safety officer must document their policy on shielding requirements. Policy must incorporate the requirements for personnel protection in paragraph 8-4.1.4.1 and those for designing shields in paragraph 7-7.4. These are from requirements in Defense Explosives Safety Regulation (DESR) 6055.09 and in MIL-STD-398A, Shields, Operational for Ammunition Operations, Criteria for Design of and Test for Acceptance. A collection of information on shielding is provided in the following paragraphs as guidance concerning how RDT&E facilities should approach shielding design. It is not necessary to perform an explosive test for each shield type. However, at least one explosive test shall be performed to verify the calculation method used by the activity.

F-8.1. SHIELDING OVERVIEW. Shields are often used to protect against hazard beyond those for which personal protective equipment are effective. OSHA shields are for non-explosive operations and are not authorized for energetic work. Protective shields provide barriers for energetic materials removed from storage but are at rest awaiting an operation. Operational shields are for tasks involving those energetic materials. All explosive shields protect against fragments, blast overpressure, and heat from accidental detonation or burning of energetic materials, and operational shields may also include intentional reactions. For intentional reactions, shields are durably constructed of reinforced concrete or steel for repeated use. Such shield may contain ports for photography and can be so effective that personnel are located next to them. Other shields for intentional reactions could protect instrumentation or other property at a firing site when personnel are remotely located. Operational shields for accidental explosions when attended are often transparent and are either fixed in front of equipment with the operator fully behind the shield or in front of process that allows access with hands while protecting head and torso. The former is usually permanently mounted along with the equipment, whereas the latter could be moved and mounted whenever required. When protecting against accidental explosions with transparent shields, the quantity of energetic material is often less than 10 grams to permit effective protection for head and torso in close proximity while avoiding devastating injury if hands and arms are exposed. Gloves that extend up the forearms will provide additional protection to those exposed parts. Examples of operations with increased risk and where energy is put into the process cutting, shaving, synthesizing materials, the use of conditioning ovens, mixing of chemicals where a reaction may occur, mixing (hand or mechanical), pressing, screening, punching, sawing, and drilling. If the hazard analysis shows the level of risk is acceptable, then personnel shielding may not be required. Shielding can still be used in this situation to provide additional protection, provided the shield itself does not become a hazard in the event of an incident. If the hazard analysis indicates an incident is above an acceptable risk level, then operational shielding must be provided.

F-8.2. OSHA SHIELDING. Shielding providing protection from OSHA hazards, such as breaking glass, chemical splash, non-explosive pressure bursts, steam leaks, pressure leaks, hot surfaces, cryogenic fluids, are exempt from the requirements of paragraph F-8.1. Shielding must be secured and shall protect from the hazard it is being used for. Commercially procured laboratory shields will typically provide this type protection.

F-8.3. PROTECTIVE SHIELDING. Shielding used to protect instrumentation or energetics at rest is exempt from the requirements of this appendix and does not need to be explosive certified. Any type of shielding can be used to provide this protection since no energy is being placed into the energetic, and

there is minimal risk involved. Examples of where this might be applied are at a staging area between operational steps, at a receiving area in a laboratory, data recording devices or for short-term storage.

F-8.4. OPERATIONAL SHIELDING.

a. Shielding used for personnel protection for high-risk attendant operations, as determined by a hazards analysis, must be tested in accordance with MIL-STD-398A. Shielding used for intentional reaction of energetic materials must meet the requirements of paragraph F-11.2 and be tested in accordance with MIL-STD 398 (series).

b. Shielding used for personnel protection at a low risk attendant operation, strictly for additional protection in the event an incident occurs, are exempt from the requirements of MIL-STD-398 (series), but must be tested to ensure they do not produce additional hazards were an incident to occur. Shields for such operations can typically be designed to provide direct blast, fireball, and fragment protection for up to 50 grams Hazard Class/Division 1.1 and up to 400 grams of Class/Division 1.3 (dependent on the material, burn rate, pellet size, etc.). Testing is performed to validate that fragment protection is provided, the shield remains intact when subjected to the pressure loadings, and that the fireball resulting from the accidental fire or detonation does not impinge on the head and torso of the operator performing the operation.

c. When a high-risk operation must be conducted as an attendant operation and shielding requirements of MIL-STD-398 (series) cannot be met, all pertinent information must be forwarded to NOSSA for review and approval. This information shall include the details of personnel protection and shielding being provided, test data to show that for the quantities of energetics involved the shield would not produce additional hazards during an incident, a description of the operation being conducted, and justification for performing an attended operation instead of a remote operation. The same personnel protection concerns as above apply.

F-8.5. TESTING OF THE SHIELD DESCRIBED IN SUBPARAGRAPH A., ABOVE. Shield testing requirements for Type F-8.4.a shields are described in MIL-STD 398 (series). With this type shield, personnel are provided protection, at the torso and head, from overpressures exceeding 2.3 psi, fragments with energies of greater than 58 ft-lbs, and thermal flux greater than 37.7 kW/m2 for a one-second exposure (calculated from MIL-STD-398 equation). However, there will be substantial injury to the operator's hands and arms as a result of the blast or fire. A safety factor of 1.25 times the quantity of explosives involved is used to certify the shield. The test takes into consideration the shield thickness, dimensions, and fasteners and is done to replicate as closely as possible the actual operating parameters and conditions. Test the shield for the specific fragment hazard to be encountered, or select the worst fragment scenario. A successful test is described as an intact shield, no fragment penetrations, no pressure readings greater than 2.3 psi at the pressure gages positioned at the standing operator's head (65 inches above floor level) and the sitting operator's head (31.5 inches above floor level), and thermal flux and exposure time limited to prevent the onset of second degree burns (heat fluxes and exposure times experienced by personnel should be less than that given by the equation where “t” is the time in seconds that a person is exposed and “q” is the received heat flux in kW/m^2 at these same locations.

F-8.6. TESTING OF THE SHIELD DESCRIBED IN SUBPARAGRAPHS B. AND C., ABOVE. These type shields will provide operator protection from the direct effects of an incident, such as the blast, fireball, fragments, and thermal flux. The operator will still be impacted by overpressure and thermal flux. Testing has shown that the fireball moves upwards and away from the operator and the shielding provides a very high level of thermal flux protection. Fragments will be contained by the shield. The operator will experience severe injury to hands and arms, and overpressure injuries to the head as well.

Though these injuries can be considered serious, they would have been much worse, if not fatal, had a shield not been used. Shield testing requirements for Shield Types F-8.4b and F-8.4c are: 1) test them at 1.25 times the desired explosive quantity, and 2) simulate the work environment and operating conditions as close as possible (the guidelines of MIL-STD 398 (series) should be used for location of pressure and thermal gages and for setup of the test area). A test is considered successful when the shield remains intact with no fragment penetrations, and the resulting fireball does not impact the operator's head or torso. The pressure and thermal flux data gathered will primarily be used to help improve future designs.

F-8.7. DATA RECOVERY. The data to be collected as part of the required testing must include overpressure and thermal measurements, photographs to document the extent of shield damage, and high-speed camera footage of each test. All data should be incorporated into a final report that documents information for the shield.

F-8.8. DESIGN INFORMATION. As a result of testing existing shields, certain principles can be generalized to aid in the design of new shields.

F-8.8.1. Attenuation of Blast Pressure Wave. The attenuation of the blast pressure wave occurs from the increased path length to the operator, and from the blast pressure wave turning a corner. The key issues involved with controlling the blast pressure are increased travel length and the shield remaining intact when impacted by the pressure wave. The longer the travel distance, the lower the blast pressure becomes. Thus, increasing the width and height, even if cutouts for arms are retained, can greatly reduce the blast pressure experienced by the operator, as required by MIL-STD-398 (series). For an attendant operation where the operator is intimately involved in the process being performed (as in the use of cutouts for the arms), as the quantity of explosives increases, a point is reached where overpressure protection cannot be provided unless the function is conducted remotely and the operator removed from the process.

F-8.8.2. Materials of Construction. Operational shields made of polycarbonate (PC) or polymethylmethacrylate (PMMA) offer significant overpressure reduction when the PES is small. Shields made of PC and PMMA are also effective in stopping fragments. Paragraph 8-4.1.4.1 authorizes the use of steel, or other suitable material, for protection against quantities of explosives less than 15 pounds.

F-8.8.3. Protection from Fragments. Shields of 0.5 inch PC can stop fragments from small charges of light confinement. For example, a 0.5 inch thick PC shield has been demonstrated to stop fragments from a 0.0625 inch thick steel sleeve fitted over a 2.8 gram pellet of PBXN-5 , (or equivalent) of 0.5 inch diameter when detonated 7 inches in front of the shield. The PC shield thickness may need to be adjusted when increasing the explosive quantity or when changing the degree of confinement of the explosive, if adequate protection from fragments is to be provided. This is the reason why shields must be tested for the application they are to be used for, especially when fragmentation is a possibility.

F-8.8.4. Protection from Thermal Flux. Shields of 0.5 inch PC or PMMA provide excellent protection from the thermal flux associated with the detonation of small amounts of energetic material. For example, a 0.5 inch PC shield has been demonstrated to provide complete protection from the thermal flux generated by about 12 grams NEW of PBXN-5 when detonated 7 inches in front of the shield.

F-8.8.5. Protection from the Fireball. When the quantity of energetics increases beyond a certain level, the fireball no longer moves upward and away from the operator, but begins to come out through the arm cutouts and to roll over the top of the shield. Testing, for the energetic material involved, is required to ascertain that the fireball does not impinge on the operator's head or torso. Conservatively

speaking, a 36 inch high, 18 inch wide, 3/8 inch thick PC shield, with steel sidewalls, well secured at the base, top, and to the rear wall, will provide operator fireball protection for up to 200 grams Hazard Class/Division 1.3 material.

F-8.8.6. Securing Shields. The issues involving the mounting of shields include the ability of the mounting method to survive the shock loading, and the Table withstanding the vibration and rebound resulting from a detonation. It would not do for the shield to remain intact, but for the operator to be hit by the shield or table. In general, mounting shields in a vertical position on the top of an unanchored Table and securing them only at the base is normally sufficient to prevent the shield from impacting the operator's head when the energetic material quantity is small (about 3 grams or less Hazard Class/Division 1.1). However, the top of the shield may need to be restrained and the Table anchored when the energetic material quantity increases from 3 to 10 grams Hazard Class/Division 1.1. Increasing the quantity beyond 10 grams will more than likely require the Table to be anchored and the shield to be better secured. For Hazard Class/Division 1.3 materials, vibration and overpressure are almost non-existent during an incident and the securing method does not have to be as strict. As discussed earlier, testing will clearly point out problems with the method used for securing shields.

F-8.8.7. Shield Hardware. Sometimes the things we design to provide protection inadvertently include the very same hazards the design is trying to protect against. This can be true of the hardware we use in shield designs. An operational shield frequently employs the use of bolts and nuts to hold it together. Under the impact of gas pressures, and the resultant flexing and bulging of the shield materials, these bolts and nuts can tear loose and be propelled at very high velocities as lethal fragments. To guard against this, welded corners and joints are generally superior to those secured with bolts and nuts. In addition, do not design the size of the bolts on the basis of pure mechanical shocks and stresses. The pressures and loadings experienced during a detonation are much higher and of shorter duration than typical stresses experienced. Testing of the shield will prove out the hardware used and will point to design problems.

F-8.9. DOCUMENTATION AND MARKING OF SHIELDS.

F-8.9.1. Drawings. Operational shield designs need to be documented to show the specifics regarding shielding, such as critical dimensions, materials, fasteners (size, type, grade/quality and quantity), weld details, thicknesses, the quantity and type of energetic material used with the shield. This document brings everything together in one location for easy reference and provides a historical perspective.

F-8.9.2. Test Plan. A test plan shall be developed prior to a shield test to identify the goals and planned accomplishments. The plan should also clearly indicate the energetics to be tested and the standards to be followed. The location of overpressure sensors, thermal flux sensors, cameras, shielding, energetic charges, etc., all need to be identified and shown on the test plan. The responsible explosives safety office should review and approve the test plan prior to the test.

F-8.9.3. Shield Certification. Explosive certification of the shield shall be assigned in writing by the responsible explosives safety officer, only after all data and the final report have been reviewed.

F-8.9.4. Shield Marking. A shield approved for personnel protection shall be installed per the design drawing, or other support documentation, must be permanently marked to identify the drawing that documents its design, shall have the words "EXPLOSIVE CERTIFIED" marked on it and the explosive limits shall be posted on it. No deviation from the established limits is permitted without further testing and recertification.

F-8.10. EXAMPLES OF SHIELD TYPES. Based upon testing performed at the Naval Surface Warfare Center Indian Head Division (NSWC IHD), the three shields described in paragraph F-2 are explosive certified as shields described in paragraph F-8.4 and authorized for use with the explosive limits shown. Figures F-1 and F-2 provide details regarding mounting of the shields. Other examples which have been tested include NSWC IHD shield drawings NAVORDSTA 6719, 7690, 6688, and 84-Y-S-049. It is stressed again that these shield designs were designed to protect from specific hazards. Every specific application must be tested according to MIL-STD-398A. This is the only way to ensure personnel receive the required level of protection. Based upon testing performed in a bomb proof, the following three shields described in paragraph F-2 and presented in figures F-1 and F-2 have assigned explosive limits and mounting requirements. Other examples include NAVORDSTA drawings 6719, 7690, 6688, and 84-Y-S-049.

Table F-2. Description of Shields

Shield	W	H	T	M	D	Comments	Allowed NEW of PES
Bazil	20	24	0.5	PC	29	only base secured	1.5 g
Sandusky	33	34	0.5	PC	42	base secured and top secured	9.0 g
Lab Guard Model # D-15-29PC	15	29	0.125 & 0.25	PC PMMA	26	set on Table top and secured to laboratory lattice	1.3 g

where W = width (inches),
H = height (inches),
T = thickness (inches),
M = material of construction,
D = minimum distance (inches) from the charge to the head position of a sitting operator (in this case, distance around the side of a shield)

NEW of PES is the explosive limit for blast overpressure (including the 25% safety factor)

The Lab Guard model# D-15-29PC is a commercially available semi-circular PC shield with a PMMA liner and weighted base.

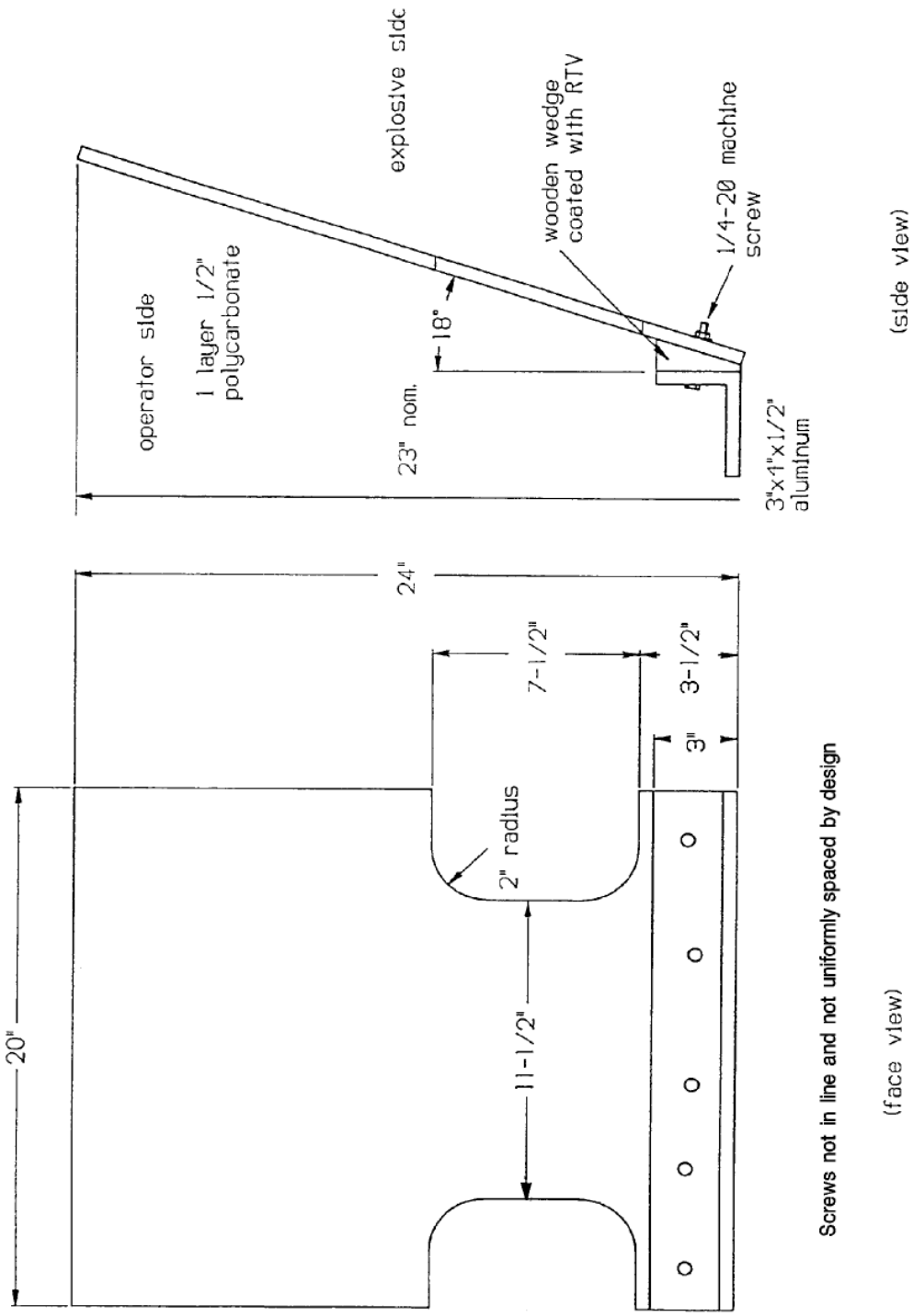

Figure F-1. Bazil Shield

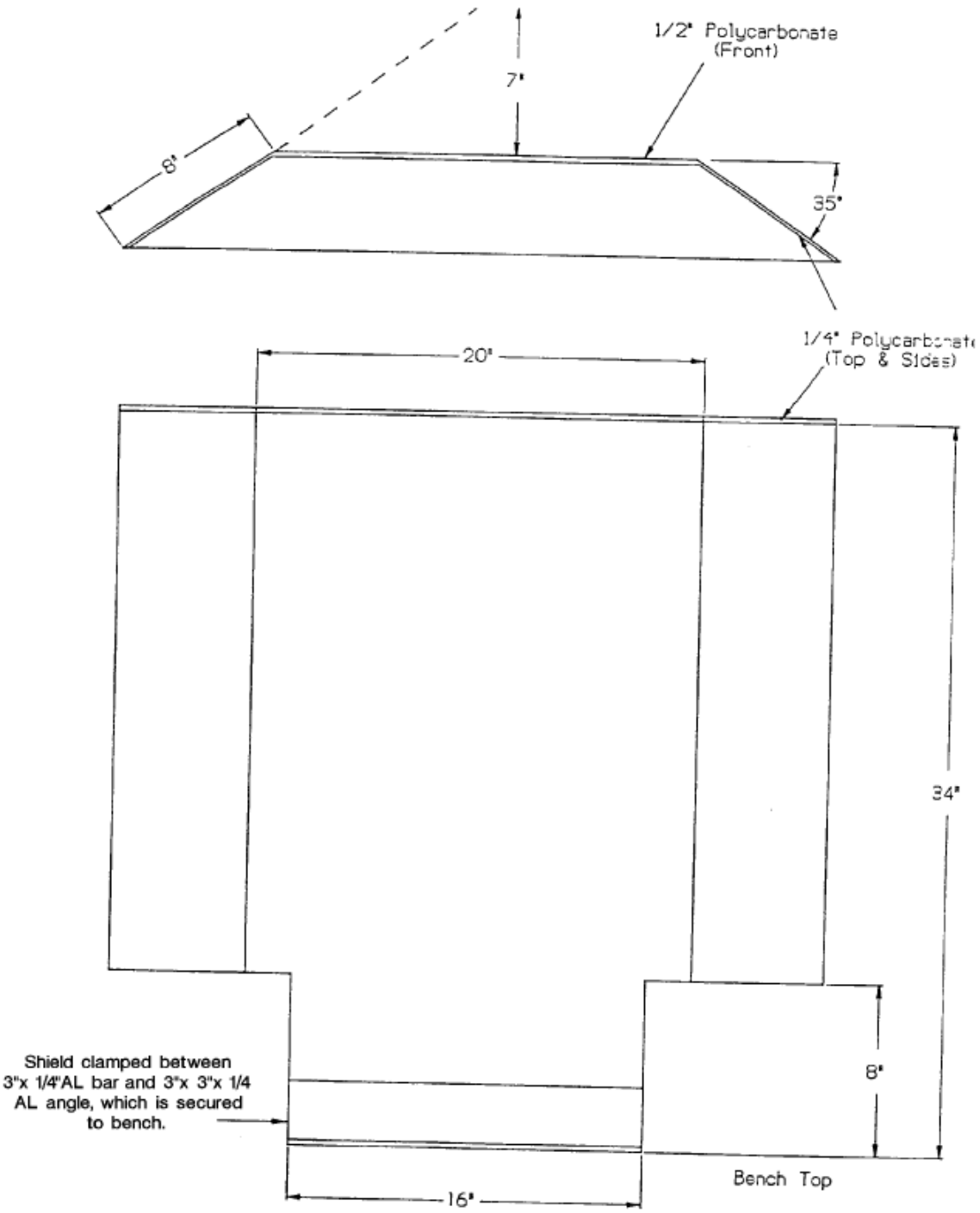

Figure F-2. Sandusky Shield

F-8.11. PROTECTIVE CONSTRUCTION DESIGN APPROVAL. Protective construction outside of the parameters of UFC 3-340-02 may include structures, chambers, fume hoods or boxes made of metal, concrete, shatter resistant glass/polycarbonate, or masonry designed to reduce ESQD requirements based on analysis or test data for the purpose of training, laboratory or field work with AA&E that may result in accidental explosion and demilitarizing operations and intentional detonation.

F-8.11.1. Validation. NOSSA must validate and endorse protective construction that will be used to satisfy DoW explosives safety requirements prior to submittal to DWESO for approval. The adequacy of a protective construction design may be demonstrated by testing or by analysis. The validation must include an independent technical review as addressed in a DWESO memorandum for minimum requirements to validate explosives safety of protective construction.

F-8.11.2. Required Information. The following information is required to describe how relevant criteria was applied to demonstrate the adequacy of protective construction to provide equivalent protection from blast overpressures, fragmentation, and thermal effects

a. Describe the purpose of construction (e.g., remote operation, attendant operation, intentional detonation

b. Type and requested NEW rating of AA&E.

c. Recommended number of repeat shots (if applicable)

d. Requested reduced ESQDs for safety of essential and nonessential personnel based on overpressure, fragmentation and thermal reflux.

e. Specific reference to test reports and other attachments that explain how explosives safety requirements are met (as applicable).

f. Complete details of construction including manufacturer, model, types of material used, connection and weld details, number and location of allowable utility penetrations, required venting system, viewports, doors, etc.

g. Site plans showing the location of approved chambers/vessel/hoods, operating personnel and remote operations.

h. For constructions that will be used for repeat detonations, multiple tests are necessary with charged weights equal to the requested rated NEW in order to measure accumulation of damage and plastic strains. If fewer test are planned than the number of recommended repeat shots requested for approval, a fatigue analysis based on measured strains and methodologies specified in International Code, 2007 ASME Boiler and pressure Vessels, 2007 is required.

i. For bombproofs and detonation chamber, where unlimited detonations will occur a fatigue analysis plan must be submitted for approval to NOSSA with the associated test data from paragraph m below.

j. Sufficient data to validate analytical models or software over the full range of their application.

k. Operating and maintenance manuals that describe details of construction with pictures and diagrams, operating procedures, maintenance requirements, inspection procedures before and after each detonation.

l. For construction that are not stand alone and are integrated in a production line, diagrams and charts should show how the construction of interest interacts with various components in the production line and what safety measures are taken at interfaces to protect personnel and equipment from pressure leakage or fragmentation.

m. Test reports must include:

(1) The weight and types of charges used to test the chamber.

(2) How equivalency was handled to include safety factors as required in MIL-STD-398

(3) How and where the charge was mounted

(4) Minimum standoffs between the charge, shields, and any pressure reflecting surfaces such as room walls, floor, and work benchtop surfaces.

(5) Step by step description of operation with process diagrams.

(6) NEW used in test. At least one test should use NEW charge that is 25% greater than requested NEW as required in MIL-STD-398. For construction that will be used for repeat detonations, see F-8.11.2.g.

(7) Pressure vs. time graphs for all gauges to show the magnitude of leakage pressure to be used for calculation of safety distances.

(8) Impulse calculations for all gauges.

(9) High speed and real time video.

(10) Stain mark measurements.

(11) Tabulation of measured peak pressure, impulses and strains.

(12) Temperature measurement and calculation of thermal flux.

F-9. ENERGETIC MATERIALS HAZARD CLASSIFICATION.

In accordance with NAVSEAINST 8020.8 (series), storage of energetic materials with locally assigned stock numbers (nonstock inventory) requires locally assigned hazard classifications in accordance with local procedures. Such items must not be transported over public transportation routes until interim hazard classification is obtained from NOSSA. See also paragraph F-14.2.3a.

F-9.1. An interim hazard classification does not need to be assigned per NAVSEAINST 8020.8 (series) for energetic materials being transported aboard government property.

F-9.2. The local responsible Explosives Safety Officer must approve how experimental energetic materials, for which no interim hazard classification exists, are transported on DoW owned property.

F-9.3. Commands manufacturing hazardous material (excluding explosives and articles containing explosives) shall use 49 CFR to classify the materials appropriately, class 2-9 for local transportation and transportation over public traffic routes.

F-10. SPECIFIC EXCEPTIONS FROM NAVSEA OP 5.

The following paragraphs provide clarification of requirements provided elsewhere in this manual, with respect to RDT&E operations. The application of any variations from the generalized criteria of this manual is only authorized at RDT&E activities operating under the scope of paragraph F-2. Selective use of individual paragraphs for any other application must be authorized by NOSSA.

F-10.1. FLAME PRODUCING DEVICES. Paragraph 2-4.9.5 makes no provision for flame producing devices in operational areas. However, flame producing devices used in a test are permissible in operational areas as identified in approved SOPs or permitted in writing by the local safety office.

F-10.2. STORAGE OF ENERGETIC MATERIALS. Paragraphs 4-1.7.5 and 11-6.3 provide direction concerning the removal of energetic materials from operating buildings at the end of a workday. Authorization for variation from these requirements can be obtained from NOSSA when the facility or operating procedures mitigate potential hazards or when overnight storage is demonstrated as being essential to mission accomplishment.

F-10.3. STORAGE OF WASTE

F-10.3.1. Laboratory samples authorized for final disposition and treatment are explosive hazardous waste (EHW) and shall be disposed of as soon as possible in accordance with OPNAVINST 5090.1 (series). These EHW laboratory samples shall be stored separately from non-waste materials. EHW laboratory samples shall be stored separately from non-waste materials. EHW laboratory samples require locally assigned or interim hazard classifications in accordance with locally approved standard operating procedures implementing paragraph F-9 of this manual. If laboratory samples authorized for final disposition and treatment are to be stored with other hazardous wastes, compatibility requirements of table 2-6 in NAVSEA SW020-AC-SAF-010 shall be observed unless authorized by NOSSA.

F-10.3.2. Non-explosively contaminated flammable solvents or materials contaminated with such solvents are by definition a hazardous waste exhibiting the characteristic of flammability. Solvents may also exhibit the characteristic of toxicity, or they may be listed hazardous waste. Guidance for storage by hazardous waste generators is given in OPNAVINST 5090.1 (series).

a. Many non-explosive chemicals and materials contaminated with such chemicals are by definition a hazardous waste.

b. Non-contaminated materials which are not hazardous waste can be disposed of as regular solid waste trash.

c. Explosive hazardous waste and combustible hazardous waste must not be stored in the same location.

F-10.3.3. Overnight storage of explosive waste in operating buildings for a specific time period must be approved by the responsible explosives safety and environmental in writing. A list that records the movement of explosive waste to or from operating buildings is required. Overnight storage of specific combustible materials (such as solvents, waste solvent, explosive contaminated solvents,

explosive/solvent/oil contaminated rags, etc.) must be performed in accordance with written Command directives.

F-10.3.4. If storage of explosive hazardous waste is operational necessary, a limit to the quantity and storage duration of explosive or combustible waste materials stored overnight in each operating building must be established by the responsible explosives safety officer and environmental offices. Unless specifically exempted in writing by the responsible ESO and based upon the final risk assessment codes of hazard analysis, the maximum limit for the storage duration of explosive or combustible waste in an operating building must not exceed one week.

F-10.4. SPRINKLER SYSTEMS. Operational buildings at RDT&E facilities frequently contain expensive electronic and test equipment. Paragraph 4-3.9 requires pre-reaction sprinkler systems in these areas, except in special cases when the commander of the RDT&E activity has determined that an automatic sprinkler system is either not required or that jeopardy to the building contents imposed by the presence of an automatic sprinkler system far exceeds or overshadows the hazards of unattended explosives. Therefore, it is incumbent upon the peer review team, which must include a fire protection engineer from the authority having jurisdiction, to perform a hazard analysis to determine if fire protection coverage is needed. Facilities and test bays, such as bombproofs, in which test and evaluation operations take place that involve the intentional ignition or initiation of energetic or ordnance materials are excluded from the requirement for automatic sprinkler systems.

F-10.4.1. Sprinkler System Tests. Water can adversely react with some components of experimental energetic formulations, destroy some developmental process control electronics, and promote rust or oxidation damage of unpainted, worn, or exposed steel processing equipment parts. Therefore, the responsible explosives safety officer may exempt specific RDT&E operating buildings from the annual wet test requirement. This exemption must be in writing, and specifically identify which buildings are exempted from annual wet testing. Periodic dry trip testing will replace wet testing for those buildings or facilities which are exempted from wet testing.

F-10.5. PLACARDS. RDT&E operations may involve the simultaneous transport or use of different types of compatible energetic materials. Whenever different types of compatible energetic materials are transported simultaneously aboard a truck, the placard indicating the greatest fire hazard shall be displayed. Whenever different types of compatible energetic materials are being used or stored simultaneously in an operating building or approved storage location, the placard indicating the greatest fire hazard shall be displayed. Whenever one type of energetic material is being transported, used, or stored, the correct fire hazard placard must be displayed.

F-10.6. ELECTRICAL REQUIREMENTS.

F-10.6.1. Sophisticated equipment at RDT&E facilities required for analysis, synthesis, formulation and processing of energetic materials is often not available in the proper explosion proof rating required by the National Electric Code NFPA Pamphlet No.70. In such cases, the management, the responsible explosives safety officer, and the Commander of the RDT&E activity will coordinate and document appropriate policy.

F-10.7. STATIC GROUNDS. Paragraph 5-5.3 discusses the usefulness of static grounds and discusses requirements. Paragraph 5-3.4 provides direction concerning materials sensitive to static spark discharge. However, not all energetic materials are sensitive to ESD. The responsible explosives safety officer will determine appropriate policy based upon:

a. Type of energetic material (primary, booster, pyrotechnic, etc.),

b. Configuration of energetic material (airborne dust, bulk, etc.), and

c. Small-scale sensitivity test data for ESD per AOP-7.

F-10.7.1. During the use of some types of electronic or digital equipment, electrical fields can be established which cannot be completely dissipated by static grounds. Static grounds are not designed to control those voltages which should be controlled by proper grounding of the electric field producing device. In such cases, the responsible explosive safety officer will determine appropriate policy based upon:

a. Magnitude of the field being generated, and

b. ESD sensitivity and type of energetic material being exposed.

F-10.7.2. Moving fluids can possess a streaming potential and therefore can carry an electrical charge which may not be dissipated by static grounds. In such cases, the responsible explosives safety officer will determine appropriate policy based upon:

a. Magnitude of electrical charge being carried, and

b. ESD sensitivity and type of energetic material being exposed.

F-10.7.3. Although moving fluids can generate and transport electric charge, laboratory glassware is an insulator and cannot be grounded to dissipate that charge. Therefore, metallic test stands or lattice structures fixed to laboratory glassware do not need to be grounded.

F-10.8. ORDNANCE GROUNDS. Paragraph 5-5.4 discusses the requirements for ordnance grounds and discusses requirements. The following clarifications apply to RDT&E facilities. Ordnance grounds are required for weapon system component assembly and disassembly only. Where it is not practical to establish ordnance grounds for minor weapons component assemblies at outdoor test sites, the grounding method shall be specified in the SOP.

F-10.9. SURGE SUPPRESSION. Paragraph 6-7 states that surge suppression is required on all power, communication, and process control conductors entering or exiting a structure housing explosives. T&E facilities that require large numbers of data, communication and control lines that support transient or temporary operations may conduct a qualitative hazard analysis compliant with 29 CFR 1910.119, OPNAVINST 3500.39 and/or MIL-STD-882, (as applicable to the RDT&E activity's mission). If it is determined that the benefits of surge protection for these types of lines is not commensurate with the cost, the commanding officer or authorized representative, may approve operation of that facility without surge protection. The SOP for any operation at the facility must include electrical storm shutdown criteria that is relevant for that particular operation.

F-10.10. QUANTITY-DISTANCE (Q-D) GUIDELINES. The tables in chapter 7 allow a minimum inhabited building distance of 236 feet for quantities of 0.5 pounds NEW or less of Class/Division 1.1 energetic materials when primary fragments do not exceed that distance. Reduced distances as provided in paragraph F-10.10.2 can be applied to explosives quantities less than 0.5 pounds NEW where a Preliminary Hazards Analysis, performed in accordance with paragraph 7-7.3. demonstrates no other hazards such as firebrand or fragments will exceed these distances. An explosives safety site approval must be obtained for all facilities or operations in accordance with chapter 8. The site approvals will authorize a specific explosives limit by hazard class/division of material, based on the hazard involved (for example, remote operation, intentional detonation, attended operation). Emerging

requirements for operational changes need not be resubmitted for site approval, provided the proposed operations do not exceed the existing explosives limit or the level of hazard to personnel and nearby facilities. Changes in use or mission of an explosives facility will be reviewed by the responsible explosives safety office to ensure the site approval parameters have not been exceeded, and updates must be reflected in applicable SOPs as per paragraph 8-1.2.1.c(2).

F-10.10.1. Intentional Initiation of Energetic Material. The protection measures provided in paragraph 7-7.4.1 must be used to provide K24 protection to personnel. Where the test operation results in the intentional and often repeated initiation of energetic material, more stringent criteria is required.

a. Non-Essential Personnel. The minimum separation distances between a site for intentional initiations or detonations is provided in paragraph 13-1.8.1. The required distances, based on a K328 level of protection are designed to provide complete safety to non-essential personnel in facilities unrelated to the test site (such as housing, administration, station boundary).

b. Essential Personnel. Personnel exposed to the hazards produced by intentional initiation of energetic material must be afforded protection capable of limiting incident blast overpressure to 1.2 psi, thermal fluxes to exposed skin of 0.05 calories per square centimeter, and exposure to all fragments except for incidental dust.

F-10.10.2. Minimum Q-D Requirements for Small Amounts of Energetic Material Having 1.1 Hazard Classification. This manual requires that inhabited building distance of 236 feet be observed as a minimum distance requirement for NEW 0.5 pounds or less. This distance is the larger of two distances, one based upon air blast and the other based upon debris thrown. For many laboratory situations, however, it can be demonstrated that adequate personnel protection is provided at distances significantly less than 236 feet. Material of unknown hazard classification must be assumed to be HC/D 1.1 material until testing confirms otherwise.

F-10.10.3. Criteria for Research and Laboratory Quantities of Explosives The following criteria has been developed based on the “Small Quantities for Research and Laboratories” (SQRL) test program. All operations sited under this paragraph must involve only non-fragmenting explosives.

F-10.10.3.1. Application. Use of these criteria within a facility requires an assessment to determine the NEWQD for each room within the facility.

F-10.10.3.2. Containers. Explosives containers may not contribute a fragment hazard outside of the room. Cardboard containers as well as thin plastic or glass laboratory containers (e.g., beakers, test tubes, petri dishes, and flasks) may be used. Thicker glass or plastic containers, such as heavy-duty storage containers, as well as metallic containers must be analyzed to ensure they do not present a fragment hazard outside the room.

F-10.10.3.3. Explosives Processing Equipment. During a detonation, equipment must not generate fragmentation/debris that is capable of perforating the walls of the room. Equipment that would provide confinement or is in intimate contact with the explosive material is of specific concern.

F-10.10.3.4. Construction Requirements. When a room meets the following minimum construction and interior volume requirements, and a minimum standoff distance of 12 inches (30 centimeters) is provided from all walls, the inhabited building distance (IBD), public traffic route distance (PTRD), intraline distance (ILD), and intermagazine distance (IMD) for explosive reactions of NEWs less than or equal to the maximum specified NEW is 0 ft (0 m) outside of the room. Personnel outside the room are

provided a high degree of protection from death or serious injury; however, building debris may still cause some injuries (see paragraph 7-3.7). No protection is provided to the personnel inside the room.

a. Minimum Vent Area – minimum uncovered vent area (e.g., ventilation ducts) must be greater than 1ft^2 (0.09 m^2) and must not provide direct line of sight between container or equipment debris/fragments and adjacent rooms or hallways.

b. Minimum Construction – ½ inch (12.7 mm) sheetrock on both sides, 4 inch nominal (100 mm nominal) deep studs, 16 inch (410 mm) on center. Minimum room volume must be greater than 960 ft^3 (27.2 m^3). Maximum NEW = 0.055 lb (25 g).

c. Minimum Construction – 5/8 inch (15.9 mm) sheetrock on both sides, 6 inch nominal (150 mm nominal) deep studs, 16 inches (410 mm) on center. Minimum room volume must be greater than 3600 ft^3 (102 m^3). Maximum NEW = 0.099 lb (45 g).

F-10.10.3.5. Zero ESQD. IMD to rooms sited per the above paragraphs is 0 ft (0 m).

F-10.10.3.6. Exceptions. Rooms not meeting these conditions, i.e., minimum construction, minimum volume, minimum vent area, maximum NEW) require siting per chapter 7 unless proven otherwise by testing or analysis.

F-10.10.3.7. Laboratories within Larger Buildings. If the laboratory is not a stand-alone facility, but resides within a facility that has multiple functions and personnel, then include a floor plan of the building to include a zoom-in of the room where the explosives are being handled or stored.

F-10.10.3.8. Doors. Doors to the laboratory(ies) must be closed and latched while explosives are present, and signage must be posted to prevent access by unauthorized personnel. Access to laboratories must be restricted to authorized personnel only. NFPA 101 must not be violated.

F-10.11. TNT EQUIVALENCY OF ENERGETIC MATERIALS. The TNT equivalency of energetic materials being developed at RDT&E facilities is often not known. Therefore, the actual weight of energetic materials may be used in determining NEW for any device containing energetic material or PES at RDT&E facilities for these situations.

F-10.12. LOCATION OF HYDRAULIC PUMPS AND VACUUM PUMPS. In RDT&E facilities, non-hazardous area rated hydraulic pumps and vacuum pumps may be located in separate utility rooms that may be part of the explosives processing building, but not in the explosives processing bay. Hydraulic pumps and vacuum pumps that are an integral part of explosives processing equipment may be located in the explosives processing room or bay provided that the pumps are rated for service in the hazardous area in accordance with the NEC and must be evaluated by a hazards analysis.

F-10.13. STORAGE GUIDELINES. The following deviations from chapter 11 are applicable to RDT&E activities.

F-10.13.1. Storage of Small Quantities of Explosives. Paragraph 11-2.2.c addresses mixed storage. The compatibility group of experimental energetic materials under development may not be known. Early in the development cycle of new energetic materials, very small quantities of energetic materials are produced for evaluation. Also, many variations of an energetic material may be undergoing evaluation at the same time. The requirement for segregated storage of these small quantity samples may be met by placing them in individual containers in various configurations. Storage configurations for up to 25 grams of energetic material per container are allowed provided the total magazine limit

does not exceed 1,000 pounds NEW. Each container shall be capable of fully containing any possible reaction of the contents. Each container design or type must be approved by NOSSA. Storage configurations and duration of storage in these configurations will be approved by management and the responsible explosives safety office, however, the inventory in such a magazine will be reviewed and justified on an annual basis.

F-10.13.2. Overnight Storage. The retention of ammunition and explosives in operating buildings overnight is authorized in accordance with paragraph 11-6.3. Ammunition may be held in these buildings past the 108 hour restriction imposed by paragraph 11-6.3.e when the material is being evaluated or tested as part of a RDT&E application or when the individual storage room or container has been site approved for extended storage.

F-10.14. STORAGE OF COMPATIBLE ENERGETIC MATERIALS. The prohibition on storing dry explosives from wet explosives imposed by paragraph 11-8.1.2.b may be compromised when necessary to meet RDT&E operations provided adequate storage is not available and the magazine does not exceed 1,000 pounds NEW.

F-10.15. STORAGE OF NITROCELLULOSE (NC). Paragraph 11-8.2.1.e addresses storage and the monitoring of NC. NC must be stored wet in water or solvent to maintain a 15 to 30% moisture content. The stability of each NC lot in storage must be verified annually. Authorization to deviate from these moisture requirements can be given by the responsible explosives safety officer provided a revised test program is implemented and a hazard analysis is conducted to identify the necessary controls to be taken to ensure that the material does not present an increased risk.

F-10.16. DISPOSAL OF AMMUNITION AND EXPLOSIVES. Paragraph 13-1.2 addresses authorization for disposal of energetic materials. Specific authorization from NOSSA is not required for routine disposal of energetic material at an approved disposal site. Each RDT&E activity has authority to dispose of energetic materials in accordance with public law, existing practices, and an approved SOP. EOD review of routine disposal SOPs is not required.

F-10.17. HANDLING. Approved handling equipment is described in NAVSEA OP 2173 and NAVSEA SW023-AH-WHM-010 and shall be used when standard items are being handled. When energetic materials or products containing energetic materials are being handled or tested and the approved handling equipment listed in NAVSEA OP 2173 or SW023-AH-WHM-010 is not suitable, the RDT&E line management and local safety office shall develop and approve the necessary fixtures. Equipment and fixtures include both powered and non-powered lifting and handling equipment and restraint fixtures. Approval and control of the equipment and fixtures is subject to the requirements of paragraph 10-3.3.1.

F-11. ADDITIONAL GENERAL REGULATIONS FOR RDT&E OPERATIONS.

This section provides general regulations for RDT&E operations which are not addressed by this manual but pertain to laboratories, pilot plants, and T&E processes.

F-11.1. IDENTIFICATION AND INVENTORY OF RDT&E MATERIAL, PRODUCTS, AND DEVICES. All RDT&E ordnance, products and devices need precise labeling information. Inventory held at RDT&E activities consists primarily of non-cataloged material, which is not subject to the labeling/sentencing requirements outlined in NAVSUP P-805 or MIL-STD-129. Unless otherwise directed by the technical data package, the following information must be supplied:

a. Identification of the energetic material product or device,

b. The weight of energetic material,

c. Date and place item was loaded,

d. Locally Assigned Stock Number (LSN), serial number or unique identifier, quantity and unit of issue

F-11.2. ATTENDANT LOW SPEED CUTTING AND HAND TRIMMING OF ENERGETIC MATERIALS. Energetic materials of Hazard Class/Division 1.1, 1.3, or 1.4 may be hand trimmed or cut with sharp tools to prepare samples for testing. The following criteria must be followed:

a. For new formulations that are not well characterized (as defined by paragraph F-12.2.2.a):

(13) The extract sample must be less than the limit of an approved operational shield for attendant operation and a bare energetic sample. Limits for completely unknown and high-risk materials such as primary explosives should be small as possible and based on a hazard analysis or available sensitivity data;

(14) The operator and equipment must be grounded;

(15) All cutting shall be conducted behind a certified blast shield approved for attendant operations in accordance with paragraph F-8.4;

(16) All cutting will be done on a non-sparking surface.

b. For characterized formulations (as defined by paragraph F-12.2.2.a): For an energetic material to be considered safe for contact, its impact, friction and ESD sensitivity must be equal to or better than (less sensitive than) that of PETN. Further,

(1) Hand cutting and trimming of characterized energetics includes cutting with a bare knife, guillotine cutting, cleaving of an energetic crystal, plug cutting/ cork boring from slabs of energetic material, trimming energetic material to be flush with the end of a tube, and similar operations.

(17) Cutting operations will be documented in accordance with paragraph 9-4.5.6 and the local peer review process. The hazards analysis must address sensitivity of the material and friction heat generated by the cutting method.

(18) Weight of the sample being cut must be as practical. Cutting must be done behind an operational shield in accordance with paragraph F-8.

(19) Hardness of an energetic material increases the frictional force applied to the material when cutting. Generally, HC/D 1.1 materials should be less than or equal to 70 Shore A hardness, and HC/D 1.3 materials should be less than or equal to 90 Shore A- hardness to be cut safely. While cutting should generally be done at ambient temperature, some material may need to be heated to make cutting easier or to reduce Shore-A hardness to safe levels. Hand cutting of samples must be documented with an HA (heating of samples to make them softer), addressed by operating procedures and approved by management and safety.

(20) The physical integrity of the energetic material must be checked prior to any cutting. Do not conduct cutting operation if the material does not have good physical integrity properties (for

example, it is brittle or crumbles or slumps). The peer review process will document the procedures to be taken when the physical integrity of propellants are questionable.

(21) The samples must be examined visually, prior to cutting, for abnormalities such as unexpected color changes, exudates, foreign material, uncured areas, and crystal growth on the outside of the sample. If the SOP/SD does not address protocol for these situations, procedures must be developed and approved through management and safety before proceeding with attendant cutting operation. It may be necessary to acquire new small-scale safety data if the material properties have changed.

(22) Some energetic formulations contain energetic plasticizers. These plasticizers can seep out of the formulation. The SOP/SD must address proper handling of these materials if necessary

(23) Some propellant formulations are known to present a unique cutting hazard due to increased sensitivity to initiation by friction/impact. Current documented examples of this are propellants containing catocene or ferrocene. Activities shall ensure that:

(a) Extreme care is exercised in developing and characterizing new/existing formulations containing ferrocene, catocene or similar compounds.

(b) All formulations containing ferrocene are prohibited from cutting by attendant operation, under any circumstances.

(c) All formulations containing 2% or more by weight of catocene are prohibited from cutting by attendant operation, under any circumstances.

(d) Attendant cutting operations on formulations containing less than 2% by weight of catocene are conducted behind an explosives-certified shield meeting the requirements of paragraph F-8.

(24) Knives and other cutting tools must be clean and sharp, without nicks or burrs.

(25) Do not use a push-and-pull sawing motion when cutting energetic materials. Cut the material in a single stroke if possible, or in multiple strokes in a single direction, gently pushing downward through the material. Thicker samples, or when end-facing a sample in a tube, may be cut part of the way through, then rotated for additional cuts, with a final cut through the center.

(26) Drill explosives by slowly rotating the drill/mill bit against the material. Use even pressure to rotate at an approximate rate of one revolution every 3 seconds. Stop every 2-3 revolutions to clean the drill and drill hole

F-12. LABORATORY REGULATIONS.

A laboratory operation, as defined in this document, is any operation that conducts basic or applied research, research and development (R&D), test and evaluation (T&E), or quality assurance (QA) on energetic materials and devices containing energetic materials. Energetic materials include propellants, explosives, pyrotechnics and other materials which can generate explosive hazards. The direction in this chapter also applies to those laboratory activities or operations found in paragraph F-3 that do not produce components that are part of fleet-issued items and that have one or more of the characteristics listed below:

a. A laboratory performs energetic materials research using many scientific and technical disciplines such as chemistry, physics, engineering and materials science.

b. A laboratory operation may also conduct RDT&E at off-site activities or field operations.

c. A laboratory operation often uses non-explosive reagents and precursors that are not commercially available and need to be prepared for use in the synthesis of new energetic materials. The synthesis of new energetic molecules is carried out to provide candidate materials for explosive/propellant applications and for the purpose of broadening basic understanding of energetic materials science through the development of structure/property relationships.

d. A laboratory energetic materials operation involves the use (or presence) of an energetic material (sub-gram to multi-kilogram weight range). Examples of energetic material operations which might be conducted under the scope of this document include: (1) chemical synthesis, (2) preparation of formulations, (3) chemical analysis, (4) chemical and/or physical characterization, (5) laboratory testing, (6) firing chamber (bombproof) testing, and (7) field testing. Processes are developed for loading the energetic material into ordnance items and devices, which are tested and evaluated for their hazard, performance or functional properties. When laboratories engage in test and evaluation operations on or off site, they must follow the guidelines defined in paragraph F-14 for T&E operations.

e. A laboratory performs scale-up of material from basic research necessary to transition concepts and/or products into pilot plant operations. When laboratories engage in the scale-up of energetic materials, they must follow the guidelines defined in paragraph F-14 for pilot plant operations.

Table F-3. Principle Characteristics that Differentiate Laboratory Operations from Pilot Plant Operations

LABORATORIES	PILOT PLANTS
Operations may change daily. Operations are often for the first time and are innovative and unique. Literature, technical reports and products support the RDT&E community within DoW, NASA, DOE, NATO and other approved organizations.	Operations vary and change frequently. Operations are evolutionary and not interactive in nature. Products support the RDT&E community within DoW, NASA, DOE, NATO, or other approved organizations.
The quantity of product is often sub-gram to multi-kilogram weight range and is often not defined by a sponsor.	The quantity of product produced is less than or equal to the limited rate initial production (LRIP) quantity as defined by the procuring activity.
Perform basic experimental work on new energetic molecules and their mixtures which have not yet been accomplished for an energetic material in any configuration.	Perform developmental work on a scale which has not yet been accomplished for a specific energetic material in a specific configuration.
Perform research and characterization on experimental, qualified, and Final (Type) Qualified energetic materials and constituents of energetic materials.	Perform work on experimental, qualified, and Final (Type) Qualified energetic materials.

Perform the basic research and exploratory development of new energetic materials and processes. Provide literature, technical reports and personnel for support and transitions to pilot plants.	Perform the process development to document and validate technical data packages for specific Navy applications.
Perform laboratory QA procedures.	

F-12.1. SYNTHESIS OF ENERGETIC MATERIALS. This section describes the general safety procedures for conducting research and development (R&D) in laboratories which includes the synthesis and characterization of energetic molecules and materials.

F-12.1.1. Responsibility. All operations are the direct responsibility of the principal investigator and/or manager supervising the work. Line management is responsible for the enforcement of all safety procedures and for the indoctrination of new personnel. All personnel involved in the operation must follow the written instructions defined by the SOP and supplemental documentation. If personnel have any questions about the safety of any step of an experiment, it is their responsibility to consult with the principal investigator and/or management before initiating work.

F-12.1.2. Unattended Operations. Unattended operations are permitted, provided they are performed in a facility site approved for a comparable hazard and performed under an approved SOP.

a. Precautions must be taken against hazards arising from unplanned interruptions in utility services such as electricity, water and inert gas. Wherever possible, arrangements for routine inspection of the operation should be made and, in all cases, the laboratory lights should be left on and an appropriate sign should be placed on the door.

b. A hazard frequently encountered is the failure of cooling water supplies. A variety of devices can be used that (1) automatically regulate water pressure to avoid surges that might rupture the water lines and (2) monitor the water flow so that its failure can automatically turn off electrical connections and water supply valves.

F-12.1.3. Synthesis Scale-Up of New Energetic Materials. Scaling-up is usually the procedure of incrementally increasing the quantity of specific energetic material being synthesized in specific types of devices of larger and larger capacity. Processing variables are examined during the scale-up exercise, and often the specific synthesis procedures need to be modified in order to maintain or achieve the desired yield and product quality. A scale-up plan must be generated and approved in accordance with local policies or procedures.

F-12.2. FORMULATION OF ENERGETIC MATERIALS. This section pertains to RDT&E energetic materials formulation development. The following safety precautions apply to formulations being made in batch sizes of 50 grams or less. For the purpose of this text, the word "formulation" will refer to the intended combination of components invented by the developer of an energetic material. The word "composition" will refer to the actual combination of components of an energetic material processed during an operation.

F-12.2.1. Responsibility. The local safety manual or equivalent local instruction must specifically assign responsibilities for managers and energetic material developers.

F-12.2.2. Minimal Safety Data Requirements for Development of Energetic Material. In order to characterize energetic materials being developed, certain tests should be conducted by methods described in AOP-7 (Manual of data requirements and test for the qualification of explosive material for military use), approved SOPs or other approved supplemental documentation.

a. Formulation Development. The following data shall be obtained for energetic ingredients, metals, inert components, and combinations.

(27) For an energetic ingredient, the following test data are required:

(a) Non-isothermal Differential Scanning Calorimetry (DSC), or Differential Thermal Analysis (DTA), to obtain a measure of thermal stability,

(b) Drop weight impact sensitivity (along with a reference material),

(c) Friction sensitivity (along with a reference material), and

(d) Electrostatic discharge (ESD) sensitivity (along with a reference material).

(28) For a metal, the following test data are required along with a reference material:

(a) Friction sensitivity (if applicable), and

(b) ESD sensitivity.

(29) For an inert ingredient, thermal stability (DSC or DTA) test data is required, and ESD when appropriate.

(30) The reactivity of the new ingredient with the other ingredients in the proposed formulation must be determined by vacuum thermal stability (VTS) or DSC, thermogravimetric analysis (TGA) or similar test to measure inter-reactions at a small scale. The peer review process and hazard analysis will determine when reactivity is unacceptable and of further testing is required. Interreactivity of ingredients may warrant additional testing prior to proceeding with further work on such materials. Examples of additional thermal stability data that may be obtained are Thermogravimetric Analysis (TGA), 48-hour isothermal DTA, 2-gram DTA, Accelerating Rate Calorimetry (ARC), HFC, the Methyl Violet test, the Taliani test, heat flow calorimetry (HFC), analogues to these techniques as developed or others described in MIL-STD-286 (series), or chromatographic methods. The peer reviews will define instability.

f. Composition Development. Supplemental documentation must be submitted prior to the preparation of the initial mix (either a 10 gram or less hand-mix or a mechanical mix up to 50 grams) for a specific composition. The following tests will be performed on the initial mix of the composition as a minimum:

(1) Non-isothermal DSC or DTA,

(2) drop weight impact sensitivity (along with reference standard),

(3) Friction sensitivity (along with reference material),

(4) ESD (along with reference material), and

(5) Reactivity test, as prescribed in paragraph F-12.2.2.a.(30).

g. First Mechanical Mix. The developer must be present when the first mechanical mix of a new energetic composition is made in order to observe the mix and address questions or problems that may arise.

h. Laboratory Scale-Up of Energetic Materials. Laboratories often engage in the scale-up of energetic materials and compositions. The type of mixer used depends on the formulation being processed. For batch processing, peer review and line management approvals are required when scaling up to larger mixers or reactors. For continuous processes, a peer review and management approval is required when scaling product yield up by five times.

i. Minimal Safety Data Requirements. Before a formulation is transitioned to a pilot plant for scale-up, the following data shall be obtained:

(1) Non-isothermal sensitivity data (DSC or DTA) on the energetic material(s),

(2) Non-isothermal sensitivity data (DSC or DTA) on the composition to be scaled-up,

(3) Isothermal stability data (VTS, or DSC/DTA plus TGA, or Heat Flow Calorimetry (HFC), or Accelerated Rate Calorimetry (ARC)) on the exact formulation to be scaled-up,

(4) Impact sensitivity data (along with a reference material) on the exact formulation to be scaled-up,

(5) Friction sensitivity data (along with a reference material) on the exact formulation to be scaled-up, and

(6) ESD sensitivity data (along with a reference material) on the exact formulation to be scaled-up.

j. Safety Data Sheet (SDS). The formulating laboratory is responsible for the development of an SDS for the materials it invents (including new molecules and new compositions, etc.).

F-13. PILOT PLANT REGULATIONS.

A pilot plant is a facility designed to demonstrate industrial processing techniques which may be used by production plants for the large scale manufacture of similar materials. The characteristics which differentiate pilot plants from production plants are given in paragraph F-4. The direction provided in this chapter applies to those activities or operations that have the characteristics of a pilot plant as given in paragraph F-4, or meet one of the following definitions:

a. A pilot plant performs scale-up of laboratory processes necessary to transition concepts and/or products into full scale production.

b. A pilot plant maintains a high degree of flexibility in order to (a) develop intellectual property and reduce it to practice, (b) develop and demonstrate processing techniques, (c) produce live and dummy test units for the RDT&E community, and (d) provide a limited production capability.

c. A pilot plant is a processing demonstration activity for the development of energetic materials and the development of new processing techniques for the loading, assembly and packaging (LAP) of munitions, components or devices.

d. A pilot plant develops and validates the TDP necessary to produce production quantities of the desired product in the required configuration.

F-13.1. SCALE-UP OF ENERGETIC MATERIALS. Scaling-up is usually the procedure of incrementally increasing the quantity of a specific energetic material being processed in specific type of device of larger and larger capacity. Processing variables are examined during the scale-up exercise, and often the specific energetic material formulation and/or mixing parameters need to be modified in order to maintain or achieve desired product quality. A scale-up plan must be submitted to management, and its approval must be documented before the scale-up exercise begins.

F-13.1.1. Composition Development. The management has responsibility to approve work before it is performed. Therefore, any change to an energetic formulation must be approved by management before work proceeds. Any changes beyond the component tolerances originally approved for that formulation must be reviewed and approved again. Management must document its approval decisions when formulation changes occur during scale-up of energetic materials.

Table F-4. Principle Characteristics which Differentiate Pilot Plants from Production Plants

PILOT PLANTS	PRODUCTION PLANTS
Operations vary and change frequently. Operations are evolutionary and not iterative in nature. Products support the RDT&E community within DoW, NASA, DOE, NATO or other approved organizations.	Operations are repetitive in nature. The same products are produced over extended periods. Products support the fleet and other user components of DoW.
The quantity of product produced is less than or equal to the limited rate initial production (LRIP) quantity as defined by the procuring activity.	The quantity of product produced is equal to or greater than the limited rate initial production (LRIP) quantity as defined by the procuring activity.
Perform developmental work on a scale which has not yet been accomplished for a specific energetic material in a specific configuration.	Perform work which has been proven or approved by the Navy Weapon System Explosives Safety Review Board (WSESRB).
Perform work on experimental, qualified and Final (Type) Qualified energetic materials.	Perform work on Final (Type) Qualified energetic materials.
Perform the process development necessary to document and validate technical data packages for specific Navy applications.	Perform specific operations in accordance with a technical data package which is under configuration control.
Make changes to specific work requirements by peer review.	Make changes to specific work requirements by engineering change proposal (ECP), Waiver or Exemption approved by the procuring activity through a designated Configuration Control Board (CCB).

F-13.1.2. Energetic Material Handling. Since not all energetic materials are sensitive to unplanned energy stimuli, some differences in handling procedures are permissible. Specific material handling guidelines for all energetic materials which an activity handles must be recorded in the local safety manual. Specific requirements for material handling must be contained in the SOPs and completely covered in the companion HCB. Knowledge of the activity's energetic material handling policy shall be a required part of the pilot plant qualification/certification program.

F-13.1.3. Minimal Safety Data Requirements. The following data shall be obtained and reviewed from the formulating activity, or already on file at the pilot plant facility before any energetic material can be scaled-up in a pilot plant. The test methods corresponding to the data provided or obtained must be identified.

a. Non-isothermal sensitivity data (DSC or DTA) on the energetic material(s),

b. Non-isothermal sensitivity data (DSC or DTA) on the composition to be scaled-up,

c. ISO thermal stability data (VTS, DSC, DTA or TGA) on the exact formulation to be scaled-up,

d. Impact sensitivity data (along with a reference material) on the exact formulation to be scaled-up,

e. Friction sensitivity data (along with a reference material) on the exact formulation to be scaled-up,

f. ESD sensitivity data (along with a reference material) on the exact formulation to be scaled-up,

g. The PHL or HCB used by the formulating activity for processing operations,

h. A copy of a mix sheet or batch sheet used by the activity to process the composition, and

i. Copies of SDSs for all components of the formulation, and for the composition.

F-13.2. DEVELOPMENT OF NEW PROCESSING EQUIPMENT. Line management and the responsible local explosives safety office must define the requirements for new processing capability and develop preliminary technical design packages for new processing equipment.

F-13.2.1. Technical design packages for new processing equipment must be reviewed by the responsible explosives safety office before procurement.

F-13.2.2. Although it is not necessary for the PRC to review and approve technical design packages before procurement, management and the responsible explosive safety office has authority to request a PRC review prior to any procurement action.

F-13.2.3. Prove-out trials must be accomplished with inert materials which simulate the energetic materials to be processed. The purpose of these trials is to determine operating parameters, verify the PHL and HCB and to develop the SOP for live processing operations.

F-13.2.4. All management approval decisions pertinent to the operation of new processing equipment must be documented.

F-13.2.5. The PRC must review all data from processing operations and document its approval decision before any live energetic work is performed with new processing equipment.

F-13.3. PREVENTIVE MAINTENANCE (PM). Each organization performing pilot plant work shall prepare a PM plan that includes the PM requirements for all active process equipment and facilities. This plan shall include:

a. A method for verifying that PM is performed on schedule.

b. A criteria for when recertification is required as a result of inactivity or lack or PM.

c. Inspection schedules for filter media, scrubber fluids, and equipment surfaces contacting energetic materials if they are not covered by an SOP.

d. A schedule and means of documentation for checking metal-to-metal clearances of process equipment components that contact energetic materials.

F-13.4. ENERGETIC MATERIALS PROCESSING. Energetic materials processing must have a hazard analysis and be performed with approval process equipment and operating procedures.

a. Unless otherwise permitted by the responsible explosives safety office, screening of raw material components is required. Either a radiographic or a physical screening method may be used.

b. A two-man rule or safe person plan shall be documented and implemented for each operation.

c. Process variables that rely on pressure or temperature for control must have manual upper limit control mechanisms to prevent over pressurization or overheating.

F-13.4.1. Batch Mixing Processes. Unless permitted by the hazards analysis, batch mixing of all energetic materials must be performed by remote control per paragraph 9-4.3. The minimal requirements for monitoring remote batch mixing operations for energetic materials are:

a. Verification that mixer bowl is secure before agitation starts

b. Control and verification of mixer agitator speed or other inputs,

c. Control and verification of heat transfer fluid temperature (or steam pressure) in the mixer bowl jacket,

d. Verification of pressure or vacuum in the mixer bowl during use,

e. Visual verification of events from the control house/bunker is required (closed circuit television with audio signal, mirrors, etc.), and

f. Emergency stop.

F-13.4.2. Casting Operations. Casting energetic material products either with or without vacuum does not require remote control. All vacuum chambers, casting bells, or other devices required to hold pressure must be tested in accordance with the PM plan or appropriate SOP. Line management has authority to determine the requirements and the test methods. The test methods and results must be documented.

F-13.4.3. Screw Extrusion Operations. All screw extrusion operations with energetic materials must be conducted by remote control.

a. Minimal Requirements for Monitoring Screw Extrusion Operations. The minimal requirements for monitoring screw extrusion operations for energetic materials are:

(1) Verification of extruder screw RPM,

(2) Verification of motor torque,

(3) Control and verification of heat transfer fluid temperature in the barrel jacket,

(4) Verification of discharge pressure at the die,

(5) Control and verification of feeder performance,

(6) Closed Circuit Television (CCTV) camera in the bay and monitor in the control house/bunker for visual verification of events,

(7) Audio verification of events, and

(8) Emergency stop.

F-13.4.4. Injection Molding/Loading Operations. Injection molding is a process that uses a mold as a component of the machine equipment, whereas injection loading is a process that uses a mold as a component of the product being loaded. All injection molding or injection loading operations that impart work or energy to energetic materials must be conducted by remote control.

a. Minimal Requirements for Monitoring Injection Molding/Loading Operations. The minimal requirements for monitoring injection molding or injection loading operations for energetic materials are:

(1) Control and verification of energetic materials flow into the machine,

(9) Verification of power fluid pressure,

(10) Verification of cavity pressure,

(11) Verification of ram displacement, or screw rpm,

(12) Verification of temperature of energetic material in the machine,

(13) Control and verification of heat transfer fluid temperature in the machine,

(14) Verification of absolute pressure when vacuum system is in use,

(15) CCTV camera in the bay and monitor in the control house/bunker for visual verification of events,

(16) Audio verification of events, and

(17) Emergency stop.

F-13.4.5. Extrusion Pressing Operations. All extrusion pressing of energetic materials must be conducted by remote control.

a. Minimal Requirements for Monitoring Extrusion Pressing Operations. The minimal requirements for monitoring extrusion pressing operations for energetic materials are:

(1) Control and verification of die temperature,

(18) Verification of power fluid pressure, or ram force,

(19) Verification of ram speed,

(20) Verification of absolute pressure when vacuum system is used,

(21) Visual verification of events from the control house/bunker is required (closed circuit television with audio signal, mirrors, etc.), and

(22) Emergency stop.

F-13.4.6. Molding Powder Preparation. Making molding powder does not require remote control.

a. Minimal Requirements for Monitoring Molding Powder Preparation Operations. The minimal requirements for monitoring molding powder preparation operations for energetic materials are:

(1) Control and verification of agitator RPM,

(23) Verification of absolute pressure during vacuum or ventilation of the vessel,

(24) Verification of carrier fluid temperature,

(25) Closed system to remove liquid solvent and condense vapors, or venting compliant with local laws and deemed adequate by the local industrial hygienist, and

(26) Emergency stop.

F-13.4.7. Pressing Operations. Pressing of energetic materials is normally performed by shielded or remote operation based on the level of risk and quantity of energetic material involved. However, there are some RDT&E operations which must routinely be performed under manual control (such as detonator, leads, and small test samples for characterization). Local pressing operations are allowed provided an approved SOP exists which includes adequate shielding in accordance with paragraph F-8.

a. Minimal Requirements for Monitoring Pressing Operations. The minimal requirements for monitoring pressing operations for energetic materials are:

(3) Control and verification of die temperature when the die is heated,

(4) Verification of power fluid pressure, or ram force when remotely controlled,

(5) Verification of ram speed when remotely controlled,

(6) Verification of absolute pressure when vacuum system is used,

(7) Visual verification of events from the control house/bunker is required (closed circuit television with audio signal, mirrors, etc.) And

(8) Emergency stop.

F-13.4.8. Machining Operations. Machining operations must include a hazard analysis to asses the risks associated with the operation being performed. The hazards analysis should address the following operating parameters:

a. Verification and control of machine speed (linear and rotational speed of tool(s)),

b. Verification and control of energetic material feed rate,

c. Verification and control of depth of cut,

d. Visual verification of events from the control house/bunker is required (closed circuit television with audio signal, mirror, etc.),

e. Appropriate cooling fluids compressed air or inert gases used to prevent heat build-up, and

f. Emergency stop.

F-13.4.9. Energetic Chemical Processing Operations. Best management practices available must be used to define chemical synthesis mechanisms, estimate yields and flow rates, perform material and energy balances and identify process equipment for specific unit operations.

a. Process Equipment Selection. Line management has authority to select process equipment for specific unit operations. Line management must document chemical engineering data and calculations used to make decisions.

b. Minimal Requirements for Monitoring Energetic Chemical Processing Operations. The minimal requirements for monitoring unit operations for energetic chemicals are:

(1) Control and verification of raw material input flow rates for the most upstream unit operation of the process,

(27) Measurement and control of the heat fluid, or the actual reacting fluid, for all exothermic reactions,

(28) Verification of material input and output flow rates for all unit operations in which chemical reactions occur, and

(29) Measurement of temperatures and pressures for all unit operations in which chemical reactions occur.

F-13.4.10. Resonance Acoustic Mixing (RAM). Unless permitted by the hazards analysis and approved by the responsible local explosive safety office, resonance acoustic mixing of all energetic materials must be performed by remote control. The minimal requirements for monitoring remote resonance acoustic mixing operations for energetic materials are:

a. Verification that the mixing vessel is secure before the resonance acoustic mixer is started,

b. Monitor temperature inside mixing vessel, if possible

c. Monitor the either the frequency, acceleration or intensity (i.e., Power),

d. Visual verification of events from the control house/bunker is required and

e. Emergency stop

F-13.4.11. Additive Manufacturing, AM (3D printing). Unless permitted by the hazards analysis and approved by the responsible local explosive safety office, AM processes of all energetic materials must be performed by remote control when possible. Prior to beginning operations, a hazards assessment must be done to address any unique hazards and should include the following operational parameters:

a. Use of an operational shield with the appropriate rating during attended operations

b. Monitor print head location

c. Concurrent explosive operations

d. Visual verification of events from the control room is required, and

e. Emergency stop

F-14. TEST AND EVALUATION.

This paragraph provides mandatory and advisory safety requirements that are unique to T&E operations and facilities. This includes T&E operations ashore, at sea, and aloft. For the purposes of this appendix, a T&E operation is a planned non-destructive, destructive or potentially destructive test intended to characterize an energetic material or ordnance item as to its sensitivity to known hazards, its physical properties, or its performance properties. T&E operations take place at all phases of the munition life cycle from basic research to production manufacturing, as well as weapon stockpile surveillance.

F-14.1. PURPOSE. The purpose of this section is to provide direction concerning the safe use of energetic materials and ordnance items for Navy activities specifically involved with the T&E of these items. The direction provided in this chapter applies to T&E operations in three areas:

a. T&E operations ashore conducted at government owned facilities which are dedicated, temporary or multi-functional,

b. T&E operations at sea conducted aboard U.S. Navy ships or U.S. government owned research vessels, or Navy contracted commercial vessels, and

c. T&E operations aloft conducted aboard U.S. government aircraft.

F-14.2. APPROACH. T&E of energetic materials or items containing energetic materials is conducted in all phases of the development cycle and at many different sites. Each site has unique needs and testing requirements change frequently. Because of the nature of most R&D work, the employees involved in conducting the T&E efforts are typically the most skilled and knowledgeable people in these areas. These personnel are an invaluable source of knowledge and essential in development of SOPs and HAs. The intent here is to give reasonable local discretion to the Commander of the RDT&E facility

within the framework established in paragraph F-3 to use these skilled resources and maximize the safety of operations at that facility.

F-14.2.1. Discrepancies When Using Fleet Assets. The provisions of this chapter also apply to T&E operations conducted with fleet assets. Any discrepancies between approved RDT&E procedures and fleet procedures must be resolved by the Office in Charge before deployment.

F-14.2.2. Training. For workers at RDT&E activities where most T&E work is not routine and workers are required to perform tasks on a wide variety of operations and devices, the training procedures specified in OPNAVINST 8023.24 (series) may not be adequate. Because the tasks performed are constantly changing and the devices involved are frequently modified, these workers must be trained to expect the unexpected and to be able to competently and safely deal with it. The commander of the RDT&E activity must authorize the development of a training program specifically for training and qualifying T&E workers performing energetic operations. Paragraph C-1 provides additional training requirements. This may include on-the-job training with live ordnance under the close supervision of properly certified individuals. This program must be reviewed by the responsible explosives safety office and approved by the Commander of the RDT&E activity or the CB.

F-14.2.3. Compliance with Transportation and Storage Data. All T&E operations performed afloat must comply with NAVSEA SW020-AC-SAF-010 when using energetic materials which are Final (Type) Qualified in accordance with NAVSEAINST 8020.5 (series).

a. Local Hazard Classification. Commanders of RDT&E activities are authorized to issue local hazard classifications in accordance with local procedures for local storage and transportation on station of explosives or articles containing explosives not listed in Ordnance Information System (OIS) or NAVSEA SW020-AC-SAF-010. Local approvals must not be used for transportation off the station. Transportation on public highways requires interim or final hazard classifications obtained from NOSSA.

b. Performance Oriented Packaging (POP) Certification. POP certification is not required for RDT&E operations on-station involving energetic materials which have not been Final (Type) Qualified in accordance with NAVSEAINST 8020.5 (series). Transportation on public highways of all hazardous materials used in RDT&E operations must be certified per 49 CFR.

F-14.2.4. Use of Radar/Radio Equipment near Ordnance during T&E Operations.

a. For known ordnance HERO status: T&E operations involving an experimental energetic material, device or ordnance item which are considered to be HERO UNSAFE or HERO SUSCEPTIBLE (per NAVSEA OP 3565 Volume 2) may require electromagnetic radiating equipment (such as radar or radio transmitting equipment) to be silenced and/or limited. The facility's EMCON bill can be consulted for guidance on silencing or limiting emissions of the radiating equipment for HERO UNSAFE and HERO SUSCEPTIBLE Ordnance. The radiating equipment must be identified in the SOP and may be required to remain silenced or limited until all T&E operations in the area are completed.

k. For unknown ordnance HERO status: If the HERO status of an experimental energetic material, device or ordnance item is not known, it must be treated as HERO UNSAFE in accordance with the requirements of NAVSEA OP 3565 Volume 2. If it becomes necessary to use radio or radar transmitting equipment which will exceed the HERO UNSAFE environment of NAVSEA OP 3565 Volume 2, the devices or hardware containing them will be returned to their storage containers and returned to the magazine prior to energizing the radio/radar equipment.

F-14.2.5. Other Sources of HERO. Other sources of high intensity radio frequency (RF) fields such as ships and aircraft within 3000 yards of a T&E operations involving energetic materials will be queried as to the output and frequencies from radio and radar. Restrictive distances will be determined in accordance with NAVSEA OP 3565 Volume 2 and NAVSEA OP 4. These other sources of high intensity RF fields must be warned to maintain that restrictive distance, or to discontinue use of radio and radar transmitting equipment.

F-14.2.6. Test Plans. A test plan, or equivalent document, shall be prepared prior to any T&E operation involving energetic materials. The test plan must be reviewed by first management to determine if the operation falls within the standard operations already approved with existing SOPs. Test operations which are not covered by existing SOPs require review and approval by RDT&E management.

F-14.2.7. Hazard Assessment Tests. Sites where hazard assessment tests (e.g., drop test, bullet impact, fast cook-off) are conducted in accordance with MIL-STD-2105 (as defined in paragraph 3-3.2) must be site approved as intentional detonation/burn sites when a qualitative hazard assessment indicates that a detonation or deflagration can be an expected outcome of the test.

F-14.3. T&E OPERATIONS ASHORE.

F-14.3.1. Inspection Requirements. In the course of meeting T&E objectives, energetic materials and ordnance items are exposed to environments that are not normally acceptable according to this manual (for example, high temperature, shock, impact, etc.). They may also be required to undergo further testing in accordance with an approved T&E plan. The SOP or supplemental documentation (in accordance with paragraph F-4) for such operations must include criteria and/or inspection procedures for determining that it is safe to proceed to the next operation in the test schedule.

F-14.3.2. Disposal Procedures. Procedures must be established in the test operation SOP, or referenced therein, for the disposal of energetic materials and ordnance items that are damaged as a result of mishandling and deemed unsafe. See paragraph F-14.6 for expended ordnance.

F-14.3.3. Transportation of In-Process Items. Frequently it will be necessary to transport energetic materials and ordnance items that are undergoing T&E operations from one site to another, either for inspection or for continued testing. In the cases where these energetic materials and ordnance items have been exposed to environments normally excluded by this manual, the SOP or supplemental documentation (in accordance with paragraph F-4) for these operations must include the inspections and precautions to be taken to ensure that ordnance items are safe to transport.

F-14.3.4. Firing Sites. In the performance of T&E operations it is frequently necessary to have sites established where energetic materials are intentionally initiated. These may be open air sites or closed structures such as bomb proofs and test chamber, or even underwater environments in aquariums, filled quarries, or inland waterways. There are both fixed and portable systems which may consist of the firing line control, firing line system and the firing pad. The design of these fixed and portable systems must be reviewed by the DWESO and included in a site approval in accordance with chapter 8 for the type of procedure being performed.

a. Firing Line Design and Implementation. An electrical firing system (hereafter referred to as firing system is the assembly of equipment necessary to initiative explosives with EED. The system includes power supplies or batteries, control panel, pickle switches, circuit or resistance testers, safety (toggles, knife, or rotary) switches and cutouts, electrical cables, and conduit that safely provide the controlled electrical power to initiate an EED. Firing system design and implementation must include

multiple layers of safety systems or components. The objective is that if one layer fails (for example, if the grounding to test item fails) it should not create an unsafe firing line condition. Firing systems must provide protection against static electricity, inadvertent application of electrical power, induced current, or difference in potential between the control location and the location of the test item. There are complications involved with standardizing firing systems; therefore, solutions must integrate various requirements that necessitate trade-offs. For example, static electricity is most effectively controlled by a low resistance path to ground while a direct short needs higher resistance to ground to limit the current that can flow through an initiator bridgewire. An example of a firing system circuit is provided in figure F-3. Paragraph 5-3.4.3 provides additional information regarding EEDs.

(1) Multiple layers of safety systems or components must include the physical isolation from potential power sources. Consideration must be given to such things as wires breaking and coming in contact with firing lines. For example, conduit not only provides electrical shielding but mechanical protection from damage.

(2) Firing line terminations must be in enclosures. Within the enclosures, the barriers around firing line terminations will be made so that conductors and terminations from the fire set side are isolated from the firing line safing side. Exceptions are permitted for temporary test sites. For these sites, the firing line termination will be specified in the SOP.

b. Fixed Firing Line Systems. Fixed firing line systems are to be installed in a manner so that they are hard-wired, uniquely identified and completely isolated from all other wiring and extraneous sources of energy.

c. Firing Line Control. A positive method of firing system control that will ensure isolation of firing lines from all sources of power must be provided. Keyed lockout systems should be used wherever practical. Keys to these systems are to be in the possession of personnel responsible for connecting firing lines to test items. When keyed lockout systems are not practical, the SOP must define procedures to meet this requirement.

d. Grounding. Firing lines, initiators, test assemblies and personnel must be maintained at the same electrical potential at all times before and during hookup. Suitable grounding systems are to be provided at test sites to assist in obtaining this result. Firing systems and grounding systems shall be tested at least every 12 months.

e. Initiation Devices. The electro-explosive device (EED) which is least sensitive (or most insensitive to unplanned energetic stimuli) that will meet the test requirements for initiation purposes must be used.

(1) Mk 70 and Mk 71 initiation devices are forbidden for all test and new development programs unless the following conditions are met:

(3) The test in which the Mk 70 or Mk 71 device is to be used will be compromised if a substitute initiating device is used.

(4) The person handling these sensitive devices has been adequately trained and certified to work with the approved list of items that contain the Mk 70 and Mk 71 initiating devices being controlled.

(5) EEDs of the exploding bridgewire (EBW) or Exploding foil (EFI) type which contain only secondary explosives are to be used whenever practical. Where that is impractical, devices meeting

design criteria specified in MIL-DTL-23659 (series) having a one ampere/one watt no-fire rating and that pass the simulated human body electrostatic test (25,000 volts on a 500 picofarad capacitor with a maximum of 5,000 ohms series resistance) may be used.

(6) Only initiation devices specified in approved SOPs or approved supplemental documentation shall be used.

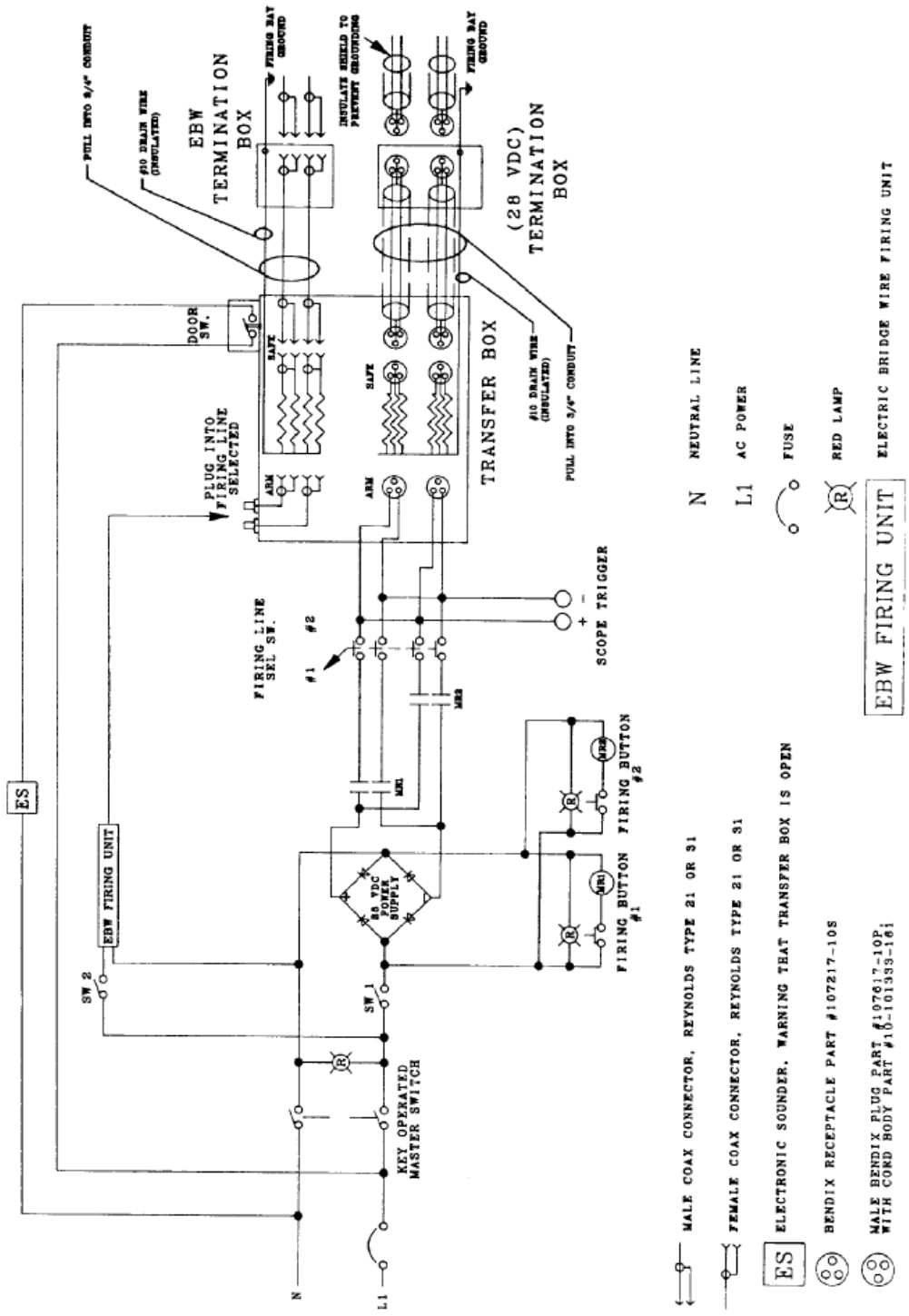

Figure F-3. Example Firing Line Circuit (Sheet 1 of 2)

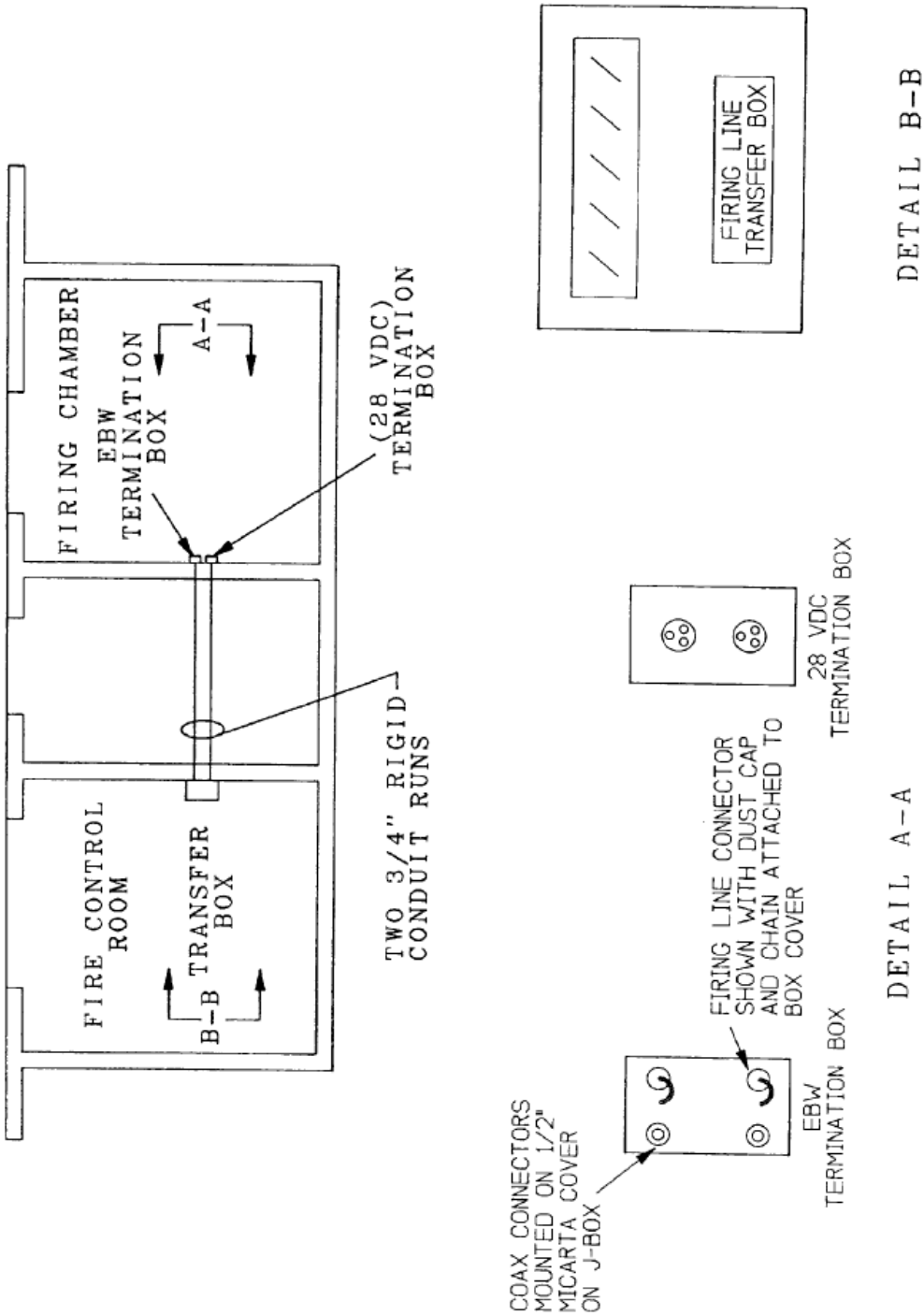

Figure F-3. Sample Floor Plan (Sheet 2 of 2)

f. Connecting EEDs. The SOP for connecting EEDs shall specify requirements for:

(1) The minimum number of personnel allowed to be present when an EED is being connected to the firing line,

(2) The appropriate shielding (described in paragraph F-8) provided to protect personnel from hazards associated with connecting the EED, and

(3) The step-by-step sequence of EED installation into the device to be initiated.

⚠ WARNING

Never use a multimeter to check continuity of a firing circuit that includes EED. Only activity approved devices that are current (amperage) limited may be used for checking continuity in a circuit that includes an EED.

g. Voltage Check Before Connecting EED. Firing line must be checked to ensure that no voltage is present before connecting an EED or if voltage is presented, the acceptable limit is identified in the SOP. The voltage check is to be line-to-line and line-to-ground for both AC and DC voltages. Only calibrated meters designed for this purpose and approved by the local safety office and line management must be used.

h. Conditions for Shutdown of Firing Operations. Refer to paragraph 6-10 for guidance on shutdown of firing operations during electrical storms

i. Non-electric firing. Some ordnance firings are not electrically initiated by EEDs but are instead fired by mechanical means such as lanyard, release of a handle, gas, or hydraulic pressure. Mechanically fired devices will have a safety wire or pin installed until the last possible moment.

(1) A firing mechanism is taken off SAFE status or placed in an operating position, it should be performed remotely, from a sufficiently safe distance.

(2) Any gas- or hydraulic-pressure-initiated firing mechanism will be rendered inoperative by disconnecting the gas or hydraulic supply or venting the gas to the atmosphere before loading the cartridge or connecting it to the breech mechanism or cartridge-actuated device

(3) A lanyard will be connected to a firing mechanism only when required and removed as soon as not required

(4) Mechanically fired devices that use electrical components such as solenoids or actuators to arm or fire the device will observe the wiring (firing lead) and firing system precautions listed in this section for EEDs.

F-14.3.5. Firing Officers. Firing Officers or equivalent position designated by an RDT&E activity (i.e., Range Safety Officers, Firing Directors) are responsible for the safe conduct of any ground or static fired test requiring the initiation of energetic materials. Each Command must develop a program for training and certifying Firing Officers. Firing Officers shall be appointed in writing by the CB and line management. The maximum term of appointment must be twelve months before a renewal or recertification is required.

b. Firing Officers have complete responsibility and authority for the safety of the test area being used and for the safe conduct of the tests, and will:

(1) Be present during each firing,

(2) Be thoroughly briefed before firing time, and have an opportunity to conduct or participate in the planning,

(3) Have the SOP and supplemental documentation available at the site and ensure that they are followed,

(4) Coordinate operations in the firing area,

(5) Have control of the number of personnel in the firing area and the conditions under which they are permitted access to the firing area,

(6) Be responsible for all energetic materials in the firing area and when they are allowed to be delivered to the firing area,

(7) Be responsible for the setup of all energetic materials at the firing site,

(8) Determine when it is safe to connect the firing line to the initiating device,

(9) Be responsible for the firing, and

(10) Follow safety procedures established by the sop, the sops associated risk hazard assessment and supplemental documentation when dud, misfired or malfunctioned ordnance is present in the test area.

F-14.3.6. Project Personnel. Project personnel requesting T&E work have the responsibility to:

a. inform the Firing Officer or appropriate test personnel of the sensitivity data or characteristics of all energetic materials and components used in tests, and

b. inform the Firing Officer of all known characteristics of the ordnance items, or power sources (i.e., batteries), devices, or components to be tested that might affect safety.

F-14.3.7. Expedient Shipping/Storage Containers. T&E of energetic materials, devices and prototype ordnance items often occurs early in the development cycle of munitions. Specific shipping containers for these items have not yet been developed, or attached instrumentation may make the device incompatible with existing shipping containers. Therefore, expedient shipping containers may be used for storage and transportation of experimental items provided:

a. They remain on government property and are never shipped over public transportation routes,

b. They protect the item from damage during normal handling,

c. They contain, isolate or seal any energetic material from the environment,

d. They are properly labeled to clearly identify the contents, and

e. They are identified in the SOP or supplemental documentation as described in paragraph F-4.

Encased ordnance items such as experimental warheads, rocket motors and bombs may not require a shipping/storage container if the above criteria in subparagraphs a through d are satisfied. Management and the responsible local explosives safety office have authority to decide.

F-14.4. T&E OPERATIONS AT SEA.

F-14.4.1. Compliance with Federal Regulations. Any RDT&E energetic material must be considered explosive cargo or explosive loaded ordnance. Therefore, the stowage requirements, as specified by 49 CFR 176 Subpart G (series), apply to all vessels transporting explosives at sea.

F-14.4.2. Compliance with OP 4. All T&E operations performed at sea, on fleet vessels must comply with NAVSEA OP 5, appendix G and NAVSEA OP 4 where applicable. RDT&E operations performed aboard research vessels must comply with this appendix and NAVSEA OP 4, where applicable.

F-14.4.3. Test Coordinator. The Test Coordinator has responsibility for making all pre-deployment arrangements. The Test Coordinator must:

a. Ensure that all T&E personnel who will be handling energetic materials meet the requirements of paragraph F-3,

b. Obtain documentation of certification for all T&E personnel and furnish it to the Test Director,

c. Ensure that copies of all pertinent directives and instructions which may be required while deployed (such as NAVSEA OP 4, OPNAVINST 5102.1(series), sops, supplemental documentation, applicable technical manuals, applicable operational manuals, etc.) Are provided to the Test Director, and

d. Alert the Test Director of any discrepancies between RDT&E procedures and fleet procedures which need to be resolved.

F-14.4.4. Test Director. The Test Director has responsibility for all T&E operations performed while deployed. The Test Director must be appointed in writing by the CB and RDT&E management. The maximum term of appointment is 12 months before a renewal or recertification is required. The Test Director must:

a. Prepare the test plan and submit it for approval by a peer review team and RDT&E management and the OSC,

b. Provide an approved test plan to the OIC of the vessel,

c. Ensure that all procedural discrepancies pertaining to T&E operations at sea are resolved with the OIC of the vessel before departure,

d. Be aboard the vessel conducting T&E operations,

e. Be responsible for all energetic materials used,

f. Be responsible for the setup of each test,

g. Be responsible for the firing of each test,

h. Have the option to delegate responsibilities for the setup and firing of specific tests to a project engineer,

i. Follow approved procedures for handling dud, misfired or malfunctioned ordnance, and

j. Report to the OIC of the vessel while at sea.

F-14.4.5. Project Engineer. A Project Engineer may be designated by the Test Director to perform specific duties at sea. A Project Engineer has responsibility to:

a. Inform the Test Director of the sensitivity characteristics of all energetic materials and components used,

b. Inform the Test Director of all known characteristics of the ordnance items and devices being tested,

c. Be present during each test for which responsibility has been delegated,

d. Be responsible for the setup of each test for which responsibility has been delegated, and

e. Be responsible for the firing of each test for which responsibility has been delegated.

F-14.4.6. Test Plan. For operations at sea, a test plan will be prepared to describe/define the following:

a. Purpose of test,

b. Test date(s),

c. Operating area,

d. Name and description of test vessel(s),

e. Identification of T&E personnel,

f. Test schedule,

g. Description of assignments and responsibilities,

h. Equipment required,

i. Description or manifest of ordnance containing energetic materials to be tested,

j. Description of T&E operations (including identification of sops and supplemental documentation approved for the specific T&E operations to be performed),

k. Plans for disposition of ordnance items, components, and supplies,

l. Safety precautions including ordnance deployment, radio frequency hazards, weather, shipboard casualties and medical assistance, and

m. Applicable environmental requirements compliant with OPNAVINST 5090.1 (series).

F-14.4.7. Ordnance Initiating Devices. All ordnance initiating devices used at sea must be designed to incorporate basic safety design features. The firing trains used at sea will conform to MIL-STD-1316 (series).

F-14.4.8. Energetic Materials and Ordnance Items Used at Sea. Experimental energetic materials having unknown safety characteristics must not be used at sea. The minimal safety data required for energetic materials used in T&E operations at sea is the same as that described in paragraph F-12.2.2.i. All energetic materials, devices, or ordnance items tested at sea must have at least an interim hazard classification assigned in accordance with NAVSEAINST 8020.8 (series).

F-14.4.9. Packaging of Ordnance Items for Use at Sea. Ordnance items for T&E operations performed at sea must be packaged in appropriate containers and prepared for shipment as prescribed by 49 CFR 100 through 177, and MIL-STD-129 (series).

F-14.4.10. Clearance for Deploying RDT&E Ordnance. Coordination with local Commands, local authorities and port authorities is required. Coordination with the U.S. Coast Guard is necessary for T&E operations in buoyed waters. Clearance for T&E operations at sea must be obtained in accordance with OPNAVINST 3100.5 (series).

F-14.4.11. Ordnance Launching Devices. Any equipment used to launch RDT&E ordnance items at sea must be subject to RDT&E peer review described in paragraph F-7, and must be specifically identified in the SOP or supplemental documentation approved for the specific T&E operation being performed. All T&E personnel using these devices must be certified to use them in accordance with paragraph F-3.

F-14.4.12. Stand-Off Limits for Preventing Hull Damage. The likelihood of damage to a surface ship from an explosion is determined by the charge weight, charge depth, the explosive composition, the position of burst relative to the ship, the ocean conditions, the ocean bottom hardness, water depth and the type of ship. The stand-off limits can be determined in by calculating shock factor for an acceptance standoff range for ship. See figure F-4.

$$SF = \frac{\sqrt{W}}{R} \times \frac{(1 + \cos\theta)}{2}$$

R = the slant range in feet, the actual distance of the ship to the charge at depth.

W = the equivalent TNT charge weight in pounds (lbs.)

θ = the angle between the ship keel and the charge from the vertical, determined by charge depth (D) and horizontal range (h).

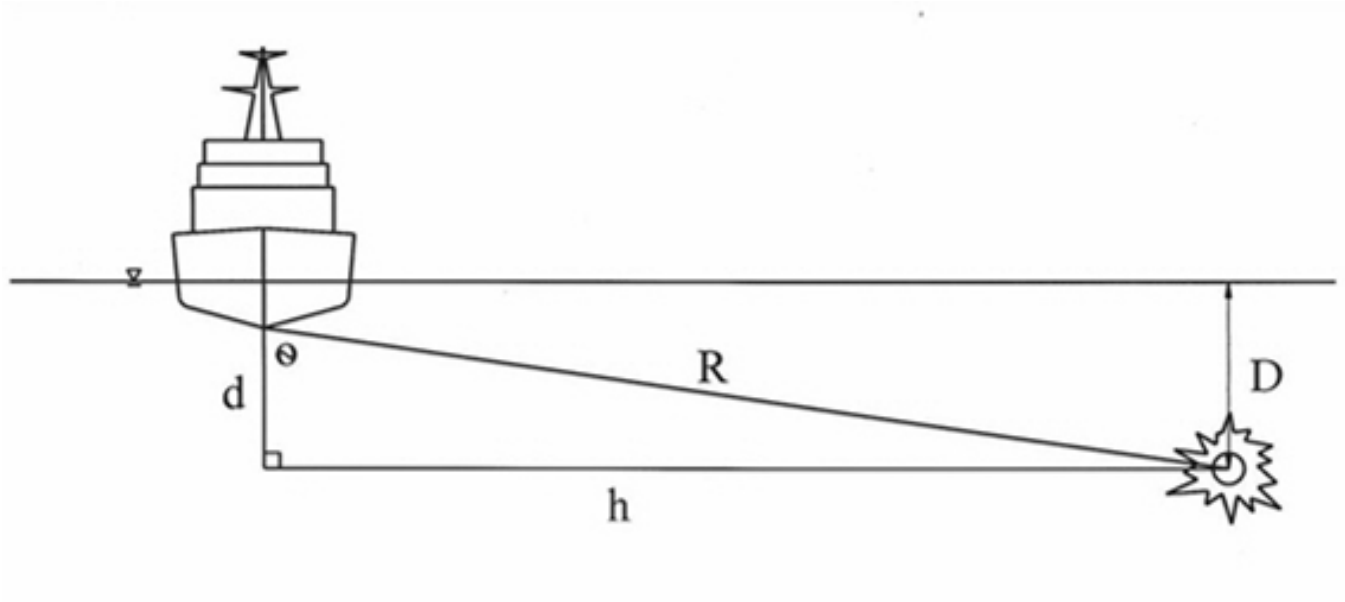

Figure F-4. Stand-Off Limits for Preventing Hull Damage

a. If the TNT equivalency of the RDT&E energetic material is not known, then the shock factor must be calculated using the actual NEW of the energetic material.

b. Unless otherwise permitted by the OIC of the vessel and the Test Director, the minimum stand-off distance is that which corresponds to a shock factor of 0.01.

F-14.4.13. On the Scene Responsibilities in Case of an Accident or Incident. The OIC is responsible for the operation and safety of the vessel. In the event of an accident or incident involving personnel injuries, the following sequence will be strictly adhered to:

a. Assess damage to the ship and commence emergency repairs to insure the safety of the ship,

b. When it is safe to enter the accident area, render first aid to the injured,

c. Notify the Coast Guard and, if warranted, arrange for evacuation of injured personnel,

d. Report the accident in the format prescribed by OPNAVINST 5102.1 (series), and

e. Begin preparations for an accident investigation as prescribed by OPNAVINST 5102.1 (series).

F-14.5. RDT&E OPERATIONS INVOLVING FIXED AND ROTATING WING AIRCRAFT.

F-14.5.1. Compliance with Federal Regulations. Any RDT&E energetic material must be considered explosive cargo or explosive loaded ordnance. Therefore, the stowage requirements, as specified by 49 CFR 175, apply to all aircraft transporting explosives.

F-14.5.2. Test Coordinator. The responsibilities of the Test Coordinator are the same as those described in paragraph F-14.4.3.

F-14.5.3. Test Director. The responsibilities of the Test Director are the same as those described in paragraph F-14.4.4.

F-14.5.4. Project Engineer. The responsibilities of a Project Engineer are the same as those described in paragraph F-14.4.5.

F-14.5.5. Test Plan. For T&E operations aloft, a test plan will be prepared to describe or identify the following:

a. Purpose of test,

b. Test date(s),

c. Operating area or location,

d. Description of test aircraft (and other vehicles or vessels involved, if applicable),

e. T&E personnel,

f. Test schedule,

g. Description of assignments and responsibilities,

h. RDT&E equipment required,

i. Description or manifest of ordnance containing energetic materials to be tested,

j. Description of T&E operations (including identification of sops and supplemental documentation approved for the specific T&E operations to be performed),

k. For operations that involve the use of land or sea ranges, the corresponding range test plan must be either appended or referenced.

l. Plans for disposition of undeployed energetic materials, ordnance items and T&E materials,

m. Specific safety precautions regarding ordnance deployment, radio frequency hazards, inclement weather, emergency landings/evacuations, jettisoning hardware, accidents and medical assistance, and

n. Applicable environmental requirements compliant with OPNAVINST 5090.1 (series).

F-14.5.6. Aircraft Training. All T&E personnel going aloft must receive aircraft safety and emergency training required by local authorities prior to conducting T&E operations onboard aircraft. Training is specified in the instructions applicable to each type of aircraft.

F-14.5.7. Approval for Test Evolutions from Aircraft. RDT&E management, and the responsible local explosives safety office must approve any proposed hardware configurations which store, handle or use ordnance items containing energetic materials aloft. If fleet assets are involved in airborne T&E operations with energetic materials, the Naval Air Test Center (NATC) Patuxent River, or its designee, must also be an approval authority.

F-14.5.8. Clearance for Tests Over Water. Coordination with the U.S. Coast Guard is necessary if tests are to be conducted in buoyed waters. Planning/requesting airspace must be accomplished per OPNAVINST 3770.2 (series). Scheduling and approval for the use of DoW test facilities/ranges must be accomplished as specified in OPNAVINST 3900.25 (series). The Test Coordinator or other designated person is responsible for obtaining clearances and for coordination with port authorities.

F-14.5.9. Clearance for Tests Over Land. Normally, tests over land will be conducted at government-owned military test ranges. Approval for tests at ranges must be obtained as specified in OPNAVINST 3900.25 (series). Planning/requesting airspace must be accomplished as specified in OPNAVINST 3770.2 (series).

F-14.5.10. Energetic Materials and Ordnance Items Used Aloft. Experimental energetic materials having unknown safety characteristics must not be used aloft. The minimal safety data required for energetic materials used in T&E operations aloft is the same as that described in paragraph F-12.2.2.i. All energetic materials, devices or ordnance items tested aloft must have at least an interim hazard classification assigned in accordance with NAVSEAINST 8020.8 (series).

F-14.5.11. Aircraft Loading/Unloading Operations.

a. Aircraft will be located in an area specifically approved for loading/unloading energetic materials. Aircraft operating from surface ships will load/unload hardware containing energetic materials only at designated locations.

b. During loading/unloading operations, all ignition switches will be in the off position. The aircraft must be securely chocked and grounded.

c. Unless specifically approved, ammunition containers will not be opened prior to loading onboard the aircraft. Containers which are open to the environment will not be on/offloaded.

d. All T&E operations involving loading/unloading of hardware containing energetic materials will be conducted only by qualified/certified ordnance handling personnel.

e. Ammunition containers that hold hardware loaded with energetic materials will never be opened inside or outside the aircraft during fueling operations.

f. Containers that hold the test hardware will be stored onboard the aircraft in approved storage areas and will be firmly secured prior to take-off.

g. The aircraft's radio/radar equipment must be secured, and safe separation distances from other aircrafts' radio/radar transmissions must be maintained according to the requirements of NAVSEA OP 3565 Volume 2.

F-14.5.12. In-Flight Operations.

a. Containers that hold test hardware must not be removed from secure storage in flight until the OIC of the aircraft authorizes it.

b. Unless permitted by the approved SOP or approved supplemental documentation, only one container must be opened at any one time.

c. Ordnance item and hardware must be tested only as prescribed in the approved SOP and approved supplemental documentation. If the T&E operation cannot be performed as approved, the test will be cancelled.

d. Test hardware will be deployed only in approved test areas. Tests over land must be specifically approved by the commanding officer of the activity where the test range is located. Prior written approval must be obtained for testing over land or water as given in paragraphs F-14.5.8 and F-14.5.9.

e. After T&E operations are completed, all containers will be secured in the storage area for return to the ship/airfield.

F-14.6. EXPENDED ORDNANCE.

F-14.6.1. T&E operations frequently result in expended ordnance items that may be contaminated with residual energetic materials or other hazardous materials. Procedures for decontamination and/or disposal of such items must be clearly identified in the SOP for the operation involved. This may be by reference to the applicable safety document for the facility involved, or it may be spelled out in the SOP. All expended ordnance items are to be considered hazardous and handled and stored as such until certified as non-hazardous (safe to handle). The Commander or his designee shall appoint individuals to certify expended ordnance as either hazardous or nonhazardous.

F-14.6.2. Hazardous expended ordnance shall be turned over to explosive ordnance disposal (EOD) personnel only. Expended ordnance items that have been certified as nonhazardous shall be identified, labeled and stored at an appropriate site dedicated for such nonhazardous expended ordnance until another test can be performed.

THIS PAGE INTENTIONALLY BLANK

Ref: NAVSEAINST 4160.3 NAVSEA S0005-AA-PRO-010/TMMP

NAVSEA/SPAWAR TECHNICAL MANUAL DEFICIENCY/EVALUATION REPORT (TMDER)

INSTRUCTIONS: Continue on 8 ½" x 11" page if additional space is needed.
1. Use this report to indicate deficiencies, problems and recommendations relating to publications.
2. For **NOFORN** TMDERs mailing requirements, see OPNAVINST N9210.3.
3. For **CLASSIFIED** TMDERs mailing requirements, see SECNAV M-5510.36.
4. For TMDERs that affect more than one publication, submit a separate TMDER for each.
5. Submit TMDERs at web site https://nsdsa.dc3n.navy.mil or mail to: **COMMANDING OFFICER, CODE 310 TMDERs, NAVSURFWARCENDIV NSDSA, 4363 MISSILE WAY BLDG 1389, PORT HUENEME CA 93043-4307**

CLASSIFICATION

1. PUBLICATION NUMBER	2. VOL/PART	3. REV/DATE OR CHG/DATE	4. SYSTEM/EQUIPMENT ID

5. TITLE OF PUBLICATION	6. REPORT CONTROL NUMBER (6 digit UIC-YY-any four: xxxxxx-10-xxxx)

7. RECOMMEND CHANGES TO PUBLICATION

7a. Page #	7b. Para #	7c. RECOMMENDED CHANGES AND REASONS

8. ORIGINATOR'S NAME AND WORK CENTER	9. DATE	10. ORIGINATOR'S E-MAIL ADDRESS	11. TMMA of Manual (NSDSA will complete)

12. SHIP OR ACTIVITY Name and Address (Include UIC/CAGE/HULL)	13. Phone Numbers:
	Commercial (____) ____-_____ DSN ____-_____ FAX (____) ____-_____

FOLD HERE AND TAPE SECURELY
PLEASE DO NOT STAPLE

INCLUDE COMPLETE ADDRESS

USE
PROPER
POSTAGE

FOR OFFICIAL USE ONLY

COMMANDING OFFICER
CODE 310 TMDERs
NAVSURFWARCENDIV NSDSA
4363 MISSILE WAY BLDG 1389
PORT HUENEME CA 93043-4307

FOLD HERE AND TAPE SECURELY
PLEASE DO NOT STAPLE

THIS PAGE INTENTIONALLY BLANK

0640-LP-002-2887