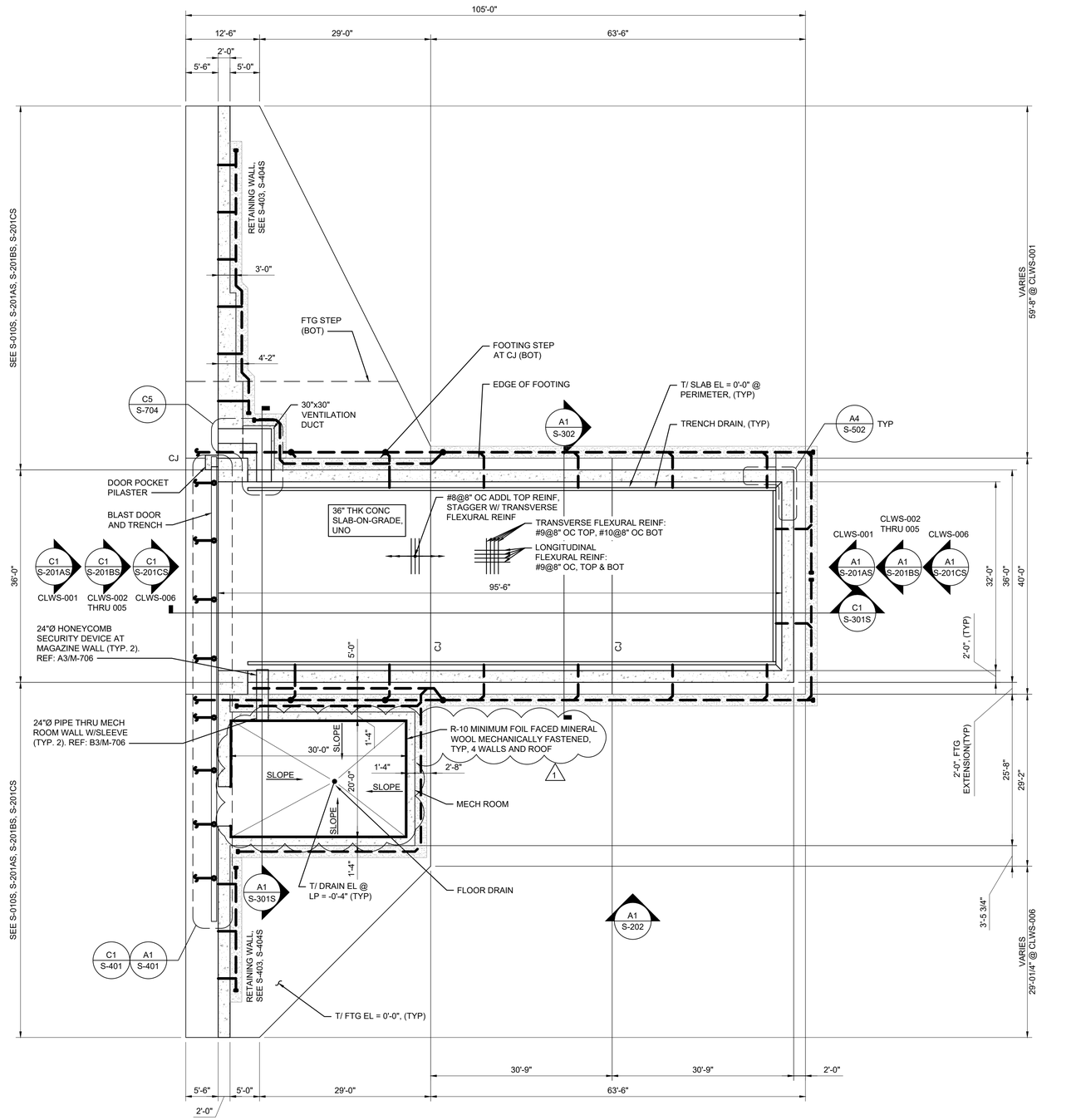

A2 FOUNDATION/ FLOOR PLAN
SCALE: 3/32" = 1'-0"

0 8' 16' 32'

SHEET NOTES

1. ALL ELEVATIONS ARE IN REFERENCE TO A DATUM ELEVATION OF 0'-0" FOR THE MAGAZINE FINISHED FLOOR ELEVATION. SEE CIVIL DRAWINGS FOR ACTUAL ELEVATIONS.
2. SEE SHEETS S-001, S-002, S-003, AND S-004S FOR GENERAL NOTES.
3. ALL REINFORCING STEEL MUST BE CONTINUOUSLY BONDED AND GROUNDED PER S-002 AND A1/E-504S
4. SLAB-ON-GRADE MUST BE MOIST CURED FOR A MINIMUM OF 14 DAYS.
5. SLAB-ON-GRADE CONSTRUCTION JOINTS ARE INDICATED AS "CJ" ON PLAN. SEE STANDARD DETAIL ON S-003 FOR CONSTRUCTION JOINT DETAILS.
6. BLAST DOOR IS NOT SHOWN FOR CLARITY.
7. SEE SHEET S-302 FOR ARRANGEMENT OF SLAB REINFORCEMENT AND FOR SIDEWALL REINFORCEMENT SIZE, SPACING, AND ARRANGEMENT.
8. SEE SHEET S-104 FOR FOUNDATION DRAINAGE FLOOR PLAN.
9. SEE CIVIL FOR EXTENTS OF RIGID INCLUSION GROUND IMPROVEMENT.

THESE DRAWINGS HAVE BEEN ADAPTED FROM APPROVED NAVFAC MUNITIONS STORAGE CONSTRUCTION DOCUMENTS, NAVFAC DRAWING NUMBERS 12877610 TO 12877660, APPROVED BY DDESB ON 20 MARCH 2023. JACOBS DOR RESPONSIBILITY AND SEAL APPLICABILITY IS LIMITED TO THE SITE ADAPTATIONS AND MODIFICATIONS MADE TO THIS DRAWING.

ORIGINAL STANDARD DRAWING IS NAVFAC DRAWING NUMBER 12877614 SHT 5 OF 51

SYM	DESCRIPTION	DATE	APPR
1	REVISIONS FOR AMENDMENT	4/27/2026	

NAVFAC

LAURA ARICO PRESLEY, REGISTERED ENGINEER, AGRICULTURE, COMMERCE, No. 106362, STATE OF TENNESSEE, 04/27/26
SEAL

Jacobs
1100 NORTH GLEBE ROAD
SUITE 500
ARLINGTON, VIRGINIA 22201
571.218.1000
FAX: 571.218.1600
A/E INFO

APPROVED
FOR COMMANDER NAVFAC 5/5/2026

ACTIVITY
APPROVED BY LCDR ELIZABETH OLOKODE NAVFAC NLOD FEAD DIRECTOR NEW LONDON, GROTEN, CT

SATISFACTORY TO	DATE 05/27/2025		
DES JAF	DRW SFF	CHK TPH	
PM/DM	SMS/CWJ		
BRANCH MANAGER	NEK		
CHIEF ENG/ARCH	JWJ		
FIRE PROTECTION	HPN		

DEPARTMENT OF THE NAVY
NAVAL FACILITIES ENGINEERING SYSTEMS COMMAND
MID-ATLANTIC
NAVAL SUBMARINE BASE NEW LONDON
GROTON, CONNECTICUT
P-1102 WEAPONS MAGAZINE & ORDNANCE OPERATIONS FACILITY
CLWS MAGAZINE
FOUNDATION/ FLOOR PLAN

NAVAL FACILITIES ENGINEERING SYSTEMS COMMAND
NAVAL STATION - NORFOLK, VA

SCALE:	AS NOTED
EPROJECT NO.:	1667770
CONSTR. CONTR. NO.	
NAVFAC DRAWING NO.	12894252
SHEET	9 OF 77

S-101S

FILE NAME: C:\pw_workdir\dms0031\jag_billca\d1495963\S-101S.dwg LAYOUT NAME: S-101S PLOTTED: Thursday, April 30, 2026 - 8:47pm USER: HBHCW

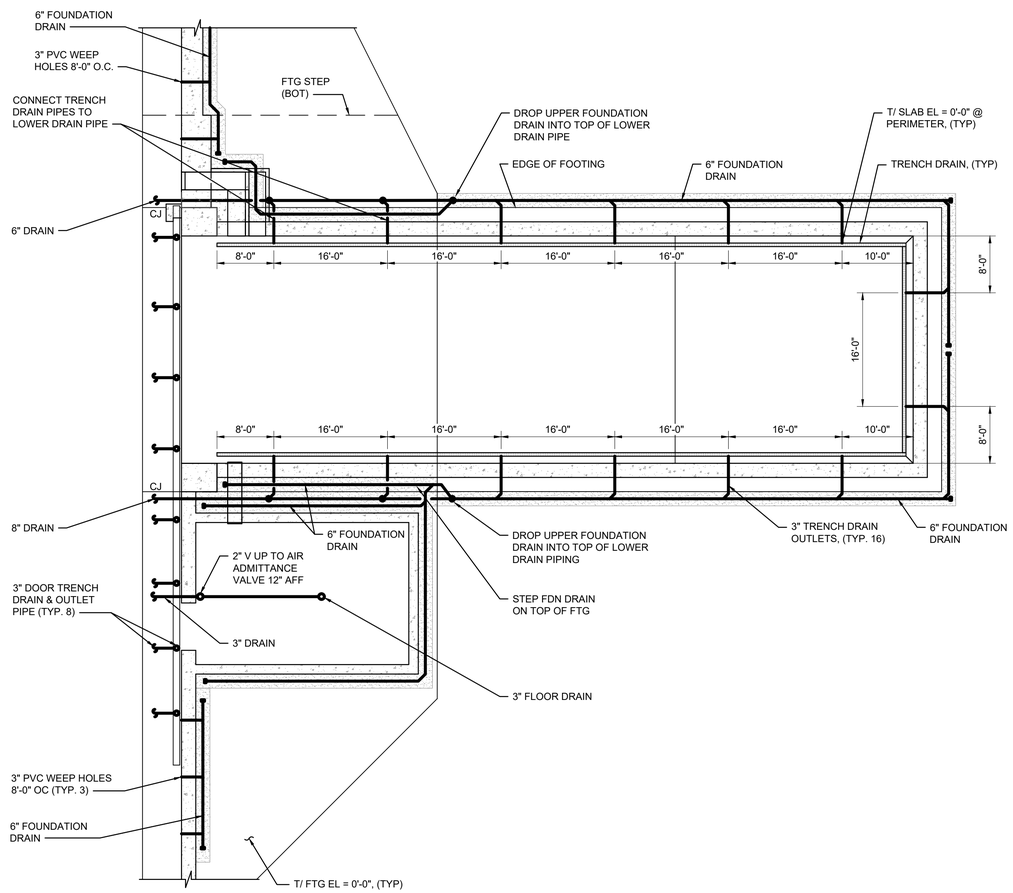

1 NOTE: MECHANICAL ROOM INSULATION NOT SHOWN FOR CLARITY

A2 FOUNDATION DRAINAGE FLOOR PLAN
SCALE: 3/32" = 1'-0"

0 8' 16' 32'

SHEET NOTES

1. ALL ELEVATIONS ARE IN REFERENCE TO A DATUM ELEVATION OF 0'-0" FOR THE MAGAZINE FINISHED FLOOR ELEVATION. SEE CIVIL DRAWINGS FOR ACTUAL ELEVATIONS.
2. SEE SHEETS S-001, S-002, S-003, AND S-004S FOR GENERAL NOTES.
3. ALL REINFORCING STEEL MUST BE CONTINUOUSLY BONDED AND GROUNDED PER S-002 AND A1/E-504
4. SLAB-ON-GRADE MUST BE MOIST CURED FOR A MINIMUM OF 14 DAYS.
5. BLAST DOOR IS NOT SHOWN FOR CLARITY.
6. SEE SHEET S-302 FOR ARRANGEMENT OF SLAB REINFORCEMENT AND FOR SIDEWALL REINFORCEMENT SIZE, SPACING, AND ARRANGEMENT.
7. REFER TO S-706 FOR DRAINAGE ISOMETRIC DIAGRAM
8. FINAL PIPING CONFIGURATION AND TERMINATION POINTS PER SITE-ADAPT ENGINEER.

THESE DRAWINGS HAVE BEEN ADAPTED FROM APPROVED NAVFAC MUNITIONS STORAGE CONSTRUCTION DOCUMENTS, NAVFAC DRAWING NUMBERS 12877610 TO 12877660, APPROVED BY DDESB ON 20 MARCH 2023. JACOBS DOR RESPONSIBILITY AND SEAL APPLICABILITY IS LIMITED TO THE SITE ADAPTATIONS AND MODIFICATIONS MADE TO THIS DRAWING.

ORIGINAL STANDARD DRAWING IS NAVFAC DRAWING NUMBER 12877617 SHT 8 OF 51

SYM	DESCRIPTION	DATE	APPR
1	REVISIONS FOR AMENDMENT	4/27/2026	

NAVFAC

LAURA ARICO PRESLEY REGISTERED ENGINEER AGRICULTURE COMMERCE No. 106362 STATE OF TENNESSEE 04/27/26
SEAL

Jacobs
1100 NORTH GLEBE ROAD
SUITE 500
ARLINGTON, VIRGINIA 22201
571.218.1000
FAX: 571.218.1600
A/E INFO

APPROVED
FOR COMMANDER NAVFAC 5/5/2026

ACTIVITY
APPROVED BY LCDR ELIZABETH OLOKODE NAVFAC NLOD FEAD DIRECTOR NEW LONDON, GROTEN, CT

SATISFACTORY TO DATE 05/27/2025

DES JAF	DRW SFF	CHK TPH	
PM/DM			SMS/CWJ
BRANCH MANAGER			NEK
CHIEF ENG/ARCH			JWJ
FIRE PROTECTION			HPN

DEPARTMENT OF THE NAVY
NAVAL FACILITIES ENGINEERING SYSTEMS COMMAND
MID-ATLANTIC
NAVAL FACILITIES ENGINEERING SYSTEMS COMMAND - MID-ATLANTIC
NAVAL STATION - NORFOLK, VA
NAVAL SUBMARINE BASE NEW LONDON
GROTON, CONNECTICUT
P-1102 WEAPONS MAGAZINE & ORDNANCE OPERATIONS FACILITY
CLWS MAGAZINE
FOUNDATION DRAINAGE PLAN

SCALE: NONE
EPROJECT NO.: 1667770
CONSTR. CONTR. NO.
NAVFAC DRAWING NO. 12894255
SHEET 12 OF 77
S-104S

FILE NAME: C:\pw_workdir\dms0033\jacg_hilicw\d1495963\S-104S.dwg LAYOUT NAME: S-104S PLOTTED: Thursday, April 30, 2026 - 8:41pm USER: HIICW

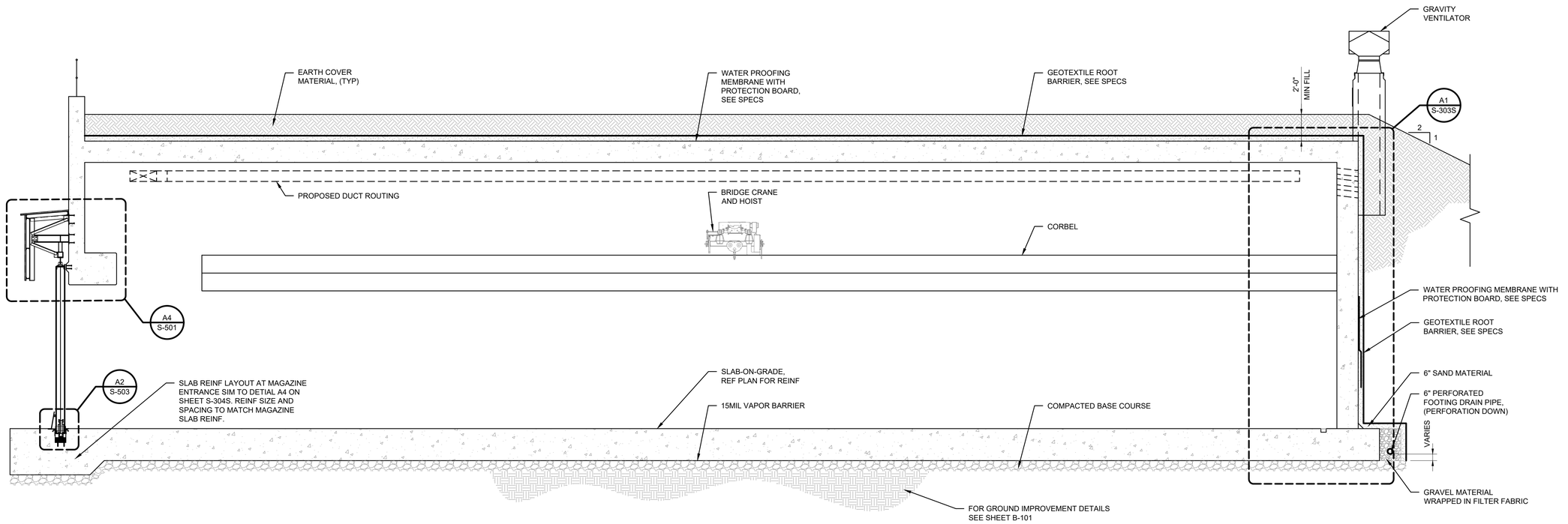

C1 SECTION
SCALE: 3/16" = 1'-0"

0 4' 8' 16'

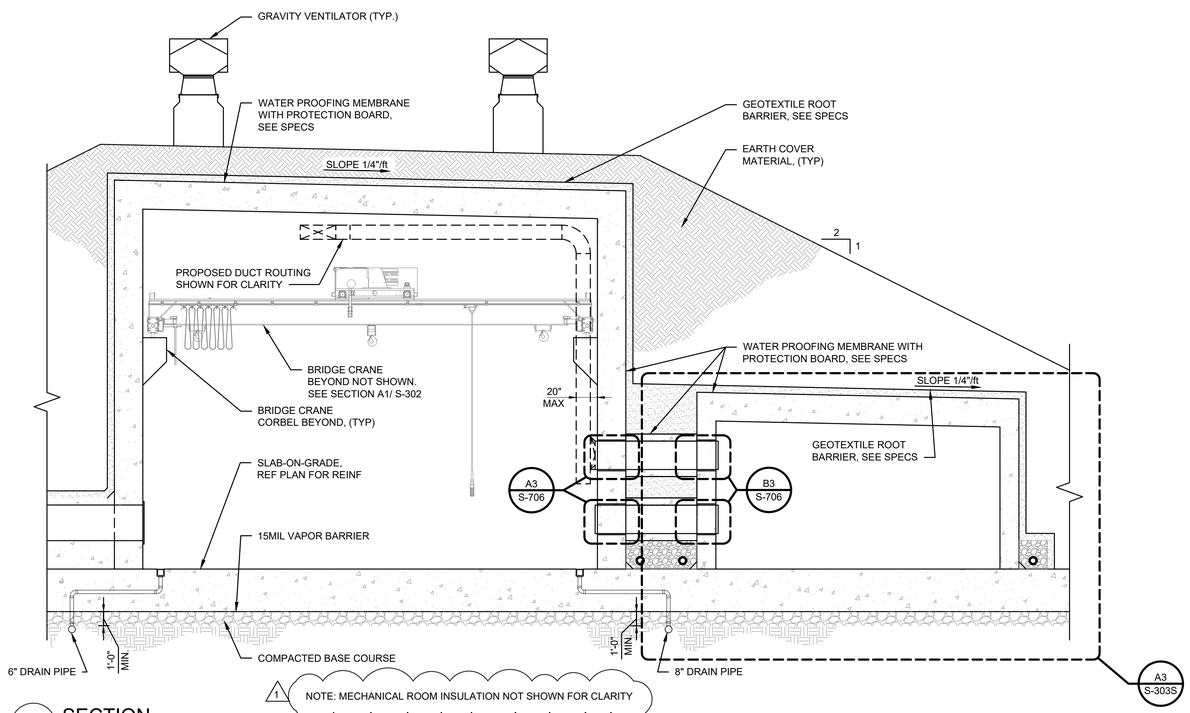

A1 SECTION
SCALE: 3/16" = 1'-0"

0 4' 8' 16'

THESE DRAWINGS HAVE BEEN ADAPTED FROM APPROVED NAVFAC MUNITIONS STORAGE CONSTRUCTION DOCUMENTS, NAVFAC DRAWING NUMBERS 12877610 TO 12877660, APPROVED BY DDESB ON 20 MARCH 2023. JACOBS DOR RESPONSIBILITY AND SEAL APPLICABILITY IS LIMITED TO THE SITE ADAPTATIONS AND MODIFICATIONS MADE TO THIS DRAWING.

ORIGINAL STANDARD DRAWING IS NAVFAC DRAWING NUMBER 12877624 SHT 15 OF 51

SYM	DESCRIPTION	DATE	APPR
1	REVISIONS FOR AMENDMENT	4/27/2026	

NAVFAC

LAURA ARICO PRESLEY REGISTERED ENGINEER AGRICULTURE COMMERCE No. 106363 STATE OF TENNESSEE 04/27/26
SEAL

Jacobs
1100 NORTH GLEBE ROAD
SUITE 500
ARLINGTON, VIRGINIA 22201
571.218.1000
FAX: 571.218.1600

A/E INFO

APPROVED
FOR COMMANDER NAVFAC 5/5/2026

ACTIVITY
APPROVED BY LCDR ELIZABETH OLOKODE NAVFAC NLOD FEAD DIRECTOR NEW LONDON, GROTEN, CT

SATISFACTORY TO DATE 05/27/2025

DES	JAF	DRW	SFF	CHK	TPH
PM/DM	SMS/CWJ				
BRANCH MANAGER	NEK				
CHIEF ENG/ARCH	JWJ				
FIRE PROTECTION	HPN				

DEPARTMENT OF THE NAVY
NAVAL FACILITIES ENGINEERING SYSTEMS COMMAND - MID-ATLANTIC
MID-ATLANTIC
NAVAL FACILITIES ENGINEERING SYSTEMS COMMAND
NAVAL STATION - NORFOLK, VA
NAVAL SUBMARINE BASE NEW LONDON
GROTON, CONNECTICUT
P-1102 WEAPONS MAGAZINE & ORDNANCE OPERATIONS FACILITY
CLWS MAGAZINE
BUILDING SECTIONS

SCALE: NONE
EPROJECT NO.: 1667770
CONSTR. CONTR. NO.
NAVFAC DRAWING NO. 12894264
SHEET 21 OF 77

S-301S

FILE NAME: C:\pw_workdir\dms0023\prj_bilic\d1495963\S-301S.dwg LAYOUT NAME: S-301S PLOTTED: Thursday, April 30, 2026 – 8:34pm USER: HIICW

SHEET NOTE:

1. ALL REINFORCING STEEL MUST BE CONTINUOUSLY BONDED AND GROUNDED PER S-002 AND A1/ E-504.

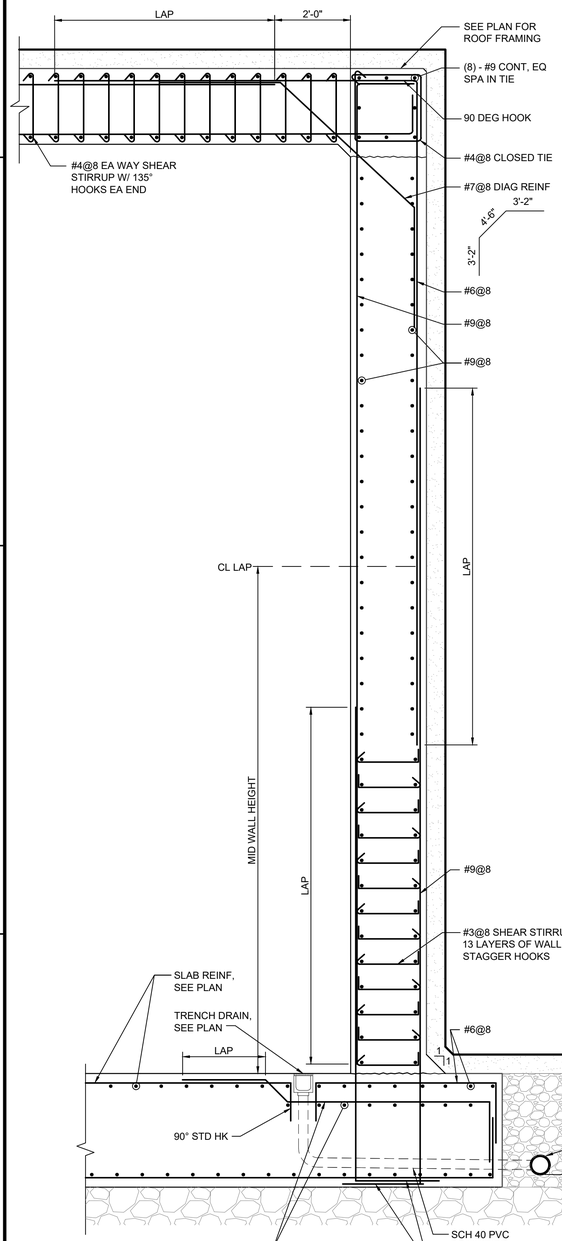

A2 SECTION
A1
0 1' 2' 4'

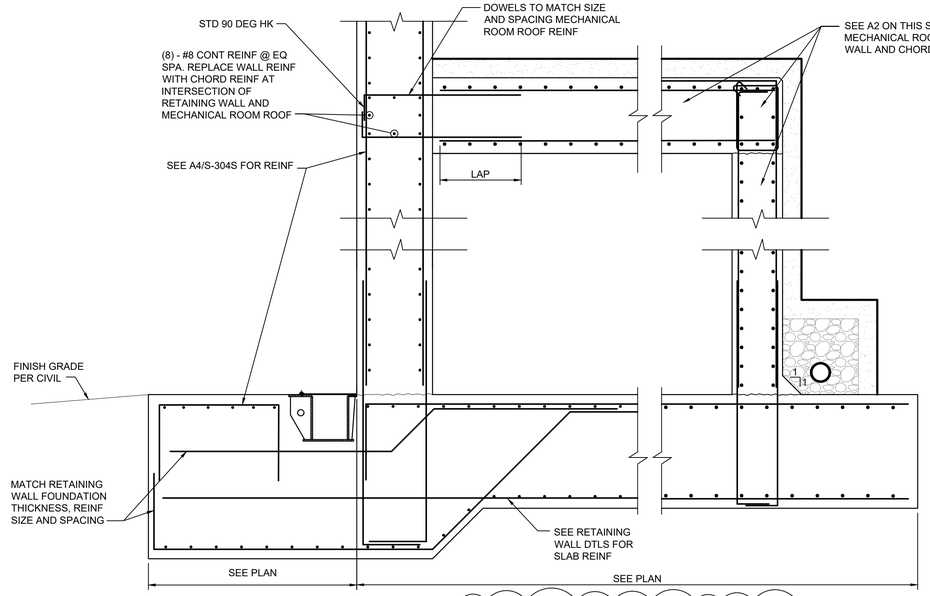

NOTE: MECHANICAL ROOM INSULATION NOT SHOWN FOR CLARITY

C2 SECTION
SCALE: 1/2" = 1'-0'
0 1' 2' 4'

RAIL BEARING PL MUST BE CONSIDERED THE RUNWAY SURFACE FOR THE BRIDGE CRANE AND MUST BE CONSTRUCTED TO RUNWAY TOLERANCES IN ACCORDANCE WITH CMAA SPECIFICATION #70

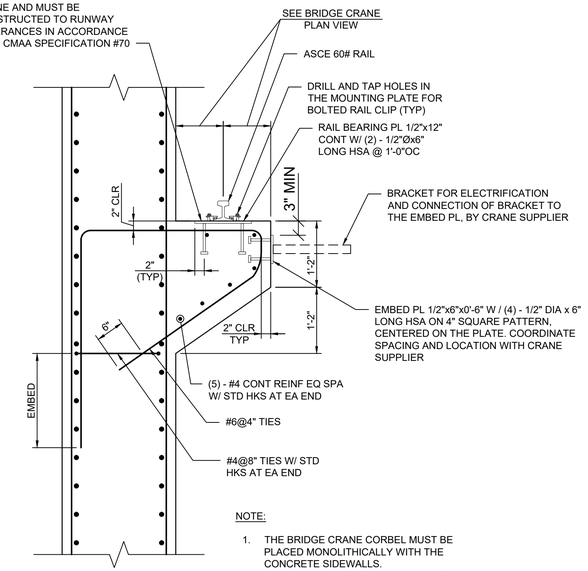

NOTE:

1. THE BRIDGE CRANE CORBEL MUST BE PLACED MONOLITHICALLY WITH THE CONCRETE SIDEWALLS.
2. EMBED PLATES FOR ELECTRIFICATION ARE DESIGNED TO SUPPORT 200 POUNDS AT A MAXIMUM DISTANCE OF 1'-6" FROM THE FACE OF THE CORBEL.

C4 BRIDGE CRANE CONTINUOUS CORBEL DETAIL
SCALE: 3/4" = 1'-0"
0 1' 2' 4'

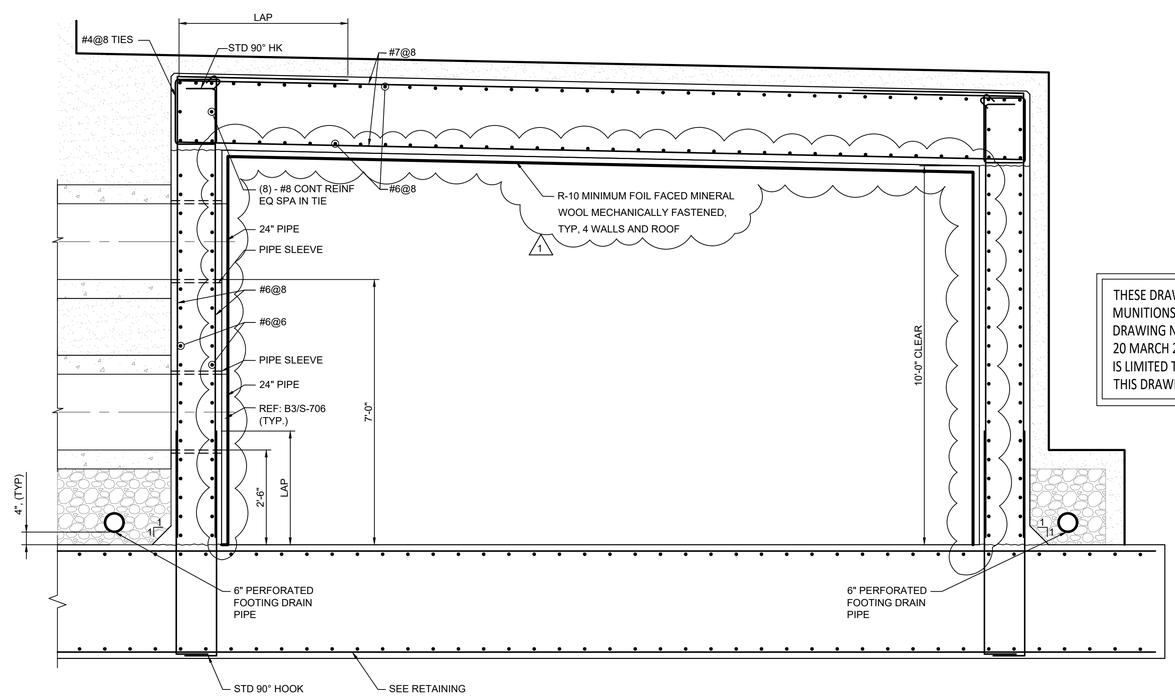

A2 SECTION
SCAL1/2" = 1'-0'
0 1' 2' 4'

THESE DRAWINGS HAVE BEEN ADAPTED FROM APPROVED NAVFAC MUNITIONS STORAGE CONSTRUCTION DOCUMENTS, NAVFAC DRAWING NUMBERS 12877610 TO 12877660, APPROVED BY DDESB ON 20 MARCH 2023. JACOBS DOR RESPONSIBILITY AND SEAL APPLICABILITY IS LIMITED TO THE SITE ADAPTATIONS AND MODIFICATIONS MADE TO THIS DRAWING.

ORIGINAL STANDARD DRAWING IS NAVFAC DRAWING NUMBER 12877626 SHT 17 OF 51

SYM	DESCRIPTION	DATE	APPR
1	REVISIONS FOR AMENDMENT	4/27/026	

NAVFAC

SEAL: LAURA ARICO PRESLEY, REGISTERED ENGINEER, AGRICULTURE, COMMERCE, No. 106362, STATE OF TENNESSEE, 04/27/26

Jacobs
1100 NORTH GLEBE ROAD
SUITE 500
ARLINGTON, VIRGINIA 22201
571.218.1000
FAX: 571.218.1600

A/E INFO

APPROVED
FOR COMMANDER NAVFAC 5/5/2026

ACTIVITY
APPROVED BY LCDR ELIZABETH OLOKODE NAVFAC NLOD FEAD DIRECTOR NEW LONDON, GROTEN, CT

SATISFACTORY TO	DATE 05/27/2025		
DES JAF	DRW SFF	CHK TPH	
PM/DM	SMS/CWJ		
BRANCH MANAGER	NEK		
CHIEF ENG/ARCH	JWJ		
FIRE PROTECTION	HPN		

DEPARTMENT OF THE NAVY
NAVAL FACILITIES ENGINEERING SYSTEMS COMMAND
MID-ATLANTIC
NAVAL FACILITIES ENGINEERING SYSTEMS COMMAND - MID-ATLANTIC
NAVAL STATION - NORFOLK, VA
NAVAL SUBMARINE BASE NEW LONDON
GROTON, CONNECTICUT
P-1102 WEAPONS MAGAZINE & ORDNANCE OPERATIONS FACILITY
CLWS MAGAZINE
WALL SECTIONS – 2

SCALE: NONE
EPROJECT NO.: 1667770
CONSTR. CONTR. NO.
NAVFAC DRAWING NO. 12894266
SHEET 23 OF 77
S-303S

FILE NAME: C:\pw_workdir\dms0033\jorg_hillcat\d1495963\S-303S.dwg LAYOUT NAME: S-303S PLOTTED: Thursday, April 30, 2026 – 8:29pm USER: HIICW

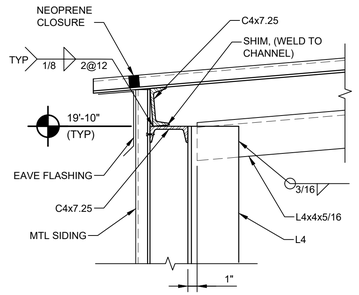

D1 DETAIL
SCALE: 1 1/2" = 1'-0"

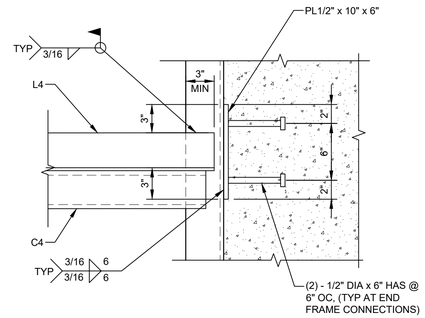

D2 DETAIL
SCALE: 1 1/2" = 1'-0"

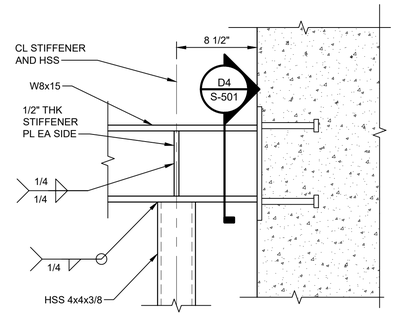

D3 DETAIL
SCALE: 1 1/2" = 1'-0"

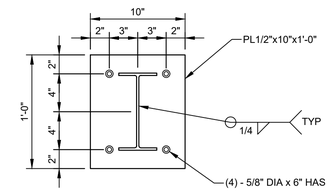

D4 SECTION
SCALE: 1 1/2" = 1'-0"

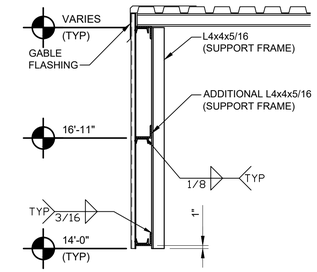

D5 GABLE SECTION
SCALE: 1/2" = 1'-0"

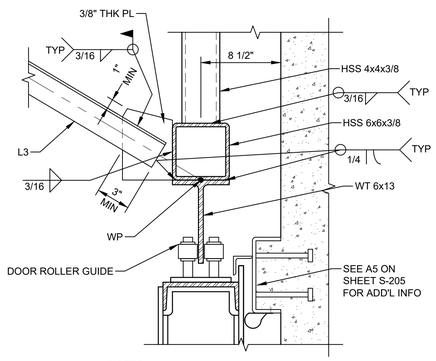

NOTES:
DOOR ROLLER GUIDE MUST HAVE A 9 KIP MINIMUM LATERAL LOAD CAPACITY. WELD DOOR ROLLER GUIDE PER MANUFACTURER'S RECOMMENDATIONS.

B1 ENLARGE DETAIL
SCALE: 1 1/2" = 1'-0"

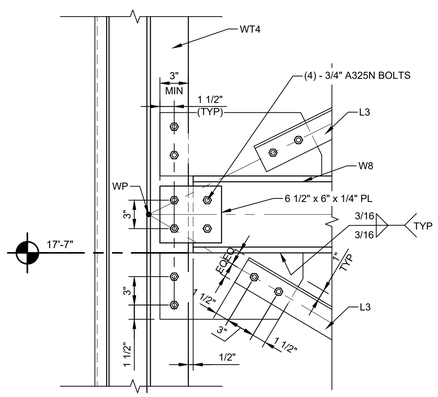

B2 DETAIL
SCALE: 1 1/2" = 1'-0"

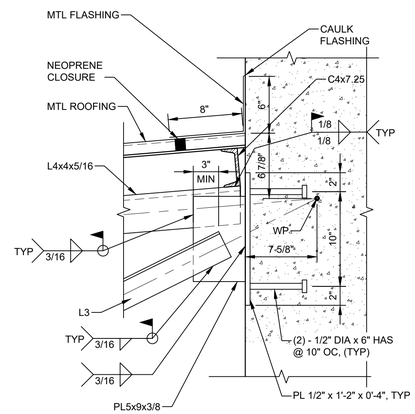

B3 DETAIL
SCALE: 1 1/2" = 1'-0"

THESE DRAWINGS ARE AN EXACT REPLICA OF THE STANDARD MAGAZINE TYPE "CLWS" PROVIDED BY NAVFAC. THE DESIGN WILL BE SITE ADAPTED AND MODIFIED TO MEET THE SPECIFIC GEOTECHNICAL AND LOADING CONDITIONS SPECIFIC TO NAVAL SUBMARINE BASE NEW LONDON, GROTON, CONNECTICUT.

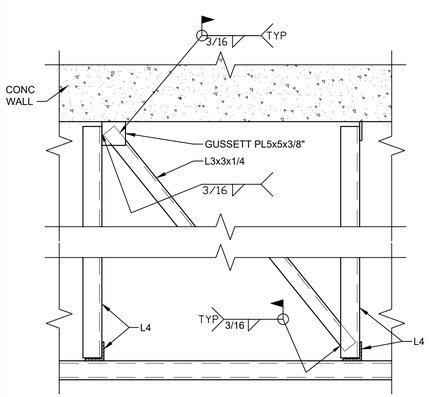

A1 DETAIL
SCALE: 3/4" = 1'-0"

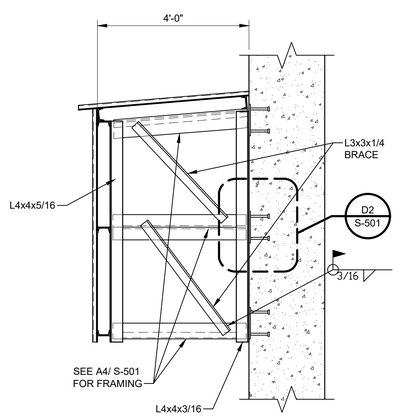

A2 SECTION
SCALE: 1/2" = 1'-0"

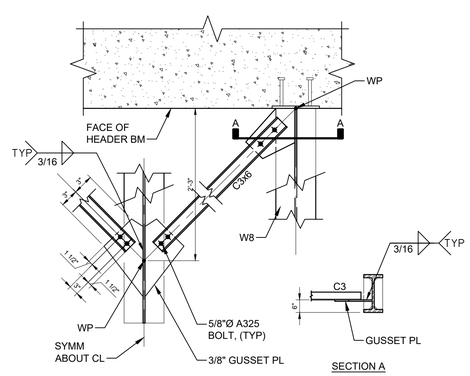

A3 DETAIL
SCALE: 3/4" = 1'-0"

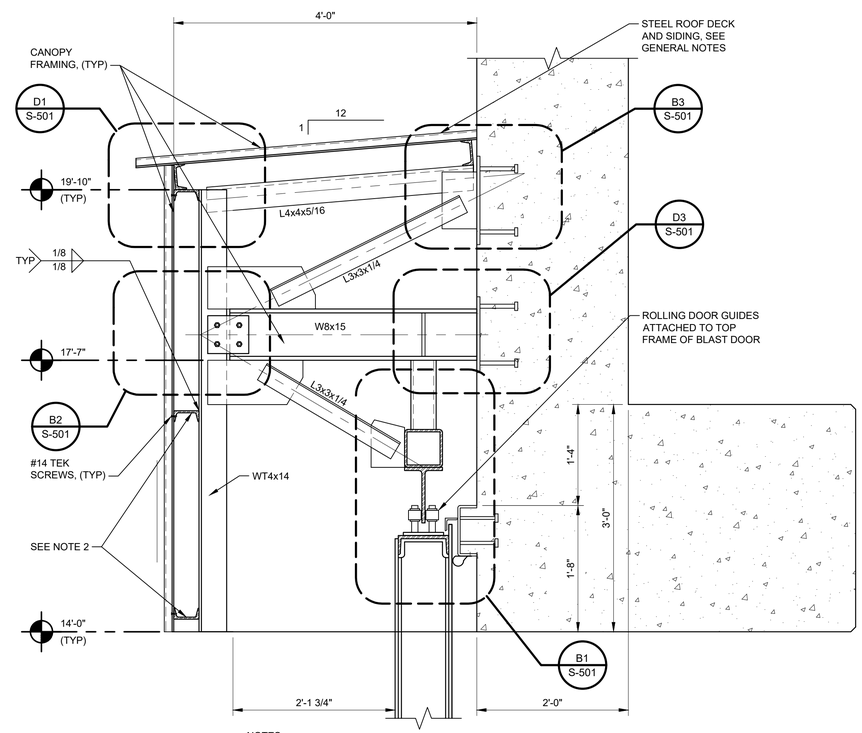

NOTES:
1. ALL ANGLES TO BE L4x4x5/16, UNLESS NOTED OTHERWISE.
2. ALL PURLINS AND GIRTS TO BE C4x7.25.

A4 SECTION
SCALE: 1" = 1'-0"

ORIGINAL STANDARD DRAWING IS NAVFAC DRAWING NUMBER 12877631 SHT 22 OF 51

SYM	DESCRIPTION	DATE	APPR
1	REVISIONS FOR AMENDMENT	4/27/2026	

NAVFAC

SEAL

Jacobs
1100 NORTH GLEBE ROAD
SUITE 500
ARLINGTON, VIRGINIA 22201
571.218.1000
FAX: 571.218.1600

A/E INFO

APPROVED
FOR COMMANDER NAVFAC 5/5/2026

ACTIVITY
APPROVED BY LCDR ELIZABETH OLOKODE NAVFAC NLOD FEAD DIRECTOR NEW LONDON, GROTEN, CT

SATISFACTORY TO DATE 05/27/2025

DES JAF	DRW SFF	CHK TPH	
PM/DM			SMS/CWJ
BRANCH MANAGER			NEK
CHIEF ENG/ARCH			JWJ
FIRE PROTECTION			HPN

DEPARTMENT OF THE NAVY
NAVAL FACILITIES ENGINEERING SYSTEMS COMMAND
MID-ATLANTIC
NAVAL FACILITIES ENGINEERING SYSTEMS COMMAND - MID-ATLANTIC
NAVAL STATION - NORFOLK, VA
NAVAL SUBMARINE BASE NEW LONDON
GROTON, CONNECTICUT
P-1102 WEAPONS MAGAZINE & ORDNANCE OPERATIONS FACILITY
CLWS MAGAZINE
DOOR GUIDE AND CANOPY DETAILS

SCALE: NONE
EPROJECT NO.: 1667770
CONSTR. CONTR. NO.
NAVFAC DRAWING NO.
12894272
SHEET 29 OF 77
S-501

FILE NAME: C:\pw_workdir\den0033\jeg_hilcw\d1495963\S-501.dwg LAYOUT NAME: S-501 PLOTTED: Thursday, April 30, 2026 – 8:24pm USER: HILCW

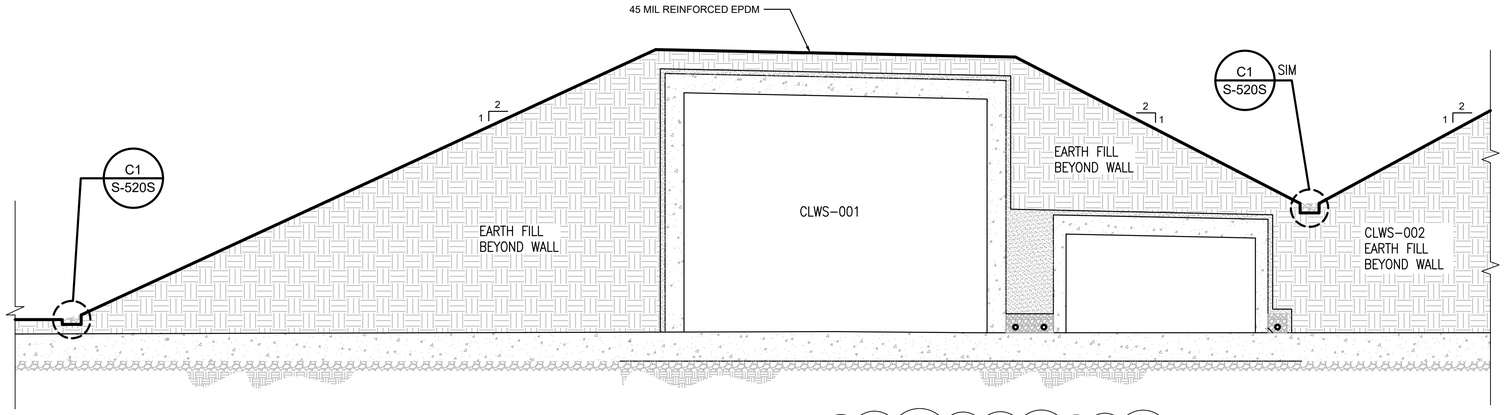

NOTE: MECHANICAL ROOM INSULATION NOT SHOWN FOR CLARITY

C1 ROOF SECTION
SCALE: 1/8" = 1'-0"

0 4' 8' 16'

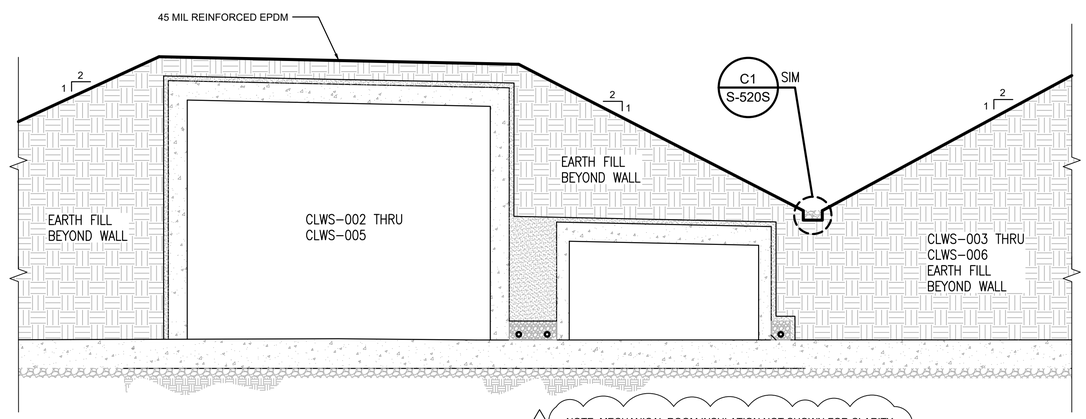

NOTE: MECHANICAL ROOM INSULATION NOT SHOWN FOR CLARITY

B1 ROOF SECTION
SCALE: 1/8" = 1'-0"

0 4' 8' 16'

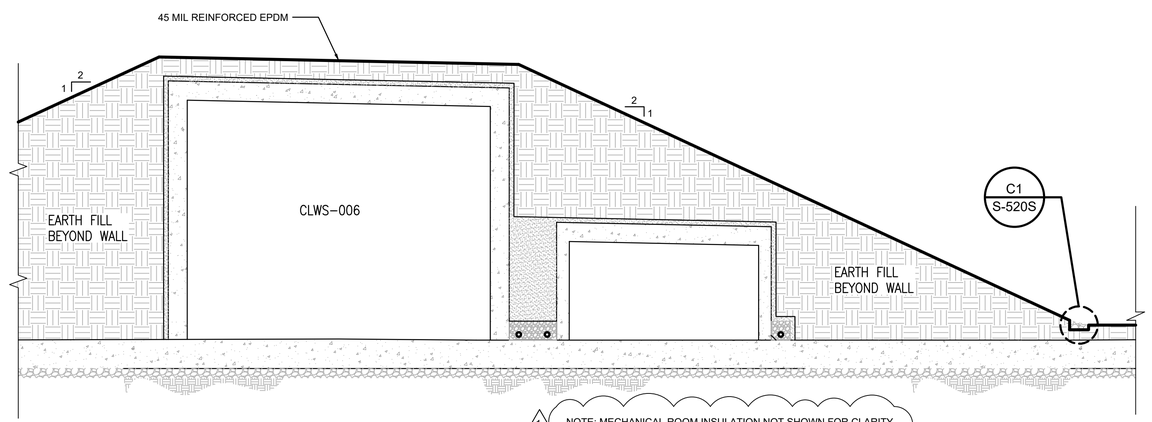

NOTE: MECHANICAL ROOM INSULATION NOT SHOWN FOR CLARITY

A1 ROOF SECTION
SCALE: 1/8" = 1'-0"

0 4' 8' 16'

SYM	DESCRIPTION	DATE	APPR
1	REVISIONS FOR AMENDMENT	4/27/2026	

NAVFAC

LAURA ARICO PRESLEY
REGISTERED ENGINEER
AGRICULTURE
COMMERCE
No. 106367
STATE OF TENNESSEE
04/27/26
SEAL

Jacobs
1100 NORTH GLEBE ROAD
SUITE 500
ARLINGTON, VIRGINIA 22201
571.218.1000
FAX: 571.218.1600
A/E INFO

APPROVED
FOR COMMANDER NAVFAC 5/5/2026
ACTIVITY
APPROVED BY LCDR ELIZABETH OLOKODE NAVFAC NLOD FEAD DIRECTOR NEW LONDON, GROTEN, CT
SATISFACTORY TO DATE 05/27/2025

DES	SB	DRW	JC	CHK	LAP

PM/DM SMS/CWJ
BRANCH MANAGER NEK
CHIEF ENG/ARCH JWJ
FIRE PROTECTION HPN

DEPARTMENT OF THE NAVY
NAVAL FACILITIES ENGINEERING SYSTEMS COMMAND
MID-ATLANTIC
NAVAL FACILITIES ENGINEERING SYSTEMS COMMAND - MID-ATLANTIC
NAVAL STATION - NORFOLK, VA
NAVAL SUBMARINE BASE NEW LONDON
GROTON, CONNECTICUT
P-1102 WEAPONS MAGAZINE & ORDNANCE OPERATIONS FACILITY
CLWS MAGAZINE

EPDM COVER SECTIONS - SITE ADAPTED

SCALE: NONE
EPROJECT NO.: 1667770
CONSTR. CONTR. NO.
NAVFAC DRAWING NO. 12894278
SHEET 35 OF 77

S-521S

FILE NAME: C:\pw_workdir\dms00313\prg_billcar\d1495963\S-521S.dwg LAYOUT NAME: S-521S PLOTTED: Thursday, April 30, 2026 - 8:19pm USER: HIICW