P-1102 WEAPONS MAGAZINE & ORDNANCE OPERATIONS FACILITY

CONTAINERIZED LONG WEAPONS STORAGE (CLWS)

NAVAL SUBMARINE BASE NEW LONDON, GROTON, CONNECTICUT

NAVAL FACILITIES ENGINEERING COMMAND MID-ATLANTIC

NAVFAC FACILITIES ENGINEERING AND ACQUISITION DIVISION (FEAD)

FINAL DESIGN

6/23/2025

VICINITY MAP

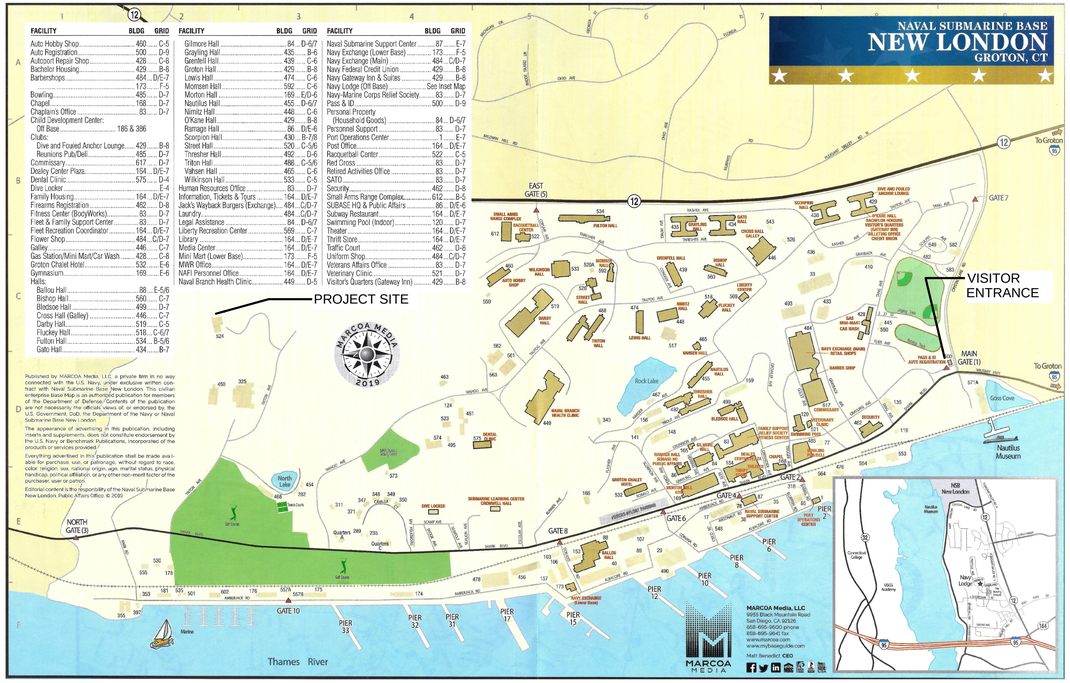

FACILITY	BLDG	GRID
Auto Hobby Shop	460	C-5
Auto Registration	500	D-9
Autoport Repair Shop	428	C-8
Bachelor Housing	429	B-8
Barbershops	484	D/E-7
	173	F-5
Bowling	465	D-7
Chapel	168	D-7
Chaplain's Office	83	D-7
Child Development Center:		
DM Base	186 & 386	
Clubs:		
Dive and Foaled Anchor Lounge	429	B-8
Reunions Pub/Deli	485	D-7
Commissary	617	D-7
Dealey Center Plaza	154	D/E-7
Dental Clinic	575	D-4
Dive Locker		E-4
Family Housing	164	D/E-1
Firearms Registration	462	D-8
Fitness Center (BodyWorks)	83	D-7
Fleet & Family Support Center	83	D-7
Fleet Recreation Coordinator	164	D/E-7
Flower Shop	484	C/D-7
Galley	446	C-7
Gas Station/Mini Mart/Car Wash	428	C-8
Groton Chalet Hotel	532	E-6
Gymnasium	169	E-6
Halls:		
Bailou Hall	88	E-5/6
Bishop Hall	560	C-7
Bledsoe Hall	499	D-7
Cross Hall (Galley)	446	C-7
Darby Hall	519	C-5
Fluckey Hall	518	C-6/7
Fulton Hall	534	B-5/6
Gato Hall	434	B-7
Gilmore Hall	84	D-6/7
Grayling Hall	435	B-6
Greenfell Hall	439	C-6
Groton Hall	429	B-8
Lowis Hall	474	C-6
Mooneen Hall	592	C-6
Morton Hall	169	E/D-6
Nautilus Hall	455	D-6/7
Nimitz Hall	446	C-6
O'Kane Hall	429	B-8
Ramage Hall	86	D/E-6
Scorpion Hall	430	B-7/8
Street Hall	520	C-5/6
Trenchar Hall	492	D-6
Triton Hall	488	C-5/6
Vathsen Hall	465	C-6
Wilkinson Hall	533	C-5
Human Resources Office	83	D-7
Information, Tickets & Tours	164	D/E-7
Jack's Wayback Burgers (Exchange)	484	C/D-7
Laundry	484	C/D-7
Legal Assistance	84	D-6/7
Liberty Recreation Center	569	C-7
Library	164	D/E-7
Media Center	164	D/E-7
Mini Mart (Lower Base)	173	F-5
MWR Office	164	D/E-7
NAFI Personnel Office	164	D/E-7
Naval Branch Health Clinic	449	D-5
Naval Submarine Support Center	87	E-7
Navy Exchange (Lower Base)	173	F-5
Navy Exchange (Main)	484	C/D-7
Navy Federal Credit Union	429	B-8
Navy Gateway Inn & Suites	429	B-8
Navy Lodge (Off Base)	See Inset Map	
Navy-Marine Corps Relief Society	83	D-7
Pass & ID	500	D-9
Personal Property (Household Goods)	84	D-6/7
Personnel Support	83	D-7
Port Operations Center	1	E-7
Post Office	164	D/E-7
Racquetball Center	522	C-5
Red Cross	83	D-7
Retired Activities Office	83	D-7
SATO	83	D-7
Security	462	D-8
Small Arms Range Complex	612	B-5
SUBASE HQ & Public Affairs	86	D/E-6
Subway Restaurant	164	D/E-7
Swimming Pool (Indoor)	120	D-7
Theater	164	D/E-7
Thrift Store	164	D/E-7
Traffic Court	462	D-8
Uniform Shop	484	C/D-7
Veterans Affairs Office	83	D-7
Veterinary Clinic	521	D-7
Visitor's Quarters (Gateway Inn)	429	B-8

Published by MARCOA Media, LLC, a private firm in no way connected with the U.S. Navy, under exclusive written contract with Naval Submarine Base New London. This civilian enterprise Base Map is an authorized publication for members of the U.S. Armed Forces, their families, and civilians. Contents are not necessarily the official views of, or endorsed by, the U.S. Government, DoD, the Department of the Navy or Naval Submarine Base New London.

The appearance of advertising in this publication, including inserts and supplements, does not constitute endorsement by the U.S. Navy or Benchmark Publications, incorporated of the products or services provided.

Everything advertised in this publication shall be made available for purchase, use, or patronage, without regard to race, color, religion, sex, national origin, age, marital status, physical handicap, political affiliation, or any other non-merit factor of the purchaser, user or patron.

Editorial content is the responsibility of the Naval Submarine Base New London, Public Affairs Office. © 2020

LOCATION MAP

SYM	DESCRIPTION	DATE	APPR

NAVFAC

COMMONWEALTH OF VIRGINIA
PETER SOUKAS
Lic. No. 401017157
6/23/2025
ARCHITECT

Jacobs
1100 NORTH GLEBE ROAD
SUITE 500
ARLINGTON, VIRGINIA 22201
571.218.1000
FAX: 571.218.1600

A/E INFO

APPROVED
FOR COMMANDER NAVFAC 8/14/2025

ACTIVITY
APPROVED BY LCDR ELIZABETH OLOKODE NAVFAC NLON FEAD DIRECTOR NEW LONDON, GROTON, CT

SATISFACTORY TO DATE 05/27/2025

DES	CW	DRW	CW
CHK	SA		
PM/DM	SMS/CWJ		
BRANCH MANAGER	NEK		
CHIEF ENG/ARCH	JWJ		
FIRE PROTECTION	HPN		

DEPARTMENT OF THE NAVY
NAVAL FACILITIES ENGINEERING SYSTEMS COMMAND
MID-ATLANTIC

NAVAL FACILITIES ENGINEERING SYSTEMS COMMAND - MID-ATLANTIC
NAVAL STATION - NORFOLK, VA

NAVAL SUBMARINE BASE NEW LONDON
GROTON, CONNECTICUT
P-1102 WEAPONS MAGAZINE & ORDNANCE OPERATIONS FACILITY
CLWS MAGAZINE

COVER SHEET

SCALE:	AS NOTED
EPROJECT NO.:	1667770
CONSTR. CONTR. NO.	
NAVFAC DRAWING NO.	12894244
SHEET	1 OF 77

G-001

FDZE1628

FILE NAME: C:\pw_workdir\dms003\jmg_mcodcj\d1499515\CLWS-G-001 - COVER SHEET_FINAL.dwg LAYOUT NAME: Layout PLOTTED: Thursday, June 19, 2025 - 11:59am USER: mcodcj

GENERAL PROJECT SYMBOLS

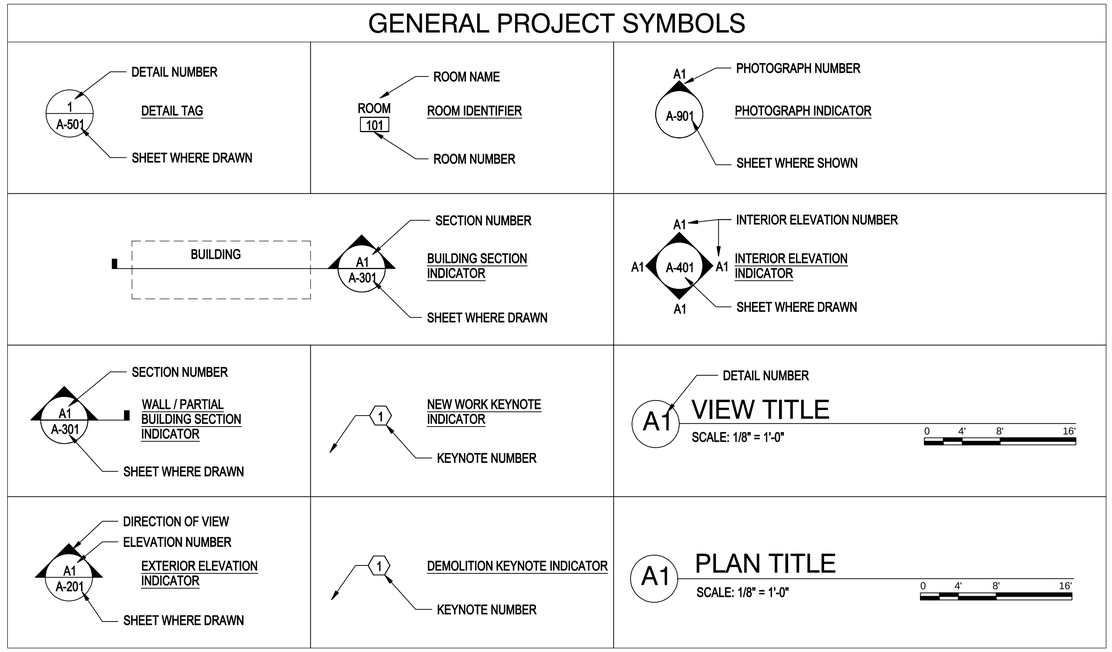

DEPARTMENT OF DEFENSE EXPLOSIVES SAFETY BOARD (DDESB) APPROVAL NOTES

DO NOT REMOVE THESE NOTES WHEN PREPARING CONSTRUCTION DRAWINGS FOR SITE ADAPTION.

1. THIS STANDARD IS APPROVED BY THE DEPARTMENT OF DEFENSE EXPLOSIVE SAFETY BOARD (DDESB) AS A 7-BAR EARTH COVERED MAGAZINE AND MAY BE SITED AS AN EXPOSED SITE MAGAZINE FROM OTHER POTENTIAL EXPLOSION SITES STORING UP TO 500,000 LBS HAZARD DIVISION 1.1 EXPLOSIVES.

2. THE DESIGN AND DETAILING OF THIS STANDARD MAGAZINE FOR BLAST LOADING IS THE SOLE RESPONSIBILITY OF THE GOVERNMENT. THE GOVERNMENT IS THE ENGINEER OF RECORD FOR THE BLAST DOOR.

3. ANY DEVIATION FROM THESE STANDARD DRAWINGS, EXCEPT FOR FOUNDATION MODIFICATIONS, WITHOUT THE WRITTEN APPROVAL FROM THE DEPARTMENT OF DEFENSE EXPLOSIVE SAFETY BOARD (DDESB) MAY REQUIRE THE MAGAZINE TO BE CONSIDERED AN UNDEFINED MAGAZINE AND MAY SEVERELY RESTRICT THE ALLOWABLE STORAGE CAPACITY.

CLWS

SHEET NO. NO.	SHEET NO. SHEET	NAVFAC DWG NO.	SHEET TITLE
GENERAL			
1	G-001	12894244	COVER SHEET
2	G-002	12894245	SHEET INDEX
STRUCTURAL			
3	S-001	12894246	GENERAL NOTES - 1
4	S-002	12894247	GENERAL NOTES - 2
5	S-003	12894248	STANDARD DETAILS
6	S-004S	12894249	GENERAL NOTES - 3
7	S-010S	12894250	OVERALL PLAN - SITE ADAPTED
8	S-011S	12894251	EPDM COVER LAYOUT - SITE ADAPTED
9	S-101S	12894252	FOUNDATION/ FLOOR PLAN
10	S-102	12894253	BRIDGE CRANE AND CANOPY FRAMING PLAN
11	S-103	12894254	ROOF FRAMING PLAN
12	S-104S	12894255	FOUNDATION DRAINAGE PLAN
13	S-201AS	12894256	CLWS-001 BUILDING ELEVATIONS - 1 - SITE ADAPTED
14	S-201BS	12894257	CLWS-002/003/004/005 BUILDING ELEVATIONS - 1 - SITE ADAPTED
15	S-201CS	12894258	CLWS-006 BUILDING ELEVATIONS - 1 - SITE ADAPTED
16	S-202	12894259	BUILDING ELEVATIONS - 2
17	S-203	12894260	RETAINING WALL ELEVATIONS
18	S-204	12894261	FRONT WALL PARTIAL ELEVATIONS
19	S-205	12894262	FRONT WALL PARTIAL ELEVATION AND DETAILS
20	S-206	12894263	BUILDING ELEVATIONS - 3
21	S-301S	12894264	BUILDING SECTIONS
22	S-302S	12894265	WALL SECTIONS - 1
23	S-303S	12894266	WALL SECTIONS - 2
24	S-304S	12894267	WALL SECTIONS - 3
25	S-401	12894268	ENLARGED TRENCH PLAN
26	S-402	12894269	ENLARGED CANOPY FRAMING PLAN
27	S-403	12894270	ENLARGED PLAN VIEW RETAINING WALL
28	S-404S	12894271	ENLARGED PLAN VIEW RETAINING WALL-SITE ADAPTED
29	S-501	12894272	DOOR GUIDE AND CANOPY DETAILS
30	S-502	12894273	PILASTER AND BOUNDARY ELEMENTS REINF DETAILS
31	S-503	12894274	DOOR, TRENCH AND COVER DETAILS
32	S-504	12894275	DOOR STOP, PLOW AND TRENCH COVER ROLLER DETAILS
33	S-505	12894276	SECURITY PILASTER DETAILS
34	S-520S	12894277	EPDM COVER DETAILS - SITE ADAPTED
35	S-521S	12894278	EPDM COVER SECTIONS - SITE ADAPTED
36	S-701	12894279	DOOR ELEVATION, NOTES AND SCHEDULES
37	S-702	12894280	DOOR ELEVATION AND DETAILS
38	S-703	12894281	DOOR DETAILS
39	S-704	12894282	AIR INTAKE SECTIONS AND DETAILS
40	S-705	12894283	VENTILATOR DETAILS, SECTIONS AND ELEVATIONS
41	S-706	12894284	DRAINAGE ISOMETRIC & PENETRATION DETAILS
MECHANICAL			
42	M-001S	12894285	MECHANICAL LEGEND AND GENERAL NOTES
43	M-101S	12894286	MECHANICAL SECTIONS - TYPICAL
44	M-301S	12894287	MECHANICAL SECTIONS - TYPICAL
45	M-401S	12894288	MECHANICAL ENLARGED PLAN - TYPICAL
46	M-501S	12894289	MECHANICAL DETAILS
47	M-601S	12894290	MECHANICAL SCHEDULES
48	M-801S	12894291	MECHANICAL CONTROLS LEGEND
49	M-802S	12894292	MECHANICAL CONTROLS DIAGRAMS & SEQUENCES
50	M-803S	12894293	MECHANICAL CONTROLS DIAGRAMS & SEQUENCES
51	M-804S	12894294	MECHANICAL CONTROLS DIAGRAMS & SEQUENCES
52	M-805S	12894295	MECHANICAL CONTROLS POINTS SCHEDULE
53	M-806S	12894296	MECHANICAL CONTROLS POINTS SCHEDULE
ELECTRICAL			
54	E-001S	12894297	ELECTRICAL SYMBOLS & LEGEND - SITE ADAPTED
55	E-101BS	12894298	ELECTRICAL FLOOR PLAN - SITE ADAPTED
56	EG101BS	12894299	ELECTRICAL GROUNDING PLAN - SITE ADAPTED
57	EG201S	12894300	ELECTRICAL LIGHTNING ZONE PROTECTION ELEVATION - SITE ADAPTED
58	EG202S	12894301	ELECTRICAL LIGHTNING ZONE PROTECTION ELEVATION - SITE ADAPTED
59	E-501S	12894302	ELECTRICAL DETAILS - SITE ADAPTED
60	E-502S	12894303	ELECTRICAL DETAILS - SITE ADAPTED
61	E-503S	12894304	ELECTRICAL DETAILS - SITE ADAPTED
62	E-504S	12894305	ELECTRICAL DETAILS - SITE ADAPTED
63	E-505S	12894306	ELECTRICAL DETAILS - SITE ADAPTED
64	E-506S	12894307	ELECTRICAL DETAILS - SITE ADAPTED
65	E-601S	12894308	ELECTRICAL ONE-LINE – SITE ADAPTED
66	E-602S	12894309	ELECTRICAL SCHEDULES - SITE ADAPTED
67	E-801S	12894310	ELECTRICAL HEAT TRACE PLAN
68	E-802S	12894311	ELECTRICAL HEAT TRACE DETAILS
TELECOMUNICATIONS			
69	T-101AS	12894312	SHEET OMITTED
70	T-101BS	12894313	TELECOMMUNICATION FLOOR PLAN B - SITE ADAPTED
71	T-501	12894314	TELECOMMUNICATION DETAILS
72	T-601S	12894315	TELECOMMUNICATION AND SECURITY RISER DIAGRAM SITE ADAPTED
SECURITY			
73	TY001A	12894316	SECURITY LEGEND, NOTES & ABBREVIATIONS
74	TY101AS	12894317	SHEET OMITTED
75	TY101BS	12894318	SECURITY FLOOR PLAN B - SITE ADAPTED
76	TY501S	12894319	SECURITY DETAILS - SITE ADAPTED
77	TY502	12894320	SHEET OMITTED

SYM	DESCRIPTION	DATE	APPR

NAVFAC

COMMONWEALTH OF VIRGINIA
PETER SOUKAS
Lic. No. 401017157
6/23/2025
ARCHITECT

Jacobs
1100 NORTH GLEBE ROAD
SUITE 500
ARLINGTON, VIRGINIA 22201
571.218.1000
FAX: 571.218.1600

A/E INFO

APPROVED
FOR COMMANDER NAVFAC 6/24/2025

ACTIVITY
APPROVED BY LCDR ELIZABETH OLOKODE NAVFAC NLON FEAD DIRECTOR NEW LONDON, GROTON, CT

SATISFACTORY TO DATE 05/27/2025

DES CW DRW CW CHK SA
PM/DM SMS/CWJ
BRANCH MANAGER NEK
CHIEF ENG/ARCH JWJ
FIRE PROTECTION HPN

DEPARTMENT OF THE NAVY
NAVAL FACILITIES ENGINEERING SYSTEMS COMMAND - MID-ATLANTIC
NAVAL STATION - NORFOLK, VA
NAVAL SUBMARINE BASE NEW LONDON
GROTON, CONNECTICUT
P-1102 WEAPONS MAGAZINE & ORDNANCE OPERATIONS FACILITY
CLWS MAGAZINE
SHEET INDEX

SCALE: AS NOTED
EPROJECT NO.: 1667770
CONSTR. CONTR. NO.
NAVFAC DRAWING NO. 12894245
SHEET 2 OF 77

G-002

FDZE1628

FILE NAME: C:\pw_work\k\dms0313\pg_wrodcj\d14995151\CLWS-G-002 - SHEET INDEX.dwg LAYOUT NAME: G-002 PLOTTED: Monday, June 23, 2025 - 11:28am USER: wrodcj

GENERAL:

1. THESE CONSTRUCTION DOCUMENTS ARE CONSTRUCTION STANDARDS FOR THE NAVY CLWS DOUBLE BAY STANDARD MAGAZINES AND HAVE BEEN SITE ADAPTED BY THE DOR.
2. ALL MATERIALS AND WORKMANSHIP MUST CONFORM TO THE DRAWINGS AND SPECIFICATIONS.
3. EQUIPMENT PENETRATION OPENINGS AND LOCATIONS WHEN INDICATED ON DRAWINGS ARE FOR INFORMATION ONLY AND MUST BE VERIFIED WITH THE APPROPRIATE DRAWING AND/OR EQUIPMENT SUPPLIER BEFORE CONSTRUCTION.
   - A. SEE STRUCTURAL AND ELECTRICAL DRAWINGS FOR SIZE AND LOCATION OF ALL OPENINGS REQUIRED FOR DUCT WORK, PIPES AND PIPE SLEEVES.
   - B. OPENINGS OR POCKETS LARGER THAN 6 INCHES NOT INDICATED IN STRUCTURAL DRAWINGS MUST NOT BE PLACED WITHOUT WRITTEN NOTIFICATION OF THE CONTRACTING OFFICER.
   - C. OPENINGS OR PENETRATIONS OF ANY SIZE IN BLAST-RESISTING STRUCTURAL COMPONENTS (BLAST DOOR, HEADER BEAM, HEADWALL, PILASTERS, ROOF PANEL, SIDE WALLS, REAR WALL) THAT ARE UNPLANNED OR NOT SHOWN IN THE DRAWINGS ARE NOT PERMITTED TO BE CONSTRUCTED WITHOUT PRIOR APPROVAL FROM THE CONTRACTING OFFICER.
4. THE STRUCTURAL DRAWINGS SHOW ONLY THE BASIC STRUCTURAL SYSTEM. REFER TO OTHER DRAWINGS FOR ORNAMENTS, GROOVES, CLIPS, GROUNDS, SLAB DEPRESSIONS, CURBS, EQUIPMENT PADS, PENETRATIONS, NON-BEARING WALLS AND OTHER NON-STRUCTURAL ITEMS.
5. GENERAL NOTES AND STANDARD DETAILS MUST BE USED WHERE APPLICABLE, UNLESS NOTED OTHERWISE. NOTES AND DETAILS ON THE DRAWINGS MUST TAKE PRECEDENCE OVER GENERAL NOTES AND STANDARD DETAILS. WHERE CONFLICTS ARISE BETWEEN DRAWINGS AND SPECIFICATIONS, MOST STRINGENT WILL GOVERN. CONTACT THE CONTRACTING OFFICER IN WRITING FOR CLARIFICATION BEFORE PROCEEDING WITH WORK.
6. ALL OMISSIONS AND/OR CONFLICTS BETWEEN VARIOUS ELEMENTS OF THE CONTRACT DOCUMENTS MUST BE BROUGHT TO THE ATTENTION OF THE CONTRACTING OFFICER IN WRITING BEFORE PROCEEDING WITH ANY WORK INVOLVED.
7. DIMENSIONS MUST NOT BE SCALED FROM THE PLANS, SECTIONS AND/OR DETAILS OF THE STRUCTURAL DRAWINGS.
8. COORDINATE WITH THE CONTRACTING OFFICER FOR PROCUREMENT AND INSTALLATION OF INTERNAL LOCKING DEVICE (ILD), BOLTWORKS, AND THE DISTRIBUTION OF KEY SETS FOR EACH MAGAZINE DOOR. THE ILD MUST BE PROCURED WITH TWO UNIQUE KEYS IN ORDER TO OPERATE THE BOLTWORKS.
9. CONTACT THE DoD LOCK PROGRAM FOR DIRECTIONS ON HOW TO PROCURE THE INTERNAL LOCKING DEVICE (ILD), BOLTWORKS, AND A LIST OF RECOMMENDED MANUFACTURERS FOR MAGAZINE DOORS:
   - A. DoD LOCK PROGRAM: https://navfac.navy.mil/go/locks
   - B. EMAIL: ILD_Field_Support@navy.mil
   - C. ILD SUPPORT HOTLINE: 805-982-5625.
   - D. DoD LOCK PROGRAM TECHNICAL SUPPORT HOTLINE: 800-290-7607 OR 805-982-1212.
10. COORDINATE WITH THE CONTRACTING OFFICER FOR THE CONNECTION OF THE BALANCED MAGNETIC SWITCH (BMS) ON THE DOOR AND THE ILD, WHICH MUST BE INSTALLED AND CONNECTED TO THE INTRUSION DETECTION SYSTEM (IDS) BY NAVY INFORMATION WARFARE CENTER.

DESIGN CRITERIA:

1. THE STRUCTURAL DESIGN AND CONSTRUCTION MUST COMPLY WITH THE FOLLOWING GOVERNMENT STANDARDS:
   - UFC 1-200-01, "DESIGN: GENERAL BUILDING REQUIREMENTS"
   - FC 1-300-09N, "NAVY AND MARINE CORPS DESIGN PROCEDURES"
2. DESIGN LOADS:
   THE FOLLOWING LOADS WERE USED AS BASIS OF DESIGN:
   - A. DEAD LOADS: ACTUAL WEIGHT
     - a. SOIL: 110 PCF
   - B. LIVE LOADS:
     - a. CANOPY ROOF: 20 PSF
     - b. ROOF: 100 PSF
     - c. MAGAZINE FLOOR: 32K (HS 20-44 AXLE)
       70.5K (SIDELOADER AXLE)
       15K (FORKLIFT AXLE)
       31K (CPS CONTAINER EACH)
       2,000 PSF (UNIFORM)
     - d. MECHANICAL ROOM FLOOR: 150 PSF (UNIFORM)
3. WIND DESIGN DATA:
   - A. DESIGN WIND SPEED: 210 MPH
   - B. EXPOSURE: "C"
   - C. RISK CATEGORY: III
4. SEISMIC DESIGN DATA:
   - A. RISK CATEGORY: III
   - B. IMPORTANCE FACTOR: 1.25
   - C. SEISMIC DESIGN CATEGORY: D
   - D. SITE SEISMICITY: $S_S = 2.79g$, $S_1 = 0.68g$
   - E. SITE CLASS: D
5. SNOW DESIGN DATA:
   - A. GROUND SNOW LOAD: 45
   - B. EXPOSURE FACTOR: 1.0 PSF
   - C. IMPORTANCE FACTOR: 1.10
   - D. THERMAL FACTOR: 1.2
6. EXPLOSIVE SAFETY DESIGN LOADS:
   - A. EXPLOSIVE SAFETY DESIGN LOADS FOR DOOR AND ROOF OF MAGAZINES ARE PRESCRIBED BY NAVFAC EXWC. DESIGN GUIDANCE IS PROVIDED BY UFC 3-340-02 2008.
   - B. TRIANGULAR PULSE LOAD VALUES BASED ON NAVFAC EXWC - DESIGNED CRITERIA: CONTAINERIZED LONG WEAPONS STORAGE EARTH COVERED MAGAZINES, DATED NOVEMBER 2019:

MEMBER	PEAK PRESSURE	IMPULSE	DURATION
HEAD WALL AND DOOR	301 PSI	2,119 PSI-MS	14.08 MS ROOF
	176.3 PSI	1,640 PSI-MS	18.60 MS

   - C. APPROVED LOCATION AND STORAGE CAPACITY OF EACH ECM MUST BE DETERMINED BY THE SAFETY OFFICER BASED ON ORIENTATION AND PROXIMITY RELATIVE TO NEARBY FACILITIES/MAGAZINES.

CONSTRUCTION PROCEDURES & SAFETY REQUIREMENTS:

1. THE CONTRACT STRUCTURAL DRAWINGS REPRESENT THE FINISHED STRUCTURE. THEY DO NOT INDICATE THE MEANS OR METHOD OF CONSTRUCTION. PROVIDE ALL MEASURES NECESSARY TO PROTECT THE STRUCTURE, WORKERS OR OTHER PERSONS DURING CONSTRUCTION. SUCH MEASURES MUST INCLUDE, BUT NOT BE LIMITED TO, BRACING, SHORING FOR CONSTRUCTION EQUIPMENT, SHORING FOR THE BUILDING, FORMS, SCAFFOLDING, PLANKING, SAFETY NETS, ETC.
2. THE CONTRACTOR MUST ENGAGE PROPERLY QUALIFIED PERSONS TO DETERMINE WHERE AND HOW TEMPORARY PRECAUTIONARY MEASURES MUST BE USED DURING CONSTRUCTION. THE CONTRACTOR MUST ALSO PROVIDE THEIR OWN THIRD-PARTY INSPECTOR TO REVIEW AND VERIFY INSTALLATION OF ALL TEMPORARY PRECAUTIONARY MEASURES
3. THE CONTRACTOR MUST SUPERVISE AND DIRECT THE WORK SO AS TO MAINTAIN RESPONSIBILITY FOR COORDINATING THE WORK OF ALL TRADES AND THE CHECKING OF ALL DIMENSIONS. ALL DISCREPANCIES MUST BE CALLED TO THE ATTENTION OF THE CONTRACTING OFFICER AND MUST BE RESOLVED BEFORE PROCEEDING WITH THE WORK.
4. THE CONTRACTOR MUST COMPLY WITH ALL APPLICABLE CITY, COUNTY, STATE, FEDERAL, AND INTERNATIONAL LAWS, INCLUDING THE OCCUPATIONAL SAFETY AND HEALTH ACT (OSHA) AND REGULATIONS ADOPTED PURSUANT THERETO.
5. CONSTRUCTION LOADS INCLUDING MATERIALS MUST NOT EXCEED THE DESIGN LIVE LOAD. PROVIDE ADEQUATE SHORING, RESHORING AND/OR BRACING WHERE REQUIRED.

FOUNDATIONS:

1. THE FOUNDATIONS HAVE BEEN DESIGNED USING THE FOLLOWING ALLOWABLE BEARING PRESSURES:
   - A. DEAD PLUS LIVE LOAD: 4,000 PSF
   - B. TOTAL DESIGN LOAD (INCLUDING WIND OR SEISMIC, TRANSIENT LOAD FACTOR = 1.33): 5,300 PSF
   - C. BLAST DESIGN LOAD (DYNAMIC INCREASE FACTOR = 2.5): 10,000 PSF
2. EARTH COVER MATERIAL TO BE USED AS MAGAZINE COVER AND WITHIN THE EMBANKMENT IS TO BE NON-EXPANSIVE, FREE OF DELETERIOUS MATERIAL AND MEET THE FOLLOWING CHARACTERISTICS:
   - A. ALLOWABLE WET SOIL DENSITY: 110 - 120 PCF.
   - B. ASTM D2487 CLASSIFICATION: SM, SM-SC, SC.
   - C. ASTM D1140 MATERIAL FINER THAN #200 SIEVE (0.075MM) -MIN. 25%: MAX. 50%.
   - D. MAXIMUM PARTICLE SIZE: 1 INCH
   - E. ASTM D4318: MAX LIQUID LIMIT = 35, MAX PLASTICITY INDEX = 12.
   - F. REQUIREMENTS FOR EARTH COVER ECMS IN ACCORDANCE WITH DEFENSE EXPLOSIVES SAFETY REGULATION (DESR) 6055.09.
3. RETAINING WALLS HAVE BEEN DESIGNED USING THE FOLLOWING CRITERIA.
   - A. PASSIVE EQUIVALENT FLUID PRESSURE: 300 PSF/FT
   - B. AT-REST LATERAL PRESSURE w/ 2:1 BACKFILL (RESTRAINED):
     - WITHOUT SEISMIC: 32 PSF/ FT
     - WITH SEISMIC: 68 PSF/ FT
   - C. CANTILEVERED WALL LATERAL PRESSURE (UNRESTRAINED):
     - WITHOUT SEISMIC: 40 PSF/ FT
     - WITH SEISMIC: 102 PSF/ FT
   - D. FRICTION FACTOR BETWEEN SOIL AND CONCRETE PLACED AGAINST SOIL: 0.35
   - E. FRICTION FACTOR BETWEEN SOIL AND CONCRETE PLACED AGAINST FORMWORK: 0.25
   - F. MINIMUM SOIL COHESIVE STRENGTH: 500 PSF
4. SAND MATERIAL USED AS A FREE-DRAINING LAYER AT THE EXTERIOR CONCRETE SURFACES AT THE ROOF PANEL, ENDWALL, AND SIDEWALLS MUST MEET MINIMUM REQUIREMENTS FOR ECMS IN ACCORDANCE WITH DEFENSE EXPLOSIVES SAFETY REGULATION (DESR) 6055.09.
5. STRUCTURAL DRAWINGS INDICATE GENERAL SOG AND FOUNDATION PREPARATION. SEE PROJECT SPECIFICATIONS FOR SPECIFIC REQUIREMENTS.
6. ALL FILLING, BACKFILLING AND COMPACTING MUST BE PER PROJECT SPECIFICATION. COMPACTION OF SOILS ON TOP OF MAGAZINE MUST BE PERFORMED WITH HAND COMPACTION TOOLS ONLY.
7. EXPANSIVE SOILS MUST NOT BE USED FOR BACKFILL OR FILL. BACKFILL AT RETAINING WALLS MUST CONFORM TO THE PROJECT SPECIFICATIONS.
8. ALL EXCAVATIONS MUST BE PROPERLY BACKFILLED. DO NOT PLACE BACKFILL BEHIND RETAINING WALLS BEFORE CONCRETE HAS ATTAINED FULL DESIGN STRENGTH. CONTRACTOR MUST BRACE OR PROTECT ALL BUILDING AND PIT WALLS BELOW GRADE FROM LATERAL LOADS UNTIL ATTACHING FLOORS ARE COMPLETELY IN PLACE AND HAVE ATTAINED FULL STRENGTH. CONTRACTOR MUST PROVIDE FOR DESIGN, PERMITS AND INSTALLATION OF SUCH BRACING.
9. CONTRACTOR MUST PROVIDE FOR DE-WATERING OF EXCAVATIONS FROM SURFACE WATER, GROUND WATER AND SEEPAGE.
10. CONTRACTOR MUST PROVIDE FOR DESIGN AND INSTALLATION OF ALL CRIBBING, SHEETING, AND SHORING REQUIRED TO SAFELY RETAIN THE EARTH BANKS.
11. EXCAVATION FOR FOUNDATIONS MUST BE APPROVED BY THE CONTRACTING OFFICER PRIOR TO PLACING THE REINFORCING AND CONCRETE.
12. SHALLOW FOOTING FOUNDATIONS MUST BE PLACED AND INSTALLED IN ACCORDANCE WITH THE CONSTRUCTION DRAWINGS AND SPECIFICATIONS PREPARED FOR THE PROJECT.
13. FOUNDATION BACKFILL AND UTILITY TRENCH BACKFILL WITHIN BUILDING AREA MUST BE MECHANICALLY COMPACTED IN LAYERS PER THE SPECIFICATIONS TO THE APPROVAL OF THE CONTRACTING OFFICER. FLOODING WILL NOT BE PERMITTED.
14. NEW FOUNDATIONS MUST BEAR ON APPROVED, UNDISTURBED, NATURAL SUBGRADE SOILS OR ON PROPERLY COMPACTED AND APPROVED FILL MATERIALS PLACED DIRECTLY ABOVE APPROVED SUBGRADES AS INDICATED IN CONSTRUCTION DRAWINGS AND SPECIFICATIONS.

CAST-IN-PLACE CONCRETE:

1. THE DESIGN AND CONSTRUCTION OF REINFORCED CONCRETE MUST CONFORM TO THE ACI BUILDING CODE (ACI 318) AND THE FOLLOWING CODES AND STANDARD SPECIFICATIONS:
   - A. CONCRETE MIXING ASTM C94
   - B. CONCRETE PLACEMENT ASTM C304
2. MATERIAL MUST CONFORM TO ALL OF THE FOLLOWING STANDARD SPECIFICATIONS, LATEST EDITION:
   - A. PORTLAND CEMENT ASTM C150, TYPE I OR II
   - B. CONCRETE AGGREGATES ASTM C33
   - C. REINFORCING STEEL ASTM A615 DEFORMED BARS (GRADE 60)
     ASTM A706 GRADE 60 IS NOT EQUIVALENT AND IS NOT ACCEPTABLE.
   - D. WELDED WIRE FABRIC (SHEET TYPE, ROLL TYPE NOT ACCEPTABLE) ASTM A1064
3. CONCRETE MUST ATTAIN THE FOLLOWING 28-DAY COMPRESSIVE STRENGTHS, UNLESS OTHERWISE INDICATED;
   - A. ALL STRUCTURAL CONCRETE: 5,000 PSI
   - B. LEAN CONCRETE: 3,000 PSI
4. CHLORIDES OR CHLORIDE SALTS ARE NOT ALLOWED IN THE CONCRETE MIXES.
5. ALL REINFORCING STEEL DETAILING AND PLACEMENT MUST CONFORM TO THE ACI DETAILING MANUAL PUBLICATION SP-66, "BUILDING CODE REQUIREMENTS FOR REINFORCED CONCRETE" ACI-318, AND THE "MANUAL OF STANDARD PRACTICE FOR DETAILING REINFORCED CONCRETE STRUCTURES" ACI-315. PROVIDE ADEQUATE BOLSTERS, HI-CHAIRS, SUPPORT BARS, ETC., TO MAINTAIN SPECIFIED COVER FOR THE ENTIRE LENGTH OF ALL REINFORCING. SECURE ALL REINFORCING BARS, ANCHOR BOLTS AND OTHER CONCRETE INSERTS IN POSITION PRIOR TO PLACING CONCRETE.
6. WELDING OF REINFORCING STEEL IS PROHIBITED.
7. MINIMUM CONCRETE PROTECTION (COVER) FOR REINFORCEMENT MUST BE PROVIDED AS FOLLOWS UNLESS SPECIFICALLY CALLED OUT OTHERWISE IN PLANS AND DETAILS:
   - A. CONCRETE PLACED AGAINST EARTH. 3 INCH
   - B. CONCRETE PLACED AGAINST FORM AND LATER EXPOSED TO EARTH OR WEATHER. 2 INCH
   - C. COLUMNS AND BEAMS (FROM TIE OR STIRRUP). 2 INCH
   - D. SLAB EXPOSED TO WEATHER OR GROUND. 2 INCH
   - E. SLABS AND WALLS (NOT EXPOSED TO WEATHER OR GROUND). 3/4 INCH
8. PROJECTING CORNERS OF BEAMS, WALLS, COLUMNS, ETC., MUST BE FORMED WITH 3/4 INCH CHAMFER, UNLESS OTHERWISE NOTED.
9. PROVIDE SLEEVES FOR ELECTRICAL OPENINGS IN CONCRETE BEFORE PLACING. DO NOT CUT ANY REINFORCING WHICH MAY CONFLICT. CORING IN CONCRETE IS NOT PERMITTED EXCEPT AS SHOWN. NOTIFY THE STRUCTURAL ENGINEER AND CONTRACTING OFFICER IN ADVANCE IF THE FIELD CONDITIONS DO NOT REFLECT THE CONDITIONS SHOWN ON THE DRAWINGS.
10. CONDUIT OR PIPE SIZE (O.D.) MUST NOT EXCEED 30 PERCENT OF SLAB THICKNESS AND MUST BE PLACED BETWEEN THE TOP AND BOTTOM REINFORCING UNLESS SPECIFICALLY DETAILED OTHERWISE. CONCENTRATIONS OF CONDUITS OR PIPES MUST BE AVOIDED EXCEPT WHERE DETAILED OPENINGS ARE PROVIDED.
11. ALL ROUGHENED SURFACES IN CONCRETE MUST BE MADE WITH A MINIMUM AMPLITUDE OF 1/4 INCH.
12. SEE SHEET S-002 FOR LIGHTWEIGHT CONCRETE MIX DESIGN FOR HIGH SECURITY MAGAZINE DOOR.

STRUCTURAL STEEL:

1. DETAIL, FABRICATE, AND ERECT STRUCTURAL STEEL IN ACCORDANCE WITH THE "AISC SPECIFICATION FOR THE DESIGN, FABRICATION AND ERECTION OF STRUCTURAL STEEL FOR BUILDINGS," LATEST EDITION.
2. CONTRACTOR MUST REVIEW AND APPROVE STRUCTURAL STEEL SHOP DRAWINGS PRIOR TO SUBMITTAL TO THE CONTRACTING OFFICER. DO NOT BEGIN FABRICATION PRIOR TO THE COMPLETION OF THE SHOP DRAWING REVIEW PROCESS.
3. FURNISH STRUCTURAL STEEL THAT IS NEW, CLEAN, STRAIGHT, AND CONFORMING TO THE FOLLOWING STANDARD SPECIFICATION, LATEST EDITION:
   - A. STRUCTURAL STEEL WIDE FLANGE: ASTM A992
   - B. STRUCTURAL STEEL CHANNELS, ANGLES, S-SHAPES, AND PLATES: ASTM A992 OR ASTM A572, GRADE 50
   - C. HOLLOW STRUCTURAL STEEL SECTIONS: ASTM A500, GRADE C
   - D. ANCHOR BOLTS: ASTM F1554 (GRADE SPECIFIED AS REQUIRED)
   - E. HIGH STRENGTH BOLTS: ASTM F3125 GRADE A325
   - F. HEADED STUD ANCHORS: ASTM A29 (TYPE B)
   - G. SUBSTITUTIONS OF STEEL SHAPES IS NOT PERMITTED.
4. STRUCTURAL STEEL MUST CONFORM TO THE FOLLOWING PROPERTIES OR COATINGS:
   - A. ALL WELDMENT AND EMBEDMENTS FABRICATED FOR THE DOOR JAMB, HEAD, LOCKING PILASTER, AND TRENCH MUST BE MADE OF TYPE 304 STAINLESS STEEL PER ASTM A240.
   - B. ALL DOOR STRUCTURAL STEEL MUST BE PRIMED AND PAINTED AFTER FABRICATION. REFER TO DOOR COATINGS NOTES ON S-003.
   - C. ALL OTHER STRUCTURAL STEEL INCLUDING CANOPY FRAMING MUST BE HOT DIP GALVANIZED PER ASTM A123 AND COATED A MINIMUM DRY FILM THICKNESS (DFT) OF 12 MILS IN ACCORDANCE WITH THE FOLLOWING REQUIREMENTS:
     - a. PRIMER COAT: SOLVENT-BASED TWO COMPONENT EPOXY ANTI-CORROSIVE PRIMER (3-5 MILS), MPI (THE MASTER PAINTERS INSTITUTE) #101.
     - b. INTERMEDIATE COAT: HIGH SOLIDS EPOXY COATING (3-5 MILS). MPI #108.
     - c. TOP COAT: HIGH SOLIDS POLYURETHANE COATING (3-5 MILS). MPI #72.
   - D. GALVANIZE STRUCTURAL STEEL AFTER FABRICATION WHERE PRACTICAL. REPAIR DAMAGED GALVANIZED COATING USING ASTM A780 ZINC-RICH PAINT. FIELD CUTTING OF ANY HOT-DIP GALVANIZED HARDWARE IS NOT PERMITTED.
5. REPAIR ABRADED AND RUSTED SHOP PAINT WITH SAME PAINT AS SPECIFIED IN STRUCTURAL STEEL NOTE 4C.
6. WELDING MUST COMPLY WITH THE "STRUCTURAL WELDING CODE - STEEL" (AWS D1.1) AND THE "STRUCTURAL WELDING CODE - STAINLESS STEEL" (AWS D1.6). WELD ELECTRODES MUST BE E70XX FOR STEEL AND E308L FOR STAINLESS STEEL. PASSIVATION OF STAINLESS STEEL WELDS MUST BE PERFORMED PER ASTM A380. UNLESS OTHERWISE NOTED, MINIMUM WELD SIZE MUST BE 1/4 INCH CONTINUOUS FILLET WELD.

STRUCTURAL STEEL (CONT):

7. UNLESS OTHERWISE NOTED WELD ALL SHOP CONNECTIONS AND BOLT ALL FIELD CONNECTIONS. THE FABRICATOR IS RESPONSIBLE FOR THE DESIGN OF ALL CONNECTIONS, UNLESS OTHERWISE DETAILED.
8. DO NOT CUT OR BURN HOLES IN STRUCTURAL STEEL WITHOUT THE APPROVAL OF THE CONTRACTING OFFICER.
9. SPLICING OF STRUCTURAL STEEL IS NOT PERMITTED UNLESS APPROVED IN WRITING BY THE CONTRACTING OFFICER.
10. GROUT BELOW BASE PLATES WITH NON-SHRINK GROUT WITH COMPRESSIVE STRENGTH, f'c = 5,000 PSI.
11. COAT ALL STRUCTURAL STEEL EXPOSED TO SOIL WITH TWO COATS OF COAL TAR EPOXY. EPOXY MUST MEET THE REQUIREMENTS OF PAINT SPECIFIC SSPC-PAINT 16.
12. BLAST DOOR AND COMPONENTS MUST MEET THE FOLLOWING TOLERANCES.
   - A. BLAST DOOR MUST HAVE A TOTAL MAX FLATNESS TOLERANCE OF ±1/4" VERTICALLY AND HORIZONTALLY.
   - B. TRENCHES AND DOOR GUIDE RAIL MUST HAVE A ±1/4" MAX DIFFERENTIAL TOLERANCE PER EVERY 37'-0".
   - C. SECURITY PILASTER AND ALL OTHER VERTICAL AND HORIZONTAL DOOR BEARING SURFACES MUST HAVE A ±1/4" MAX TOTAL TOLERANCE.

STRUCTURAL ABBREVIATIONS:

AB	ANCHOR BOLT	INTERM	INTERMEDIATE
ADD'L	ADDITIONAL	JT	JOINT
AFG	ABOVE FINISHED GRADE	LLH	LONG LEG HORIZONTAL
ALT	ALTERNATE	LLV	LONG LEG VERTICAL
APPROX	APPROXIMATE	LONGIT	LONGITUDINAL
ARCH	ARCHITECTURAL	MAX	MAXIMUM
BM	BEAM	MECH	MECHANICAL
BOT	BOTTOM	MANUF, MFR	MANUFACTURER
CI	CAST IRON	MIN	MINIMUM
CIP	CAST-IN-PLACE	MISC	MISCELLANEOUS
CJ	CONSTRUCTION JOINT	NIC	NOT IN CONTRACT
CLJ	CONTROL JOINT	NS	NEAR SIDE
CLR	CLEAR (ANCE)	NTS	NOT TO SCALE
COL	COLUMN	OC	ON CENTER
CONC	CONCRETE	OF	OUTSIDE FACE
CONN	CONNECTION	OH	OPPOSITE HAND
CJP	COMPLETE JOINT PENETRATION	OPNG	OPENING
CONSTR	CONSTRUCTION	PJ	PANEL JOINT
CONT	CONTINUOUS	PCJ	PARTIAL CONTROL JOINT
DBA	DEFORMED BAR ANCHOR	PL	PLATE
DBL	DOUBLE	PN	PART NUMBER
DET	DETAIL	RAD	RADIUS
DIA	DIAMETER	REINF	REINFORCEMENT
DIM	DIMENSION	REQ'D	REQUIRED
DIST	DISTANCE	SCHED	SCHEDULE
DWG	DRAWING	SECT	SECTION
EA	EACH	SHT	SHEET
EF	EACH FACE	SIM	SIMILAR
EJ	EXPANSION JOINT	SOG	SLAB-ON-GRADE
EQ	EQUAL	SPA	SPACE
ES	EACH SIDE	SPECS	SPECIFICATIONS
EXT	EXTERIOR	SQ	SQUARE
FDN	FOUNDATION	SS	STAINLESS STEEL
FL	FLOOR	STD	STANDARD
FIN	FINISH	STIFF	STIFFENER
FIN FL	FINISH FLOOR	STRUCT	STRUCTURAL
FS	FAR SIDE	T	TOP
FT	FOOT OR FEET	TBD	TO BE DETERMINED
FTG	FOOTING	TEMP	TEMPERATURE STEEL
GA	GAUGE	THK	THICK
GI	GALVANIZED IRON	THRU	THROUGH
HAS	HEADED ANCHOR STUD	TOS	TOP OF SLAB, TOP OF STEEL
HORIZ, (H)	HORIZONTAL	TYP	TYPICAL
HSS	HOLLOW STRUCTURAL SECTION	UNO	UNLESS NOTED OTHERWISE
IF	INSIDE FACE	VERT, (V)	VERTICAL
INFO	INFORMATION	W/	WITH

THESE DRAWINGS ARE AN EXACT REPLICA OF THE STANDARD MAGAZINE TYPE "CLWS" PROVIDED BY NAVFAC. THE DESIGN WILL BE SITE ADAPTED AND MODIFIED TO MEET THE SPECIFIC GEOTECHNICAL AND LOADING CONDITIONS SPECIFIC TO NAVAL SUBMARINE BASE NEW LONDON, GROTON, CONNECTICUT.

ORIGINAL STANDARD DRAWING IS NAVFAC DRAWING NUMBER 12877611 SHT 2 OF 51

SYM	DESCRIPTION	DATE	APPR

NAVFAC

SEAL

Jacobs
1100 NORTH GLEBE ROAD
SUITE 500
ARLINGTON, VIRGINIA 22201
571.218.1000
FAX: 571.218.1600

A/E INFO

APPROVED
FOR COMMANDER NAVFAC 8/14/2025

ACTIVITY
APPROVED BY LCDR ELIZABETH OLOKODE NAVFAC NLON FEAD DIRECTOR NEW LONDON, GROTON, CT

SATISFACTORY TO DATE 05/27/2025

DES JAF DRW SFF CHK TPH
PM/DM SMS/CWJ
BRANCH MANAGER NEK
CHIEF ENG/ARCH JWJ
FIRE PROTECTION HPN

DEPARTMENT OF THE NAVY
NAVAL FACILITIES ENGINEERING SYSTEMS COMMAND
MID-ATLANTIC

NAVAL FACILITIES ENGINEERING SYSTEMS COMMAND - MID-ATLANTIC
NAVAL STATION - NORFOLK, VA

NAVAL SUBMARINE BASE NEW LONDON
GROTON, CONNECTICUT
P-1102 WEAPONS MAGAZINE & ORDNANCE OPERATIONS FACILITY
CLWS MAGAZINE

GENERAL NOTES - 1

SCALE: NONE
EPROJECT NO.: 1667770
CONSTR. CONTR. NO.
NAVFAC DRAWING NO. 12894246
SHEET 3 OF 77
S-001

FILE NAME: C:\pw_work\dr\jaw003\pc2mhil_09050107\d1495963\S-001.dwg LAYOUT NAME: S-001 PLOTTED: Friday, June 13, 2025 - 9:11am USER: 09050107

SPECIAL INSPECTION SCHEDULE/ VERIFICATION

ITEM	EXTENT OF INSPECTION[1]	REFERENCE	COMMENT/ SCOPE
CONCRETE CONSTRUCTION			
REINFORCING STEEL PLACEMENT	P	ACI 318: 26.6.2	INSPECT SIZE, SPACING, COVER, POSITIONING AND GRADE OF REINFORCING STEEL. VERIFY THAT REINFORCING BARS ARE FREE OF FORM OIL OR OTHER DELETERIOUS MATERIALS. INSPECT BAR LAPS AND MECHANICAL SPLICES. VERIFY THAT BARS ARE ADEQUATELY TIED AND SUPPORTED ON CHAIRS OR BOLSTERS. WELDING OF REINFORCEMENT IN STRUCTURAL CONCRETE IS NOT ALLOWED WITHOUT APPROVAL
CONCRETE PLACEMENT	C	AC1 318: 26.5.2	INSPECT PLACEMENT OF CONCRETE. VERIFY THAT CONCRETE CONVEYANCE AND DEPOSITING AVOIDS SEGREGATION OR CONTAMINATION. VERIFY THAT CONCRETE IS PROPERLY CONSOLIDATED.
SAMPLING AND TESTING OF CONCRETE	C	ASTM C 172 ASTM C 31 ACI 318: 26.12	TEST CONCRETE COMPRESSIVE STRENGTH, SLUMP, AIR-CONTENT AND TEMPERATURE
CURING AND PROTECTION	P	ACI 318: 26.5.3-26.5.5	INSPECT CURING, COLD WEATHER PROTECTIONS AND HOT WEATHER PROTECTION PROCEDURES.
FORMWORK	P	ACI 318: 26.11	INSPECT FLATWORK FOR SHAPE, LOCATION AND DIMENSIONS OF THE CONCRETE MEMBER BEING FORMED.
DOOR CONSTRUCTION			
FABRICATOR CERTIFICATION/ QUALITY CONTROL PROCEDURES	S		REVIEW OF FABRICATOR'S QUALITY CONTROL PROCEDURES OR AISC CERTIFICATION.
FABRICATION INSPECTION	P		INSPECT IN-PLACE FABRICATION, OR REVIEW FABRICATOR'S APPROVED INDEPENDENT INSPECTION AGENCY'S REPORTS
SHOP DEMONSTRATION	C		SEE BLAST DOOR NOTES
SPECIAL ITEMS RELATED TO THE OTHER EXPLOSIVES SAFETY RELATED ITEMS			
REBAR FARADAY-SHIELD	P	DWG E-102A; E-501; E-504	INSPECT REINFORCING STEEL TO ENSURE ELECTRICAL CONTINUITY BETWEEN THE CAP, WALLS, SLAB AND FOUNDATION THROUGH CRIMPED CONNECTIONS. DOCUMENT CONNECTIONS WITH PHOTOS AND CONTINUITY TEST. ALL CRIMPED CONNECTIONS MUST BE INSPECTED PRIOR TO CONCRETE PLACEMENT.
ECM GROUNDING	P	DWGS E-102A; E-501; E-504	VISUALLY INSPECT TO ENSURE ECM FOUNDATION IS BONDED TO THE GROUNDING SYSTEM. DOCUMENT WITH PHOTOS.
GROUNDING SYSTEM	P	DWGS E-102A; E-501; E-504, DA PAM 385-64, 17-27.	VISUALLY INSPECT GROUNDING SYSTEM CONDUCTORS TO ENSURE NO DAMAGE, BREAKAGE, OR CORROSION HAS OCCURED TO THE CONDUCTORS DURING INSTALL AND BEFORE EARTH BURIAL DOCUMENT WITH PHOTOS.
INDIVIDUAL BONDS	P	DWGS E-102A; E-501; E-504, NFPA 780, 8.9 DA PAM 385-64, 17.27.	INSPECT ALL BONDS FOR LOOSE CONNECTIONS THAT MIGHT RESULT IN HIGH-RESISTANCE CONNECTIONS.
LPS COMPONENTS	P	NFPA 780, 8.9 DA PAM 385-64, 17-27	INSPECT LPS COMPONENTS FOR SECURE MOUNTING AND PROTECTION AGAINST ACCIDENTAL MECHANICAL DISPLACEMENT AND TO ENSURE NO DAMAGE, BREAKAGE, OR CORROSION HAS OCCURRED.
LPS TESTING	S	NFPA 780, 8.9 DA PAM 385-64, 17-28	PERFORM BONDING TEST ACROSS EACH BOND, AND AN EARTH ELECTRODE TEST OF THE LPS.
EARTH COVER	P	DWGS S-301	INSPECT DEPTH GAUGES ON ROOF PRIOR TO EARTH COVER PLACEMENT FOR SIZE AND STABILITY. INSPECT EARTH COVER DEPTH AND SLOPE TO ENSURE A 2'-0" MINIMUM IS PROVIDED ABOVE STRUCTURE.
DOOR LAPS	C	DWGS S-504	INSPECT DOOR LAPS AT TOP AND BOTTOM OF DOOR FRAME
MISCELLANEOUS EMBEDDED AND ATTACHED ITEMS (DOORS, FRAMES, TRENCHES, ETC)	P		INSPECT EMBEDDED AND ATTACHED ITEMS TO ENSURE THEY ARE BONDED TO THE GROUNDING SYSTEM. DOCUMENT WITH PHOTOS.

SPECIAL INSPECTION NOTES:

1. INSPECTION INTERVALS ARE AS FOLLOWS:
   C - CONTINUOUS: THE FULL-TIME OBSERVATION OF WORK REQUIRING SPECIAL INSPECTION BY AN APPROVED SPECIAL INSPECTOR WHO IS PRESENT IN THE AREA WHERE THE WORK IS BEING PERFORMED.
   P - PERIODIC: THE PART-TIME OR INTERMITTENT OBSERVATION OF WORK REQUIRING SPECIAL INSPECTION BY AN APPROVED SPECIAL INSPECTOR WHO IS PRESENT IN THE AREA WHERE THE WORK HAS BEEN OR IS BEING PERFORMED AND AT THE COMPLETION OF THE WORK.
   S - SUBMITTAL
2. STRUCTURAL TEST AND SPECIAL INSPECTIONS ARE BASED ON CHAPTER 17 OF THE IBC.
3. CONTRACTOR MUST HIRE A QUALIFIED INSPECTIONS AND TESTING AGENCY TO PERFORM SPECIAL INSPECTIONS AND TESTING IN ACCORDANCE WITH THE IBC. SUBMIT INSPECTION REPORTS TO THE CONTRACTING OFFICER FOR EACH DAY SPECIAL INSPECTIONS AND TESTING ARE PERFORMED.
4. THE SPECIAL INSPECTIONS LISTED IN THIS TABLE ARE TO BE USED IN CONJUNCTION WITH ALL SPECIAL INSPECTION REQUIREMENTS PER THE IBC SHOWN BELOW.
5. THE CONTRACTOR MUST EMPLOY ONE OR MORE APPROVED AGENCIES TO PERFORM INSPECTIONS DURING CONSTRUCTION ON THE TYPES OF WORK LISTED UNDER SECTION 1705 OF THE IBC REQUIRING VERIFICATION AND INSPECTION. THE CONTRACTING OFFICER MUST ATTEND ALL OBSERVATIONS. THESE INSPECTIONS ARE IN ADDITION TO THE INSPECTIONS DEFINED IN SECTION 110. THE INSPECTING AGENCY MUST PROVIDE REPORTS OF THE SPECIAL INSPECTIONS DIRECTLY TO THE GOVERNMENT.

THE FOLLOWING IS A LIST OF INSPECTIONS THAT MUST BE PERFORMED IN ACCORDANCE WITH CHAPTER 17 OF THE IBC.

- STEEL CONSTRUCTION: 1705.2
- CONCRETE CONSTRUCTION: 1705.3
- SOILS: 1705.6
- DRIVEN DEEP FOUNDATIONS: 1705.7
- CAST-IN-PLACE DEEP FOUNDATIONS: 1705.8
- HELICAL PILE FOUNDATIONS: 1705.9
- FABRICATED ITEMS: 1705.10
- SPECIAL INSPECTIONS FOR WIND RESISTANCE: 1705.11
- SPECIAL INSPECTIONS FOR SEISMIC RESISTANCE: 1705.12
- TESTING FOR SEISMIC RESISTANCE: 1705.13
- TOLERANCES: SEE SPECS

LIGHTWEIGHT CONCRETE:

1. THE FOLLOWING MIX DESIGN AND CONCRETE MATERIAL PROPERTIES MUST BE USED FOR THE LIGHTWEIGHT CONCRETE LAYER IN THE HIGH SECURITY DOOR:

LIGHTWEIGHT CONCRETE MIX DESIGN				
MATERIAL	AMOUNT	UNIT	SPECIFIC GRAVITY	ASTM
LIGHTWEIGHT AGGREGATE	1530	lb	1.38	C331
CEMENT TYPE II	721	lb	3.15	C150
WATER	315	lb	1	C1602
SILICA FUME	82	lb	2.2	C1240
SUPERPLASTICIZER - TYPE A	8	oz*	1.27	C494
SYNTHETIC FIBERS - TYPE III	0.70	lb	0.855	C1116
TOTAL VOLUME	27	ft^3		
oz*/ 100lb OF CEMENTITIOUS MATERIAL				

LIGHTWEIGHT CONCRETE MATERIAL PROPERTY REQUIREMENTS			
PROPERTY	AMOUNT	UNIT	ASTM
SLUMP	2 + 1/4	in	C143
MINIMUM DENSITY - UNIT WEIGHT	115	lb/ ft^3	C138
STRENGTH (28 DAY MINIMUM)	4000	psi	C78

2. LIGHTWEIGHT AGGREGATES MUST BE DRY.
3. ADJUST WATER AMOUNT TO +/- 0.5 lb SO THAT MIX HOLDS SHAPE WHEN FORMED INTO A BALL IN THE HAND.
4. MIX CAN BE SPLIT FOR VOLUME NEEDED.
5. MIX PROCEDURE:
   A. WEIGH OUT ALL MATERIALS.
   B. IN A SEPARATE CONTAINER, COMBINE AND MIX HALF OF WATER, PLASTICIZER AND ALL FIBERS.
   C. IN ANOTHER SEPARATE CONTAINER, COMBINE AND MIX SILICA FUME AND CEMENT.
   D. POUR WATER WITH PLASTICIZER AND ALL FIBERS INTO MIXER.
   E. POUR LIGHTWEIGHT FINE AGGREGATE INTO MIXER.
   F. SLOWLY ADD SILICA FUME AND CEMENT TO MIXER.
   G. ADD REMAINING WATER ADJUSTING AS NECESSARY (NOTE 3).
   H. ALLOW TO MIX FOR AT LEAST 10 MINUTES.
   I. WHEN MIX IS READY, POUR INTO DOOR CAVITIES OVER REBAR, TO PRESCRIBED DEPTH, ENSURE MIX FILLS ALL AREAS BEHIND REBAR, VIBRATE AS NECESSARY, NO VOIDS ALLOWED.
6. ALLOW CONCRETE TO CURE FOR 14 DAYS BEFORE MOVING DOOR AND 28 DAYS BEFORE WELDING FRONT PANELS ONTO DOOR.
7. QUESTIONS CAN BE REFERRED TO NAVFAC EXWC DOD LOCK PROGRAM, AND SECURITY, ENGINEERING DIV SH22.

STEEL DECK:

1. THE DESIGN, FABRICATION, ERECTION OF METAL DECKING MUST BE IN ACCORDANCE WITH THE CURRENT EDITION OF THE SDI SPECIFICATIONS AND THE SDI DIAPHRAGM MANUAL
2. STEEL ROOF DECK AND SIDING IS 1 1/2" x 18 GAUGE FACTORY-FINISHED DESIGNED FOR THE DEAD AND LIVE LOADS INDICATED.
3. STEEL ROOF DECK AND SIDING MUST BE ATTACHED TO SUPPORTS WITH #14 STAINLESS STEEL SCREWS AND WASHERS AT EA VALLEY (MINIMUM 5 PER PANEL). USE 1/4-INCH BUTYL TAPE TO SEAL LAPS.
4. THE PLANS INDICATE DECK SPAN DIRECTION.
5. SUSPENDED CEILINGS, LIGHT FIXTURES, DUCTS, AND OTHER UTILITIES MUST NOT BE SUPPORTED FROM THE STEEL DECK.
6. STEEL DECK MUST CONFORM TO THE COATINGS FOR STRUCTURAL STEEL PROVIDED ON SHEET S-001.

MECHANICAL MATERIALS

1. LOUVERS MUST BE CONSTRUCTED OF 16 GAUGE GALVANIZED STEEL WITH 4" DEEP FRAME. BLADES MUST BE 16 GAGE GALVANIZED STEEL POSITIONED AT APPROXIMATELY 37.5 DEGREES DOWN FROM THE HORIZONTAL AND SPACED APPROXIMATELY 6" ON CENTER. SCREEN MUST BE 19 GAUGE GALVANIZED 1/4" MESH. APPROXIMATELY 50% FREE AREA.
2. VENTILATORS MUST BE CONSTRUCTED OF MINIMUM 24 GAUGE GALVANIZED STEEL AND MUST BE DESIGNED FOR A SUSTAINED WIND SPEED OF 132 MPH.
3. FIRE DAMPER FUSIBLE LINKS MUST HAVE A MELTING POINT OF 160 TO 165 DEGREES FAHRENHEIT. BREAKING STRENGTH MUST BE SUITABLE FOR LOADS IMPOSED BY COUNTERWEIGHTS.
4. PIPE FLANGE GASKETS MUST BE OF NON-ASBESTOS MATERIAL IN ACCORDANCE WITH ASME B16.21. GASKETS MUST BE FLAT, 1/16 INCH THICK, AND CONTAIN ARAMID FIBERS BONDED WITH STYRENE BUTADIENE RUBBER. FLANGE FASTENERS MUST BE TYPE 316 STAINLESS STEEL.

THESE DRAWINGS ARE AN EXACT REPLICA OF THE STANDARD MAGAZINE TYPE "CLWS" PROVIDED BY NAVFAC. THE DESIGN WILL BE SITE ADAPTED AND MODIFIED TO MEET THE SPECIFIC GEOTECHNICAL AND LOADING CONDITIONS SPECIFIC TO NAVAL SUBMARINE BASE NEW LONDON, GROTON, CONNECTICUT.

DOOR COATINGS:

1. ALL COATINGS AND INSTALLATION OF COATINGS MUST COMPLY WITH:
   A. UFGS - 09 97 13.27.
   B. SHOP COATINGS: SSPC (THE SOCIETY OF PROTECTIVE COATINGS) QP3.
   C. FIELD COATINGS: SSPC QP1 + QS1.
   D. COLOR: LIGHT GRAY.
2. SURFACE PREPARATION:
   A. REMOVE SLAG FROM ALL WELDING SURFACES PRIOR TO CLEANING IN ACCORDANCE WITH NACE SP0178.
   B. SOLVENT CLEAN SURFACE TO BE COATED PRIOR TO ABRASIVE BLASTING IN ACCORDANCE WITH SSPC SP1.
   C. DRY ABRASIVE BLAST TO NEAR WHITE FINISH IN ACCORDANCE WITH SSPC SP10. BLAST PROFILE MUST BE 1-3 MILS TOOTH HEIGHT.
3. PAINT SYSTEMS:
   A. TOTAL COATING DRY FILM THICKNESS (DFT): 12 MILS.
   B. PRIMER COAT: ABRASION RESISTANT INORGANIC ZINC SILICATE PRIMER (3-5 MILS). SSPC PAINT 20, TYPE IC, LEVEL 1, WITH AT LEAST 85% ZINC IN DRY FILM.
   C. INTERMEDIATE COAT: HIGH SOLIDS EPOXY COATING (3-5 MILS). MPI #108.
   D. TOP COAT: HIGH SOLIDS POLYURETHANE COATING (3-5 MILS). MPI #72.
4. ALL SURFACES OF ALL DOOR COMPONENTS MUST BE SOLVENT CLEANED, DRY ABRASIVE BLASTED, AND ZINC RICH PRIMER COATED. PRIOR TO FULLY ASSEMBLING OR FABRICATING DOOR, CLEAN AND PRIMER SURFACES THAT WILL BECOME INACCESSIBLE AFTER DOOR IS ASSEMBLED. THE DOOR MUST NOT BE GALVANIZED. EPOXY INTERMEDIATE AND POLYURETHANE TOP COATS MUST BE APPLIED TO ALL EXTERIOR SURFACES OF THE FULLY-ASSEMBLED DOOR.

ELECTRICAL BONDING & GROUNDING

1. ALL STEEL LOUVERS, VENTILATORS, DOORS AND FRAMES MUST BE ELECTRICALLY BONDED TO THE MAGAZINE REINFORCING CAGE.
2. ALL STRUCTURAL AND MISCELLANEOUS ITEMS EMBEDDED IN CONCRETE MUST BE ELECTRICALLY BONDED TO THE REINFORCING CAGE BY WIRE TIES.
3. THE REINFORCING CAGE MUST BE MADE ELECTRICALLY CONTINUOUS BY WIRE TIES AT A MINIMUM OF 48 INCH ON CENTERS IN EVERY DIRECTION, REFER TO DETAIL A1 ON DRAWING E-504.
4. ALL WALLS AND CONSTRUCTION JOINTS MUST BE ELECTRICALLY BONDED. SEE THE ELECTRICAL DRAWINGS FOR DETAILS.
5. ALL STRUCTURAL STEEL AND REINFORCING STEEL MUST BE GROUNDED TO THE SECONDARY GROUND. SEE THE ELECTRICAL DRAWINGS FOR DETAILS.
6. BURIED OR EMBEDDED ITEMS MUST BE DOCUMENTED WITH PHOTOS AT INTERVALS OF 20 FEET.

PLUMBING MATERIALS

1. FLOOR DRAIN FIXTURES MUST CONSIST OF A CAST IRON BODY, NICKEL BRONZE ADJUSTABLE TOP, 6" ROUND STRAINER, FLASHING COLLAR, SURFACE MEMBRANE CLAMP, AND DEEP SEAL TRAP. PROVIDE WITH BARRIER-TYPE TRAP SEAL PROTECTION DEVICE CONFORMING TO ASSE 1072 WHERE CONNECTING TO SANITARY SEWER SYSTEM.
2. UNDERGROUND DRAINAGE PIPING MUST CONSIST ASTM D2665 SCH 40 PVC SOLID CORE PIPING WITH DWV PATTERN FITTINGS. PERFORATED DRAIN PIPING MUST INCLUDE 1/2" HOLES SPACED 5" O.C. IN TWO ROWS 120 DEGREES APART PER ASTM D2729. ALL PERFORATED DRAIN PIPING MUST BE INSTALLED WITH HOLES FACING DOWN.
3. PREFABRICATED TRENCH DRAINS MUST BE 6" WIDE, SHALLOW, PRECAST POLYESTER CONCRETE CHANNEL OF INTERLOCKING DESIGN. 3" OUTLETS. DUCTILE IRON EDGE RAIL AND EXTRA HEAVY DUTY. DIN19580 LOAD CLASS E DUCTILE IRON SLOTTED TOP GRATE FASTENED TO RAIL. GRATE SLOTS MUST BE NO WIDER THAN 1/4" OR PROVIDE STAINLESS STEEL MESH SCREEN FASTENED TO BOTTOM OF GRATES. MESH OPENINGS MUST BE NO LARGER THAN 1/4" TO MITIGATE RODENT ENTRY.

BLAST DOOR NOTES:

1. THE BLAST DOOR MANUFACTURER MUST BE SOLELY RESPONSIBLE FOR INSTALLATION AND ERECTION OF THE BLAST DOOR.
2. THE DOOR MANUFACTURER MUST COMMENCE A SHOP DEMONSTRATION OF EACH DOOR IN THE PRESENCE OF A GOVERNMENT OFFICIAL, CONSISTING OF A SUCCESSFUL CYCLE OF OPENING AND CLOSING THE DOOR BY CONTROLS, OPENING AND CLOSING OF TRENCH PLATES BY DOOR PLOWS AND ALIGNMENT OF DOOR IN SECURITY PILASTER. DEMONSTRATION MUST BE A MINIMUM OF HALF THE LENGTH OF THE DOOR TRAVEL. DEMONSTRATION MUST ALSO INCLUDE MANUAL OPERATION OF BLAST DOOR IN BOTH DIRECTIONS.
3. THE DOOR MANUFACTURER MUST COMMENCE A FIELD DEMONSTRATION OF EACH DOOR IN THE PRESENCE OF A GOVERNMENT OFFICIAL, CONSISTING OF A SUCCESSFUL CYCLE OF OPENING AND CLOSING THE DOOR BY CONTROLS. OPENING AND CLOSING OF TRENCH PLATES BY DOOR PLOWS, LOCKING AND UNLOCKING DOOR, AND ALIGNMENT OF DOOR IN SECURITY PILASTER.
4. THE BLAST DOOR MANUFACTURER MUST HAVE A MINIMUM OF 10 YEARS OF EXPERIENCE IN THE DESIGN, CONSTRUCTION AND INSTALLATION OF DOORS WEIGHING A MINIMUM OF 30 KIPS, CONSISTING OF BOTTOM ROLLING DOORS AND LARGE HEAVY DOORS SUCH AS MAGAZINE BLAST DOORS AND/OR NUCLEAR CONTAINMENT DOORS. THE BLAST DOOR MANUFACTURER MUST SUBMIT PROOF OF EXPERIENCE TO THE CONTRACTING OFFICER FOR APPROVAL BY NAVFAC EXWC AND NAVFAC ATLANTIC. A MINIMUM OF 5 EXAMPLES MUST BE SUBMITTED.
5. PROVIDE STEEL PLATE BOTTOM WHEELS HAVING A MINIMUM TREAD DIAMETER AS REQUIRED FOR THE ACTUAL WHEEL LOADING. CONSTRUCTION WHEEL ASSEMBLES TO PERMIT REMOVAL OF THE WHEEL WITHOUT REMOVING THE DOOR LEAF FOR ITS POSITION ON THE RAIL.
6. THE GENERAL CONTRACTOR MUST SELECT A SINGLE SUPPLIER TO PROVIDE A COMPLETE BLAST DOOR SYSTEM INCLUDING BUT NOT LIMITED TO THE BLAST DOOR AND ALL OF ITS ASSOCIATED COMPONENTS AND HARDWARE, RAIL, TRENCH, TRENCH COVER ASSEMBLY, PLOW AND EMBEDDED PLATES.
7. PROVIDE A HAND RELEASE ON THE DESIGNED BRAKING SYSTEM TO RELEASE THE BRAKE WHEN IT BECOMES NECESSARY TO MANUALLY MOVE THE DOOR. PROVIDE AN AUTOMATIC RESET TYPE HAND RELEASE SO THAT THE BREAK WILL BE OPERABLE DURING SUBSEQUENT ELECTRICAL OPERATIONS OF THE DOOR.
8. BLAST DOOR MANUFACTURER MUST PROVIDE A COMPLETE BLAST DOOR MANUAL THAT INCLUDES MAINTENANCE AND STEP BY STEP INSTRUCTIONS OF WHEEL REMOVAL.
9. THE PLOW/TRENCH COVER ASSEMBLY ALONG WITH THE WHEEL/MOTOR ASSEMBLY ARE NOTIONAL AND SHOWN FOR BIDDING PURPOSES AND MAY VARY BASED ON THE DOOR MANUFACTURER'S APPROVED DESIGN.
10. MANUFACTURER TO DESIGN AND FURNISH DOOR STOPS AT TRAILING AND LEADING EDGES OF DOOR.

ORIGINAL STANDARD DRAWING IS NAVFAC DRAWING NUMBER 12877612 SHT 3 OF 51

SYM	DESCRIPTION	DATE	APPR

NAVFAC

SEAL

Jacobs
1100 NORTH GLEBE ROAD
SUITE 500
ARLINGTON, VIRGINIA 22201
571.218.1000
FAX: 571.218.1600

A/E INFO

APPROVED
FOR COMMANDER NAVFAC 8/14/2025
ACTIVITY
APPROVED BY LCDR ELIZABETH OLOKODE NAVFAC NLON FEAD DIRECTOR NEW LONDON, GROTON, CT
SATISFACTORY TO DATE 05/27/2025

DES JAF	DRW SFF	CHK TPH
PM/DM	SMS/CWJ	
BRANCH MANAGER	NEK	
CHIEF ENG/ARCH	JWJ	
FIRE PROTECTION	HPN	

DEPARTMENT OF THE NAVY
NAVAL FACILITIES ENGINEERING SYSTEMS COMMAND
MID-ATLANTIC
NAVAL FACILITIES ENGINEERING SYSTEMS COMMAND - MID-ATLANTIC
NAVAL STATION - NORFOLK, VA
NAVAL SUBMARINE BASE NEW LONDON
GROTON, CONNECTICUT
P-1102 WEAPONS MAGAZINE & ORDNANCE OPERATIONS FACILITY
CLWS MAGAZINE
GENERAL NOTES – 2

SCALE: NONE
EPROJECT NO.: 1667770
CONSTR. CONTR. NO.
NAVFAC DRAWING NO.
12894247
SHEET 4 OF 77
S-002

FILE NAME: C:\pw_work\6\\dev0031\ch2mhill_09050107\\d1492563\S-002.dwg LAYOUT NAME: S-002 PLOTTED: Friday, June 13, 2025 - 9:12am USER: 09050107

MINIMUM TENSION LAP SPLICE LENGTHS ("1.3ℓ_d")			MINIMUM EMBEDMENT LENGTHS FOR STANDARD END HOOKS ("ℓ_{dh}")	
BAR SIZE	f'_c = 5,000 PSI		BAR SIZE	f'_c > 5,000 PSI
	TOP BARS	OTHER BARS		
#3	31.2	31.2	#3	6
#4	36.9	31.2	#4	8
#5	46.1	35.5	#5	10
#6	55.4	42.6	#6	12
#7	80.7	62.1	#7	13
#8	92.3	71.0	#8	15
#9	104.1	80.1	#9	17
#10	117.2	90.1	#10	19
#11	130.1	100.1	#11	22

NOTES:

1. IF CONCRETE COVER IS NOT GREATER THAN THE DIAMETER OF THE BAR OR THE CENTER TO CENTER SPACING IS NOT GREATER THAN (3) BAR DIAMETERS, THEN VALUES MUST BE INCREASED BY 50%. ALL LAPS ARE TYPICAL TENSION LAP SPLICES U.N.O. ON PLANS OR DETAILS.
2. "TOP BARS" ARE HORIZONTAL BARS WITH MORE THAN 12 INCH DEPTH OF CONCRETE CAST BELOW THEM.
3. IF CONCRETE COVER IS NOT GREATER THAN 2 1/2 INCH AND THE END COVER OF HOOK IS NOT GREATER THAN 2 INCH, THEN VALUES MUST BE INCREASED BY 43%.
4. LAPS SPLICES AND EMBEDMENT LENGTHS SHOWN IN THIS DETAIL ARE BASED ON A DYNAMIC INCREASE FACTOR = 1.29. LAPS FOR REINFORCEMENT IN STRUCTURAL COMPONENTS NOT RELATED TO BLAST DESIGN (WING WALLS, FOUNDATIONS, SLAB-ON-GRADE) MAY BE REDUCED BY THE DYNAMIC INCREASE FACTOR. LAP SPLICES FOR REINFORCEMENT IN BLAST COMPONENTS (HEADER BEAM, HEADWALL, ROOF SLAB, SIDE/ END WALLS, PILASTERS) MAY NOT BE REDUCED BY THE DYNAMIC INCREASE FACTOR.
5. PER UFC 3-340-02, FOR BLAST COMPONENTS SPLICES OF CONCRETE REINFORCEMENT MUST BE STAGGERED ON OPPOSITE FACES AND SPLICES OF ADJACENT PARALLEL BARS WITHIN THE SAME LAYER MUST BE STAGGERED.

C1 REINFORCEMENT SPLICE SCHEDULE
SCALE: NONE

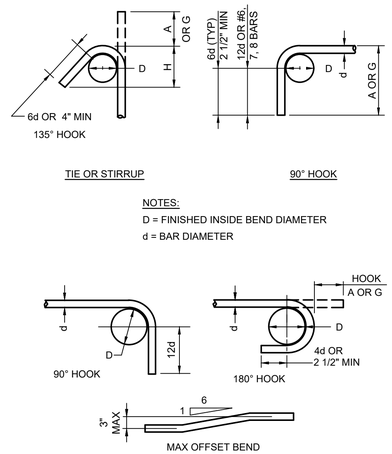

NOTES:

D = FINISHED INSIDE BEND DIAMETER

d = BAR DIAMETER

STIRRUP HOOKS

135° SEISMIC HOOK			
BAR SIZE	D	A OR G	APPROX H
#3	1.5	4	2.5
#4	2	4.5	3
#5	2.5	5.5	3.75
#6	4.5	8	4.5
#7	5.25	9	5.25
#8	6	10.5	6

BAR SIZE	DIMENSIONS OF STANDARD 180-DEG HOOKS, ALL GRADE			DIMENSIONS OF STANDARD 90-DEG HOOKS, ALL GRADE	
	A OR G	J	D	A OR G	D
#3	5	3	3	6	3
#4	6	4	3	8	3
#5	7	5	4	10	4
#6	8	6	5	12	5
#7	10	7	6	14	6
#8	11	8	6	16	6
#9	15	12	10	19	10
#10	17	14	11	22	11
#11	19	15	12	24	12

C2 STIRRUP AND TIE HOOK DIMENSIONS
SCALE: NONE

THESE DRAWINGS ARE AN EXACT REPLICA OF THE STANDARD MAGAZINE TYPE "CLWS" PROVIDED BY NAVFAC. THE DESIGN WILL BE SITE ADAPTED AND MODIFIED TO MEET THE SPECIFIC GEOTECHNICAL AND LOADING CONDITIONS SPECIFIC TO NAVAL SUBMARINE BASE NEW LONDON, GROTON, CONNECTICUT.

NOTES:

1. PROVIDE ADDITIONAL REINFORCING THE SAME SIZE AS DISCONTINUOUS REINFORCEMENT AT OPENING. QUANTITY OF REINFORCING IN EACH DIRECTION MUST BE EQUAL TO OR ONE GREATER THAN THE NUMBER OF DISCONTINUOUS BARS. PLACE 1/2 OF ADDITIONAL REINFORCING BARS EACH SIDE OF OPENING, PLACE ADDITIONAL REINFORCEMENT AT 3" OC (TYPICAL BOTH DIRECTIONS AND ALL LAYERS OF REINFORCEMENT). START FIRST BAR 2" CLEAR TO OPENING.
2. EXTEND ADDITIONAL REINFORCING BEYOND EDGE OF OPENING AS SHOWN ABOVE. ADDITIONAL BARS MAY TERMINATE AT THE END OF THE WALL WITH A STANDARD HOOK WHERE THE LENGTH OF THE WALL WILL NOT PERMIT BARS TO EXTEND AS SHOWN ABOVE.
3. TYPICAL WALL OR SLAB REINFORCING NOT SHOWN FOR CLARITY. TERMINATE TYPICAL REINFORCING 2" CLEAR TO OPENING.
4. ADDITIONAL REINFORCING AS SHOWN ABOVE IS REQUIRED IN ANY CASE FOR SLABS, WALLS, AND FOUNDATIONS WHERE THE OPENING SIZE IS GREATER THAN THE SPACING OF REINFORCING IN EITHER DIRECTION MINUS 4" OF CONCRETE COVER (2" COVER EACH SIDE OF OPENING).

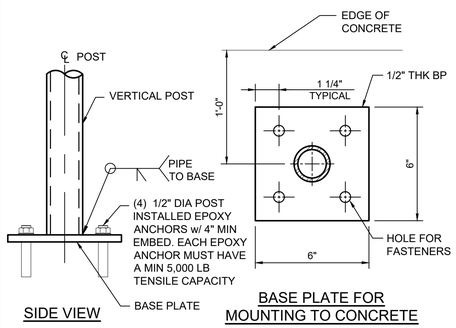

B1 ALUMINUM GUARDRAIL POST DETAIL
SCALE: NONE

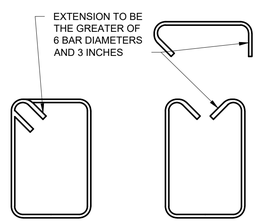

NOTE:

1. THIS IS A GENERAL DETAIL ONLY, UNO, AND THE STIRRUPS FOR THE HEADER BEAM PILASTER, HEADWALL AND ROOF MUST BE BENT AS SHOWN IN THEIR CORRESPONDING DETAILS.
2. USING A U STIRRUP WITH A CROSS-TIE INSTEAD OF A CLOSED TIE IS ACCEPTABLE FOR BEAMS ONLY, PER ACI 318-19 PARAGRAPH 9.7.7.

B2 SEISMIC HOOP CLOSED TIE DETAIL
SCALE: NONE

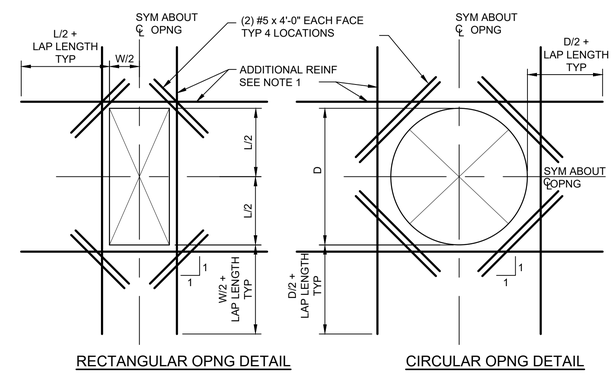

B4 EXTRA REINFORCING AROUND OPENINGS
SCALE: NONE

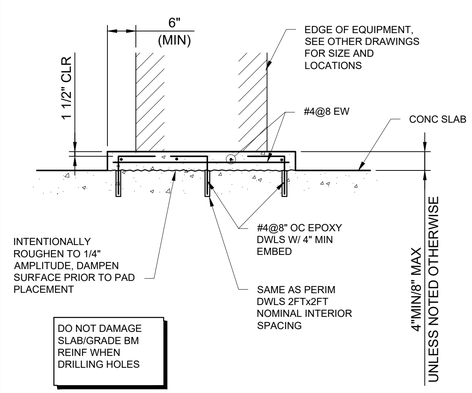

A1 TYPICAL MISCELLANEOUS HOUSEKEEPING PAD (INTERIOR)
SCALE: NONE

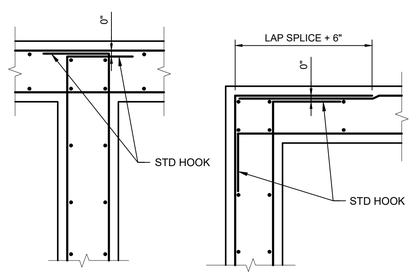

NOTES:

1. ALL HOOKS MUST BE STD 90 DEGREE HOOKS UNO.
2. SEE DRAWINGS FOR ADDITIONAL HORIZONTAL BARS. STAGGER BETWEEN TYPICAL REINF SPACING, EXTEND TO 1/5 OF DISTANCE TO NEAREST ADJACENT WALL IN EACH DIRECTION, UNO.

A2 WALL REINFORCEMENT AT CORNERS AND INTERSECTIONS
SCALE: NONE

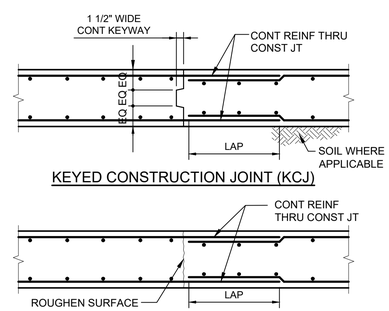

NOTES:

1. TO BE USED ONLY WHERE CALLED FROM IN THE CONTRACT DOCUMENTS, OR AS PERMITTED BY THE CONTRACTING OFFICER.

A3 CONSTRUCTION JOINT
SCALE: NONE

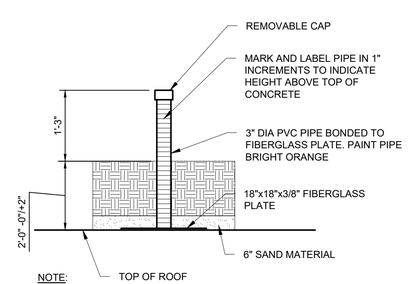

NOTE:

1. PLACE DEPTH GAUGE ABOVE WATERPROOFING MEMBRANE SYSTEM.

A4 DEPTH GAUGE DETAIL
SCALE: NONE

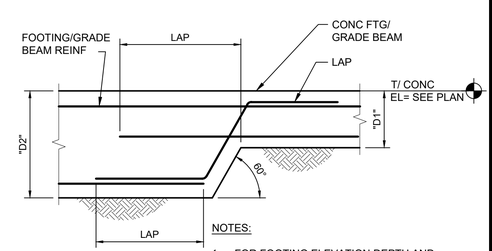

NOTES:

1. FOR FOOTING ELEVATION DEPTH AND REINFORCING, SEE PLAN AND OTHER STANDARD AND COMMON DETAILS.
2. MAXIMUM INDIVIDUAL STEP = 2'-0" ("D2" - "D1").

A5 TYPICAL BOTTOM STEP FOOTING/GRADE BEAM
SCALE: NONE

ORIGINAL STANDARD DRAWING IS NAVFAC DRAWING NUMBER 12877613 SHT 4 OF 51

SYM	DESCRIPTION	DATE	APPR

NAVFAC

SEAL

Jacobs
1100 NORTH GLEBE ROAD
SUITE 500
ARLINGTON, VIRGINIA 22201
571.218.1000
FAX: 571.218.1600

A/E INFO

APPROVED

FOR COMMANDER NAVFAC 8/14/2025

ACTIVITY
APPROVED BY LCDR ELIZABETH CLOKODE NAVFAC N.LON FEAD DIRECTOR NEW LONDON, GROTON, CT

SATISFACTORY TO DATE 05/27/2025

DES JAF	DRW SFF	CHK TPH
PM/DM	SMS/CWJ	
BRANCH MANAGER	NEK	
CHIEF ENG/ARCH	JWJ	
FIRE PROTECTION	HPN	

DEPARTMENT OF THE NAVY
NAVAL FACILITIES ENGINEERING SYSTEMS COMMAND - MID-ATLANTIC
MID-ATLANTIC
NAVAL FACILITIES ENGINEERING SYSTEMS COMMAND
NAVAL STATION - NORFOLK, VA
NAVAL SUBMARINE BASE NEW LONDON
GROTON, CONNECTICUT
P-1102 WEAPONS MAGAZINE & ORDNANCE OPERATIONS FACILITY
CLWS MAGAZINE
STANDARD DETAILS

SCALE: NONE
EPROJECT NO.: 1667770
CONSTR. CONTR. NO.
NAVFAC DRAWING NO. 12894248
SHEET 5 OF 77
S-003

FILE NAME: C:\pw_work\dr\dev003\{o2mhill_09050107}{d1495963}S-003.dwg LAYOUT NAME: S-003 PLOTTED: Friday, June 13, 2025 - 9:12am USER: 09050107

SITE SPECIFIC DATA*:

1. SITE SPECIFIC WIND DATA:
   - A. SITE SPECIFIC ULTIMATE WIND SPEED: 136 MPH
   - B. EXPOSURE: "C"
   - C. RISK CATEGORY: III
2. SITE SPECIFIC SEISMIC DATA:
   - A. RISK CATEGORY: III
   - B. IMPORTANCE FACTOR: 1.25
   - C. SEISMIC DESIGN CATEGORY: B
   - D. SITE SEISMICITY: SS = 0.19g, S1 = 0.052g
   - E. SITE CLASS: D
3. SNOW DESIGN DATA:
   - A. GROUND SNOW LOAD: 30 PSF
   - B. EXPOSURE FACTOR: 1.0
   - C. IMPORTANCE FACTOR: 1.10
   - D. THERMAL FACTOR: 1.2
4. ENVIRONMENTAL SEVERITY CLASSIFICATION.
   - A. ESC C4

* - SITE SPECIFIC DATA INCLUDED FOR INFORMATION ONLY. REFER TO S-001 FOR PARAMETERS USED IN THE DESIGN AND DEVELOPMENT OF THE STANDARDIZED DRAWINGS

SITE SPECIFIC GEOTECHNICAL DATA:

1. FOUNDATION DESIGN IS IN ACCORDANCE WITH THE RECOMMENDATIONS OF THE GEOTECHNICAL ENGINEERING REPORT PREPARED BY JACOBS, DATED 07 FEBRUARY 2025.
2. FOUNDATION SYSTEMS:
   CLWS-001, CLWS-002, CLWS-003, CLWS-004, CLWS-005:
   PLACE FOUNDATIONS ON REINFORCED AND COMPACTED ENGINEERED FILL OVER CEMENTITIOUS RIGID INCLUSIONS (GROUND IMPROVEMENT SYSTEM), REFER TO CIVIL PLANS SHEET B-101, GROUND IMPROVEMENT PLANS FOR ADDITIONAL REQUIREMENTS. GROUND IMPROVEMENT SYSTEM MUST CREATE A FOUNDATION SUBGRADE WITH THE MINIMUM BEARING CAPACITY AS NOTED ON S-001 AND A MAXIMUM ALLOWABLE SETTLEMENT OF 3/4 INCH.

   CLWS-006
   PLACE FOUNDATIONS ON OVEREXCAVATED AREA USING CRUSHED AGGREGATE OVER BEDROCK. REFER TO CIVIL PLANS SHEET B-101 FOR ADDITIONAL INFORMATION.
3. PROVIDE MEASURES TO PREVENT WATER, FROST OR ICE FROM PENETRATING FOOTING OR SLAB SUBGRADE BEFORE PLACING CONCRETE. FOOTINGS, MUD SLABS, OR BUILDING SLABS MUST NOT BE PLACED INTO OR AGAINST SUBGRADE CONTAINING FREE WATER, FROST OR ICE.
4. CONCRETE FOUNDATIONS OR A 3" THICK CONCRETE MUD MAT (LEAN CONCRETE) MUST BE PLACED THE SAME DAY THE SUBGRADE IS INSPECTED. IF THE GROUND SURFACE IS DISTURBED BEFORE CONCRETE IS PLACED, THE SUBGRADE MUST BE RE-INSPECTED BY THE CONTRACTOR'S GEOTECHNICAL ENGINEER AT NO ADDITIONAL COST.
5. DESIGN, PROVIDE AND MAINTAIN DEWATERING SYSTEMS, EARTH RETENTION SYSTEMS, BRACING. PROTECT EXISTING STRUCTURES AND UTILITIES DURING CONSTRUCTION.
6. WHEN FILLING AGAINST OPPOSITE SIDES OF A WALL OR STRUCTURE, BACKFILL IN LIFTS THAT MAINTAIN LEVEL ELEVATIONS WITHIN 12" ON BOTH SIDES TO BALANCE THE LATERAL PRESSURE.
7. EARTHWORK, INCLUDING FOUNDATION SUBGRADE, FILL AND BACKFILL MUST BE INSPECTED AND APPROVED BY THE CONTRACTOR'S GEOTECHNICAL ENGINEER.
8. WHERE EXCAVATION WOULD BE BELOW A LINE EXTENDING UPWARD AT A 1.0H TO 1.0V SLOPE FROM THE BOTTOM OF A FOUNDATION OR UTILITY, PROVIDE SHEETING, SHORING, AND BRACING. DO NOT UNDERMINE EXISTING CONSTRUCTION.

CODES AND STANDARDS:

American Concrete Institute (ACI)
301 (2016) Specifications for Structural Concrete
318 (2014) Building Code Requirements for Structural Concrete

American Institute of Steel Construction (AISC)
360 (2016) Specification for Structural Steel Buildings

American Society for Testing and Materials (ASTM)
A29 (2020) Standard Specification for General Requirements for Steel Bars, Carbon and Alloy, Hot-Wrought
A500 (2020) Standard Specification for Cold-Formed Welded and Seamless Carbon Steel Structural Tubing in Rounds and Shapes
A572 (2018) Standard Specification for High-Strength Low-Alloy Columbium-Vanadium Structural Steel
A615 (2020) Standard Specification for Deformed and Plain Carbon-Steel Bars for Concrete Reinforcement
A992 (2020) Standard Specification for Structural Steel Shapes
A1064 (2018) Standard Specification for Carbon-Steel Wire and Welded Wire Reinforcement, Plain and Deformed, for Concrete
F1554 (2018) Standard Specification for Anchor Bolts, Steel, 36, 55, and 105-ksi Yield Strength
F3125 (2020) Standard Specification for High Strength Structural Bolts and Assemblies, Steel and Alloy Steel, Heat Treated, Inch Dimensions 120 ksi and 150 ksi Minimum Tensile Strength, and Metric Dimensions 830 MPa and 1040 MPa Minimum Tensile Strength

American Society of Civil Engineers (ASCE)
7-16 (2016) Minimum Design Loads and Associated Criteria for Buildings and Other Structures

American Society Heating, Refrigerating, and Air-Conditioning Engineers (ASHRAE)
62.1 (2016) Ventilation for Acceptable Indoor Air Quality
F16 (2017) Fundamentals Chapter 16 – Ventilation and Infiltration

Department of Defense (DoD)
5100.76 (2012) Physical Security of Sensitive Conventional Arms, Ammunition, and Explosives

International Code Council (ICC)
IBC (2018) International Building Code
IMC (2018) International Mechanical Code
IPC (2018) International Plumbing Code

National Fire Protection Association (NFPA)
70 National Electrical Code
780 Stand

SYM	DESCRIPTION	DATE	APPR.

NAVFAC

LAURA ARICO PRESLEY
REGISTERED ENGINEER
AGRICULTURE
COMMERCE
No. 105367
STATE OF TENNESSEE
08/21/2025
SEAL

Jacobs
1100 NORTH GLEBE ROAD
SUITE 500
ARLINGTON, VIRGINIA 22201
571.218.1000
FAX: 571.218.1600

A/E INFO

APPROVED
FOR COMMANDER NAVFAC 8/14/2025

ACTIVITY
APPROVED BY LCDR ELIZABETH
OLOKODE NAVFAC NLON FEAD
DIRECTOR NEW LONDON, GROTON, CT

SATISFACTORY TO DATE 05/27/2025

DES	SB	DRW JC	CHK LAP
PM/DM	SMS/CWJ		
BRANCH MANAGER	NEK		
CHIEF ENG/ARCH	JWJ		
FIRE PROTECTION	HPN		

DEPARTMENT OF THE NAVY
NAVAL FACILITIES ENGINEERING SYSTEMS COMMAND
MID-ATLANTIC

NAVAL FACILITIES ENGINEERING SYSTEMS COMMAND - MID-ATLANTIC
NAVAL STATION - NORFOLK, VA

NAVAL SUBMARINE BASE NEW LONDON
GROTON, CONNECTICUT
P-1102 WEAPONS MAGAZINE & ORDNANCE OPERATIONS FACILITY
CLWS MAGAZINE

GENERAL NOTES - 3

SCALE: NONE
EPROJECT NO.: 1667770
CONSTR. CONTR. NO.
NAVFAC DRAWING NO. 12894249
SHEET 6 OF 77

S-004S

FILE NAME: C:\pw_workdir\dms003\jb2mhill_09050107\d1495963\S-0045.dwg LAYOUT NAME: S-0045 PLOTTED: Friday, June 13, 2025 - 9:12am USER: 09050107

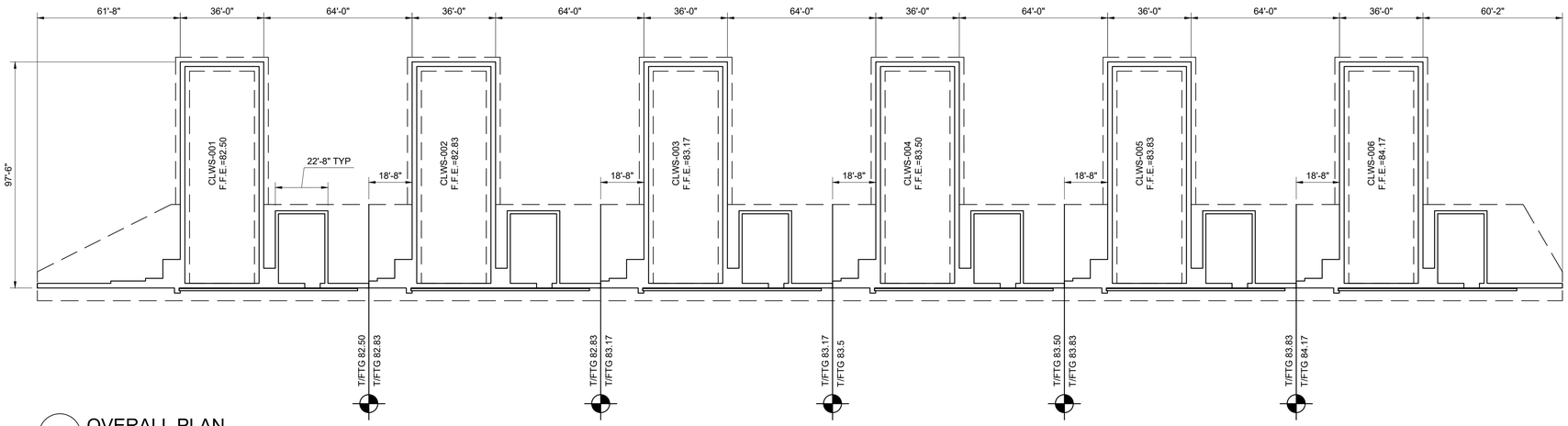

C1 OVERALL PLAN
SCALE: 1" = 30'

0' 15' 30' 60' 90'

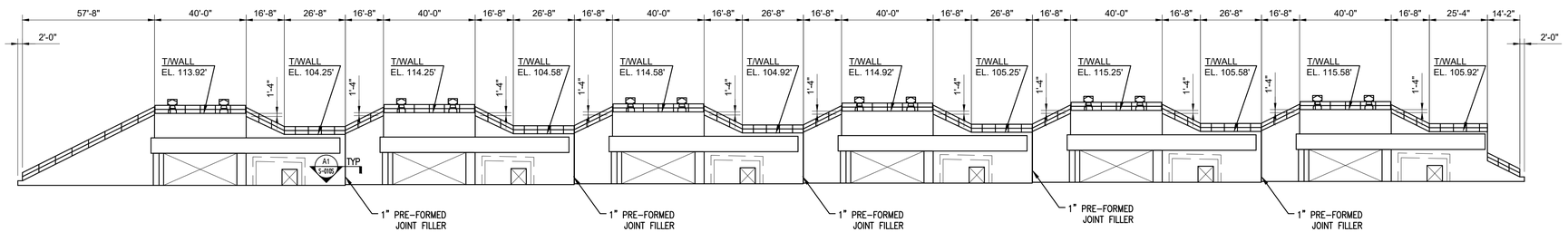

B1 HEADWALL ELEVATION
SCALE: 1" = 30'

0' 15' 30' 60' 90'

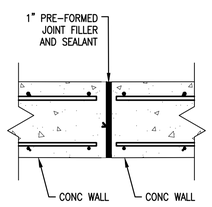

A1 SECTION
NTS

S-010S, S-201AS,
S-201BS, S-201CS

GRAPHIC SCALE:

1"=30'-0" 0' 15' 30' 60' 90'

SHEET NOTES

1. SEE SHEET S-001, S-002, S-003, AND S-004S FOR GENERAL NOTES.

SYM	DESCRIPTION	DATE	APPR

NAVFAC

LAURA ARICO PRESLEY
REGISTERED ENGINEER
AGRICULTURE
COMMERCE
No. 106582
STATE OF TENNESSEE
06/27/2025
SEAL

Jacobs
1100 NORTH GLEBE ROAD
SUITE 500
ARLINGTON, VIRGINIA 22201
571.218.1000
FAX: 571.218.1600

A/E INFO

APPROVED
FOR COMMANDER NAVFAC 8/14/2025

ACTIVITY
APPROVED BY LCDR ELIZABETH OLOKODE NAVFAC NLON FEAD DIRECTOR NEW LONDON, GROTON, CT

SATISFACTORY TO DATE 05/27/2025

DES	SB	DRW	JC	CHK	LAP

PM/DM	SMS/CWJ
BRANCH MANAGER	NEK
CHIEF ENG/ARCH	EJA
FIRE PROTECTION	HPN

DEPARTMENT OF THE NAVY
NAVAL FACILITIES ENGINEERING SYSTEMS COMMAND
MID-ATLANTIC

NAVAL FACILITIES ENGINEERING SYSTEMS COMMAND
NAVAL STATION, NORFOLK, VA
MID-ATLANTIC

NAVAL SUBMARINE BASE NEW LONDON
GROTON, CONNECTICUT
P-1102 WEAPONS MAGAZINE & ORDINANCE OPERATIONS FACILITY
CLWS MAGAZINE

OVERALL PLAN - SITE ADAPTED

SCALE: AS NOTED
EPROJECT NO.: 1667770
CONSTR. CONTR. NO.
NAVFAC DRAWING NO. 12894250
SHEET 7 OF 77

S-010S

FILE NAME: C:\pw_work\dir003\pt2mhlj_09050107\d1495963\S-010S.dwg LAYOUT NAME: S-010S PLOTTED: Friday, June 13, 2025 - 9:12am USER: 09050107

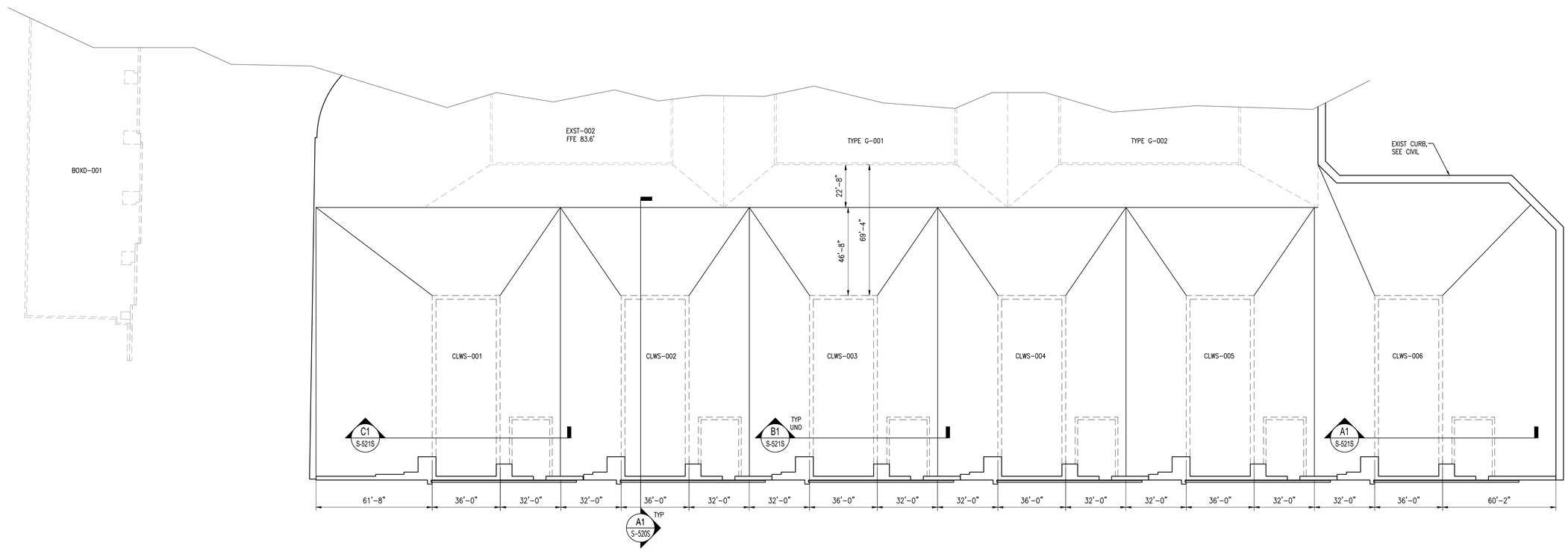

A1 OVERALL PLAN - EPDM COVERAGE

1'=30'-0"

0' 15' 30' 60' 90'

GENERAL NOTES

1. SEE SHEETS S-001, S-002, S-003, AND S-004S FOR GENERAL NOTES.

SYM	DESCRIPTION	DATE	APPR.

NAVFAC

LAURA ARICO PRESLEY
REGISTERED ENGINEER
AGRICULTURE
COMMERCE
No. 106382
STATE OF TENNESSEE
06/27/2025
SEAL

Jacobs
1100 NORTH GLEBE ROAD
SUITE 500
ARLINGTON, VIRGINIA 22201
571.218.1000
FAX: 571.218.1600
A/E INFO

APPROVED
FOR COMMANDER NAVFAC 8/14/2025

ACTIVITY
APPROVED BY LCDR ELIZABETH OLOKODE NAVFAC NLON FEAD DIRECTOR NEW LONDON, GROTON, CT

SATISFACTORY TO DATE 05/27/2025

DES	SB	DRW JC	CHK LAP

PM/DM	SMS/CWJ
BRANCH MANAGER	NEK
CHIEF ENG/ARCH	EJA
FIRE PROTECTION	HPN

DEPARTMENT OF THE NAVY
NAVAL FACILITIES ENGINEERING SYSTEMS COMMAND
MID-ATLANTIC
NAVAL FACILITIES ENGINEERING SYSTEMS COMMAND - MID-ATLANTIC
NAVAL STATION - NORFOLK, VA
NAVAL SUBMARINE BASE NEW LONDON
GROTON, CONNECTICUT
P-1102 WEAPONS MAGAZINE & ORDINANCE OPERATIONS FACILITY
CLWS MAGAZINE

EPDM COVER LAYOUT - SITE ADAPTED

SCALE: AS NOTED
EPROJECT NO.: 1667770
CONSTR. CONTR. NO.
NAVFAC DRAWING NO.
12894251
SHEET 8 OF 77

S-011S

FILE NAME: C:\pw_workdir\dms003\jcb2mhill_09050107\d1495963\S-011S.dwg LAYOUT NAME: S-011S PLOTTED: Friday, June 13, 2025 - 9:13am USER: 09050107

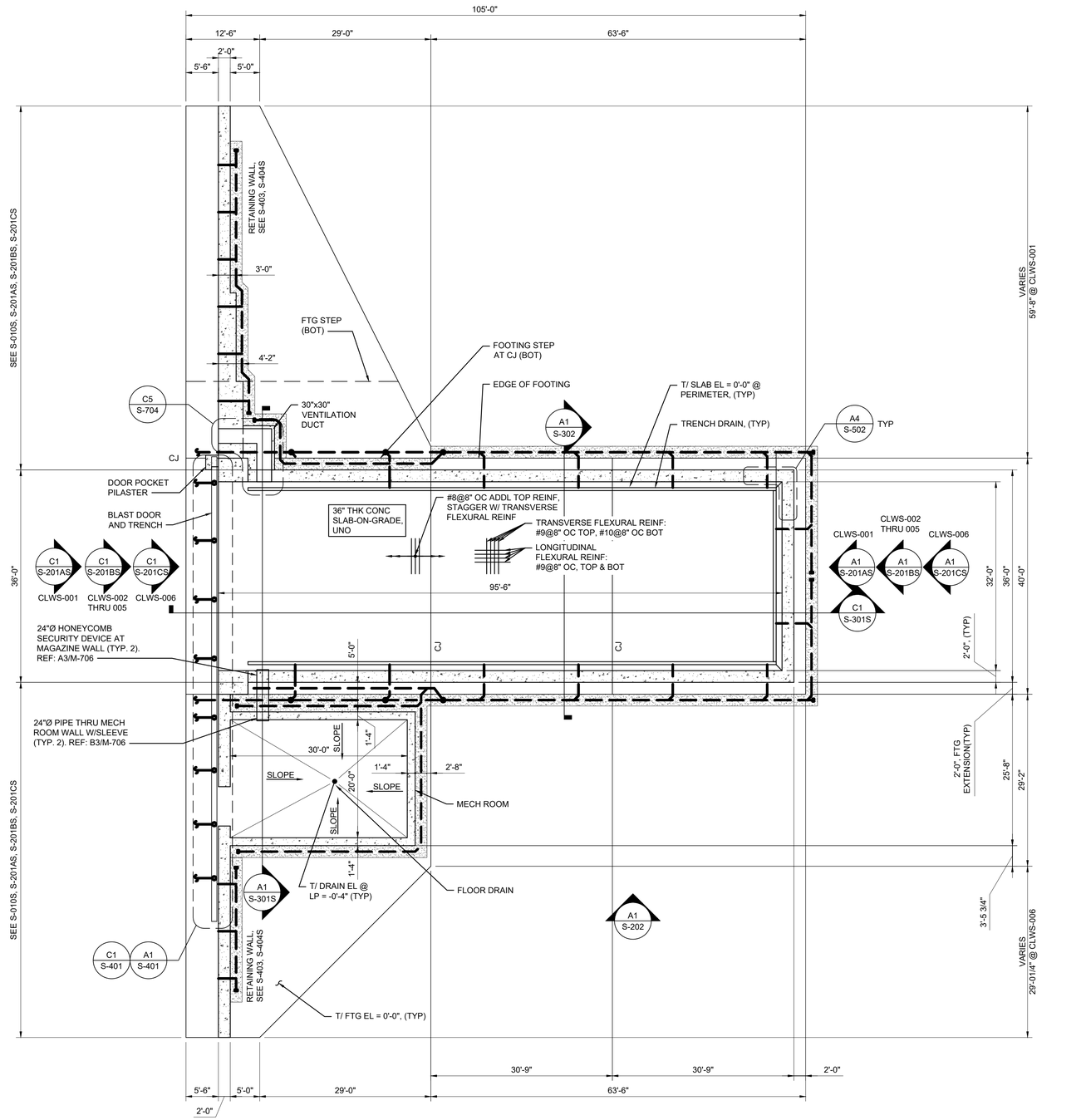

A2 FOUNDATION/ FLOOR PLAN
SCALE: 3/32" = 1'-0"

0 8' 16' 32'

SHEET NOTES

1. ALL ELEVATIONS ARE IN REFERENCE TO A DATUM ELEVATION OF 0'-0" FOR THE MAGAZINE FINISHED FLOOR ELEVATION. SEE CIVIL DRAWINGS FOR ACTUAL ELEVATIONS.
2. SEE SHEETS S-001, S-002, S-003, AND S-004S FOR GENERAL NOTES.
3. ALL REINFORCING STEEL MUST BE CONTINUOUSLY BONDED AND GROUNDED PER S-002 AND A1/E-504S
4. SLAB-ON-GRADE MUST BE MOIST CURED FOR A MINIMUM OF 14 DAYS.
5. SLAB-ON-GRADE CONSTRUCTION JOINTS ARE INDICATED AS "CJ" ON PLAN. SEE STANDARD DETAIL ON S-003 FOR CONSTRUCTION JOINT DETAILS.
6. BLAST DOOR IS NOT SHOWN FOR CLARITY.
7. SEE SHEET S-302 FOR ARRANGEMENT OF SLAB REINFORCEMENT AND FOR SIDEWALL REINFORCEMENT SIZE, SPACING, AND ARRANGEMENT.
8. SEE SHEET S-104 FOR FOUNDATION DRAINAGE FLOOR PLAN.
9. SEE CIVIL FOR EXTENTS OF RIGID INCLUSION GROUND IMPROVEMENT.

THESE DRAWINGS HAVE BEEN ADAPTED FROM APPROVED NAVFAC MUNITIONS STORAGE CONSTRUCTION DOCUMENTS, NAVFAC DRAWING NUMBERS 12877610 TO 12877660, APPROVED BY DDESB ON 20 MARCH 2023. JACOBS DOR RESPONSIBILITY AND SEAL APPLICABILITY IS LIMITED TO THE SITE ADAPTATIONS AND MODIFICATIONS MADE TO THIS DRAWING.

ORIGINAL STANDARD DRAWING IS NAVFAC DRAWING NUMBER 12877614 SHT 5 OF 51

SYM	DESCRIPTION	DATE	APPR

NAVFAC

LAURA ARICO PRESLEY
REGISTERED ENGINEER
AGRICULTURE
COMMERCE
No. 106582
STATE OF TENNESSEE
06/27/2025
SEAL

Jacobs
1100 NORTH GLEBE ROAD
SUITE 500
ARLINGTON, VIRGINIA 22201
571.218.1000
FAX: 571.218.1600
A/E INFO

APPROVED
FOR COMMANDER NAVFAC 8/14/2025
ACTIVITY
APPROVED BY LCDR ELIZABETH OLOKODE NAVFAC NLON FEAD DIRECTOR NEW LONDON, GROTON, CT
SATISFACTORY TO DATE 05/27/2025

DES JAF	DRW SFF	CHK TPH	
PM/DM	SMS/CWJ		
BRANCH MANAGER	NEK		
CHIEF ENG/ARCH	JWJ		
FIRE PROTECTION	HPN		

DEPARTMENT OF THE NAVY
NAVAL FACILITIES ENGINEERING SYSTEMS COMMAND - MID-ATLANTIC
NAVAL FACILITIES ENGINEERING SYSTEMS COMMAND
NAVAL STATION - NORFOLK, VA
NAVAL SUBMARINE BASE NEW LONDON
GROTON, CONNECTICUT
P-1102 WEAPONS MAGAZINE & ORDNANCE OPERATIONS FACILITY
CLWS MAGAZINE
FOUNDATION/ FLOOR PLAN

SCALE: AS NOTED
EPROJECT NO.: 1667770
CONSTR. CONTR. NO.
NAVFAC DRAWING NO. 12894252
SHEET 9 OF 77
S-101S

FILE NAME: C:\pw_workdir\pw003\ph2mhsl_09050107\d1495963\S-101S.dwg LAYOUT NAME: S-101S PLOTTED: Friday, June 13, 2025 - 9:13am USER: 09050107

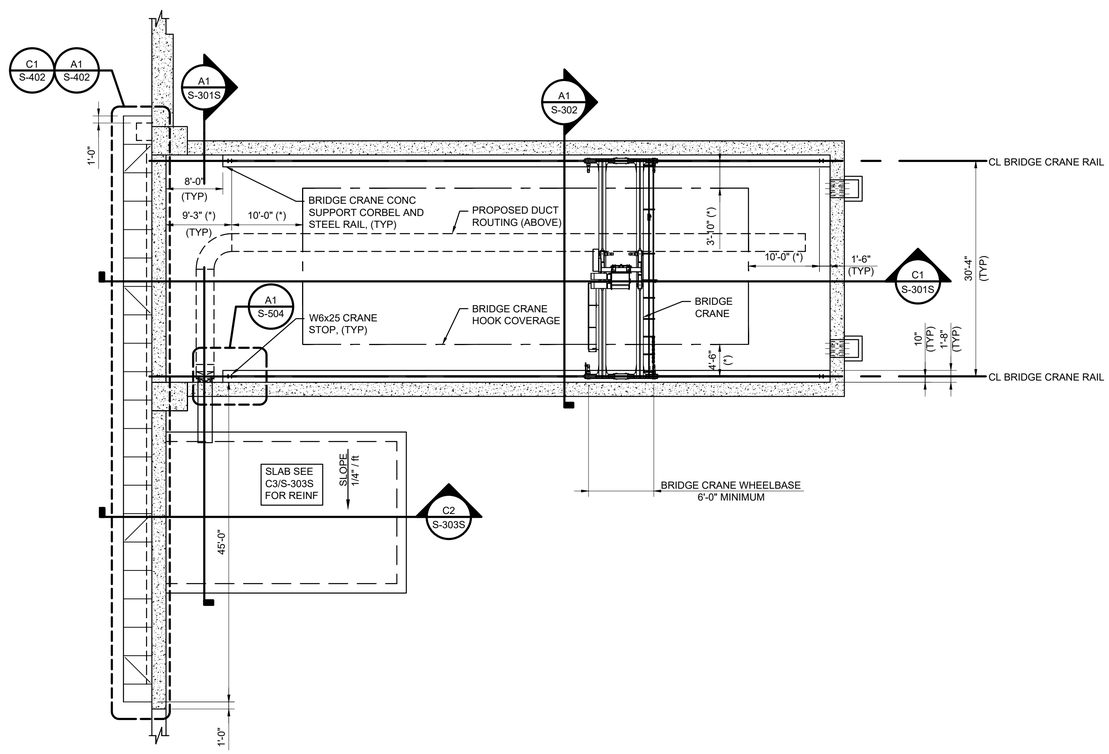

A2 BRIDGE CRANE AND CANOPY FRAMING PLAN
SCALE: 3/32" = 1'-0"

0 8' 16' 32'

SHEET NOTES

1. ALL ELEVATIONS ARE IN REFERENCE TO A DATUM ELEVATION OF 0'-0" FOR THE MAGAZINE FINISHED FLOOR ELEVATION. SEE CIVIL DRAWINGS FOR ACTUAL ELEVATIONS.

2. SEE SHEETS S-001, S-002, S-003, AND S-004S FOR GENERAL NOTES.

3. DIMENSIONS, ELEVATIONS, OR OTHER INFORMATION DESIGNATED WITH AN (*) MUST BE VERIFIED WITH SELECTED EQUIPMENT DIMENSION, REQUIRED CLEARANCES AND HOOK HEIGHTS.

4. BRIDGE CRANE MUST COMPLY WITH UFGS 41 22 13.15 AND MEET THE FOLLOWING REQUIREMENTS.
   - A. 25 TON CAPACITY
   - B. DOUBLE-GIRDER SYSTEM
   - C. MAXIMUM WHEEL LOAD = 37K
   - D. MINIMUM WHEELBASE = 6FT
   - E. MAXIMUM TOTAL WEIGHT = 40K
   - F. MAXIMUM HOIST AND TROLLEY WEIGHT = 10K
   - G. CMAA 70 CLASS D SERVICE
   - H. HOOK AND CRANE CLEARANCE REQUIREMENTS ON THIS SHEET AND ON A1/ S-302

5. BRIDGE CRANE RAIL MUST BE CONSTRUCTED TO RUNWAY TOLERANCES IN ACCORDANCE WITH CMAA SPECIFICATION #70. SEE DETAIL C4 ON SHEET S-303S. RAIL SPLICES AND SPLICE CONNECTIONS TO BE SELECTED AND LOCATED BY BRIDGE CRANE RAIL MANUFACTURER.

6. BRIDGE CRANE HOOK MUST BE SIZED TO APPROPRIATELY INTERFACE WITH CROSBY SHACKLE G213/S213, NOMINAL - SIZE 1 3/4", WORKING LOAD LIMIT 25 TON.

THESE DRAWINGS ARE AN EXACT REPLICA OF THE STANDARD MAGAZINE TYPE "CLWS" PROVIDED BY NAVFAC. THE DESIGN WILL BE SITE ADAPTED AND MODIFIED TO MEET THE SPECIFIC GEOTECHNICAL AND LOADING CONDITIONS SPECIFIC TO NAVAL SUBMARINE BASE NEW LONDON, GROTON, CONNECTICUT.

ORIGINAL STANDARD DRAWING IS NAVFAC DRAWING NUMBER 12877615 SHT 6 OF 51

SYM	DESCRIPTION	DATE	APPR.

NAVFAC

SEAL

Jacobs
1100 NORTH GLEBE ROAD
SUITE 500
ARLINGTON, VIRGINIA 22201
571.218.1000
FAX: 571.218.1600

A/E INFO

APPROVED
FOR COMMANDER NAVFAC
ACTIVITY
APPROVED BY LCDR ELIZABETH OLOKODE NAVFAC NLON FEAD DIRECTOR NEW LONDON, GROTON, CT
SATISFACTORY TO DATE 05/27/2025

DES JAF	DRW SFF	CHK TPH	
PM/DM	SMS/CWJ		
BRANCH MANAGER	NEK		
CHIEF ENG/ARCH	JWJ		
FIRE PROTECTION	HPN		

DEPARTMENT OF THE NAVY
NAVAL FACILITIES ENGINEERING SYSTEMS COMMAND
MID-ATLANTIC
NAVAL FACILITIES ENGINEERING SYSTEMS COMMAND - MID-ATLANTIC
NAVAL STATION - NORFOLK, VA
NAVAL SUBMARINE BASE NEW LONDON
GROTON, CONNECTICUT
P-1102 WEAPONS MAGAZINE & ORDNANCE OPERATIONS FACILITY
CLWS MAGAZINE
BRIDGE CRANE AND CANOPY FRAMING PLAN

SCALE: AS NOTED
EPROJECT NO.: 1667770
CONSTR. CONTR. NO.
NAVFAC DRAWING NO. 12894253
SHEET 10 OF 77
S-102

FILE NAME: C:\pw_workdir\dms0031\ch2mhill_09050107\d1495963\S-102.dwg LAYOUT NAME: S-102 PLOTTED: Friday, June 13, 2025 - 9:13am USER: 09050107

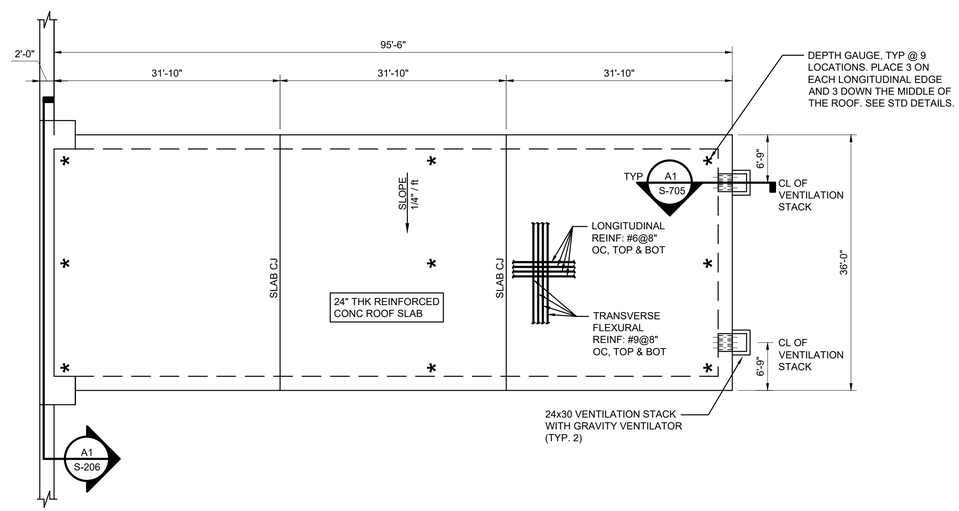

A2 ROOF FRAMING PLAN
SCALE: 3/32" = 1'-0"

0 8' 16' 32'

SHEET NOTES

1. ALL ELEVATIONS ARE IN REFERENCE TO A DATUM ELEVATION OF 0'-0" FOR THE MAGAZINE FINISHED FLOOR ELEVATION. SEE CIVIL DRAWINGS FOR ACTUAL ELEVATIONS.
2. SEE SHEETS S-001, S-002, S-003, AND S-004S FOR GENERAL NOTES.
3. ALL REINFORCING STEEL MUST BE CONTINUOUSLY BONDED AND GROUNDED PER S-002 AND A1/E-504.
4. CONCRETE SLAB MUST BE MOIST CURED FOR A MINIMUM OF 14 DAYS.
5. SEE S-003 FOR CONCRETE SLAB CONSTRUCTION JOINT DETAILS.

THESE DRAWINGS ARE AN EXACT REPLICA OF THE STANDARD MAGAZINE TYPE "CLWS" PROVIDED BY NAVFAC. THE DESIGN WILL BE SITE ADAPTED AND MODIFIED TO MEET THE SPECIFIC GEOTECHNICAL AND LOADING CONDITIONS SPECIFIC TO NAVAL SUBMARINE BASE NEW LONDON, GROTON, CONNECTICUT.

ORIGINAL STANDARD DRAWING IS NAVFAC DRAWING NUMBER 12877616 SHT 7 OF 51

SYM	DESCRIPTION	DATE	APPR

SEAL

Jacobs
1100 NORTH GLEBE ROAD
SUITE 500
ARLINGTON, VIRGINIA 22201
571.218.1000
FAX: 571.218.1600

A/E INFO

APPROVED
FOR COMMANDER NAVFAC 8/14/2025

ACTIVITY
APPROVED BY LCDR ELIZABETH OLOKODE NAVFAC NLON FEAD DIRECTOR NEW LONDON, GROTON, CT
SATISFACTORY TO DATE 05/27/2025

DES	JAF	DRW	SFF	CHK	TPH
PM/DM	SMS/CWJ				
BRANCH MANAGER	NEK				
CHIEF ENG/ARCH	JWJ				
FIRE PROTECTION	HPN				

DEPARTMENT OF THE NAVY
NAVAL FACILITIES ENGINEERING SYSTEMS COMMAND
MID-ATLANTIC
NAVAL FACILITIES ENGINEERING SYSTEMS COMMAND - MID-ATLANTIC
NAVAL STATION - NORFOLK, VA
NAVAL SUBMARINE BASE NEW LONDON
GROTON, CONNECTICUT
P-1102 WEAPONS MAGAZINE & ORDNANCE OPERATIONS FACILITY
CLWS MAGAZINE
ROOF FRAMING PLAN

SCALE: AS NOTED
EPROJECT NO.: 1667770
CONSTR. CONTR. NO.
NAVFAC DRAWING NO. 12894254
SHEET 11 OF 77
S-103

FILE NAME: C:\pw_workdir\dms0033\ch2mhill_09050107\u1492963\S-103.dwg LAYOUT NAME: S-103 PLOTTED: Friday, June 13, 2025 - 9:13pm USER: 09050107

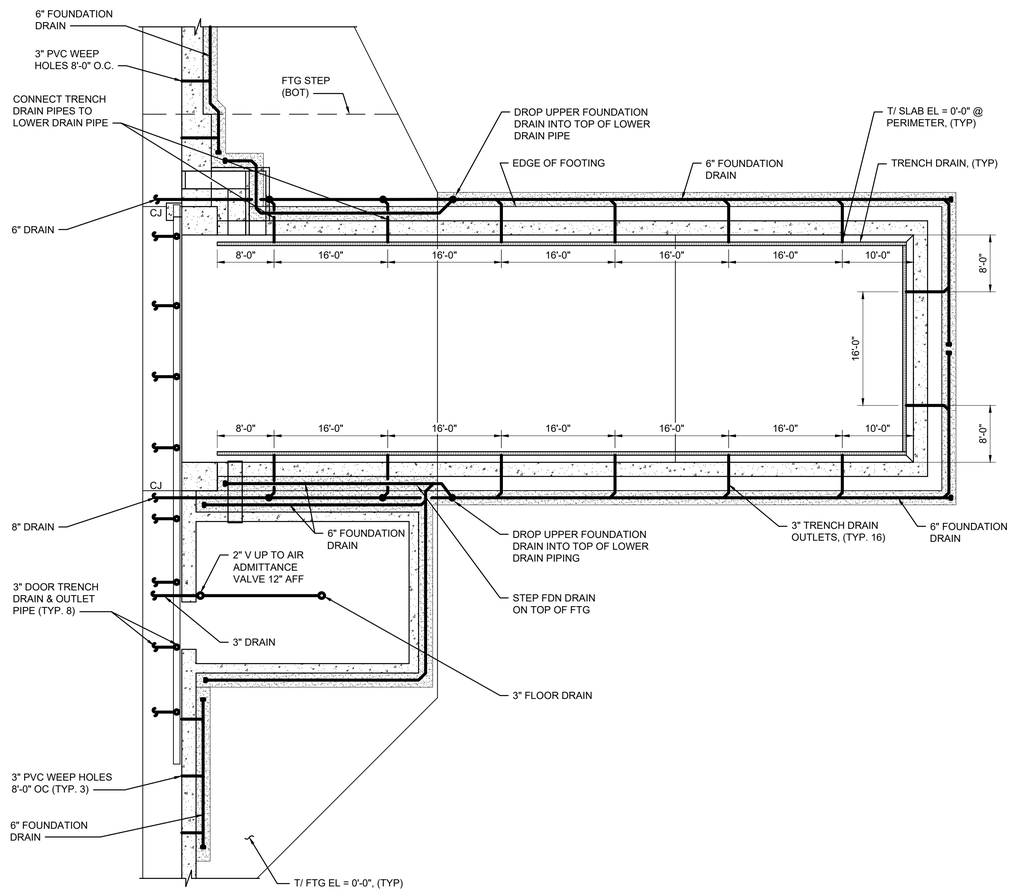

A2 FOUNDATION DRAINAGE FLOOR PLAN
SCALE: 3/32" = 1'-0"

0 8' 16' 32'

SHEET NOTES

1. ALL ELEVATIONS ARE IN REFERENCE TO A DATUM ELEVATION OF 0'-0" FOR THE MAGAZINE FINISHED FLOOR ELEVATION. SEE CIVIL DRAWINGS FOR ACTUAL ELEVATIONS.
2. SEE SHEETS S-001, S-002, S-003, AND S-004S FOR GENERAL NOTES.
3. ALL REINFORCING STEEL MUST BE CONTINUOUSLY BONDED AND GROUNDED PER S-002 AND A1/E-504
4. SLAB-ON-GRADE MUST BE MOIST CURED FOR A MINIMUM OF 14 DAYS.
5. BLAST DOOR IS NOT SHOWN FOR CLARITY.
6. SEE SHEET S-302 FOR ARRANGEMENT OF SLAB REINFORCEMENT AND FOR SIDEWALL REINFORCEMENT SIZE, SPACING, AND ARRANGEMENT.
7. REFER TO S-706 FOR DRAINAGE ISOMETRIC DIAGRAM
8. FINAL PIPING CONFIGURATION AND TERMINATION POINTS PER SITE-ADAPT ENGINEER.

THESE DRAWINGS HAVE BEEN ADAPTED FROM APPROVED NAVFAC MUNITIONS STORAGE CONSTRUCTION DOCUMENTS, NAVFAC DRAWING NUMBERS 12877610 TO 12877660, APPROVED BY DDESB ON 20 MARCH 2023. JACOBS DOR RESPONSIBILITY AND SEAL APPLICABILITY IS LIMITED TO THE SITE ADAPTATIONS AND MODIFICATIONS MADE TO THIS DRAWING.

ORIGINAL STANDARD DRAWING IS NAVFAC DRAWING NUMBER 12877617 SHT 8 OF 51

SYM	DESCRIPTION	DATE	APPR

NAVFAC

LAURA ARICO PRESLEY
REGISTERED ENGINEER
AGRICULTURE
COMMERCE
No. 106382
STATE OF TENNESSEE
06/27/2025
SEAL

Jacobs
1100 NORTH GLEBE ROAD
SUITE 500
ARLINGTON, VIRGINIA 22201
571.218.1000
FAX: 571.218.1600
A/E INFO

APPROVED
FOR COMMANDER NAVFAC 8/14/2025
ACTIVITY
APPROVED BY LCDR ELIZABETH OLOKODE NAVFAC NLON FEAD DIRECTOR NEW LONDON, GROTON, CT
SATISFACTORY TO DATE 05/27/2025

DES JAF	DRW SFF	CHK TPH	
PM/DM			SMS/CWJ
BRANCH MANAGER			NEK
CHIEF ENG/ARCH			JWJ
FIRE PROTECTION			HPN

DEPARTMENT OF THE NAVY
NAVAL FACILITIES ENGINEERING SYSTEMS COMMAND
MID-ATLANTIC
NAVAL FACILITIES ENGINEERING SYSTEMS COMMAND - MID-ATLANTIC
NAVAL STATION - NORFOLK, VA
NAVAL SUBMARINE BASE NEW LONDON
GROTON, CONNECTICUT
P-1102 WEAPONS MAGAZINE & ORDNANCE OPERATIONS FACILITY
CLWS MAGAZINE
FOUNDATION DRAINAGE PLAN

SCALE: NONE
EPROJECT NO.: 1667770
CONSTR. CONTR. NO.
NAVFAC DRAWING NO. 12894255
SHEET 12 OF 77
S-104S

FILE NAME: C:\pw_work\dir\dev003\jx2mhill_09050107\d1495963\S-1045.dwg LAYOUT NAME: S-104S PLOTTED: Friday, June 13, 2025 - 9:14am USER: 09050107

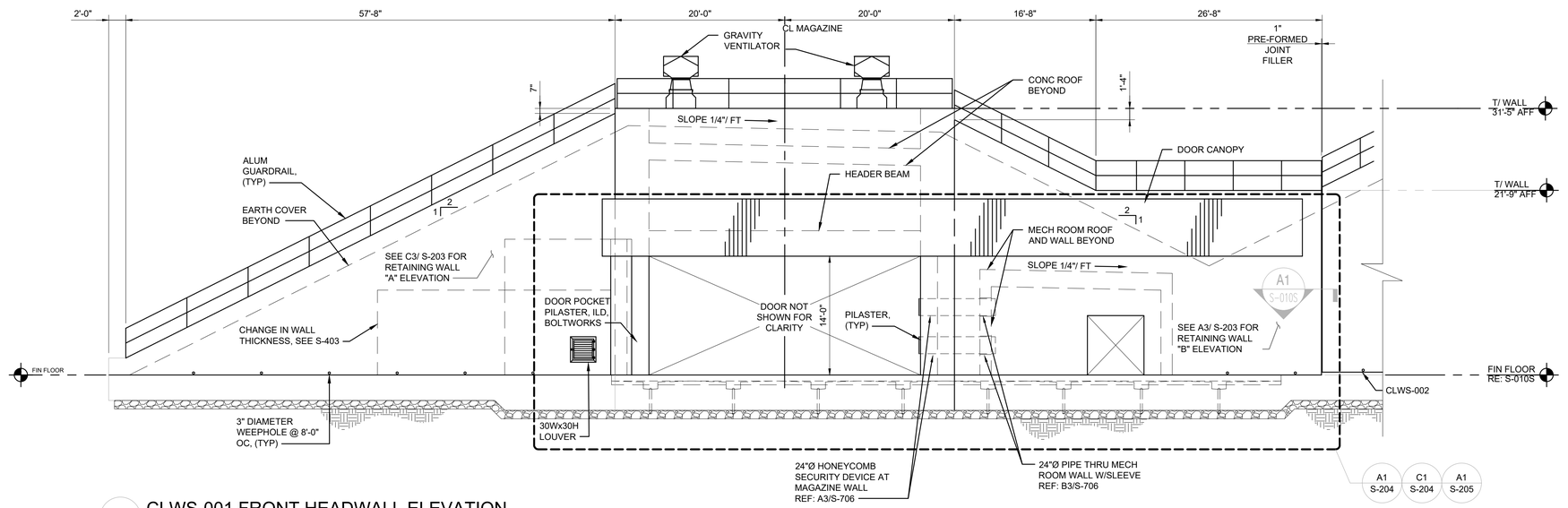

C1 CLWS-001 FRONT HEADWALL ELEVATION
SCALE: 1/8" = 1'-0'

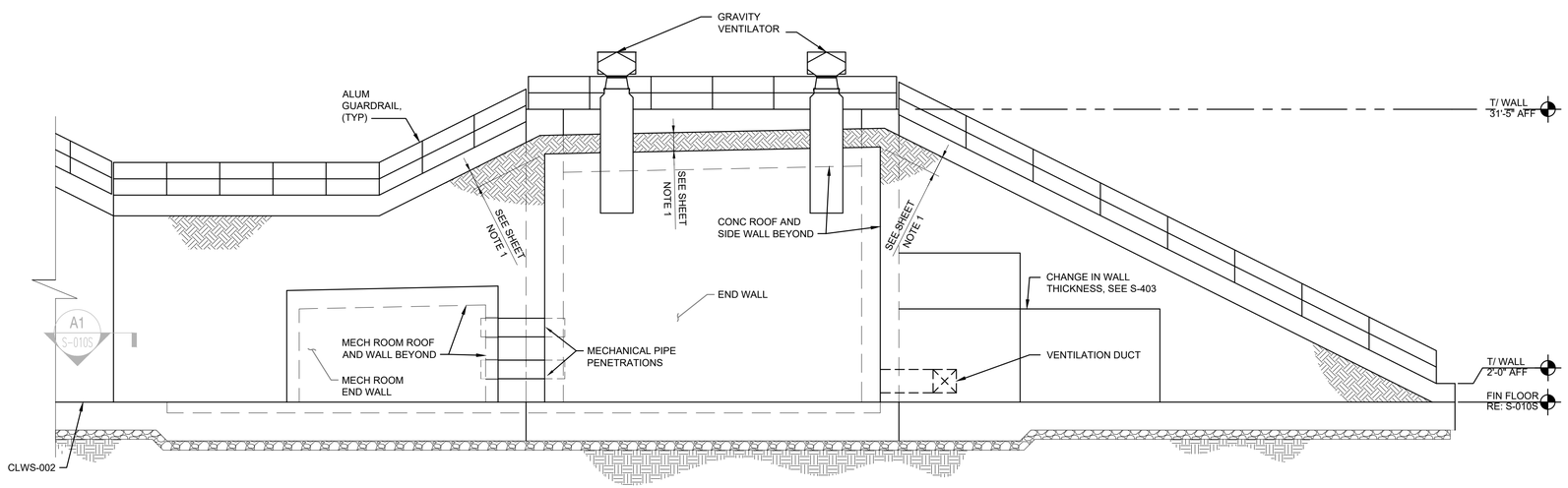

A1 CLWS-001 REAR ELEVATION
SCALE: 1/8" = 1'-0'

SHEET NOTES

1. PROVIDE 2'-0" OF FILL (MINIMUM OF 1'-6" OF EARTH COVER MATERIAL PLUS 6" OF SAND MATERIAL AS REQUIRED PER FOUNDATION GENERAL NOTES ON S-001) TO ANY EXTERIOR EDGE OF THE MAGAZINE (ROOF PANEL, SIDE WALL, REAR WALL).

THESE DRAWINGS HAVE BEEN ADAPTED FROM APPROVED NAVFAC MUNITIONS STORAGE CONSTRUCTION DOCUMENTS, NAVFAC DRAWING NUMBERS 12877610 TO 12877660, APPROVED BY DDESB ON 20 MARCH 2023. JACOBS DOR RESPONSIBILITY AND SEAL APPLICABILITY IS LIMITED TO THE SITE ADAPTATIONS AND MODIFICATIONS MADE TO THIS DRAWING.

ORIGINAL STANDARD DRAWING IS NAVFAC DRAWING NUMBER 12877618 SHT 9 OF 51

SYM	DESCRIPTION	DATE	APPR

NAVFAC

LAURA ARICO PRESLEY, REGISTERED ENGINEER, AGRICULTURE, COMMERCE, No. 106382, STATE OF TENNESSEE
06/11/2025
SEAL

Jacobs
1100 NORTH GLEBE ROAD
SUITE 500
ARLINGTON, VIRGINIA 22201
571.218.1000
FAX: 571.218.1600

A/E INFO

APPROVED
FOR COMMANDER NAVFAC
ACTIVITY
APPROVED BY LCDR ELIZABETH OLOKODE NAVFAC NLON FEAD DIRECTOR NEW LONDON, GROTON, CT
SATISFACTORY TO DATE 05/27/2025

DES	SB	DRW JC	CHK LAP
PM/DM	SMS/CWJ		
BRANCH MANAGER	NEK		
CHIEF ENG/ARCH	JWJ		
FIRE PROTECTION	HPN		

DEPARTMENT OF THE NAVY
NAVAL FACILITIES ENGINEERING SYSTEMS COMMAND - MID-ATLANTIC
NAVAL FACILITIES ENGINEERING SYSTEMS COMMAND
MID-ATLANTIC
NAVAL STATION - NORFOLK, VA
NAVAL SUBMARINE BASE NEW LONDON
GROTON, CONNECTICUT
P-1102 WEAPONS MAGAZINE & ORDNANCE OPERATIONS FACILITY
CLWS MAGAZINE
CLWS-001 BUILDING ELEVATIONS - 1 - SITE ADAPTED

SCALE: NONE
EPROJECT NO.: 1667770
CONSTR. CONTR. NO.
NAVFAC DRAWING NO. 12894256
SHEET 13 OF 77
S-201AS

FILE NAME: C:\pw_workdir\dms0031\ch2mhill_09050107\d1495963\S-201AS.dwg LAYOUT NAME: S-201AS PLOTTED: Friday, June 13, 2025 - 9:14am USER: 09050107

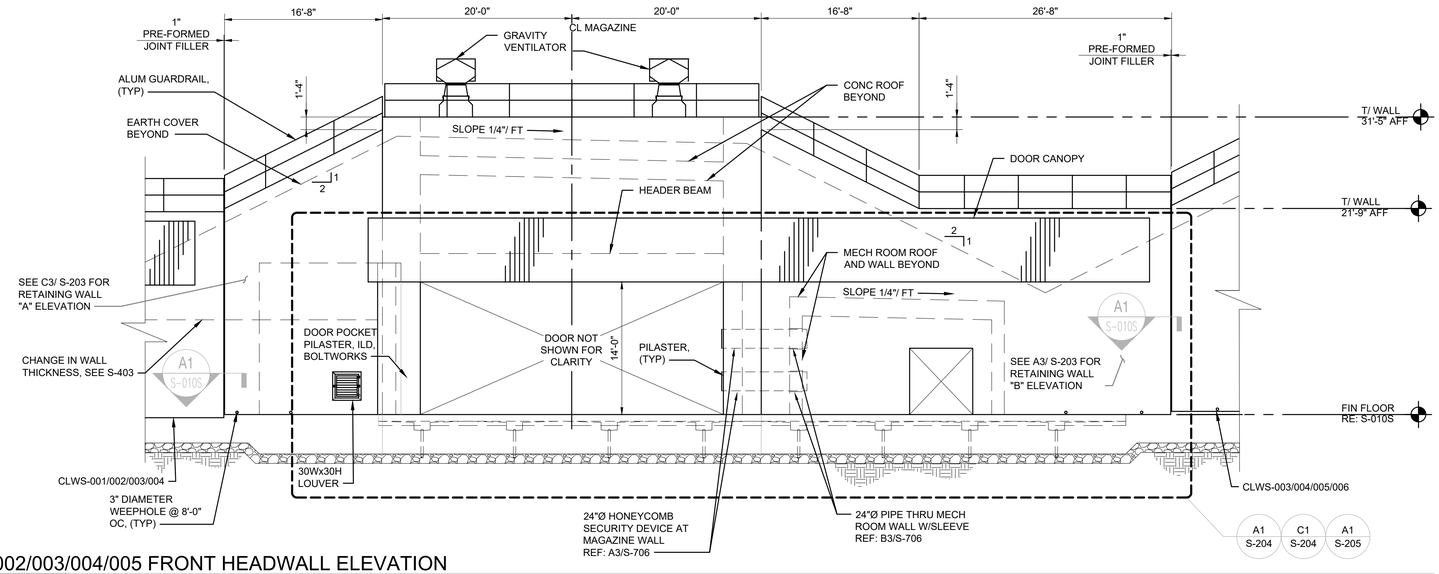

C1 CLWS-002/003/004/005 FRONT HEADWALL ELEVATION
SCALE: 1/8" = 1'-0'

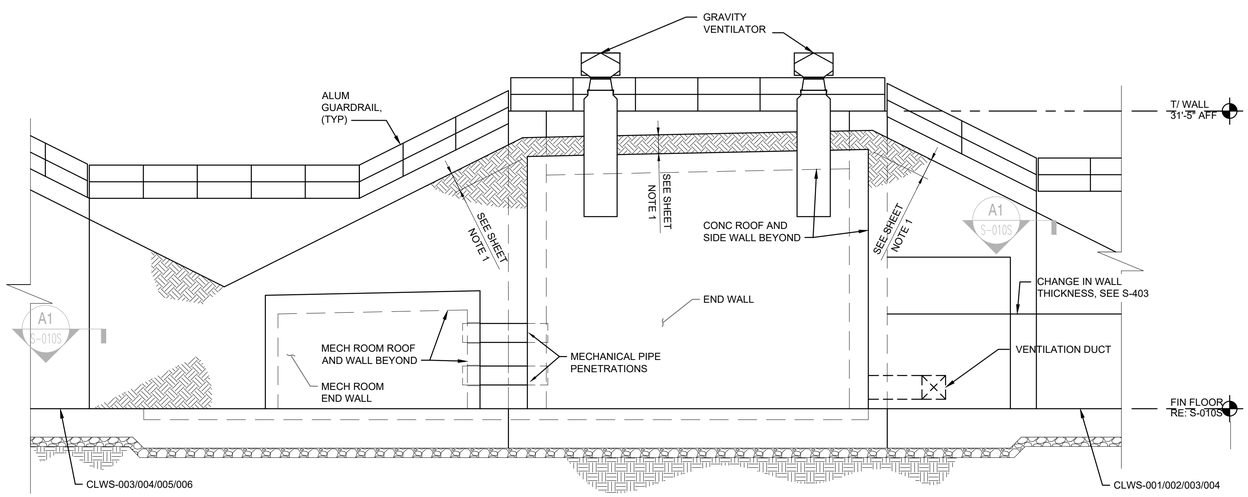

A1 CLWS-002/003/004/005 REAR ELEVATION
SCALE: 1/8" = 1'-0'

SHEET NOTES

1. PROVIDE 2'-0" OF FILL (MINIMUM OF 1'-6" OF EARTH COVER MATERIAL PLUS 6" OF SAND MATERIAL AS REQUIRED PER FOUNDATION GENERAL NOTES ON S-001) TO ANY EXTERIOR EDGE OF THE MAGAZINE (ROOF PANEL, SIDE WALL, REAR WALL).

THESE DRAWINGS HAVE BEEN ADAPTED FROM APPROVED NAVFAC MUNITIONS STORAGE CONSTRUCTION DOCUMENTS, NAVFAC DRAWING NUMBERS 12877610 TO 12877660, APPROVED BY DDESB ON 20 MARCH 2023. JACOBS DOR RESPONSIBILITY AND SEAL APPLICABILITY IS LIMITED TO THE SITE ADAPTATIONS AND MODIFICATIONS MADE TO THIS DRAWING.

ORIGINAL STANDARD DRAWING IS NAVFAC DRAWING NUMBER 12877618 SHT 9 OF 51

SYM	DESCRIPTION	DATE	APPR

NAVFAC

LAURA ARICO PRESLEY, REGISTERED ENGINEER, AGRICULTURE, COMMERCE, No. 106382, STATE OF TENNESSEE
06/27/2025
SEAL

Jacobs
1100 NORTH GLEBE ROAD
SUITE 500
ARLINGTON, VIRGINIA 22201
571.218.1000
FAX: 571.218.1600

A/E INFO

APPROVED
FOR COMMANDER NAVFAC 8/14/2025

ACTIVITY
APPROVED BY LCDR ELIZABETH OLOKODE NAVFAC NLON FEAD DIRECTOR NEW LONDON, GROTON, CT
SATISFACTORY TO DATE 05/27/2025

DES	SB	DRW	JC	CHK	LAP
PM/DM	SMS/CWJ				
BRANCH MANAGER	NEK				
CHIEF ENG/ARCH	JWJ				
FIRE PROTECTION	HPN				

DEPARTMENT OF THE NAVY
NAVAL FACILITIES ENGINEERING SYSTEMS COMMAND
MID-ATLANTIC
NAVAL FACILITIES ENGINEERING SYSTEMS COMMAND - MID-ATLANTIC
NAVAL STATION - NORFOLK, VA
NAVAL SUBMARINE BASE NEW LONDON
GROTON, CONNECTICUT
P-1102 WEAPONS MAGAZINE & ORDNANCE OPERATIONS FACILITY
CLWS MAGAZINE
CLWS-002/003/004/005 BUILDING ELEVATIONS - 1 - SITE ADAPTED

SCALE: NONE
EPROJECT NO.: 1667770
CONSTR. CONTR. NO.
NAVFAC DRAWING NO. 12894257
SHEET 14 OF 77
S-201BS

FILE NAME: C:\pw_workdir\dms003\ph2mhill_09050107\d1495963\S-201BS.dwg LAYOUT NAME: S-201BS PLOTTED: Friday, June 13, 2025 - 9:14am USER: 09050107

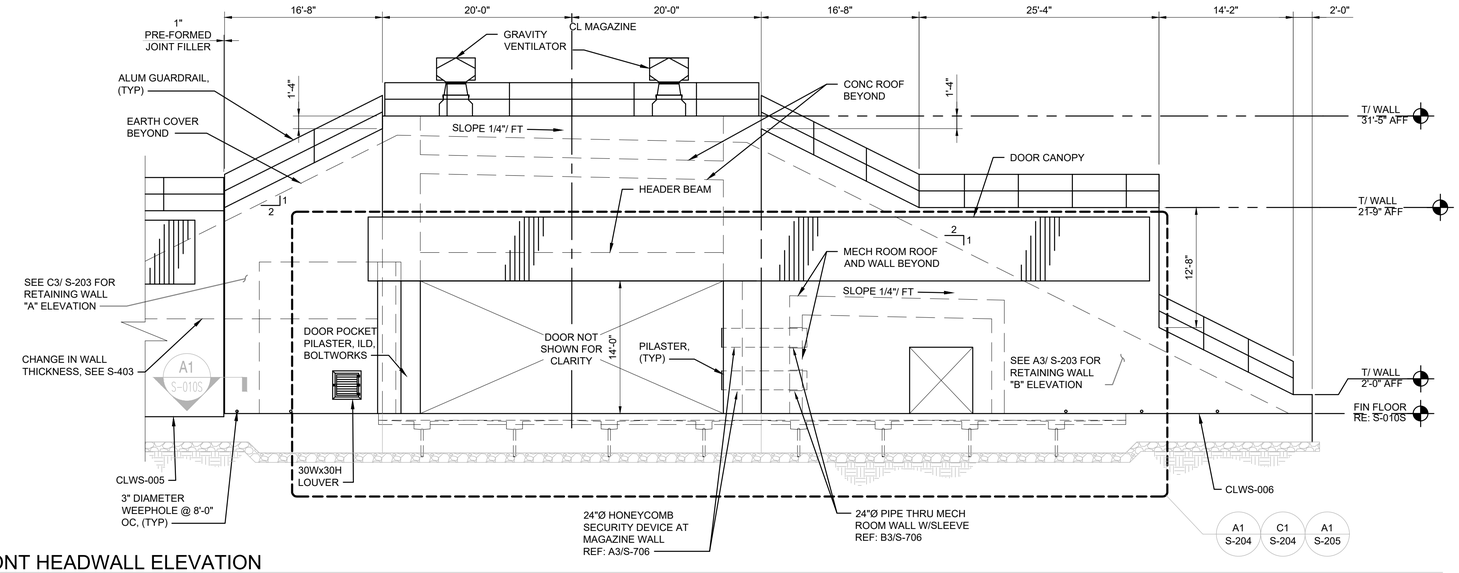

C1 CLWS-006 FRONT HEADWALL ELEVATION
SCALE: 1/8" = 1'-0'

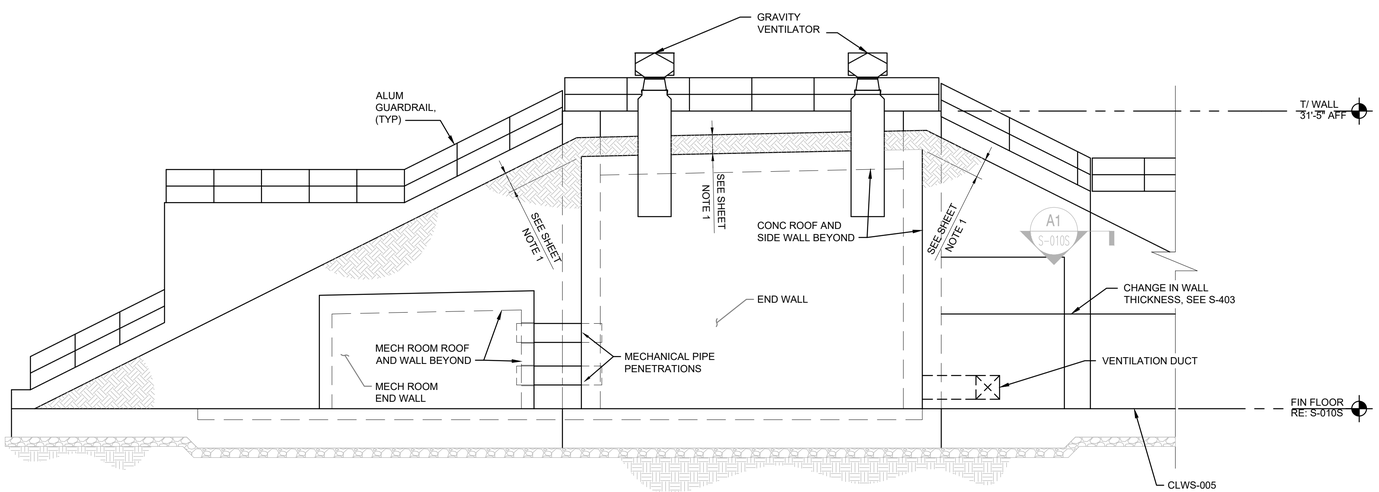

A1 CLWS-006 REAR ELEVATION
SCALE: 1/8" = 1'-0'

SHEET NOTES

1. PROVIDE 2'-0" OF FILL (MINIMUM OF 1'-6" OF EARTH COVER MATERIAL PLUS 6" OF SAND MATERIAL AS REQUIRED PER FOUNDATION GENERAL NOTES ON S-001) TO ANY EXTERIOR EDGE OF THE MAGAZINE (ROOF PANEL, SIDE WALL, REAR WALL).

THESE DRAWINGS HAVE BEEN ADAPTED FROM APPROVED NAVFAC MUNITIONS STORAGE CONSTRUCTION DOCUMENTS, NAVFAC DRAWING NUMBERS 12877610 TO 12877660, APPROVED BY DDESB ON 20 MARCH 2023. JACOBS DOR RESPONSIBILITY AND SEAL APPLICABILITY IS LIMITED TO THE SITE ADAPTATIONS AND MODIFICATIONS MADE TO THIS DRAWING.

ORIGINAL STANDARD DRAWING IS NAVFAC DRAWING NUMBER 12877618 SHT 9 OF 51

SYM	DESCRIPTION	DATE	APPR

NAVFAC

LAURA ARICO PRESLEY REGISTERED ENGINEER AGRICULTURE COMMERCE No. 105382 STATE OF TENNESSEE 06/27/2025
SEAL

Jacobs
1100 NORTH GLEBE ROAD
SUITE 500
ARLINGTON, VIRGINIA 22201
571.218.1000
FAX: 571.218.1600

A/E INFO

APPROVED
FOR COMMANDER NAVFAC 6/16/2025

ACTIVITY
APPROVED BY LCDR ELIZABETH OLOKODE NAVFAC NLON FEAD DIRECTOR NEW LONDON, GROTON, CT
SATISFACTORY TO DATE 05/27/2025

DES	SB	DRW JC	CHK LAP
PM/DM	SMS/CWJ		
BRANCH MANAGER	NEK		
CHIEF ENG/ARCH	JWJ		
FIRE PROTECTION	HPN		

DEPARTMENT OF THE NAVY
NAVAL FACILITIES ENGINEERING SYSTEMS COMMAND
MID-ATLANTIC
NAVAL FACILITIES ENGINEERING SYSTEMS COMMAND - MID-ATLANTIC
NAVAL STATION - NORFOLK, VA
NAVAL SUBMARINE BASE NEW LONDON
GROTON, CONNECTICUT
P-1102 WEAPONS MAGAZINE & ORDNANCE OPERATIONS FACILITY
CLWS MAGAZINE
CLWS-006 BUILDING ELEVATIONS - 1 - SITE ADAPTED

SCALE: NONE
EPROJECT NO.: 1667770
CONSTR. CONTR. NO.
NAVFAC DRAWING NO. 12894258
SHEET 15 OF 77

S-201CS

FILE NAME: C:\pw_workdir\dms0031\ch2mhill_09050107\d1495963\S-201CS.dwg LAYOUT NAME: S-201CS PLOTTED: Friday, June 13, 2025 - 8:14am USER: 09050107

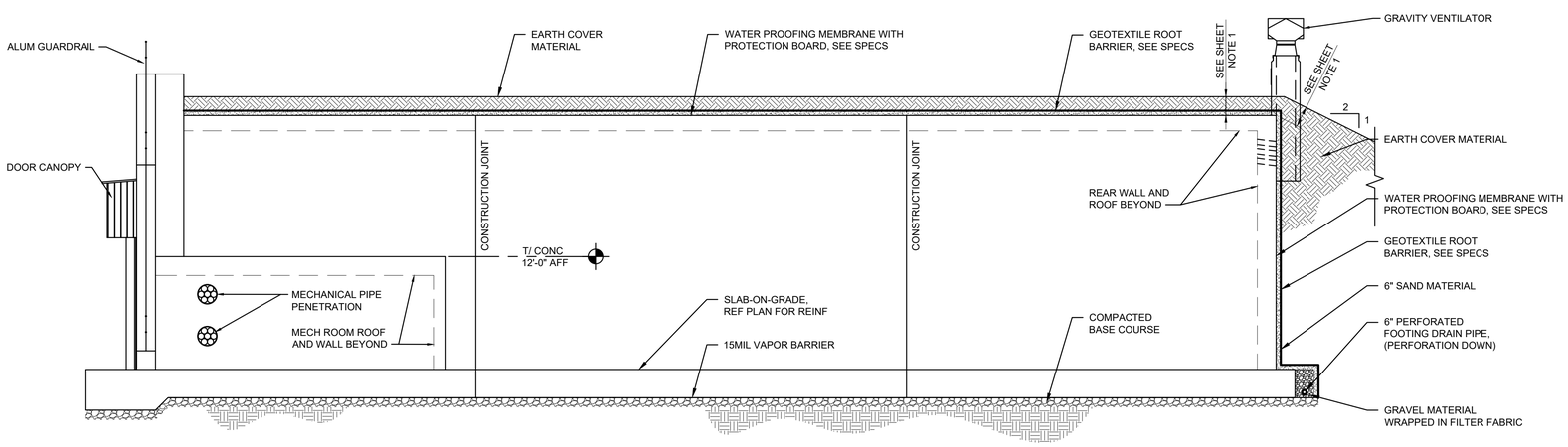

A1 SIDE ELEVATION
SCALE: 1/8" = 1'-0"

0 4' 8' 16'

SHEET NOTES

1. PROVIDE 2'-0" OF FILL (MINIMUM OF 1'-6" OF EARTH COVER MATERIAL PLUS 6" OF SAND MATERIAL AS REQUIRED PER FOUNDATION GENERAL NOTES ON S-001) TO ANY EXTERIOR EDGE OF THE MAGAZINE (ROOF PANEL, SIDE WALL, REAR WALL).

THESE DRAWINGS ARE AN EXACT REPLICA OF THE STANDARD MAGAZINE TYPE "CLWS" PROVIDED BY NAVFAC. THE DESIGN WILL BE SITE ADAPTED AND MODIFIED TO MEET THE SPECIFIC GEOTECHNICAL AND LOADING CONDITIONS SPECIFIC TO NAVAL SUBMARINE BASE NEW LONDON, GROTON, CONNECTICUT.

ORIGINAL STANDARD DRAWING IS NAVFAC DRAWING NUMBER 12877619 SHT 10 OF 51

SYM	DESCRIPTION	DATE	APPR

NAVFAC

SEAL

Jacobs
1100 NORTH GLEBE ROAD
SUITE 500
ARLINGTON, VIRGINIA 22201
571.218.1000
FAX: 571.218.1600

A/E INFO

APPROVED
FOR COMMANDER NAVFAC 8/14/2025

ACTIVITY
APPROVED BY LCDR ELIZABETH OLOKODE NAVFAC NLON FEAD DIRECTOR NEW LONDON, GROTON, CT
SATISFACTORY TO DATE 05/27/2025

DES	JAF	DRW	SFF	CHK	TPH
PM/DM	SMS/CWJ				
BRANCH MANAGER	NEK				
CHIEF ENG/ARCH	JWJ				
FIRE PROTECTION	HPN				

DEPARTMENT OF THE NAVY
NAVAL FACILITIES ENGINEERING SYSTEMS COMMAND
MID-ATLANTIC
NAVAL FACILITIES ENGINEERING SYSTEMS COMMAND - MID-ATLANTIC
NAVAL STATION - NORFOLK, VA
NAVAL SUBMARINE BASE NEW LONDON
GROTON, CONNECTICUT
P-1102 WEAPONS MAGAZINE & ORDNANCE OPERATIONS FACILITY
CLWS MAGAZINE

BUILDING ELEVATIONS – 2

SCALE: NONE
EPROJECT NO.: 1667770
CONSTR. CONTR. NO.
NAVFAC DRAWING NO.
12894259
SHEET 16 OF 77

S-202

FILE NAME: C:\pw_workdir\dms003\jacobs\d1495963\S-202.dwg LAYOUT NAME: S-202 PLOTTED: Friday, June 13, 2025 – 9:15am USER: 09050107

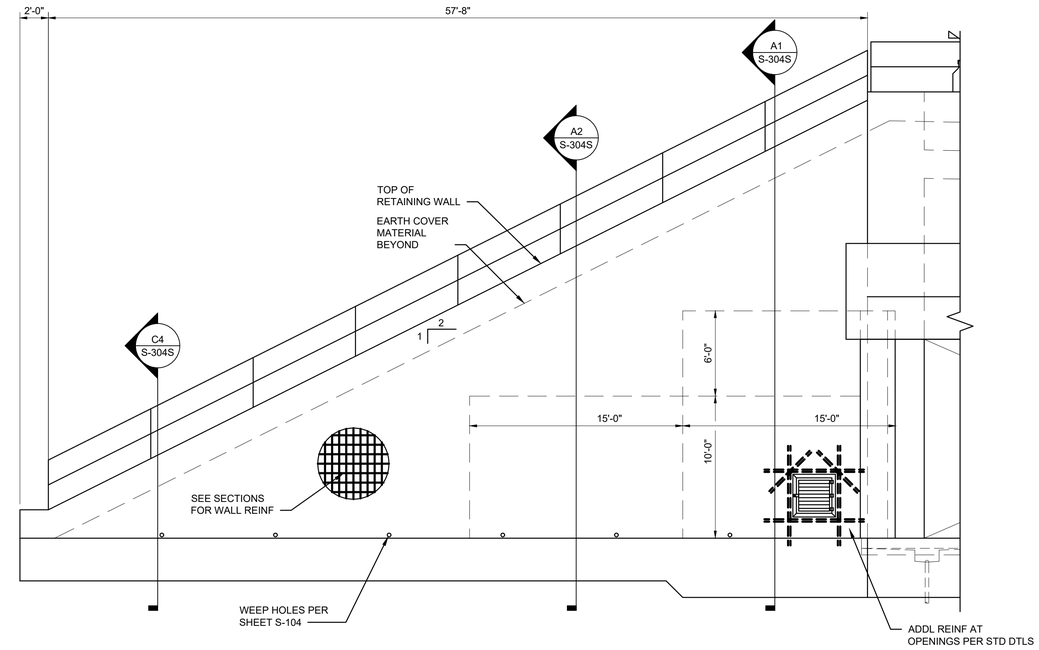

C3 RETAINING WALL "A" ELEVATION
SCALE: 3/16" = 1'-0'
0 4' 8' 16'

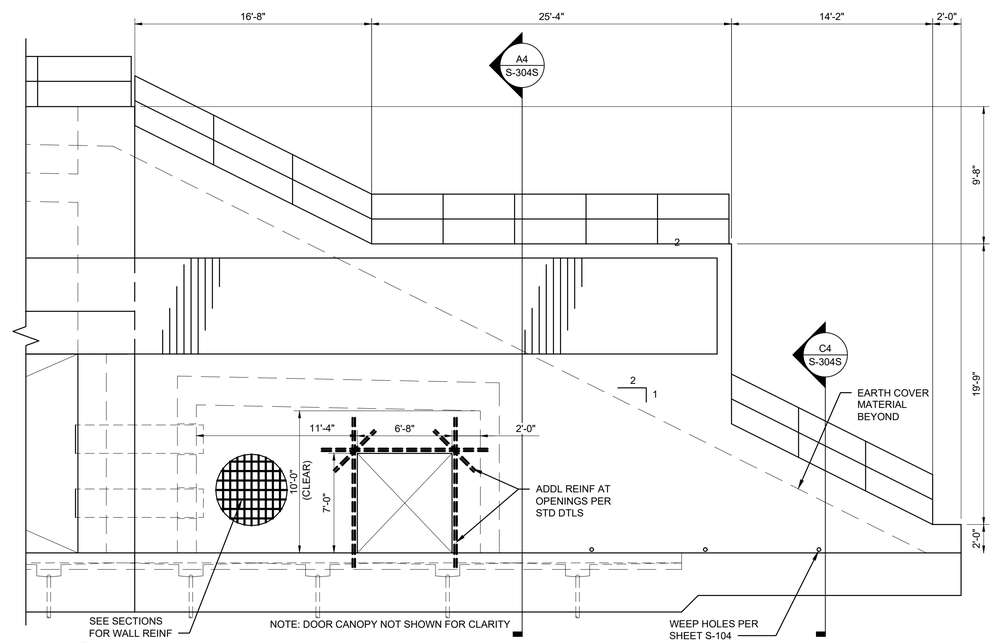

A3 RETAINING WALL "B" ELEVATION
SCALE: 3/16" = 1'-0'
SIMILAR AT RETAINING WALL "C"
0 4' 8' 16'

THESE DRAWINGS ARE AN EXACT REPLICA OF THE STANDARD MAGAZINE TYPE "CLWS" PROVIDED BY NAVFAC. THE DESIGN WILL BE SITE ADAPTED AND MODIFIED TO MEET THE SPECIFIC GEOTECHNICAL AND LOADING CONDITIONS SPECIFIC TO NAVAL SUBMARINE BASE NEW LONDON, GROTON, CONNECTICUT.

ORIGINAL STANDARD DRAWING IS NAVFAC DRAWING NUMBER 12877620 SHT 11 OF 51

SYM	DESCRIPTION	DATE	APPR.

NAVFAC

SEAL

Jacobs
1100 NORTH GLEBE ROAD
SUITE 500
ARLINGTON, VIRGINIA 22201
571.218.1000
FAX: 571.218.1600

A/E INFO

APPROVED
FOR COMMANDER NAVFAC 8/4/2025

ACTIVITY
APPROVED BY LCDR ELIZABETH OLOKODE NAVFAC NLON FEAD DIRECTOR NEW LONDON, GROTON, CT
SATISFACTORY TO DATE 05/27/2025

DES JAF	DRW SFF	CHK TPH	
PM/DM	SMS/CWJ		
BRANCH MANAGER	NEK		
CHIEF ENG/ARCH	JWJ		
FIRE PROTECTION	HPN		

DEPARTMENT OF THE NAVY
NAVAL FACILITIES ENGINEERING SYSTEMS COMMAND
MID-ATLANTIC
NAVAL FACILITIES ENGINEERING SYSTEMS COMMAND - MID-ATLANTIC
NAVAL STATION - NORFOLK, VA
NAVAL SUBMARINE BASE NEW LONDON
GROTON, CONNECTICUT
P-1102 WEAPONS MAGAZINE & ORDNANCE OPERATIONS FACILITY
CLWS MAGAZINE
RETAINING WALL ELEVATIONS

SCALE: NONE
EPROJECT NO.: 1667770
CONSTR. CONTR. NO.
NAVFAC DRAWING NO. 12894260
SHEET 17 OF 77
S-203

FILE NAME: C:\pw_workdir\dms003\ph2mhill_09050107\d1495963\S-203.dwg LAYOUT NAME: S-203 PLOTTED: Friday, June 13, 2025 - 9:15am USER: 09050107

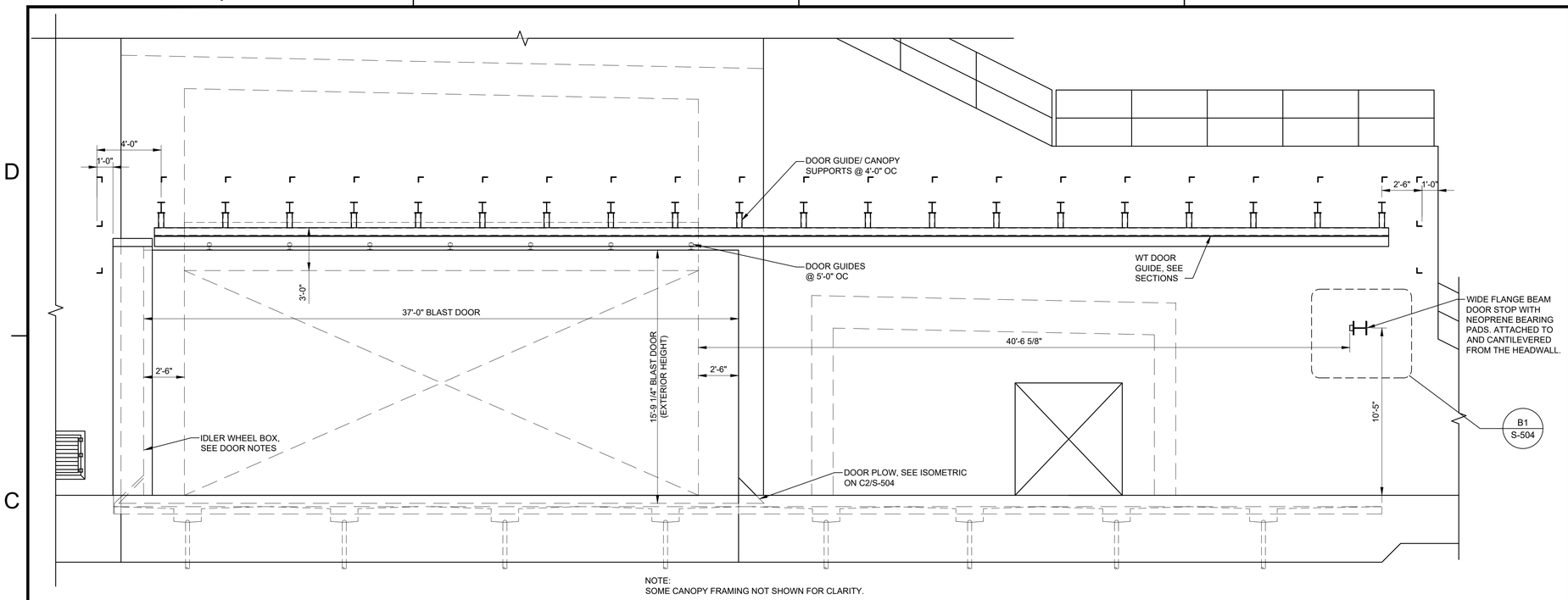

NOTE:
SOME CANOPY FRAMING NOT SHOWN FOR CLARITY.

C1 ELEVATION - DOOR IN CLOSED POSITION
SCALE: 1/4" = 1'-0"

0 2' 4' 8'

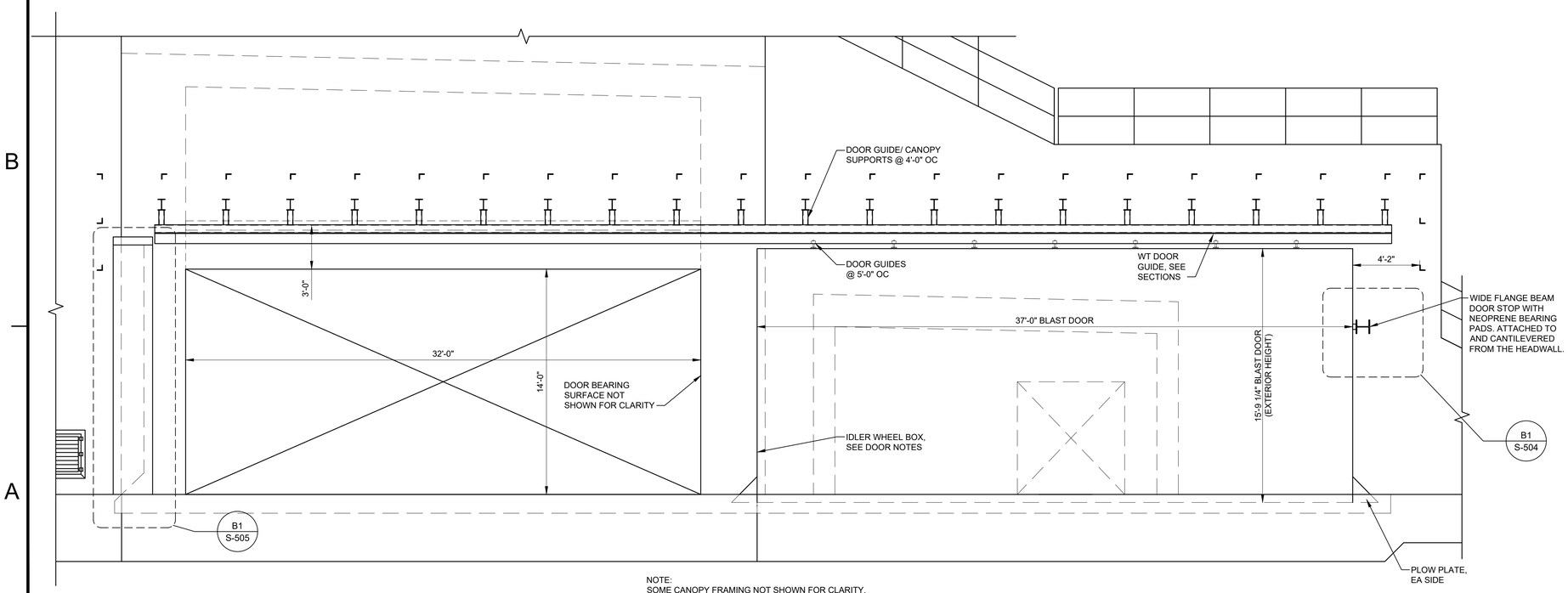

NOTE:
SOME CANOPY FRAMING NOT SHOWN FOR CLARITY.

A1 ELEVATION - DOOR IN OPEN POSITION
SCALE: 1/4" = 1'-0"

0 2' 4' 8'

SHEET NOTES

1. THE MAGAZINE BLAST DOOR MUST BE A SLIDING STEEL DOOR SUPPORTED FROM THE BOTTOM OF THE DOOR BY WHEELS LOCATED AT EACH END OF THE DOOR.
2. DOOR SYSTEM WILL BE TRACTION DRIVEN. THE LEADING EDGE (DOOR OPENING) WHEEL BOX CONTAINS BOTH A WHEEL AND A CHAIN DRIVEN POWER SYSTEM. THE TRAILING EDGE WHEEL BOX IS NOT POWERED AND ONLY CONTAINS AN IDLER WHEEL.
3. DOOR SYSTEM MUST INCLUDE A HAND-CRANKED MANUAL PULL SYSTEM OVERRIDE INCLUDING CHAIN DISENGAGEMENT THAT IS CAPABLE OF BOTH OPENING AND CLOSING THE DOOR SYSTEM.
4. DOOR MFR MUST SUBMIT A COMPLETE OPERATIONS & MAINTENANCE MANUAL TO THE CONTRACTING OFFICER FOR APPROVAL AND MUST ALSO SUBMIT A FINAL APPROVED OPERATIONS & MAINTENANCE MANUAL FOR RECORD.

THESE DRAWINGS ARE AN EXACT REPLICA OF THE STANDARD MAGAZINE TYPE "CLWS" PROVIDED BY NAVFAC. THE DESIGN WILL BE SITE ADAPTED AND MODIFIED TO MEET THE SPECIFIC GEOTECHNICAL AND LOADING CONDITIONS SPECIFIC TO NAVAL SUBMARINE BASE NEW LONDON, GROTON, CONNECTICUT.

ORIGINAL STANDARD DRAWING IS NAVFAC DRAWING NUMBER 12877621 SHT 12 OF 51

SYM	DESCRIPTION	DATE	APPR

NAVFAC

SEAL

Jacobs
1100 NORTH GLEBE ROAD
SUITE 500
ARLINGTON, VIRGINIA 22201
571.218.1000
FAX: 571.218.1600

A/E INFO

APPROVED
FOR COMMANDER NAVFAC 8/14/2025

ACTIVITY
APPROVED BY LCDR ELIZABETH OLOKODE NAVFAC NLON FEAD DIRECTOR NEW LONDON, GROTON, CT
SATISFACTORY TO DATE 05/27/2025

DES	JAF	DRW	SFF	CHK	TPH
PM/DM	SMS/CWJ				
BRANCH MANAGER	NEK				
CHIEF ENG/ARCH	JWJ				
FIRE PROTECTION	HPN				

DEPARTMENT OF THE NAVY
NAVAL FACILITIES ENGINEERING SYSTEMS COMMAND
MID-ATLANTIC
NAVAL FACILITIES ENGINEERING SYSTEMS COMMAND - MID-ATLANTIC
NAVAL STATION - NORFOLK, VA
NAVAL SUBMARINE BASE NEW LONDON
GROTON, CONNECTICUT
P-1102 WEAPONS MAGAZINE & ORDNANCE OPERATIONS FACILITY
CLWS MAGAZINE
FRONT WALL PARTIAL ELEVATIONS

SCALE: NONE
EPROJECT NO.: 1667770
CONSTR. CONTR. NO.
NAVFAC DRAWING NO. 12894261
SHEET 18 OF 77
S-204

FILE NAME: C:\pw_workdir\dms003\jb2mhill_09050107\d1495963\S-204.dwg LAYOUT NAME: S-204 PLOTTED: Friday, June 13, 2025 - 9:15am USER: 09050107

THESE DRAWINGS ARE AN EXACT REPLICA OF THE STANDARD MAGAZINE TYPE "CLWS" PROVIDED BY NAVFAC. THE DESIGN WILL BE SITE ADAPTED AND MODIFIED TO MEET THE SPECIFIC GEOTECHNICAL AND LOADING CONDITIONS SPECIFIC TO NAVAL SUBMARINE BASE NEW LONDON, GROTON, CONNECTICUT.

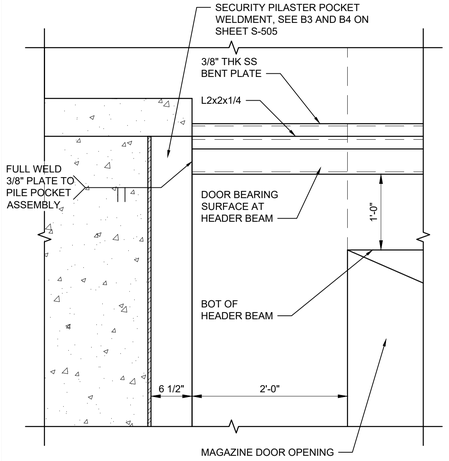

C1 DETAIL
SCALE: 1" = 1'-0"

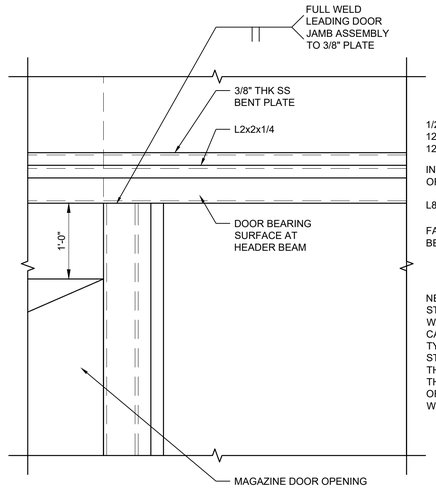

C2 DETAIL
SCALE: 1" = 1'-0"

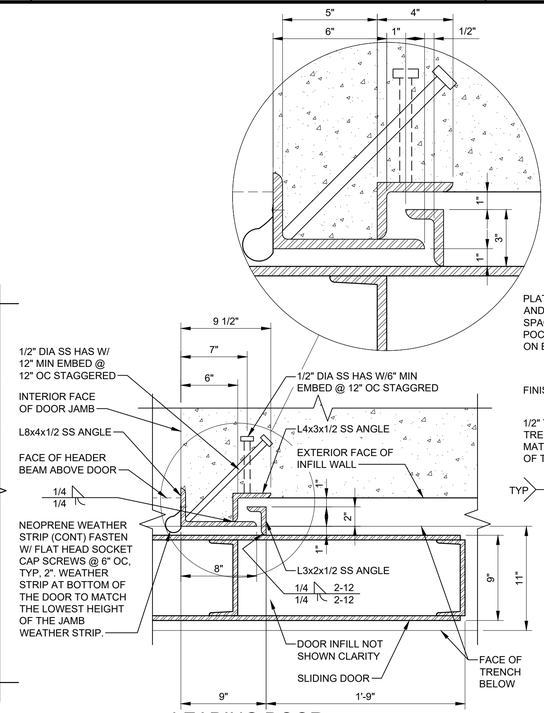

C3 LEADING DOOR EDGE JAMB DETAIL
SCALE: 1 1/2" = 1'-0"

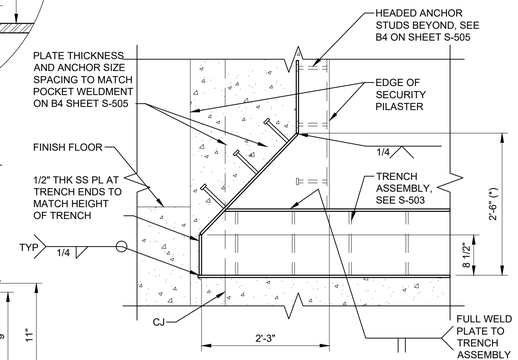

1. DIMENSIONS NOTED WITH AN (*) MUST BE COORDINATED BY THE DOOR MANUFACTURER ENSURING THE DOOR SYSTEM PERFORMS AS INTENDED.
2. SEE SHEETS S-503 AND S-505 FOR INFORMATION NOT SHOWN.

C4 SECURITY PILASTER POCKET AT DOOR PLOW
SCALE: 3/4" = 1'-0"

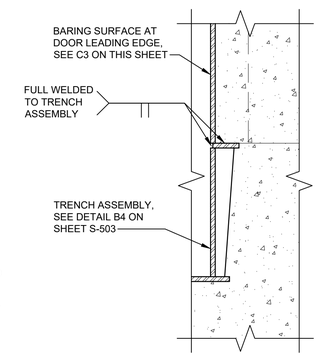

C5 LEADING DOOR JAMB AT TRENCH
SCALE: 1 1/2" = 1'-0"

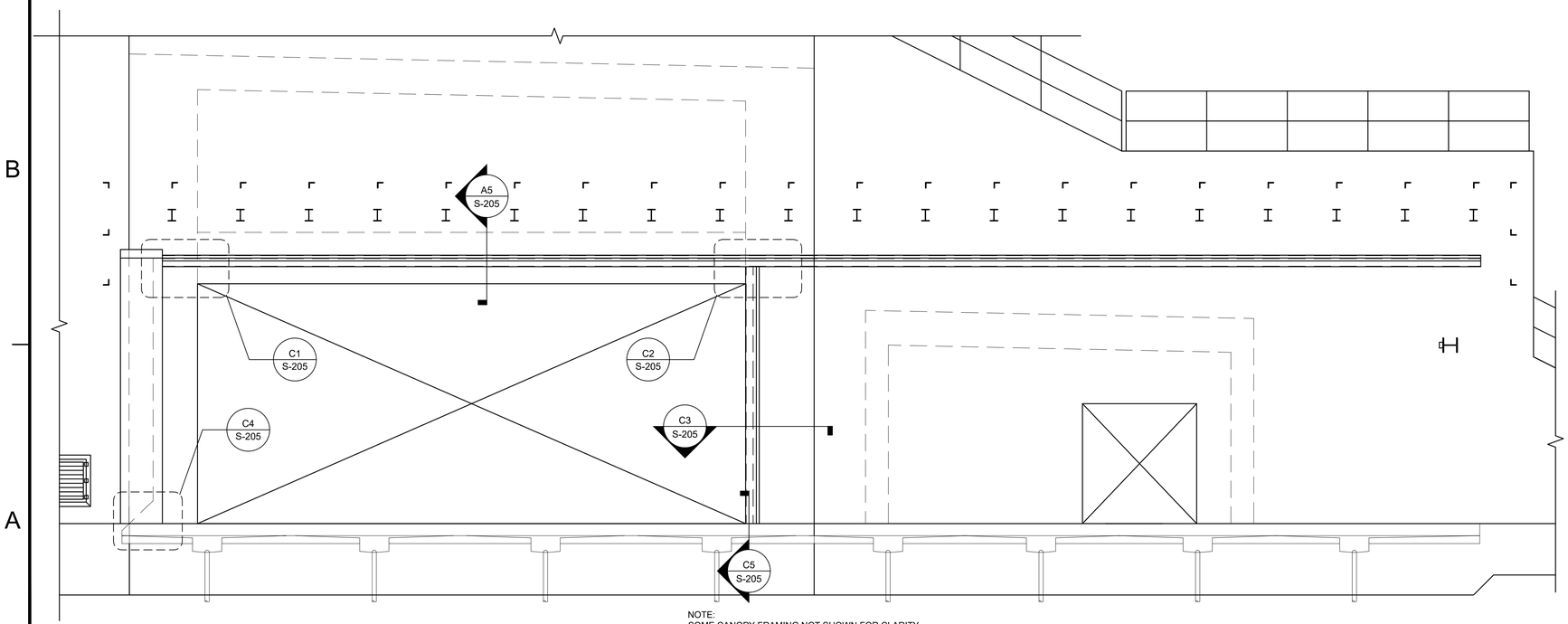

NOTE:
SOME CANOPY FRAMING NOT SHOWN FOR CLARITY.

A1 ELEVATION - DOOR BEARING SURFACES
SCALE: 1/4" = 1'-0"

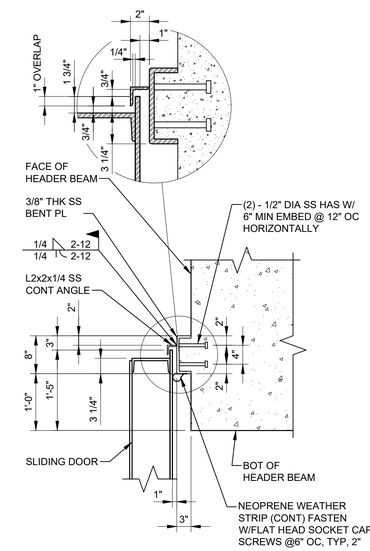

A5 DETAIL
SCALE: 3/4" = 1'-0"

ORIGINAL STANDARD DRAWING IS NAVFAC DRAWING NUMBER 12877622 SHT 13 OF 51

SYM	DESCRIPTION	DATE	APPR

NAVFAC

SEAL

Jacobs
1100 NORTH GLEBE ROAD
SUITE 500
ARLINGTON, VIRGINIA 22201
571.218.1000
FAX: 571.218.1600

A/E INFO

APPROVED
FOR COMMANDER NAVFAC
ACTIVITY
APPROVED BY LCDR ELIZABETH OLOKODE NAVFAC NLON FEAD DIRECTOR NEW LONDON, GROTON, CT
SATISFACTORY TO DATE 05/27/2025

DES JAF	DRW SFF	CHK TPH	
PM/DM			SMS/CWJ
BRANCH MANAGER			NEK
CHIEF ENG/ARCH			JWJ
FIRE PROTECTION			HPN

DEPARTMENT OF THE NAVY
NAVAL FACILITIES ENGINEERING SYSTEMS COMMAND
MID-ATLANTIC
NAVAL FACILITIES ENGINEERING SYSTEMS COMMAND - MID-ATLANTIC
NAVAL STATION - NORFOLK, VA
NAVAL SUBMARINE BASE NEW LONDON
GROTON, CONNECTICUT
P-1102 WEAPONS MAGAZINE & ORDNANCE OPERATIONS FACILITY
CLWS MAGAZINE
FRONT WALL PARTIAL ELEVATION AND DETAILS

SCALE: NONE
EPROJECT NO.: 1667770
CONSTR. CONTR. NO.
NAVFAC DRAWING NO. 12894262
SHEET 19 OF 77
S-205

FILE NAME: C:\pw_workdir\dem003\ch2mhill_09050107\d1495963\S-205.dwg LAYOUT NAME: S-205 PLOTTED: Friday, June 13, 2025 - 9:15am USER: 09050107

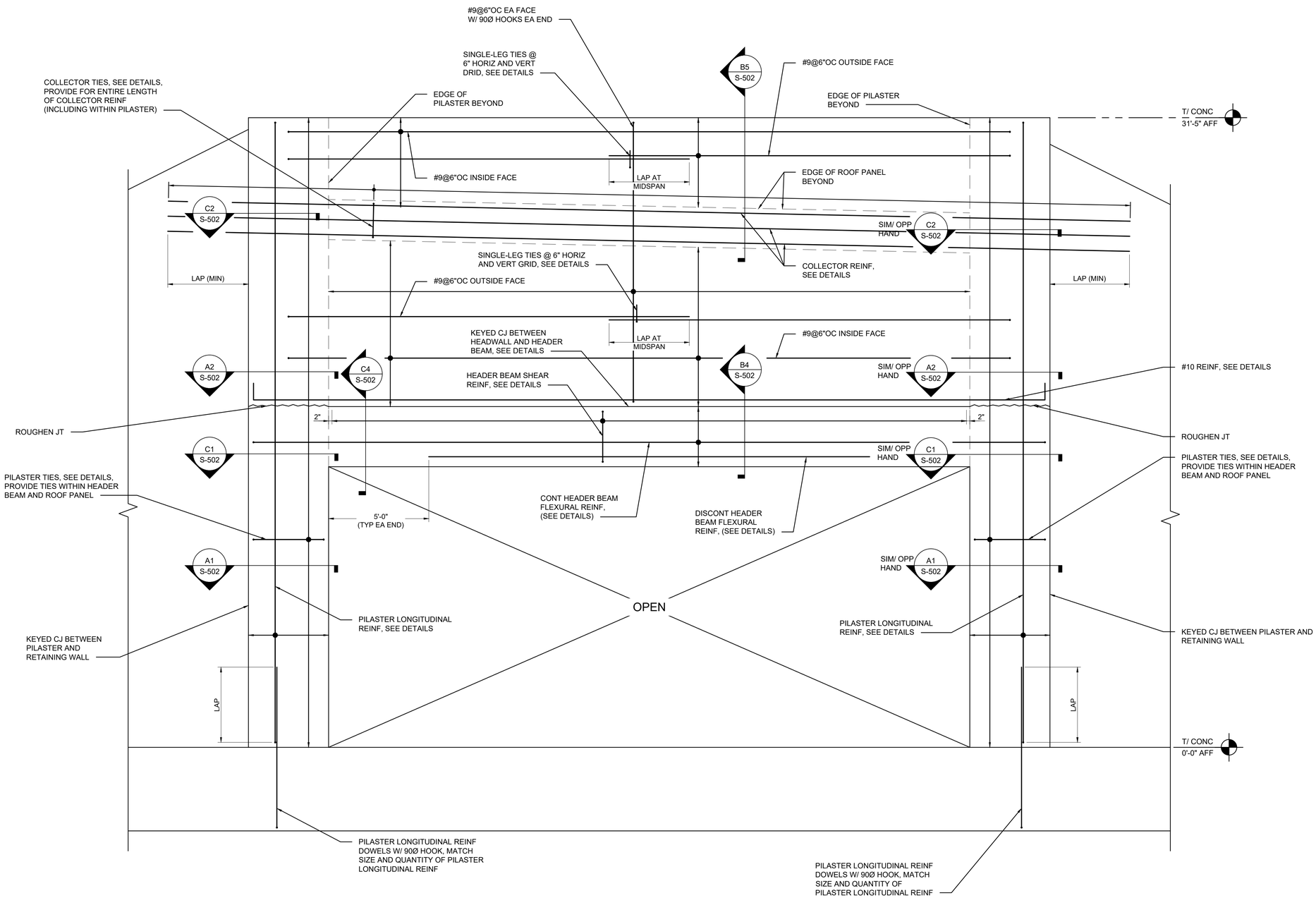

A1 HEADWALL REINF ELEVATION
SCALE: 3/8" = 1'-0"

0 2' 4' 8'

THESE DRAWINGS ARE AN EXACT REPLICA OF THE STANDARD MAGAZINE TYPE "CLWS" PROVIDED BY NAVFAC. THE DESIGN WILL BE SITE ADAPTED AND MODIFIED TO MEET THE SPECIFIC GEOTECHNICAL AND LOADING CONDITIONS SPECIFIC TO NAVAL SUBMARINE BASE NEW LONDON, GROTON, CONNECTICUT.

ORIGINAL STANDARD DRAWING IS NAVFAC DRAWING NUMBER 12877623 SHT 14 OF 51

SYM	DESCRIPTION	DATE	APPR

NAVFAC

Jacobs
1100 NORTH GLEBE ROAD
SUITE 500
ARLINGTON, VIRGINIA 22201
571.218.1000
FAX: 571.218.1600

A/E INFO

APPROVED
FOR COMMANDER NAVFAC 8/14/2025

ACTIVITY
APPROVED BY LCDR ELIZABETH OLOKODE NAVFAC NLON FEAD DIRECTOR NEW LONDON, GROTON, CT

SATISFACTORY TO DATE 05/27/2025

DES JAF	DRW SFF	CHK TPH	
PM/DM	SMS/CWJ		
BRANCH MANAGER	NEK		
CHIEF ENG/ARCH	JWJ		
FIRE PROTECTION	HPN		

DEPARTMENT OF THE NAVY
NAVAL FACILITIES ENGINEERING SYSTEMS COMMAND
NAVAL FACILITIES ENGINEERING SYSTEMS COMMAND - MID-ATLANTIC
NAVAL STATION - NORFOLK VA
MID-ATLANTIC
NAVAL SUBMARINE BASE NEW LONDON
GROTON, CONNECTICUT
P-1102 WEAPONS MAGAZINE & ORDNANCE OPERATIONS FACILITY
CLWS MAGAZINE
BUILDING ELEVATIONS – 3

SCALE: NONE
EPROJECT NO.: 1667770
CONSTR. CONTR. NO.
NAVFAC DRAWING NO.
12894263
SHEET 20 OF 77
S-206

FILE NAME: C:\pw_workdir\dms033\ch2mhill_00050107\d1495963\S-206.dwg LAYOUT NAME: S-206 PLOTTED: Friday, June 13, 2025 - 9:16am USER: 00050107

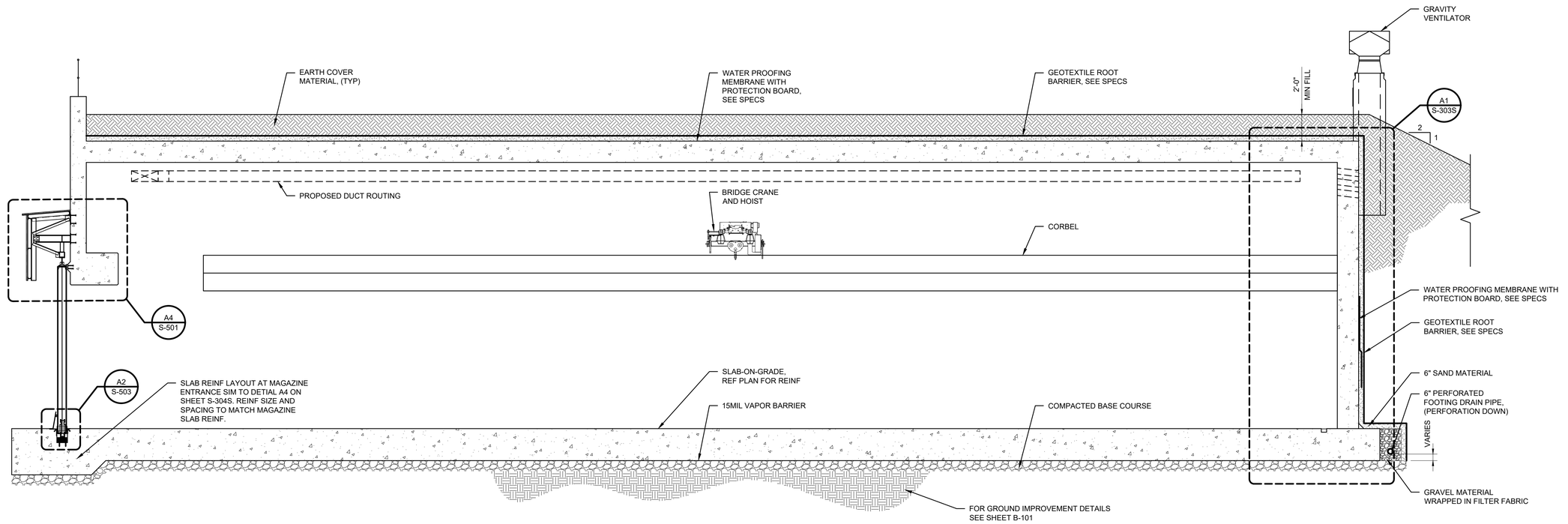

C1 SECTION
SCALE: 3/16" = 1'-0"

0 4' 8' 16'

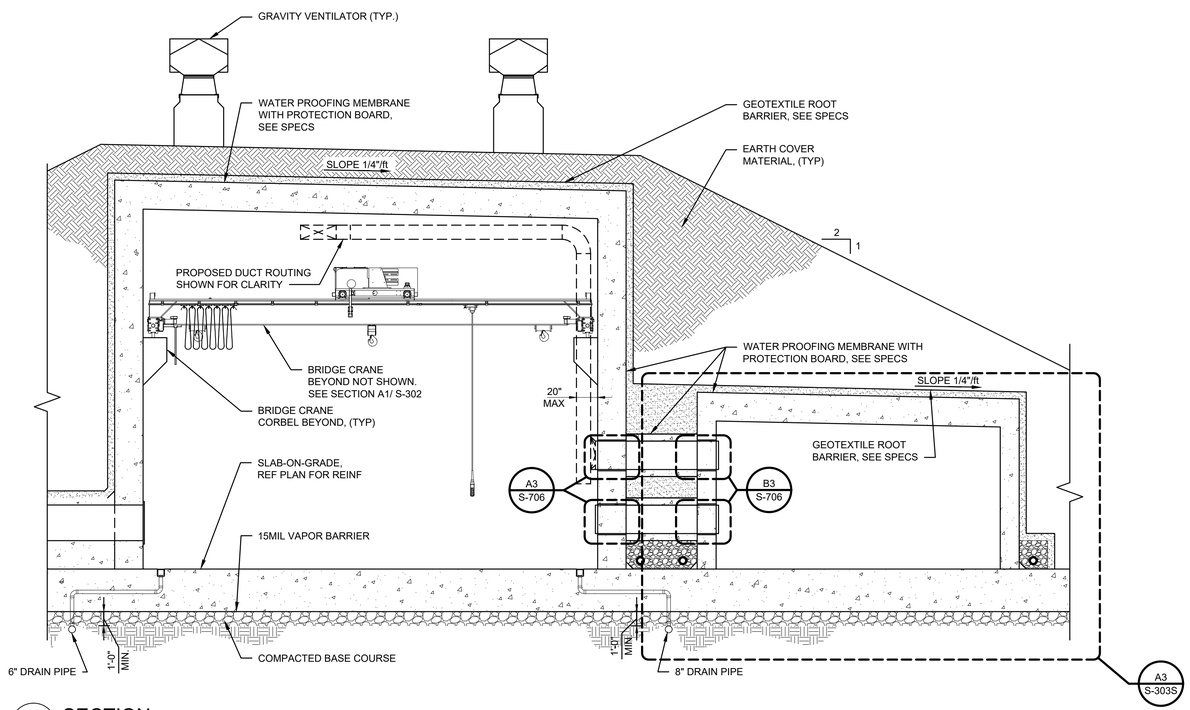

A1 SECTION
SCALE: 3/16" = 1'-0"

0 4' 8' 16'

THESE DRAWINGS HAVE BEEN ADAPTED FROM APPROVED NAVFAC MUNITIONS STORAGE CONSTRUCTION DOCUMENTS, NAVFAC DRAWING NUMBERS 12877610 TO 12877660, APPROVED BY DDESB ON 20 MARCH 2023. JACOBS DOR RESPONSIBILITY AND SEAL APPLICABILITY IS LIMITED TO THE SITE ADAPTATIONS AND MODIFICATIONS MADE TO THIS DRAWING.

ORIGINAL STANDARD DRAWING IS NAVFAC DRAWING NUMBER 12877624 SHT 15 OF 51

SYM	DESCRIPTION	DATE	APPR

NAVFAC

LAURA ARICO PRESLEY
REGISTERED ENGINEER
AGRICULTURE
COMMERCE
No. 105382
STATE OF TENNESSEE
06/27/2025
SEAL

Jacobs
1100 NORTH GLEBE ROAD
SUITE 500
ARLINGTON, VIRGINIA 22201
571.218.1000
FAX: 571.218.1600

A/E INFO

APPROVED
FOR COMMANDER NAVFAC 6/4/2025

ACTIVITY
APPROVED BY LCDR ELIZABETH OLOKODE NAVFAC NLON FEAD DIRECTOR NEW LONDON, GROTON, CT
SATISFACTORY TO DATE 05/27/2025

DES	JAF	DRW	SFF	CHK	TPH

PM/DM	SMS/CWJ
BRANCH MANAGER	NEK
CHIEF ENG/ARCH	JWJ
FIRE PROTECTION	HPN

DEPARTMENT OF THE NAVY
NAVAL FACILITIES ENGINEERING SYSTEMS COMMAND
MID-ATLANTIC
NAVAL FACILITIES ENGINEERING SYSTEMS COMMAND - MID-ATLANTIC
NAVAL STATION - NORFOLK, VA
NAVAL SUBMARINE BASE NEW LONDON
GROTON, CONNECTICUT
P-1102 WEAPONS MAGAZINE & ORDNANCE OPERATIONS FACILITY
CLWS MAGAZINE
BUILDING SECTIONS

SCALE: NONE
EPROJECT NO.: 1667770
CONSTR. CONTR. NO.
NAVFAC DRAWING NO. 12894264
SHEET 21 OF 77

S-301S

FILE NAME: C:\pw_workdir\dms0031\ch2mhill_09050107\d1495963\S-301S.dwg LAYOUT NAME: S-301S PLOTTED: Friday, June 13, 2025 - 9:16am USER: 09050107

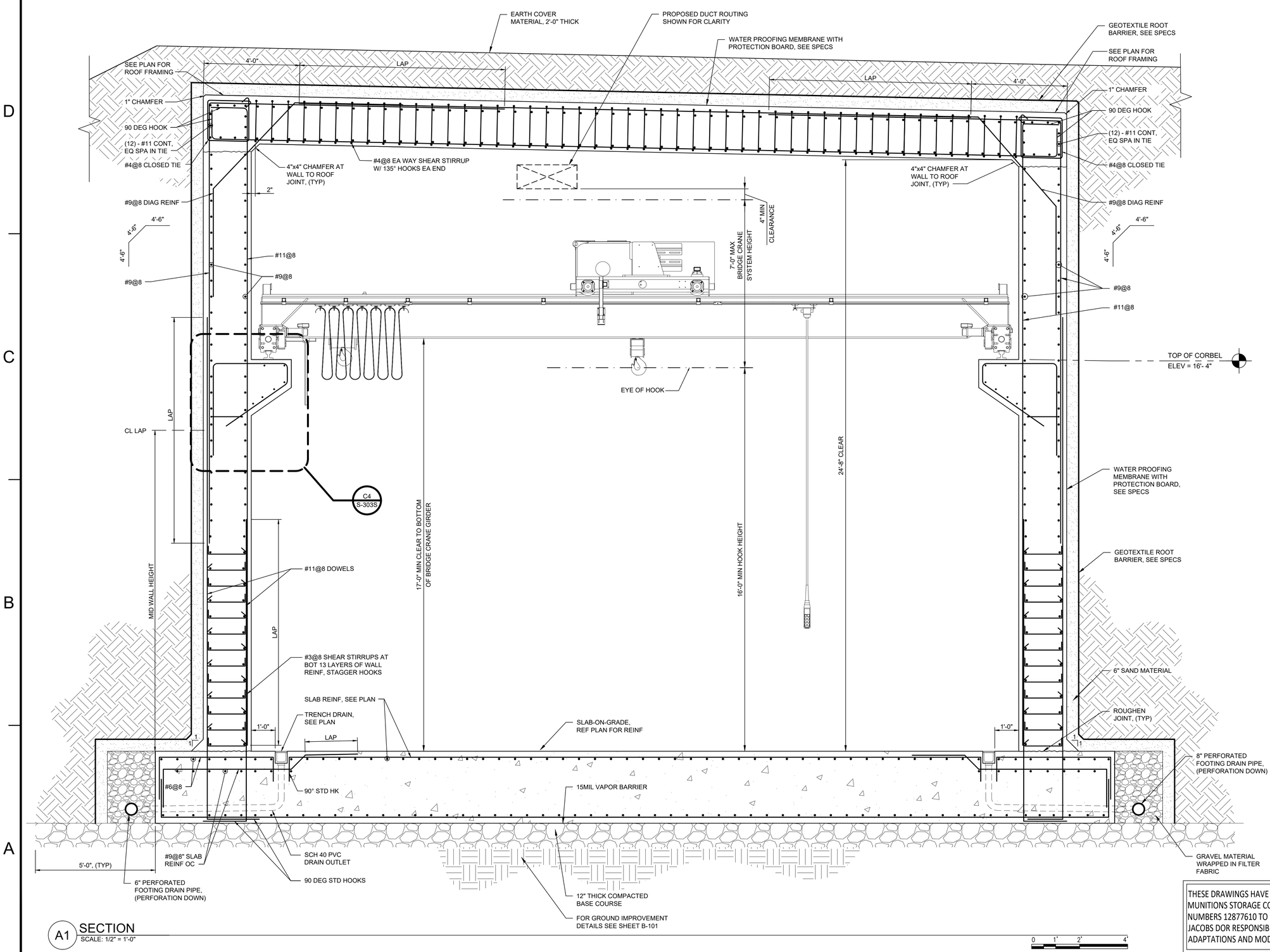

A1 SECTION
SCALE: 1/2" = 1'-0"

THESE DRAWINGS HAVE BEEN ADAPTED FROM APPROVED NAVFAC MUNITIONS STORAGE CONSTRUCTION DOCUMENTS, NAVFAC DRAWING NUMBERS 12877610 TO 12877660, APPROVED BY DDESB ON 20 MARCH 2023. JACOBS DOR RESPONSIBILITY AND SEAL APPLICABILITY IS LIMITED TO THE SITE ADAPTATIONS AND MODIFICATIONS MADE TO THIS DRAWING.

ORIGINAL STANDARD DRAWING IS NAVFAC DRAWING NUMBER 12877625 SHT 16 OF 51

SYM	DESCRIPTION	DATE	APPR

NAVFAC

LAURA ARICO PRESLEY
REGISTERED ENGINEER
AGRICULTURE
COMMERCE
No. 10658
STATE OF TENNESSEE
06/27/2025
SEAL

Jacobs
1100 NORTH GLEBE ROAD
SUITE 500
ARLINGTON, VIRGINIA 22201
571.218.1000
FAX: 571.218.1600

A/E INFO

APPROVED
FOR COMMANDER NAVFAC
ACTIVITY
APPROVED BY LCDR ELIZABETH OLOKODE NAVFAC NLON FEAD DIRECTOR NEW LONDON, GROTON, CT
SATISFACTORY TO DATE: 05/27/2025

DES	JAF	DRW SFF	CHK TPH
PM/DM	SMS/CWJ		
BRANCH MANAGER	NEK		
CHIEF ENG/ARCH	JWJ		
FIRE PROTECTION	HPN		

DEPARTMENT OF THE NAVY
NAVAL FACILITIES ENGINEERING SYSTEMS COMMAND - MID-ATLANTIC
MID-ATLANTIC
NAVAL FACILITIES ENGINEERING SYSTEMS COMMAND
NAVAL STATION - NORFOLK, VA
NAVAL SUBMARINE BASE NEW LONDON
GROTON, CONNECTICUT
P-1102 WEAPONS MAGAZINE & ORDNANCE OPERATIONS FACILITY
CLWS MAGAZINE
WALL SECTIONS – 1

SCALE: NONE
EPROJECT NO.: 1667770
CONSTR. CONTR. NO.
NAVFAC DRAWING NO. 12894265
SHEET 22 OF 77

S-302S

FILE NAME: C:\pw_workdir\dem0033\ch2mhill_09050107\d1495963\S-302S.dwg LAYOUT NAME: S-302 PLOTTED: Friday, June 13, 2025 - 9:16am USER: 09050107

SHEET NOTE:

1. ALL REINFORCING STEEL MUST BE CONTINUOUSLY BONDED AND GROUNDED PER S-002 AND A1/ E-504.

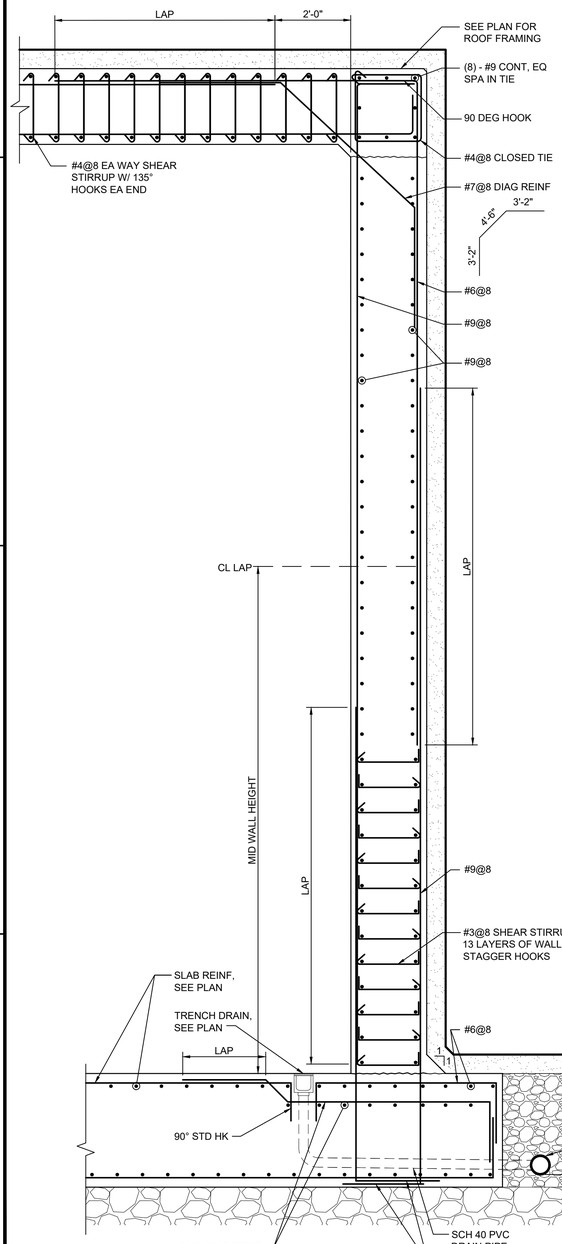

A2 SECTION
A1

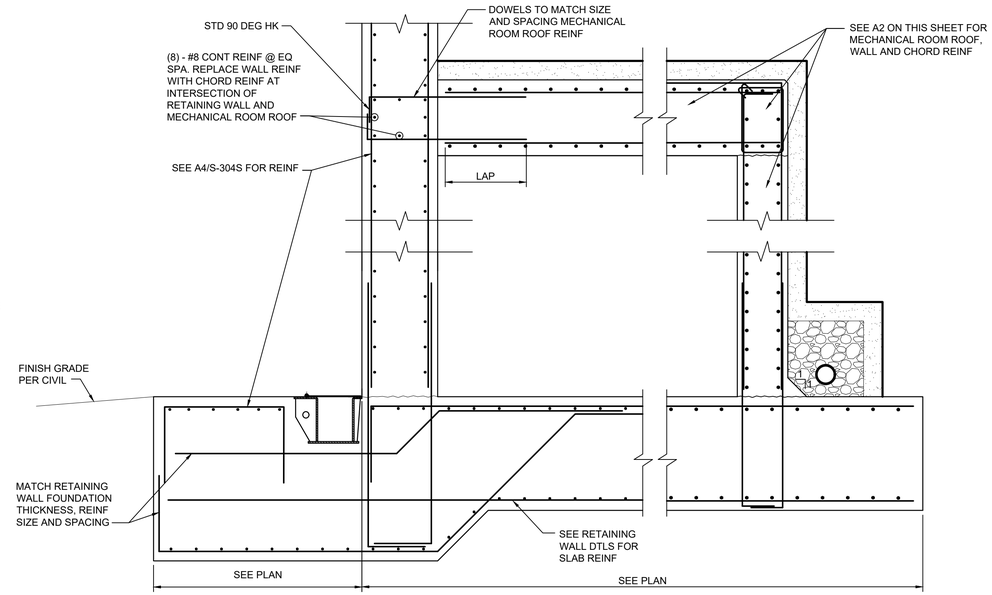

C2 SECTION
SCALE: 1/2" = 1'-0'

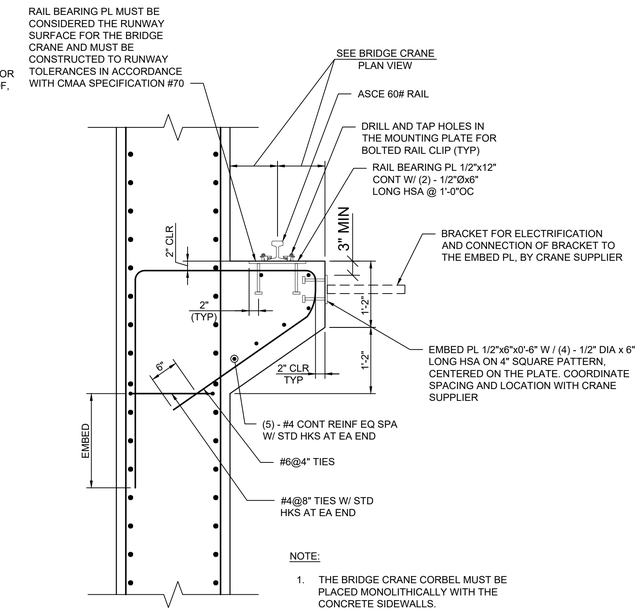

NOTE:

1. THE BRIDGE CRANE CORBEL MUST BE PLACED MONOLITHICALLY WITH THE CONCRETE SIDEWALLS.
2. EMBED PLATES FOR ELECTRIFICATION ARE DESIGNED TO SUPPORT 200 POUNDS AT A MAXIMUM DISTANCE OF 1'-6" FROM THE FACE OF THE CORBEL.

C4 BRIDGE CRANE CONTINUOUS CORBEL DETAIL
SCALE: 3/4" = 1'-0"

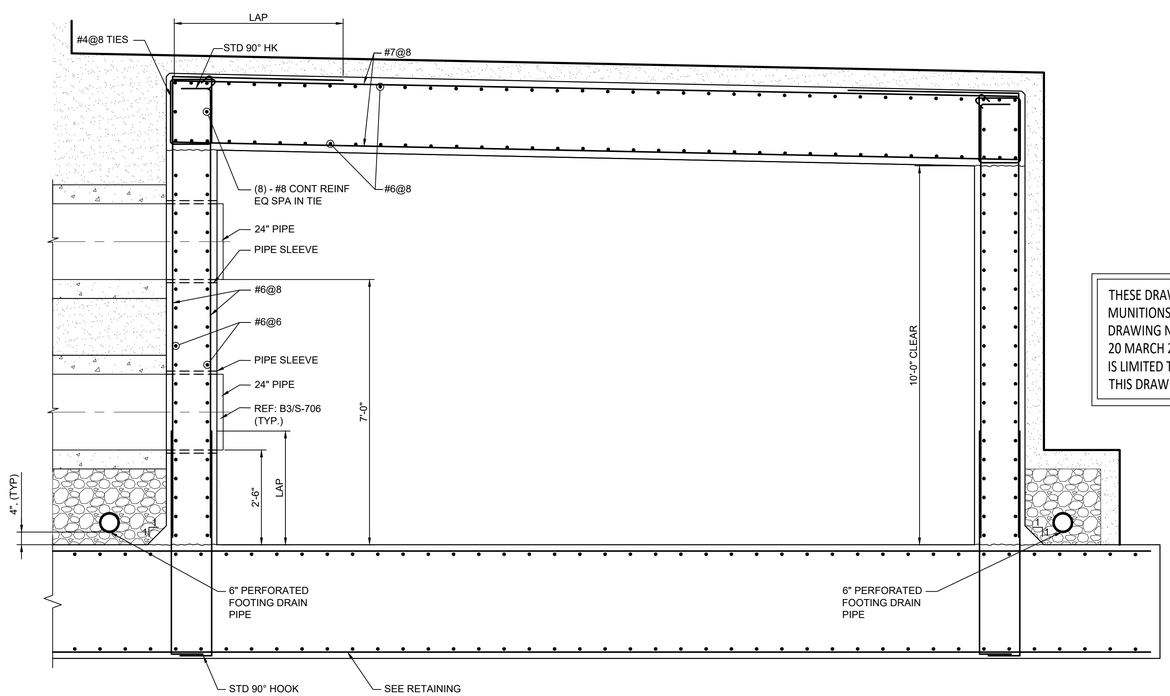

A2 SECTION
SCAL1/2" = 1'-0'

THESE DRAWINGS HAVE BEEN ADAPTED FROM APPROVED NAVFAC MUNITIONS STORAGE CONSTRUCTION DOCUMENTS, NAVFAC DRAWING NUMBERS 12877610 TO 12877660, APPROVED BY DDESB ON 20 MARCH 2023. JACOBS DOR RESPONSIBILITY AND SEAL APPLICABILITY IS LIMITED TO THE SITE ADAPTATIONS AND MODIFICATIONS MADE TO THIS DRAWING.

ORIGINAL STANDARD DRAWING IS NAVFAC DRAWING NUMBER 12877626 SHT 17 OF 51

SYM	DESCRIPTION	DATE	APPR

NAVFAC

LAURA ARICO PRESLEY REGISTERED ENGINEER AGRICULTURE COMMERCE No. 106382 STATE OF TENNESSEE 08/21/2025

SEAL

Jacobs
1100 NORTH GLEBE ROAD
SUITE 500
ARLINGTON, VIRGINIA 22201
571.218.1000
FAX: 571.218.1600

A/E INFO

APPROVED
FOR COMMANDER NAVFAC 8/14/2025

ACTIVITY
APPROVED BY LCDR ELIZABETH OLOKODE NAVFAC NLON FEAD DIRECTOR NEW LONDON, GROTON, CT

SATISFACTORY TO DATE 05/27/2025

DES	JAF	DRW	SFF	CHK	TPH

PM/DM	SMS/CWJ
BRANCH MANAGER	NEK
CHIEF ENG/ARCH	JWJ
FIRE PROTECTION	HPN

DEPARTMENT OF THE NAVY
NAVAL FACILITIES ENGINEERING SYSTEMS COMMAND
MID-ATLANTIC

NAVAL FACILITIES ENGINEERING SYSTEMS COMMAND - MID-ATLANTIC
NAVAL STATION - NORFOLK, VA

NAVAL SUBMARINE BASE NEW LONDON
GROTON, CONNECTICUT

P-1102 WEAPONS MAGAZINE & ORDNANCE OPERATIONS FACILITY
CLWS MAGAZINE

WALL SECTIONS – 2

SCALE: NONE
EPROJECT NO.: 1667770
CONSTR. CONTR. NO.
NAVFAC DRAWING NO. 12894266
SHEET 23 OF 77

S-303S

FILE NAME: C:\pw_workdir\dms003\pb2mhill_09050107\d1495963\S-303S.dwg LAYOUT NAME: S-303S PLOTTED: Friday, June 13, 2025 – 9:17am USER: 09050107

THESE DRAWINGS HAVE BEEN ADAPTED FROM APPROVED NAVFAC MUNITIONS STORAGE CONSTRUCTION DOCUMENTS, NAVFAC DRAWING NUMBERS 12877610 TO 12877660, APPROVED BY DDESB ON 20 MARCH 2023. JACOBS DOR RESPONSIBILITY AND SEAL APPLICABILITY IS LIMITED TO THE SITE ADAPTATIONS AND MODIFICATIONS MADE TO THIS DRAWING.

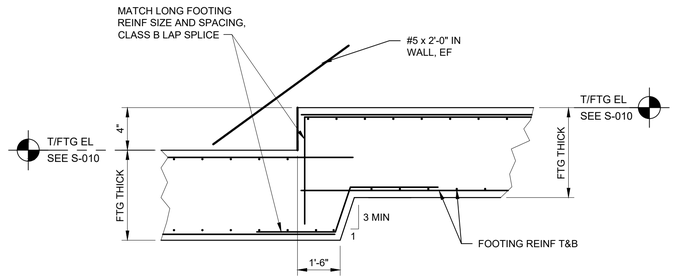

C2 TYPICAL FOOTING STEP DETAIL
SCALE: 3/8" = 1'-0'

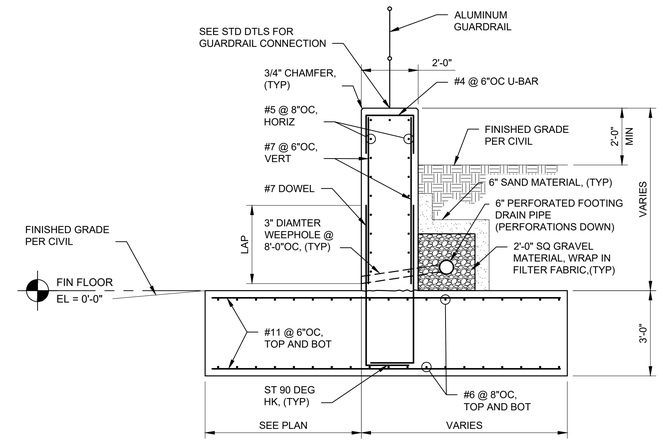

C4 RETAINING WALL SECTION
SCALE: 3/8" = 1'-0'

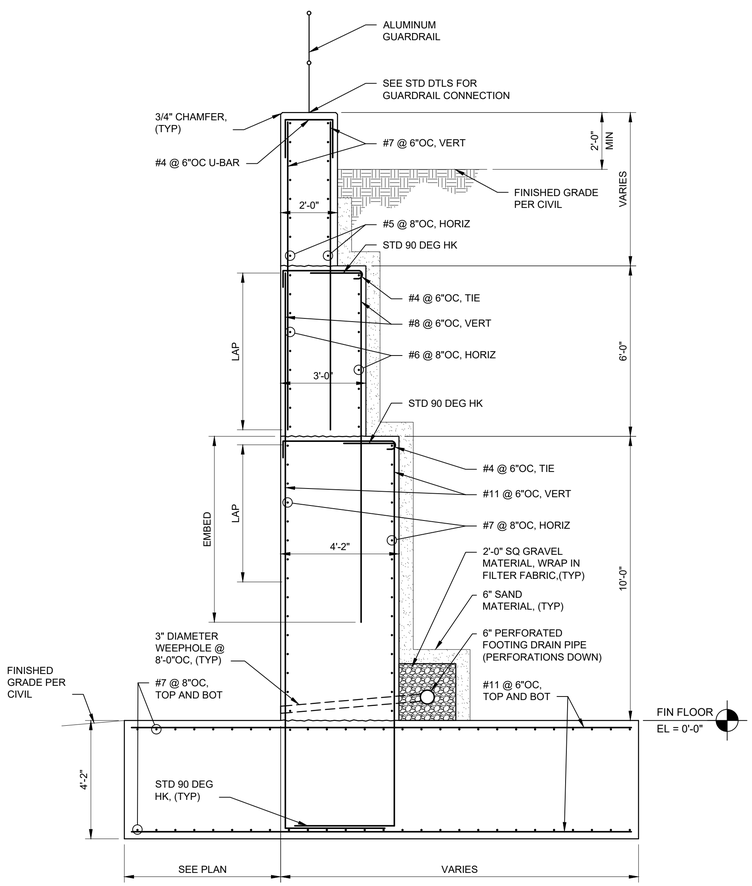

A1 RETAINING WALL SECTION
SCALE: 3/8" = 1'-0'

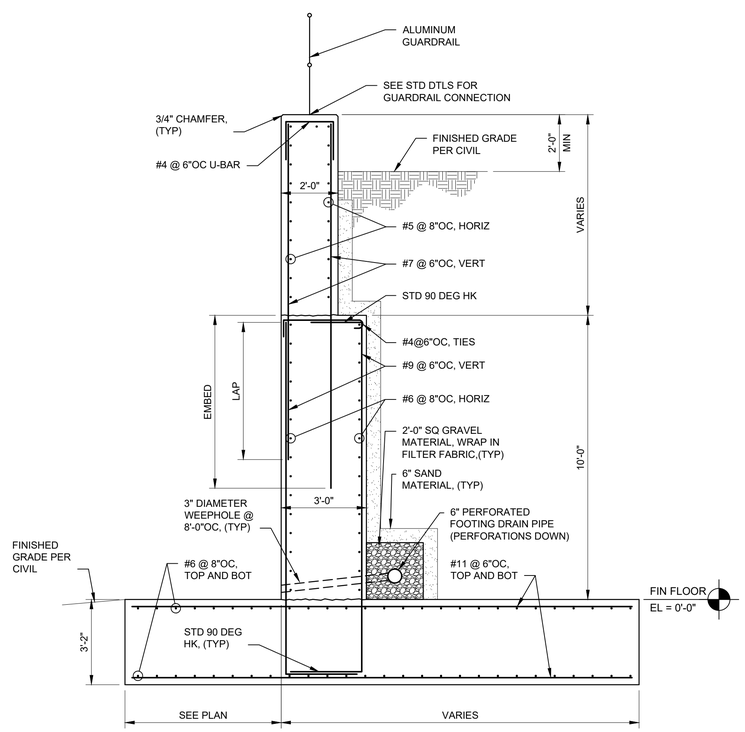

A2 RETAINING WALL SECTION
SCALE: 3/8" = 1'-0'

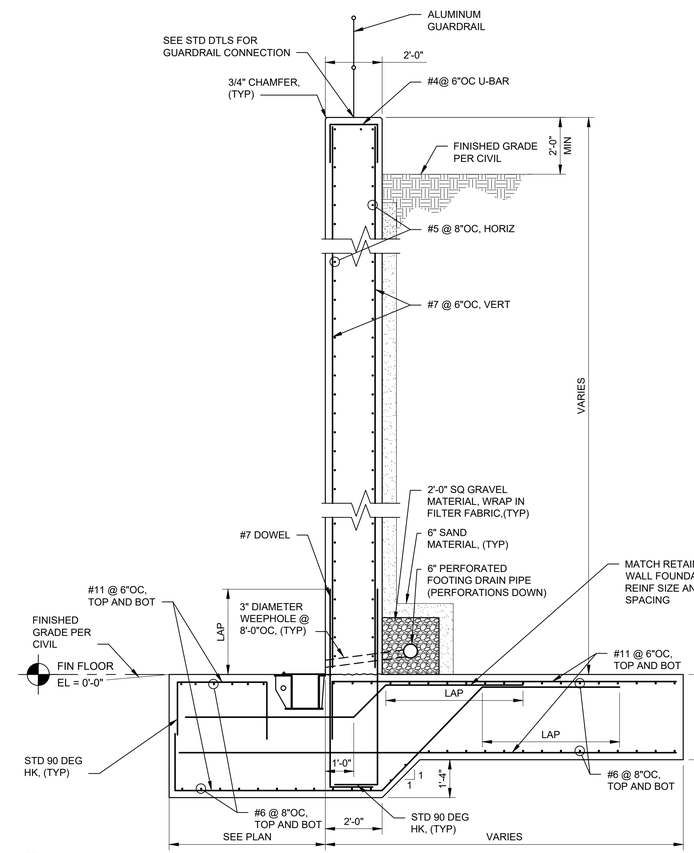

A4 RETAINING WALL SECTION
SCALE: 3/8" = 1'-0'

ORIGINAL STANDARD DRAWING IS NAVFAC DRAWING NUMBER 12877627 SHT 18 OF 51

SYM	DESCRIPTION	DATE	APPR

NAVFAC

LARA ARICO PRESLEY, REGISTERED ENGINEER, AGRICULTURE, COMMERCE, No. 106382, STATE OF TENNESSEE, 08/21/2025

SEAL

Jacobs
1100 NORTH GLEBE ROAD
SUITE 500
ARLINGTON, VIRGINIA 22201
571.218.1000
FAX: 571.218.1600

A/E INFO

APPROVED
FOR COMMANDER NAVFAC 8/14/2025

ACTIVITY
APPROVED BY LCDR ELIZABETH OLOKODE NAVFAC NLON FEAD DIRECTOR NEW LONDON, GROTON, CT

SATISFACTORY TO DATE 05/27/2025

DES JAF	DRW SFF	CHK TPH	
PM/DM	SMS/CWJ		
BRANCH MANAGER	NEK		
CHIEF ENG/ARCH	JWJ		
FIRE PROTECTION	HPN		

NAVAL FACILITIES ENGINEERING SYSTEMS COMMAND
NAVAL STATION - NORFOLK, VA
DEPARTMENT OF THE NAVY
NAVAL FACILITIES ENGINEERING SYSTEMS COMMAND - MID-ATLANTIC
MID-ATLANTIC
NAVAL SUBMARINE BASE NEW LONDON
GROTON, CONNECTICUT
P-1102 WEAPONS MAGAZINE & ORDNANCE OPERATIONS FACILITY
CLWS MAGAZINE
WALL SECTIONS – 3

SCALE: NONE
EPROJECT NO.: 1667770
CONSTR. CONTR. NO.
NAVFAC DRAWING NO.
12894267
SHEET 24 OF 77
S-304S

FILE NAME: C:\pw_workdir\dms0033\pb2mnjl_09050107\d1495963\S-304S.dwg LAYOUT NAME: S-304S PLOTTED: Friday, June 13, 2025 - 9:17am USER: 09050107

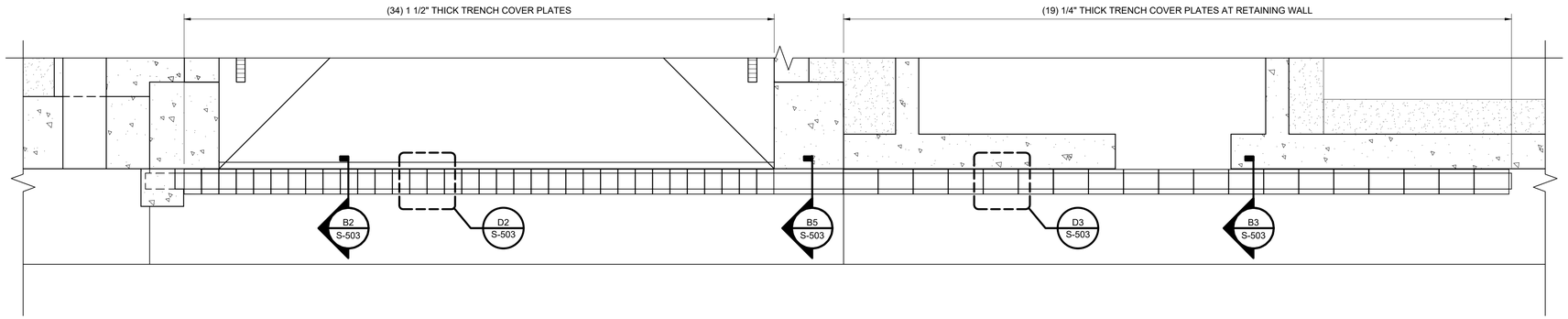

C1 TRENCH COVER LAYOUT PLAN

SCALE: 1/4" = 1'-0"

0 2' 4' 8'

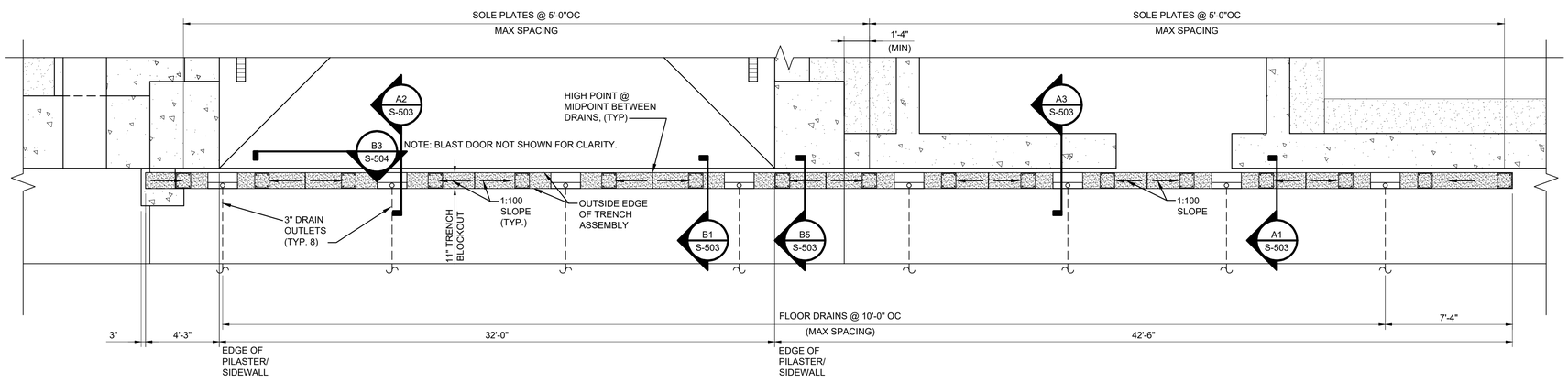

NOTE:

1. ASCE 60# RAIL MUST EXTEND THE ENTIRE LENGTH OF TRENCH WITH A 2" GAP AT THE ENDS. RAIL SPLICES AND SPLICE CONNECTIONS TO BE SELECTED BY RAIL MFR, AND TO BE LOCATED AT THE CENTER LINE BETWEEN TWO TRENCH BLOCKOUTS. SEE S -503 FOR MORE INFORMATION ABOUT LOCATION/ALIGNMENT OF RAIL.

A1 TRENCH LAYOUT PLAN

SCALE: 1/4" = 1'-0"

0 2' 4' 8'

SHEET NOTES

1. TRENCH COVER PLATES MUST BE FABRICATED TO BE ABLE TO BE LIFTED AUTOMATICALLY BY A DOOR PLOW LOCATED AT THE TRAILING AND LEADING EDGES OF THE SLIDING BLAST DOOR. TRENCH PLATE FABRICATOR MUST COORDINATE LOCATION AND ORIENTATION OF CAM GUIDES FOR THE TRENCH PLATES WITH THE BLAST DOOR FABRICATOR SUCH THAT THERE IS A SEAMLESS INTERFACE WITH THE DOOR PLOW SYSTEM AND THE TRENCH PLATES.
2. FINAL TERMINATION OF DOOR TRENCH DRAINS MUST BE AS DETERMINED BY THE SITE-ADAPT ENGINEER.

THESE DRAWINGS ARE AN EXACT REPLICA OF THE STANDARD MAGAZINE TYPE "CLWS" PROVIDED BY NAVFAC. THE DESIGN WILL BE SITE ADAPTED AND MODIFIED TO MEET THE SPECIFIC GEOTECHNICAL AND LOADING CONDITIONS SPECIFIC TO NAVAL SUBMARINE BASE NEW LONDON, GROTON, CONNECTICUT.

ORIGINAL STANDARD DRAWING IS NAVFAC DRAWING NUMBER 12877628 SHT 19 OF 51

SYM	DESCRIPTION	DATE	APPR.

NAVFAC

SEAL

Jacobs
1100 NORTH GLEBE ROAD
SUITE 500
ARLINGTON, VIRGINIA 22201
571.218.1000
FAX: 571.218.1600

A/E INFO

APPROVED

FOR COMMANDER NAVFAC 8/14/2025

ACTIVITY
APPROVED BY LCDR ELIZABETH OLOKODE NAVFAC NLON FEAD DIRECTOR NEW LONDON, GROTON, CT

SATISFACTORY TO DATE 05/27/2025

DES	JAF	DRW	SFF	CHK	TPH

PM/DM	SMS/CWJ
BRANCH MANAGER	NEK
CHIEF ENG/ARCH	JWJ
FIRE PROTECTION	HPN

DEPARTMENT OF THE NAVY
NAVAL FACILITIES ENGINEERING SYSTEMS COMMAND
MID-ATLANTIC

NAVAL FACILITIES ENGINEERING SYSTEMS COMMAND - MID-ATLANTIC
NAVAL STATION - NORFOLK, VA

NAVAL SUBMARINE BASE NEW LONDON

GROTON, CONNECTICUT

P-1102 WEAPONS MAGAZINE & ORDNANCE OPERATIONS FACILITY
CLWS MAGAZINE

ENLARGED TRENCH PLAN

SCALE: AS NOTED

EPROJECT NO.: 1667770

CONSTR. CONTR. NO.

NAVFAC DRAWING NO.
12894268

SHEET 25 OF 77

S-401

FILE NAME: C:\pw_workdir\dms003\jb2mhill_09050107\d1495963\S-401.dwg LAYOUT NAME: S-401 PLOTTED: Friday, June 13, 2025 – 9:17am USER: 09050107

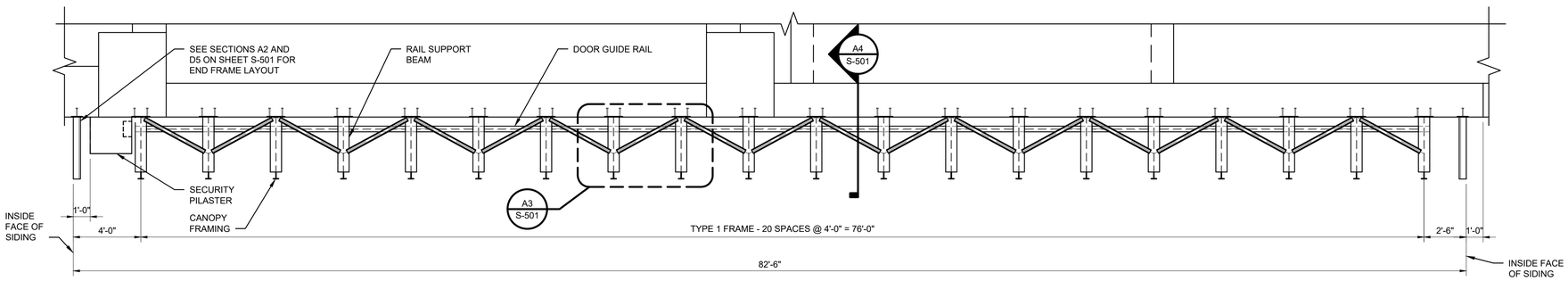

C1 ENLARGED DOOR RAIL SUPPORT FRAMING PLAN
SCALE: 1/4" = 1'-0"

0 2' 4' 8'

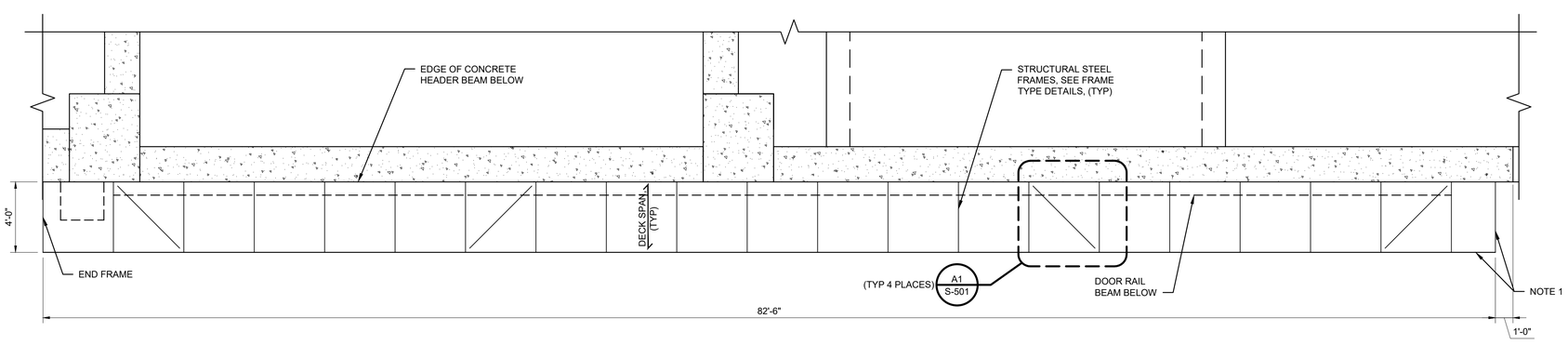

A1 ENLARGED CANOPY FRAMING PLAN
SCALE: 1/4" = 1'-0"

0 2' 4' 8'

SHEET NOTES

1. STEEL DECK TO BE USED FOR ROOF AND SIDING OF CANOPY STRUCTURE. REFERENCE S-002 FOR STEEL DECK REQUIREMENTS.

THESE DRAWINGS ARE AN EXACT REPLICA OF THE STANDARD MAGAZINE TYPE "CLWS" PROVIDED BY NAVFAC. THE DESIGN WILL BE SITE ADAPTED AND MODIFIED TO MEET THE SPECIFIC GEOTECHNICAL AND LOADING CONDITIONS SPECIFIC TO NAVAL SUBMARINE BASE NEW LONDON, GROTON, CONNECTICUT.

ORIGINAL STANDARD DRAWING IS NAVFAC DRAWING NUMBER 12877629 SHT 20 OF 51

SYM	DESCRIPTION	DATE	APPR

NAVFAC

SEAL

Jacobs
1100 NORTH GLEBE ROAD
SUITE 500
ARLINGTON, VIRGINIA 22201
571.218.1000
FAX: 571.218.1600

A/E INFO

APPROVED
FOR COMMANDER NAVFAC 8/14/2025

ACTIVITY
APPROVED BY LCDR ELIZABETH OLOKODE NAVFAC NLON FEAD DIRECTOR NEW LONDON, GROTON, CT
SATISFACTORY TO DATE 05/27/2025

DES	JAF	DRW	SFF	CHK	TPH
PM/DM	SMS/CWJ				
BRANCH MANAGER	NEK				
CHIEF ENG/ARCH	JWJ				
FIRE PROTECTION	HPN				

DEPARTMENT OF THE NAVY
NAVAL FACILITIES ENGINEERING SYSTEMS COMMAND
MID-ATLANTIC
NAVAL FACILITIES ENGINEERING SYSTEMS COMMAND - MID-ATLANTIC
NAVAL STATION - NORFOLK, VA
NAVAL SUBMARINE BASE NEW LONDON
GROTON, CONNECTICUT
P-1102 WEAPONS MAGAZINE & ORDNANCE OPERATIONS FACILITY
CLWS MAGAZINE
ENLARGED CANOPY FRAMING PLAN

SCALE: NONE
EPROJECT NO.: 1667770
CONSTR. CONTR. NO.
NAVFAC DRAWING NO.
12894269
SHEET 26 OF 77
S-402

FILE NAME: C:\pw_workdir\dms003\jb2mhill_09050107\d1495963\S-402.dwg LAYOUT NAME: S-402 PLOTTED: Friday, June 13, 2025 - 9:17am USER: 09050107

THESE DRAWINGS ARE AN EXACT REPLICA OF THE STANDARD MAGAZINE TYPE "CLWS" PROVIDED BY NAVFAC. THE DESIGN WILL BE SITE ADAPTED AND MODIFIED TO MEET THE SPECIFIC GEOTECHNICAL AND LOADING CONDITIONS SPECIFIC TO NAVAL SUBMARINE BASE NEW LONDON, GROTON, CONNECTICUT.

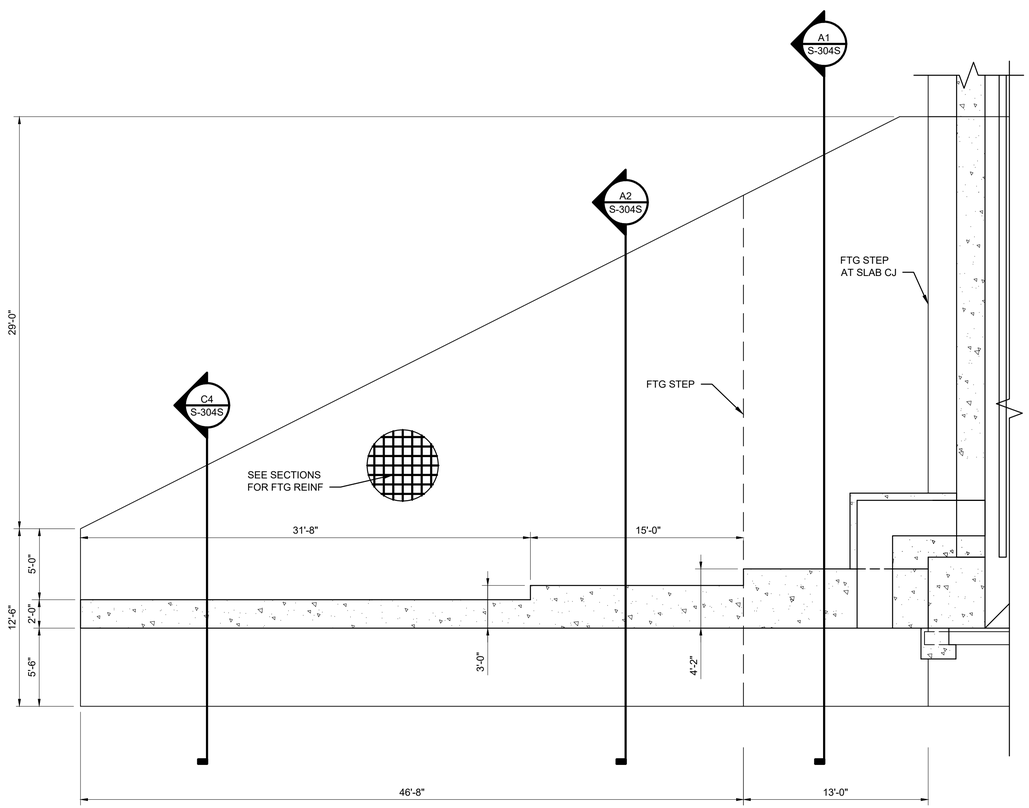

A1 RETAINING WALL "A" FOUNDATION
SCALE: 3/16" = 1'-0"

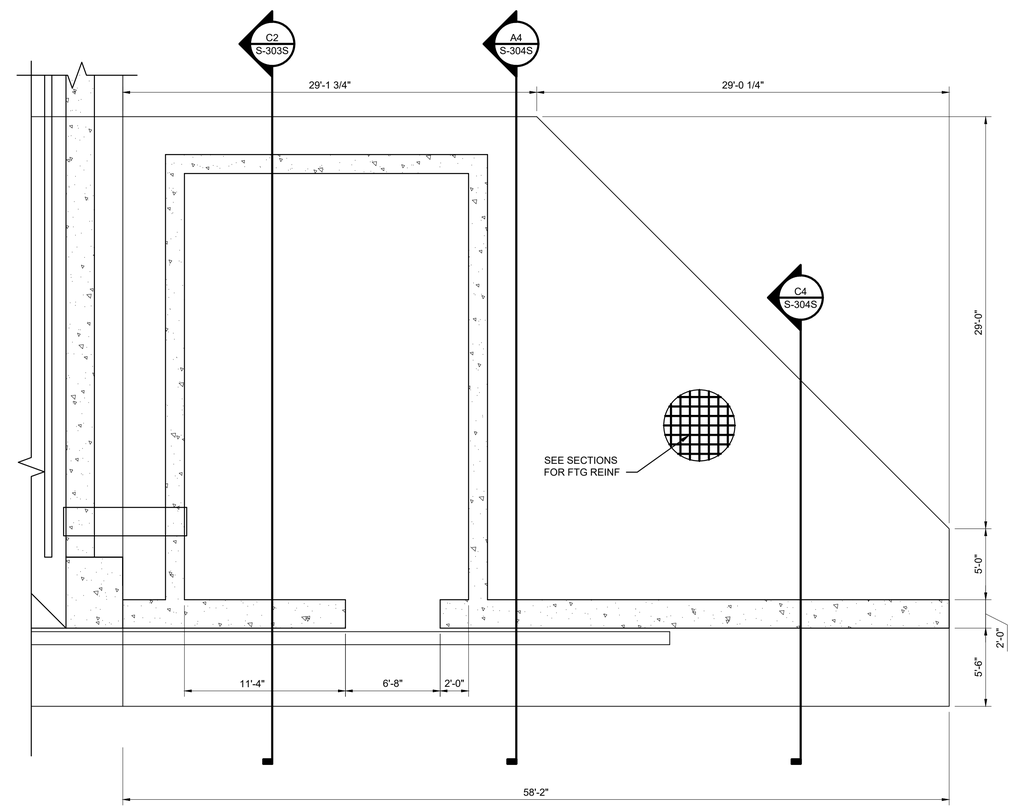

A3 RETAINING WALL "B" FOUNDATION
SCALE: 3/16" = 1'-0"

ORIGINAL STANDARD DRAWING IS NAVFAC DRAWING NUMBER 12877630 SHT 21 OF 51

SYM	DESCRIPTION	DATE	APPR

NAVFAC

SEAL

Jacobs
1100 NORTH GLEBE ROAD
SUITE 500
ARLINGTON, VIRGINIA 22201
571.218.1000
FAX: 571.218.1600

A/E INFO

APPROVED
FOR COMMANDER NAVFAC 8/14/2025

ACTIVITY
APPROVED BY LCDR ELIZABETH OLOKODE NAVFAC NLON FEAD DIRECTOR NEW LONDON, GROTON, CT

SATISFACTORY TO DATE 05/27/2025

DES	JAF	DRW	SFF	CHK	TPH
PM/DM	SMS/CWJ				
BRANCH MANAGER	NEK				
CHIEF ENG/ARCH	JWJ				
FIRE PROTECTION	HPN				

DEPARTMENT OF THE NAVY
NAVAL FACILITIES ENGINEERING SYSTEMS COMMAND - MID-ATLANTIC
MID-ATLANTIC
NAVAL FACILITIES ENGINEERING SYSTEMS COMMAND
NAVAL STATION - NORFOLK VA
NAVAL SUBMARINE BASE NEW LONDON
GROTON, CONNECTICUT
P-1102 WEAPONS MAGAZINE & ORDNANCE OPERATIONS FACILITY
CLWS MAGAZINE

ENLARGED PLAN VIEW RETAINING WALL

SCALE: NONE
EPROJECT NO.: 1667770
CONSTR. CONTR. NO.
NAVFAC DRAWING NO. 12894270
SHEET 27 OF 77

S-403

FILE NAME: C:\pw_workdir\dms0033\ch2mhill_00050107\d1495963\S-403.dwg LAYOUT NAME: S-403 PLOTTED: Friday, June 13, 2025 - 9:18am USER: 00050107

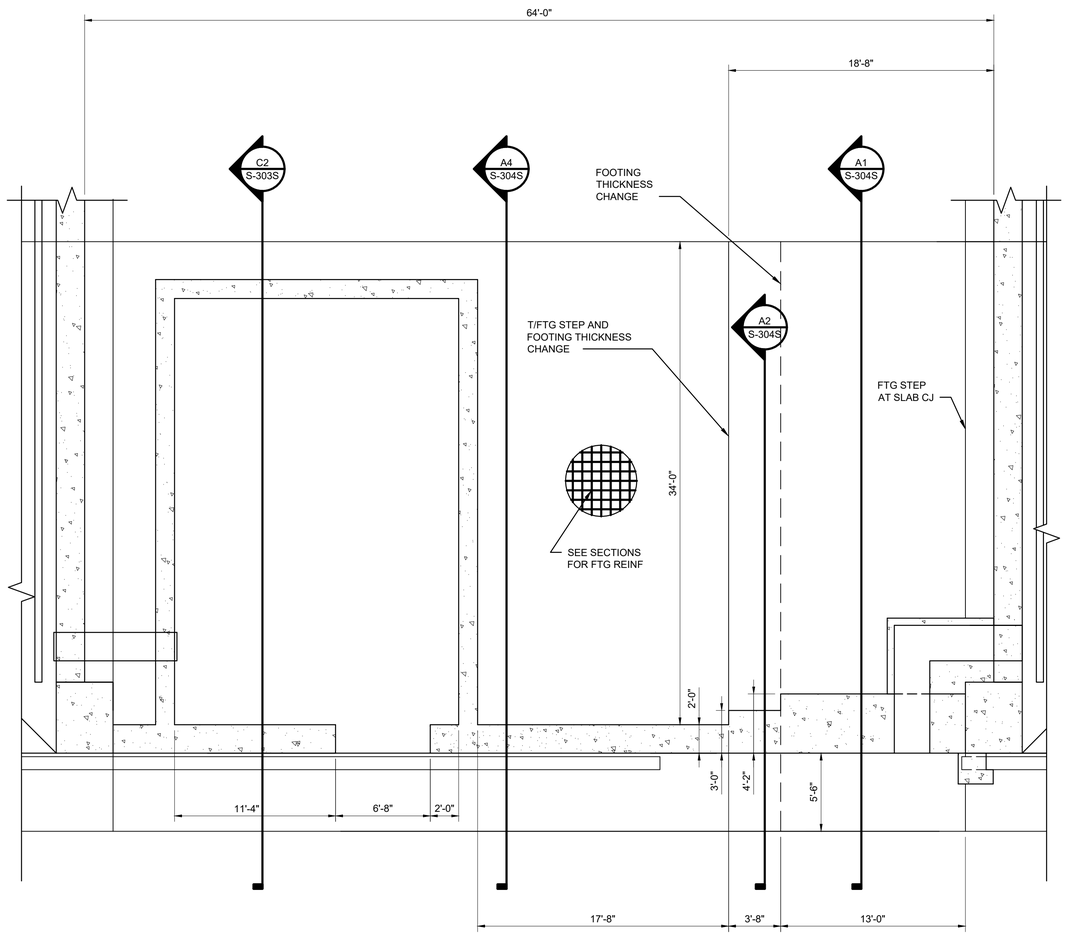

A1 RETAINING WALL "C" FOUNDATION
SCALE: 3/16" = 1'-0"
(BETWEEN CLWS MAGAZINES)

0 4' 8' 16'

THESE DRAWINGS HAVE BEEN ADAPTED FROM APPROVED NAVFAC MUNITIONS STORAGE CONSTRUCTION DOCUMENTS, NAVFAC DRAWING NUMBERS 12877610 TO 12877660, APPROVED BY DDESB ON 20 MARCH 2023. JACOBS DOR RESPONSIBILITY AND SEAL APPLICABILITY IS LIMITED TO THE SITE ADAPTATIONS AND MODIFICATIONS MADE TO THIS DRAWING.

SYM	DESCRIPTION	DATE	APPR.

NAVFAC

LAURA ARICO PRESLEY
REGISTERED ENGINEER
AGRICULTURE
COMMERCE
No. 106382
STATE OF TENNESSEE
06/27/2025
SEAL

Jacobs
1100 NORTH GLEBE ROAD
SUITE 500
ARLINGTON, VIRGINIA 22201
571.218.1000
FAX: 571.218.1600
A/E INFO

APPROVED
FOR COMMANDER NAVFAC 8/14/2025
ACTIVITY
APPROVED BY LCDR ELIZABETH OLOKODE NAVFAC NLON FEAD DIRECTOR NEW LONDON, GROTON, CT
SATISFACTORY TO DATE 05/27/2025

DES SB	DRW JC	CHK LAP
PM/DM	SMS/CWJ	
BRANCH MANAGER	NEK	
CHIEF ENG/ARCH	EJA	
FIRE PROTECTION	HPN	

DEPARTMENT OF THE NAVY
NAVAL FACILITIES ENGINEERING SYSTEMS COMMAND
MID-ATLANTIC
NAVAL FACILITIES ENGINEERING SYSTEMS COMMAND - MID-ATLANTIC
NAVAL STATION - NORFOLK VA
NAVAL SUBMARINE BASE NEW LONDON
GROTON, CONNECTICUT
P-1102 WEAPONS MAGAZINE & ORDINANCE OPERATIONS FACILITY
CLWS MAGAZINE
ENLARGED PLAN VIEW RETAINING WALL-SITE ADAPTED

SCALE: NONE
EPROJECT NO.: 1667770
CONSTR. CONTR. NO.
NAVFAC DRAWING NO.
12894271
SHEET 28 OF 77
S-404S

FILE NAME: C:\pw_workdir\den0033\ch2mhill_00050107\d1495963\S-404S.dwg LAYOUT NAME: S-404S PLOTTED: Friday, June 13, 2025 - 9:18am USER: 00050107

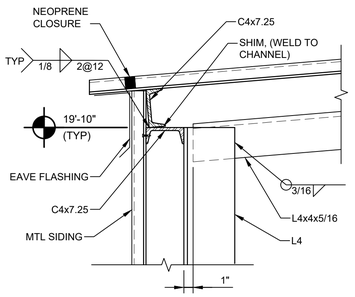

D1 DETAIL
SCALE: 1 1/2" = 1'-0"

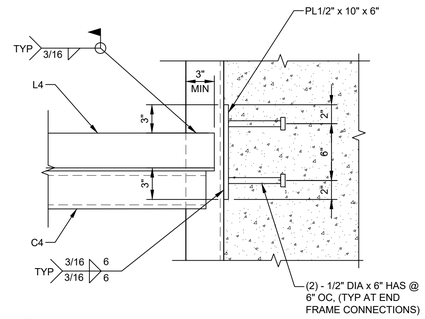

D2 DETAIL
SCALE: 1 1/2" = 1'-0"

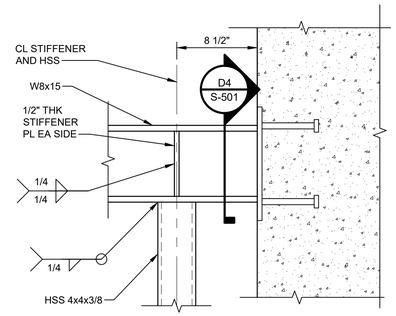

D3 DETAIL
SCALE: 1 1/2" = 1'-0"

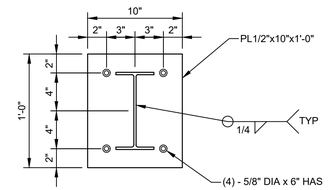

D4 SECTION
SCALE: 1 1/2" = 1'-0"

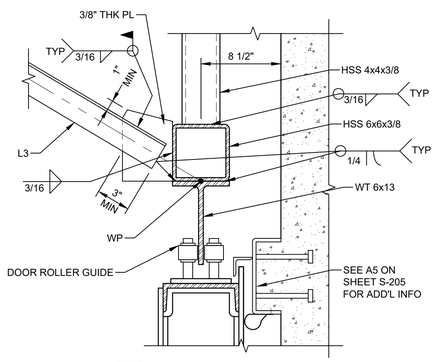

NOTES:
DOOR ROLLER GUIDE MUST HAVE A 9 KIP MINIMUM LATERAL LOAD CAPACITY. WELD DOOR ROLLER GUIDE PER MANUFACTURER'S RECOMMENDATIONS.

B1 ENLARGE DETAIL
SCALE: 1 1/2" = 1'-0"

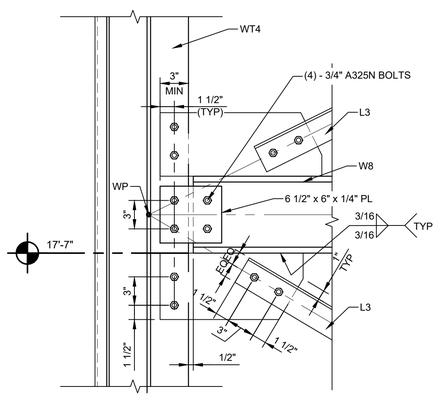

B2 DETAIL
SCALE: 1 1/2" = 1'-0"

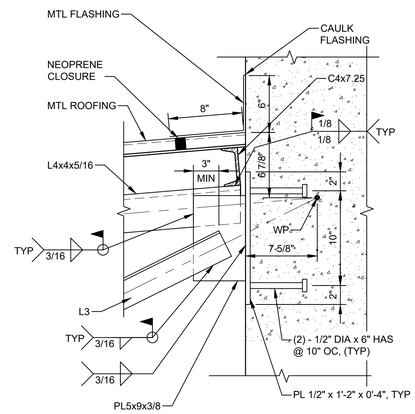

B3 DETAIL
SCALE: 1 1/2" = 1'-0"

THESE DRAWINGS ARE AN EXACT REPLICA OF THE STANDARD MAGAZINE TYPE "CLWS" PROVIDED BY NAVFAC. THE DESIGN WILL BE SITE ADAPTED AND MODIFIED TO MEET THE SPECIFIC GEOTECHNICAL AND LOADING CONDITIONS SPECIFIC TO NAVAL SUBMARINE BASE NEW LONDON, GROTON, CONNECTICUT.

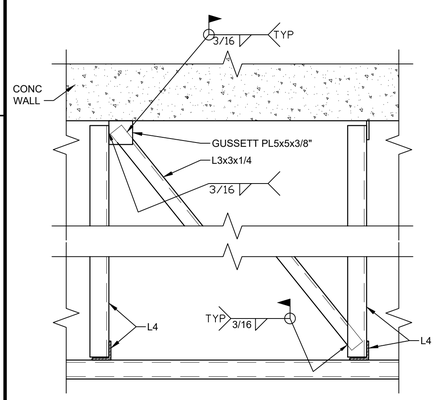

A1 DETAIL
SCALE: 3/4" = 1'-0"

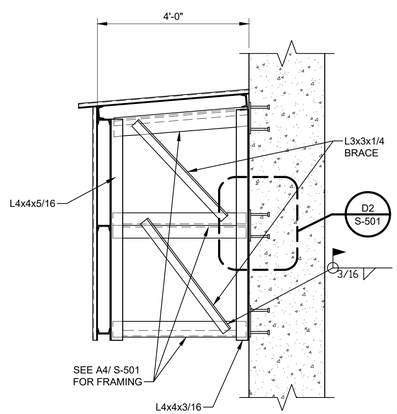

A2 SECTION
SCALE: 1/2" = 1'-0"

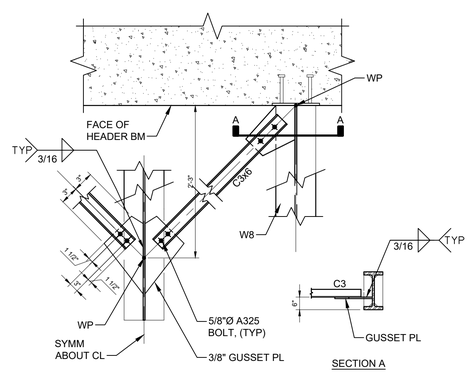

A3 DETAIL
SCALE: 3/4" = 1'-0"

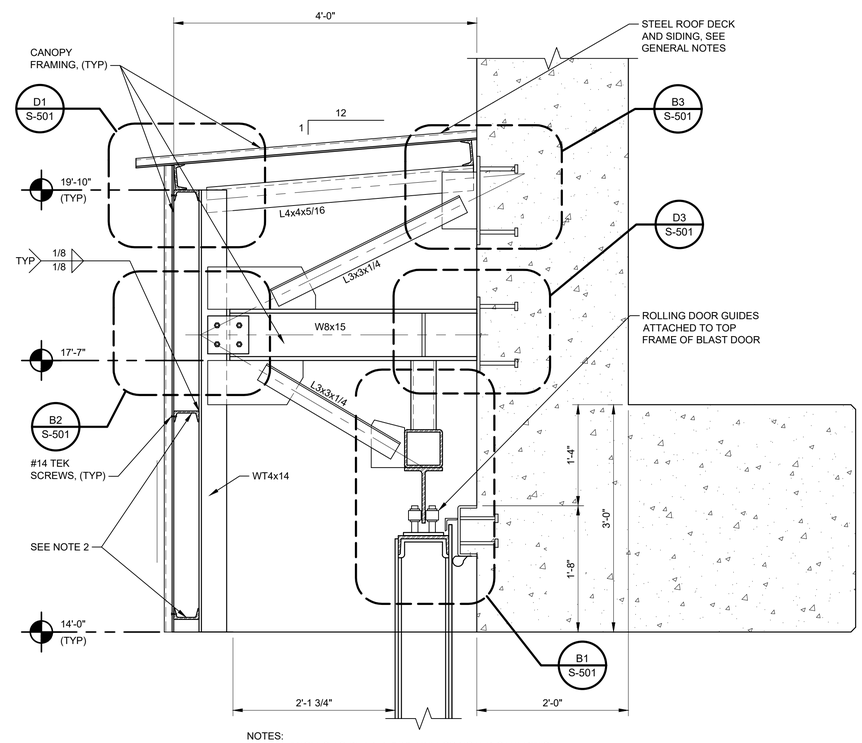

NOTES:
1. ALL ANGLES TO BE L4x4x5/16, UNLESS NOTED OTHERWISE.
2. ALL PURLINS AND GIRTS TO BE C4x7.25.

A4 SECTION
SCALE: 1" = 1'-0"

ORIGINAL STANDARD DRAWING IS NAVFAC DRAWING NUMBER 12877631 SHT 22 OF 51

SYM	DESCRIPTION	DATE	APPR.

NAVFAC

SEAL

Jacobs
1100 NORTH GLEBE ROAD
SUITE 500
ARLINGTON, VIRGINIA 22201
571.218.1000
FAX: 571.218.1600
A/E INFO

APPROVED
FOR COMMANDER NAVFAC 8/14/2025

ACTIVITY
APPROVED BY LCDR ELIZABETH OLOKODE NAVFAC NLON FEAD DIRECTOR NEW LONDON, GROTON, CT

SATISFACTORY TO	DATE	05/27/2025
DES JAF	DRW SFF	CHK TPH
PM/DM		SMS/CWJ
BRANCH MANAGER		NEK
CHIEF ENG/ARCH		JWJ
FIRE PROTECTION		HPN

DEPARTMENT OF THE NAVY
NAVAL FACILITIES ENGINEERING SYSTEMS COMMAND
MID-ATLANTIC
NAVAL FACILITIES ENGINEERING SYSTEMS COMMAND - MID-ATLANTIC
NAVAL STATION - NORFOLK, VA
NAVAL SUBMARINE BASE NEW LONDON
GROTON, CONNECTICUT
P-1102 WEAPONS MAGAZINE & ORDNANCE OPERATIONS FACILITY
CLWS MAGAZINE

DOOR GUIDE AND CANOPY DETAILS

SCALE:	NONE
EPROJECT NO.:	1667770
CONSTR. CONTR. NO.	
NAVFAC DRAWING NO.	12894272
SHEET	29 OF 77

S-501

FILE NAME: C:\pw_workdir\ent003\ct2mnlil_09050107\d1495963\S-501.dwg LAYOUT NAME: S-501 PLOTTED: Friday, June 13, 2025 – 8:18am USER: 09050107

THESE DRAWINGS ARE AN EXACT REPLICA OF THE STANDARD MAGAZINE TYPE "CLWS" PROVIDED BY NAVFAC. THE DESIGN WILL BE SITE ADAPTED AND MODIFIED TO MEET THE SPECIFIC GEOTECHNICAL AND LOADING CONDITIONS SPECIFIC TO NAVAL SUBMARINE BASE NEW LONDON, GROTON, CONNECTICUT.

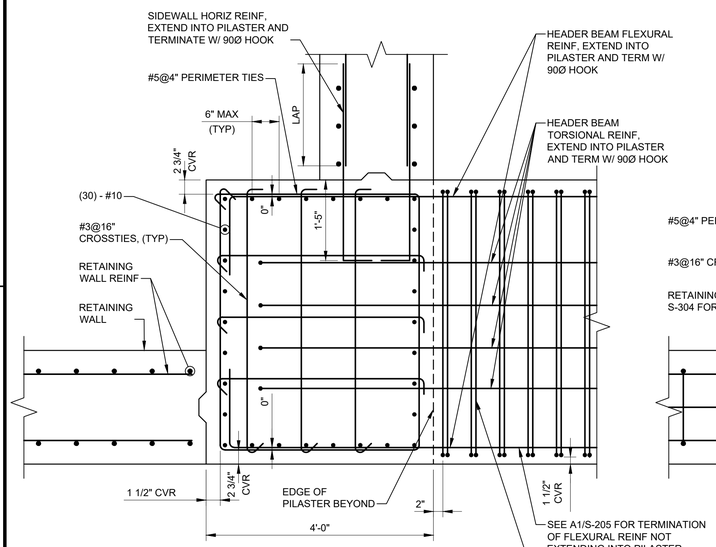

NOTES:

1. THE 0" DIMENSION IMPLIES HEADER BEAM FLEXURAL REINFORCEMENT AND PILASTER PERIMETER TIES OCCUR IN THE SAME VERTICAL PLANE.

C1 PILASTER - THRU HEADER BEAM

SCALE: 3/4" = 1'-0"

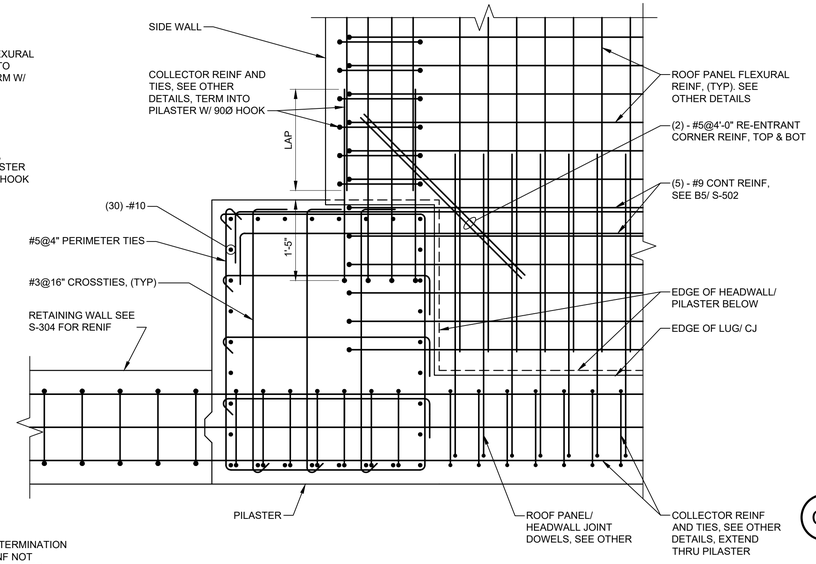

C2 PILASTER - THRU ROOF SLAB

SCALE: 3/4" = 1'-0"

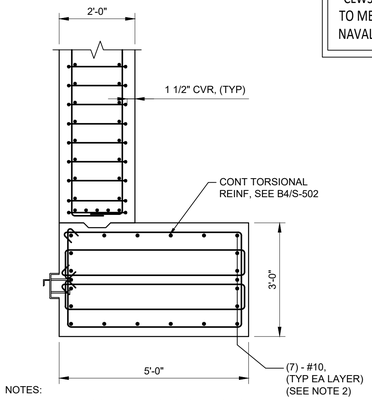

NOTES:

1. DOOR AND DOOR GUIDE NOT SHOWN FOR CLARITY.
2. FLEXURAL REINFORCEMENT SHOWN IS CONTINUOUS FROM MIDSPAN CONDITION (B4/S-502). REMAINING FLEXURAL REINFORCEMENT IS TERMINATED (C1/S-502) AND NOT SHOWN ON THIS DETAIL. SEE DETAIL A1/S-205 FOR TERMINATION OF FLEXURAL REINFORCEMENT.
3. REF B4/S-502 FOR INFORMATION NOT REPEATED.

C4 HEADER BEAM END

SCALE: 1/2" = 1'-0"

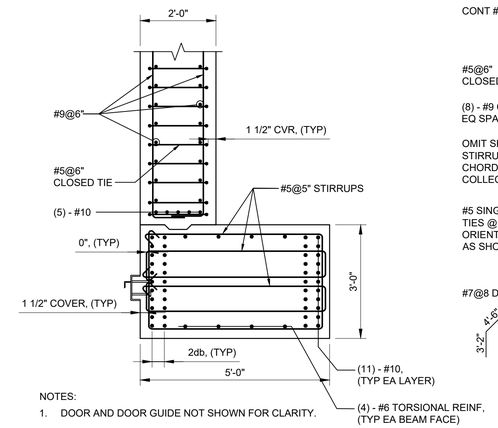

NOTES:

1. DOOR AND DOOR GUIDE NOT SHOWN FOR CLARITY.

B4 HEADER BEAM MIDSPAN

SCALE: 1/2" = 1'-0"

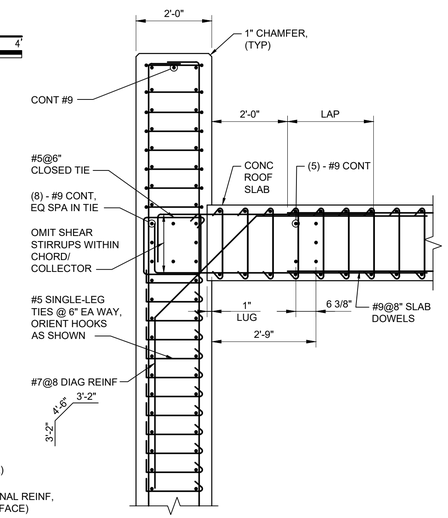

B5 SECTION

SCALE: 1/2" = 1'-0"

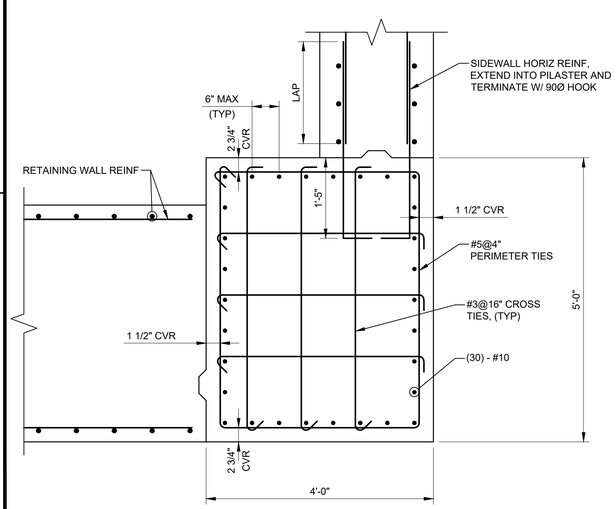

A1 PILASTER - BELOW HEADER BEAM

SCALE: 3/4" = 1'-0"

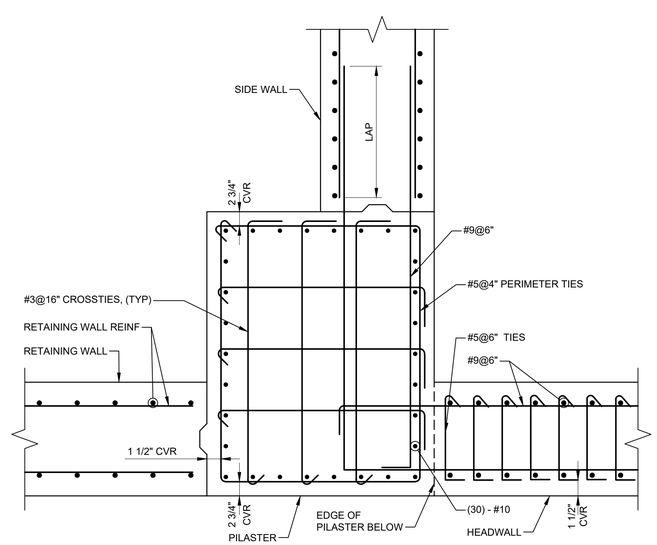

A2 PILASTER - ABOVE HEADER BEAM (@ HEADWALL)

SCALE: 3/4" = 1'-0"

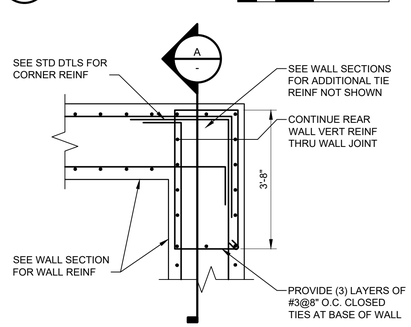

A4 BOUNDARY ELEMENTS TIE REINF AT CORNERS (SIM)

SCALE: 1/2" = 1'-0"

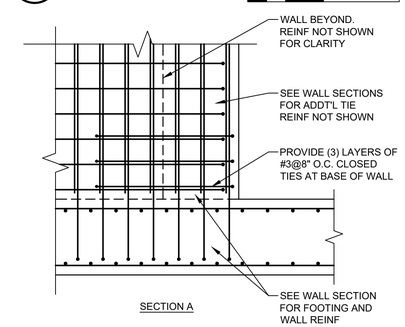

SECTION A

ORIGINAL STANDARD DRAWING IS NAVFAC DRAWING NUMBER 12877632 SHT 23 OF 51

SYM	DESCRIPTION	DATE	APPR

NAVFAC

SEAL

Jacobs
1100 NORTH GLEBE ROAD
SUITE 500
ARLINGTON, VIRGINIA 22201
571.218.1000
FAX: 571.218.1600

A/E INFO

APPROVED

FOR COMMANDER NAVFAC 8/14/2025

ACTIVITY
APPROVED BY LCDR ELIZABETH OLOKODE NAVFAC NLON FEAD DIRECTOR NEW LONDON, GROTON, CT

SATISFACTORY TO DATE 05/27/2025

DES	JAF	DRW SFF	CHK TPH
PM/DM	SMS/CWJ		
BRANCH MANAGER	NEK		
CHIEF ENG/ARCH	JWJ		
FIRE PROTECTION	HPN		

DEPARTMENT OF THE NAVY
NAVAL FACILITIES ENGINEERING SYSTEMS COMMAND
MID-ATLANTIC

NAVAL FACILITIES ENGINEERING SYSTEMS COMMAND - MID-ATLANTIC
NAVAL STATION - NORFOLK, VA

NAVAL SUBMARINE BASE NEW LONDON

GROTON, CONNECTICUT

P-1102 WEAPONS MAGAZINE & ORDNANCE OPERATIONS FACILITY
CLWS MAGAZINE

PILASTER AND BOUNDARY ELEMENTS REINF DETAILS

SCALE: NONE
EPROJECT NO.: 1667770
CONSTR. CONTR. NO.

NAVFAC DRAWING NO.
12894273

SHEET 30 OF 77

S-502

FILE NAME: C:\pw_work\dc\den003\ch2mhill_09050107\d1495963\S-502.dwg LAYOUT NAME: S-502 PLOTTED: Friday, June 13, 2025 - 9:18am USER: 09050107

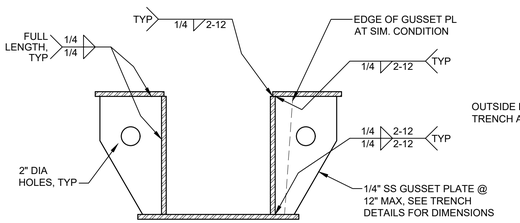

NOTES:
1. ALL TRENCH PLATES ARE 1/2" THK SS, UNO.
2. SEE TRENCH DETAILS FOR OVERALL SIZE OF TRENCH PLATE ASSEMBLY.
3. TRENCH PL MFR TO PROVIDE OVERSIZE BOLT HOLES ON TRENCH BOTTOM PL FOR ACCESS OF SOLE PL ANCHOR BOLTS TO CONC.

D1 TRENCH ASSEMBLY AND WELDMENT
SCALE: 1 1/2" = 1'-0"

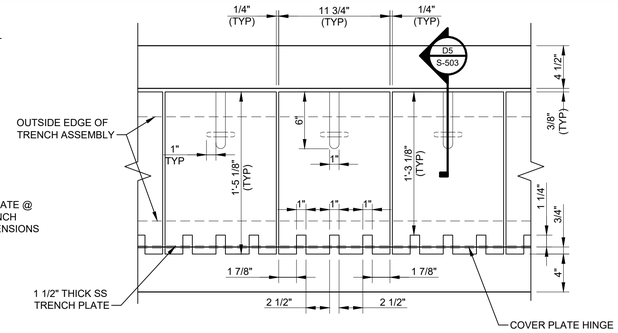

D2 TRENCH COVER PLATE AT MAGAZINE DOOR
SCALE: 1 1/2" = 1'-0"

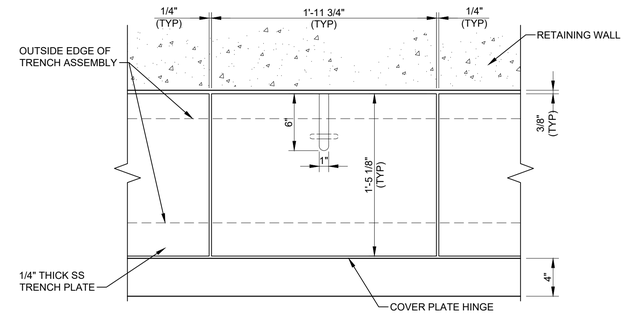

D3 TRENCH COVER PLATE AT RETAINING WALL
SCALE: 1 1/2" = 1'-0"

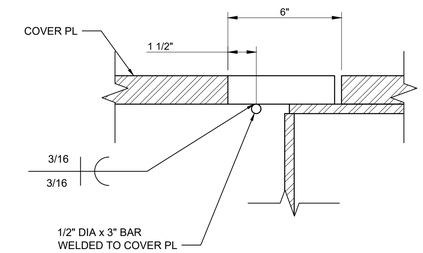

D5 DETAIL - TRENCH PLATE MANUAL LIFT
SCALE: 3" = 1'-0"

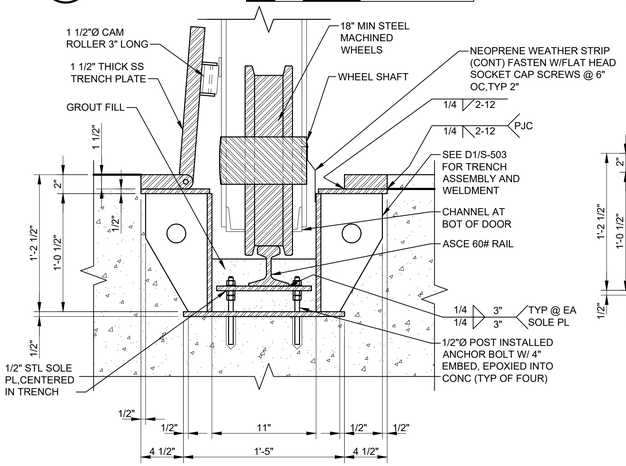

B1 TRENCH AT MAGAZINE OPENING
SCALE: 1 1/2" = 1'-0"

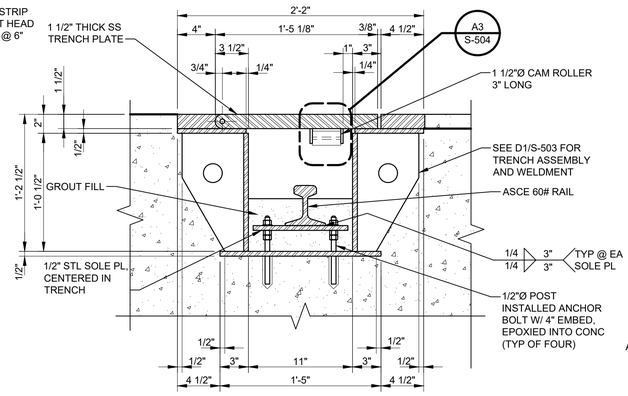

B2 TRENCH AT MAGAZINE WITH CLOSED COVER
SCALE: 1 1/2" = 1'-0"

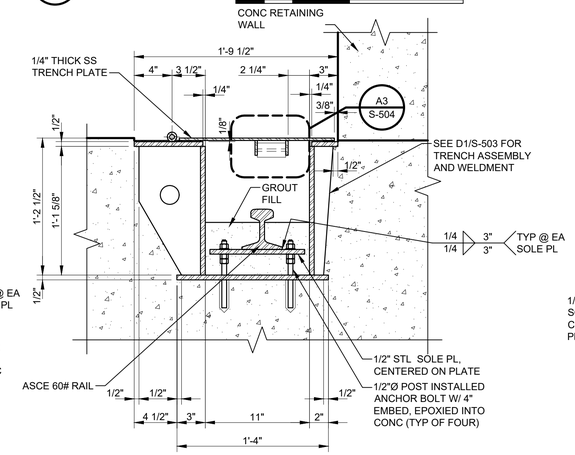

B3 TRENCH AT RETAINING WALL WITH CLOSED COVER
SCALE: 1 1/2" = 1'-0"

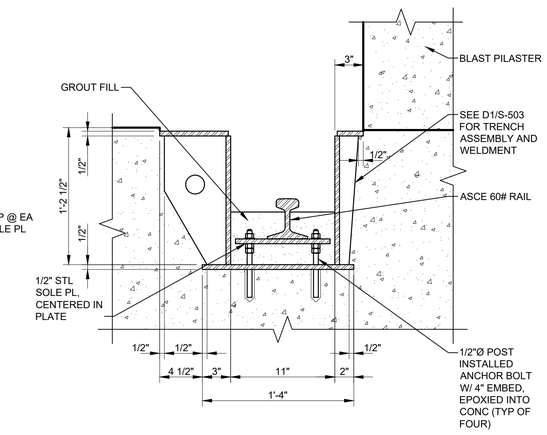

B5 TRENCH AT PILASTER WITH NO COVER
SCALE: 1 1/2" = 1'-0"

THESE DRAWINGS ARE AN EXACT REPLICA OF THE STANDARD MAGAZINE TYPE "CLWS" PROVIDED BY NAVFAC. THE DESIGN WILL BE SITE ADAPTED AND MODIFIED TO MEET THE SPECIFIC GEOTECHNICAL AND LOADING CONDITIONS SPECIFIC TO NAVAL SUBMARINE BASE NEW LONDON, GROTON, CONNECTICUT.

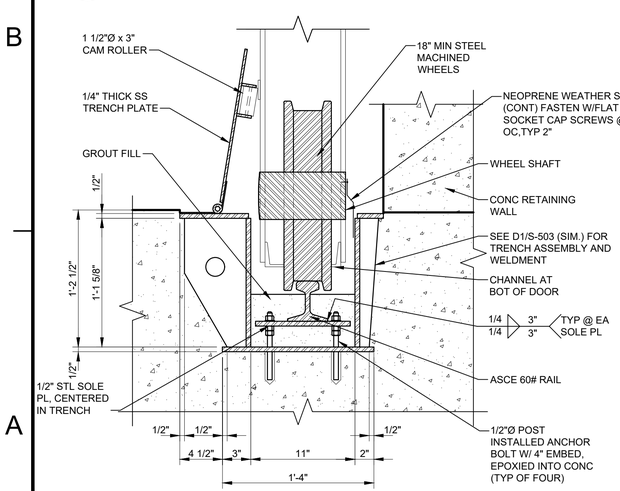

A1 TRENCH AT RETAINING WALL
SCALE: 1 1/2" = 1'-0"

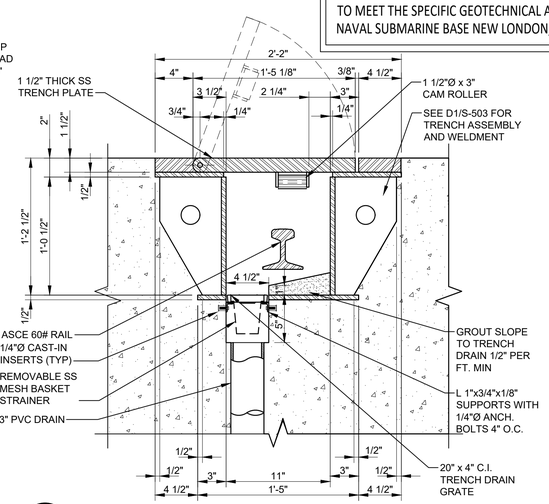

A2 TRENCH AT MAGAZINE AT DRAIN
SCALE: 1 1/2" = 1'-0"

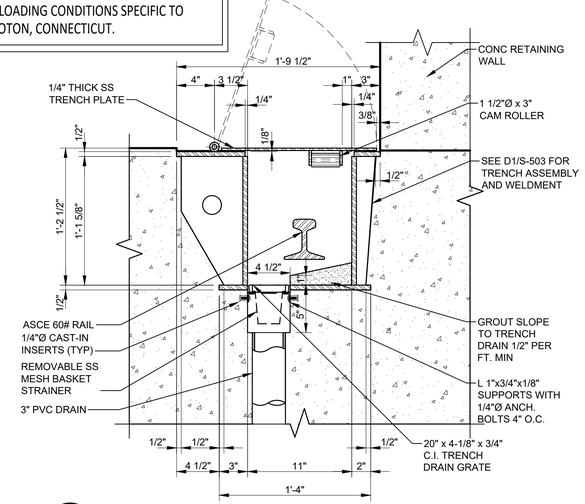

A3 TRENCH AT RETAINING WALL AT DRAIN
SCALE: 1 1/2" = 1'-0"

NOTE:
1. DIMENSION NOTED WITH AN (*) MUST BE COORDINATED WITH FIELD TOLERANCES TO PROVIDE A LEVEL RAIL AND TO PROVIDE THE REQUIRED DOOR BEARING SURFACE.

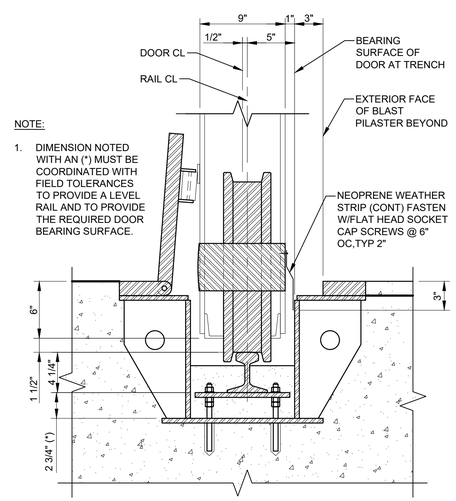

A5 DOOR ALIGNMENT AT TRENCH
SCALE: 1 1/2" = 1'-0"

ORIGINAL STANDARD DRAWING IS NAVFAC DRAWING NUMBER 12877633 SHT 24 OF 51

SYM	DESCRIPTION	DATE	APPR.

NAVFAC

Jacobs
1100 NORTH GLEBE ROAD
SUITE 500
ARLINGTON, VIRGINIA 22201
571.218.1000
FAX: 571.218.1600

A/E INFO

APPROVED
FOR COMMANDER NAVFAC 8/14/2025

ACTIVITY
APPROVED BY LCDR ELIZABETH OLOKODE NAVFAC NLON FEAD DIRECTOR NEW LONDON, GROTON, CT

SATISFACTORY TO DATE 05/27/2025

DES	DRW	CHK
JAF	SFF	TPH

PM/DM SMS/CWJ
BRANCH MANAGER NEK
CHIEF ENG/ARCH JWJ
FIRE PROTECTION HPN

DEPARTMENT OF THE NAVY
NAVAL FACILITIES ENGINEERING SYSTEMS COMMAND
MID-ATLANTIC

NAVAL FACILITIES ENGINEERING SYSTEMS COMMAND - MID-ATLANTIC
NAVAL STATION - NORFOLK, VA

NAVAL SUBMARINE BASE NEW LONDON
GROTON, CONNECTICUT

P-1102 WEAPONS MAGAZINE & ORDNANCE OPERATIONS FACILITY
CLWS MAGAZINE

DOOR, TRENCH AND COVER DETAILS

SCALE: NONE
EPROJECT NO.: 1667770
CONSTR. CONTR. NO.
NAVFAC DRAWING NO. 12894274
SHEET 31 OF 77

S-503

FILE NAME: C:\pw_work\dr\dem003\ch2mhill_09050107\d1495963\S-503.dwg LAYOUT NAME: S-503 PLOTTED: Friday, June 13, 2025 - 9:19am USER: 09050107

GENERAL PLOW NOTES:

1. ALL PLATES ARE 1/4" THICK PLATE UNLESS NOTED OTHERWISE IN DETAILS.
2. WELD ALL JOINTS 3/16" FILLET UNLESS NOTED OTHERWISE.
3. DIMENSIONS NOTED WITH AN (*) MUST BE COORDINATED WITH PLOW MANUFACTURER ENSURING THAT DOOR TRENCH COVER ROLLER HAS A SMOOTH TRANSITION BETWEEN CLOSED AND OPEN POSITIONS.

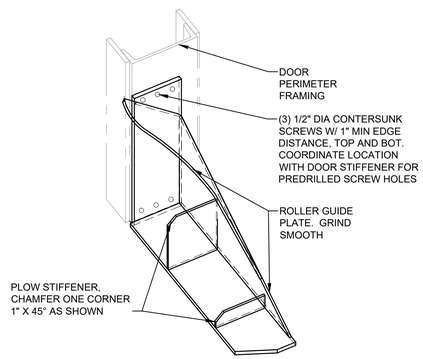

C2 DETAIL - PLATE PLOW ISOMETRIC VIEW
SCALE: 1 1/2" = 1'-0"

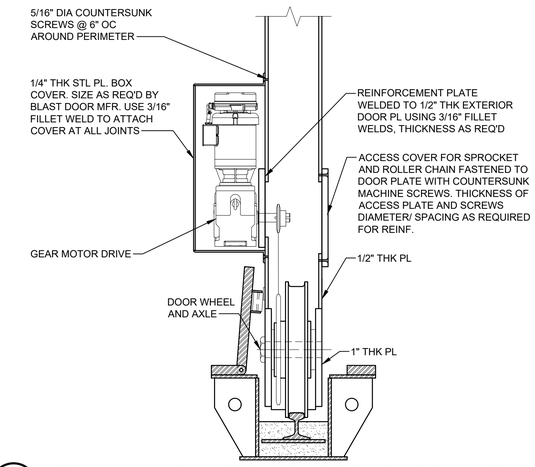

C3 DETAIL - DOOR ALTERNATIVE DRIVE ARRANGEMENT
SCALE: 1" = 1'-0"

DESIGN/MANUFACTURING NOTES:

1. MOTOR INSTALLATION SHOWN IS NOTIONAL AND IS FOR BIDDING PURPOSES AND MAY VARY BASED ON DOOR MANUFACTURER'S APPROVED DESIGN.
2. DOOR MANUFACTURER'S DESIGN MUST ALLOW FOR MAINTENANCE OF THE MOTOR ASSEMBLY AND ITS COMPONENTS, INCLUDING REMOVAL OF AND REPLACEMENT OF THE MOTOR ASSEMBLY.
3. USE STANDARD PARTS AS MUCH AS POSSIBLE.
4. ACCESS TO THE MOTOR ASSEMBLY IS NOT NECESSARILY LIMITED TO ONE SIDE OF THE DOOR. IF ACCESS TO BOTH SIDES OF THE DOOR IS USED, IT MUST BE SHOWN THAT THE WHEEL LOAD PATH THROUGH THE SUPPORTING PLATES IS ADEQUATE.
5. A MOTOR ASSEMBLY MOUNTED INTERNAL TO THE DOOR IS PREFERRED; HOWEVER, A MOTOR ASSEMBLY MOUNTED ON THE EXTERIOR OF THE DOOR MAY BE ACCEPTABLE IF APPROVED.

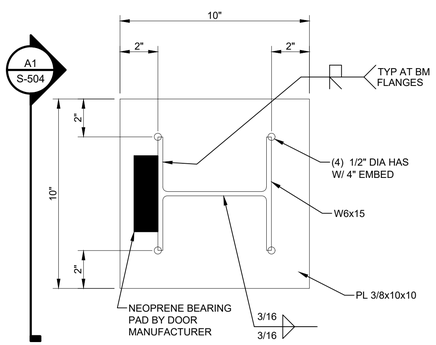

B1 DETAIL - DOOR STOP
SCALE: 3" = 1'-0"

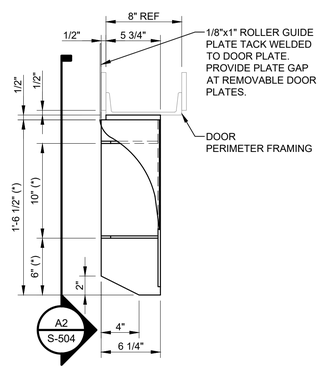

B2 DETAIL - PLATE PLOW PLAN
SCALE: 1 1/2" = 1'-0"

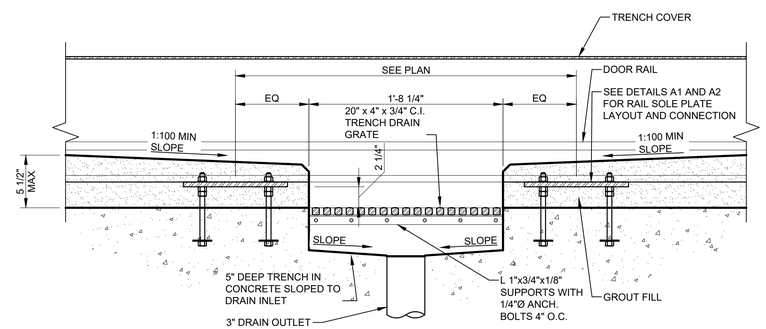

B3 TRENCH DRAIN BLOCKOUT
SCALE: 1 1/2" = 1'-0"

THESE DRAWINGS ARE AN EXACT REPLICA OF THE STANDARD MAGAZINE TYPE "CLWS" PROVIDED BY NAVFAC. THE DESIGN WILL BE SITE ADAPTED AND MODIFIED TO MEET THE SPECIFIC GEOTECHNICAL AND LOADING CONDITIONS SPECIFIC TO NAVAL SUBMARINE BASE NEW LONDON, GROTON, CONNECTICUT.

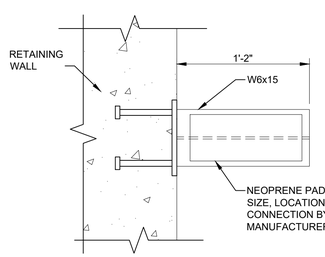

A1 SECTION - DOOR STOP
SCALE: 1 1/2" = 1'-0"

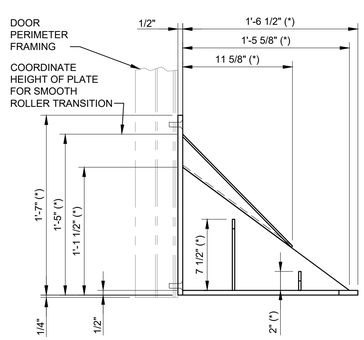

A2 DETAIL - PLATE PLOW SIDE ELEVATION
SCALE: 1 1/2" = 1'-0"

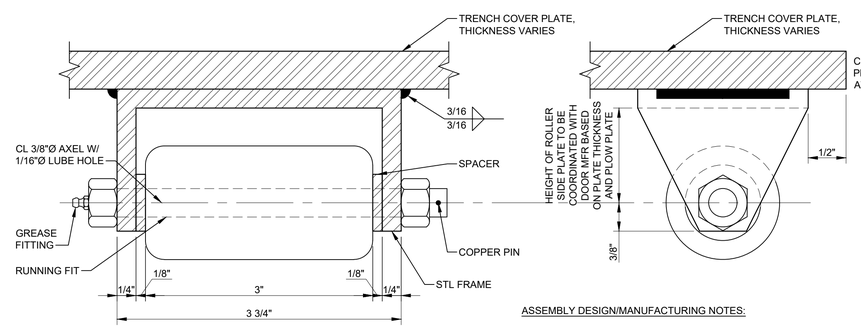

ASSEMBLY DESIGN/MANUFACTURING NOTES:

1. ASSEMBLY SHOWN IS NOTIONAL AND IT IS FOR BIDDING PURPOSES. ASSEMBLY MAY VARY BASED ON DOOR MANUFACTURER'S DESIGN.

A3 TYPICAL TRENCH COVER ROLLER
SCALE: 1:1

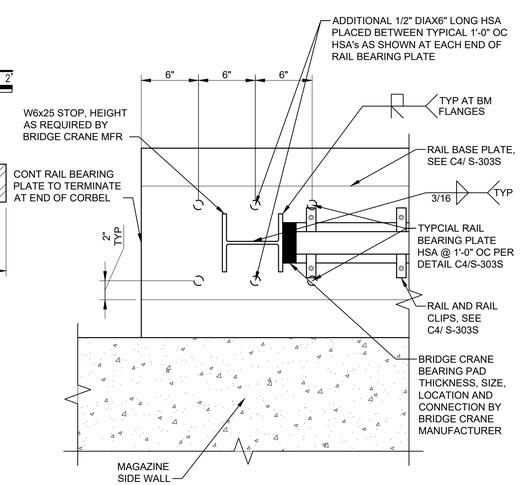

A5 BRIDGE CRANE RAIL STOP
SCALE: 1 1/2" = 1'-0"

ORIGINAL STANDARD DRAWING IS NAVFAC DRAWING NUMBER 12877634 SHT 25 OF 51

SYM	DESCRIPTION	DATE	APPR

NAVFAC

SEAL

Jacobs
1100 NORTH GLEBE ROAD
SUITE 500
ARLINGTON, VIRGINIA 22201
571.218.1000
FAX: 571.218.1600

A/E INFO

APPROVED
FOR COMMANDER NAVFAC 8/14/2025

ACTIVITY
APPROVED BY LCDR ELIZABETH OLOKODE NAVFAC NLON FEAD DIRECTOR NEW LONDON, GROTON, CT

SATISFACTORY TO DATE 05/27/2025

DES JAF	DRW SFF	CHK TPH	
PM/DM	SMS/CWJ		
BRANCH MANAGER	NEK		
CHIEF ENG/ARCH	JWJ		
FIRE PROTECTION	HPN		

DEPARTMENT OF THE NAVY
NAVAL FACILITIES ENGINEERING SYSTEMS COMMAND
MID-ATLANTIC

NAVAL FACILITIES ENGINEERING SYSTEMS COMMAND - MID-ATLANTIC
NAVAL STATION - NORFOLK, VA

NAVAL SUBMARINE BASE NEW LONDON
GROTON, CONNECTICUT

P-1102 WEAPONS MAGAZINE & ORDNANCE OPERATIONS FACILITY
CLWS MAGAZINE

DOOR STOP, PLOW AND TRENCH COVER ROLLER DETAILS

SCALE: NONE
EPROJECT NO.: 1667770
CONSTR. CONTR. NO.
NAVFAC DRAWING NO. 12894275
SHEET 32 OF 77
S-504

FILE NAME: C:\pw_workdir\dem003\ch2mhill_09050107\d1495963\S-504.dwg LAYOUT NAME: S-504 PLOTTED: Friday, June 13, 2025 - 9:19am USER: 09050107

THESE DRAWINGS ARE AN EXACT REPLICA OF THE STANDARD MAGAZINE TYPE "CLWS" PROVIDED BY NAVFAC. THE DESIGN WILL BE SITE ADAPTED AND MODIFIED TO MEET THE SPECIFIC GEOTECHNICAL AND LOADING CONDITIONS SPECIFIC TO NAVAL SUBMARINE BASE NEW LONDON, GROTON, CONNECTICUT.

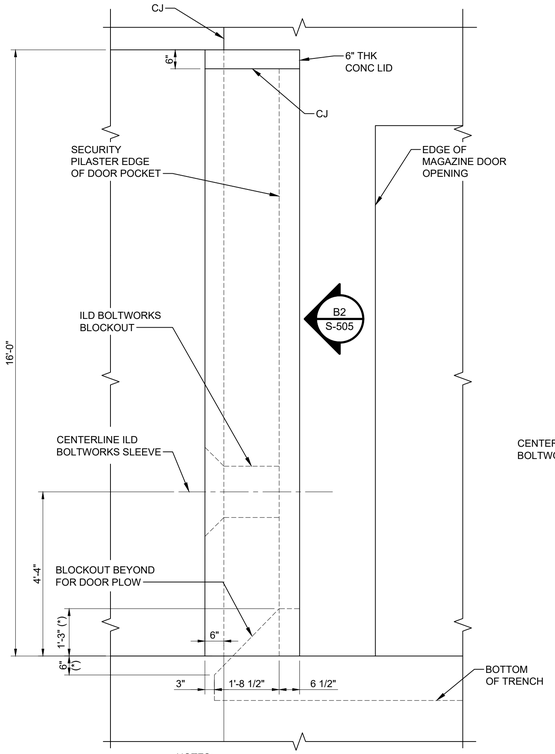

NOTES:
1. DIMENSIONS NOTED WITH AN (*) MUST BE COORDINATED BY THE DOOR MANUFACTURER ENSURING THE DOOR SYSTEM PERFORMS AS INTENDED.

B1 SECURITY PILASTER ELEVATION FROM FRONT OF MAGAZINE
SCALE: 1/2" = 1'-0"

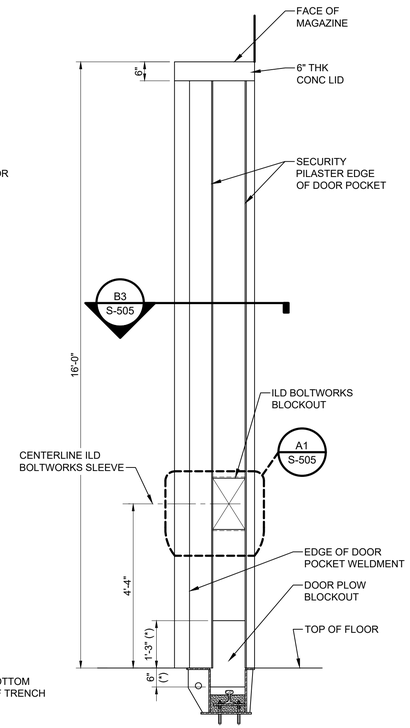

NOTES:
1. DIMENSIONS NOTED WITH AN (*) MUST BE COORDINATED BY THE DOOR MANUFACTURER ENSURING THE DOOR SYSTEM PERFORMS AS INTENDED.

B2 SECURITY PILASTER ELEVATION
SCALE: 1/2" = 1'-0"

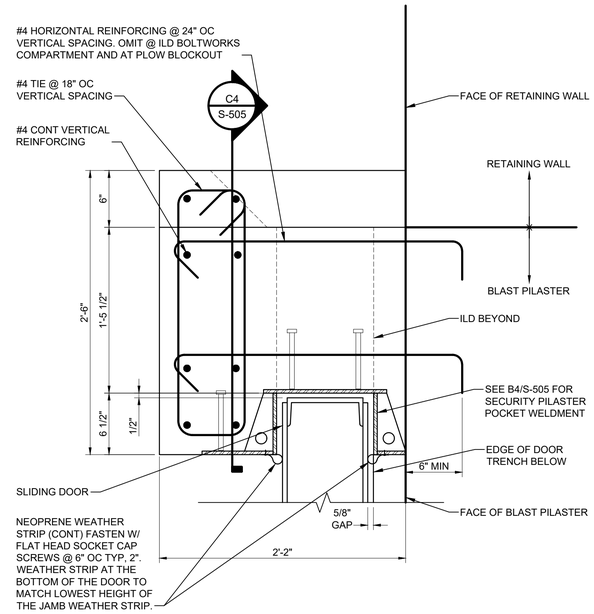

B3 SECTION - TYP SECURITY PILASTER
SCALE: 1 1/2" = 1'-0"

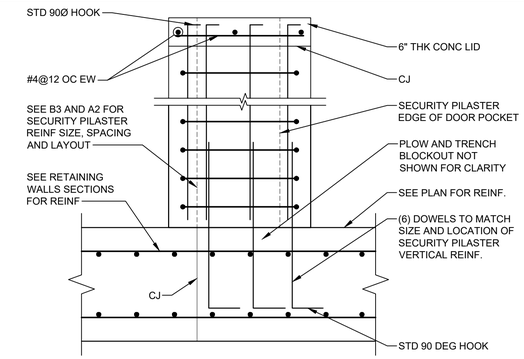

C4 SECURITY PILASTER REINFORCEMENT
SCALE: 3/4" = 1'-0"

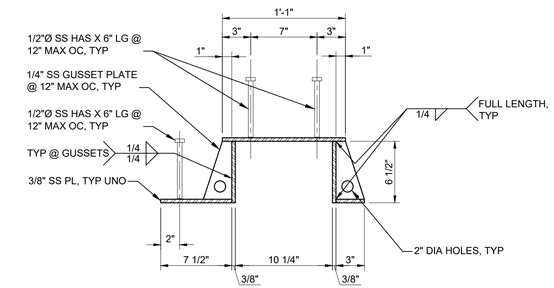

B4 DETAIL - TYP SECURITY PILASTER POCKET WELDMENT
SCALE: 3" = 1'-0"

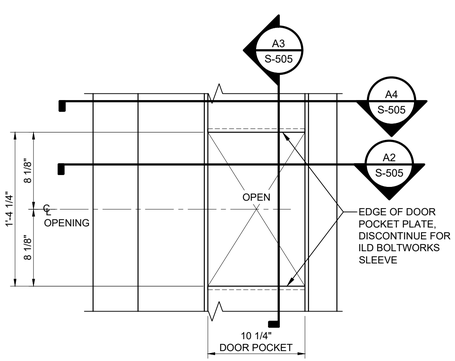

A1 DETAIL - ILD BOLTWORKS
SCALE: 1 1/2" = 1'-0"

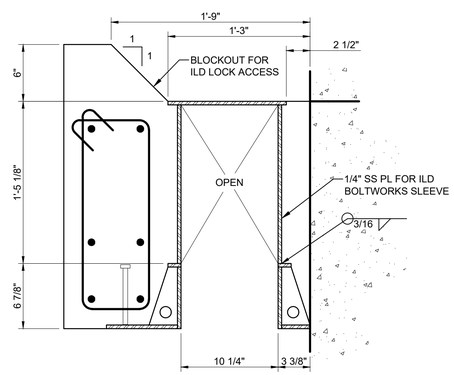

NOTE: SEE DETAIL A3/ THIS SHEET FOR INFORMATION NOT REPEATED

A2 DETAIL - ILD BOLTWORKS
SCALE: 1 1/2" = 1'-0"

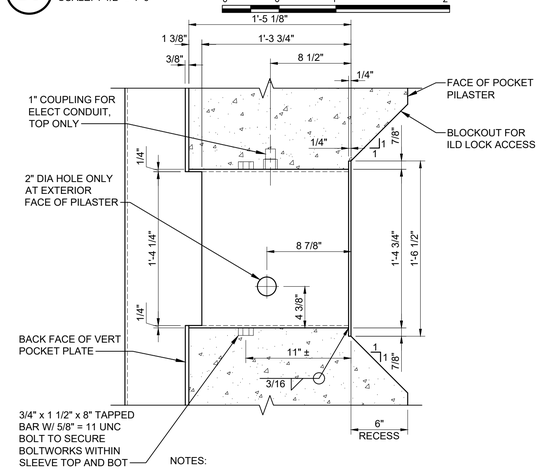

NOTES:
1. ALL BOX SLEEVE PLATES TO BE 1/4" THICK STAINLESS STEEL PLATES, UNO.
2. ALL WELDS AT EXTERIOR OF BOX ONLY

A3 DETAIL - ILD BOLTWORKS SLEEVE
SCALE: 1 1/2" = 1'-0"

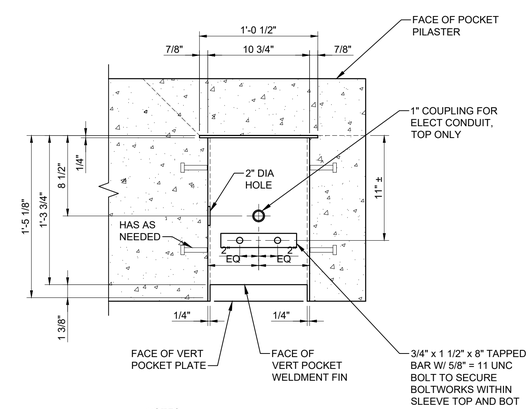

NOTES:
1. ALL BOX SLEEVE PLATES TO BE 1/4" THICK STAINLESS STEEL PLATES, UNO.
2. ALL WELDS AT EXTERIOR OF BOX ONLY

A4 DETAIL - ILD BOLTWORKS SLEEVE (TOP VIEW)
SCALE: 1 1/2" = 1'-0"

ORIGINAL STANDARD DRAWING IS NAVFAC DRAWING NUMBER 12877635 SHT 26 OF 51

SYM	DESCRIPTION	DATE	APPR

NAVFAC

SEAL

Jacobs
1100 NORTH GLEBE ROAD
SUITE 500
ARLINGTON, VIRGINIA 22201
571.218.1000
FAX: 571.218.1600

A/E INFO

APPROVED
FOR COMMANDER NAVFAC 8/14/2025

ACTIVITY
APPROVED BY LCDR ELIZABETH OLOKODE NAVFAC NLON FEAD DIRECTOR NEW LONDON, GROTON, CT

SATISFACTORY TO DATE 05/27/2025

DES	JAF	DRW	SFF	CHK	TPH

PM/DM	SMS/CWJ
BRANCH MANAGER	NEK
CHIEF ENG/ARCH	JWJ
FIRE PROTECTION	HPN

DEPARTMENT OF THE NAVY
NAVAL FACILITIES ENGINEERING SYSTEMS COMMAND
MID-ATLANTIC
NAVAL SUBMARINE BASE NEW LONDON

NAVAL FACILITIES ENGINEERING SYSTEMS COMMAND
NAVAL FACILITIES ENGINEERING SYSTEMS COMMAND - MID-ATLANTIC
NAVAL STATION - NORFOLK, VA
GROTON, CONNECTICUT
P-1102 WEAPONS MAGAZINE & ORDNANCE OPERATIONS FACILITY
CLWS MAGAZINE

SECURITY PILASTER DETAILS

SCALE:	NONE
EPROJECT NO.:	1667770
CONSTR. CONTR. NO.	
NAVFAC DRAWING NO.	12894276
SHEET	33 OF 77

S-505

FILE NAME: C:\pw_work\dir\jdm0031\ch2mhill_09050107\d1495963\S-505.dwg LAYOUT NAME: S-505 PLOTTED: Friday, June 13, 2025 - 9:19am USER: 09050107

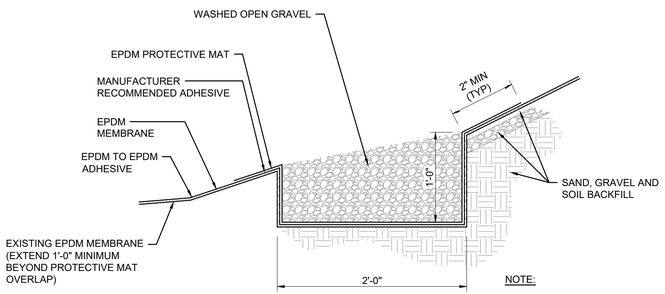

NOTE:

1. SIMILAR DETAIL BETWEEN MAGAZINES.

C1 EDGE DITCH DETAIL
NOT TO SCALE

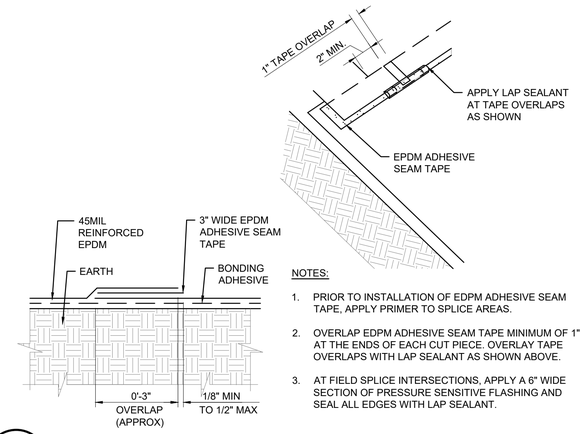

NOTES:

1. PRIOR TO INSTALLATION OF EDPM ADHESIVE SEAM TAPE, APPLY PRIMER TO SPLICE AREAS.
2. OVERLAP EDPM ADHESIVE SEAM TAPE MINIMUM OF 1" AT THE ENDS OF EACH CUT PIECE. OVERLAY TAPE OVERLAPS WITH LAP SEALANT AS SHOWN ABOVE.
3. AT FIELD SPLICE INTERSECTIONS, APPLY A 6" WIDE SECTION OF PRESSURE SENSITIVE FLASHING AND SEAL ALL EDGES WITH LAP SEALANT.

C2 EPDM SEAM DETAIL
NOT TO SCALE

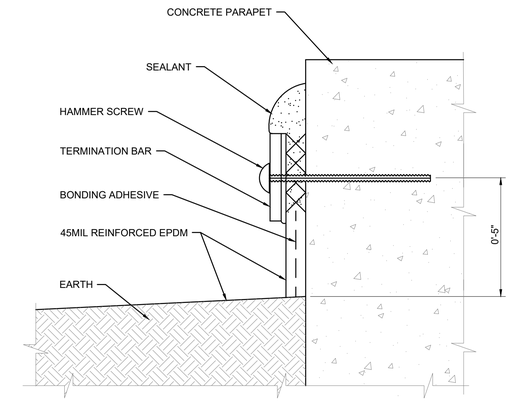

C4 ROOF DETAIL
NOT TO SCALE

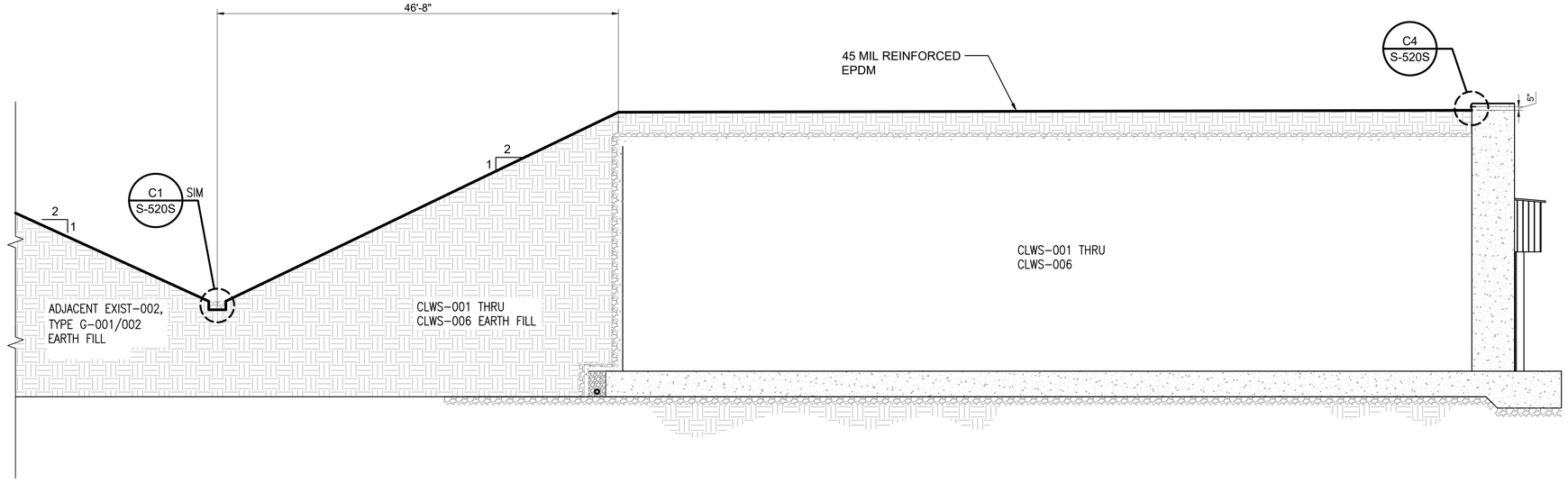

A1 ROOF SECTION
SCALE: 1/8" = 1'-0"

SYM	DESCRIPTION	DATE	APPR.

NAVFAC

SEAL: LAURA ARICO PRESLEY, REGISTERED ENGINEER, AGRICULTURE, COMMERCE, No. 106382, STATE OF TENNESSEE, 06/27/2025

Jacobs
1100 NORTH GLEBE ROAD
SUITE 500
ARLINGTON, VIRGINIA 22201
571.218.1000
FAX: 571.218.1600

A/E INFO

APPROVED: FOR COMMANDER NAVFAC 8/14/2025

ACTIVITY: APPROVED BY LCDR ELIZABETH OLOKODE NAVFAC NLON FEAD DIRECTOR NEW LONDON, GROTON, CT

SATISFACTORY TO DATE 05/27/2025

DES	SB	DRW	JC	CHK	LAP

PM/DM	SMS/CWJ
BRANCH MANAGER	NEK
CHIEF ENG/ARCH	EJA
FIRE PROTECTION	HPN

DEPARTMENT OF THE NAVY
NAVAL FACILITIES ENGINEERING SYSTEMS COMMAND - MID-ATLANTIC
MID-ATLANTIC
NAVAL FACILITIES ENGINEERING SYSTEMS COMMAND
NAVAL STATION - NORFOLK, VA
NAVAL SUBMARINE BASE NEW LONDON
GROTON, CONNECTICUT
P-1102 WEAPONS MAGAZINE & ORDINANCE OPERATIONS FACILITY
CLWS MAGAZINE

EPDM COVER DETAILS - SITE ADAPTED

SCALE:	NONE
EPROJECT NO.:	1667770
CONSTR. CONTR. NO.	
NAVFAC DRAWING NO.	12894277
SHEET	34 OF 77

S-520S

FILE NAME: C:\pw_work\dms\dms0033\ch2mhill_09050107\d1495963\S-520S.dwg LAYOUT NAME: S-520S PLOTTED: Friday, June 13, 2025 - 9:19am USER: 09050107

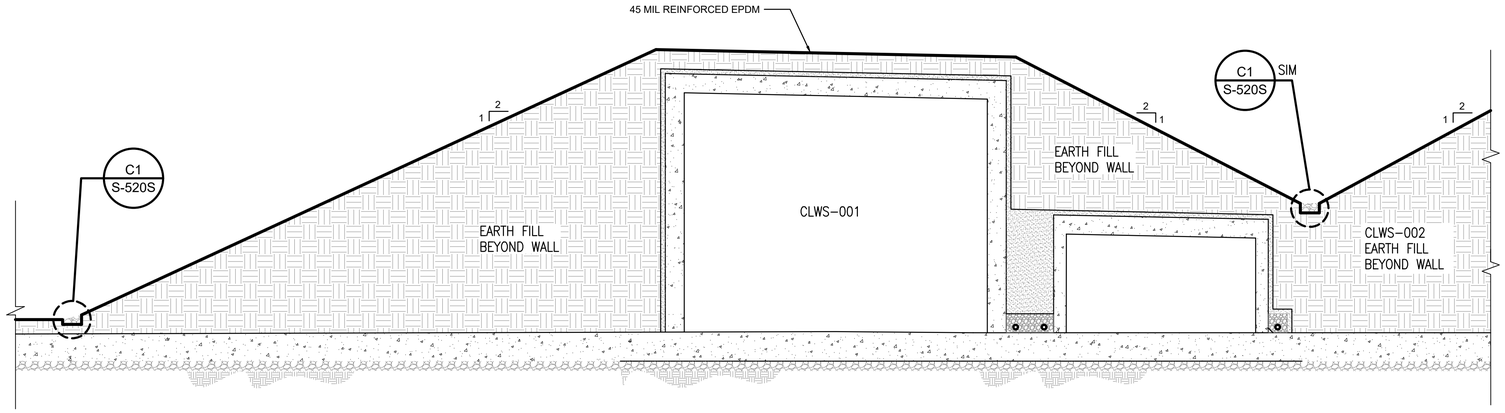

C1 ROOF SECTION
SCALE: 1/8" = 1'-0"

0 4' 8' 16'

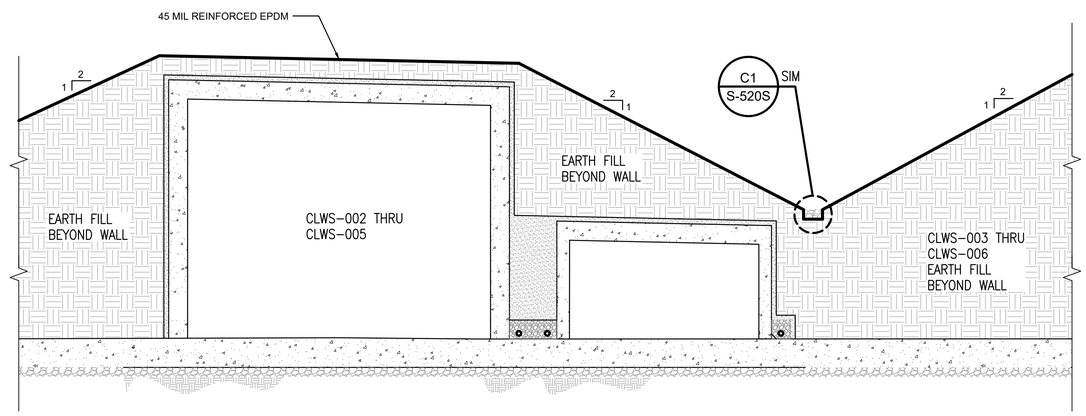

B1 ROOF SECTION
SCALE: 1/8" = 1'-0"

0 4' 8' 16'

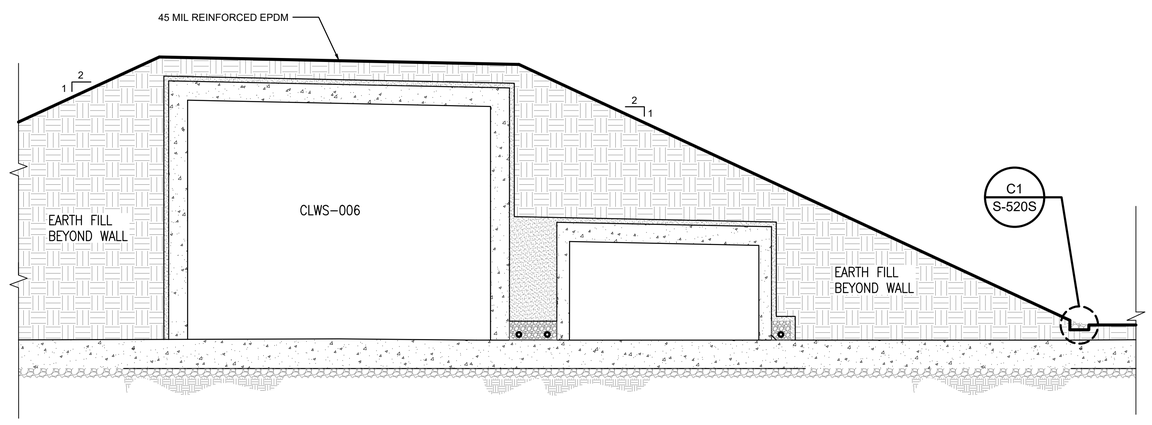

A1 ROOF SECTION
SCALE: 1/8" = 1'-0"

0 4' 8' 16'

SYM	DESCRIPTION	DATE	APPR.

NAVFAC

SEAL

Jacobs
1100 NORTH GLEBE ROAD
SUITE 500
ARLINGTON, VIRGINIA 22201
571.218.1000
FAX: 571.218.1600

A/E INFO

APPROVED
FOR COMMANDER NAVFAC 8/14/2025

ACTIVITY
APPROVED BY LCDR ELIZABETH OLOKODE NAVFAC NLON FEAD DIRECTOR NEW LONDON, GROTON, CT

SATISFACTORY TO DATE 05/27/2025

DES	SB	DRW	JC	CHK	LAP

PM/DM SMS/CWJ
BRANCH MANAGER NEK
CHIEF ENG/ARCH EJA
FIRE PROTECTION HPN

DEPARTMENT OF THE NAVY
NAVAL FACILITIES ENGINEERING SYSTEMS COMMAND
MID-ATLANTIC
NAVAL SUBMARINE BASE NEW LONDON
NAVAL FACILITIES ENGINEERING SYSTEMS COMMAND - MID-ATLANTIC
NAVAL STATION - NORFOLK, VA
GROTON, CONNECTICUT
P-1102 WEAPONS MAGAZINE & ORDINANCE OPERATIONS FACILITY
CLWS MAGAZINE

EPDM COVER SECTIONS - SITE ADAPTED

SCALE: NONE
EPROJECT NO.: 1667770
CONSTR. CONTR. NO.
NAVFAC DRAWING NO. 12894278
SHEET 35 OF 77

S-521S

FILE NAME: C:\pw_workdir\dms0033\ch2mhill_09050107\d1495963\S-521S.dwg LAYOUT NAME: S-521S PLOTTED: Friday, June 13, 2025 - 9:20am USER: 09050107

DOOR SCHEDULE										
DOOR TYPE	SIZE			MATERIAL	FINISH	SIZE			HARDWARE	U_VALUE
	HEIGHT	WIDTH	THICKNESS			HEAD	JAMB	SILL		
B	15'-11" INT. 15'-9 1/4" EXT.	37'-0"	0'-9"	STEEL	PAINT				2	PER FACILITY DESIGN STANDARD
A	6'-8"	6'-0"	0'-1 3/4"	INSULATED HOLLOW METAL	PAINT				1	

NOTE: TYPE A DOOR SHALL BE A DOUBLE EGRESS DOOR - RHR (RIGHT HAND REVERSE).

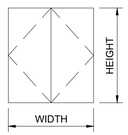

TYPE 'A'

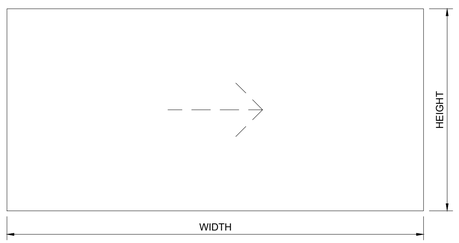

TYPE 'B': SLIDING BLAST DOOR FOR OPENING SEE SHEET S-201AS S201BS, AND S-201CS

C1 DOOR LEGEND
SCALE: NONE

THESE DRAWINGS ARE AN EXACT REPLICA OF THE STANDARD MAGAZINE TYPE "CLWS" PROVIDED BY NAVFAC. THE DESIGN WILL BE SITE ADAPTED AND MODIFIED TO MEET THE SPECIFIC GEOTECHNICAL AND LOADING CONDITIONS SPECIFIC TO NAVAL SUBMARINE BASE NEW LONDON, GROTON, CONNECTICUT.

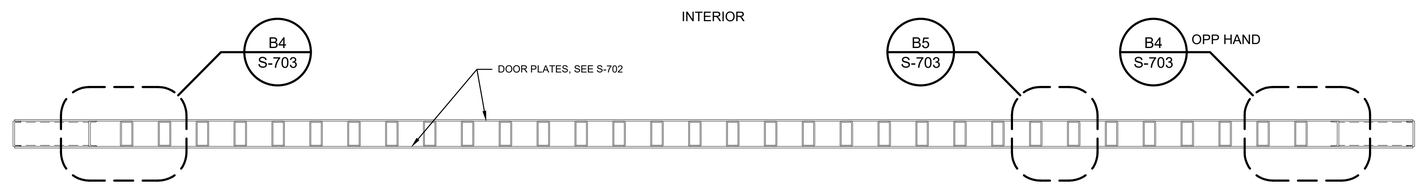

C2 DOOR FRAMING SECTION
SCALE: 1/2" = 1'-0"

HW SET #1	
DOOR: TYPE A	
QTY	HARDWARE
6	HINGE (A5111) FULL MORTISE W/ MODIFIED NON-REMOVABLE PIN
2	EXIT DEVICE (FF-L-2890B)
1	CYLINDER W/ EXTERNAL LEVER COMPATIBLE W/ EXIT DEVICE
1	ELECTRIC STRIKE (E09391)
1	ELECTRIC STRIKE (E09391)
2	KICK PLATE (J102)
2	OVERHEAD STOP (C01541)
1	REMOVABLE ASTRAGAL
1	THRESHOLD (J35100)
1	HEAD GASKET (R0Y164)
1	JAMB GASKET (R0Y164)
1	RAIN DRIP (R0Y976)
1	SWEEP (R0Y416)
1	BALANCE MAGNETIC SWITCH (UL 634 HSS)
1	INTERNAL LOCKING DEVICE (ILD)
1	INTRUSION DETECTION SYSTEM (IDS)

HW SET #2	
DOOR: TYPE B	
QTY	HARDWARE
1	INTERNAL LOCKING DEVICE (ILD)
1	INTRUSION DETECTION SYSTEM (IDS)
1	SWITCH (UL 634 HSS)
REFER TO DETAILS FOR SPECIFIC GASKETING AND FABRICATED ELEMENTS.	

GENERAL NOTES:

1. ALL FINISHES, BHMA 630; 626.
2. LOCKSETS AND LATCHES MUST COMPLY WITH (ANSI/ BHMA A156.13, SERIES 1000, OPERATIONAL GRADE 1, SECURITY GRADE (L) (2) (AND) (ANSI/ BHMA A156.2, SERIES 4000, GRADE L).
3. COORDINATE ALL HARDWARE SECURITY REQUIREMENTS WITH THE SERVICE AND INSTALLATION SECURITY PERSONNEL.
4. ALL HIGH SECURITY PADLOCKS ARE GFCI.

A1 DOOR HARDWARE SCHEDULE
SCALE: NONE

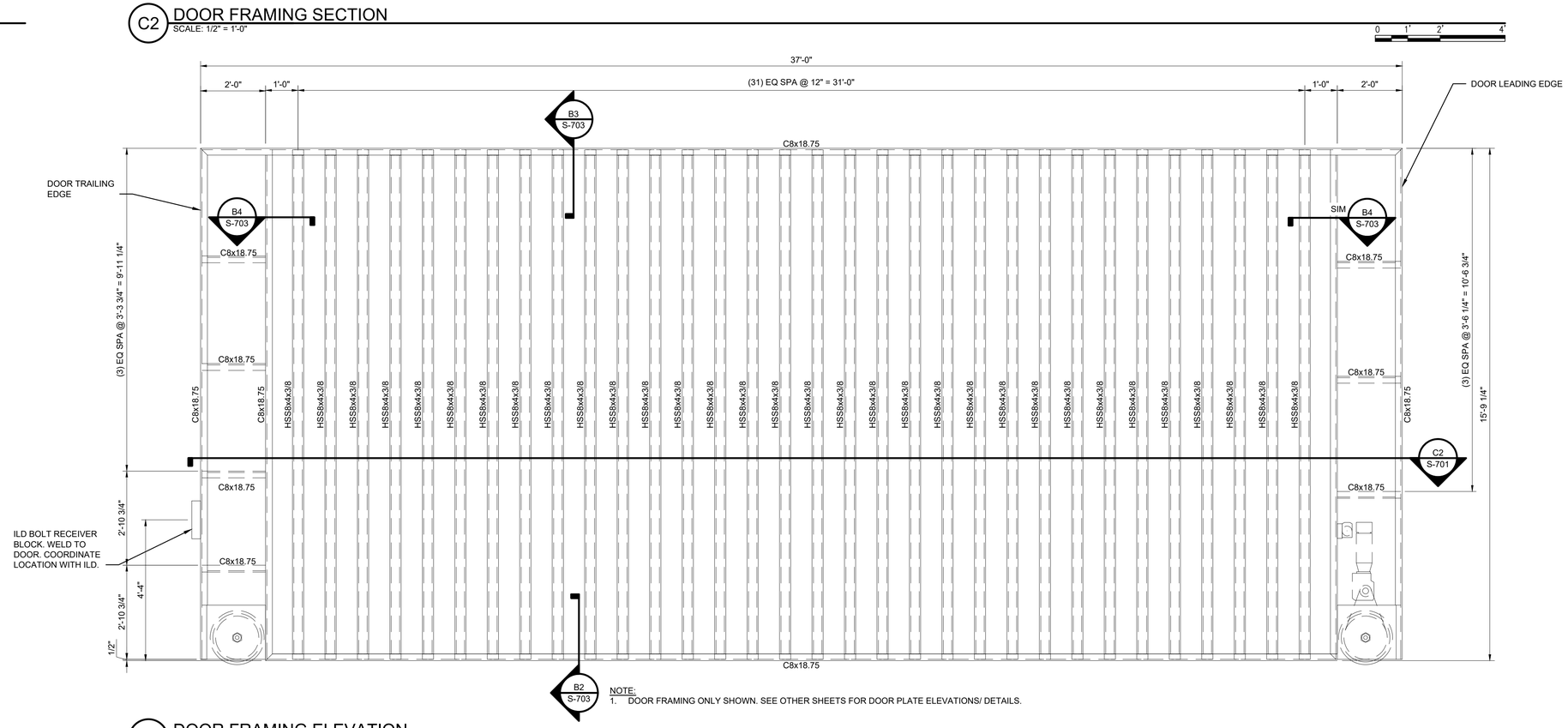

NOTE:
1. DOOR FRAMING ONLY SHOWN. SEE OTHER SHEETS FOR DOOR PLATE ELEVATIONS/ DETAILS.

A2 DOOR FRAMING ELEVATION
SCALE: 1/2" = 1'-0"

ORIGINAL STANDARD DRAWING IS NAVFAC DRAWING NUMBER 12877636 SHT 27 OF 51

SYM	DESCRIPTION	DATE	APPR.

NAVFAC

SEAL

Jacobs
1100 NORTH GLEBE ROAD
SUITE 500
ARLINGTON, VIRGINIA 22201
571.218.1000
FAX: 571.218.1600

A/E INFO

APPROVED
FOR COMMANDER NAVFAC 8/14/2025

ACTIVITY
APPROVED BY LCDR ELIZABETH OLOKODE NAVFAC NLON FEAD DIRECTOR NEW LONDON, GROTON, CT

SATISFACTORY TO DATE 05/27/2025

DES	JAF	DRW	SFF	CHK	TPH
PM/DM	SMS/CWJ				
BRANCH MANAGER	NEK				
CHIEF ENG/ARCH	JWJ				
FIRE PROTECTION	HPN				

DEPARTMENT OF THE NAVY
NAVAL FACILITIES ENGINEERING SYSTEMS COMMAND
MID-ATLANTIC
NAVAL FACILITIES ENGINEERING SYSTEMS COMMAND - MID-ATLANTIC
NAVAL STATION - NORFOLK, VA
NAVAL SUBMARINE BASE NEW LONDON
GROTON, CONNECTICUT
P-1102 WEAPONS MAGAZINE & ORDNANCE OPERATIONS FACILITY
CLWS MAGAZINE
DOOR ELEVATION, NOTES AND SCHEDULES

SCALE: NONE
EPROJECT NO.: 1667770
CONSTR. CONTR. NO.
NAVFAC DRAWING NO. 12894279
SHEET 36 OF 77
S-701

FILE NAME: C:\pw_work\dr\jacd03\jc2mhill_09050107\d1495963\S-701.dwg LAYOUT NAME: S-701 PLOTTED: Friday, June 13, 2025 - 9:20am USER: 09050107

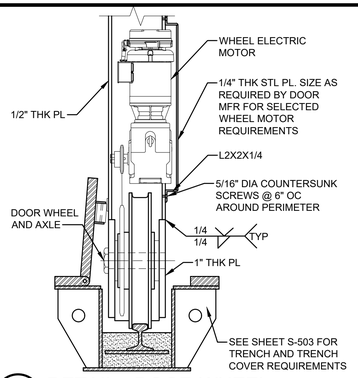

D1 DETAIL - DOOR WHEEL
SCALE: 1" = 1'-0"

DESIGN/MANUFACTURING NOTES:

1. MOTOR INSTALLATION SHOWN IS NOTIONAL AND IS FOR BIDDING PURPOSES AND MAY VARY BASED ON DOOR MANUFACTURER'S APPROVED DESIGN.
2. DOOR MANUFACTURER'S DESIGN MUST ALLOW FOR MAINTENANCE OF THE MOTOR ASSEMBLY AND ITS COMPONENTS, INCLUDING REMOVAL OF AND REPLACEMENT OF THE MOTOR ASSEMBLY.
3. USE STANDARD PARTS AS MUCH AS POSSIBLE.
4. ACCESS TO THE MOTOR ASSEMBLY IS NOT NECESSARILY LIMITED TO ONE SIDE OF THE DOOR. IF ACCESS TO BOTH SIDES OF THE DOOR IS USED, IT MUST BE SHOWN THAT THE WHEEL LOAD PATH THROUGH THE SUPPORTING PLATES IS ADEQUATE.
5. A MOTOR ASSEMBLY MOUNTED INTERNAL TO THE DOOR IS PREFERRED; HOWEVER, A MOTOR ASSEMBLY MOUNTED ON THE EXTERIOR OF THE DOOR MAY BE ACCEPTABLE IF APPROVED.
6. SEE DETAIL C3 ON SHEET S-504 FOR ALTERNATIVE DOOR DRIVE ARRANGEMENT

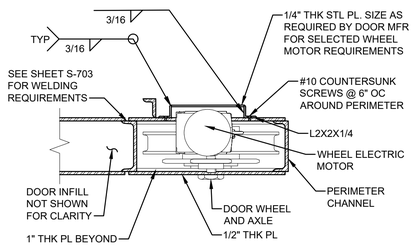

C1 DETAIL - DOOR WHEEL AND WHEEL MOTOR
SCALE: 1" = 1'-0"

THESE DRAWINGS ARE AN EXACT REPLICA OF THE STANDARD MAGAZINE TYPE "CLWS" PROVIDED BY NAVFAC. THE DESIGN WILL BE SITE ADAPTED AND MODIFIED TO MEET THE SPECIFIC GEOTECHNICAL AND LOADING CONDITIONS SPECIFIC TO NAVAL SUBMARINE BASE NEW LONDON, GROTON, CONNECTICUT.

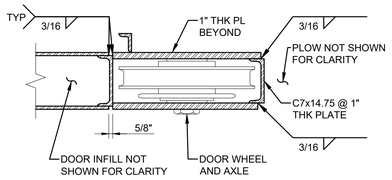

B1 DETAIL - DOOR WHEEL
SCALE: 1" = 1'-0"

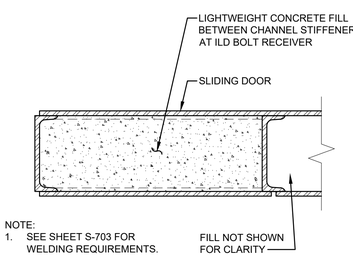

NOTE:
1. SEE SHEET S-703 FOR WELDING REQUIREMENTS.

A1 DETAIL - ILD BOLT RECEIVER DOOR FILL
SCALE: 1 1/2" = 1'-0"

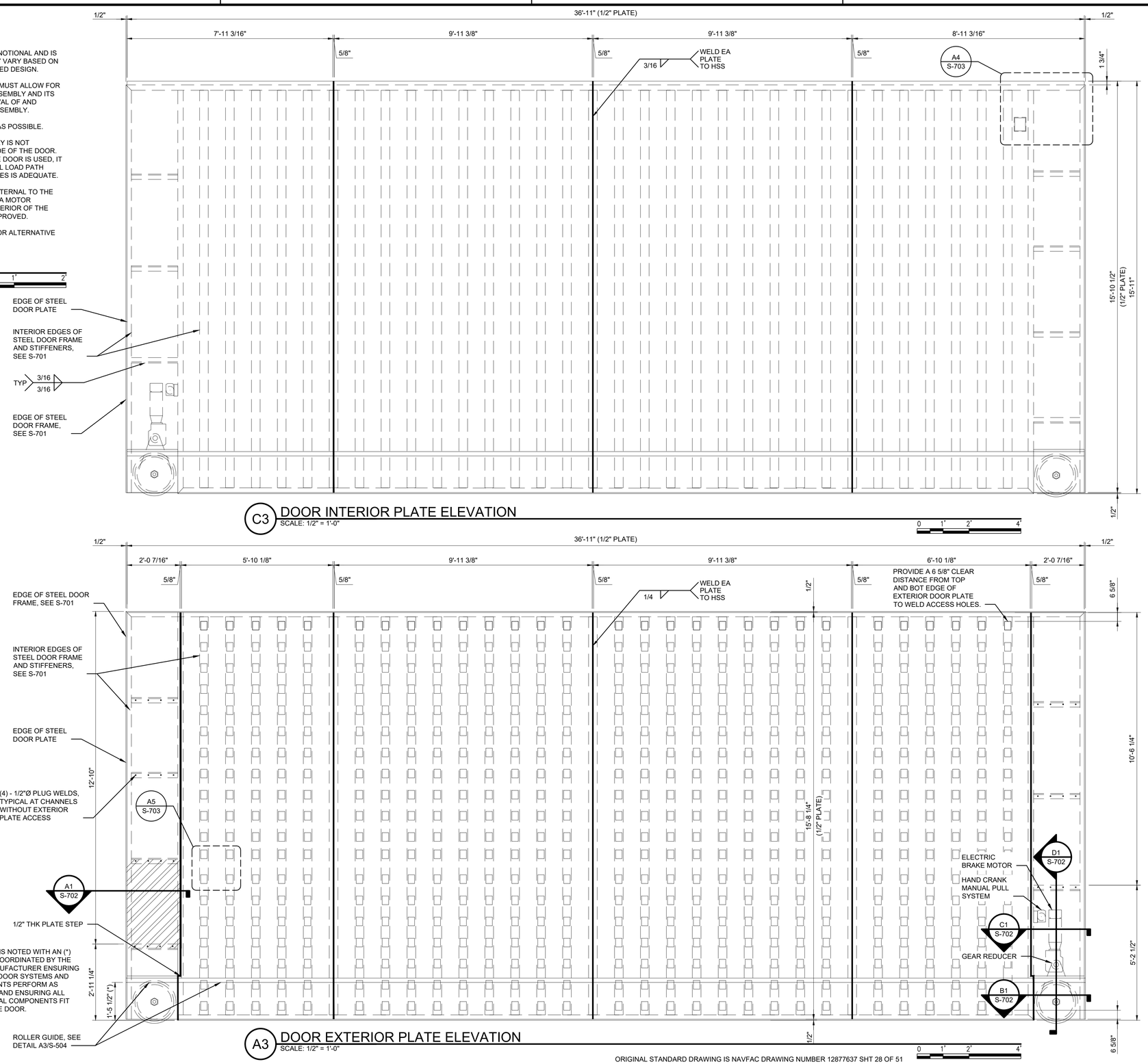

C3 DOOR INTERIOR PLATE ELEVATION
SCALE: 1/2" = 1'-0"

NOTE:
1. DIMENSIONS NOTED WITH AN (*) MUST BE COORDINATED BY THE DOOR MANUFACTURER ENSURING THAT THE DOOR SYSTEMS AND COMPONENTS PERFORM AS INTENDED AND ENSURING ALL MECHANICAL COMPONENTS FIT WITHIN THE DOOR.

A3 DOOR EXTERIOR PLATE ELEVATION
SCALE: 1/2" = 1'-0"

ORIGINAL STANDARD DRAWING IS NAVFAC DRAWING NUMBER 12877637 SHT 28 OF 51

SYM	DESCRIPTION	DATE	APPR

NAVFAC

Jacobs
1100 NORTH GLEBE ROAD
SUITE 500
ARLINGTON, VIRGINIA 22201
571.218.1000
FAX: 571.218.1600

A/E INFO

APPROVED
FOR COMMANDER NAVFAC
ACTIVITY
APPROVED BY LCDR ELIZABETH OLOKODE NAVFAC NLON FEAD DIRECTOR NEW LONDON, GROTON, CT
SATISFACTORY TO DATE 05/27/2025

DES	JAF	DRW	SFF	CHK	TPH
PM/DM	SMS/CWJ				
BRANCH MANAGER	NEK				
CHIEF ENG/ARCH	JWJ				
FIRE PROTECTION	HPN				

DEPARTMENT OF THE NAVY
NAVAL FACILITIES ENGINEERING SYSTEMS COMMAND
MID-ATLANTIC
NAVAL FACILITIES ENGINEERING SYSTEMS COMMAND - MID-ATLANTIC
NAVAL STATION - NORFOLK, VA
NAVAL SUBMARINE BASE NEW LONDON
GROTON, CONNECTICUT
P-1102 WEAPONS MAGAZINE & ORDNANCE OPERATIONS FACILITY
CLWS MAGAZINE
DOOR ELEVATION AND DETAILS

SCALE: NONE
EPROJECT NO.: 1667770
CONSTR. CONTR. NO.
NAVFAC DRAWING NO. 12894280
SHEET 37 OF 77
S-702

FILE NAME: C:\pw_work\dir\jdev003\ch2mhill_09050107\d1495963\S-702.dwg LAYOUT NAME: S-702 PLOTTED: Friday, June 13, 2025 - 9:20am USER: 09050107

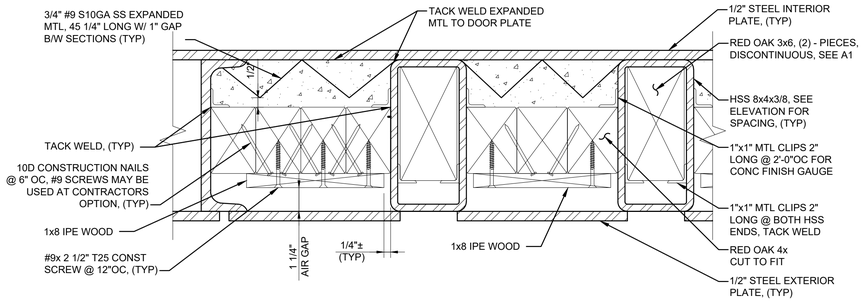

C1 DOOR STIFFENER AND INFILL LAYOUT - TOP/ BOTTOM DOOR SECTIONS

SCALE: 3" = 1'-0"

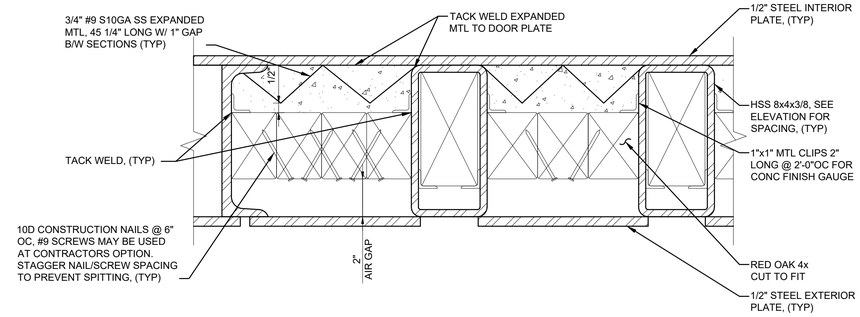

C3 DOOR STIFFENER AND FILL LAYOUT - MIDDLE DOOR SECTION

SCALE: 3" = 1'-0"

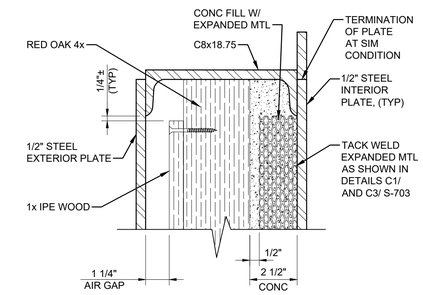

C5 DOOR TOP LAYOUT

SCALE: 3" = 1'-0"

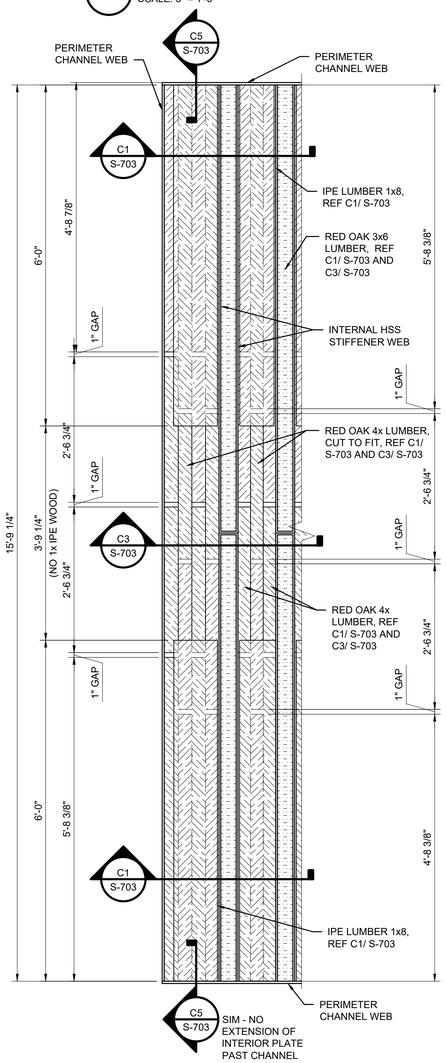

A1 ELEVATION - TYPICAL CONFIGURATION OF DOOR INFILL

SCALE: 3/4" = 1'-0"

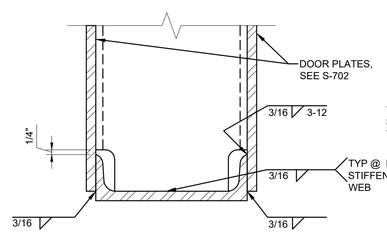

NOTE: DOOR INFILL NOT SHOWN FOR CLARITY.

B2 DETAIL AT BOTTOM OF DOOR

SCALE: 3" = 1'-0"

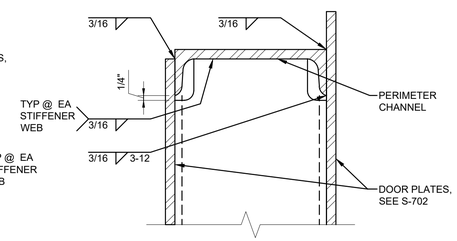

NOTE: DOOR INFILL NOT SHOWN FOR CLARITY.

B3 DETAIL AT TOP OF DOOR

SCALE: 3" = 1'-0"

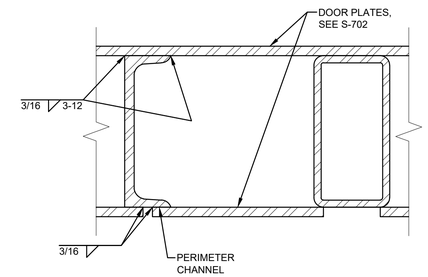

NOTE: DOOR INFILL NOT SHOWN FOR CLARITY

B4 WELD DETAIL AT DOOR EDGE

SCALE: 3" = 1'-0"

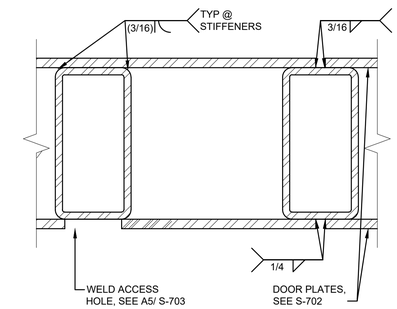

NOTE: DOOR INFILL NOT SHOWN FOR CLARITY

B5 WELD DETAIL AT INTERIOR STIFFENERS

SCALE: 3" = 1'-0"

THESE DRAWINGS ARE AN EXACT REPLICA OF THE STANDARD MAGAZINE TYPE "CLWS" PROVIDED BY NAVFAC. THE DESIGN WILL BE SITE ADAPTED AND MODIFIED TO MEET THE SPECIFIC GEOTECHNICAL AND LOADING CONDITIONS SPECIFIC TO NAVAL SUBMARINE BASE NEW LONDON, GROTON, CONNECTICUT.

SHEET NOTES:

1. CONCRETE FILLED DOORS REQUIRE WHEELS OFFSET NOMINAL TOWARD THE INTERIOR SIDE OF THE DOOR. DOOR MANUFACTURER MUST VERIFY CENTER OF GRAVITY OF DOOR PRIOR TO FINAL CONSTRUCTION.
2. EXPANDED METAL REINFORCEMENT SHOWN IN THE CONCRETE FILL LAYER INSIDE THE DOOR IN DETAILS C1 AND C3 OF THIS SHEET MUST BE PLACED IN (4) DIFFERENT PIECES OF METAL WITH EQUAL LENGTHS AND PLACED IN THE CONCRETE FILL TO BE DISCONTINUOUS WITHOUT ATTACHING OR LAPPING THE DIFFERENT SEGMENTS TOGETHER. PROVIDE 1" GAP BETWEEN ADJACENT SECTIONS OF EXPANDED METAL REINFORCEMENT, AS INDICATED IN THE DETAILS.

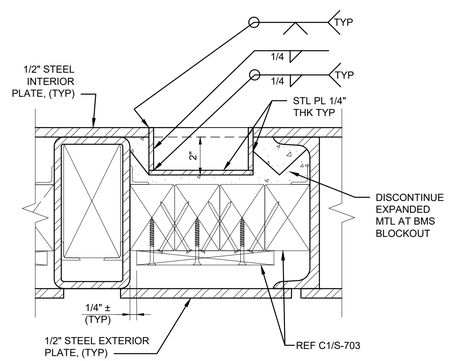

A3 BMS BLOCKOUT DETAIL

SCALE: 3" = 1'-0"

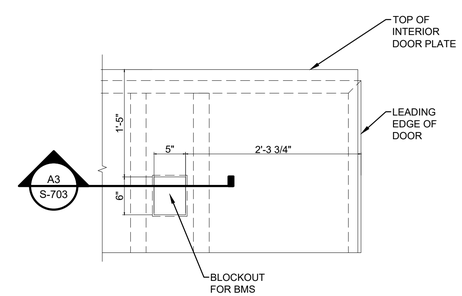

A4 BMS BLOCKOUT LOCATION

SCALE: 1" = 1'-0"

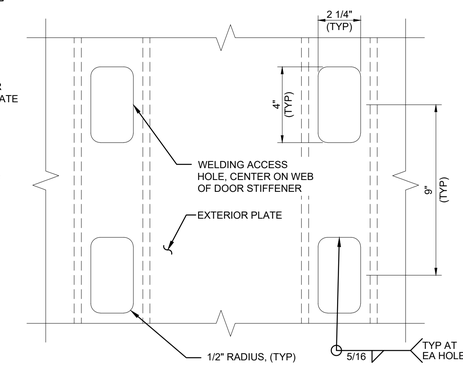

A5 EXTERIOR PLATE TO HSS STIFFENER CONNECTION

SCALE: 3" = 1'-0"

ORIGINAL STANDARD DRAWING IS NAVFAC DRAWING NUMBER 12877638 SHT 29 OF 51

SYM	DESCRIPTION	DATE	APPR

NAVFAC

SEAL

Jacobs
1100 NORTH GLEBE ROAD
SUITE 500
ARLINGTON, VIRGINIA 22201
571.218.1000
FAX: 571.218.1600

A/E INFO

APPROVED
FOR COMMANDER NAVFAC 8/14/2025

ACTIVITY
APPROVED BY LCDR ELIZABETH OLOKODE NAVFAC NLON FEAD DIRECTOR NEW LONDON, GROTON, CT

SATISFACTORY TO DATE 05/27/2025

DES	JAF	DRW	SFF	CHK	TPH
PM/DM	SMS/CWJ				
BRANCH MANAGER	NEK				
CHIEF ENG/ARCH	JWJ				
FIRE PROTECTION	HPN				

DEPARTMENT OF THE NAVY
NAVAL FACILITIES ENGINEERING SYSTEMS COMMAND
MID-ATLANTIC
NAVAL FACILITIES ENGINEERING SYSTEMS COMMAND - MID-ATLANTIC
NAVAL STATION - NORFOLK, VA
NAVAL SUBMARINE BASE NEW LONDON
GROTON, CONNECTICUT
P-1102 WEAPONS MAGAZINE & ORDNANCE OPERATIONS FACILITY
CLWS MAGAZINE

DOOR DETAILS

SCALE: NONE
EPROJECT NO.: 1667770
CONSTR. CONTR. NO.
NAVFAC DRAWING NO. 12894281
SHEET 38 OF 77

S-703

FILE NAME: C:\pw_work\pw003\pb2mhil_09050107\d1495963\S-703.dwg LAYOUT NAME: S-703 PLOTTED: Friday, June 13, 2025 - 9:20am USER: 09050107

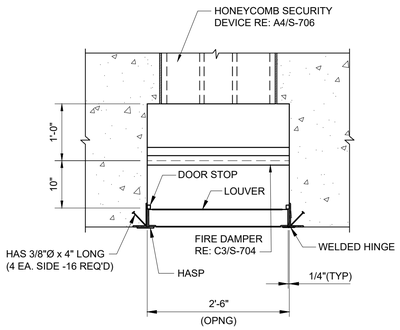

C2 SECTION
SCALE: 3/4" = 1'-0"

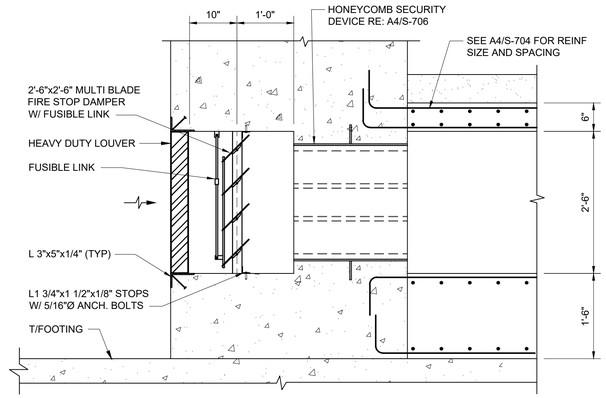

C3 SECTION
SCALE: 3/4" = 1'-0"

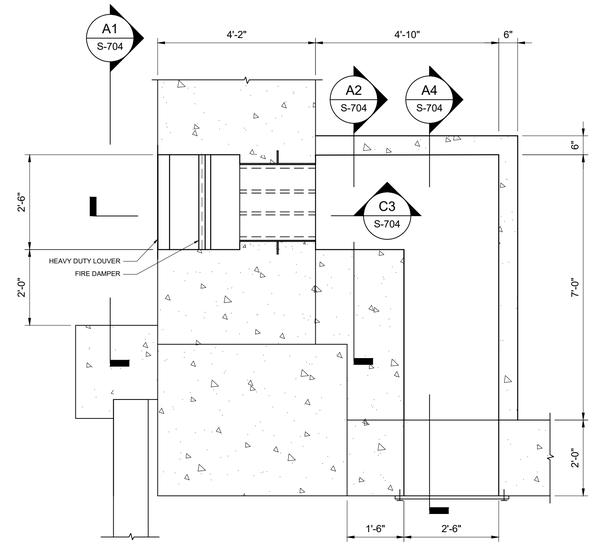

C5 AIR INTAKE DETAIL
SCALE: 1/2" = 1'-0"

THESE DRAWINGS ARE AN EXACT REPLICA OF THE STANDARD MAGAZINE TYPE "CLWS" PROVIDED BY NAVFAC. THE DESIGN WILL BE SITE ADAPTED AND MODIFIED TO MEET THE SPECIFIC GEOTECHNICAL AND LOADING CONDITIONS SPECIFIC TO NAVAL SUBMARINE BASE NEW LONDON, GROTON, CONNECTICUT.

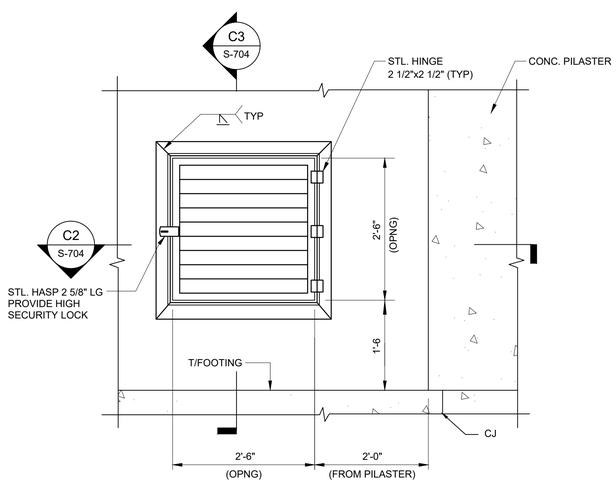

A1 SECTION
SCALE: 3/4" = 1'-0"

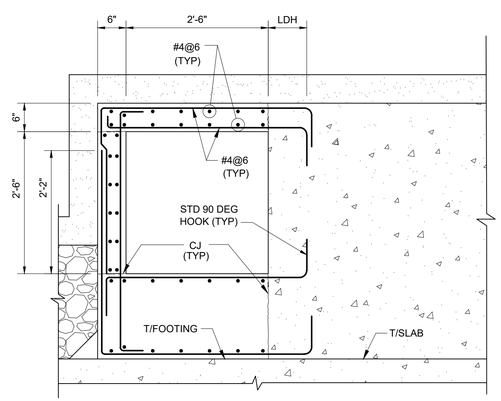

A2 SECTION
SCALE: 3/4" = 1'-0"

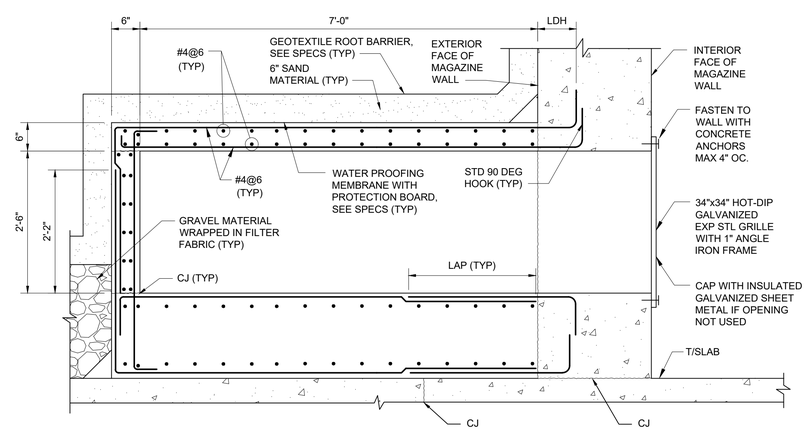

A4 SECTION
SCALE: 3/4" = 1'-0"

ORIGINAL STANDARD DRAWING IS NAVFAC DRAWING NUMBER 12877639 SHT 30 OF 51

SYM	DESCRIPTION	DATE	APPR.

SEAL

Jacobs
1100 NORTH GLEBE ROAD
SUITE 500
ARLINGTON, VIRGINIA 22201
571.218.1000
FAX: 571.218.1600

A/E INFO

APPROVED
FOR COMMANDER NAVFAC

ACTIVITY
APPROVED BY LCDR ELIZABETH OLOKODE NAVFAC NLON FEAD DIRECTOR NEW LONDON, GROTON, CT
SATISFACTORY TO DATE: 05/27/2025

DES	JAF	DRW	SFF	CHK	TPH
PM/DM	SMS/CWJ				
BRANCH MANAGER	NEK				
CHIEF ENG/ARCH	JWJ				
FIRE PROTECTION	HPN				

DEPARTMENT OF THE NAVY
NAVAL FACILITIES ENGINEERING SYSTEMS COMMAND
MID-ATLANTIC
NAVAL FACILITIES ENGINEERING SYSTEMS COMMAND - MID-ATLANTIC
NAVAL STATION - NORFOLK, VA
NAVAL SUBMARINE BASE NEW LONDON
GROTON, CONNECTICUT
P-1102 WEAPONS MAGAZINE & ORDNANCE OPERATIONS FACILITY
CLWS MAGAZINE
AIR INTAKE SECTIONS AND DETAILS

SCALE: NONE
EPROJECT NO.: 1667770
CONSTR. CONTR. NO.
NAVFAC DRAWING NO. 12894282
SHEET 39 OF 77
S-704

FILE NAME: C:\pw_workdir\dms0033\ch2mhill_09050107\d1495963\S-704.dwg LAYOUT NAME: S-704 PLOTTED: Friday, June 13, 2025 - 9:21am USER: 09050107

THESE DRAWINGS ARE AN EXACT REPLICA OF THE STANDARD MAGAZINE TYPE "CLWS" PROVIDED BY NAVFAC. THE DESIGN WILL BE SITE ADAPTED AND MODIFIED TO MEET THE SPECIFIC GEOTECHNICAL AND LOADING CONDITIONS SPECIFIC TO NAVAL SUBMARINE BASE NEW LONDON, GROTON, CONNECTICUT.

NOTES:
1. PROVIDE SCREENED DAMPER COMPONENTS.
2. ALL DAMPER AND SHAFT ASSEMBLIES MUST OPERATE FREELY AND POSITIVELY.
3. FUSIBLE LINKS MUST HAVE MELTING POINT OF 160° TO 165° F. BREAKING STRENGTH MUST BE SUITABLE FOR LOADS IMPOSED BY COUNTERWEIGHTS.
4. ALL SET SCREWS & MACHINE SCREWS MUST BE STAINLESS STEEL.
5. VENTILATOR MUST BE DESIGNED FOR A SUSTAINED WIND SPEED OF 132 M.P.H.
6. REFER TO ELECTRICAL DRAWINGS FOR LIGHTNING ROD LOCATION ON VENTILATOR.
7. ALL MOVING PARTS MUST BE NON-SPARKING TYPE.
8. GRAVITY VENTILATOR MUST BE INTRINSICALLY SAFE.
9. BOND VENTILATOR TO GROUNDING SYSTEM. SEE ELECTRICAL DRAWINGS REQUIREMENTS.
10. CAP TOP OF SHAFT WITH GALVANIZED SHEET METAL WITH 2" RIGID BOARD INSULATION IN LIEU OF PROVIDING VENTILATOR WHERE A MECHANICAL HEATING AND /OR COOLING SYSTEM IS REQUIRED.
11. ALL COMPONENTS ON THIS SHEET INDICATED TO BE "SS" MUST BE TYPE 304 (NON-PASSIVATED) STAINLESS STEEL.

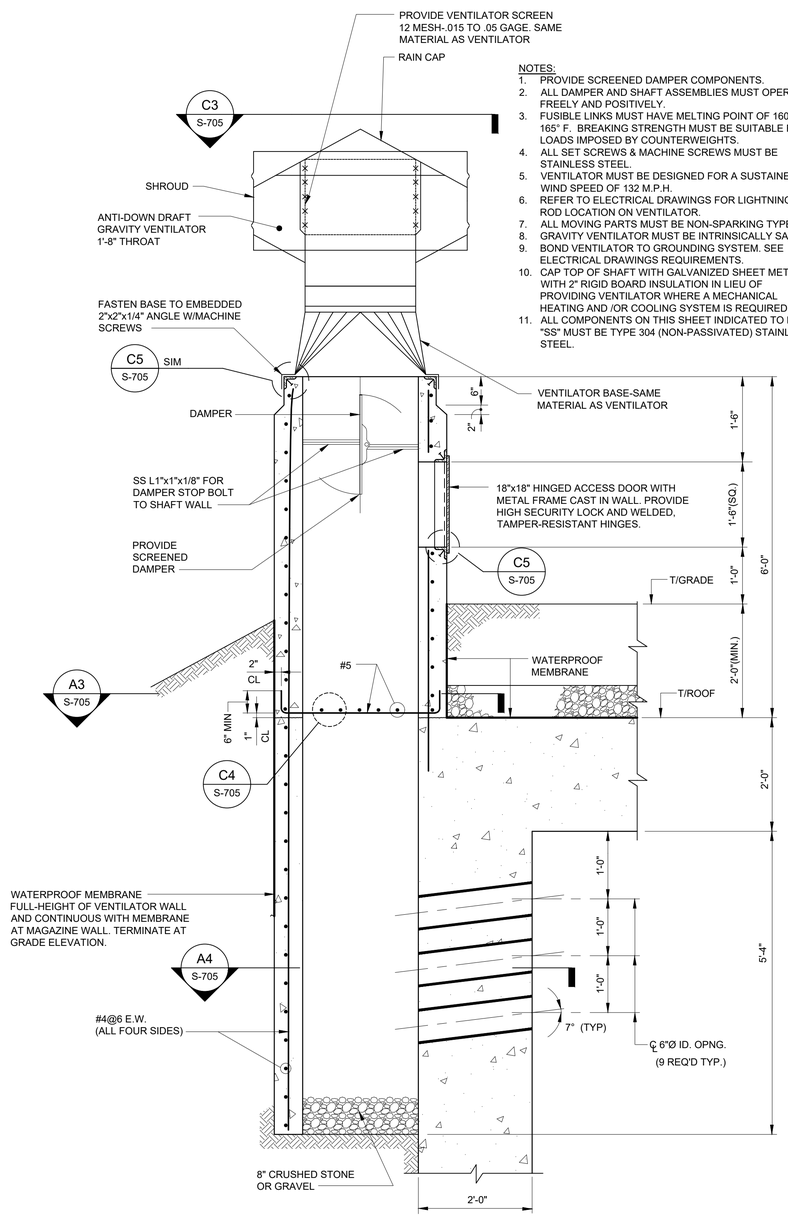

A1 SECTION
SCALE: 3/4" = 1'-0"

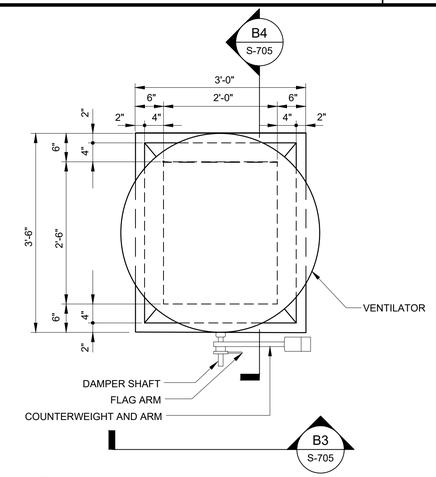

C3 DETAIL
SCALE: 3/4" = 1'-0"

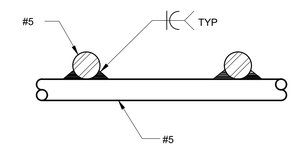

C4 DETAIL
SCALE: 3" = 1'-0"

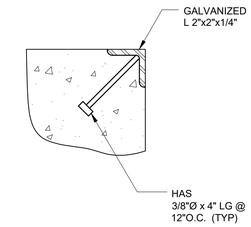

C5 DETAIL
SCALE: 3" = 1'-0"

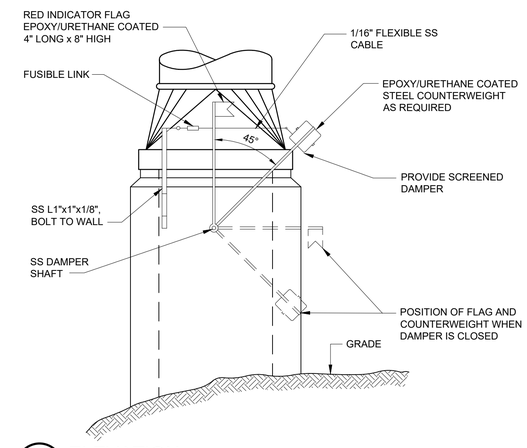

B3 ELEVATION
SCALE: 3/4" = 1'-0"

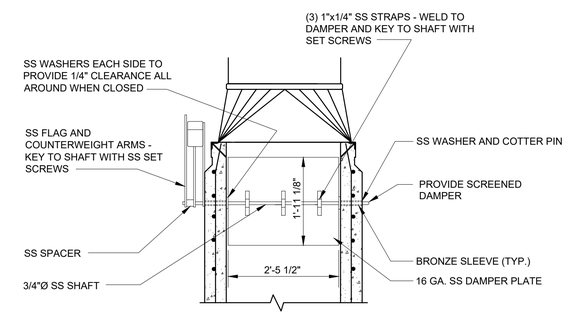

B4 SECTION
SCALE: 3/4" = 1'-0"

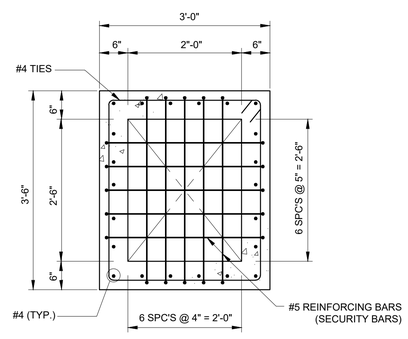

A3 SECTION
SCALE: 3/4" = 1'-0"

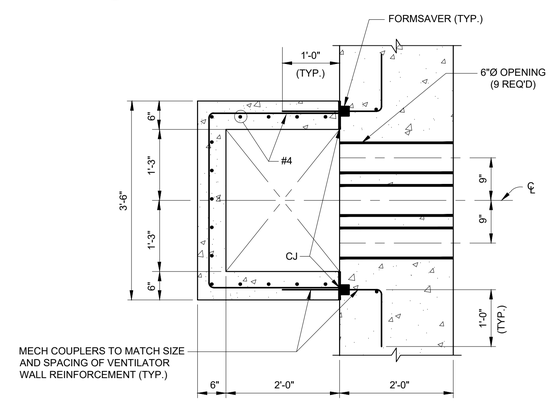

A4 SECTION
SCALE: 3/4" = 1'-0"

ORIGINAL STANDARD DRAWING IS NAVFAC DRAWING NUMBER 12877640 SHT 31 OF 51

SYM	DESCRIPTION	DATE	APPR.

NAVFAC

Jacobs
1100 NORTH GLEBE ROAD
SUITE 500
ARLINGTON, VIRGINIA 22201
571.218.1000
FAX: 571.218.1600

A/E INFO

APPROVED
FOR COMMANDER NAVFAC 8/14/2025

ACTIVITY
APPROVED BY LCDR ELIZABETH OLOKODE NAVFAC NLON FEAD DIRECTOR NEW LONDON, GROTON, CT

SATISFACTORY TO DATE 05/27/2025

DES	JAF	DRW	SFF	CHK	TPH
PM/DM	SMS/CWJ				
BRANCH MANAGER	NEK				
CHIEF ENG/ARCH	JWJ				
FIRE PROTECTION	HPN				

DEPARTMENT OF THE NAVY
NAVAL FACILITIES ENGINEERING SYSTEMS COMMAND
MID-ATLANTIC
NAVAL FACILITIES ENGINEERING SYSTEMS COMMAND - MID-ATLANTIC
NAVAL STATION - NORFOLK, VA
NAVAL SUBMARINE BASE NEW LONDON
GROTON, CONNECTICUT
P-1102 WEAPONS MAGAZINE & ORDNANCE OPERATIONS FACILITY
CLWS MAGAZINE
VENTILATOR DETAILS, SECTIONS AND ELEVATIONS

SCALE: NONE
EPROJECT NO.: 1667770
CONSTR. CONTR. NO.
NAVFAC DRAWING NO. 12894283
SHEET 40 OF 77
S-705

FILE NAME: C:\pw_workdir\dms003\jb2mhill_09050107\d1495963\S-705.dwg LAYOUT NAME: S-705 PLOTTED: Friday, June 13, 2025 - 9:21am USER: 09050107

PIPE LEGEND:	
DESCRIPTION	SYMBOL
PERFORATED PCV DRAIN PIPE	
NON-PERFORATED PVC DRAIN PIPE	

NOTE: ALL PERFORATED PIPING MUST BE INSTALLED WITH PERFORATIONS FACING DOWN.

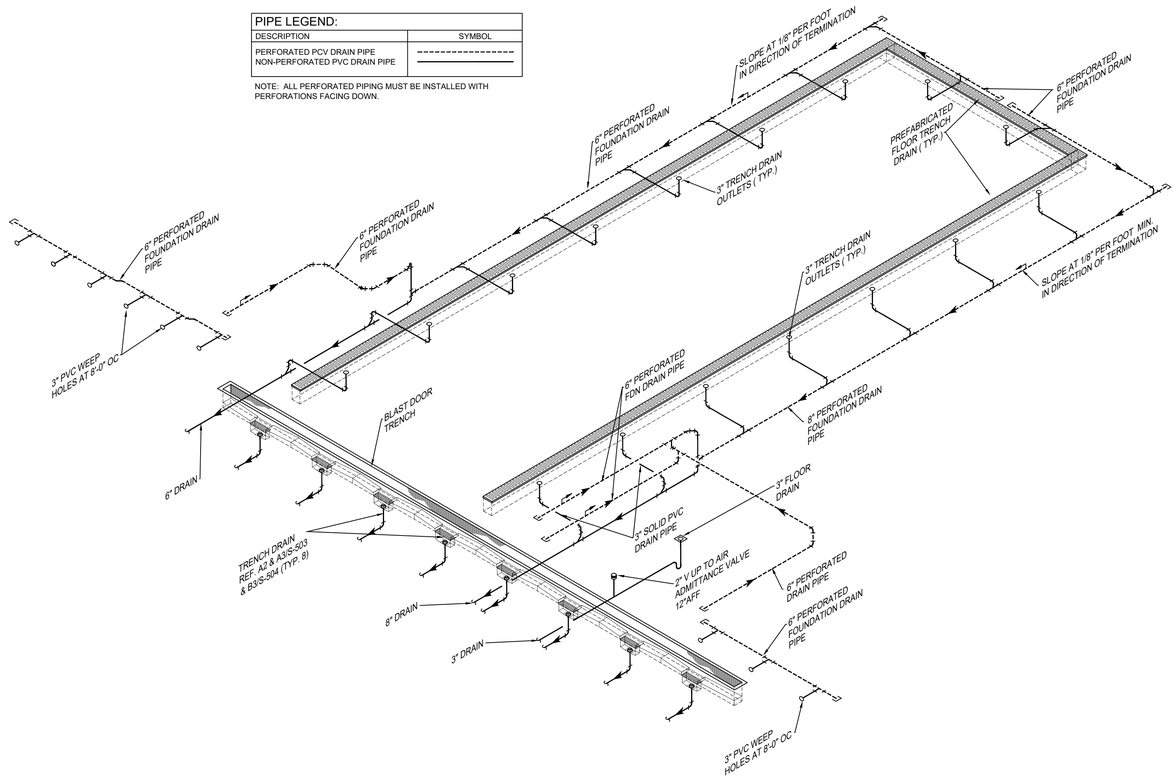

B1 DRAINAGE ISOMETERIC
SCALE: NO SCALE

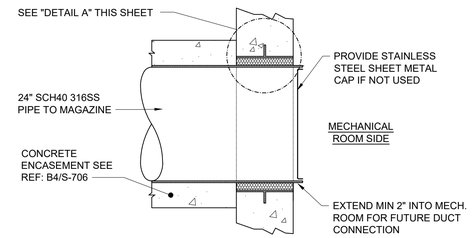

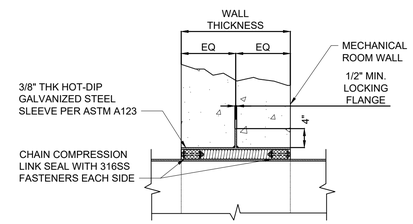

DETAIL A

NOTES:

1. INSTALL OUT-OF-WALL FIRE DAMPERS AT MECHANICAL ROOM PENETRATIONS.
2. OUTER STEEL SLEEVE SIZE TO BE COORDINATED WITH CHAIN COMPRESSION LINK SEAL REQUIREMENTS.
3. INSTALL CONNECTING DUCTWORK AND FITTINGS IN ACCORDANCE WITH DUCTWORK MANUFACTURER'S RECOMMENDATIONS.
4. FILL VOID BETWEEN LINK SEALS WITH MINERAL WOOL.

B3 PIPE THRU MECHANICAL ROOM WALL DETAIL
SCALE: NO SCALE

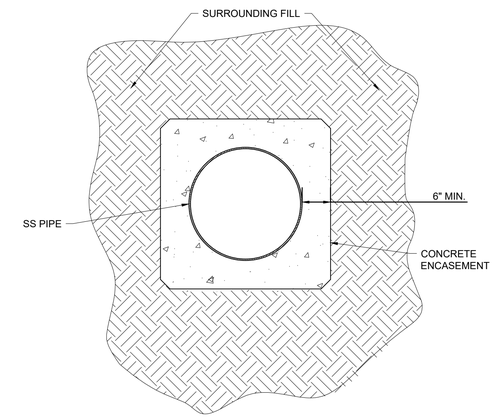

NOTES:

1. DUCTWORK INSTALLED UNDERGROUND MUST BE 24" DIAMETER SCH40 304SS PIPE.
2. TRENCHES MUST BE PITCHED TO PREVENT THE BUILDUP OF WATER AROUND THE PIPE OR WALL PENETRATIONS.
3. PIPE MUST BE TIED DOWN TO AVOID FLOATING DURING POURING OF CONCRETE ENCASEMENT.
4. CONCRETE MUST NOT BE POURED DIRECTLY ONTO THE PIPE. IT MUST BE POURED IN SUCCESSIVE LAYERS AND TAMPED FIRMLY AROUND THE PIPE.
5. FIELD APPLY BITUMEN COATING TO PIPE PRIOR TO CONCRETE ENCASEMENT.
6. CONCRETE ENCASEMENT TO BE MINIMUM OF 6" THICK.
7. WRAP CONCRETE ENCASED DUCTS IN WATERPROOFING MEMBRANE AND SEAL AGAINST ADJACENT MEMBRANE AT STRUCTURAL PENETRATION POINTS.

B4 CONCRETE ENCASED PIPE DETAIL
SCALE: NO SCALE

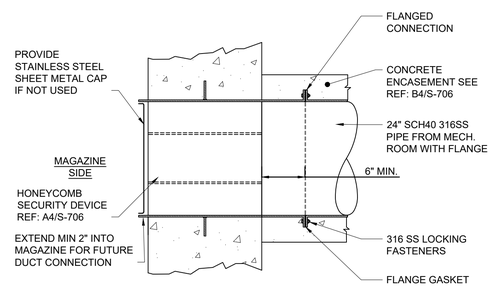

A3 PIPE THRU MAGAZINE WALL DETAIL
SCALE: 3/4" = 1'-0"

0 1' 2' 4'

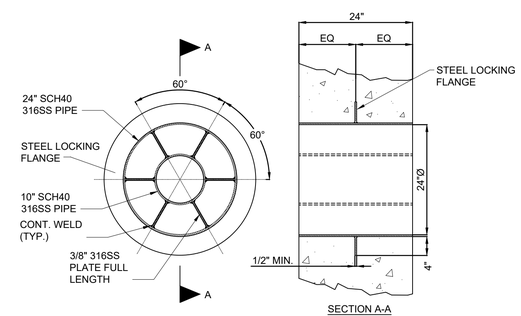

SECTION A-A

NOTES:

1. ASSEMBLY MUST BE FULLY WELDED 316SS.
2. INDIVIDUAL OPENINGS MUST NOT EXCEED 96 SQ. IN. FREE AREA.
3. INNER PIPE MUST BE CENTERED IN OUTER PIPE.
4. FIELD APPLY BITUMEN COATING TO OUTSIDE OF PIPE PRIOR TO CONCRETE ENCASEMENT.

A4 HONEYCOMB SECURITY DEVICE DETAIL
SCALE: 3/4" = 1'-0"

0 1' 2' 4'

THESE DRAWINGS ARE AN EXACT REPLICA OF THE STANDARD MAGAZINE TYPE "CLWS" PROVIDED BY NAVFAC. THE DESIGN WILL BE SITE ADAPTED AND MODIFIED TO MEET THE SPECIFIC GEOTECHNICAL AND LOADING CONDITIONS SPECIFIC TO NAVAL SUBMARINE BASE NEW LONDON, GROTON, CONNECTICUT.

ORIGINAL STANDARD DRAWING IS NAVFAC DRAWING NUMBER 12877641 SHT 32 OF 51

SYM	DESCRIPTION	DATE	APPR.

NAVFAC

SEAL

Jacobs
1100 NORTH GLEBE ROAD
SUITE 500
ARLINGTON, VIRGINIA 22201
571.218.1000
FAX: 571.218.1600

A/E INFO

APPROVED
FOR COMMANDER NAVFAC 8/4/2025

ACTIVITY
APPROVED BY LCDR ELIZABETH OLOKODE NAVFAC NLON FEAD DIRECTOR NEW LONDON, GROTON, CT

SATISFACTORY TO DATE 05/27/2025

DES	JAF	DRW	SFF	CHK	TPH

PM/DM	SMS/CWJ
BRANCH MANAGER	NEK
CHIEF ENG/ARCH	JWJ
FIRE PROTECTION	HPN

DEPARTMENT OF THE NAVY
NAVAL FACILITIES ENGINEERING SYSTEMS COMMAND
MID-ATLANTIC
NAVAL FACILITIES ENGINEERING SYSTEMS COMMAND - MID-ATLANTIC
NAVAL STATION - NORFOLK, VA
NAVAL SUBMARINE BASE NEW LONDON
GROTON, CONNECTICUT
P-1102 WEAPONS MAGAZINE & ORDNANCE OPERATIONS FACILITY
CLWS MAGAZINE

DRAINAGE ISOMETRIC & PENETRATION DETAILS

SCALE: NONE
EPROJECT NO.: 1667770
CONSTR. CONTR. NO.
NAVFAC DRAWING NO. 12894284
SHEET 41 OF 77

S-706

FILE NAME: C:\pw_workdir\den003\pb2mhill_09050107\d1495963\S-706.dwg LAYOUT NAME: S-706 PLOTTED: Friday, June 13, 2025 - 9:21am USER: 09050107

MECHANICAL ABBREVIATIONS

AAT	AMBIENT AIR TEMPERATURE
AAV	AUTOMATIC AIR VENT
ABAND	ABANDONED
A/C	AIR CONDITIONING
ACCEPT.	ACCEPTANCE
ACU	AIR CONDITIONING UNIT
A/D	ACCESS DOOR
ADJ	ADJUSTABLE
A/E	ARCHITECT / ENGINEER
AFF	ABOVE FINISHED FLOOR
AHU	AIR HANDLING UNIT
A/L	ACOUSTICALLY LINED
APPROX	APPROXIMATE
ARCH	ARCHITECTURAL / ARCHITECT
AS	AIR SEPARATOR
ATM	ATMOSPHERE
BAS	BUILDING AUTOMATION SYSTEM
B/D	BACKDRAFT DAMPER
BF	BLIND FLANGE
BHP	BRAKE HORSEPOWER
BLDG.	BUILDING
BTU	BRITISH THERMAL UNIT
BTUH	BRITISH THERMAL UNITS PER HOUR
CA	COMPRESSED AIR
CAP	PIPE/DUCT CAP
CAP.	CAPACITY
CO_2	CARBON DIOXIDE
CC	COOLING COIL
CD	CONDENSATE DRAIN
CFM	CUBIC FEET PER MINUTE
CH	CHILLER
CHBT	CHILLED WATER BUFFER TANK
CHW	CHILLED WATER
CHW-C	CHILLED WATER - CAMPUS
CHWP	CHILLED WATER PUMP
CLG	CEILING
CMU	CONCRETE MASONRY UNIT
CO	CLEANOUT
COEFF	COEFFICIENT
COMM	COMMUNICATION
CONN	CONNECTION
CONT.	CONTINUATION
CR	CONDENSER WATER RETURN
CRAC	COMPUTER ROOM AIR CONDITIONING UNIT
CS	CONDENSER WATER SUPPLY
CV	CONTROL VALVE
CW	CITY WATER
CWR	CHILLED WATER RETURN
CWR-C	CHILLED WATER RETURN - CAMPUS
CWS	CHILLED WATER SUPPLY
CWS-C	CHILLED WATER SUPPLY - CAMPUS
CWS&R	CHILLED WATER SUPPLY & RETURN
(D)	DEMOLISH AND REMOVE
DAC	DOOR AIR CURTAIN
DB	DRY BULB
DCW	DOMESTIC COLD WATER
DEG	DEGREES
DEMO	DEMOLITION
DET	DETAIL
DIA	DIAMETER
DIFF	DIFFUSER
DN	DOWN
DR	DRAIN
DWG	DRAWING
DX	DIRECT EXPANSION
(E)	EXISTING TO REMAIN
EA	EXHAUST AIR
EA.	EACH
EAT	ENTERING AIR TEMPERATURE
EF	EXHAUST FAN
EFF	EFFICIENCY
E.G.	FOR EXAMPLE
EL	ELEVATION
ELEC	ELECTRICAL
ESP	EXTERNAL STATIC PRESSURE
ET	EXPANSION TANK
EWT	ENTERING WATER TEMPERATURE
EXH	EXHAUST
EXIST.	EXISTING
EXP	EXPANSION
F	FIRE PROTECTION WATER SUPPLY
FCU	FAN COIL UNIT
F/D	FIRE DAMPER
FDC	FIRE DEPARTMENT CONNECTION
FDR	FLOOR DRAIN
FF	FINISHED FLOOR
FLEX	FLEXIBLE
FPM	FEET PER MINUTE
FPS	FEET PER SECOND
FPTU	FAN POWERED TERMINAL UNIT
FT	FEET
FTR	FINNED TUBE RADIATION
FT WG	FEET (WATER GAUGE)
GPH	GALLONS PER HOUR
GPM	GALLONS PER MINUTE
GR	GRILLE
HC	HEATING COIL
HDP	HIGH DENSITY PUMPING UNIT
HED	HOSE-END DRAIN
HP	HORSEPOWER
HPR	HIGH PRESSURE CONDENSATE RETURN
HPS	HIGH PRESSURE STEAM
HR	HOUR
HGT	HEIGHT
HTR	HEATER
HW	HEATING WATER
HWP	HEATING WATER PUMP
HWR	HEATING WATER RETURN
HWS	HEATING WATER SUPPLY
HWS&R	HEATING WATER SUPPLY & RETURN
HZ	HERTZ
IN.	INCHES
IND	INDEPENDENT
IN. WG	INCHES (WATER GAUGE)
IPLV	INTEGRATED PART LOAD VALUE
IPS	IRON PIPE SIZE
KW	KILOWATTS
KOS	KEY OPERATED SWITCH
L	LONG / LENGTH
LAT	LEAVING AIR TEMPERATURE
LD	LINER DIFFUSER
LF	LINEAR FEET
LPR	LOW PRESSURE CONDENSATE RETURN
LPS	LOW PRESSURE CONDENSATE SUPPLY
LWT	LEAVING WATER TEMPERATURE
MA	MIXED AIR
MAV	MANUAL AIR VENT
MAX	MAXIMUM
MBH	THOUSANDS OF BTUs PER HOUR
MECH	MECHANICAL
MEZZ	MEZZANINE
MFG	MANUFACTURER
MIN	MINIMUM
M/D	MOTOR OPERATED DAMPER
MPR	MEDIUM PRESSURE CONDENSATE RETURN
MPS	MEDIUM PRESSURE CONDENSATE SUPPLY
N/A	NOT APPLICABLE
NC	NOISE CRITERIA
N.C.	NORMALLY CLOSED
NIC	NOT IN CONTRACT
N.O.	NORMALLY OPEN
NPLV	NON-STANDARD PART LOAD VALUE
NPSHR	NET POSITIVE SUCTION HEAD REQUIRED
NPW	NON-POTABLE WATER
NRL	NAVAL RESEARCH LABORATORY
NTS	NOT TO SCALE
OA	OUTSIDE AIR
O.C.	ON CENTER
OD	OUTSIDE DIAMETER
OED	OPEN END DUCT
OEP	OPEN END PIPE
P	PUMP
P&ID	PROCESS & INSTRUMENTATION DIAGRAM
PC	PUMPED CONDENSATE RETURN
PCHW	PRIMARY CHILLED WATER
PCWR	PRIMARY CHILLED WATER RETURN
PCWS	PRIMARY CHILLED WATER SUPPLY
PCWS&R	PRIMARY CHILLED WATER SUPPLY & RETURN
PD	PRESSURE DROP
PIV	POST INDICATOR VALVE
PRESS	PRESSURE
PRV	PRESSURE REGULATING VALVE
PSI	POUNDS PER SQUARE INCH
P/T	PRESSURE/TEMPERATURE PORT
PTRV	PRESSURE/TEMPERATURE RELIEF VALVE
QTY	QUANTITY
R-134A	REFRIGERANT TYPE (134A, 410A, ETC.)
RA	RETURN AIR
RAD	RADIUS
RAF	RAISED ACCESS FLOOR
REFRIG	REFRIGERANT
REG	REGISTER
RET	RETURN
REV	REVOLUTIONS
RH	RELATIVE HUMIDITY
RM	ROOM
RPM	REVOLUTIONS PER MINUTE
RPP	REDUCED PRESSURE PRINCIPLE
RR	REFRIGERANT RETURN
RS	REFRIGERANT SUPPLY
RV	RELIEF VALVE
SA	SUPPLY AIR
SAD	SOUND ATTENUATING DEVICE
SC	STEAM COIL
SCH	SCHEDULE
SCHW	SECONDARY CHILLED WATER
SCWR	SECONDARY CHILLED WATER RETURN
SCWS	SECONDARY CHILLED WATER SUPPLY
SE	SMOKE EXHAUST
SENS	SENSIBLE
SF	SHOT FEEDER
SH	SENSIBLE HEAT
SQ	SQUARE
SUP	SUPPLY
TDH	TOTAL DYNAMIC HEAD
TEMP	TEMPERATURE
THK	THICK
TONS	TONS OF REFRIGERATION
TSP	TOTAL STATIC PRESSURE
TU	TERMINAL UNIT
TYP	TYPICAL
UH	UNIT HEATER
UL	UNDERWRITERS LABORATORIES
V	VOLTS
VA	VOLT-AMPERE
VAC	VACUUM AIR
VAV	VARIABLE AIR VOLUME
V/D	VOLUME DAMPER (MANUAL)
VERT	VERTICAL
VT	VENT
VTR	VENT THRU ROOF
W	WIDE / WIDTH, WATTS
WB	WET BULB
WTR	WATER
W/	WITH
dBA	DECIBELS (A-WEIGHTED)
@	AT
°C	DEGREES CELSIUS
°F	DEGREES FAHRENHEIT
ϕ	ELECTRICAL PHASE
%	PERCENT
ΔP	PRESSURE DROP

MECHANICAL SYMBOLS

SINGLE-LINE PIPING ELEMENTS

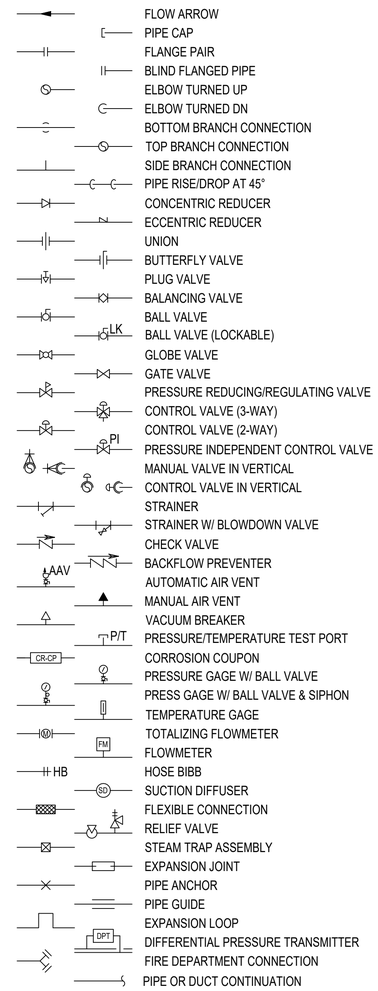

CONTROL SYMBOLS

ALM	GENERAL ALARM
AFMA	AIRFLOW MONITORING ARRAY
AX	AUXILIARY
CD	CONTROL DAMPERS
CI	CONTROL INPUT
CM	CONTROL MODULE
CS	CURRENT SWITCH
DA	DAMPER ACTUATOR
DPI	DIFFERENTIAL PRESSURE INPUT
DPS	DIFFERENTIAL PRESSURE SWITCH
DPT	DIFFERENTIAL PRESSURE TRANSMITTER
ED	ENABLE/DISABLE
ES	END SWITCH
FM	FLOWMETER
H	HUMIDITISTAT
KOS	KEY OPERATED SWITCH
SD	SMOKE DETECTOR
SPT	STATIC PRESSURE TRANSMITTER
SS	START/STOP
T	THERMOSTAT
TS	TEMPERATURE SENSOR
VA	VALVE ACTUATOR
VFD	VARIABLE FREQUENCY DRIVE

DUCTWORK ELEMENTS

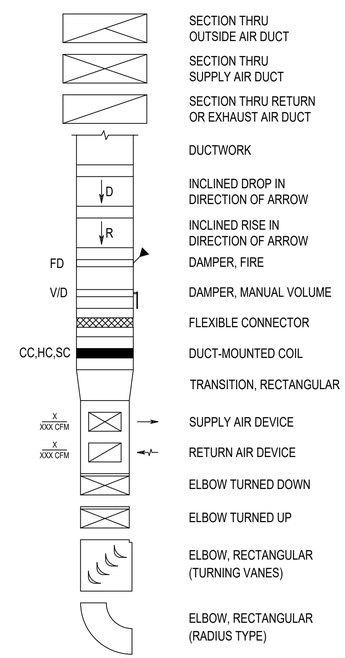

GENERAL MECHANICAL NOTES

1. THESE GENERAL NOTES APPLY TO ALL MECHANICAL DRAWINGS IN THIS SET. SHEET SPECIFIC NOTES ARE INDICATED ON EACH SHEET UNDER GENERAL SHEET NOTES. NOT ALL SYMBOLS AND ABBREVIATIONS ARE USED.
2. THIS MECHANICAL DRAWING SET IS A SITE ADAPTED DESIGN BASED ON A GOVERNMENT PROVIDED CLWS STANDARD DESIGN PACKAGE. NO SPECIFIC HVAC, PIPING, OR CONTROLS DRAWINGS WERE PROVIDED AS PART OF THE CLWS STANDARD DESIGN. MECHANICAL DRAWINGS HEREIN ARE IN ADDITION TO THE CLWS STANDARD DESIGN PROVIDED.
3. THIS MECHANICAL DRAWING SET IS A TYPICAL DESIGN TO BE IMPLEMENTED TO EACH CLWS MAGAZINE IN THE PROJECT SCOPE.
4. PROVIDE ALL MATERIALS AND EQUIPMENT AND PEFORM ALL LABOR REQUIRED TO INSTALL COMPLETE AND OPERABLE MECHANICAL SYSTEMS AS INDICATED ON THE DRAWINGS, AS SPECIFIED, AND AS REQUIRED BY CODE.
5. INSTALL ALL MECHANICAL EQUIPMENT AND APPURTENANCES IN ACCORDANCE WITH MANUFACTURERS' RECOMMENDATIONS, CONTRACT DOCUMENTS, APPLICABLE CODES, AND REGULATIONS.
6. PROVIDE PIPE SLEEVES FOR PIPING PENETRATIONS THRU WALLS. PROVIDE CONTINUOUS SEALANT JOINT AROUND PIPE SLEEVE, SLEEVE BOTH SIDE OF THE WALL, WATERTIGHT.
7. OPENINGS IN FIRE WALLS DUE TO DUCTWORK, CONDUIT, ETC., MUST BE FIRE STOPPED.
8. MOUNT THERMOSTATS 48 INCHES ABOVE THE FINISHED FLOOR AND FLUSH WITH THE WALL SURFACE.
9. TESTING AND BALANCING (TAB): TAB EQUIPMENT IN 2-SEASONS.
10. MECHANICAL EQUIPMENT, WHICH IS PROVIDED WITH MANUFACTURER'S INSTALLED CONTROLS, MUST BE STARTED UP BY THE MANUFACTURER'S REPRESENTATIVE IN CONJUNCTION WITH THE CONTROLS CONTRACTOR (NOT MECHANICAL CONTRACTOR). TRAINING AND MANUALS FOR THE MANUFACTURER'S INSTALLED CONTROLS MUST BE PROVIDED BY THE EQUIPMENT MANUFACTURER'S REPRESENTATIVE. CONTROLS CONTRACTOR IS RESPONSIBLE FOR COORDINATING WITH MANUFACTURER'S REPRESENTATIVE FOR THE COMMUNICATION OF THE DDC SYSTEM TO THE MANUFACTURER'S INSTALLED CONTROLS.

SYM	DESCRIPTION	DATE	APPR.

NAVFAC

COMMONWEALTH OF VIRGINIA
CHRISTOPHER W. HILL
Lic. No. 0402055245
06/23/2025
PROFESSIONAL ENGINEER
SEAL

Jacobs
1100 NORTH GLEBE ROAD
SUITE 500
ARLINGTON, VIRGINIA 22201
571.218.1000
FAX: 571.218.1600
A/E INFO

APPROVED
FOR COMMANDER NAVFAC 8/4/2025

ACTIVITY
APPROVED BY LCDR ELIZABETH OLOKODE NAVFAC NLON FEAD DIRECTOR NEW LONDON, GROTON, CT

SATISFACTORY TO DATE 05/27/2025

DES CWH	DRW CHW	CHK MJL	
PM/DM	SMS/CWJ		
BRANCH MANAGER	ALG		
CHIEF ENG/ARCH	JWJ		
FIRE PROTECTION	HPN		

DEPARTMENT OF THE NAVY
NAVAL FACILITIES ENGINEERING SYSTEMS COMMAND
MID-ATLANTIC
NAVAL FACILITIES ENGINEERING SYSTEMS COMMAND - MID-ATLANTIC
NAVAL STATION - NORFOLK, VA
NAVAL SUBMARINE BASE NEW LONDON
GROTON, CONNECTICUT
P-1102 WEAPONS MAGAZINE & ORDNANCE OPERATIONS FACILITY
CLWS MAGAZINE

MECHANICAL LEGEND AND GENERAL NOTES

SCALE: AS SHOWN
EPROJECT NO.: 1667770
CONSTR. CONTR. NO.
NAVFAC DRAWING NO. 12894285
SHEET 42 OF 77

M-001S

FILE NAME: C:\pw_workdir\dms0043\jng_billcar\d1509825\CLWS M-001S.dwg LAYOUT NAME: M-001 PLOTTED: Tuesday, June 17, 2025 - 1:03pm USER: HIICW

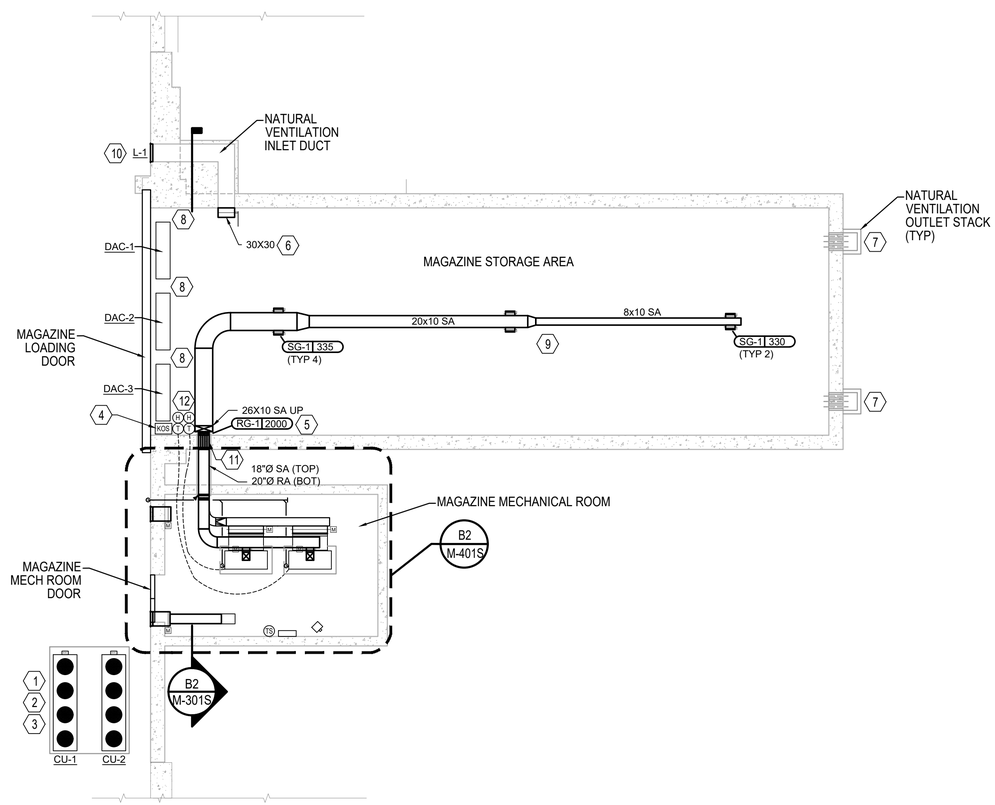

A2 MECHANICAL DUCTWORK PLAN

3/32" = 1'-0"

GENERAL SHEET NOTES

1. REFER TO M-001 FOR ABBREVIATIONS, LEGEND, AND GENERAL NOTES.
2. MECHANICAL DUCTWORK PLAN IS TYPICAL FOR EACH CLWS MAGAZINE.
3. REFER TO STANDARD DESIGN AND SITE ADAPTED STRUCTURAL AND ELECTRICAL SHEETS FOR COORDINATION.

KEYNOTES

1. PROVIDE FULLY REDUNDANT AHU/CU SYSTEMS AND CONTROL SYSTEMS. AHU SYSTEM MUST ONLY BE ENERGIZED WHEN MANUAL DAMPERS OF NATURAL VENTILATION SYSTEM ARE CLOSED, LOADING DOOR IS CLOSED, AND KEY OPERATED SWITCH IS SET TO ON .
2. PROVIDE AHU/CU SYSTEM EQUIPMENT ON GRADE AND FINISHED FLOOR WITH 6 INCH THICK CONCRETE HOUSEKEEPING PAD. REFER TO CIVIL.
3. PROVIDE LOCKABLE ACCESS DOORS ON EQUIPMENT LOCATED EXTERIOR TO THE MAGAZINE; PROVIDE TAMPER PROOF HARDWARE AT EACH EQUIPMENT PANEL.
4. PROVIDE KEY OPERATED ON/OFF SWITCH ASSOCIATED WITH HVAC EQUIPMENT. MOUNT ON INTERIOR WALL 48" AFF. PROTECT DEVICE FROM DAMAGE. PROVIDE WITH CLEARLY LABELED SIGNAGE TO ONLY ENERGIZE WHEN NATURAL VENTILATION SYSTEM DAMPERS ARE CLOSED.
5. PROVIDE RETURN AIR GRILLE FLUSH WITH INTERIOR WALL.
6. PROVIDE FLANGE, DUCTWORK, AND LOW LEAKAGE DAMPER THAT IS MANUALLY LOCKABLE. DAMPER MUST BE CLOSED AND LOCKED WHEN AHU SYSTEM IS ENERGIZED. REFER TO C5/S-704.
7. VENTILATION STACK LOW LEAKAGE DAMPER MUST BE CLOSED AND LOCKED WHEN AHU SYSTEM IS ENERGIZED. REFER TO A1/S-705.
8. PROVIDE AIR CURTAIN. AIR CURTAIN MUST BE ENERGIZED VIA PRESSURE SWITCH WHEN DOOR IS OPEN. AHU SYSTEM MUST REMAIN ENERGIZED.
9. MOUNT DUCTWORK AS TIGHT TO CEILING AS POSSIBLE WHILE MAINTAINING HANGER CLEARANCES.
10. PROVIDE HEAVY DUTY, WIND DRIVEN RAIN RESISTANT INTAKE LOUVER. REFER TO A1/S-704.
11. PROVIDE HONEYCOMB SECURITY DEVICE IN SUPPLY AND RETURN DUCTWORK. REFER TO A4/S-706. SUPPLY AND RETURN DUCTS ARE STACKED BETWEEN MECHANICAL ROOM AND STORAGE AREA.
12. SPACE TEMPERATURE AND HUMIDITY SENSORS ARE PROVIDED BY UNIT MANUFACTURER FOR INSTALLATION IN FIELD. INSTALL AND CONNECT SENSORS IN ACCORDANCE WITH REQUIREMENTS AND INSTRUCTIONS PROVIDED BY UNIT MANUFACTURER. PROVIDE CLEAR LOCK BOX TO PREVENT TAMPERING OR DAMAGE OF SENSOR.

0 2' 4' 8' 16'

3/32" = 1'-0"

SYM	DESCRIPTION	DATE	APPR

NAVFAC

COMMONWEALTH OF VIRGINIA
CHRISTOPHER W. HILL
Lic. No. 0402055245
06/23/2025
PROFESSIONAL ENGINEER
SEAL

Jacobs
1100 NORTH GLEBE ROAD
SUITE 500
ARLINGTON, VIRGINIA 22201
571.218.1000
FAX: 571.218.1600
A/E INFO

APPROVED
FOR COMMANDER NAVFAC 8/14/2025
ACTIVITY
APPROVED BY LCDR ELIZABETH OLOKODE NAVFAC NLON FEAD DIRECTOR NEW LONDON, GROTON, CT
SATISFACTORY TO DATE 05/27/2025

DES	DRW	CHK
CWH	CHW	MJL

PM/DM	SMS/CWJ
BRANCH MANAGER	ALG
CHIEF ENG/ARCH	JWJ
FIRE PROTECTION	HPN

DEPARTMENT OF THE NAVY
NAVAL FACILITIES ENGINEERING SYSTEMS COMMAND
MID-ATLANTIC
NAVAL FACILITIES ENGINEERING SYSTEMS COMMAND - MID-ATLANTIC
NAVAL STATION - NORFOLK, VA
NAVAL SUBMARINE BASE NEW LONDON
GROTON, CONNECTICUT
P-1102 WEAPONS MAGAZINE & ORDNANCE OPERATIONS FACILITY
CLWS MAGAZINE
MECHANICAL SECTIONS – TYPICAL

SCALE: AS SHOWN
EPROJECT NO.: 1667770
CONSTR. CONTR. NO.
NAVFAC DRAWING NO.
12894286
SHEET 43 OF 77
M-101S

FILE NAME: C:\pw_workdir\dms003\jmg_hillcw\d1509825\CLWS M-101S.dwg LAYOUT NAME: M-101 PLOTTED: Tuesday, June 17, 2025 – 1:03pm USER: HILCW

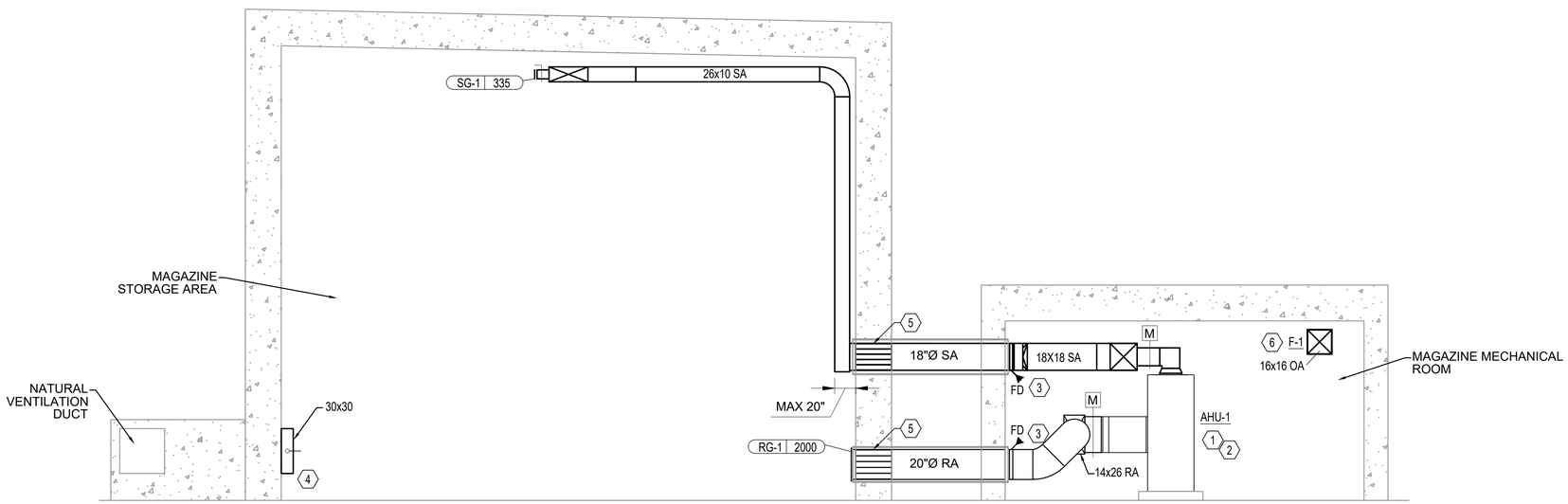

B2 MECHANICAL DUCTWORK SECTION
1/4" = 1'-0"

GENERAL SHEET NOTES

1. REFER TO M-001 FOR ABBREVIATIONS, LEGEND, AND GENERAL NOTES.
2. MECHANICAL DUCTWORK PLAN IS TYPICAL FOR EACH CLWS MAGAZINE.
3. REFER TO STANDARD DESIGN AND SITE ADAPTED STRUCTURAL AND ELECTRICAL SHEETS FOR COORDINATION.

KEYNOTES

1. PROVIDE FULLY REDUNDANT AHU SYSTEMS AND CONTROL SYSTEMS. AHU SYSTEM MUST ONLY BE ENERGIZED WHEN MANUAL DAMPERS OF NATURAL VENTILATION SYSTEM ARE CLOSED, LOADING DOOR IS CLOSED, AND KEY OPERATED SWITCH IS SET TO ON.
2. PROVIDE AHU SYSTEM EQUIPMENT ON FINISHED FLOOR WITH 6 INCH THICK CONCRETE HOUSEKEEPING PAD THAT EXTENDS 6 INCHES PAST EQUIPMENT DIMENSIONS ON EACH SIDE. REFER TO STRUCTURAL.
3. PROVIDE OUT-OF-WALL FIRE DAMPER AT SUPPLY AND RETURN DUCT PENETRATIONS. PROVIDE ACCESS DOOR FOR INSPECTION AND MAINTENANCE.
4. PROVIDE FLANGE, DUCTWORK, AND LOW LEAKAGE DAMPER THAT IS MANUALLY LOCKABLE. DAMPER MUST BE CLOSED AND LOCKED WHEN AHU SYSTEM IS ENERGIZED. REFER TO C5/S-704.
5. PROVIDE HONEYCOMB SECURITY DEVICE IN SUPPLY AND RETURN DUCTWORK. REFER TO A4/S-706.
6. PROVIDE VENTILATION FAN WITH MULTISPEED MOTOR AND OSHA SCREEN.

0 1' 2' 4' 8'
1/4" = 1'-0"

SYM	DESCRIPTION	DATE	APPR

NAVFAC

COMMONWEALTH OF VIRGINIA
CHRISTOPHER W. HILL
Lic. No. 0402055245
06/23/2025
PROFESSIONAL ENGINEER
SEAL

Jacobs
1100 NORTH GLEBE ROAD
SUITE 500
ARLINGTON, VIRGINIA 22201
571.218.1000
FAX: 571.218.1600

A/E INFO

APPROVED
FOR COMMANDER NAVFAC 8/4/2025
ACTIVITY
APPROVED BY LCDR ELIZABETH OLOKODE NAVFAC NLON FEAD DIRECTOR NEW LONDON, GROTON, CT
SATISFACTORY TO DATE 05/27/2025

DES CWH	DRW CHW	CHK MJL	
PM/DM	SMS/CWJ		
BRANCH MANAGER	ALG		
CHIEF ENG/ARCH	JWJ		
FIRE PROTECTION	HPN		

DEPARTMENT OF THE NAVY
NAVAL FACILITIES ENGINEERING SYSTEMS COMMAND
MID-ATLANTIC
NAVAL FACILITIES ENGINEERING SYSTEMS COMMAND - MID-ATLANTIC
NAVAL STATION - NORFOLK, VA
NAVAL SUBMARINE BASE NEW LONDON
GROTON, CONNECTICUT
P-1102 WEAPONS MAGAZINE & ORDNANCE OPERATIONS FACILITY
CLWS MAGAZINE
MECHANICAL SECTIONS – TYPICAL

SCALE: AS SHOWN
EPROJECT NO.: 1667770
CONSTR. CONTR. NO.
NAVFAC DRAWING NO. 12894287
SHEET 44 OF 77
M-301S

FILE NAME: C:\pw_workdir\dms0033\jrg_hillcw\d1509825\CLWS M-301S.dwg LAYOUT NAME: M-401 PLOTTED: Tuesday, June 17, 2025 - 1:03pm USER: HILCW

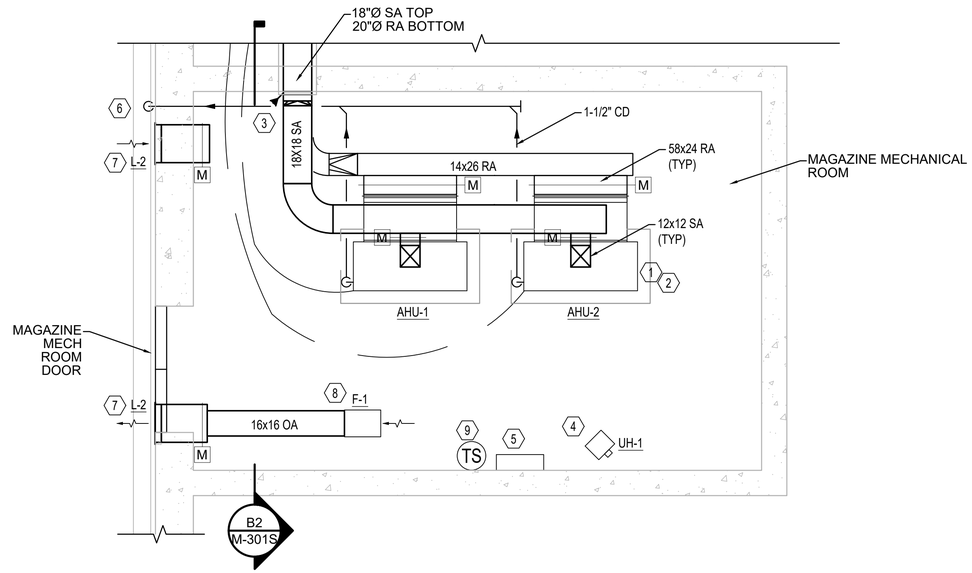

B2 MECHANICAL DUCTWORK PLAN - ENLARGED MECHANICAL ROOM

1/4" = 1'-0"

GENERAL SHEET NOTES

1. REFER TO M-001 FOR ABBREVIATIONS, LEGEND, AND GENERAL NOTES.
2. MECHANICAL DUCTWORK PLAN IS TYPICAL FOR EACH CLWS MAGAZINE.
3. REFER TO STANDARD DESIGN AND SITE ADAPTED STRUCTURAL AND ELECTRICAL SHEETS FOR COORDINATION.

KEYNOTES

1. PROVIDE FULLY REDUNDANT AHU SYSTEMS AND CONTROL SYSTEMS. AHU SYSTEM MUST ONLY BE ENERGIZED WHEN MANUAL DAMPERS OF NATURAL VENTILATION SYSTEM ARE CLOSED, LOADING DOOR IS CLOSED, AND KEY OPERATED SWITCH IS SET TO ON.
2. PROVIDE AHU SYSTEM EQUIPMENT ON FINISHED FLOOR WITH 6 INCH THICK CONCRETE HOUSEKEEPING PAD THAT EXTENDS 6 INCHES PAST EQUIPMENT DIMENSIONS ON EACH SIDE. REFER TO STRUCTURAL.
3. PROVIDE OUT-OF-WALL FIRE DAMPER AT SUPPLY AND RETURN DUCT PENETRATIONS. PROVIDE ACCESS DOOR FOR INSPECTION AND MAINTENANCE.
4. PROVIDE ELECTRIC UNIT HEATER. MOUNT EQUIPMENT AS TIGHT TO CEILING AS POSSIBLE WHILE MAINTAINING MANUFACTURER'S AND HANGER CLEARANCES.
5. PROVIDE BAS CONTROL PANEL.
6. ROUTE CONDENSATE DRAIN TO DAYLIGHT.
7. PROVIDE HEAVY DUTY, WIND DRIVEN RAIN RESISTANT LOUVER WITH LOW LEAKAGE MOTORIZED DAMPER.
8. PROVIDE VENTILATION FAN WITH MULTISPEED MOTOR AND OSHA SCREEN.
9. PROVIDE SPACE TEMPERATURE SENSOR FOR ROOM TEMPERATURE CONTROL AND ALARM.

0 1' 2' 4' 8'
1/4" = 1'-0"

SYM	DESCRIPTION	DATE	APPR

NAVFAC

COMMONWEALTH OF VIRGINIA
CHRISTOPHER W. HILL
Lic. No. 0402055245
06/23/2025
PROFESSIONAL ENGINEER
SEAL

Jacobs
1100 NORTH GLEBE ROAD
SUITE 500
ARLINGTON, VIRGINIA 22201
571.218.1000
FAX: 571.218.1600
A/E INFO

APPROVED
FOR COMMANDER NAVFAC 8/14/2025
ACTIVITY
APPROVED BY LCDR ELIZABETH OLOKODE NAVFAC NLON FEAD DIRECTOR NEW LONDON, GROTON, CT
SATISFACTORY TO DATE 05/27/2025

DES CWH	DRW CHW	CHK MJL
PM/DM	SMS/CWJ	
BRANCH MANAGER	ALG	
CHIEF ENG/ARCH	JWJ	
FIRE PROTECTION	HPN	

DEPARTMENT OF THE NAVY
NAVAL FACILITIES ENGINEERING SYSTEMS COMMAND
MID-ATLANTIC
NAVAL FACILITIES ENGINEERING SYSTEMS COMMAND
NAVAL FACILITIES ENGINEERING SYSTEMS COMMAND - MID-ATLANTIC
NAVAL STATION - NORFOLK, VA
NAVAL SUBMARINE BASE NEW LONDON
GROTON, CONNECTICUT
P-1102 WEAPONS MAGAZINE & ORDNANCE OPERATIONS FACILITY
CLWS MAGAZINE
MECHANICAL ENLARGED PLAN – TYPICAL

SCALE: AS SHOWN
EPROJECT NO.: 1667770
CONSTR. CONTR. NO.
NAVFAC DRAWING NO.
12894288
SHEET 45 OF 77
M-401S

FILE NAME: C:\pw_work\dr\dev003\jog_hillck\d1509823\CLWS M-401S.dwg LAYOUT NAME: M-401 PLOTTED: Tuesday, June 17, 2025 – 1:03pm USER: HILCW

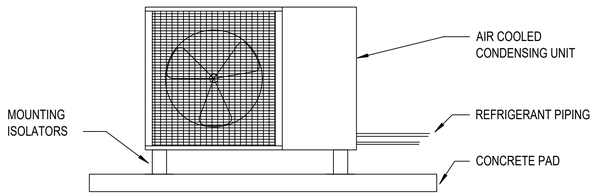

NOTES:
1. MOUNT CONDENSING UNIT TO 6-INCH CONCRETE PAD. SHIM TO LEVEL.
2. ATTACHING AND SECURING OF EQUIPMENT TO PAD MUST BE IN ACCORDANCE WITH MANUFACTURER'S INSTALLATION GUIDELINES.

C1 SPLIT SYSTEM CONDENSING UNIT DETAIL
NTS

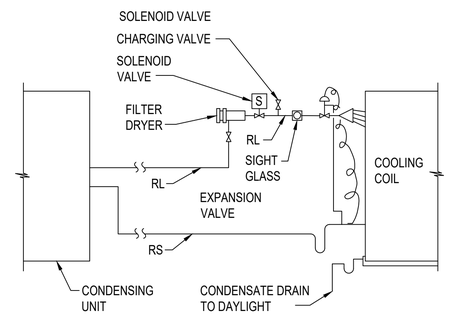

C3 REFRIGERANT PIPING DETAIL
NTS

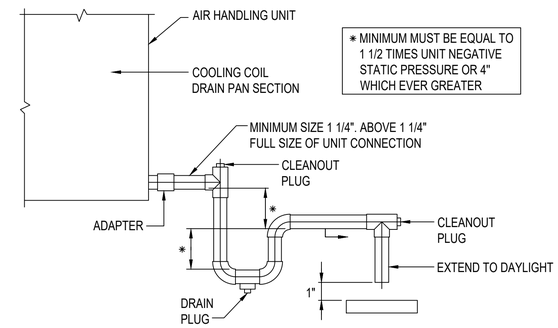

C4 CONDENSATE DRAIN TRAP DETAIL
NTS

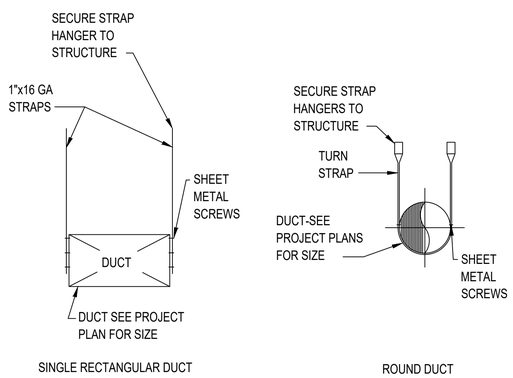

SINGLE RECTANGULAR DUCT

ROUND DUCT

NOTE:
1. DUCTS MUST BE SUPPORTED AT LESS THAN 10'-0" O.C.

A1 DUCT HANGER AND SUPPORT DETAIL
NTS

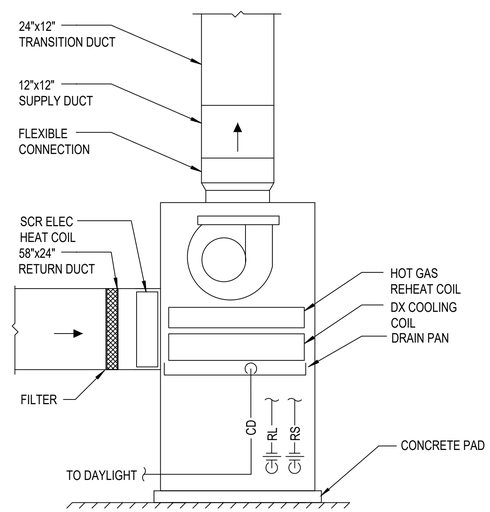

A3 VERTICAL AHU DETAIL
NTS

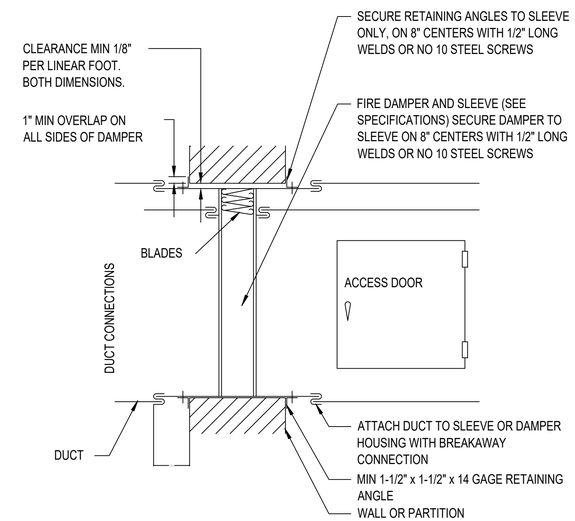

A4 VERTICAL FIRE DAMPER DETAIL
NTS

SYM	DESCRIPTION	DATE	APPR

NAVFAC

COMMONWEALTH OF VIRGINIA
CHRISTOPHER W. HILL
Lic. No. 0402055245
06/23/2025
PROFESSIONAL ENGINEER
SEAL

Jacobs
1100 NORTH GLEBE ROAD
SUITE 500
ARLINGTON, VIRGINIA 22201
571.218.1000
FAX: 571.218.1600
A/E INFO

APPROVED:
FOR COMMANDER NAVFAC 8/14/2025
ACTIVITY
APPROVED BY LCDR ELIZABETH
OLOKODE NAVFAC NLON FEAD
DIRECTOR NEW LONDON, GROTON, CT
SATISFACTORY TO DATE 05/27/2025

DES	CWH	DRW	CHW	CHK	MJL
PM/DM	SMS/CWJ				
BRANCH MANAGER	ALG				
CHIEF ENG/ARCH	JWJ				
FIRE PROTECTION	HPN				

DEPARTMENT OF THE NAVY
NAVAL FACILITIES ENGINEERING SYSTEMS COMMAND
MID-ATLANTIC
NAVAL FACILITIES ENGINEERING SYSTEMS COMMAND - MID-ATLANTIC
NAVAL STATION - NORFOLK, VA
NAVAL SUBMARINE BASE NEW LONDON
GROTON, CONNECTICUT
P-1102 WEAPONS MAGAZINE & ORDNANCE OPERATIONS FACILITY
CLWS MAGAZINE
MECHANICAL DETAILS

SCALE: AS SHOWN
EPROJECT NO.: 1667770
CONSTR. CONTR. NO.
NAVFAC DRAWING NO.
12894289
SHEET 46 OF 77
M-501S

FILE NAME: C:\pw_workdir\dm0031\eng_hillcw\d1509825\CLWS M-501S.dwg LAYOUT NAME: M-501 PLOTTED: Tuesday, June 17, 2025 - 1:03pm USER: HHCW

AIR HANDLING UNIT SCHEDULE

TAG	LOCATION	SERVICE	TYPE	SUPPLY FAN									DX COOLING COIL						HOT GAS REHEAT COIL					REFRIGERANT TYPE	HEATING COIL	FILTER MERV	UNIT ELECTRICAL DATA					DIMENSIONS				NOTES
							MOTOR DATA																													
				SA (CFM)	ESP @ MAX CFM (IN WC)	TYPE	QTY	RPM	BHP (TOTAL)	HP (EACH)	V	PH	Hz	EAT DB / WB (°F)	LAT DB/WB (°F)	TOTAL CAPACITY (MBH)	SENSIBLE CAPACITY (MBH)	MIN ROWS	MAX FACE VELOCITY (FPM)	EAT DB (°F)	LAT DB (°F)	TOTAL CAPACITY (MBH)	MIN ROWS	MAX FACE VELOCITY (FPM)		TOTAL CAPACITY (KW)		V	PH	HZ	MCA	MOCP	LENGTH (INCHES)	WIDTH (INCHES)	HEIGHT (INCHES)	WEIGHT (LBS)	
AHU-1,2	MECH ROOM	MAGAZINE STORAGE	SPLIT SYSTEM DX COOLING ELECTRIC HEAT	2,000	1.00	DIRECT DRIVE PLENUM	1	1,030	0.81	1.0	480	3	60	77.5 °F / 73.4 °F	49.5°F / 49.5°F	153.9	62.7	6.0	500	49.5	69.5	43.2	1	500	R-410A	50	8	480	3	60	81.0	90	72	31	79	1157	1 THRU 6

NOTES:
1. UNIT PERFORMANCE DATA PROVIDED AT DEHUMIDIFICATION DESIGN CONDITION. ASSUMED MAGAZINE STORAGE AREA AIR VOLUME AT FULL WARM, MOIST CONDITION WITH 40 MINUTES TO DRY AIR VOLUME TO INTERIOR SET POINT OF 50% RH.
2. PROVIDE AIR HANDLING UNIT WITH VARIABLE COMPRESSOR, DX COOLING COIL, HOT GAS REHEAT COIL, SCR CONTROLLED ELECTRIC RESISTANCE HEATING COIL.
3. PROVIDE SINGLE POINT POWER CONNECTION WITH FACTORY MOUNTED AND WIRED NON-FUSED DISCONNECT SWITCH.
4. PROVIDE ALL REQUIRED ACCESSORIES AND APPURTENANCES FOR AIR HANDLING UNIT CONNECTING TO OUTDOOR CONDENSING UNIT.
5. PROVIDE RELAY FOR EACH UNIT TO INTERLOCK WITH KEY OPERATED SWITCH.
6. PROVIDE FACTORY ISOLATION DAMPERS. SUPPLY AND RETURN AIR DAMPERS MUST BE LOW LEAKAGE DAMPERS WITH A 3 CFM/SF OR LESS LEAKAGE RATE.

CONDENSING UNIT SCHEDULE

TAG	LOCATION	SERVICE	TYPE	TOTAL CAPACITY (MBH)	CONDENSER FAN			AMBIENT TEMP (°F)	REFRIGERANT	ELECTRICAL DATA					NOTES
					NO. FANS	FLA EACH	TOTAL CFM			V	PH	HZ	MCA	MOCP	
CU-1,2	ON GRADE	AHU-1,2	PROPELLER FAN	162	4	0.5	21,120	87.0°F	R-410A	480	3	60	5.1	15.0	1,2,3,4,5,6

NOTES:
1. PROVIDE SPLIT SYSTEM VARIABLE CAPACITY AIR HANDLING UNIT, WITH DX COOLING AND DEHUMIDIFICATION CONTROL.
2. PROVIDE MANUFACTURER'S FACTORY APPLIED COATING SUITABLE FOR A CORROSIVE SALT SPRAY ENVIRONMENT ON OUTDOOR EQUIPMENT CASING AND COILS.
3. PROVIDE SINGLE POINT POWER CONNECTION WITH FACTORY MOUNTED AND WIRED NON-FUSED DISCONNECT SWITCH.
4. COORDINATE INTERFACE BETWEEN INDOOR AND OUTDOOR UNITS.
5. PROVIDE COMPLETE ACCESSORIES AND APPURTENANCES FOR INSTALLING SPLIT SYSTEM.
6. PROVIDE WITH LOW AMBIENT KIT.

AIR TERMINAL SCHEDULE

TAG	TYPE	AIRFLOW RANGE (CFM)	NECK SIZE (IN)	FREE AREA (FT^2)	NOTES
SG-1	SUPPLY GRILLE	0-350	12"X6"	0.41	1
RG-1	RETURN GRILLE	0-2000	20ø	2.06	1

NOTES:
1. PROVIDE ALUMINUM GRILLES.

LOUVER SCHEDULE

TAG	SIZE		FREE AREA (FT^2)	NOTES
	WIDTH (IN)	HEIGHT (IN)		
L-1	30	30	2.98	1,2
L-2	24	24	1.77	1,3

NOTES:
1. PROVIDE HEAVY DUTY, WIND DRIVEN RAIN TYPE WITH BIRDSCREEN.
2. REFER TO A1 / S-704 FOR INTAKE LOUVER DETAILS.

UNIT HEATER SCHEDULE

TAG	LOCATION	SERVICE	TYPE	KW	CFM	EAT (°F)	LAT (°F)	MOTOR DATA						MOUNTING HEIGHT (FT)	THROW (FT)	NOTES
								HP	VOLT	PH	HZ	MCA	MOCP			
UH-1	MECHANICAL ROOM	HEATING	HORIZONTAL PROPELLER FAN	5.0	380	55.0	97.0	1/40	480	3	60	-	-	8.0	12.0	1,2

NOTES:
1. PROVIDE WITH MANUFACTURER'S INTEGRAL UNIT MOUNTED NON-FUSED DISCONNECT SWITCH, MOUNTING BRACKETS AND HARDWARE AND EPOXY COATING.
2. PROVIDE ACCESSORIES AND APPURTENANCES FOR UNIT HEATERS COMPLETE INSTALLATION.

DUCTWORK CONSTRUCTION AND LEAKAGE TESTING SCHEDULE

SYSTEM	DUCT PRESSURE CLASS			DUCTWORK				PRESSURE: INCHES OF WATER COLUMN	NOTES
	INCHES OF WATER COLUMN			ROUND / OVAL		RECTANGULAR			
	SUPPLY DUCT	RETURN DUCT	OUTSIDE AIR DUCT	DUCT SEAL CLASS	DUCT LEAK CLASS	DUCT SEAL CLASS	DUCT LEAK CLASS		
SUPPLY DUCT	1	-	-	A	4	A	8	1.0	1
RETURN DUCT	-	-1	-	A	8	A	16	1.0	1
OUTSIDE AIR DUCT	-	-	0.5	A	4	A	8	0.5	1

NOTES:
1. TEST IN ACCORDANCE WITH UFGS 23 05 93.00 22, TESTING, ADJUSTING AND BALANCING FOR HVAC AND THE PROCEDURES IN SMACNA HVAC AIR DUCT LEAKAGE TEST MANUAL.

FAN SCHEDULE

TAG	LOCATION	SERVICE	TYPE	LOW SPEED AIRFLOW (CFM)	HIGH SPEED AIRFLOW (CFM)	ESP (IN WC)	MOTOR DATA			ELECTRICAL DATA				DRIVE	VSD	NOTES
							BHP	HP	RPM	V/PH/HZ	FLA	MCA	MOP			
F-1	CLWS MECH RM	CLWS MECH RM	INLINE	400	600	0.30	0.05	0.25	1,725	208/1/60	1.7	2	15	DIRECT	YES	1,2,3,4,5

NOTES:
1. PROVIDE WITH FACTORY MOUNTED AND WIRED NON-FUSED DISCONNECT.
2. PROVIDE ELECTRONICALLY COMMUTATED MOTOR WITH THERMAL OVERLOAD PROTECTION AND SPEED CONTROL.
3. PROVIDE OSHA APPROVED FAN MOTOR GUARD.
4. PROVIDE MANUFACTURER'S FACTORY APPLIED COATING SUITABLE FOR A CORROSIVE SALT SPRAY ENVIRONMENT.
5. OUTDOOR AIR DAMPERS MUST BE LOW LEAKAGE DAMPERS WITH A 3 CFM/SF OR LESS LEAKAGE RATE.

DESIGN CONDITIONS

14th WEATHER SQUADRON STATION ID	ICAO_KGON
LOCATION	NEW LONDON, CT
ELEVATION	9 FEET
OUTDOOR DESIGN CONDITIONS	
DEHUMIDIFICATION (0.4%)	121 GR/LB (77.5°F DB / 73.5°F WB)
AIR COOLED CONDENSING UNIT	87.0°F DB
WINTER (99.6%)	10°F DB
INDOOR DESIGN SET POINTS - CLWS MAGAZINE STORAGE AREA	
COOLING	85°F
HEATING	50°F
DEHUMIDIFICATION	50% RH DEHUMIDIFICATION CONTROL
INDOOR DESIGN SET POINTS - VENTILATED MECHANICAL ROOMS	
COOLING	10°F ABOVE AMBIENT
HEATING	55°F

AIR CURTAIN SCHEDULE

TAG	LOCATION	SERVICE	AIRFLOW (CFM)	MOTOR DATA		ELECTRICAL DATA			WEIGHT (LBS)	NOTES
				# FANS (EACH)	HP (EACH)	V	PH	HZ		
DAC-1,2,3	MAGAZINE STORAGE	STORAGE DOOR CURTAIN	6,766	2.00	3/4	208	1	60	187	1,2

NOTES:
1. PROVIDE WITH FACTORY MOUNTED AND WIRED NON-FUSED DISCONNECT.
2. PROVIDE RELAY FOR EACH UNIT TO INTERLOCK WITH DOOR SWITCH AND KEY OPERATED SWITCH.

THERMOSTAT AND OCCUPANCY SCHEDULE

SYSTEM/ UNIT IDENTIFIER	SPACES SERVED	STAT LOCATION	THERMOSTAT SCHEDULE					OCCUPANCY SCHEDULE					
			ZN-T	ZN-T-SP ADJUST	UNOCC OVERRIDE PUSHBUTTON	UNOCC OVERRIDE TIME (MINS)	OCC SENSOR	OCCUPIED		UNOCCUPIED		WARM-UP/COOL-DOWN	
								MON-FRI	WEEKEND /HOLIDAY	MON-FRI	WEEKEND /HOLIDAY	MON- FRI	WEEKEND/ HOLIDAY
AHU-1	MAGAZINE STORAGE AREA	MAGAZINE STORAGE AREA	X	~	~	~	~	~	~	~	~	~	~
AHU-2	MAGAZINE STORAGE AREA	MAGAZINE STORAGE AREA	X	~	~	~	~	~	~	~	~	~	~
F-1/UH-1	MAGAZINE MECHANICAL ROOM	MAGAZINE MECHANICAL ROOM	X	~	~	~	~	~	~	~	~	~	~

NOTES:
"~" INDICATES NO ENTRY REQUIRED.

DAMPER SCHEDULE

DAMPER TAG	SYSTEM EQUIPMENT	DESCRIPTION	DESIGN DUCT SIZE		BLADE ACTION	FAIL POSITION	CONTROL ACTUATOR			NOTES
			WIDTH (INCHES)	HEIGHT (INCHES)			CONTROL SIGNAL	CONTROL VOLTAGE	POSITION FEEDBACK	
AHU-1-SA-D	AHU-1	SUPPLY AIR	12	12	PARALLEL	CLOSE	TWO POSITION	24 VAC	YES	
AHU-1-RA-D	AHU-1	RETURN AIR	58	24	PARALLEL	CLOSE	TWO POSITION	24 VAC	YES	
AHU-2-SA-D	AHU-2	SUPPLY AIR	12	12	PARALLEL	CLOSE	TWO POSITION	24 VAC	YES	
AHU-2-RA-D	AHU-2	RETURN AIR	58	24	PARALLEL	CLOSE	TWO POSITION	24 VAC	YES	
OA-D-1	F-1	OUTSIDE AIR	24	24	PARALLEL	CLOSE	TWO POSITION	24 VAC	YES	
OA-D-2	F-1	OUTSIDE AIR	24	24	PARALLEL	CLOSE	TWO POSITION	24 VAC	YES	

APPR. DATE DESCRIPTION SYM

NAVFAC

COMMONWEALTH OF VIRGINIA
CHRISTOPHER W. HILL
Lic. No. 0402055245
06/23/2025
PROFESSIONAL ENGINEER
SEAL

Jacobs
1100 NORTH GLEBE ROAD
SUITE 500
ARLINGTON, VIRGINIA 22201
571.218.1000
FAX: 571.218.1600

A/E INFO

APPROVED
FOR COMMANDER NAVFAC 8/14/2025
ACTIVITY
APPROVED BY LCDR ELIZABETH OLOKODE NAVFAC NLON FEAD DIRECTOR NEW LONDON, GROTON, CT
SATISFACTORY TO DATE 05/27/2025

DES	CWH	DRW CHW	CHK MJL
PM/DM	SMS/CWJ		
BRANCH MANAGER	ALG		
CHIEF ENG/ARCH	JWJ		
FIRE PROTECTION	HPN		

DEPARTMENT OF THE NAVY
NAVAL FACILITIES ENGINEERING SYSTEMS COMMAND
MID-ATLANTIC
NAVAL FACILITIES ENGINEERING SYSTEMS COMMAND - MID-ATLANTIC
NAVAL STATION - NORFOLK, VA
NAVAL SUBMARINE BASE NEW LONDON
GROTON, CONNECTICUT
P-1102 WEAPONS MAGAZINE & ORDNANCE OPERATIONS FACILITY
CLWS MAGAZINE
MECHANICAL SCHEDULES

SCALE: AS SHOWN
EPROJECT NO.: 1667770
CONSTR. CONTR. NO.
NAVFAC DRAWING NO. 12894290
SHEET 47 OF 77
M-601S

FILE NAME: C:\pw_workdir\dms0031\jrg_hillcw\d1509825\CLWS M-601S.dwg LAYOUT NAME: M-601 PLOTTED: Tuesday, June 17, 2025 - 1:03pm USER: HILCW

CONTROL SCHEMATIC SYMBOLS

W-X-Y-Z ##
DEVICE SYMBOL, GENERIC
USED TO REPRESENT SENSORS, INSTRUMENTS
SAFETIES, AND OTHER CONTROL DEVICES
W-X-Y-Z : (SEE ABBREVIATIONS AND ACRONYMS)
GENERIC USAGE TO SHOW LOCATION OF DEVICE;
PROCESS OR DEVICE BEING MEASURED OR
CONTROLLED; SIGNAL TYPE; MODIFIERS AND
OTHER APPLICATION INFORMATION

W-X-Y-Z ##
DEVICE SYMBOL, GENERIC
MULTIPLE OUTPUT DEVICE WHERE AT LEAST 1
OUTPUT IS ALWAYS SAFETY INTERLOCK

W-X-Y-Z
DDC ##
DIR
REV
DEVICE SYMBOL, CONTROLLER
DDC : DIRECT DIGITAL CONTROL
: DEVICE NUMBER
DIR : DIRECT CONTROL ACTION, OR
REV : REVERSE CONTROL ACTION
W-X-Y-Z : (SEE ABBREVIATIONS AND ACRONYMS)
GENERIC USAGE TO SHOW LOCATION OF DEVICE;
PROCESS OR DEVICE BEING MEASURED OR
CONTROLLED; SIGNAL TYPE; MODIFIERS AND
OTHER APPLICATION INFORMATION

ACTUATOR, ELECTRIC

AFMA
AIR FLOW MEASUREMENT ARRAY,
WITH FLOW TRANSMITTER
SEE "DEVICE SYMBOL, GENERIC"

BOILER

CHILLER

C
COIL, COOLING

DX
COIL, COOLING, DIRECT-EXPANSION

HC
COIL, HOT GAS REHEAT

H
COIL, HEATING

PH
COIL, PREHEAT

CONTACT, PRESSURE, HIGH LIMIT (HL)
SHOWN IN ACTIVATED POSITION
OPEN WHEN PRESSURE IS ABOVE SETPOINT
CLOSED WHEN PRESSURE IS BELOW SETPOINT

CONTACT, PRESSURE, HIGH LIMIT (HL)
SHOWN IN UNACTIVATED POSITION
OPEN WHEN PRESSURE IS ABOVE SETPOINT
CLOSED WHEN PRESSURE IS BELOW SETPOINT

CONTACT, PRESSURE, LOW LIMIT (LL)
SHOWN IN ACTIVATED POSITION
OPEN WHEN PRESSURE IS BELOW SETPOINT
CLOSED WHEN PRESSURE IS ABOVE SETPOINT

CONTACT, PRESSURE, LOW LIMIT (LL)
SHOWN IN UNACTIVATED POSITION
OPEN WHEN PRESSURE IS BELOW SETPOINT
CLOSED WHEN PRESSURE IS ABOVE SETPOINT

CONTACT, TEMPERATURE, HIGH LIMIT (HL)
SHOWN IN ACTIVATED POSITION
OPEN WHEN TEMPERATURE IS ABOVE SETPOINT
CLOSED WHEN TEMPERATURE IS BELOW SETPOINT

CONTACT, TEMPERATURE, HIGH LIMIT (HL)
SHOWN IN UNACTIVATED POSITION
OPEN WHEN TEMPERATURE IS ABOVE SETPOINT
CLOSED WHEN TEMPERATURE IS BELOW SETPOINT

CONTACT, TEMPERATURE, LOW LIMIT (LL)
SHOWN IN ACTIVATED POSITION
OPEN WHEN TEMPERATURE IS BELOW SETPOINT
CLOSED WHEN TEMPERATURE IS ABOVE SETPOINT

CONTACT, TEMPERATURE, LOW LIMIT (LL)
SHOWN IN UNACTIVATED POSITION
OPEN WHEN TEMPERATURE IS BELOW SETPOINT
CLOSED WHEN TEMPERATURE IS ABOVE SETPOINT

CONTROL SIGNAL LINE, LOW VOLTAGE

CURRENT TRANSFORMER/SWITCH

DAMPER, BALANCING

D-##
DAMPER, PARALLEL BLADE
NORMALLY OPEN OR CLOSED AS SHOWN
= DAMPER NUMBER AS SHOWN
IN DAMPER SCHEDULE

D-##
DAMPER, OPPOSED BLADE
NORMALLY OPEN OR CLOSED AS SHOWN
= DAMPER NUMBER AS SHOWN
IN DAMPER SCHEDULE

HEAT EXCHANGER

MAIN AIR
MAIN AIR

M#
MOTOR

MS-#
MOTOR STARTER

Rxx
RELAY COIL
xx = SEQUENTIAL RELAY
(SOLENOID) NUMBER

Rxx-YY
RELAY COIL CONTACT
NORMALLY OPEN
xx = RELAY COIL NUMBER
YY = CONTACT NUMBER

Rxx-YY
RELAY COIL CONTACT
NORMALLY CLOSED
xx = RELAY COIL NUMBER
YY = CONTACT NUMBER

FAN

FILTER

T
TEMPERATURE GAGE

P
H
L
PRESSURE SWITCH, DIFFERENTIAL, WITH GAGE
H = HIGH PRESSURE TAP
L = LOW PRESSURE TAP
SEE "DEVICE SYMBOL, GENERIC"

PUMP

RADIATOR

EPS ##
ELECTRIC-TO-PNEUMATIC SWITCH
(SOLENOID ACTUATED PNEUMATIC VALVE)
= SEQUENTIAL NUMBER
(WHEN MORE THAN 1 EPS)

EP ##
ELECTRIC-TO-PNEUMATIC TRANSDUCER
VDC OR mA INPUT / 3-15 PSI OUTPUT
= SEQUENTIAL NUMBER
(WHEN MORE THAN 1 EP)

FAN

FILTER

LDP ##
LOCAL DISPLAY PANEL
= SEQUENTIAL NUMBER
(WHEN MORE THAN 1 LDP)

PP
POSITIVE POSITIONER
SEE "ACTUATOR, PNEUMATIC"

P
PRESSURE GAGE

RST-BUT
RESET BUTTON FOR SAFETY RESET

SMOKE DETECTOR, DUCT-MOUNTED
SEE "DEVICE SYMBOL, GENERIC"

SWITCH, MANUAL

TEMPERATURE SENSOR, AVERAGING
or TEMPERATURE LOW LIMIT / FREEZESTAT
SEE "DEVICE SYMBOL, GENERIC"

TEMPERATURE SENSOR, POINT
SEE "DEVICE SYMBOL, GENERIC"

STAT
THERMOSTAT WITH SPECIFIED I/O FUNCTIONS

THERMOWELL IN PIPE

VALVE, BALANCING

V-## NC
VALVE, NORMALLY CLOSED
WITH SPRING RETURN FAILSAFE
= VALVE NUMBER AS SHOWN
IN VALVE SCHEDULE

V-## NO
VALVE, NORMALLY OPEN
WITH SPRING RETURN FAILSAFE
= VALVE NUMBER AS SHOWN
IN VALVE SCHEDULE

VFD
XX-C XX-SS XX-S
VARIABLE FREQUENCY DRIVE
XX = PROCESS/DEVICE BEING CONTROLLED

SS = START/STOP COMMAND
S = STATUS FEEDBACK (ON/OFF)
C = 4-20 mA, VDC, or SNVT CONTROL SIGNAL

ABBREVIATIONS AND ACRONYMS

2P	TWO-POSITION (CONTROL SIGNAL)
ADJ	ADJUSTABLE
AFMA	AIRFLOW MEASUREMENT ARRAY
ALM	ALARM
BA	BYPASS AIR
BLDG	BUILDING
BUT	BUTTON
C	COMMAND (MODULATING SIGNAL)
CD	COLD DECK
CF	CONDENSER FAN
CLG	COOLING
CO2	CARBON DIOXIDE
COM	COMMON
COMP	COMPRESSOR/COMPARATOR
CP	CONFIGURATION PROPERTY
CSR	CURRENT SENSING RELAY
CT	CURRENT TRANSDUCER/SWITCH
D	DAMPER
DA	DISCHARGE AIR
DB	DEADBAND/DRY BULB
DDC	DIRECT DIGITAL CONTROL(LER)
DEH	DEHUMIDIFICATION
DIFF	DIFFERENCE/DIFFERENTIAL
DIR	DIRECT (CONTROL ACTION)
DIS	DISABLE
DISP	DISPLAY
DX	DIRECT EXPANSION
EA	EXHAUST AIR
ECO	ECONOMIZER
EF	EXHAUST FAN
ENA	ENABLE
F	FLOW
FAP	FIRE ALARM PANEL
FLT	FILTER
HD	HOT DECK
HL	HIGH LIMIT
HS	HUMIDISTAT
HTG	HEATING
HUM	HUMIDIFIER
I/O	INPUT/OUTPUT
IR	INFRARED
LDP	LOCAL DISPLAY PANEL
LL	LOW LIMIT
M	MOTOR/MAIN
M&C	MONITORING & CONTROL (SOFTWARE)
MA	MIXED AIR
MINOA	MINIMUM OUTSIDE AIR
MS	MOTOR STARTER
N/A	NOT APPLICABLE
NC	NORMALLY CLOSED
NCI	NETWORK CONFIGURED INPUT
NO	NORMALLY OPEN
OA	OUTSIDE AIR
OCC	OCCUPIED
OL	OVERLOAD
OWS	OPERATOR WORKSTATION
P	PRESSURE
PH	PRE-HEAT
PID	PROPORTIONAL INTEGRAL DERIVATIVE
PMP	PUMP
PP	POSITIVE POSITIONER
R	RELAY
RA	RETURN AIR
REV	REVERSE
RF	RETURN FAN
RH	RELATIVE HUMIDITY
RLA	RELIEF AIR
RM	ROOM
RQST	REQUEST
RST	RESET
RT	RATE
RTN	RETURN
S	STATUS
SA	SUPPLY AIR
SEC	SECONDARY
SF	SUPPLY FAN
SMK	SMOKE
SNVT	STANDARD NETWORK VARIABLE TYPE
SP	SETPOINT
SS	START/STOP
STAT	THERMOSTAT
STM	STEAM
SYS	SYSTEM
SCHD	SCHEDULER
T	TEMPERATURE
TAP	TAP, PRESSURE
UNOCC	UNOCCUPIED
V	VALVE
VAV	VARIABLE AIR VOLUME
VFD	VARIABLE FREQUENCY DRIVE
WB	WET BULB
XFMR	TRANSFORMER
ZN	ZONE

SYM	DESCRIPTION	DATE	APPR

NAVFAC

COMMONWEALTH OF VIRGINIA
CHRISTOPHER W. HILL
Lic. No. 0402055245
06/23/2025
PROFESSIONAL ENGINEER
SEAL

Jacobs
1100 NORTH GLEBE ROAD
SUITE 500
ARLINGTON, VIRGINIA 22201
571.218.1000
FAX: 571.218.1600
A/E INFO

APPROVED
FOR COMMANDER NAVFAC 8/4/2025
ACTIVITY
APPROVED BY LCDR ELIZABETH
OLOKODE NAVFAC NLON FEAD
DIRECTOR NEW LONDON, GROTON, CT
SATISFACTORY TO DATE 05/27/2025

DES CWH	DRW CHW	CHK MJL	
PM/DM	SMS/CWJ		
BRANCH MANAGER	ALG		
CHIEF ENG/ARCH	JWJ		
FIRE PROTECTION	HPN		

DEPARTMENT OF THE NAVY
NAVAL FACILITIES ENGINEERING SYSTEMS COMMAND
MID-ATLANTIC
NAVAL FACILITIES ENGINEERING SYSTEMS COMMAND - MID-ATLANTIC
NAVAL STATION - NORFOLK, VA
NAVAL SUBMARINE BASE NEW LONDON
GROTON, CONNECTICUT
P-1102 WEAPONS MAGAZINE & ORDNANCE OPERATIONS FACILITY
CLWS MAGAZINE
MECHANICAL CONTROLS LEGEND

SCALE: AS SHOWN
EPROJECT NO.: 1667770
CONSTR. CONTR. NO.
NAVFAC DRAWING NO.
12894291
SHEET 48 OF 77
M-801S

FILE NAME: C:\pw_workdir\den0033\prj_hilicw\d1509825\CLWS M-801S.dwg LAYOUT NAME: Layout1 PLOTTED: Tuesday, June 17, 2025 - 1:03pm USER: HGICW

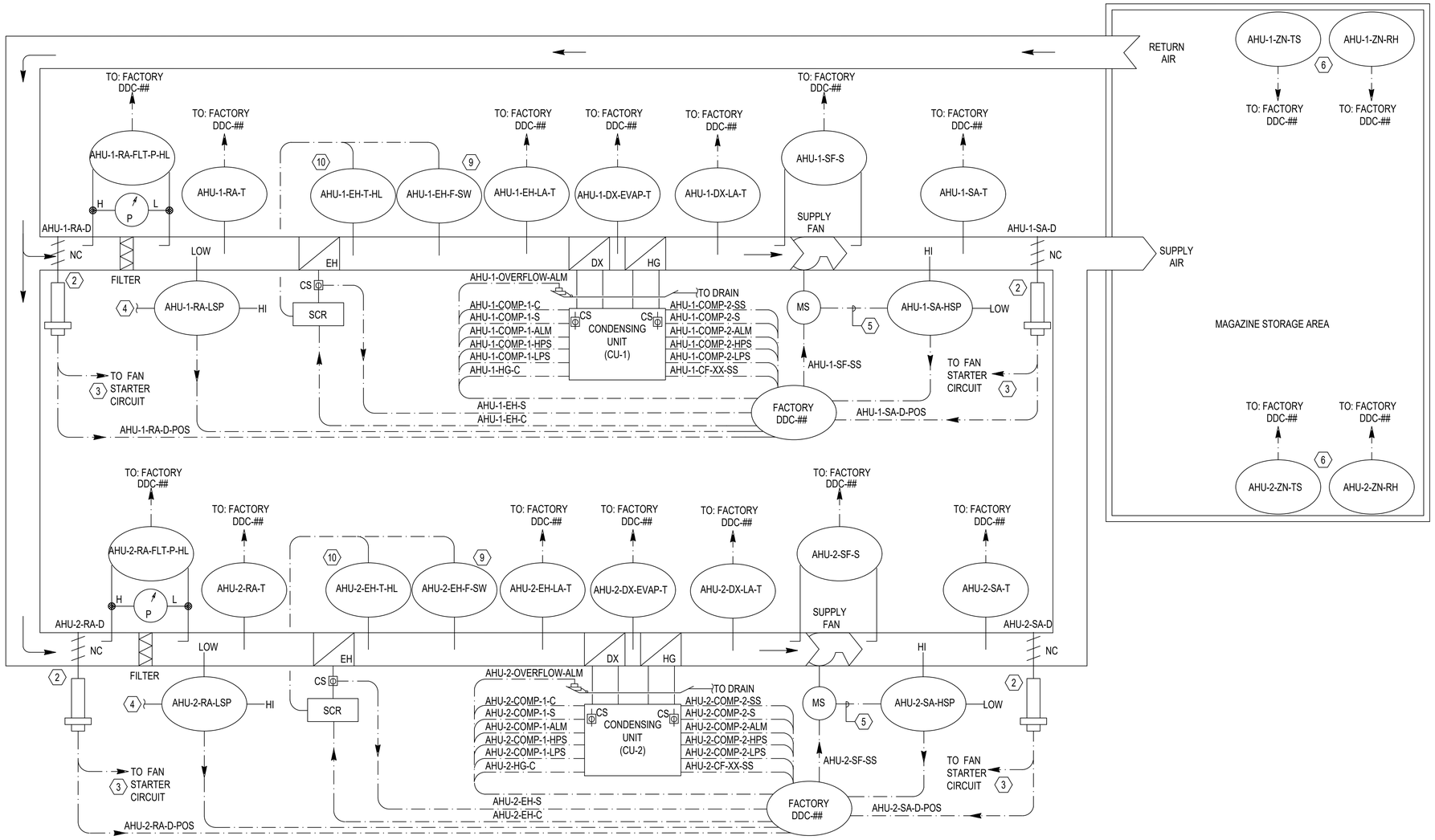

B1 AHU-1 & AHU-2 AIR HANDLING UNITS - CONTROL DIAGRAM (1)

NTS

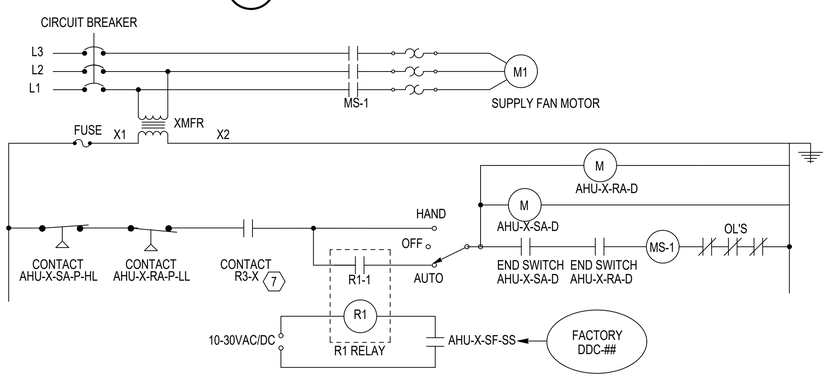

A1 AIR HANDLING UNIT (TYPICAL) - WIRING DIAGRAM (8)

NTS

GENERAL SHEET NOTES

1. REFER TO SHEET G002 FOR DRAWING INDEX.
2. REFER TO M-001 AND M-801 FOR ABBREVIATIONS, LEGEND, AND GENERAL NOTES.
3. REFER TO SHEET M-803S FOR SYSTEM (AHU-1 & AHU-2) SEQUENCES OF OPERATION.
4. REFER TO SHEET M-805S FOR SYSTEM (AHU-1 & AHU-2) POINTS SCHEDULE.

KEYNOTES

1. BACNET CONTROLLER, CONTROL DEVICES, AND SENSORS SHOWN ARE PROVIDED BY UNIT MANUFACTURER. CONNECT UNIT BACNET CONTROLLER TO THE BAS NETWORK AND AND MAP NETWORK POINTS THROUGH BAS NETWORK FOR REMOTE CONTROL AND MONITORING.
2. PROVIDE LOW LEAKAGE AIR DAMPER TO PREVENT ANY AIR BYPASS THROUGH THE UNIT THAT IS NOT OPERATING.
3. PROVIDE INTERLOCK WIRING BETWEEN SUPPLY FAN AND ASSOCIATED ISOLATION DAMPERS. WHEN SUPPLY FAN IS COMMANDED TO START, THE ISOLATION DAMPERS MUST OPEN. ONCE THE DAMPERS ARE PROVEN OPEN BY DAMPER LIMIT SWITCHES, THE SUPPLY FAN MUST START. FAN MUST STOP IF ANY ISOLATION DAMPER CLOSES.
4. PROVIDE HARDWIRE INTERLOCK BETWEEN SUPPLY FAN AND DUCT LOW PRESSURE SWITCH. IF SWITCH IS ACTIVATED ON A LOW DUCT PRESSURE CONDITION, FAN MUST BE DISABLED.
5. PROVIDE HARDWIRE INTERLOCK BETWEEN SUPPLY FAN AND DUCT HIGH PRESSURE SWITCH. IF SWITCH IS ACTIVATED ON A HIGH DUCT PRESSURE CONDITION, FAN MUST BE DISABLED.
6. SPACE TEMPERATURE AND HUMIDITY SENSORS ARE PROVIDED BY UNIT MANUFACTURER FOR INSTALLATION IN FIELD. INSTALL AND CONNECT SENSORS IN ACCORDANCE WITH REQUIREMENTS AND INSTRUCTIONS PROVIDED BY UNIT MANUFACTURER. SEE MECHANICAL FLOOR PLAN M-101S FOR LOCATIONS OF SPACE TEMPERATURE AND HUMIDITY SENSORS.
7. REFER TO DETAIL A2 ON M-803S SHEET FOR ADDITIONAL INFORMATION.
8. THE WIRING DIAGRAM IS SHOWN/PROVIDED AS A GUIDE TO THE CONTROLS CONTRACTOR. THE CONTROLS CONTRACTOR MUST DEVELOP THE WIRING DIAGRAM TO BE PROJECT SPECIFIC AND CONSISTENT WITH THE PROJECT SUBMITTALS.
9. INTERLOCK ELECTRIC HEATER WITH AIR FLOW SWITCH. WHEN AIR FLOW SWITCH INDICATES THAT THERE IS NO AIR FLOW, ELECTRIC HEATER MUST BE DISABLED. THE AIRFLOW SWITCH MUST BE PROVIDED WITH THE ELECTRIC HEATER.
10. INTERLOCK ELECTRIC HEATER WITH TEMPERATURE LIMIT SWITCH. WHEN TEMPERATURE LIMIT SWITCH DETECTS TEMPERATURE GREATER THAN CUTOUT POINT SET BY UNIT MANUFACTURER, ELECTRIC HEATER MUST BE DISABLED. THE TEMPERATURE LIMIT SWITCH MUST BE PROVIDED WITH THE ELECTRIC HEATER.

SYM	DESCRIPTION	DATE	APPR.

NAVFAC

COMMONWEALTH OF VIRGINIA
CHRISTOPHER W. HILL
Lic. No. 0402055245
06/23/2025
PROFESSIONAL ENGINEER
SEAL

Jacobs
1100 NORTH GLEBE ROAD
SUITE 500
ARLINGTON, VIRGINIA 22201
571.218.1000
FAX: 571.218.1600
A/E INFO

APPROVED
FOR COMMANDER NAVFAC 8/14/2025

ACTIVITY
APPROVED BY LCDR ELIZABETH OLOKODE NAVFAC NLON FEAD DIRECTOR NEW LONDON, GROTON, CT
SATISFACTORY TO DATE 05/27/2025

DES	CWH	DRW	CHW	CHK	MJL
PM/DM	SMS/CWJ				
BRANCH MANAGER	ALG				
CHIEF ENG/ARCH	JWJ				
FIRE PROTECTION	HPN				

DEPARTMENT OF THE NAVY
NAVAL FACILITIES ENGINEERING SYSTEMS COMMAND
MID-ATLANTIC
NAVAL FACILITIES ENGINEERING SYSTEMS COMMAND - MID-ATLANTIC
NAVAL STATION - NORFOLK, VA
NAVAL SUBMARINE BASE NEW LONDON
GROTON, CONNECTICUT
P-1102 WEAPONS MAGAZINE & ORDNANCE OPERATIONS FACILITY
CLWS MAGAZINE
MECHANICAL CONTROLS DIAGRAMS & SEQUENCES

SCALE: AS SHOWN
EPROJECT NO.: 1667770
CONSTR. CONTR. NO.
NAVFAC DRAWING NO. 12894292
SHEET 49 OF 77
M-802S

FILE NAME: C:\pw_workdir\dms003\jeg_billcw\d1509825\CLWS M-802S.dwg LAYOUT NAME: Layout1 PLOTTED: Tuesday, June 17, 2025 - 1:03pm USER: HILCW

AHU-1 & AHU-2 SEQUENCES OF OPERATION

GENERAL:
1. EACH AIR HANDLING UNIT MUST BE CONTROLLED BY A BACNET-COMPATIBLE UNIT CONTROLLER PROVIDED BY THE UNIT MANUFACTURER. THE UNIT MUST BE DIRECTLY CONNECTED TO THE BAS NETWORK USING BACNET MS/TP AND COMMUNICATE WITH THE BAS. THE CONTROLS CONTRACTOR MUST COORDINATE WITH UNIT PROVIDER AND PROVIDE NECESSARY CONTROL POINT MAPPING AND SOFTWARE MODIFICATION TO THE BAS FOR REMOTE CONTROL AND MONITORING OF THE UNIT. REFER TO POINT SCHEDULE FOR A LIST OF CONTROL AND MONITORING POINTS THAT MUST BE INCORPORATED INTO THE BAS.
2. PROGRAM AN ADJUSTABLE SOFTWARE TIME DELAY INTO THE UNIT CONTROLLER TO STAGGER THE RESTART OF UNIT AFTER A POWER FAILURE TO ASSURE THE GENERATOR IS NOT OVERLOADED WHEN IT RUNS AFTER A POWER FAILURE. A TIME DELAY OF 10 SECONDS (ADJUSTABLE) BETWEEN EACH CLWS SYSTEM MUST BE USED BY BAS FOR A STAGGERED RESTARTING OF THE UNITS.
3. A KEY OPERATED SWITCH MUST BE PROVIDED IN THE MAGAZINE STORAGE AREA AND INTERLOCKED WITH AIR HANDLING UNITS. WHEN KEY OPERATED SWITCH IS OFF, AIR HANDLING UNITS MUST BE DE-ENERGIZED. WHEN KEY OPERATED SWITCH IS ON, AIR HANDLING UNITS MUST OPERATE AS DESCRIBED BELOW.

UNIT LEAD/STAND-BY OPERATION:
1. ONE UNIT MUST SERVE AS THE LEAD UNIT AND THE OTHER UNIT MUST SERVE AS STANDBY UNIT, WHICH MUST BE TURNED ON AUTOMATICALLY IN THE EVENT OF A FAILURE OF THE LEAD UNIT.
2. IF THE LEAD AHU STOPS DURING NORMAL OPERATION, A CRITICAL ALARM CONDITION MUST BE REPORTED TO THE BAS AND THE STAND-BY UNIT MUST BE STARTED BY BAS.
3. THE STANDBY UNIT MUST BE STARTED AFTER THE LEAD UNIT IS STOPPED AND ASSOCIATED SUPPLY AND RETURN AIR ISOLATION DAMPERS ARE PROVEN CLOSED BY THEIR POSITION SWITCHES.

UNIT LEAD/STAND-BY ROTATION:
1. PROVIDE AN AUTOMATIC PROGRAM TO ALTERNATE THE LEAD AND STANDBY UNITS WEEKLY TO MAINTAIN EVEN USE OF THE UNITS.
2. IT MUST BE POSSIBLE FOR FACILITY MAINTENANCE PERSONNEL TO SELECT THE LEAD AND STANDBY UNITS THROUGH THE ASSOCIATED GRAPHICAL DISPLAYS OF THE OPERATOR'S WORKSTATION.
3. WHEN SWITCHING THE LEAD AND STANDBY UNITS, THE STANDBY UNIT MUST BE STARTED AFTER THE LEAD UNIT IS STOPPED AND ASSOCIATED SUPPLY AND RETURN AIR ISOLATION DAMPERS ARE PROVEN CLOSED BY THEIR POSITION SWITCHES.
4. WHEN AHU ROTATION HAS BEEN COMPLETED, THE BAS MUST RESET THE DESIGNATION OF AHUs IN THE ROTATION SEQUENCE.

RUN CONDITIONS:
AIR HANDLING UNITS MUST BE ENABLED BY BAS AND LEAD UNIT MUST OPERATE CONTINUOUSLY, 24 HOURS A DAY, YEAR-ROUND AS DESCRIBED BELOW.

UNIT FAN START/STOP CONTROL:
1. TO START THE UNIT, THE BAS MUST SEND A START SIGNAL TO THE UNIT CONTROLLER, WHICH MUST OPEN THE SUPPLY AND RETURN AIR ISOLATION DAMPERS. WHEN THE DAMPERS ARE FULLY OPEN, AS SENSED BY DAMPER POSITION SWITCHES, THE SUPPLY FAN MUST BE START THROUGH A HARD-WIRED INTERLOCK WITH THE DAMPER POSITION SWITCHES.
2. TO STOP THE UNIT, THE BAS MUST SEND A STOP COMMAND TO THE UNIT CONTROLLER, WHICH MUST CLOSED THE ASSOCIATED SUPPLY AND RETURN AIR ISOLATION DAMPERS AND STOP THE SUPPLY FAN.

SPACE TEMPERATURE CONTROL:
1. THE SIGNALS FROM THE LOCAL SPACE TEMPERATURE SENSORS MUST BE PASSED FROM THEIR RESPECTIVE CONTROLLER TO THE BAS FOR SPACE TEMPERATURE CONTROL. THE SPACE TEMPERATURE HEATING SET POINT MUST BE INITIALLY SET AT 50°F (ADJ.) AND THE SPACE TEMPERATURE COOLING SET POINT MUST BE INITIALLY SET AT 85°F (ADJ.).
2. HEATING CONTROL: UNIT IS EQUIPPED WITH A SILICON CONTROLLED RECTIFIER (SCR) ELECTRIC COIL. WHEN THE SUPPLY FAN IS OFF, THE PREHEAT ELECTRIC COIL MUST BE DISABLED. WHEN THE SUPPLY FAN IS ON, THE PREHEAT ELECTRIC COIL MUST BE CONTROLLED AS DESCRIBED BELOW.
   - 2.1. WHEN THE AVERAGE SPACE TEMPERATURE DROPS BELOW SPACE TEMPERATURE HEATING SET POINT, THE LEAD UNIT CONTROLLER MUST MODULATE THE PREHEAT ELECTRIC COIL VIA SCR CONTROL TO MAINTAIN THE SPACE TEMPERATURE AT THE SPACE TEMPERATURE HEATING SET POINT.
   - 2.2. WHEN THE AVERAGE SPACE TEMPERATURE IS ABOVE SPACE TEMPERATURE HEATING SET POINT, THE PREHEAT ELECTRIC COIL MUST BE DISABLED.
3. COOLING CONTROL: UNIT IS EQUIPPED WITH TWO COMPRESSORS, ONE VARIABLE CAPACITY COMPRESSOR (VCC) AND ONE FIXED CAPACITY COMPRESSOR (FCC). WHEN THE SUPPLY FAN IS OFF, THE COMPRESSORS MUST BE DISABLED. WHEN THE SUPPLY FAN IS ON, THE COMPRESSORS MUST BE CONTROLLED AS DESCRIBED BELOW.
   - 3.1. COOLING LOADING:
     - 3.1.1. WHEN THE AVERAGE SPACE TEMPERATURE RISES ABOVE SPACE TEMPERATURE COOLING SET POINT, THE UNIT CONTROLLER MUST ENABLE AND MODULATE THE VCC TO MAINTAIN THE SPACE TEMPERATURE AT THE SET POINT. IF AVERAGE SPACE TEMPERATURE IS ABOVE SET POINT AND THE VCC IS AT 100% CAPACITY FOR CERTAIN PERIOD OF TIME, THE UNIT CONTROLLER MUST ENABLE THE FCC AND MODULATE THE VCC DOWN AS NEEDED TO MAINTAIN THE SPACE TEMPERATURE AT THE SET POINT.
     - 3.1.2. FOR COMPRESSORS TO STAGE ON, MINIMUM OFF TIMES (ADJ.) MUST BE SATISFIED AS WELL AS STAGE UP DELAYS (ADJ.).
   - 3.2. COOLING UNLOADING:
     - 3.2.1. IF THE AVERAGE SPACE TEMPERATURE IS BELOW SET POINT AND THE VCC STAYS AT 0% CAPACITY FOR CERTAIN PERIOD OF TIME, WHILE THE FCC IS ENABLED, THE UNIT CONTROLLER MUST DISABLE THE FCC AND MODULATE THE VCC TO MAINTAIN THE SPACE TEMPERATURE AT THE SET POINT.
     - 3.2.2. FOR COMPRESSORS TO STAGE DOWN, MINIMUM RUN TIMES (ADJ.) MUST BE SATISFIED AS WELL AS STAGE DOWN DELAYS (ADJ.). THE VCC IS ALWAYS THE LAST COMPRESSOR TO BE DEACTIVATED.

SPACE HUMIDITY CONTROL:
1. THE SIGNALS FROM THE LOCAL SPACE HUMIDITY SENSORS MUST BE PASSED FROM THEIR RESPECTIVE CONTROLLER TO THE BAS FOR SPACE HUMIDITY CONTROL. THE SPACE HUMIDITY SET POINT MUST BE INITIALLY SET AT 50 %RH (ADJ.).
2. WHEN THE AVERAGE SPACE HUMIDITY RISES ABOVE SPACE HUMIDITY SET POINT, THE UNIT CONTROLLER MUST PLACE THE UNIT IN THE DEHUMIDIFICATION MODE OF OPERATION. WHEN DEHUMIDIFICATION MODE IS ACTIVATED, THE UNIT CONTROLLER MUST MAINTAIN THE EVAPORATOR COIL SUCTION TEMPERATURE AT THE COIL SUCTION TEMPERATURE SET POINT (PROVIDED BY UNIT'S MANUFACTURER) BY MODULATING THE VCC. IF ADDITIONAL DEHUMIDIFICATION IS REQUIRED, FCC MUST BE STAGED ON. DURING THIS MODE, THE HOT GAS REHEAT COIL MUST REHEAT THE AIR TO 69 °F (ADJ.) TO AVOID SPACE OVERCOOLING.
3. WHEN THE AVERAGE SPACE HUMIDITY FALLS BELOW THE SET POINT MINUS 3% RH (ADJ.), CONTROL OF THE SPACE TEMPERATURE MUST RETURN TO NORMAL OPERATION.

SAFETIES AND ALARMS:
1. HIGH STATIC PRESSURE ALARM: WHEN A HIGH DUCT PRESSURE IS SENSED BY THE DUCT STATIC PRESSURE SWITCH, THE UNIT SUPPLY FAN MUST BE STOPPED AND A CRITICAL ALARM SIGNAL MUST BE SENT TO THE UNIT CONTROLLER AND THE BAS. THE DUCT PRESSURE SWITCH MUST BE SET AT 2" (MANUALLY ADJUSTABLE) AND MUST BE MANUALLY RESET AT THE SWITCH.
2. LOW STATIC PRESSURE ALARM: WHEN A LOW DUCT PRESSURE IS SENSED BY THE DUCT STATIC PRESSURE SWITCH ON THE FAN SUCTION, THE UNIT SUPPLY FAN MUST BE STOPPED AND A CRITICAL ALARM SIGNAL MUST BE SENT TO THE UNIT CONTROLLER AND THE BAS. THE DUCT PRESSURE SWITCH MUST BE SET AT -2" (MANUALLY ADJUSTABLE) AND MUST BE MANUALLY RESET AT THE SWITCH.
3. FAN FAILURE: AN AIRFLOW SWITCH MUST BE USED TO MONITOR THE STATUS OF THE FAN AND SEND A STATUS SIGNAL TO THE UNIT CONTROLLER WHEN THE FAN IS RUNNING. IF UPON INITIAL START-UP, OR ONCE THE FAN HAS BEEN RUNNING, THE SUPPLY FAN DOES NOT PROVIDE A "FAN RUNNING" STATUS AFTER A 120 SECOND (ADJUSTABLE) TIME DELAY, A FAN FAILURE ALARM MUST ISSUED AT THE BAS AND THE FAN START COMMAND MUST BE CANCELED.
4. ELECTRIC PREHEAT COIL:
   - 4.1. ELECTRIC COIL ALARM: A CURRENT SENSOR MUST BE USED TO MONITOR THE STATUS OF ELECTRIC COIL WHEN THE COIL IS ENABLED. IF NO STATUS IS INDICATED FOR THE ELECTRIC COIL AFTER A 60 SECONDS (ADJUSTABLE) TIME DELAY, A CRITICAL ALARM MUST BE SENT TO THE BAS AND THE ELECTRIC COIL MUST BE DISABLED.
   - 4.2. AIRFLOW LIMIT: ELECTRIC HEATING COIL MUST BE HARD WIRE INTERLOCKED WITH AN AIRFLOW SWITCH, WHICH MUST DISABLE HEATING IF NO AIRFLOW IS PRESENT.
   - 4.3. HIGH TEMPERATURE LIMIT: ELECTRIC HEAT COIL MUST BE HARDWIRE INTERLOCKED WITH A HEATER HIGH TEMPERATURE SWITCH WHICH MUST DISABLE THE ELECTRIC HEAT COIL IF TEMPERATURE RISES ABOVE THE CUTOUT POINT SET BY UNIT MANUFACTURER.
5. DX COIL:
   - 5.1. COMPRESSOR ALARM: A CURRENT SENSOR MUST BE USED TO MONITOR THE STATUS OF EACH COMPRESSOR WHEN THE COMPRESSOR IS ENABLED. IF NO STATUS IS INDICATED FOR THE COMPRESSOR AFTER A 60 SECONDS (ADJUSTABLE) TIME DELAY, A CRITICAL ALARM MUST BE SENT TO THE BAS AND THE COMPRESSOR MUST BE DISABLED.
   - 5.2. COMPRESSOR HIGH AND LOW PRESSURE: EACH COMPRESSOR MUST BE PROTECTED BY HIGH AND LOW PRESSURE CUTOUT SWITCHES. IF LOW OR HIGH PRESSURE SWITCH IS ACTIVATED ON A LOW OR HIGH REFRIGERANT PRESSURE CONDITION, THE COMPRESSOR MUST BE DISABLED.
6. DRAIN PAN OVERFLOW ALARM: THE UNIT CONTROLLER MUST MONITOR THE DRAIN PAN OVERFLOW SWITCH LOCATED ON THE DRIP PAN. WHEN OVERFLOW SWITCH IS ACTIVATED, A CRITICAL ALARM MUST BE ISSUED AT THE UNIT CONTROLLER AND THE UNIT MUST BE SHUTDOWN.
7. DIRTY FILTER ALARM: DIFFERENTIAL PRESSURE SWITCH MUST MONITOR THE PRESSURE DROP AT THE FILTER. WHEN THE PRESSURE EXCEEDS AN ADJUSTABLE LIMIT, AN ALARM SIGNAL MUST BE SENT TO THE UNIT CONTROLLER AND THE BAS.
8. SPACE TEMPERATURE ALARM: A CRITICAL ALARM MUST BE ANNUNCIATED TO THE BAS IN THE EVENT THAT SPACE TEMPERATURE DROPS 5 °F (ADJUSTABLE) BELOW HEATING SET POINT OR RISES 5 °F (ADJUSTABLE) ABOVE COOLING SET POINT.
9. SPACE HUMIDITY ALARM: A CRITICAL ALARM MUST BE ANNUNCIATED TO THE BAS IN THE EVENT THAT SPACE HUMIDITY IS MORE THAN 5 %RH (ADJUSTABLE) ABOVE HUMIDITY SET POINT.

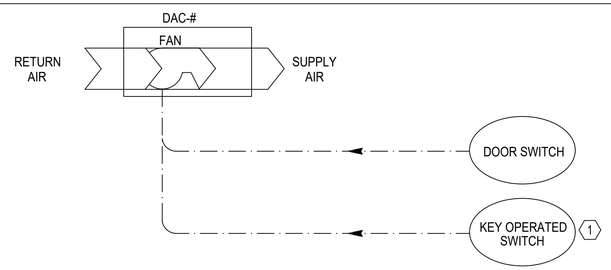

A1 DOOR AIR CURTAIN (TYPICAL) - CONTROL DIAGRAM
NTS

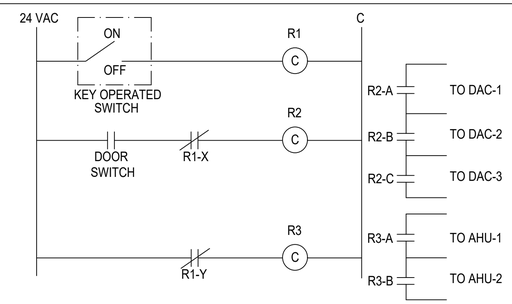

A2 AHU/DAC/KEY SWITCH WIRING DIAGRAM 2 3
NTS

DAC SEQUENCE OF OPERATION

GENERAL: DOOR AIR CURTAINS MUST BE INTERLOCKED WITH MAGAZINE LOADING DOOR OPERATION AND TWO-POSITION KEY CONTROL STATION AS DESCRIBED BELOW.

MAGAZINE LOADING DOOR INTERLOCK:
1. WHEN DOOR SWITCH IS ACTIVATED (DOOR IS IN OPEN POSITION), THE DOOR AIR CURTAIN FANS MUST BE ENERGIZED.
2. WHEN THE DOOR SWITCH IS NOT ACTIVATED (DOOR IS IN CLOSED POSITION), THE DOOR AIR CURTAIN FANS MUST BE DE-ENERGIZED.

KEY OPERATED SWITCH INTERLOCK:
1. WHEN KEY OPERATED SWITCH IS ON, THE DOOR AIR CURTAIN FANS MUST BE CONTROLLED AS DESCRIBED UNDER "MAGAZINE LOADING DOOR INTERLOCK".
2. WHEN KEY OPERATED SWITCH IS OFF, THE DOOR AIR CURTAIN FANS MUST BE DE-ENERGIZED.

GENERAL SHEET NOTES

1. REFER TO SHEET G002 FOR DRAWING INDEX.
2. REFER TO M-001 AND M-801 FOR ABBREVIATIONS, LEGEND, AND GENERAL NOTES.
3. REFER TO SHEET M-802S FOR SYSTEM (AHU-1 & AHU-2) CONTROL DIAGRAM.

KEYNOTES

1. REFER TO MECHANICAL FLOOR PLAN ON M-101S FOR KEY OPERATED SWITCH'S LOCATION.
2. PROVIDE WIRING, STEP-DOWN TRANSFORMER AND RELAYS FOR CONTROL OF EQUIPMENT. R1 & R3 - DOUBLE POLE DOUBLE THROW (DPDT) RELAY WITH 24 VAC COIL VOLTAGE. R2 - TRIPLE POLE DOUBLE THROW (3PDT) RELAY WITH 24 VAC COIL VOLTAGE. X & Y REPRESENT RELAY NORMALLY CLOSED CONTACTS. A, B & C REPRESENT RELAY NORMALLY OPEN CONTACTS.
3. THE WIRING DIAGRAM IS SHOWN/PROVIDED AS A GUIDE TO THE CONTROLS CONTRACTOR. THE CONTROLS CONTRACTOR MUST DEVELOP THE WIRING DIAGRAM TO BE PROJECT SPECIFIC AND CONSISTENT WITH THE PROJECT SUBMITTALS.

SYM	DESCRIPTION	DATE	APPR.

NAVFAC

COMMONWEALTH OF VIRGINIA
CHRISTOPHER W. HILL
Lic. No. 0402055245
06/23/2025
PROFESSIONAL ENGINEER
SEAL

Jacobs
1100 NORTH GLEBE ROAD
SUITE 500
ARLINGTON, VIRGINIA 22201
571.218.1000
FAX: 571.218.1600

A/E INFO

APPROVED
FOR COMMANDER NAVFAC 8/14/2025

ACTIVITY
APPROVED BY LCDR ELIZABETH OLOKODE NAVFAC NLON FEAD DIRECTOR NEW LONDON, GROTON, CT
SATISFACTORY TO DATE 05/27/2025

DES	CWH	DRW	CHW	CHK	MJL
PM/DM	SMS/CWJ				
BRANCH MANAGER	ALG				
CHIEF ENG/ARCH	JWJ				
FIRE PROTECTION	HPN				

DEPARTMENT OF THE NAVY
NAVAL FACILITIES ENGINEERING SYSTEMS COMMAND - MID-ATLANTIC
MID-ATLANTIC
NAVAL FACILITIES ENGINEERING SYSTEMS COMMAND
NAVAL STATION - NORFOLK, VA
NAVAL SUBMARINE BASE NEW LONDON
GROTON, CONNECTICUT
P-1102 WEAPONS MAGAZINE & ORDNANCE OPERATIONS FACILITY
CLWS MAGAZINE
MECHANICAL CONTROLS DIAGRAMS & SEQUENCES

SCALE: AS SHOWN
EPROJECT NO.: 1667770
CONSTR. CONTR. NO.
NAVFAC DRAWING NO. 12894293
SHEET 50 OF 77
M-803S

FILE NAME: C:\pw_workdir\pw003\jeng_billcw\d1509825\CLWS M-803S.dwg LAYOUT NAME: Layout1 PLOTTED: Tuesday, June 17, 2025 - 1:04pm USER: HGCW

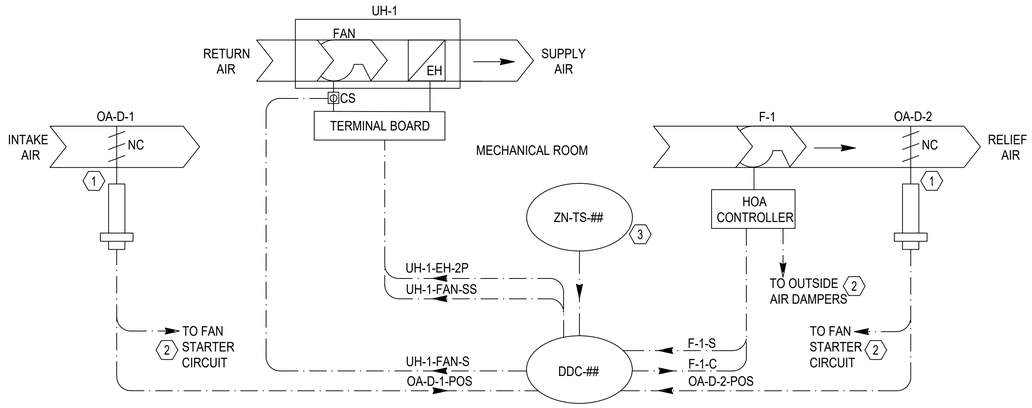

C1 F-1 FAN AND UH-1 UNIT HEATER - CONTROL DIAGRAM
NTS

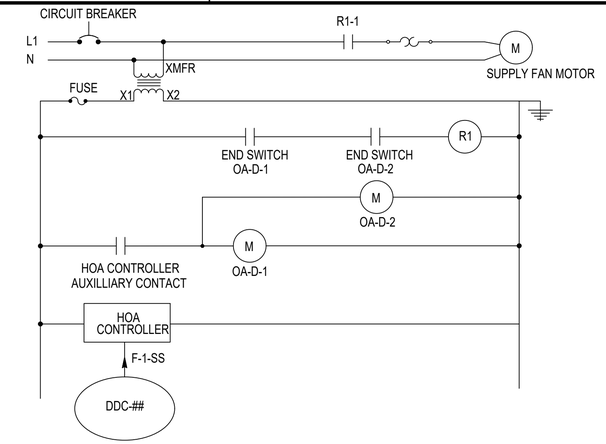

C3 F-1 FAN - CONTROL DIAGRAM 4
NTS

F-1 FAN AND UH-1 UNIT HEATER SEQUENCE OF OPERATION

GENERAL: THE F-1 FAN IS CONTROLLED BY THE BAS AS DESCRIBED BELOW.

FAN OPERATION: FAN HAND-OFF-AUTO OPERATION: A HAND-OFF-AUTO (HOA) CONTROLLER IS PROVIDED WITH ELECTRONICALLY COMMUTATED MOTOR (ECM). IN THE OFF MODE, THE OUTSIDE AIR INTAKE DAMPERS MUST BE CLOSED AND THE FAN MUST BE STOPPED. IN THE HAND MODE, THE OUTSIDE AIR INTAKE DAMPERS MUST OPEN. WHEN OUTSIDE AIR INTAKE DAMPERS ARE FULLY OPEN, THE ASSOCIATED DAMPER POSITION SWITCHES MUST START THE FAN. THE FAN MUST RUN AT THE SPEED SET POINT MANUALLY SET AT HOA CONTROLLER. IN THE AUTO MODE, THE FAN MUST BE CONTROLLED BY THE BAS AS DESCRIBED BELOW.

AUTOMATIC MODE START/STOP CONTROL:

1. FAN START/STOP: THE BAS MUST START AND STOP THE FAN BASED ON SPACE TEMPERATURE. WHEN THE SPACE TEMPERATURE EXCEEDS THE SPACE TEMPERATURE SET POINT, THE BAS MUST SEND A START SIGNAL TO THE FAN HOA CONTROLLER. THIS MUST ENABLE THE HARD WIRE INTERLOCK THAT OPENS THE OUTSIDE AIR INTAKE DAMPERS. WHEN THE DAMPERS ARE FULLY OPENED, AS SENSED BY THE DAMPER POSITION SWITCHES, THE FAN MUST BE ENERGIZED THROUGH THE HARD WIRE INTERLOCK AND RUN AS DESCRIBED BELOW.
2. FAN LOW SPEED CONTROL: WHEN THE SPACE TEMPERATURE RISES ABOVE 80 °F (ADJ.), THE BAS MUST SEND A SIGNAL TO THE ECM FAN WHICH MUST START THE FAN AND IT MUST OPERATE CONTINUOUSLY AT LOW SPEED. WHEN THE SPACE TEMPERATURE DROPS BELOW SPACE TEMPERATURE SET POINT, THE BAS MUST SEND A STOP SIGNAL TO THE FAN HOA CONTROLLER, WHICH DE-ENERGIZES THE FAN AND CLOSE THE DAMPERS.
3. FAN HIGH SPEED CONTROL: WHEN THE SPACE TEMPERATURE RISES ABOVE 100 °F (ADJ.), WHILE THE FAN IS RUNNING AT LOW SPEED, THE BAS MUST RUN THE FAN AT HIGH SPEED. WHEN THE SPACE TEMPERATURE DROPS BELOW THE SET POINT, THE REVERSE OCCURS.

FAN PROOF: THE RUN STATUS FROM FAN HOA CONTROLLER MUST BE USED TO MONITOR THE STATUS OF THE FAN. IF THE STATUS INDICATED DOES NOT MATCH THE COMMANDED OUTPUT FOR THE FAN AFTER A 120 SECONDS (ADJ.) TIME DELAY, AN ALARM MUST BE GENERATED AND SENT TO THE BAS, AND THE FAN START COMMAND MUST BE CANCELED.

GENERAL: THE UH-1 UNIT HEATER (UH) IS CONTROLLED BY THE BAS AS DESCRIBED BELOW.

UNIT HEATER CONTROL:

1. WHEN THE SPACE TEMPERATURE FALLS BELOW THE TEMPERATURE SET POINT, INITIALLY SET AT 55 DEGREES F (ADJ.), THE BAS MUST START THE UNIT HEATER FAN AND ENABLE THE ELECTRIC HEATING COIL TO MAINTAIN THE SPACE TEMPERATURE SET POINT. THE ELECTRIC HEATING COIL MUST NOT BE ENABLED UNTIL THE FAN OPERATION HAS BEEN PROVED.
2. WHEN THE SPACE TEMPERATURE RISES ABOVE SPACE TEMPERATURE SET POINT, THE BAS MUST DISABLE THE ELECTRIC HEATING COIL AND STOP UNIT HEATER FAN.

FAN PROOF: A CURRENT SWITCH MUST BE USED TO MONITOR THE STATUS OF THE FAN AND SEND A STATUS SIGNAL TO THE BAS WHEN THE FAN IS RUNNING. IF THE STATUS INDICATED DOES NOT MATCH THE COMMANDED OUTPUT FOR THE FAN, AFTER A 30 SECONDS (ADJ.) TIME DELAY, A FAN FAILURE ALARM MUST BE SENT TO THE BAS, AND THE FAN START COMMAND MUST BE CANCELED.

SPACE TEMPERATURE ALARM: A CRITICAL ALARM MUST BE ANNUNCIATED TO THE BAS IN THE EVENT THAT SPACE TEMPERATURE DROPS BELOW 50 °F (ADJ.) OR RISES ABOVE 105 °F (ADJ.).

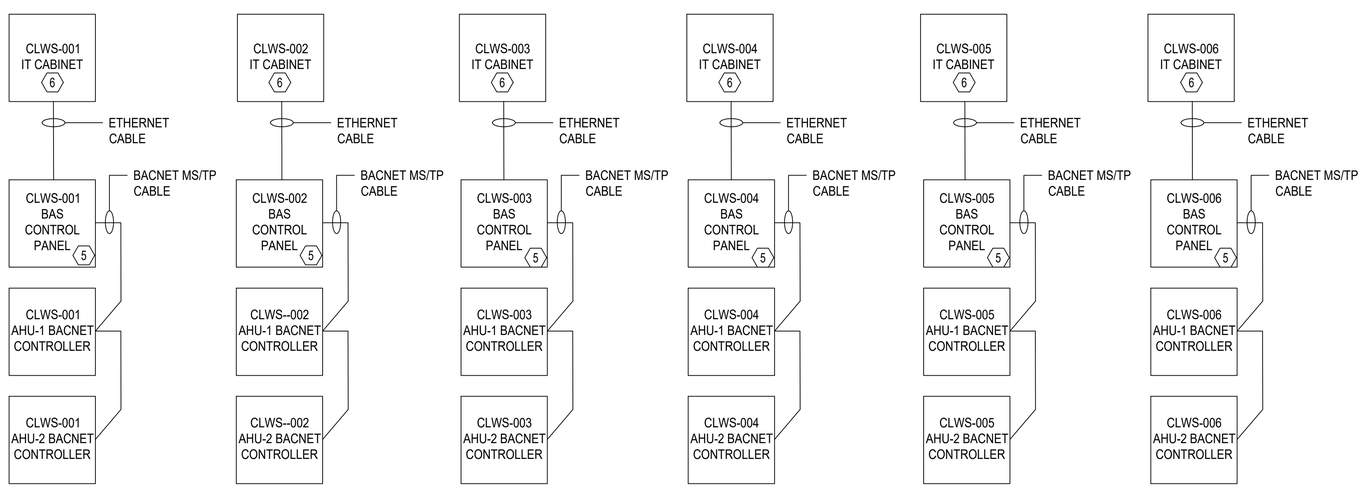

A2 BAS NETWORK RISER DIAGRAM 7
NTS

GENERAL SHEET NOTES

1. REFER TO SHEET G002 FOR DRAWING INDEX.
2. REFER TO M-001 AND M-801 FOR ABBREVIATIONS, LEGEND, AND GENERAL NOTES.
3. REFER TO SHEET M-806S FOR SYSTEM (F-1 & UH-1) POINTS SCHEDULE.

KEYNOTES

1. PROVIDE LOW LEAKAGE AIR DAMPER FOR OUTSIDE AIR INTAKE DAMPERS.
2. PROVIDE INTERLOCK WIRING BETWEEN FAN AND OUTSIDE AIR INTAKE DAMPERS. WHEN FAN IS COMMANDED TO START IN EITHER HAND OR AUTO MODE, THE DAMPERS MUST OPEN. ONCE THE DAMPERS ARE PROVEN OPEN BY DAMPER LIMIT SWITCHES, THE FAN MUST START. THE FAN MUST STOP IF ANY DAMPER CLOSES.
3. PROVIDE SPACE TEMPERATURE SENSOR FOR ROOM TEMPERATURE CONTROL AND ALARM. REFER TO MECHANICAL FLOOR PLAN FOR SPACE TEMPERATURE SENSOR'S LOCATION.
4. THE WIRING DIAGRAM IS SHOWN/PROVIDED AS A GUIDE TO THE CONTROLS CONTRACTOR. THE CONTROLS CONTRACTOR MUST DEVELOP THE WIRING DIAGRAM TO BE PROJECT SPECIFIC AND CONSISTENT WITH THE PROJECT SUBMITTALS.
5. PROVIDE BUILDING NETWORK CONTROLLER TO SERVE AS BUILDING POINT OF CONTACT TO CONNECT LOCAL BAS TO BASE-WIDE UMCS. REFER TO M-401S SHEET FOR PANEL'S LOCATION.
6. REFER TO TELECOMMUNICATIONS DRAWINGS FOR IT CABINET'S LOCATION.
7. THE INTENT OF THE DIAGRAM IS TO DEFINE NETWORK COMMUNICATION. THIS DIAGRAM IS NOT INTENDED TO DEFINE ALL HARDWARE AND NETWORK REQUIREMENTS.

SYM	DESCRIPTION	DATE	APPR.

NAVFAC

COMMONWEALTH OF VIRGINIA
CHRISTOPHER W. HILL
Lic. No. 0402055245
06/23/2025
PROFESSIONAL ENGINEER
SEAL

Jacobs
1100 NORTH GLEBE ROAD
SUITE 500
ARLINGTON, VIRGINIA 22201
571.218.1000
FAX: 571.218.1600
A/E INFO

APPROVED
FOR COMMANDER NAVFAC 8/14/2025
ACTIVITY
APPROVED BY LCDR ELIZABETH OLOKODE NAVFAC NLON FEAD DIRECTOR NEW LONDON, GROTON, CT
SATISFACTORY TO DATE 05/27/2025

DES CWH	DRW CHW	CHK MJL	
PM/DM	SMS/CWJ		
BRANCH MANAGER	ALG		
CHIEF ENG/ARCH	JWJ		
FIRE PROTECTION	HPN		

DEPARTMENT OF THE NAVY
NAVAL FACILITIES ENGINEERING SYSTEMS COMMAND
MID-ATLANTIC
NAVAL FACILITIES ENGINEERING SYSTEMS COMMAND - MID-ATLANTIC
NAVAL STATION - NORFOLK, VA
NAVAL SUBMARINE BASE NEW LONDON
GROTON, CONNECTICUT
P-1102 WEAPONS MAGAZINE & ORDNANCE OPERATIONS FACILITY
CLWS MAGAZINE
MECHANICAL CONTROLS DIAGRAMS & SEQUENCES

SCALE: AS SHOWN
EPROJECT NO.: 1667770
CONSTR. CONTR. NO.
NAVFAC DRAWING NO.
12894294
SHEET 51 OF 77
M-804S

FILE NAME: C:\pw_workdir\dms0033\prj_hilicw\d1509825\CLWS M-804S.dwg LAYOUT NAME: Layout1 PLOTTED: Tuesday, June 17, 2025 - 1:04pm USER: HGICW

AIR HANDLING UNITS (AHU-1 & AHU-2) POINTS SCHEDULE

FUNCTION	NAME	DESCRIPTION	DDC HARDWARE ID	SETTING (WITH UNITS)	RANGE (WITH UNITS)	IO TYPE	HOA REQ'D	CONFIG. TYPE	M&C VIEW AND OVRD	LDP VIEW AND OVRD	TREND REQ'D	ALARMING: ALARM CONDITION	ALARMING: ALARM PRIORITY	ALARMING: M&C ROUTING	PRIMARY POINT INFORMATION: OBJECT TYPE AND INSTANCE NUMBER (AND PROPERTY ID)	PRIMARY POINT INFORMATION: NIAGARA ID	NETWORK DATA EXCHANGE: DATA FROM	NETWORK DATA EXCHANGE: DATA TO	OVERRIDES: OBJECT TYPE & INSTANCE NUMBER OR COMMANDABLE	TREND OBJECT LOCATION (L OR R), TYPE AND INSTANCE NUMBER (PROVIDE DDC ID FOR REMOTE IN NOTES)	ALARM INFORMATION: ALARM TYPE (PROVIDE DDC ID FOR REMOTE IN NOTES)	ALARM INFORMATION: NOTIFICATION CLASS OBJECT INSTANCE NUMBER	CONFIGURATION INFORMATION
PROOFS & SAFETIES	AHU-1-SF-S	AHU-1 SUPPLY FAN STATUS			ON/OFF	BI			V	V	Y	SUPPLY FAN PROOF FAILED	CRIT	[___]	<___>	<___>	<___>	<___>	<___>	<___>	<___>	<___>	<___>
	AHU-1-SA-HSP	AHU-1 SUPPLY AIR HIGH STATIC PRESSURE SWITCH	<___>	2 INCH	ALM/NORMAL	BI		H	V	V	Y	ALM	CRIT	[___]	<___>	<___>	<___>	<___>	<___>	<___>	<___>	<___>	<___>
	AHU-1-RA-LSP	AHU-1 RETURN AIR LOW STATIC PRESSURE SWITCH	<___>	-2 INCH	ALM/NORMAL	BI		H	V	V	Y	ALM	CRIT	[___]	<___>	<___>	<___>	<___>	<___>	<___>	<___>	<___>	<___>
	AHU-1-COMP-1-S	AHU-1 COMPRESSOR 1 STATUS			ON/OFF	BI			V	V	Y	COMPRESSOR 1 PROOF FAILED	CRIT	[___]	<___>	<___>	<___>	<___>	<___>	<___>	<___>	<___>	<___>
	AHU-1-COMP-1-ALM	AHU-1 COMPRESSOR 1 ALARM			ALM/NORMAL	BI			V	V	Y	ALM	INFO	[___]	<___>	<___>	<___>	<___>	<___>	<___>	<___>	<___>	<___>
	AHU-1-COMP-1-HPS	AHU-1 COMPRESSOR 1 HIGH PRESSURE			ALM/NORMAL	BI			V	V	Y	ALM	INFO	[___]	<___>	<___>	<___>	<___>	<___>	<___>	<___>	<___>	<___>
	AHU-1-COMP-1-LPS	AHU-1 COMPRESSOR 1 LOW PRESSURE			ALM/NORMAL	BI			V	V	Y	ALM	INFO	[___]	<___>	<___>	<___>	<___>	<___>	<___>	<___>	<___>	<___>
	AHU-1-COMP-2-S	AHU-1 COMPRESSOR 2 STATUS			ON/OFF	BI			V	V	Y	COMPRESSOR 2 PROOF FAILED	CRIT	[___]	<___>	<___>	<___>	<___>	<___>	<___>	<___>	<___>	<___>
	AHU-1-COMP-2-ALM	AHU-1 COMPRESSOR 2 ALARM			ALM/NORMAL	BI			V	V	Y	ALM	INFO	[___]	<___>	<___>	<___>	<___>	<___>	<___>	<___>	<___>	<___>
	AHU-1-COMP-2-HPS	AHU-1 COMPRESSOR 2 HIGH PRESSURE			ALM/NORMAL	BI			V	V	Y	ALM	INFO	[___]	<___>	<___>	<___>	<___>	<___>	<___>	<___>	<___>	<___>
	AHU-1-COMP-2-LPS	AHU-1 COMPRESSOR 2 LOW PRESSURE			ALM/NORMAL	BI			V	V	Y	ALM	INFO	[___]	<___>	<___>	<___>	<___>	<___>	<___>	<___>	<___>	<___>
	AHU-1-OVERFLOW-ALM	AHU-1 CONDENSATE DRAIN PAN OVERFLOW ALARM	<___>		ALM/NORMAL	BI			V	V	Y	ALM	CRIT	[___]	<___>	<___>	<___>	<___>	<___>	<___>	<___>	<___>	<___>
	AHU-1-EH-S	AHU-1 ELECTRIC HEAT COIL STATUS	<___>		ON/OFF	BI			V	V	Y	ELECTRIC HEAT COIL PROOF FAILED	CRIT	[___]	<___>	<___>	<___>	<___>	<___>	<___>	<___>	<___>	<___>
	AHU-1-SA-D-POS	AHU-1 SUPPLY AIR DAMPER POSTION	<___>		OPEN/CLOSED	BI			V	V					<___>	<___>	<___>	<___>	<___>	<___>	<___>	<___>	<___>
	AHU-1-RA-D-POS	AHU-1 RETURN AIR DAMPER POSTION	<___>		OPEN/CLOSED	BI			V	V					<___>	<___>	<___>	<___>	<___>	<___>	<___>	<___>	<___>
	AHU-2-SF-S	AHU-2 SUPPLY FAN STATUS			ON/OFF	BI			V	V	Y	SUPPLY FAN PROOF FAILED	CRIT	[___]	<___>	<___>	<___>	<___>	<___>	<___>	<___>	<___>	<___>
	AHU-2-SA-HSP	AHU-2 SUPPLY AIR HIGH STATIC PRESSURE SWITCH	<___>	2 INCH	ALM/NORMAL	BI		H	V	V	Y	ALM	CRIT	[___]	<___>	<___>	<___>	<___>	<___>	<___>	<___>	<___>	<___>
	AHU-2-RA-LSP	AHU-2 RETURN AIR LOW STATIC PRESSURE SWITCH	<___>	-2 INCH	ALM/NORMAL	BI		H	V	V	Y	ALM	CRIT	[___]	<___>	<___>	<___>	<___>	<___>	<___>	<___>	<___>	<___>
	AHU-2-COMP-1-S	AHU-2 COMPRESSOR 1 STATUS			ON/OFF	BI			V	V	Y	COMPRESSOR 1 PROOF FAILED	CRIT	[___]	<___>	<___>	<___>	<___>	<___>	<___>	<___>	<___>	<___>
	AHU-2-COMP-1-ALM	AHU-2 COMPRESSOR 1 ALARM			ALM/NORMAL	BI			V	V	Y	ALM	INFO	[___]	<___>	<___>	<___>	<___>	<___>	<___>	<___>	<___>	<___>
	AHU-2-COMP-1-HPS	AHU-2 COMPRESSOR 1 HIGH PRESSURE			ALM/NORMAL	BI			V	V	Y	ALM	INFO	[___]	<___>	<___>	<___>	<___>	<___>	<___>	<___>	<___>	<___>
	AHU-2-COMP-1-LPS	AHU-2 COMPRESSOR 1 LOW PRESSURE			ALM/NORMAL	BI			V	V	Y	ALM	INFO	[___]	<___>	<___>	<___>	<___>	<___>	<___>	<___>	<___>	<___>
	AHU-2-COMP-2-S	AHU-2 COMPRESSOR 2 STATUS			ON/OFF	BI			V	V	Y	COMPRESSOR 2 PROOF FAILED	CRIT	[___]	<___>	<___>	<___>	<___>	<___>	<___>	<___>	<___>	<___>
	AHU-2-COMP-2-ALM	AHU-2 COMPRESSOR 2 ALARM			ALM/NORMAL	BI			V	V	Y	ALM	INFO	[___]	<___>	<___>	<___>	<___>	<___>	<___>	<___>	<___>	<___>
	AHU-2-COMP-2-HPS	AHU-2 COMPRESSOR 2 HIGH PRESSURE			ALM/NORMAL	BI			V	V	Y	ALM	INFO	[___]	<___>	<___>	<___>	<___>	<___>	<___>	<___>	<___>	<___>
	AHU-2-COMP-2-LPS	AHU-2 COMPRESSOR 2 LOW PRESSURE			ALM/NORMAL	BI			V	V	Y	ALM	INFO	[___]	<___>	<___>	<___>	<___>	<___>	<___>	<___>	<___>	<___>
	AHU-2-OVERFLOW-ALM	AHU-2 CONDENSATE DRAIN PAN OVERFLOW ALARM	<___>		ALM/NORMAL	BI			V	V	Y	ALM	CRIT	[___]	<___>	<___>	<___>	<___>	<___>	<___>	<___>	<___>	<___>
	AHU-2-EH-S	AHU-2 ELECTRIC HEAT COIL STATUS	<___>		ON/OFF	BI			V	V	Y	ELECTRIC HEAT COIL PROOF FAILED	CRIT	[___]	<___>	<___>	<___>	<___>	<___>	<___>	<___>	<___>	<___>
	AHU-2-SA-D-POS	AHU-2 SUPPLY AIR DAMPER POSTION	<___>		OPEN/CLOSED	BI			V	V					<___>	<___>	<___>	<___>	<___>	<___>	<___>	<___>	<___>
	AHU-2-RA-D-POS	AHU-2 RETURN AIR DAMPER POSTION	<___>		OPEN/CLOSED	BI			V	V					<___>	<___>	<___>	<___>	<___>	<___>	<___>	<___>	<___>
START/STOP	SYS-ENA	SYSTEM ENABLE			ENABLE/DISABLE	NET-IN			V	V					<___>	<___>	<___>	<___>	<___>	<___>	<___>	<___>	<___>
	SYS-LEAD/STBY-ENA	SYSTEM LEAD/STANDBY ENABLE			ENABLE/DISABLE	NET-IN			V	V					<___>	<___>	<___>	<___>	<___>	<___>	<___>	<___>	<___>
	AHU-1-SF-SS	AHU-1 SUPPLY FAN START/STOP			ON/OFF	BO			VO	V	Y				<___>	<___>	<___>	<___>	<___>	<___>	<___>	<___>	<___>
	AHU-1 STATUS	AHU-1 STATUS			HEAT/COOL/DEH/OFF	NET-OUT			V	V					<___>	<___>	<___>	<___>	<___>	<___>	<___>	<___>	<___>
	AHU-2-SF-SS	AHU-2 SUPPLY FAN START/STOP			ON/OFF	BO			VO	V	Y				<___>	<___>	<___>	<___>	<___>	<___>	<___>	<___>	<___>
	AHU-2 STATUS	AHU-2 STATUS			HEAT/COOL/DEH/OFF	NET-OUT			V	V					<___>	<___>	<___>	<___>	<___>	<___>	<___>	<___>	<___>
ZONE TEMPERATURE AND HUMIDITY CONTROL	AHU-1-ZN-TS	AHU-1 ZONE TEMPERATURE	<___>		<___>	AI			V	V	Y	SYSTEM HAS BEEN RUNNING FOR MORE THAN 15 MINUTES AND ZN-T IS MORE THAN 5 DEG F ABOVE ZONE COOLING OR BELOW HEATING SETPOINT	CRIT	[___]	<___>	<___>	<___>	<___>	<___>	<___>	<___>	<___>	<___>
	AHU-2-ZN-TS	AHU-2 ZONE TEMPERATURE	<___>		<___>	AI			V	V	Y	SYSTEM HAS BEEN RUNNING FOR MORE THAN 15 MINUTES AND ZN-T IS MORE THAN 5 DEG F ABOVE ZONE COOLING OR BELOW HEATING SETPOINT	CRIT	[___]	<___>	<___>	<___>	<___>	<___>	<___>	<___>	<___>	<___>
	ZN-T-SP	ZONE TEMPERATURE SETPOINT (AVERAGE)		HTG = 50 DEG F; CLG = 85 DEG F		NET-IN			VO	V					<___>	<___>	<___>	<___>	<___>	<___>			<___>
	AHU-1-ZN-RH	AHU-1 ZONE HUMIDITY	<___>		<0 - ___%RH>	AI			V	V	Y	SYSTEM HAS BEEN RUNNING FOR MORE THAN 15 MINUTES AND ZN-RH IS MORE THAN 5%RH ABOVE ZN-RH-SP	CRIT	[___]	<___>	<___>	<___>	<___>	<___>	<___>	<___>	<___>	<___>
	AHU-2-ZN-RH	AHU-2 ZONE HUMIDITY	<___>		<0 - ___%RH>	AI			V	V	Y	SYSTEM HAS BEEN RUNNING FOR MORE THAN 15 MINUTES AND ZN-RH IS MORE THAN 5%RH ABOVE ZN-RH-SP	CRIT	[___]	<___>	<___>	<___>	<___>	<___>	<___>	<___>	<___>	<___>
	ZN-RH-SP	ZONE HUMIDITY SETPOINT (AVERAGE)		50%RH		NET-IN			VO	V					<___>	<___>	<___>	<___>	<___>	<___>			<___>
	AHU-1 MODE	AHU-1 MODES			HEAT/COOL/DEH/OFF	NET-IN			V	V					<___>	<___>	<___>	<___>	<___>	<___>	<___>	<___>	<___>
	AHU-1-EH-C	AHU-1 ELECTRIC HEATING COIL COMMAND			0-100%	AO			VO	V	Y				<___>	<___>	<___>	<___>	<___>	<___>	<___>	<___>	<___>
	AHU-1 COMP-MODE	AHU-1 COMPRESSOR COOLING/DEHUMIDIFICATION MODE			COOL/DEH/OFF	NET-IN			V	V					<___>	<___>	<___>	<___>	<___>	<___>	<___>	<___>	<___>
	AHU-1-COMP-1-C	AHU-1 COMPRESSOR 1 COMMAND			0-100%	AO			VO	V	Y				<___>	<___>	<___>	<___>	<___>	<___>	<___>	<___>	<___>
	AHU-1-COMP-2-SS	AHU-1 COMPRESSOR 2 START/STOP			ON/OFF	BO			VO	V	Y				<___>	<___>	<___>	<___>	<___>	<___>	<___>	<___>	<___>
	AHU-1-DX-EVAP-T	AHU-1 AIR LEAVING EVAPORATOR TEMPERATURE			<___>DEG F	AI			V	V	Y				<___>	<___>	<___>	<___>	<___>	<___>	<___>	<___>	<___>
	AHU-1-HG-C	DX COIL HOT GAS COMMAND			0-100%	AO			VO	V	Y				<___>	<___>	<___>	<___>	<___>	<___>	<___>	<___>	<___>
	AHU-1-SA-T	AHU-1 SUPPLY AIR TEMPERATURE			<___>DEG F	AI			V	V	Y				<___>	<___>	<___>	<___>	<___>	<___>	<___>	<___>	<___>
	AHU-1-SA-T-SP	AHU-1 SUPPLY AIR TEMPERATURE SETPOINT		69 DEG F		NET-IN			VO	V	Y				<___>	<___>	<___>	<___>	<___>	<___>	<___>	<___>	<___>
	AHU-2 MODE	AHU-2 MODES			HEAT/COOL/DEH/OFF	NET-IN			V	V					<___>	<___>	<___>	<___>	<___>	<___>	<___>	<___>	<___>
	AHU-2-EH-C	AHU-2 ELECTRIC HEATING COIL COMMAND			0-100%	AO			VO	V	Y				<___>	<___>	<___>	<___>	<___>	<___>	<___>	<___>	<___>
	AHU-2 COMP-MODE	AHU-2 COMPRESSOR COOLING/DEHUMIDIFICATION MODE			COOL/DEH/OFF	NET-IN			V	V					<___>	<___>	<___>	<___>	<___>	<___>	<___>	<___>	<___>
	AHU-2-COMP-1-C	AHU-2 COMPRESSOR 1 COMMAND			0-100%	AO			VO	V	Y				<___>	<___>	<___>	<___>	<___>	<___>	<___>	<___>	<___>
	AHU-2-COMP-2-SS	AHU-2 COMPRESSOR 2 START/STOP			ON/OFF	BO			VO	V	Y				<___>	<___>	<___>	<___>	<___>	<___>	<___>	<___>	<___>
	AHU-2-DX-EVAP-T	AHU-2 AIR LEAVING EVAPORATOR TEMPERATURE			<___>DEG F	AI			V	V	Y				<___>	<___>	<___>	<___>	<___>	<___>	<___>	<___>	<___>
	AHU-2-HG-C	DX COIL HOT GAS COMMAND			0-100%	AO			VO	V	Y				<___>	<___>	<___>	<___>	<___>	<___>	<___>	<___>	<___>
	AHU-2-SA-T	AHU-2 SUPPLY AIR TEMPERATURE			<___>DEG F	AI			V	V	Y				<___>	<___>	<___>	<___>	<___>	<___>	<___>	<___>	<___>
	AHU-2-SA-T-SP	AHU-2 SUPPLY AIR TEMPERATURE SETPOINT		69 DEG F		NET-IN			VO	V	Y				<___>	<___>	<___>	<___>	<___>	<___>	<___>	<___>	<___>
OTHER POINTS	AHU-1-EH-LA-T	AHU-1 ELECTRIC HEAT COIL LEAVING AIR TEMPERATURE			<___>DEG F	AI			V	V	Y				<___>	<___>	<___>	<___>	<___>	<___>	<___>	<___>	<___>
	AHU-1-DX-LA-T	AHU-1 DX COOLING COIL LEAVING AIR TEMPERATURE			<___>DEG F	AI			V	V	Y				<___>	<___>	<___>	<___>	<___>	<___>	<___>	<___>	<___>
	AHU-1-RA-T	AHU-1 RETURN AIR TEMPERATURE			<___>DEG F	AI			V	V	Y				<___>	<___>	<___>	<___>	<___>	<___>	<___>	<___>	<___>
	AHU-1-RA-FLT-P-HL	RETURN AIR FILTER PRESSURE HIGH LIMIT SWITCH			ALM/NORMAL	BI			V	V	Y	ALM	INFO	[___]	<___>	<___>	<___>	<___>	<___>	<___>	<___>	<___>	<___>
	AHU-2-EH-LA-T	AHU-2 ELECTRIC HEAT COIL LEAVING AIR TEMPERATURE			<___>DEG F	AI			V	V	Y				<___>	<___>	<___>	<___>	<___>	<___>	<___>	<___>	<___>
	AHU-2-DX-LA-T	AHU-2 DX COOLING COIL LEAVING AIR TEMPERATURE			<___>DEG F	AI			V	V	Y				<___>	<___>	<___>	<___>	<___>	<___>	<___>	<___>	<___>
	AHU-2-RA-T	AHU-2 RETURN AIR TEMPERATURE			<___>DEG F	AI			V	V	Y				<___>	<___>	<___>	<___>	<___>	<___>	<___>	<___>	<___>
	AHU-2-RA-FLT-P-HL	RETURN AIR FILTER PRESSURE HIGH LIMIT SWITCH			ALM/NORMAL	BI			V	V	Y	ALM	INFO	[___]	<___>	<___>	<___>	<___>	<___>	<___>	<___>	<___>	<___>

POINTS SCHEDULE LEGEND

"<___>" "___" "[___]"
- INDICATES ENTRY MADE BY BUILDING CONTRACTOR.
- INDICATES NO ENTRY REQUIRED.
- INDICATES INFORMATION WILL BE PROVIDED AS PART OF INTEGRATION.

C CONFIGURABLE
CRIT CRITICAL ALARM
H HARDWARE

INFO INFORMATIONAL ALARM
N/A INDICATES NO VALID ENTRY AVAILABLE
NET-IN NETWORK INPUT POINT

NET-OUT NETWORK OUTPUT POINT
O OVERRIDABLE
OC OPERATOR CONFIGURABLE

V VIEWABLE
VO VIEWABLE AND OVERRIDABLE
Y REQUIRED

SYM	DESCRIPTION	DATE	APPR

NAVFAC

COMMONWEALTH OF VIRGINIA
CHRISTOPHER W. HILL
Lic. No. 0402055245
06/23/2025
PROFESSIONAL ENGINEER
SEAL

Jacobs
1100 NORTH GLEBE ROAD
SUITE 500
ARLINGTON, VIRGINIA 22201
571.218.1000
FAX: 571.218.1600

A/E INFO

APPROVED
FOR COMMANDER NAVFAC 8/14/2025

ACTIVITY
APPROVED BY LCDR ELIZABETH OLOKODE NAVFAC NLON FEAD DIRECTOR NEW LONDON, GROTON, CT

SATISFACTORY TO DATE: 05/27/2025

DES	CWH	DRW	CWH	CHK	MJL
PM/DM	SMS/CWJ				
BRANCH MANAGER	ALG				
CHIEF ENG/ARCH	JWJ				
FIRE PROTECTION	HPN				

DEPARTMENT OF THE NAVY
NAVAL FACILITIES ENGINEERING SYSTEMS COMMAND
MID-ATLANTIC
NAVAL FACILITIES ENGINEERING SYSTEMS COMMAND - MID-ATLANTIC
NAVAL STATION - NORFOLK, VA
NAVAL SUBMARINE BASE NEW LONDON
GROTON, CONNECTICUT
P-1102 WEAPONS MAGAZINE & ORDNANCE OPERATIONS FACILITY
CLWS MAGAZINE
MECHANICAL CONTROLS POINTS SCHEDULE

SCALE: AS SHOWN
EPROJECT NO.: 1667770
CONSTR. CONTR. NO.
NAVFAC DRAWING NO. 12894295
SHEET 52 OF 77
M-805S

FILE NAME: C:\pw_work\d\jacobs\jeng_hilltca\d1509825\CLWS M-805S.dwg LAYOUT NAME: Layout1 PLOTTED: Tuesday, June 17, 2025 - 1:04pm USER: HILLCW

F-1 FAN & UH-1 UNIT HEATER POINTS SCHEDULE

FUNCTION	NAME	DESCRIPTION	DDC HARDWARE ID	SETTING (WITH UNITS)	RANGE (WITH UNITS)	IO TYPE	HOA REQ'D	CONFIG. TYPE	M&C VIEW AND OVRD	LDP VIEW AND OVRD	TREND REQ'D	ALARMING: ALARM CONDITION	ALARMING: ALARM PRIORITY	ALARMING: M&C ROUTING	PRIMARY POINT INFORMATION: OBJECT TYPE AND INSTANCE NUMBER (AND PROPERTY ID)	PRIMARY POINT INFORMATION: NIAGARA ID	NETWORK DATA EXCHANGE: DATA FROM	NETWORK DATA EXCHANGE: DATA TO	OVERRIDES: OBJECT TYPE & INSTANCE NUMBER OR COMMANDABLE	ALARM INFORMATION: ALARM TYPE (PROVIDE DDC ID FOR REMOTE IN NOTES)	ALARM INFORMATION: NOTIFICATION CLASS OBJECT INSTANCE NUMBER	CONFIGURATION INFORMATION
PROOFS & SAFETIES	F-1-S	F-1 FAN STATUS	<___>		ON/OFF	BI			V	V	Y	F-1 FAN PROOF FAILED	CRIT	[___]	<___>	<___>	<___>	<___>	<___>	<___>	<___>	<___>
	UH-1-FAN-S	UH-1 FAN STATUS	<___>		ON/OFF	BI			V	V	Y	UNIT HEATER FAN PROOF FAILED	CRIT	[___]	<___>	<___>	<___>	<___>	<___>	<___>	<___>	<___>
	OA-D-1-POS	OUTSIDE AIR DAMPER POSTION	<___>		OPEN/CLOSED	BI			V	V					<___>	<___>	<___>	<___>	<___>	<___>	<___>	<___>
	OA-D-2-POS	OUTSIDE AIR DAMPER POSTION	<___>		OPEN/CLOSED	BI			V	V					<___>	<___>	<___>	<___>	<___>	<___>	<___>	<___>
ZONE TEMPERATURE CONTROL	ZN-T	ZONE TEMPERATURE	<___>		45-120 DEG F	AI			V	V	Y	ZN-T IS ABOVE 105 DEG F (ADJ.) OR BELOW 50 DEG F (ADJ.)	CRIT	[___]	<___>	<___>	<___>	<___>	<___>	<___>	<___>	<___>
	ZN-T-SP	ZONE TEMPERATURE SETPOINT		SEE SEQUENCE		NET-IN		C	VO	V					<___>	<___>	<___>	<___>				<___>
	F-1-C	SUPPLY FAN COMMAND	<___>		0-100%	AO			VO	V	Y				<___>	<___>	<___>	<___>	<___>	<___>	<___>	<___>
	UH-1-FAN-SS	SUPPLY FAN START/STOP	<___>		ON/OFF	BO			V	V	Y				<___>	<___>	<___>	<___>	<___>	<___>	<___>	<___>
	UH-1-EH-2P	ELECTRIC COIL COMMAND	<___>		ON/OFF	BO			VO	V	Y				<___>	<___>	<___>	<___>	<___>	<___>	<___>	<___>

POINTS SCHEDULE LEGEND

"<___>"	INDICATES ENTRY MADE BY BUILDING CONTRACTOR.	C	CONFIGURABLE	INFO	INFORMATIONAL ALARM	NET-OUT	NETWORK OUTPUT POINT	V	VIEWABLE
"___"	INDICATES NO ENTRY REQUIRED.	CRIT	CRITICAL ALARM	N/A	INDICATES NO VALID ENTRY AVAILABLE	O	OVERRIDABLE	VO	VIEWABLE AND OVERRIDABLE
[___]	INDICATES INFORMATION WILL BE PROVIDED AS PART OF INTEGRATION.	H	HARDWARE	NET-IN	NETWORK INPUT POINT	OC	OPERATOR CONFIGURABLE	Y	REQUIRED

SYM	DESCRIPTION	DATE	APPR.

Jacobs
1100 NORTH GLEBE ROAD
SUITE 500
ARLINGTON, VIRGINIA 22201
571.218.1000
FAX: 571.218.1600

COMMONWEALTH OF VIRGINIA
CHRISTOPHER W. HILL
Lic. No. 0402055245
06/23/2025
PROFESSIONAL ENGINEER
SEAL

A/E INFO

APPROVED
FOR COMMANDER NAVFAC 8/14/2025

ACTIVITY
APPROVED BY LCDR ELIZABETH OLOKODE NAVFAC NLON FEAD DIRECTOR NEW LONDON, GROTON, CT
SATISFACTORY TO DATE 05/27/2025

DES CWH | DRW CHW | CHK MJL
PM/DM SMS/CWJ
BRANCH MANAGER ALG
CHIEF ENG/ARCH JWJ
FIRE PROTECTION HPN

DEPARTMENT OF THE NAVY
NAVAL FACILITIES ENGINEERING SYSTEMS COMMAND
MID-ATLANTIC
NAVAL FACILITIES ENGINEERING SYSTEMS COMMAND - MID-ATLANTIC
NAVAL STATION - NORFOLK, VA
NAVAL SUBMARINE BASE NEW LONDON
GROTON, CONNECTICUT
P-1102 WEAPONS MAGAZINE & ORDNANCE OPERATIONS FACILITY
OLWS MAGAZINE
MECHANICAL CONTROLS POINTS SCHEDULE

SCALE: AS SHOWN
EPROJECT NO.: 1667770
CONSTR. CONTR. NO.
NAVFAC DRAWING NO. 12894296
SHEET 53 OF 77
M-806S

FILE NAME: C:\pw_work\dr\dms003\proj_hillcw\d1509825\OLWS M-806S.dwg LAYOUT NAME: Layout1 PLOTTED: Tuesday, June 17, 2025 - 1:05pm USER: HIICW