P-1102 WEAPONS MAGAZINE & ORDNANCE OPERATIONS FACILITY

TYPE G MAGAZINE

NAVAL SUBMARINE BASE NEW LONDON, GROTON, CONNECTICUT

NAVAL FACILITIES ENGINEERING COMMAND MID-ATLANTIC

NAVFAC FACILITIES ENGINEERING AND ACQUISITION DIVISION (FEAD)

FINAL DESIGN

6/23/2025

VICINITY MAP

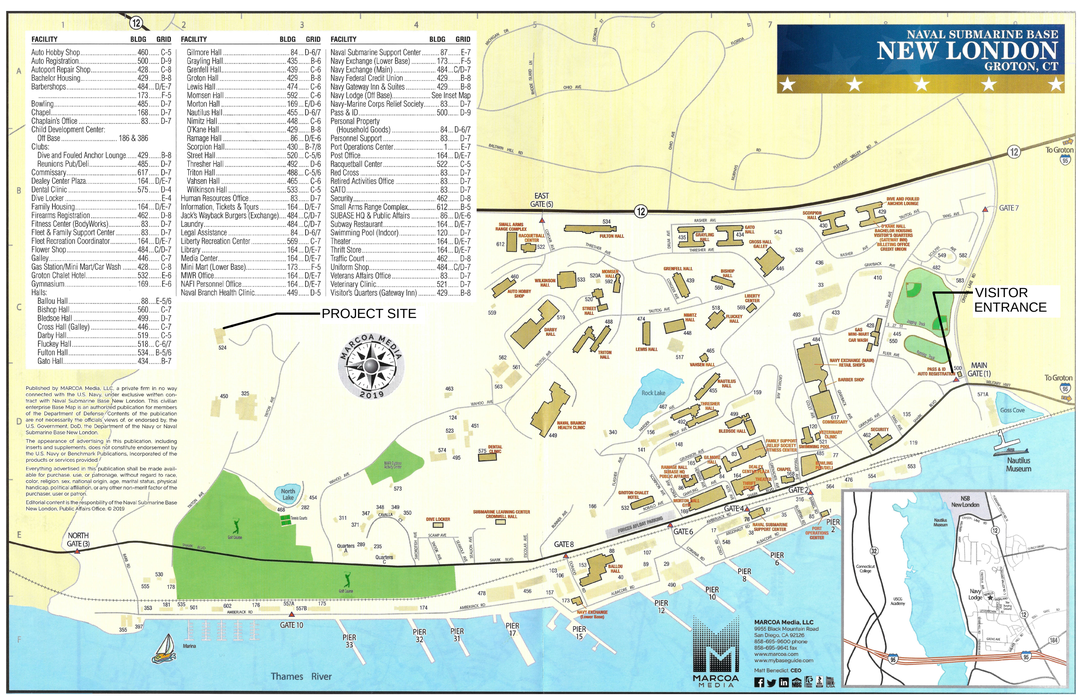

FACILITY	BLDG	GRID
Auto Hobby Shop	460	C-5
Auto Registration	500	D-9
Autoport Repair Shop	428	C-8
Bachelor Housing	429	B-8
Barbershops	484	D/E-7
	173	F-5
Bowling	485	D-7
Chapel	168	D-7
Chaplain's Office	83	D-7
Child Development Center:		
Off Base	186 & 386	
Clubs:		
Dive and Fouled Anchor Lounge	429	B-8
Reunions Pub/Deli	485	D-7
Commissary	617	D-7
Dealey Center Plaza	164	D/E-7
Dental Clinic	575	D-4
Dive Locker		E-4
Family Housing	164	D/E-7
Firearms Registration	462	D-8
Fitness Center (BodyWorks)	83	D-7
Fleet & Family Support Center	83	D-7
Fleet Recreation Coordinator	164	D/E-7
Flower Shop	484	C/D-7
Galley	446	C-7
Gas Station/Mini Mart/Car Wash	428	C-8
Groton Chalet Hotel	532	E-6
Gymnasium	169	E-6
Halls:		
Ballou Hall	88	E-5/6
Bishop Hall	560	C-7
Bledsoe Hall	499	D-7
Cross Hall (Galley)	446	C-7
Darby Hall	519	C-5
Fluckey Hall	518	C-6/7
Fulton Hall	534	B-5/6
Gato Hall	434	B-7

FACILITY	BLDG	GRID
Gilmore Hall	84	D-6/7
Grayling Hall	435	B-6
Grenfell Hall	439	C-6
Groton Hall	429	B-8
Lewis Hall	474	C-6
Momsen Hall	592	C-6
Morton Hall	169	E/D-6
Nautilus Hall	455	D-6/7
Nimitz Hall	448	C-6
O'Kane Hall	429	B-8
Ramage Hall	86	D/E-6
Scorpion Hall	430	B-7/8
Street Hall	520	C-5/6
Tinnesher Hall	452	D-6
Triton Hall	488	C-5/6
Vahsen Hall	465	C-6
Wilkinson Hall	533	C-5
Human Resources Office	83	D-7
Information, Tickets & Tours	164	D/E-7
Jack's Wayback Burgers (Exchange)	484	C/D-7
Laundry	484	C/D-7
Legal Assistance	84	D-6/7
Liberty Recreation Center	569	C-7
Library	164	D/E-7
Media Center	164	D/E-7
Mini Mart (Lower Base)	172	F-5
MWR Office	164	D/E-7
NAFI Personnel Office	164	D/E-7
Naval Branch Health Clinic	449	D-5

FACILITY	BLDG	GRID
Naval Submarine Support Center	87	E-7
Navy Exchange (Lower Base)	173	F-5
Navy Exchange (Main)	484	C/D-7
Navy Federal Credit Union	429	B-8
Navy Gateway Inn & Suites	429	B-8
Navy Lodge (Off Base)	See Inset Map	
Navy-Marine Corps Relief Society	83	D-7
Pass & ID	500	D-9
Personal Property		
(Household Goods)	84	D-6/7
Personnel Support	83	D-7
Port Operations Center	1	E-7
Post Office	164	D/E-7
Racquetball Center	522	C-5
Red Cross	83	D-7
Retired Activities Office	83	D-7
SATO	83	D-7
Security	462	D-8
Small Arms Range Complex	612	B-5
SUBASE HQ & Public Affairs	85	D/E-6
Subway Restaurant	164	D/E-7
Swimming Pool (Indoor)	120	D-7
Theater	164	D/E-7
Thrift Store	164	D/E-7
Traffic Court	462	D-8
Uniform Shop	484	C/D-7
Veterans Affairs Office	83	D-7
Veterinary Clinic	521	D-7
Visitor's Quarters (Gateway Inn)	429	B-8

LOCATION MAP

APPR	
DATE	
DESCRIPTION	
SYM	

Jacobs
1100 NORTH GLEBE ROAD
SUITE 500
ARLINGTON, VIRGINIA 22201
571.218.1000
FAX: 571.218.1600

A/E INFO

APPROVED

FOR COMMANDER NAVFAC 8/14/2025

ACTIVITY
APPROVED BY LCDR ELIZABETH
OLOKODE NAVFAC NLON FEAD
DIRECTOR NEW LONDON, GROTON, CT

SATISFACTORY TO DATE 05/27/2025

DES	CW	DRW	CW
CHK	SA		
PM/DM	SMS/CWJ		
BRANCH MANAGER	NEK		
CHIEF ENG/ARCH	JWJ		
FIRE PROTECTION	HPN		

DEPARTMENT OF THE NAVY
NAVAL FACILITIES ENGINEERING COMMAND
MID-ATLANTIC

NAVAL FACILITIES ENGINEERING SYSTEMS COMMAND
NAVAL STATION - NORFOLK, VA

NAVAL FACILITIES ENGINEERING SYSTEMS COMMAND - MID-ATLANTIC

NAVAL SUBMARINE BASE NEW LONDON

GROTON, CONNECTICUT

P-1102 WEAPONS MAGAZINE & ORDNANCE OPERATIONS FACILITY
TYPE G MAGAZINE

COVER SHEET

SCALE:	AS NOTED
EPROJECT NO.:	1667770
CONSTR. CONTR. NO.	
NAVFAC DRAWING NO.	12894153
SHEET	1 OF 91

G-001

FILE NAME: C:\pw_workdir\dms003\jrng_mcadic\d1715053\1\jrnrC-G-001 - COVER SHEET_FINAL.dwg LAYOUT NAME: Layout PLOTTED: Thursday, June 19, 2025 - 2:44pm USER: mcadic

BOXC-G-001 | COVER SHEET_P1102.dwg

FDZE1628

GENERAL PROJECT SYMBOLS

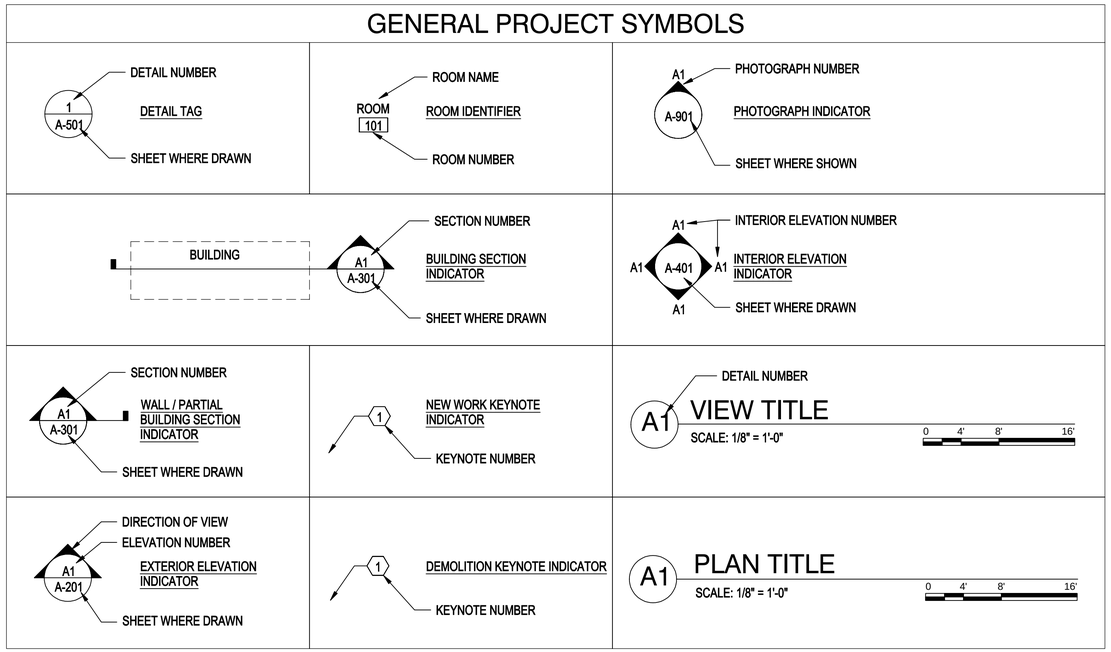

DEPARTMENT OF DEFENSE EXPLOSIVES SAFETY BOARD (DDESB) APPROVAL NOTES:

DO NOT REMOVE THESE NOTES WHEN PREPARING CONSTRUCTION DRAWINGS FOR SITE ADAPTATION.

1. THIS STANDARD IS APPROVED BY THE DEPARTMENT OF DEFENSE EXPLOSIVE SAFETY BOARD (DDESB) AS A 7-BAR EARTH COVERED MAGAZINE AND MAY BE SITED AS AN EXPOSED SITE MAGAZINE FROM OTHER POTENTIAL EXPLOSION SITES STORING UP TO 500,000 LBS HAZARD DIVISION 1.1 EXPLOSIVES.
2. THE DESIGN AND DETAILING OF THIS STANDARD MAGAZINE FOR BLAST LOADING IS THE SOLE RESPONSIBILITY OF THE GOVERNMENT. THE GOVERNMENT IS THE ENGINEER OF RECORD FOR THE BLAST DOOR.
3. ANY DEVIATION FROM THESE STANDARD DRAWINGS, EXCEPT FOR FOUNDATION MODIFICATIONS, WITHOUT THE WRITTEN APPROVAL FROM THE DEPARTMENT OF DEFENSE EXPLOSIVE SAFETY BOARD (DDESB) MAY REQUIRE THE MAGAZINE TO BE CONSIDERED AN UNDEFINED MAGAZINE AND MAY SEVERELY RESTRICT THE ALLOWABLE STORAGE CAPACITY.
4. THE SITE ADAPT ENGINEER IS THE ENGINEER OF RECORD FOR THE SITE ADAPT PROCESS.

TYPE G

SHEET NO. NO.	SHEET NO. SHEET	NAVFAC DWG NO.	SHEET TITLE
GENERAL			
1	G-001	12894153	COVER SHEET
2	G-002	12894154	SHEET INDEX
STRUCTURAL			
3	S-001	12894155	GENERAL STRUCTURAL NOTES
4	S-002	12894156	GENERAL STRUCTURAL NOTES
5	S-003	12894157	GENERAL STRUCTURAL NOTES
6	S-004S	12894158	GENERAL STRUCTURAL NOTES
7	S-010S	12894159	OVERALL PLAN - SITE ADAPTED
8	S-011S	12894160	EPDM COVER LAYOUT - SITE ADAPTED
9	S-101AS	12894161	FOUNDATION PLAN
10	S-101BS	12894162	FOUNDATION PLAN
11	S-102AS	12894163	FLOOR SLAB REINFORCING PLAN
12	S-102BS	12894164	FLOOR SLAB REINFORCING PLAN
13	S-103	12894165	ROOF FRAMING PLAN
14	S-104	12894166	ROOF SLAB REINFORCING PLAN
15	S-105AS	12894167	DRAINAGE AND VENTILATION PLAN
16	S-105BS	12894168	DRAINAGE AND VENTILATION PLAN
17	S-106S	12894169	CRAIN RUNWAY PLAN - SITE ADAPTED
18	S-201AS	12894170	FRAMING ELEVATIONS
19	S-201BS	12894171	FRAMING ELEVATIONS
20	S-202S	12894172	FRAMING ELEVATIONS
21	S-203	12894173	FRAMING ELEVATIONS
22	S-204	12894174	FRAMING ELEVATIONS
23	S-205	12894175	FRONT WALL PARTIAL ELEVATION AND DETAILS
24	S-301S	12894176	WALL SECTIONS
25	S-302S	12894177	WALL SECTIONS
26	S-303	12894178	WALL SECTIONS
27	S-304	12894179	WALL SECTIONS
28	S-305S	12894180	WALL SECTIONS
29	S-401AS	12894181	ENLARGED PLANS
30	S-401BS	12894182	ENLARGED PLANS
31	S-402AS	12894183	ENLARGED PLANS
32	S-402BS	12894184	ENLARGED PLANS
33	S-403	12894185	ENLARGED PLANS
34	S-501	12894186	DOOR TRENCH AND COVER DETAILS
35	S-502	12894187	PILASTER REINF SETAILS
36	S-503	12894188	BOUNDARY ELEMENT REINF DETAILS
37	S-504	12894189	DOOR TRENCH AND COVER DETAILS
38	S-505	12894190	DOOR TRENCH AND COVER DETAILS
39	S-506S	12894191	DOOR STOP PLOW AND TRENCH COVER ROLLER DETAILS
40	S-507	12894192	CANOPY AND RAIL SUPPORT DETAILS
41	S-508	12894193	CANOPY AND RAIL SUPPORT DETAILS
42	S-509	12894194	SECURITY PILASTER DETAILS
43	S-510	12894195	SECURITY PILASTER DETAILS
44	S-511	12894196	TYPICAL CONCRETE DETAILS
45	S-512	12894197	TYPICAL CONCRETE DETAILS
46	S-520S	12894198	EPDM COVER DETAILS - SITE ADAPTED
47	S-521S	12894199	EPDM COVER SECTIONS - SITE ADAPTED
48	S-701	12894200	DOOR NOTES AND SCHEDULES
49	S-702	12894201	DOOR ELEVATIONS
50	S-703	12894202	DOOR PLATE ELEVATIONS
51	S-704	12894203	DOOR DETAILS
52	S-705	12894204	DOOR DETAILS
53	S-706	12894205	DOOR DETAILS
54	S-707	12894206	AIR INTAKE SECTIONS AND DETAILS
55	S-708	12894207	VENTILATION DETAILS, SECTIONS, AND ELEVATIONS
56	S-709	12894208	PENETRATION DETAILS
57	S-710S	12894209	DRAINAGE ISOMETRIC
ELECTRICAL			
58	E-001S	12894210	ELECTRICAL SYMBOLS & LEGEND - SITE ADAPTED
59	E-002S	12894211	ELECTRICAL SYMBOLS & LEGEND - SITE ADAPTED
60	EG101S	12894212	ELECTRICAL GROUNDING PLAN - SITE ADAPTED
61	EG102S	12894213	ELECTRICAL GROUNDING PLAN - SITE ADAPTED
62	EG201S	12894214	ELECTRICAL GROUNDING PLAN ELEVATIONS - SITE ADAPTED
63	EG202S	12894215	ELECTRICAL LIGHTNING ZONE PROTECTION ELEVATION - SITE ADAPTED
64	E-101S	12894216	ELECTRICAL FLOOR PLAN - SITE ADAPTED
65	E-102S	12894217	ELECTRICAL FLOOR PLAN - SITE ADAPTED
66	E-501S	12894218	ELECTRICAL DETAILS - SITE ADAPTED
67	E-502S	12894219	ELECTRICAL DETAILS - SITE ADAPTED
68	E-503S	12894220	ELECTRICAL DETAILS - SITE ADAPTED
69	E-504S	12894221	ELECTRICAL DETAILS - SITE ADAPTED
70	E-505S	12894222	ELECTRICAL DETAILS - SITE ADAPTED
71	E-506S	12894223	ELECTRICAL DETAILS - SITE ADAPTED
72	E-507S	12894224	ELECTRICAL DETAILS - SITE ADAPTED
73	E-508S	12894225	ELECTRICAL DETAILS - SITE ADAPTED
74	E-509S	12894226	ELECTRICAL DETAILS - SITE ADAPTED
75	E-510	12894227	ELECTRICAL DETAILS
76	E-511S	12894228	ELECTRICAL DETAILS - SITE ADAPTED
77	E-513S	12894229	ELECTRICAL DETAILS - SITE ADAPTED
78	E-514S	12894230	ELECTRICAL HEAT TRACE DETAILS
79	E-601S	12894231	ELECTRICAL ONE-LINE - SITE ADAPTED
80	E-602S	12894232	ELECTRICAL ONE-LINE - SITE ADAPTED
81	E-603S	12894233	ELECTRICAL SCHEDULES - SITE ADAPTED
82	E-604S	12894234	ELECTRICAL SCHEDULES - SITE ADAPTED
83	E-801S	12894235	ELECTRICAL HEAT TRACE PLAN
TELECOMMUNICATIONS			
84	T-001	12894236	TELECOMMUNICATIONS SYMBOL AND NOTES
85	T-101S	12894237	TELECOMMUNICATION FLOOR PLAN - SITE ADAPTED
86	T-501S	12894238	TELECOMMUNICATION DETAILS - SITE ADAPTED
87	T-601S	12894239	TELECOMMUNICATION AND SECURITY RISER
SECURITY			
88	TY001	12894240	SECURITY LEGAND SYMBOLS & ABBREVIATIONS
89	TY101S	12894241	SECURITY FLOOR PLAN
90	TY501S	12894242	SECURITY DETAILS
91	TY601S	12894243	TELECOMMUNICATION AND SECURITY RISER

SYM	DESCRIPTION	DATE	APPR

NAVFAC

COMMONWEALTH OF VIRGINIA
PETER SOUKAS
Lic. No. 401017157
6/23/2025
ARCHITECT

Jacobs
1100 NORTH GLEBE ROAD
SUITE 500
ARLINGTON, VIRGINIA 22201
571.218.1000
FAX: 571.218.1600

A/E INFO

APPROVED
FOR COMMANDER NAVFAC 8/14/2025

ACTIVITY
APPROVED BY LCDR ELIZABETH OLOKODE NAVFAC NLON FEAD DIRECTOR NEW LONDON, GROTON, CT

SATISFACTORY TO DATE 05/27/2025

DES	DRW	CHK
CW	CW	SA

PM/DM SMS/CWJ
BRANCH MANAGER NEK
CHIEF ENG/ARCH JWJ
FIRE PROTECTION HPN

DEPARTMENT OF THE NAVY
NAVAL FACILITIES ENGINEERING SYSTEMS COMMAND
MID-ATLANTIC

NAVAL FACILITIES ENGINEERING SYSTEMS COMMAND - MID-ATLANTIC
NAVAL STATION - NORFOLK, VA

NAVAL SUBMARINE BASE NEW LONDON
GROTON, CONNECTICUT

P-1102 WEAPONS MAGAZINE & ORDNANCE OPERATIONS FACILITY
TYPE G MAGAZINE

SHEET INDEX

SCALE: AS NOTED
EPROJECT NO.: 1667770
CONSTR. CONTR. NO.
NAVFAC DRAWING NO. 12894154
SHEET 2 OF 91

G-002

FILE NAME: C:\pw_workdir\dms003\jng_wcodcj\d17150511\ypeG-G-002 - SHEET INDEX.dwg LAYOUT NAME: Layout PLOTTED: Thursday, June 19, 2025 - 11:17am USER: wcodcj

GENERAL:

1. THESE CONSTRUCTION DOCUMENTS ARE CONSTRUCTION STANDARDS FOR THE NAVY TYPE G STANDARD MAGAZINES AND HAVE BEEN SITE ADAPTED BY THE EOR.
2. ALL MATERIALS AND WORKMANSHIP MUST CONFORM TO THE DRAWINGS AND SPECIFICATIONS.
3. EQUIPMENT PENETRATION OPENINGS AND LOCATIONS WHEN INDICATED ON DRAWINGS ARE FOR INFORMATION ONLY AND MUST BE VERIFIED WITH THE APPROPRIATE DRAWING AND/OR EQUIPMENT SUPPLIER BEFORE CONSTRUCTION.
   A. SEE STRUCTURAL AND ELECTRICAL DRAWINGS FOR SIZE AND LOCATION OF ALL OPENINGS REQUIRED FOR DUCT WORK, PIPES AND PIPE SLEEVES.
   B. OPENINGS OR POCKETS LARGER THAN 6 INCHES NOT INDICATED IN STRUCTURAL DRAWINGS MUST NOT BE PLACED WITHOUT WRITTEN NOTIFICATION OF THE CONTRACTING OFFICER.
   C. OPENINGS OR PENETRATIONS OF ANY SIZE IN BLAST-RESISTING STRUCTURAL COMPONENTS (BLAST DOOR, HEADER BEAM, PARAPET BEAM, PILASTERS, ROOF PANEL, SIDE WALLS, REAR WALL, INTERIOR COLUMNS) THAT ARE UNPLANNED OR NOT SHOWN IN THE DRAWINGS ARE NOT PERMITTED TO BE CONSTRUCTED WITHOUT PRIOR APPROVAL FROM THE CONTRACTING OFFICER.
4. THE STRUCTURAL DRAWINGS SHOW ONLY THE BASIC STRUCTURAL SYSTEM. REFER TO OTHER DRAWINGS FOR ORNAMENTS, GROOVES, CLIPS, GROUNDS, SLAB DEPRESSIONS, CURBS, EQUIPMENT PADS, PENETRATIONS, NON-BEARING WALLS AND OTHER NON-STRUCTURAL ITEMS.
5. GENERAL NOTES AND STANDARD DETAILS MUST BE USED WHERE APPLICABLE, UNLESS NOTED OTHERWISE. NOTES AND DETAILS ON THE DRAWINGS MUST TAKE PRECEDENCE OVER GENERAL NOTES AND STANDARD DETAILS. WHERE CONFLICTS ARISE BETWEEN DRAWINGS AND SPECIFICATIONS, MOST STRINGENT WILL GOVERN. CONTACT THE CONTRACTING OFFICER IN WRITING FOR CLARIFICATION BEFORE PROCEEDING WITH WORK.
6. ALL OMISSIONS AND/OR CONFLICTS BETWEEN VARIOUS ELEMENTS OF THE CONTRACT DOCUMENTS MUST BE BROUGHT TO THE ATTENTION OF THE CONTRACTING OFFICER IN WRITING BEFORE PROCEEDING WITH ANY WORK INVOLVED.
7. DIMENSIONS MUST NOT BE SCALED FROM THE PLANS, SECTIONS AND/OR DETAILS OF THE STRUCTURAL DRAWINGS.
8. COORDINATE WITH THE CONTRACTING OFFICER FOR PROCUREMENT AND INSTALLATION OF INTERNAL LOCKING DEVICE (ILD), BOLTWORKS, AND THE DISTRIBUTION OF KEY SETS FOR EACH MAGAZINE DOOR. THE ILD MUST BE PROCURED WITH TWO UNIQUE KEYS IN ORDER TO OPERATE THE BOLTWORKS.
9. CONTACT THE DoD LOCK PROGRAM FOR DIRECTIONS ON HOW TO PROCURE THE INTERNAL LOCKING DEVICE (ILD), BOLTWORKS, AND A LIST OF RECOMMENDED MANUFACTURERS FOR MAGAZINE DOORS:
   A. DoD LOCK PROGRAM: https://navfac.navy.mil/go/locks
   B. EMAIL: ILD_Field_Support@navy.mil
   C. ILD SUPPORT HOTLINE: 805-982-5625.
   D. DoD LOCK PROGRAM TECHNICAL SUPPORT HOTLINE: 800-290-7607 OR 805-982-1212.
10. COORDINATE WITH THE CONTRACTING OFFICER FOR THE CONNECTION OF THE BALANCED MAGNETIC SWITCH (BMS) ON THE DOOR AND THE ILD, WHICH MUST BE INSTALLED AND CONNECTED TO THE INTRUSION DETECTION SYSTEM (IDS) BY NIWC.

DESIGN CRITERIA:

1. THE STRUCTURAL DESIGN AND CONSTRUCTION MUST COMPLY WITH THE FOLLOWING GOVERNMENT STANDARDS:
   A. UFC 1-200-01, "DESIGN: GENERAL BUILDING REQUIREMENTS"
   B. FC 1-300-09N, "NAVY AND MARINE CORPS DESIGN PROCEDURES"
2. DESIGN LOADS:
   THE FOLLOWING LOADS WERE USED AS BASIS OF DESIGN.

A. DEAD LOADS	ACTUAL WEIGHT
a. SOIL	110 PCF
B. LIVE LOADS	
a. CANOPY ROOF	20 PSF
b. MAGAZINE AND MECHANICAL ROOM ROOF	100 PSF
c. MAGAZINE FLOOR	1,250 PSF (UNIFORM)
	32K (HS20-44 AXLE)
	15K (FORKLIFT AXLE)
	31K (CPS CONTAINER EACH)
	- TWO (2) STACKED CPS CONTAINERS
	- ONE (1) CPS CONTAINER IN CONCURRENCE WITH TRUCK TRAILER HS20-44 AXLE
	- ONE (1) CPS CONTAINER IN CONCURRENCE WITH FORKLIFT
d. MECHANICAL ROOM FLOOR	150 PSF (UNIFORM)

3. WIND DESIGN DATA

A. ULTIMATE WIND SPEED:	210 MPH
B. WIND SPEED (ALLOWABLE STRESS DESIGN)	163 MPH
C. EXPOSURE:	C
D. RISK CATEGORY:	III

4. SEISMIC DESIGN DATA

A. RISK CATEGORY:	III
B. IMPORTANCE FACTOR:	1.25
C. SEISMIC DESIGN CATEGORY:	D
D. SITE SEISMICITY:	Ss = 2.79g, S1 = 0.68g
E. SITE CLASS:	D

DESIGN CRITERIA: (CONTINUED)

5. SNOW DESIGN DATA:

A. GROUND SNOW LOAD:	45 PSF
B. EXPOSURE FACTOR:	1.0
C. IMPORTANCE FACTOR:	1.10
D. THERMAL FACTOR:	1.2

6. EXPLOSIVES SAFETY DESIGN LOADS:
   A. EXPLOSIVES SAFETY DESIGN LOADS FOR DOOR AND ROOF OF MAGAZINES ARE PRESCRIBED BY NAVFAC EXWC. DESIGN GUIDANCE IS PROVIDED BY UFC 3-340-02 2008 WITH CHANGE 2, 1 SEPT 2014.
   B. TRIANGULAR PULSE LOAD VALUES BASED ON NAVFAC EXWC TECHNICAL REPORT TR-NAVFAC EXWC-SH-2202, BASIS OF DESIGN FOR EXPLOSIVE SAFETY FOR UPDATES TO NAVY TYPE C AND TYPE D EARTH-COVERED MAGAZINES AND NAVY MODULAR STORAGE MAGAZINE, DATED SEPTEMBER 2021:

MEMBER	PEAK PRESSURE	IMPULSE	DURATION
DOOR AND HEADER BEAM	249 PSI	2,084 PSI-M S	16.7 M S
ROOF SLAB	142 PSI	1,626 PSI-M S	22.9 M S
ROOF PARAPET	108 PSI	1,508 PSI-M S	27.9 M S

   C. APPROVED LOCATION AND STORAGE CAPACITY OF EACH ECM MUST BE DETERMINED BY THE SAFETY OFFICER BASED ON ORIENTATION AND PROXIMITY RELATIVE TO NEARBY FACILITIES/MAGAZINES.

CONSTRUCTION PROCEDURES & SAFETY REQUIREMENTS:

1. THE CONTRACT STRUCTURAL DRAWINGS REPRESENT THE FINISHED STRUCTURE. THEY DO NOT INDICATE THE MEANS OR METHOD OF CONSTRUCTION. PROVIDE ALL MEASURES NECESSARY TO PROTECT THE STRUCTURE, WORKERS OR OTHER PERSONS DURING CONSTRUCTION. SUCH MEASURES MUST INCLUDE, BUT NOT BE LIMITED TO, BRACING, SHORING FOR CONSTRUCTION EQUIPMENT, SHORING FOR THE BUILDING, FORMS, SCAFFOLDING, PLANKING, SAFETY NETS, ETC.
2. THE CONTRACTOR MUST ENGAGE PROPERLY QUALIFIED PERSONS TO DETERMINE WHERE AND HOW TEMPORARY PRECAUTIONARY MEASURES MUST BE USED DURING CONSTRUCTION. THE CONTRACTOR MUST ALSO PROVIDE THEIR OWN THIRD-PARTY INSPECTOR TO REVIEW AND VERIFY INSTALLATION OF ALL TEMPORARY PRECAUTIONARY MEASURES.
3. THE CONTRACTOR MUST SUPERVISE AND DIRECT THE WORK SO AS TO MAINTAIN RESPONSIBILITY FOR COORDINATING THE WORK OF ALL TRADES AND THE CHECKING OF ALL DIMENSIONS. ALL DISCREPANCIES MUST BE CALLED TO THE ATTENTION OF THE CONTRACTING OFFICER AND MUST BE RESOLVED BEFORE PROCEEDING WITH THE WORK.
4. THE CONTRACTOR MUST COMPLY WITH ALL APPLICABLE CITY, COUNTY, STATE, FEDERAL, AND INTERNATIONAL LAWS, INCLUDING THE OCCUPATIONAL SAFETY AND HEALTH ACT (OSHA) AND REGULATIONS ADOPTED PURSUANT THERETO.
5. CONSTRUCTION LOADS INCLUDING MATERIALS MUST NOT EXCEED THE DESIGN LIVE LOAD. PROVIDE ADEQUATE SHORING, RESHORING AND/OR BRACING WHERE REQUIRED.

FOUNDATIONS:

1. THE FOUNDATIONS HAVE BEEN DESIGNED USING THE FOLLOWING ALLOWABLE BEARING PRESSURES:

A. DEAD PLUS LIVE LOAD:	4,000 PSF
B. TOTAL DESIGN LOAD (INCLUDING WIND OR SEISMIC, TRANSIENT LOAD FACTOR = 1.33)	5,300 PSF
C. BLAST DESIGN LOAD (DYNAMIC INCREASE FACTOR = 2.5):	10,000 PSF

2. EARTH COVER MATERIAL TO BE USED AS MAGAZINE COVER AND WITHIN THE EMBANKMENT IS TO BE NON-EXPANSIVE, FREE OF DELETERIOUS MATERIAL AND MEET THE FOLLOWING CHARACTERISTICS:
   A. ALLOWABLE WET SOIL DENSITY: 110 - 120 PCF.
   B. ASTM D2487 CLASSIFICATION: SM, SM-SC, SC
   C. ASTM D1140 MATERIAL FINER THAN #200 SIEVE -MIN. 25%: MAX. 50%
   D. MAXIMUM PARTICLE SIZE: 1"
   E. ASTM D4318: MAX LIQUID LIMIT = 35, MAX PLASTICITY INDEX = 12.
   F. REQUIREMENTS FOR EARTH COVERM FOR ECMS MUST BE IN ACCORDANCE WITH DEFENSE EXPLOSIVES SAFETY REGULATION (DESR) 6055.09 AND UFC 4-420-01.
3. RETAINING WALLS HAVE BEEN DESIGNED USING THE FOLLOWING CRITERIA.

A. PASSIVE EQUIVALENT FLUID PRESSURE:	300 PSF / FT
B. AT-REST LATERAL PRESSURE WITH 2:1 BACKFILL (RESTRAINED):	
a. WITHOUT SEISMIC:	33 PSF / FT
b. WITH SEISMIC	71 PSF / FT
C. CANTILEVERED WALL LATERAL PRESSURE (UNRESTRAINED):	
a. WITHOUT SEISMIC:	40 PSF / FT
b. WITH SEISMIC	102 PSF / FT
D. FRICTION FACTOR BETWEEN SOIL AND CONCRETE PLACED AGAINST SOIL:	0.35
E. FRICTION FACTOR BETWEEN SOIL AND CONCRETE PLACED AGAINST FORMWORK:	0.25
F. MINIMUM SOIL COHESIVE STRENGTH:	500 PSF

FOUNDATIONS: (CONTINUED)

4. SAND MATERIAL USED AS A FREE-DRAINING LAYER AT THE EXTERIOR CONCRETE SURFACES AT THE ROOF PANEL, ENDWALL, AND SIDEWALLS MUST MEET MINIMUM REQUIREMENTS FOR ECMS IN ACCORDANCE WITH DEFENSE EXPLOSIVES SAFETY REGULATION (DESR) 6055.09.
5. FOOTINGS MUST HAVE A MINIMUM WIDTH OF 24 INCHES AND A MINIMUM BOTTOM DEPTH OF 24 INCHES BELOW ADJACENT GRADE. STRUCTURAL DRAWINGS INDICATE GENERAL SLAB ON GRADE AND FOUNDATION PREPARATION. SEE PROJECT SPECIFICATIONS FOR SPECIFIC REQUIREMENTS.
6. STRUCTURAL DRAWINGS INDICATE GENERAL SLAB ON GRADE AND FOUNDATION PREPARATION. SEE PROJECT SPECIFICATIONS FOR SPECIFIC REQUIREMENTS.
7. ALL FILLING, BACKFILLING AND COMPACTING MUST BE PER PROJECT SPECIFICATION. COMPACTION OF SOILS ON TOP OF MAGAZINE MUST BE PERFORMED WITH HAND COMPACTION TOOLS ONLY.
8. EXPANSIVE SOILS MUST NOT BE USED FOR BACKFILL OR FILL. BACKFILL AT RETAINING WALLS MUST CONFORM TO THE PROJECT SPECIFICATIONS.
9. ALL EXCAVATIONS MUST BE PROPERLY BACKFILLED. DO NOT PLACE BACKFILL BEHIND RETAINING WALLS BEFORE CONCRETE HAS ATTAINED FULL DESIGN STRENGTH. CONTRACTOR MUST BRACE OR PROTECT ALL BUILDING AND PIT WALLS BELOW GRADE FROM LATERAL LOADS UNTIL ATTACHING FLOORS ARE COMPLETELY IN PLACE AND HAVE ATTAINED FULL STRENGTH. CONTRACTOR MUST PROVIDE FOR DESIGN, PERMITS AND INSTALLATION OF SUCH BRACING.
10. CONTRACTOR MUST PROVIDE FOR DE-WATERING OF EXCAVATIONS FROM SURFACE WATER, GROUND WATER AND SEEPAGE.
11. CONTRACTOR MUST PROVIDE FOR DESIGN AND INSTALLATION OF ALL CRIBBING, SHEETING, AND SHORING REQUIRED TO SAFELY RETAIN THE EARTH BANKS.
12. EXCAVATION FOR FOUNDATIONS MUST BE APPROVED BY THE CONTRACTING OFFICER PRIOR TO PLACING THE REINFORCING AND CONCRETE.
13. SHALLOW FOOTING FOUNDATIONS MUST BE PLACED AND INSTALLED IN ACCORDANCE WITH THE CONSTRUCTION DRAWINGS AND SPECIFICATIONS PREPARED FOR THE PROJECT.
14. FOUNDATION BACKFILL AND UTILITY TRENCH BACKFILL WITHIN BUILDING AREA MUST BE MECHANICALLY COMPACTED IN LAYERS PER THE SPECIFICATIONS TO THE APPROVAL OF THE CONTRACTING OFFICER. FLOODING WILL NOT BE PERMITTED.
15. NEW FOUNDATIONS MUST BEAR ON APPROVED, UNDISTURBED, NATURAL SUBGRADE SOILS OR ON PROPERLY COMPACTED AND APPROVED FILL MATERIALS PLACED DIRECTLY ABOVE APPROVED SUBGRADES AS INDICATED IN CONSTRUCTION DRAWINGS AND SPECIFICATIONS.

CAST-IN-PLACE CONCRETE:

1. THE DESIGN AND CONSTRUCTION OF REINFORCED CONCRETE MUST CONFORM TO THE ACI BUILDING CODE (ACI 318) AND THE FOLLOWING CODES AND STANDARD SPECIFICATIONS:

A. CONCRETE MIXING	ASTM C94
B. CONCRETE PLACEMENT	ACI 304

2. MATERIAL MUST CONFORM TO ALL OF THE FOLLOWING STANDARD SPECIFICATIONS, LATEST EDITION:

A. PORTLAND CEMENT	ASTM C150, TYPE I OR II
B. CONCRETE AGGREGATES	ASTM C33
C. REINFORCING STEEL	ASTM A615 DEFORMED BARS (GRADE 60)
ASTM A706 GRADE 60 IS NOT EQUIVALENT AND IS NOT ACCEPTABLE.	
D. WELDED WIRE FABRIC (SHEET TYPE ONLY, ROLL TYPE NOT ACCEPTABLE)	ASTM A1064

3. CONCRETE MUST ATTAIN THE FOLLOWING 28-DAY COMPRESSIVE STRENGTHS, UNLESS OTHERWISE INDICATED:

A. ALL STRUCTURAL CONCRETE:	5,000 PSI
B. LEAN CONCRETE	3,000 PSI

4. CHLORIDES OR CHLORIDE SALTS ARE NOT ALLOWED IN THE CONCRETE MIXES.
5. ALL REINFORCING STEEL DETAILING AND PLACEMENT MUST CONFORM TO THE ACI DETAILING MANUAL PUBLICATION SP-66, "BUILDING CODE REQUIREMENTS FOR REINFORCED CONCRETE" ACI-318, AND THE "MANUAL OF STANDARD PRACTICE FOR DETAILING REINFORCED CONCRETE STRUCTURES" ACI-315. PROVIDE ADEQUATE BOLSTERS, HI-CHAIRS, SUPPORT BARS, ETC., TO MAINTAIN SPECIFIED COVER FOR THE ENTIRE LENGTH OF ALL REINFORCING. SECURE ALL REINFORCING BARS, ANCHOR BOLTS AND OTHER CONCRETE INSERTS IN POSITION PRIOR TO PLACING CONCRETE.
6. WELDING OF REINFORCING STEEL IS PROHIBITED.

CAST-IN-PLACE CONCRETE: (CONTINUED)

7. MINIMUM CONCRETE PROTECTION (COVER) FOR REINFORCEMENT MUST BE PROVIDED AS FOLLOWS UNLESS SPECIFICALLY CALLED OUT OTHERWISE IN PLANS AND DETAILS:

A. CONCRETE PLACED AGAINST EARTH.	3 INCH
B. CONCRETE PLACED AGAINST FORM AND LATER EXPOSED TO EARTH OR WEATHER.	2 INCH
C. COLUMNS AND BEAMS (FROM TIE OR STIRRUP)	2 INCH
D. SLAB EXPOSED TO WEATHER OR GROUND.	2 INCH
E. SLABS AND WALLS (NOT EXPOSED TO WEATHER OR GROUND).	3/4 INCH

8. PROJECTING CORNERS OF BEAMS, WALLS, COLUMNS, ETC., MUST BE FORMED WITH 3/4 INCH CHAMFER, UNLESS OTHERWISE NOTED.
9. PROVIDE SLEEVES FOR ELECTRICAL OPENINGS IN CONCRETE BEFORE PLACING. DO NOT CUT ANY REINFORCING WHICH MAY CONFLICT. CORING IN CONCRETE IS NOT PERMITTED EXCEPT AS SHOWN. NOTIFY THE CONTRACTING OFFICER IN ADVANCE IF THE FIELD CONDITIONS DO NOT REFLECT THE CONDITIONS SHOWN ON THE DRAWINGS.
10. CONDUIT OR PIPE SIZE (O.D.) MUST NOT EXCEED 30 PERCENT OF SLAB THICKNESS AND MUST BE PLACED BETWEEN THE TOP AND BOTTOM REINFORCING UNLESS SPECIFICALLY DETAILED OTHERWISE. CONCENTRATIONS OF CONDUITS OR PIPES MUST BE AVOIDED EXCEPT WHERE DETAILED OPENINGS ARE PROVIDED.
11. ALL ROUGHENED SURFACES IN CONCRETE MUST BE MADE WITH A MINIMUM AMPLITUDE OF 1/4 INCH.
12. SEE SHEET S-002 FOR LIGHTWEIGHT CONCRETE MIX DESIGN FOR HIGH SECURITY MAGAZINE DOOR.
13. VERTICAL CONCRETE ELEMENTS LIKE COLUMNS AND PILASTERS, AS WELL AS HORIZONTAL MEMBERS LIKE HEADER BEAMS AND PARAPET BEAMS, ARE GOOD CANDIDATES FOR SELF CONSOLIDATED CONCRETE (SCC). THE CONTRACTOR SHALL CONSIDER THE USE OF SCC FOR THESE ELEMENTS AND/OR ADDITIONAL ELEMENTS IN WHICH REBAR CONGESTION OR ADEQUATE VIBRATORY CONSOLIDATION IS A CONCERN.

STRUCTURAL ABBREVIATIONS:

AB	ANCHOR BOLT	IF	INSIDE FACE
ADD'L	ADDITIONAL	IN	INCH
ALT	ALTERNATE	INTERM	INTERMEDIATE
ACI	AMERICAN CONCRETE INSTITUTE	LP	LOW POINT
APPROX	APPROXIMATE	JT	JOINT
ARCH	ARCHITECTURAL	lb	POUNDS
BM	BEAM	LLH	LONG LEG HORIZONTAL
BMS	BALANCED MAGNETIC SWITCH	LLV	LONG LEG VERTICAL
BOT	BOTTOM	LONGIT	LONGITUDINAL
CI	CAST IRON	MAX	MAXIMUM
CIP	CAST-IN-PLACE	MECH	MECHANICAL
CL	CENTER LINE	MANUF, MFR	MANUFACTURER
CJ	CONSTRUCTION JOINT	MPH	MILES PER HOUR
CLJ	CONTROL JOINT	MIN	MINIMUM
CLR	CLEAR (ANCE)	MISC	MISCELLANEOUS
COL	COLUMN	MTL	METAL
CONC	CONCRETE	NIC	NOT IN CONTRACT
CONN	CONNECTION	NS	NEAR SIDE
CJP	COMPLETE JOINT PENETRATION	NTS	NOT TO SCALE
CONSTR	CONSTRUCTION	OC	ON CENTER
CONT	CONTINUOUS	oz	OUNCES
CONT'D	CONTINUED	OF	OUTSIDE FACE
DBA	DEFORMED BAR ANCHOR	OPNG	OPENING
DBL	DOUBLE	OPP	OPPOSITE
DEG	DEGREE	PJ	PANEL JOINT
DET	DETAIL	PJP	PARTIAL JOINT PENETRATIONS
DIA	DIAMETER	PL	PLATE
DIM	DIMENSION	PN	PART NUMBER
DIST	DISTANCE	PCF	POUNDS PER CUBIC FOOT
DWG	DRAWING	PSF	POUNDS PER SQUARE FOOT
EA	EACH	PSI	POUNDS PER SQUARE INCH
EF	EACH FACE	RAD	RADIUS
EJ	EXPANSION JOINT	REF	REFERENCE
EL	ELEVATION	REINF	REINFORCEMENT
ELECT	ELECTRICAL	REQ'D	REQUIRED
EOR	ENGINEER OF RECORD	SCH/SCHED	SCHEDULE
EQ	EQUAL	SECT	SECTION
ES	EACH SIDE	SHT	SHEET
ETC	ETCETERA	SIM	SIMILAR
EXT	EXTERIOR	SOG	SLAB-ON-GRADE
FDN	FOUNDATION	SPA	SPACE
FL	FLOOR	SPECS	SPECIFICATIONS
FIN	FINISH	SQ	SQUARE
FIN FL	FINISH FLOOR	STL	STEEL
FS	FAR SIDE	SS	STAINLESS STEEL
FT	FOOT OR FEET	STD	STANDARD
FTG	FOOTING	STIFF	STIFFENER
GA	GAUGE	STRUCT	STRUCTURAL
GI	GALVANIZED IRON	T	TOP
GFCI	GROUND-FAULT CIRCUIT INTERRUPTERS	TBD	TO BE DETERMINED
HAS	HEADED ANCHOR STUD	TEMP	TEMPERATURE STEEL
HK	HOOK	THK	THICK
HORIZ, (H)	HORIZONTAL	THRU	THROUGH
HSS	HOLLOW STRUCTURAL SECTION	TOS	TOP OF SLAB, TOP OF STEEL
HSA	HEADED STUD ANCHOR	TYP	TYPICAL
IDS	INTRUSION DETECTION SYSTEM	UFC	UNIFIED FACILITIES CRITERIA
INFO	INFORMATION	UNO	UNLESS NOTED OTHERWISE
INTERM	INTERMEDIATE	VERT, (V)	VERTICAL
ILD	INTERNAL LOCKING DEVICE	W/	WITH
IBC	INTERNATIONAL BUILDING CODE		

THESE DRAWINGS ARE AN EXACT REPLICA OF THE STANDARD MAGAZINE TYPE "G" PROVIDED BY NAVFAC. THE DESIGN WILL BE SITE ADAPTED AND MODIFIED TO MEET THE SPECIFIC GEOTECHNICAL AND LOADING CONDITIONS SPECIFIC TO NAVAL SUBMARINE BASE NEW LONDON, GROTON, CONNECTICUT.

SYM	DESCRIPTION	DATE	APPR

NAVFAC

SEAL

Jacobs
1100 NORTH GLEBE ROAD
SUITE 500
ARLINGTON, VIRGINIA 22201
571.218.1000
FAX: 571.218.1600

A/E INFO

APPROVED
James E. Donahue, Ala
FOR COMMANDER NAVFAC 8/14/2025

ACTIVITY
APPROVED BY LCDR ELIZABETH OLOKODE NAVFAC NLON FEAD DIRECTOR NEW LONDON, GROTON, CT
SATISFACTORY TO DATE 05/27/2025

DES FJ	DRW MR	CHK DW	
PM/DM	SMS/CWJ		
BRANCH MANAGER	NEK		
CHIEF ENG/ARCH	JWJ		
FIRE PROTECTION	HPN		

DEPARTMENT OF THE NAVY
NAVAL FACILITIES ENGINEERING SYSTEMS COMMAND
MID-ATLANTIC
NAVAL FACILITIES ENGINEERING SYSTEMS COMMAND - MID-ATLANTIC
NAVAL STATION - NORFOLK, VA
NAVAL SUBMARINE BASE NEW LONDON
GROTON, CONNECTICUT
P-1102 WEAPONS MAGAZINE & ORDNANCE OPERATIONS FACILITY
TYPE G MAGAZINE
GENERAL STRUCTURAL NOTES

SCALE: NOT TO SCALE
EPROJECT NO.: 1667770
CONSTR. CONTR. NO.
NAVFAC DRAWING NO. 12894155
SHEET 3 OF 91
S-001

FILE NAME: C:\pw_work\dms\dms0033\ch2mhill_09050107\d1710459\S-001.dwg LAYOUT NAME: S-001 - GENERAL STRUCTURAL NOTES PLOTTED: Friday, June 13, 2025 - 9:38am USER: 09050107

STRUCTURAL STEEL:

1. DETAIL, FABRICATE, AND ERECT STRUCTURAL STEEL IN ACCORDANCE WITH THE "AISC SPECIFICATION FOR THE DESIGN, FABRICATION AND ERECTION OF STRUCTURAL STEEL FOR BUILDINGS," LATEST EDITION.

2. CONTRACTOR MUST REVIEW AND APPROVE STRUCTURAL STEEL SHOP DRAWINGS PRIOR TO SUBMITTAL TO THE CONTRACTING OFFICER. DO NOT BEGIN FABRICATION PRIOR TO THE COMPLETION OF THE SHOP DRAWING REVIEW PROCESS.

3. FURNISH STRUCTURAL STEEL THAT IS NEW, CLEAN, STRAIGHT, AND CONFORMING TO THE FOLLOWING STANDARD SPECIFICATION, LATEST EDITION:
   A. STRUCTURAL STEEL WIDE FLANGE: ASTM A992
   B. STRUCTURAL STEEL CHANNELS, ANGLES, S-SHAPES, AND PLATES: ASTM A992 OR ASTM A572, GRADE 50
   C. HOLLOW STRUCTURAL STEEL SECTIONS: ASTM A500, GRADE C
   D. ANCHOR BOLTS: ASTM F1554 (GRADE SPECIFIED AS REQUIRED)
   E. HIGH STRENGTH BOLTS: ASTM F3125 GRADE A325
   F. HEADED STUD ANCHORS: ASTM A29 (TYPE B)
   G. STAINLESS STEEL: ASTM 240, TYPE 304
   H. SUBSTITUTIONS OF STEEL SHAPES IS NOT PERMITTED.

4. STRUCTURAL STEEL MUST CONFORM TO THE FOLLOWING PROPERTIES OR COATINGS:
   A. ALL WELDMENT AND EMBEDMENTS FABRICATED FOR THE DOOR JAMB, HEAD, LOCKING PILASTER, AND TRENCH MUST BE MADE OF TYPE 304 STAINLESS STEEL PER ASTM A240.
   B. ALL DOOR STRUCTURAL STEEL MUST BE PRIMED AND PAINTED AFTER FABRICATION. REFER TO DOOR COATINGS NOTES ON S-002.
   C. ALL OTHER STRUCTURAL STEEL INCLUDING CANOPY FRAMING MUST BE HOT DIP GALVANIZED PER ASTM A123 AND COATED A MINIMUM DRY FILM THICKNESS (DFT) OF 12 MILS IN ACCORDANCE WITH THE FOLLOWING REQUIREMENTS:
      a. PRIMER COAT: SOLVENT-BASED TWO COMPONENT EPOXY ANTI-CORROSIVE PRIMER (3-5 MILS), MPI (THE MASTER PAINTERS INSTITUTE) #101.
      b. INTERMEDIATE COAT: HIGH SOLIDS EPOXY COATING (3-5 MILS). MPI #108.
      c. TOP COAT: HIGH SOLIDS POLYURETHANE COATING (3-5 MILS). MPI #72.
   D. GALVANIZE STRUCTURAL STEEL AFTER FABRICATION WHERE PRACTICAL. REPAIR DAMAGED GALVANIZED COATING USING ASTM A780 ZINC-RICH PAINT. FIELD CUTTING OF ANY HOT-DIP GALVANIZED HARDWARE IS NOT PERMITTED.

5. REPAIR ABRADED AND RUSTED SHOP PAINT WITH SAME PAINT AS SPECIFIED IN STRUCTURAL STEEL NOTE 4C.

6. WELDING MUST COMPLY WITH THE "STRUCTURAL WELDING CODE - STEEL" (AWS D1.1) AND THE "STRUCTURAL WELDING CODE - STAINLESS STEEL" (AWS D1.6). WELD ELECTRODES MUST BE E70XX. PASSIVATION OF STAINLESS STEEL WELDS MUST BE PERFORMED PER ASTM A380. UNLESS OTHERWISE NOTED, MINIMUM WELD SIZE MUST BE 1/4 INCH CONTINUOUS FILLET WELD.

7. UNLESS OTHERWISE NOTED WELD ALL SHOP CONNECTIONS AND BOLT ALL FIELD CONNECTIONS. THE FABRICATOR IS RESPONSIBLE FOR THE DESIGN OF ALL CONNECTIONS, UNLESS OTHERWISE DETAILED.

8. DO NOT CUT OR BURN HOLES IN STRUCTURAL STEEL WITHOUT THE APPROVAL OF THE CONTRACTING OFFICER.

9. SPLICING OF STRUCTURAL STEEL IS NOT PERMITTED WITH THE EXCEPTION OF THE WT MEMBERS SUPPORTING THE TOP OF THE DOOR, NON BLAST RESISTING COMPONENTS, OR MEMBERS APPROVED IN WRITING BY THE CONTRACTING OFFICER.

10. GROUT BELOW BASE PLATES WITH NON-SHRINK GROUT WITH COMPRESSIVE STRENGTH, $f'c = 5{,}000$ PSI.

11. COAT ALL STRUCTURAL STEEL EXPOSED TO SOIL WITH TWO COATS OF COAL TAR EPOXY. EPOXY MUST MEET THE REQUIREMENTS OF PAINT SPECIFIC SSPC-16.

12. BLAST DOOR AND COMPONENTS MUST MEET THE FOLLOWING TOLERANCES.
    A. BLAST DOOR MUST HAVE A TOTAL MAX FLATNESS TOLERANCE OF ±1/4" VERTICALLY AND HORIZONTALLY.
    B. TRENCHES AND DOOR GUIDE RAIL MUST HAVE A ±1/4" MAX DIFFERENTIAL TOLERANCE PER EVERY 37'-0".
    C. POCKET SECURITY PILASTER AND ALL OTHER VERTICAL AND HORIZONTAL DOOR BEARING SURFACES MUST HAVE A ±1/4" MAX TOTAL TOLERANCE.

LIGHTWEIGHT CONCRETE:

1. THE FOLLOWING MIX DESIGN AND CONCRETE MATERIAL PROPERTIES MUST BE USED FOR THE LIGHTWEIGHT CONCRETE LAYER IN THE HIGH SECURITY DOOR:

LIGHTWEIGHT CONCRETE MIX DESIGN

MATERIAL	AMOUNT	UNIT	SPECIFIC GRAVITY	ASTM
LIGHTWEIGHT AGGREGATE	1530	lb	1.38	C331
CEMENT TYPE II	721	lb	3.15	C150
WATER	315	lb	1	C1602
SILICA FUME	82	lb	2.2	C1240
SUPERPLASTICIZER - TYPE A	8	oz*	1.27	C494
SYNTHETIC FIBERS - TYPE III	0.70	lb	0.855	C1116
TOTAL VOLUME	27	cu ft		
oz*/ 100lb OF CEMENTITIOUS MATERIAL				

LIGHTWEIGHT CONCRETE MATERIAL PROPERTY REQUIREMENTS

PROPERTY	AMOUNT	UNIT	ASTM
SLUMP	2 + 1/4	in	C143
MINIMUM DENSITY - UNIT WEIGHT	115	lb/cu ft	C138
STRENGTH (28 DAY MINIMUM)	4000	psi	C39

2. LIGHTWEIGHT AGGREGATES MUST BE DRY.

3. ADJUST WATER AMOUNT TO +/- 0.5 lb SO THAT MIX HOLDS SHAPE WHEN FORMED INTO A BALL IN THE HAND.

4. MIX CAN BE SPLIT FOR VOLUME NEEDED.

5. MIX PROCEDURE:
   A. WEIGH OUT ALL MATERIALS.
   B. IN A SEPARATE CONTAINER, COMBINE AND MIX HALF OF WATER, PLASTICIZER AND ALL FIBERS.
   C. IN ANOTHER SEPARATE CONTAINER, COMBINE AND MIX SILICA FUME AND CEMENT.
   D. POUR WATER WITH PLASTICIZER AND ALL FIBERS INTO MIXER.
   E. POUR LIGHTWEIGHT FINE AGGREGATE INTO MIXER.
   F. SLOWLY ADD SILICA FUME AND CEMENT TO MIXER.
   G. ADD REMAINING WATER ADJUSTING AS NECESSARY (NOTE 3).
   H. ALLOW TO MIX FOR AT LEAST 10 MINUTES.
   I. WHEN MIX IS READY, POUR INTO DOOR CAVITIES OVER REBAR, TO PRESCRIBED DEPTH, ENSURE MIX FILLS ALL AREAS BEHIND REBAR, VIBRATE AS NECESSARY, NO VOIDS ALLOWED.

6. ALLOW CONCRETE TO CURE FOR 14 DAYS BEFORE MOVING DOOR. THE 4X RED OAK AND EXTERIOR PLATES SHALL NOT BE INSTALLED OVER THE CONCRETE DOOR UNTIL TWO OF THE FOLLOWING THREE CONDITIONS OCCUR:
   A. THE MOISTURE CONTENT ON THE SURACE OF THE CONCRETE IS LESS THAN OR EQUAL TO 4.0 PERCENT AS MEASURED BY AN IMPEDANCE TEST PER ASTM F2659.
   B. THE IN-SITU RELATIVE HUMIDITY INSIDE THE CONCRETE IS LESS THAN OR EQUAL TO 75.0 PERCENT AS MEASURED PER ASTM F2170.
   C. 28 DAYS HAVE PASSED SINCE POURING THE CONCRETE.

7. QUESTIONS CAN BE REFERRED TO NAVFAC EXWC DOD LOCK PROGRAM, AND SECURITY, ENGINEERING DIV SH22.

STEEL DECK:

1. THE DESIGN, FABRICATION, ERECTION OF METAL DECKING MUST BE IN ACCORDANCE WITH THE CURRENT EDITION OF THE SDI SPECIFICATIONS AND THE SDI DIAPHRAGM MANUAL

2. STEEL ROOF DECK AND SIDING IS 1 1/2" x 18 GAUGE FACTORY-FINISHED DESIGNED FOR THE DEAD AND LIVE LOADS INDICATED.

3. STEEL ROOF DECK AND SIDING MUST BE ATTACHED TO SUPPORTS WITH #14 STAINLESS STEEL SCREWS AT EACH VALLEY (MINIMUM 5 PER PANEL). PROVIDE AISI 304 STAINLESS STEEL SEALING CAPS WITH BONDED NEOPRENE WASHER OVER EACH FASTENER. USE 1/4-INCH BUTYL TAPE TO SEAL LAPS.

4. THE PLANS INDICATE DECK SPAN DIRECTION.

5. SUSPENDED CEILINGS, LIGHT FIXTURES, DUCTS, AND OTHER UTILITIES MUST NOT BE SUPPORTED FROM THE STEEL DECK.

6. STEEL DECK MUST CONFORM TO THE COATINGS FOR STRUCTURAL STEEL.

BLAST DOOR NOTES:

1. THE BLAST DOOR MANUFACTURER MUST BE SOLELY RESPONSIBLE FOR INSTALLATION AND ERECTION OF THE BLAST DOOR.

2. THE DOOR MANUFACTURER MUST COMMENCE A SHOP DEMONSTRATION OF EACH DOOR IN THE PRESENCE OF A GOVERNMENT OFFICIAL, CONSISTING OF A SUCCESSFUL CYCLE OF OPENING AND CLOSING THE DOOR BY CONTROLS, OPENING AND CLOSING OF TRENCH PLATES BY DOOR PLOWS AND ALIGNMENT OF DOOR IN SECURITY PILASTER. DEMONSTRATION MUST BE A MINIMUM OF HALF THE LENGTH OF THE DOOR TRAVEL. DEMONSTRATION MUST ALSO INCLUDE MANUAL OPERATION OF BLAST DOOR IN BOTH DIRECTIONS. DEMONSTRATION MUST ALSO INCLUDE MANUAL OPERATION OF BLAST DOOR IN BOTH DIRECTIONS. UPON SATISFACTION OF THE GOVERNMENT OFFICIAL REVIEWING THE DOOR DEMONSTRATION(S) AND RECEIPT OF GOVERNMENT APPROVAL LETTER, THE MANUFACTURER WILL BE RELEASED FROM DEMONSTRATING ADDITIONAL DOORS.

3. THE DOOR MANUFACTURER MUST COMMENCE A FIELD DEMONSTRATION OF EACH DOOR IN THE PRESENCE OF A GOVERNMENT OFFICIAL, CONSISTING OF A SUCCESSFUL CYCLE OF OPENING AND CLOSING THE DOOR BY CONTROLS, OPENING AND CLOSING OF TRENCH PLATES BY DOOR PLOWS, LOCKING AND UNLOCKING DOOR, AND ALIGNMENT OF DOOR IN SECURITY PILASTER.

4. THE BLAST DOOR MANUFACTURER MUST HAVE A MINIMUM OF 10 YEARS OF EXPERIENCE IN THE DESIGN, CONSTRUCTION AND INSTALLATION OF DOORS WEIGHING A MINIMUM OF 30 KIPS, CONSISTING OF BOTTOM ROLLING DOORS AND LARGE HEAVY DOORS SUCH AS MAGAZINE BLAST DOORS AND/OR NUCLEAR CONTAINMENT DOORS. THE BLAST DOOR MANUFACTURER MUST SUBMIT PROOF OF EXPERIENCE TO THE CONTRACTING OFFICER FOR APPROVAL BY NAVFAC EXWC AND NAVFAC ATLANTIC. A MINIMUM OF 5 EXAMPLES MUST BE SUBMITTED.

5. PROVIDE STEEL PLATE BOTTOM WHEELS HAVING A MINIMUM TREAD DIAMETER AS REQUIRED FOR THE ACTUAL WHEEL LOADING. CONSTRUCT WHEEL ASSEMBLES TO PERMIT REMOVAL OF THE WHEEL WITHOUT REMOVING THE DOOR LEAF FROM ITS POSITION ON THE RAIL.

6. THE GENERAL CONTRACTOR MUST SELECT A SINGLE SUPPLIER TO PROVIDE A COMPLETE BLAST DOOR SYSTEM INCLUDING BUT NOT LIMITED TO THE BLAST DOOR AND ALL OF ITS ASSOCIATED COMPONENTS AND HARDWARE, RAIL, TRENCH, TRENCH COVER ASSEMBLY, PLOW AND EMBEDDED PLATES.

7. PROVIDE A HAND RELEASE ON THE DESIGNED BRAKING SYSTEM TO RELEASE THE BRAKE WHEN IT BECOMES NECESSARY TO MANUALLY MOVE THE DOOR. PROVIDE AN AUTOMATIC RESET TYPE HAND RELEASE SO THAT THE BRAKE WILL BE OPERABLE DURING SUBSEQUENT ELECTRICAL OPERATIONS OF THE DOOR.

8. BLAST DOOR MANUFACTURER MUST PROVIDE A COMPLETE BLAST DOOR MANUAL THAT INCLUDES MAINTENANCE AND STEP BY STEP INSTRUCTIONS OF WHEEL REMOVAL.

9. THE PLOW/TRENCH COVER ASSEMBLY ALONG WITH THE WHEEL/MOTOR ASSEMBLY ARE NOTIONAL AND SHOWN FOR BIDDING PURPOSES AND MAY VARY BASED ON THE DOOR MANUFACTURER'S APPROVED DESIGN.

DOOR COATINGS:

1. ALL COATINGS AND INSTALLATION OF COATINGS MUST COMPLY WITH:
   A. UFGS - 09 97 13.27.
   B. SHOP COATINGS: SSPC (THE SOCIETY OF PROTECTIVE COATINGS) QP3.
   C. FIELD COATINGS: SSPC QP1 + QS1.
   D. COLOR: LIGHT GRAY.

2. SURFACE PREPARATION:
   A. REMOVE SLAG FROM ALL WELDING SURFACES PRIOR TO CLEANING IN ACCORDANCE WITH NACE SP0178.
   B. SOLVENT CLEAN SURFACE TO BE COATED PRIOR TO ABRASIVE BLASTING IN ACCORDANCE WITH SSPC SP1.
   C. DRY ABRASIVE BLAST TO NEAR WHITE FINISH IN ACCORDANCE WITH SSPC SP10. BLAST PROFILE MUST BE 1-3 MILS TOOTH HEIGHT.

3. PAINT SYSTEMS:
   A. TOTAL COATING DRY FILM THICKNESS (DFT): 12 MILS.
   B. PRIMER COAT: ABRASION RESISTANT INORGANIC ZINC SILICATE PRIMER (3-5 MILS). SSPC PAINT 20, TYPE IC, LEVEL 1, WITH AT LEAST 85% ZINC IN DRY FILM.
   C. INTERMEDIATE COAT: HIGH SOLIDS EPOXY COATING (3-5 MILS). MPI #108.
   D. TOP COAT: HIGH SOLIDS POLYURETHANE COATING (3-5 MILS). MPI #72.

4. ALL SURFACES OF ALL DOOR COMPONENTS MUST BE SOLVENT CLEANED, DRY ABRASIVE BLASTED, AND ZINC RICH PRIMER COATED. PRIOR TO FULLY ASSEMBLING OR FABRICATING DOOR, CLEAN AND PRIMER SURFACES THAT WILL BECOME INACCESSIBLE AFTER DOOR IS ASSEMBLED. THE DOOR MUST NOT BE GALVANIZED. EPOXY INTERMEDIATE AND POLYURETHANE TOP COATS MUST BE APPLIED TO ALL EXTERIOR SURFACES OF THE FULLY-ASSEMBLED DOOR.

MECHANICAL MATERIALS

1. LOUVERS MUST BE CONSTRUCTED OF 16 GAUGE GALVANIZED STEEL WITH 4" DEEP FRAME. BLADES MUST BE 16 GAUGE GALVANIZED STEEL POSITIONED AT APPROXIMATELY 37.5 DEGREES DOWN FROM THE HORIZONTAL AND SPACED APPROXIMATELY 6" ON CENTER. SCREEN MUST BE 19 GAUGE GALVANIZED 1/4" MESH. APPROXIMATELY 50% FREE AREA.

2. VENTILATORS MUST BE CONSTRUCTED OF MINIMUM 24 GAUGE GALVANIZED STEEL AND MUST BE DESIGNED FOR A SUSTAINED WIND SPEED OF 132 MPH.

3. FIRE DAMPER FUSIBLE LINKS MUST HAVE A MELTING POINT OF 160 TO 165 DEGREES FAHRENHEIT. BREAKING STRENGTH MUST BE SUITABLE FOR LOADS IMPOSED BY COUNTERWEIGHTS.

4. PIPE FLANGE GASKETS MUST BE OF NON-ASBESTOS MATERIAL IN ACCORDANCE WITH ASME B16.21. GASKETS MUST BE FLAT, 1/16 INCH THICK, AND CONTAIN ARAMID FIBERS BONDED WITH STYRENE BUTADIENE RUBBER. FLANGE FASTENERS MUST BE TYPE 316 STAINLESS STEEL.

5. PROVIDE A DIELETRIC INSULATOR WHEREVER DISSIMILAR METALS CONTACT EACH OTHER.

6. PIPES UTILIZED FOR AIR MOVEMENT BETWEEN THE MECHANICAL ROOM AND MAGAZINE MUST BE ASTM A312 TP316 STAINLESS STEEL. PIPE FLANGES MUST BE IN ACCORDANCE WITH ASTM B16.5 AND ASTM A182 F316 STAINLESS STEEL.

ELECTRICAL BONDING & GROUNDING

1. ALL STEEL LOUVERS, VENTILATORS, GUARDRAILS, DOORS AND FRAMES MUST BE ELECTRICALLY BONDED TO THE MAGAZINE REINFORCING CAGE.

2. ALL STRUCTURAL AND MISCELLANEOUS ITEMS EMBEDDED IN CONCRETE MUST BE ELECTRICALLY BONDED TO THE REINFORCING CAGE BY WIRE TIES.

3. THE REINFORCING CAGE MUST BE MADE ELECTRICALLY CONTINUOUS BY WIRE TIES AT A MINIMUM OF 48 INCH ON CENTERS IN EVERY DIRECTION, REFER TO DETAIL A1 ON DRAWING E-504.

4. ALL WALLS AND CONSTRUCTION JOINTS MUST BE ELECTRICALLY BONDED. SEE THE ELECTRICAL DRAWINGS FOR DETAILS.

5. ALL STRUCTURAL STEEL AND REINFORCING STEEL MUST BE GROUNDED TO THE SECONDARY GROUND. SEE THE ELECTRICAL DRAWINGS FOR DETAILS.

6. BURIED OR EMBEDDED ITEMS MUST BE DOCUMENTED WITH PHOTOS AT INTERVALS OF 20 FEET.

PLUMBING MATERIALS

1. FLOOR DRAIN FIXTURES MUST CONSIST OF A CAST IRON BODY, NICKEL BRONZE ADJUSTABLE TOP, 6" ROUND STRAINER, FLASHING COLLAR, AND SURFACE MEMBRANE CLAMP. PROVIDE WITH DEEP SEAL TRAP AND BARRIER-TYPE TRAP SEAL PROTECTION DEVICE CONFORMING TO ASSE 1072 WHERE CONNECTING TO SANITARY SEWER SYSTEM.

2. UNDERGROUND DRAINAGE PIPING MUST CONSIST ASTM D2665 SCH 40 PVC SOLID CORE PIPING WITH DWV PATTERN FITTINGS. PERFORATED DRAIN PIPING MUST INCLUDE 1/2" DIAMETER HOLES SPACED 5" O.C. IN TWO ROWS 120 DEGREES APART PER ASTM D2729. ALL PERFORATED DRAIN PIPING MUST BE INSTALLED WITH HOLES FACING DOWN.

3. PREFABRICATED TRENCH DRAINS MUST BE 6" WIDE, SHALLOW, PRECAST POLYESTER CONCRETE CHANNEL OF INTERLOCKING DESIGN. 3" OUTLETS. DUCTILE IRON EDGE RAIL AND EXTRA HEAVY DUTY, DIN19580 LOAD CLASS E DUCTILE IRON SLOTTED TOP GRATE FASTENED TO RAIL. GRATE SLOTS MUST BE NO WIDER THAN 1/4" OR PROVIDE STAINLESS STEEL MESH SCREEN FASTENED TO BOTTOM OF GRATES. MESH OPENINGS MUST BE NO LARGER THAN 1/4" TO MITIGATE RODENT ENTRY.

THESE DRAWINGS ARE AN EXACT REPLICA OF THE STANDARD MAGAZINE TYPE "G" PROVIDED BY NAVFAC. THE DESIGN WILL BE SITE ADAPTED AND MODIFIED TO MEET THE SPECIFIC GEOTECHNICAL AND LOADING CONDITIONS SPECIFIC TO NAVAL SUBMARINE BASE NEW LONDON, GROTON, CONNECTICUT.

SYM	DESCRIPTION	DATE	APPR

NAVFAC

SEAL

Jacobs
1100 NORTH GLEBE ROAD
SUITE 500
ARLINGTON, VIRGINIA 22201
571.218.1000
FAX: 571.218.1600

A/E INFO

APPROVED
FOR COMMANDER NAVFAC 8/14/2025

ACTIVITY
APPROVED BY LCDR ELIZABETH OLOKODE NAVFAC NLON FEAD DIRECTOR NEW LONDON, GROTON, CT

SATISFACTORY TO DATE 05/27/2025

DES FJ	DRW MR	CHK DW	
PM/DM	SMS/CWJ		
BRANCH MANAGER	NEK		
CHIEF ENG/ARCH	JWJ		
FIRE PROTECTION	HPN		

DEPARTMENT OF THE NAVY
NAVAL FACILITIES ENGINEERING SYSTEMS COMMAND
MID-ATLANTIC

NAVAL FACILITIES ENGINEERING SYSTEMS COMMAND - MID-ATLANTIC
NAVAL STATION - NORFOLK, VA

NAVAL SUBMARINE BASE NEW LONDON
GROTON, CONNECTICUT

P-1102 WEAPONS MAGAZINE & ORDNANCE OPERATIONS FACILITY
TYPE G MAGAZINE

GENERAL STRUCTURAL NOTES

SCALE: NOT TO SCALE
EPROJECT NO.: 1667770
CONSTR. CONTR. NO.
NAVFAC DRAWING NO. 12894156
SHEET 4 OF 91

S-002

FILE NAME: C:\pw_workdir\dms0033\ch2mhill_00950107\d1710459\S-002.dwg LAYOUT NAME: S-002 - GENERAL STRUCTURAL NOTES PLOTTED: Friday, June 13, 2025 - 9:38am USER: 00950107

SPECIAL INSPECTION SCHEDULE / VERIFICATION			
ITEM	EXTENT OF INSPECTION	REFERENCE	COMMENT / SCOPE
CONCRETE CONSTRUCTION			
REINFORCING STEEL PLACEMENT	P	ACI 318: 26.6.2	INSPECT SIZE, SPACING, COVER, POSITIONING AND GRADE OF REINFORCING STEEL. VERIFY THAT REINFORCING BARS ARE FREE OF FORM OIL OR OTHER DELETERIOUS MATERIALS. INSPECT BAR LAPS AND MECHANICAL SPLICES. VERIFY THAT BARS ARE ADEQUATELY TIED AND SUPPORTED ON CHAIRS OR BOLSTERS. WELDING OF REINFORCEMENT IN STRUCTURAL CONCRETE IS NOT ALLOWED WITHOUT APPROVAL.
CONCRETE PLACEMENT	C	ACI 318: 26.5.2	INSPECT PLACEMENT OF CONCRETE. VERIFY THAT CONCRETE CONVEYANCE AND DEPOSITING AVOIDS SEGREGATION OR CONTAMINATION. VERIFY THAT CONCRETE IS PROPERLY CONSOLIDATED.
SAMPLING AND TESTING OF CONCRETE	C	ASTM C 172; ASTM C 31; ACI 318: 26.12	TEST CONCRETE COMPRESSIVE STRENGTH, SLUMP, AIR-CONTENT AND TEMPERATURE
CURING AND PROTECTION	P	ACI 318: 26.5.3-26.5.5	INSPECT CURING, COLD WEATHER PROTECTIONS AND HOT WEATHER PROTECTION PROCEDURES.
FORMWORK	P	ACI 318: 26.11	INSPECT FLATWORK FOR SHAPE, LOCATION AND DIMENSIONS OF THE CONCRETE MEMBER BEING FORMED.
DOOR CONSTRUCTION			
FABRICATOR CERTIFICATION/ QUALITY CONTROL PROCEDURES	S		REVIEW OF FABRICATOR'S QUALITY CONTROL PROCEDURES OR AISC CERTIFICATION.
FABRICATION INSPECTION	P		INSPECT IN-PLACE FABRICATION, OR REVIEW FABRICATOR'S APPROVED INDEPENDENT INSPECTION AGENCY'S REPORTS
SHOP DEMONSTRATION	C		SEE BLAST DOOR NOTES
SPECIAL ITEMS RELATED TO THE OTHER EXPLOSIVES SAFETY RELATED ITEMS			
REBAR FARADAY-SHIELD	P	DWG EG201; E-501; E-504	INSPECT REINFORCING STEEL TO ENSURE ELECTRICAL CONTINUITY BETWEEN THE CAP, WALLS, SLAB AND FOUNDATION THROUGH CRIMPED CONNECTIONS. DOCUMENT CONNECTIONS WITH PHOTOS AND CONTINUITY TEST. ALL CRIMPED CONNECTIONS MUST BE INSPECTED PRIOR TO CONCRETE PLACEMENT.
ECM GROUNDING	P	DWGS EG201; E-501; E-504	VISUALLY INSPECT TO ENSURE ECM FOUNDATION IS BONDED TO THE GROUNDING SYSTEM. DOCUMENT WITH PHOTOS.
GROUNDING SYSTEM	P	DWGS EG201; E-501; E-504, DA PAM 385-64, 16-30.	VISUALLY INSPECT GROUNDING SYSTEM CONDUCTORS TO ENSURE NO DAMAGE, BREAKAGE, OR CORROSION HAS OCCURRED TO THE CONDUCTORS DURING INSTALL AND BEFORE EARTH BURIAL DOCUMENT WITH PHOTOS.
INDIVIDUAL BONDS	P	DWGS EG201; E-501; E-504, NFPA 780, 8.9; DA PAM 385-64,16-30.	INSPECT ALL BONDS FOR LOOSE CONNECTIONS THAT MIGHT RESULT IN HIGH-RESISTANCE CONNECTIONS.
LPS COMPONENTS	P	NFPA 780, 8.9; DA PAM 385-64, 16-30	INSPECT LPS COMPONENTS FOR SECURE MOUNTING AND PROTECTION AGAINST ACCIDENTAL MECHANICAL DISPLACEMENT AND TO ENSURE NO DAMAGE, BREAKAGE, OR CORROSION HAS OCCURRED.
LPS TESTING	S	NFPA 780, 8.9 DA PAM 385-64, 16-31	PERFORM BONDING TEST ACROSS EACH BOND, AND AN EARTH ELECTRODE TEST OF THE LPS.
EARTH COVER	P	DWGS S-301	INSPECT DEPTH GAUGES ON ROOF PRIOR TO EARTH COVER PLACEMENT FOR SIZE AND STABILITY. INSPECT EARTH COVER DEPTH AND SLOPE TO ENSURE A 2'-0" MINIMUM IS PROVIDED ABOVE STRUCTURE.
DOOR CONTACT POINTS	C	DWGS S-205, S-505	INSPECT BEARING SURFACE AT TOP OF DOOR FRAME AND THE TRENCH AT THE BOTTOM OF THE DOOR.
MISCELLANEOUS EMBEDDED AND ATTACHED ITEMS (DOORS, FRAMES, TRENCHES, ETC)	P		INSPECT EMBEDDED AND ATTACHED ITEMS TO ENSURE THEY ARE BONDED TO THE GROUNDING SYSTEM. DOCUMENT WITH PHOTOS.
ADDITIONAL INSPECTIONS THAT MUST BE PERFORMED PER CHAPTER 17 OF THE IBC.			
STEEL CONSTRUCTION	P	IBC SEC 1705.2	
CONCRETE CONSTRUCTION	C	IBC SEC 1705.3	
SOILS	C	IBC SEC 1705.6	
DRIVEN DEEP FOUNDATIONS	P	IBC SEC 1705.7	
CAST-IN-PLACE DEEP FOUNDATIONS	P	IBC SEC 1705.8	
HELICAL PILE FOUNDATIONS	P	IBC SEC 1705.9	
FABRICATED ITEMS	P	IBC SEC 1705.11	
SPECIAL INSPECTIONS FOR WIND RESISTANCE	P	IBC SEC 1705.12	
SPECIAL INSPECTIONS FOR SEISMIC RESISTANCE	P	IBC SEC 1705.13	
TESTING FOR SEISMIC RESISTANCE	P	IBC SEC 1705.14	
ADDITIONAL SPECIAL INSPECTIONS			
TOLERANCES	C	SEE SPECIFICATIONS	

SPECIAL INSPECTION NOTES:

1. INSPECTION INTERVALS ARE AS FOLLOWS:
   - C – CONTINUOUS: THE FULL-TIME OBSERVATION OF WORK REQUIRING SPECIAL INSPECTION BY AN APPROVED SPECIAL INSPECTOR WHO IS PRESENT IN THE AREA WHERE THE WORK IS BEING PERFORMED.
   - P – PERIODIC: THE PART-TIME OR INTERMITTENT OBSERVATION OF WORK REQUIRING SPECIAL INSPECTION BY AN APPROVED SPECIAL INSPECTOR WHO IS PRESENT IN THE AREA WHERE THE WORK HAS BEEN OR IS BEING PERFORMED AND AT THE COMPLETION OF THE WORK.
   - S – SUBMITTAL
2. STRUCTURAL TEST AND SPECIAL INSPECTIONS ARE BASED ON CHAPTER 17 OF THE IBC, UFC 3-301-01 AND UFC-420-01.
3. CONTRACTOR MUST HIRE A QUALIFIED INSPECTION AND TESTING AGENCY TO PERFORM SPECIAL INSPECTIONS AND TESTING IN ACCORDANCE WITH THE IBC. SUBMIT INSPECTION REPORTS TO THE CONTRACTING OFFICER FOR EACH DAY SPECIAL INSPECTIONS AND TESTING ARE PERFORMED.
4. THE SPECIAL INSPECTIONS LISTED IN THIS TABLE ARE TO BE USED IN CONJUNCTION WITH ALL SPECIAL INSPECTION REQUIREMENTS PER THE IBC SHOWN.
5. THE CONTRACTOR MUST EMPLOY ONE OR MORE APPROVED AGENCIES TO PERFORM INSPECTIONS DURING CONSTRUCTION ON THE TYPES OF WORK LISTED UNDER SECTION 1705 OF THE IBC REQUIRING VERIFICATION AND INSPECTION. THE CONTRACTING OFFICER MUST ATTEND ALL OBSERVATIONS. THESE INSPECTIONS ARE IN ADDITION TO THE INSPECTIONS DEFINED IN SECTION 110. THE INSPECTING AGENCY MUST PROVIDE REPORTS OF THE SPECIAL INSPECTIONS DIRECTLY TO THE GOVERNMENT.

THESE DRAWINGS ARE AN EXACT REPLICA OF THE STANDARD MAGAZINE TYPE "G" PROVIDED BY NAVFAC. THE DESIGN WILL BE SITE ADAPTED AND MODIFIED TO MEET THE SPECIFIC GEOTECHNICAL AND LOADING CONDITIONS SPECIFIC TO NAVAL SUBMARINE BASE NEW LONDON, GROTON, CONNECTICUT.

SYM	DESCRIPTION	DATE	APPR

NAVFAC

SEAL

Jacobs
1100 NORTH GLEBE ROAD
SUITE 500
ARLINGTON, VIRGINIA 22201
571.218.1000
FAX: 571.218.1600

A/E INFO

APPROVED
FOR COMMANDER NAVFAC 8/14/2025

ACTIVITY
APPROVED BY LCDR ELIZABETH OLOKODE NAVFAC NLON FEAD DIRECTOR NEW LONDON, GROTON, CT

SATISFACTORY TO DATE 05/27/2025

DES	FJ	DRW	MR	CHK	DW
PM/DM	SMS/CWJ				
BRANCH MANAGER	NEK				
CHIEF ENG/ARCH	JWJ				
FIRE PROTECTION	HPN				

DEPARTMENT OF THE NAVY
NAVAL FACILITIES ENGINEERING SYSTEMS COMMAND
MID-ATLANTIC
NAVAL FACILITIES ENGINEERING SYSTEMS COMMAND - MID-ATLANTIC
NAVAL STATION - NORFOLK, VA
NAVAL SUBMARINE BASE NEW LONDON
GROTON, CONNECTICUT
P-1102 WEAPONS MAGAZINE & ORDNANCE OPERATIONS FACILITY
TYPE G MAGAZINE
GENERAL STRUCTURAL NOTES

SCALE: NOT TO SCALE
EPROJECT NO.: 1667770
CONSTR. CONTR. NO.
NAVFAC DRAWING NO. 12894157
SHEET 5 OF 91
S-003

FILE NAME: C:\pw_workdir\dms0033\ch2mhill_09050107\d1710459\S-003.dwg LAYOUT NAME: S-003 - GENERAL STRUCTURAL NOTES PLOTTED: Friday, June 13, 2025 - 9:38am USER: 09050107

SITE SPECIFIC DATA*:

1. SITE SPECIFIC WIND DATA:
   - A. SITE SPECIFIC ULTIMATE WIND SPEED: 136 MPH
   - B. EXPOSURE: "C"
   - C. RISK CATEGORY: III

2. SITE SPECIFIC SIESMIC DATA:
   - A. RISK CATEGORY: III
   - B. IMPORTANCE FACTOR: 1.25
   - C. SIESMIC DESIGN CATEGORY: B
   - D. SITE SEISMICITY: SS = 0.19g, S1 = 0.052g
   - E. SITE CLASS: D

3. SNOW DESIGN DATA:
   - A. GROUND SNOW LOAD: 30 PSF
   - B. EXPOSURE FACTOR: 1.0
   - C. IMPORTANCE FACTOR" 1.10
   - D. THERMAL FACTOR: 1.2

4. ENVIRONMENTAL SEVERITY CLASSIFICATION.
   - A. ESC C4

* – SITE SPECIFIC DATA INCLUDED FOR INFORMATION ONLY. REFER TO S–001 FOR PARAMETERS USED IN THE DESIGN AND DEVELOPMENT OF THE STANDARIZED DRAWINGS

SITE SPECIFIC GEOTECHNICAL DATA:

1. FOUNDATION DESIGN IS IN ACCORDANCE WITH THE RECOMMENDATIONS OF THE GEOTECHNICAL ENGINEERING REPORT PREPARED BY JACOBS, DATED 07 FEBRUARY 2025

2. FOUNDATION SYSTEMS:

   TYPE G–001

   PLACE FOUNDATIONS ON REINFORCED AND COMPACTED ENGINEERED FILL OVER CEMENTITIOUS RIGID INCLUSIONS (GROUND IMPROVEMENT SYSTEM), REFER TO CIVIL PLANS SHEET B–101, GROUND IMPROVEMENT PLANS FOR ADDITIONAL REQUIREMENTS. GROUND IMPROVEMENT SYSTEM MUST CREATE A FOUNDATION SUBGRADE WITH THE MINIMUM BEARING CAPACITY AS NOTED ON S–001 AND A MAXIMUM ALLOWABLE SETTLEMENT OF 3/4".

   TYPE G–002

   PLACE FOUNDATIONS PARTIALLY ON OVEREXCAVATED AREA USING CRUSHED AGGREGATE OVER BEDROCK AND PARTIALLY ON REINFORCED AND COMPACTED ENGINEERING FILL OVER CEMENTITIOUS REGID INCLUSIONS (GROUND IMPROVEMENT SYSTEM). REFER TO CIVIL PLANS SHEET B–101, GROUND IMPROVEMENT SYSTEM MUST CREATE A FOUNDATION SUBGRADE WITH THE MINIMUM BEARING CAPACITY AS NOTED ON S–001 AND A MAXIMUM ALLOWABLE SETTLEMENT OF 3/4".

3. PROVIDE MEASURES TO PREVENT WATER, FROST OR ICE FROM PENETRATING FOOTING OR SLAB SUBGRADE BEFORE PLACING CONCRETE. FOOTINGS, MUD SLABS, OR BUILDING SLABS MUST NOT BE PLACED INTO OR AGAINST SUBGRADE CONTAINING FREE WATER, FROST, OR ICE.

4. CONCRETE FOUNDATIONS OR A 3" THICK CONCRETE MUD MAT (LEAN CONCRETE) MUST BE PLACED THE SAME DAY THE SUBGRADE IS INSPECTED. IF THE GROUND SURFACE IS DISTURBED BEFORE CONCRETE IS PLACED, THE SUBGRADE MUST BE RE–INSPECTED BY THE CONTRACTOR'S GEOTECHNICAL ENGINEER AT NO ADDITIONAL COST.

5. DESIGN, PROVIDE AND MAINTAIN DEWATERING SYSTEMS, EARTH RETENTION SYSTEMS, BRACING. PROTECT EXISTING STRUCTURES AND UTILITIES DURING CONSTRUCTION.

6. WHEN FILLING AGAINST OPPOSITE SIDES OF A WALL OR STRUCTURE, BACKFILL IN LIFTS THAT MAINTAIN LEVEL ELEVATIONS WITHIN 12" ON BOTH SIDES TO BALANCE THE LATERAL PRESSURE.

7. EARTHWORK, INCLUDING FOUNDATION SUBGRADE, FILL AND BACKFILL MUST BE INSPECTED AND APPROVED BY THE CONTRACTOR'S GEOTECHNICAL ENGINEER.

8. WHERE EXCAVATION WOULD BE BELOW A LINE EXTENDING UPWARD AT A 1.0 H TO 1.0 V SLOPE FROM THE BOTTOM OF A FOUNDATION OR UTILITY, PROVIDE SHEETING, SHORING, AND BRACING. DO NOT UNDERMINE EXISTING CONSTRUCTION.

SYM	DESCRIPTION	DATE	APPR

NAVFAC

LAURA ARICO PRESLEY REGISTERED ENGINEER AGRICULTURE COMMERCE No. 106382 STATE OF TENNESSEE 06/27/2025

SEAL

Jacobs
1100 NORTH GLEBE ROAD
SUITE 500
ARLINGTON, VIRGINIA 22201
571.218.1000
FAX: 571.218.1600

A/E INFO

APPROVED
FOR COMMANDER NAVFAC 8/14/2025

ACTIVITY
APPROVED BY LCDR ELIZABETH OLOKODE NAVFAC NLON FEAD DIRECTOR NEW LONDON, GROTON, CT

SATISFACTORY TO DATE 05/27/2025

DES	JH	DRW	JT	CHK	LP

PM/DM	SMS/CWJ
BRANCH MANAGER	NEK
CHIEF ENG/ARCH	JWJ
FIRE PROTECTION	HPN

DEPARTMENT OF THE NAVY
NAVAL FACILITIES ENGINEERING SYSTEMS COMMAND
MID-ATLANTIC

NAVAL FACILITIES ENGINEERING SYSTEMS COMMAND - MID-ATLANTIC
NAVAL STATION - NORFOLK, VA

NAVAL SUBMARINE BASE NEW LONDON

GROTON, CONNECTICUT

P-1102 WEAPONS MAGAZINE & ORDNANCE OPERATIONS FACILITY
TYPE G MAGAZINE

GENERAL STRUCTURAL NOTES

SCALE:
EPROJECT NO.: 1667770
CONSTR. CONTR. NO.
NAVFAC DRAWING NO.
12894158
SHEET 6 OF 91

S-004S

FILE NAME: C:\pw_workdir\pw0033\ch2mhill_09050107\d1710459\S-004S.dwg LAYOUT NAME: S-004S PLOTTED: Friday, June 13, 2025 – 9:39am USER: 09050107

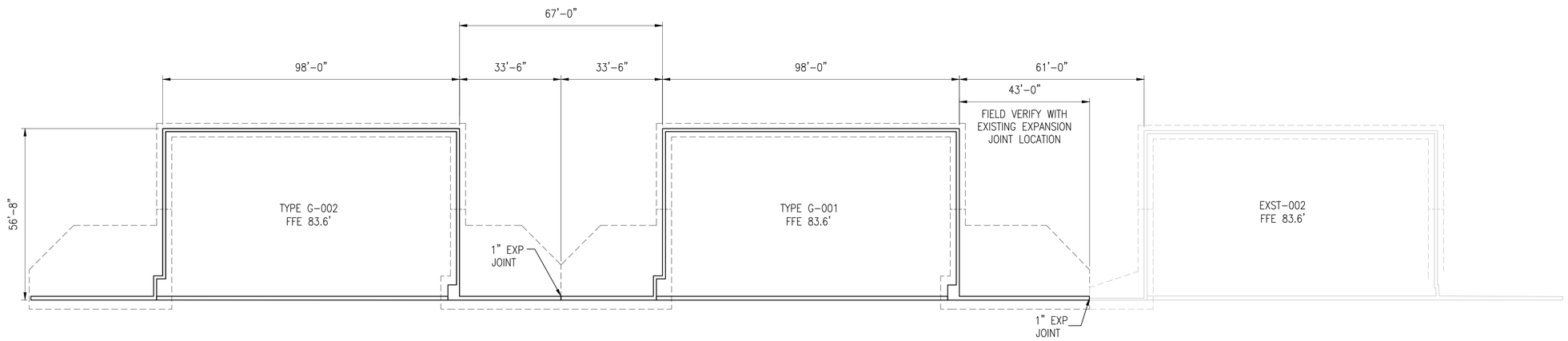

OVERALL PLAN

SCALE: 1" = 20'

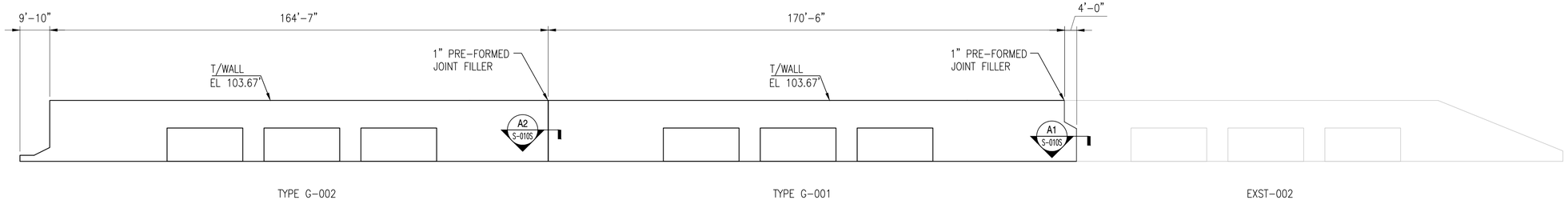

HEADWALL ELEVATION

SCALE: 1" = 20'

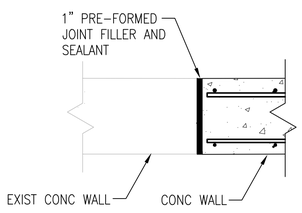

SECTION A1

SCALE: NTS S-010S

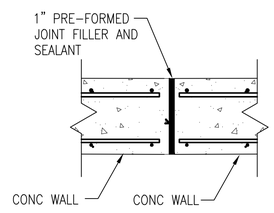

SECTION A2

SCALE: NTS S-010S

GENERAL NOTES

1. SEE SHEET S-001, S-002, S-003, AND S-004S FOR GENERAL NOTES.

GRAPHIC SCALE:

1"=20'-0" 0' 5' 20' 40' 60'

SYM	DESCRIPTION	DATE	APPR

NAVFAC

LAURA ARICO PRESLEY REGISTERED ENGINEER AGRICULTURE COMMERCE No. 106382 STATE OF TENNESSEE 08/14/2025

SEAL

Jacobs
1100 NORTH GLEBE ROAD
SUITE 500
ARLINGTON, VIRGINIA 22201
571.218.1000
FAX: 571.218.1600

A/E INFO

APPROVED
FOR COMMANDER NAVFAC 8/14/2025

ACTIVITY
APPROVED BY LCDR ELIZABETH OLOKODE NAVFAC NLON FEAD DIRECTOR NEW LONDON, GROTON, CT

SATISFACTORY TO DATE 05/27/2025

DES	SB	DRW	JC	CHK	LAP

PM/DM	SMS/CWJ
BRANCH MANAGER	NEK
CHIEF ENG/ARCH	JWJ
FIRE PROTECTION	HPN

DEPARTMENT OF THE NAVY
NAVAL FACILITIES ENGINEERING SYSTEMS COMMAND
MID-ATLANTIC

NAVAL FACILITIES ENGINEERING SYSTEMS COMMAND
NAVAL STATION - NORFOLK, VA
MID-ATLANTIC

NAVAL SUBMARINE BASE NEW LONDON
GROTON, CONNECTICUT

P-1102 WEAPONS MAGAZINE & ORDNANCE OPERATIONS FACILITY
TYPE G MAGAZINE

OVERALL PLAN - SITE ADAPTED

SCALE:	AS SHOWN
EPROJECT NO.:	1667770
CONSTR. CONTR. NO.	
NAVFAC DRAWING NO.	12894159
SHEET	7 OF 91

S-010S

FILE NAME: C:\pw_workdir\dms003\jb2mhill_09050107\d1710459\S-010S.dwg LAYOUT NAME: S-010S PLOTTED: Friday, June 13, 2025 - 9:39am USER: 09050107

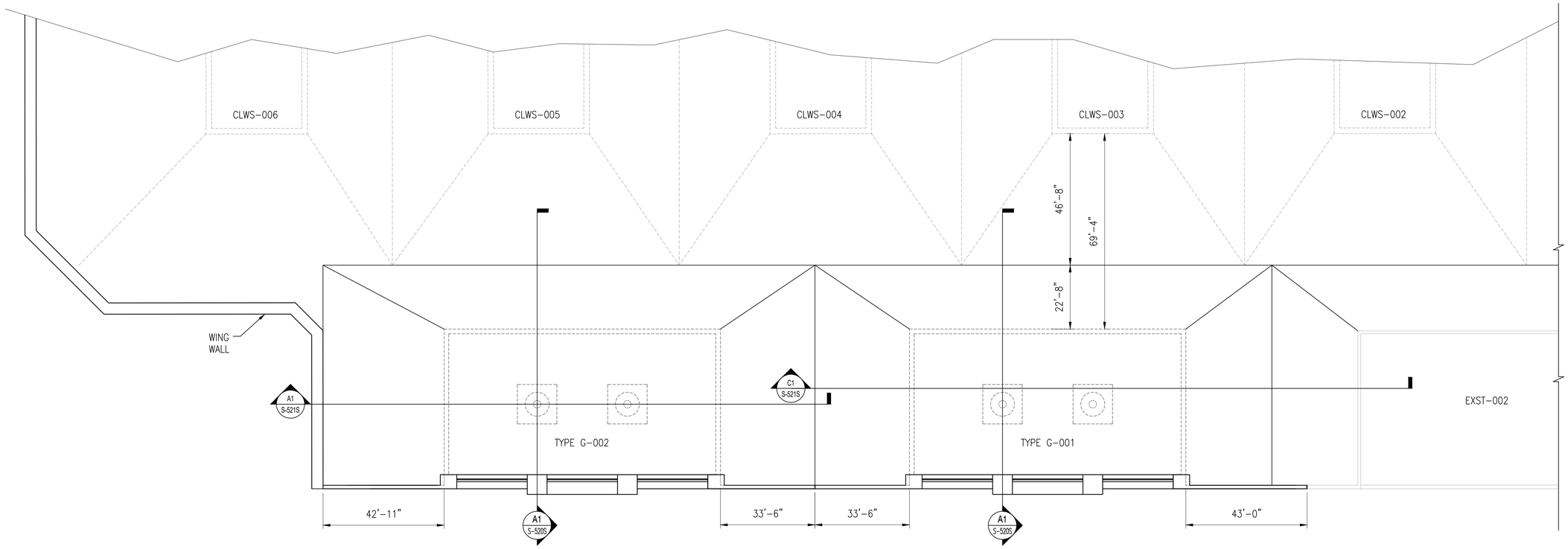

OVERALL PLAN - EPDM COVERAGE

SCALE: 1" = 20'

GENERAL NOTES

1. SEE SHEET S-001, S-002, S-003, AND S-004S FOR GENERAL NOTES.

GRAPHIC SCALE:

1"=20'-0" 0' 5' 20' 40' 60'

SYM	DESCRIPTION	DATE	APPR.

NAVFAC

LAURA ARICO PRESLEY
REGISTERED ENGINEER
AGRICULTURE
COMMERCE
No. 106362
STATE OF TENNESSEE
06/27/2025
SEAL

Jacobs
1100 NORTH GLEBE ROAD
SUITE 500
ARLINGTON, VIRGINIA 22201
571.218.1000
FAX: 571.218.1600

A/E INFO

APPROVED
FOR COMMANDER NAVFAC 8/14/2025

ACTIVITY
APPROVED BY LCDR ELIZABETH OLOKODE NAVFAC NLON FEAD DIRECTOR NEW LONDON, GROTON, CT

SATISFACTORY TO DATE 05/27/2025

DES	SB	DRW	JC	CHK	LAP

PM/DM	SMS/CWJ
BRANCH MANAGER	NEK
CHIEF ENG/ARCH	JWJ
FIRE PROTECTION	HPN

DEPARTMENT OF THE NAVY
NAVAL FACILITIES ENGINEERING SYSTEMS COMMAND
MID-ATLANTIC

NAVAL FACILITIES ENGINEERING SYSTEMS COMMAND - MID-ATLANTIC
NAVAL STATION - NORFOLK, VA

NAVAL SUBMARINE BASE NEW LONDON
GROTON, CONNECTICUT
P-1102 WEAPONS MAGAZINE & ORDNANCE OPERATIONS FACILITY
TYPE G MAGAZINE

EPDM COVER LAYOUT - SITE ADAPTED

SCALE:
EPROJECT NO.: 1667770
CONSTR. CONTR. NO.
NAVFAC DRAWING NO. 12894160
SHEET 8 OF 91

S-011S

FILE NAME: C:\pw_workdir\dms003\jcb2mhill_09050107\d1710459\S-011S.dwg LAYOUT NAME: S-011S PLOTTED: Friday, June 13, 2025 - 9:39pm USER: 09050107

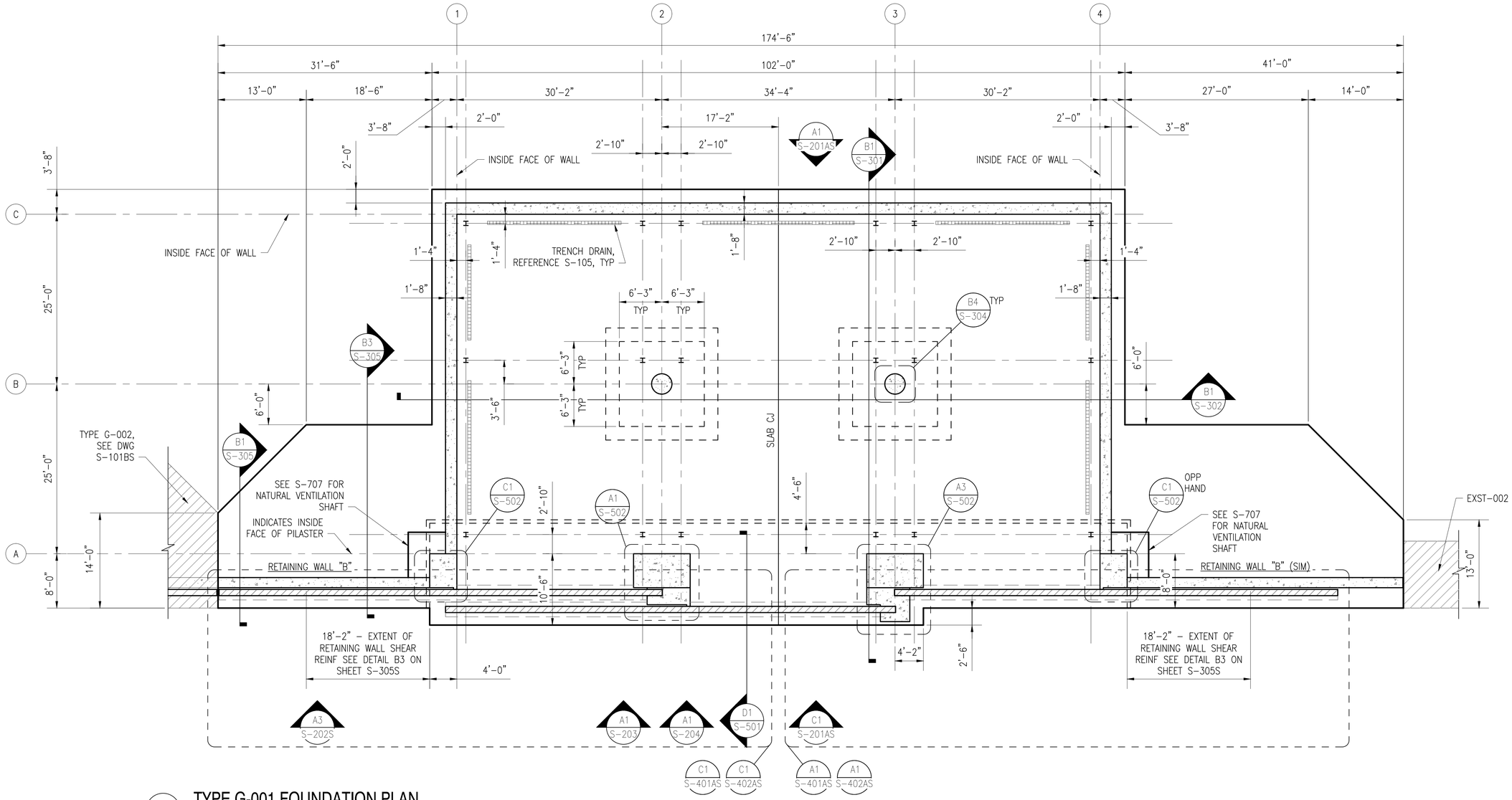

A1 TYPE G-001 FOUNDATION PLAN

SCALE: 1/8" = 1'-0"

0 4' 8' 16'

SHEET NOTES:

1. ALL ELEVATIONS ARE IN REFERENCE TO A DATUM ELEVATION OF 0'-0" FOR MAGAZINE FINISHED FLOOR ELEVATION. SEE CIVIL DRAWINGS FOR ACTUAL ELEVATIONS.
2. SEE SHEET S-001, S-002, S-003, AND S-004S FOR GENERAL NOTES.
3. ALL REINFORCING STEEL MUST BE CONTINUOUSLY BONDED AND GROUNDED PER S-002 AND A1/E-504.
4. SLAB ON GRADE CONSTRUCTION JOINTS ARE INDICATED AS "CJ" ON PLAN. SEE STANDARD DETAIL ON S-512 FOR CONSTRUCTION JOINT DETAILS.
5. BLAST DOOR IS NOT SHOWN FOR CLARITY.
6. SEE SHEET S-102 FOR ARRANGEMENT OF SLAB REINFORCING.
7. SEE SHEET S-105 FOR FOUNDATION DRAINAGE FLOOR PLAN.
8. CONCRETE SLAB MUST BE MOIST CURED FOR A MINIMUM OF 14 DAYS.

THESE DRAWINGS HAVE BEEN ADAPTED FROM APPROVED NAVFAC MUNITIONS STORAGE CONSTRUCTION DOCUMENTS, NAVFAC DRAWING NUMBERS 14145656 TO 14145704, DATED 24 SEPT 2024. JACOBS DOR RESPONSIBILITY AND SEAL APPLICABILITY IS LIMITED TO THE SITE ADAPTATIONS AND MODIFICATIONS MADE TO THIS DRAWING.

SYM	DESCRIPTION	DATE	APPR.

NAVFAC

SEAL: LAURA ARICO PRESLEY, REGISTERED ENGINEER, AGRICULTURE, COMMERCE, No. 106304, STATE OF TENNESSEE, 06/11/2025

Jacobs
1100 NORTH GLEBE ROAD
SUITE 500
ARLINGTON, VIRGINIA 22201
571.218.1000
FAX: 571.218.1600

A/E INFO

APPROVED: FOR COMMANDER NAVFAC 8/14/2025

ACTIVITY: APPROVED BY LCDR ELIZABETH OLOKODE NAVFAC NLON FEAD DIRECTOR NEW LONDON, GROTON, CT

SATISFACTORY TO DATE: 05/27/2025

DES	FJ	DRW MR	CHK DW
PM/DM	SMS/CWJ		
BRANCH MANAGER	NEK		
CHIEF ENG/ARCH	JWJ		
FIRE PROTECTION	HPN		

DEPARTMENT OF THE NAVY
NAVAL FACILITIES ENGINEERING SYSTEMS COMMAND
MID-ATLANTIC

NAVAL FACILITIES ENGINEERING SYSTEMS COMMAND - MID-ATLANTIC
NAVAL STATION - NORFOLK, VA

NAVAL SUBMARINE BASE NEW LONDON — GROTON, CONNECTICUT

P-1102 WEAPONS MAGAZINE & ORDNANCE OPERATIONS FACILITY
TYPE G MAGAZINE

FOUNDATION PLAN

SCALE: 1/8" = 1'-0"
EPROJECT NO.: 1667770
CONSTR. CONTR. NO.
NAVFAC DRAWING NO. 12894161
SHEET 9 OF 91

S-101AS

FILE NAME: C:\pw_workdir\dms0033\ch2mhill_09050107\d1711045\9\S-101AS.dwg LAYOUT NAME: S-101AS - FOUNDATION PLAN PLOTTED: Friday, June 13, 2025 - 9:40am USER: 09050107

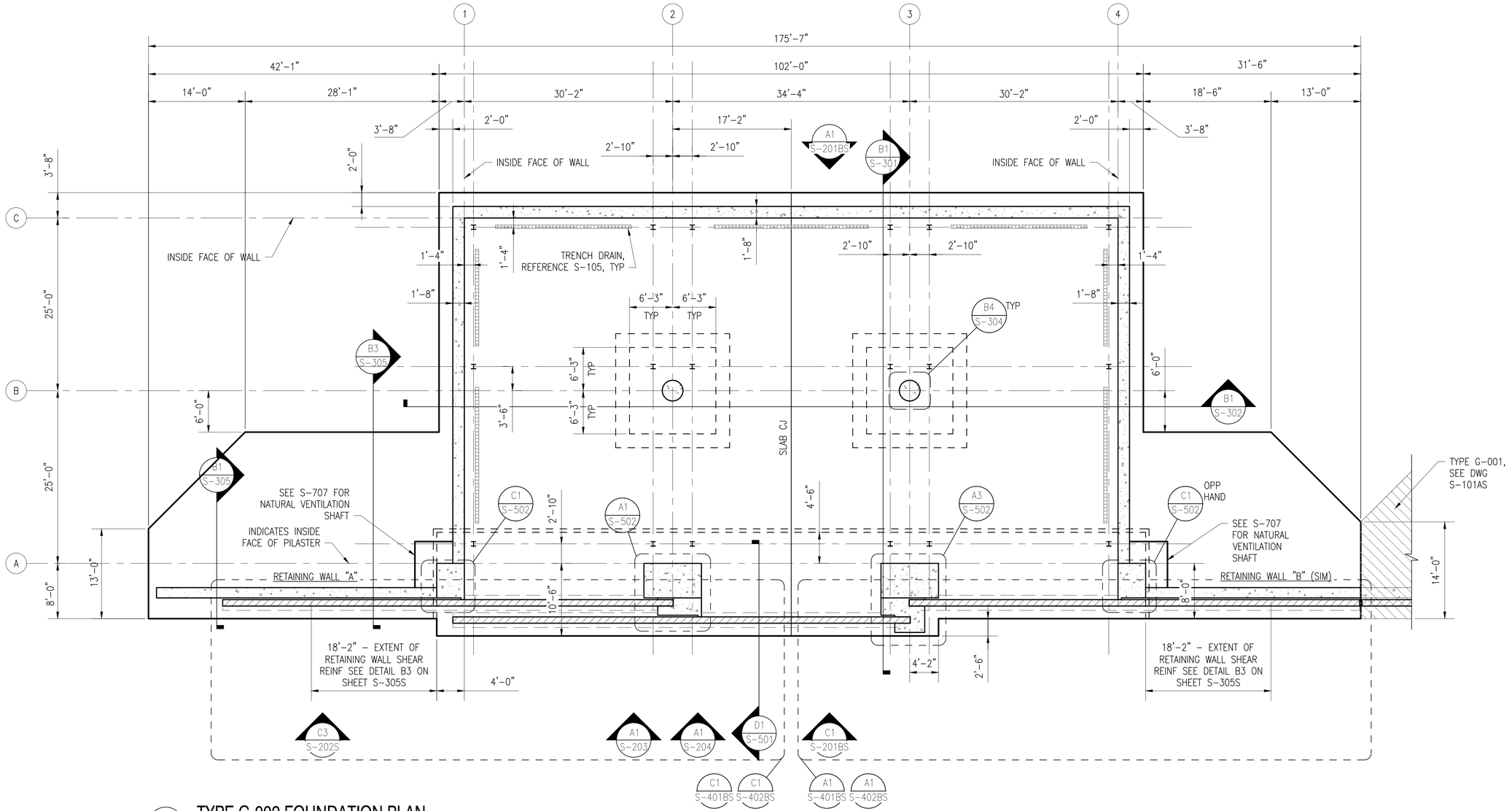

A1 TYPE G-002 FOUNDATION PLAN

SCALE: 1/8" = 1'-0"

0 4' 8' 16'

SHEET NOTES:

1. ALL ELEVATIONS ARE IN REFERENCE TO A DATUM ELEVATION OF 0'-0" FOR MAGAZINE FINISHED FLOOR ELEVATION. SEE CIVIL DRAWINGS FOR ACTUAL ELEVATIONS.
2. SEE SHEET S-001, S-002, S-003, AND S-004S FOR GENERAL NOTES.
3. ALL REINFORCING STEEL MUST BE CONTINUOUSLY BONDED AND GROUNDED PER S-002 AND A1/E-504.
4. SLAB ON GRADE CONSTRUCTION JOINTS ARE INDICATED AS "CJ" ON PLAN. SEE STANDARD DETAIL ON S-512 FOR CONSTRUCTION JOINT DETAILS.
5. BLAST DOOR IS NOT SHOWN FOR CLARITY.
6. SEE SHEET S-102 FOR ARRANGEMENT OF SLAB REINFORCING.
7. SEE SHEET S-105 FOR FOUNDATION DRAINAGE FLOOR PLAN.
8. CONCRETE SLAB MUST BE MOIST CURED FOR A MINIMUM OF 14 DAYS.

THESE DRAWINGS HAVE BEEN ADAPTED FROM APPROVED NAVFAC MUNITIONS STORAGE CONSTRUCTION DOCUMENTS, NAVFAC DRAWING NUMBERS 14145656 TO 14145704, DATED 24 SEPT 2024. JACOBS DOR RESPONSIBILITY AND SEAL APPLICABILITY IS LIMITED TO THE SITE ADAPTATIONS AND MODIFICATIONS MADE TO THIS DRAWING.

SYM	DESCRIPTION	DATE	APPR

NAVFAC

LAURA ARICO PRESLEY REGISTERED ENGINEER AGRICULTURE COMMERCE No. 106304 STATE OF TENNESSEE 06/27/2025 SEAL

Jacobs
1100 NORTH GLEBE ROAD
SUITE 500
ARLINGTON, VIRGINIA 22201
571.218.1000
FAX: 571.218.1600

A/E INFO

APPROVED
FOR COMMANDER NAVFAC 8/14/2025

ACTIVITY
APPROVED BY LCDR ELIZABETH OLOKODE NAVFAC NLON FEAD DIRECTOR NEW LONDON, GROTON, CT

SATISFACTORY TO DATE 05/27/2025

DES	FJ	DRW MR	CHK DW
PM/DM			SMS/CWJ
BRANCH MANAGER			NEK
CHIEF ENG/ARCH			JVJ
FIRE PROTECTION			HPN

DEPARTMENT OF THE NAVY
NAVAL FACILITIES ENGINEERING SYSTEMS COMMAND
MID-ATLANTIC

NAVAL FACILITIES ENGINEERING SYSTEMS COMMAND - MID-ATLANTIC
NAVAL STATION - NORFOLK, VA

NAVAL SUBMARINE BASE NEW LONDON
GROTON, CONNECTICUT
P-1102 WEAPONS MAGAZINE & ORDNANCE OPERATIONS FACILITY
TYPE G MAGAZINE

FOUNDATION PLAN

SCALE: 1/8" = 1'-0"
EPROJECT NO.: 1667770
CONSTR. CONTR. NO.
NAVFAC DRAWING NO. 12894162
SHEET 10 OF 91

S-101BS

FILE NAME: C:\pw_workdir\den003\ch2mhill_09050107\d1710459\S-101BS.dwg LAYOUT NAME: S-101BS – FOUNDATION PLAN PLOTTED: Friday, June 13, 2025 – 9:40am USER: 09050107

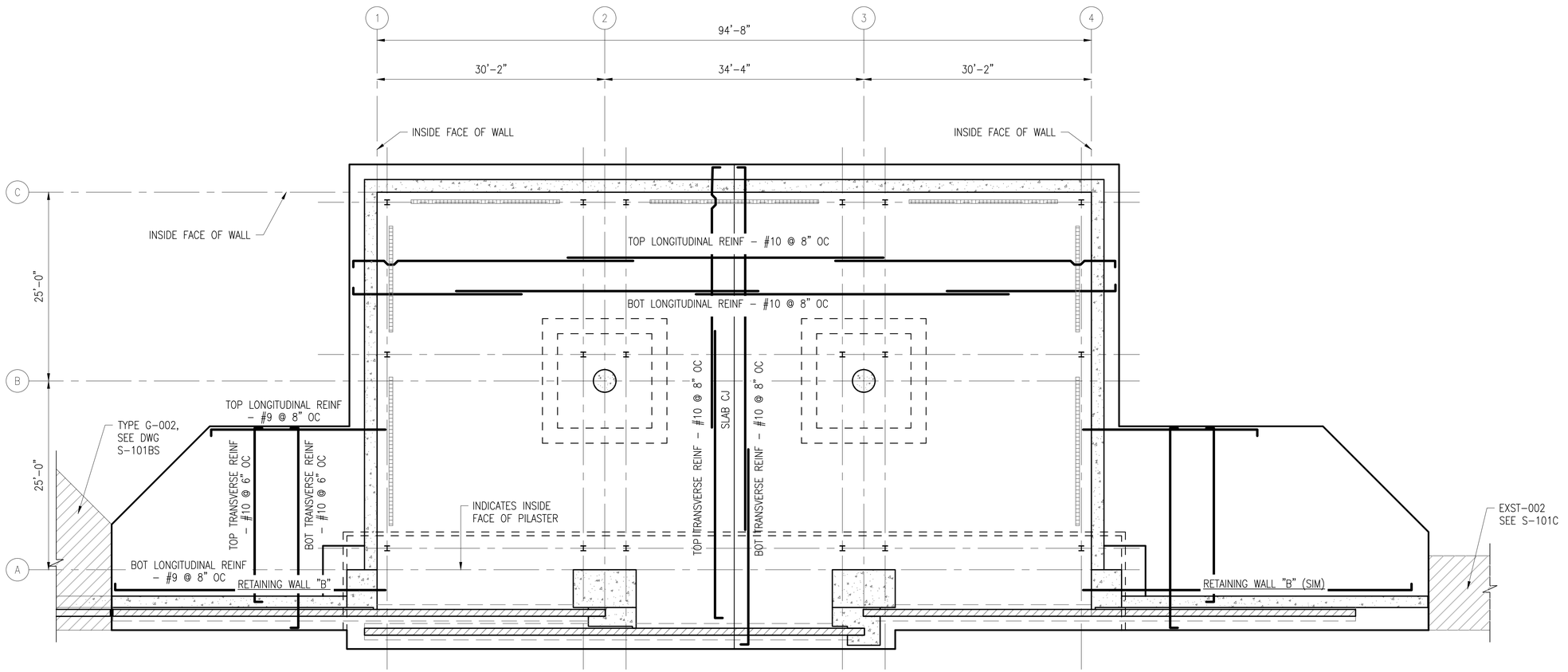

A1 TYPE G-001 FLOOR SLAB REINFORCING PLAN

SCALE: 1/8" = 1'-0"

0 4' 8' 16'

SHEET NOTES:

1. ALL ELEVATIONS ARE IN REFERENCE TO A DATUM ELEVATION OF 0'-0" FOR MAGAZINE FINISHED FLOOR ELEVATION. SEE CIVIL DRAWINGS FOR ACTUAL ELEVATIONS.
2. SEE SHEET S-001, S-002, S-003, AND S-004S FOR GENERAL NOTES.
3. ALL REINFORCING STEEL MUST BE CONTINUOUSLY BONDED AND GROUNDED PER S-002 AND A1/E-504.
4. SLAB ON GRADE CONSTRUCTION JOINTS ARE INDICATED AS "CJ" ON PLAN. SEE STANDARD DETAIL ON S-512 FOR CONSTRUCTION JOINT DETAILS.
5. BLAST DOOR IS NOT SHOWN FOR CLARITY.
6. SEE SHEET S-105 FOR FOUNDATION DRAINAGE FLOOR PLAN.

THESE DRAWINGS HAVE BEEN ADAPTED FROM APPROVED NAVFAC MUNITIONS STORAGE CONSTRUCTION DOCUMENTS, NAVFAC DRAWING NUMBERS 14145656 TO 14145704, DATED 24 SEPT 2024. JACOBS DOR RESPONSIBILITY AND SEAL APPLICABILITY IS LIMITED TO THE SITE ADAPTATIONS AND MODIFICATIONS MADE TO THIS DRAWING.

SYM	DESCRIPTION	DATE	APPR.

NAVFAC

LAURA ARICO PRESLEY REGISTERED ENGINEER AGRICULTURE COMMERCE No. 106304 STATE OF TENNESSEE 06/13/2025

SEAL

Jacobs
1100 NORTH GLEBE ROAD
SUITE 500
ARLINGTON, VIRGINIA 22201
571.218.1000
FAX: 571.218.1600
A/E INFO

APPROVED

FOR COMMANDER NAVFAC 8/14/2025

ACTIVITY
APPROVED BY LCDR ELIZABETH OLOKODE NAVFAC NLON FEAD DIRECTOR NEW LONDON, GROTON, CT

SATISFACTORY TO DATE 05/27/2025

DES	FJ	DRW	MR	CHK	DW
PM/DM	SMS/CWJ				
BRANCH MANAGER	NEK				
CHIEF ENG/ARCH	JWJ				
FIRE PROTECTION	HPN				

DEPARTMENT OF THE NAVY
NAVAL FACILITIES ENGINEERING SYSTEMS COMMAND
MID-ATLANTIC

NAVAL FACILITIES ENGINEERING SYSTEMS COMMAND - MID-ATLANTIC
NAVAL STATION - NORFOLK, VA

NAVAL SUBMARINE BASE NEW LONDON
GROTON, CONNECTICUT

P-1102 WEAPONS MAGAZINE & ORDNANCE OPERATIONS FACILITY
TYPE G MAGAZINE

FLOOR SLAB REINFORCING PLAN

SCALE: 1/8" = 1'-0"
EPROJECT NO.: 1667770
CONSTR. CONTR. NO.
NAVFAC DRAWING NO. 12894163
SHEET 11 OF 91

S-102AS

FILE NAME: C:\pw_workdir\dms0033\ch2mhill_09050107\d1710459\S-102AS.dwg LAYOUT NAME: S-102AS - FLOOR SLAB REINFORCING PLAN PLOTTED: Friday, June 13, 2025 - 9:40am USER: 09050107

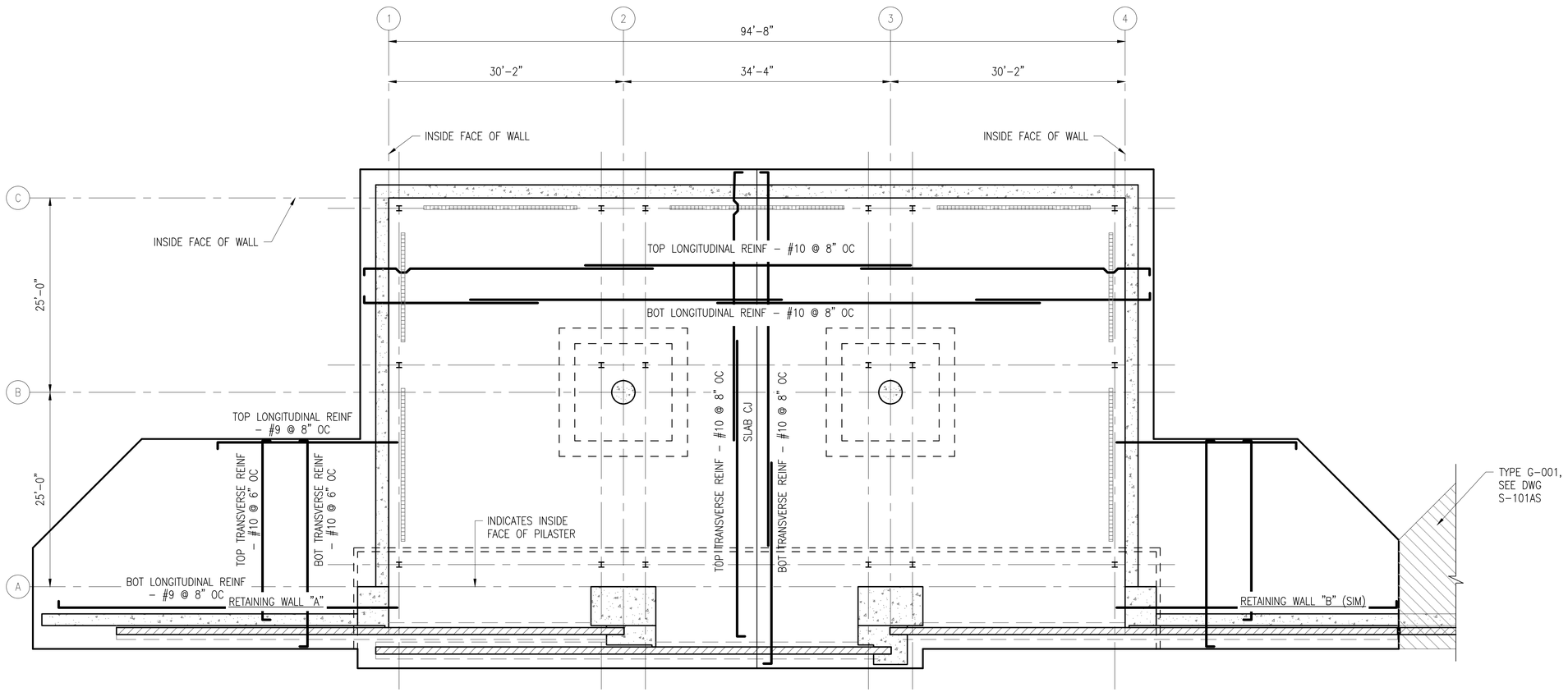

A1 TYPE G-002 FLOOR SLAB REINFORCING PLAN

SCALE: 1/8" = 1'-0"

0 4' 8' 16'

SHEET NOTES:

1. ALL ELEVATIONS ARE IN REFERENCE TO A DATUM ELEVATION OF 0'-0" FOR MAGAZINE FINISHED FLOOR ELEVATION. SEE CIVIL DRAWINGS FOR ACTUAL ELEVATIONS.
2. SEE SHEET S-001, S-002, S-003, AND S-004S FOR GENERAL NOTES.
3. ALL REINFORCING STEEL MUST BE CONTINUOUSLY BONDED AND GROUNDED PER S-002 AND A1/E-504.
4. SLAB ON GRADE CONSTRUCTION JOINTS ARE INDICATED AS "CJ" ON PLAN. SEE STANDARD DETAIL ON S-512 FOR CONSTRUCTION JOINT DETAILS.
5. BLAST DOOR IS NOT SHOWN FOR CLARITY.
6. SEE SHEET S-105 FOR FOUNDATION DRAINAGE FLOOR PLAN.

THESE DRAWINGS HAVE BEEN ADAPTED FROM APPROVED NAVFAC MUNITIONS STORAGE CONSTRUCTION DOCUMENTS, NAVFAC DRAWING NUMBERS 14145656 TO 14145704, DATED 24 SEPT 2024. JACOBS DOR RESPONSIBILITY AND SEAL APPLICABILITY IS LIMITED TO THE SITE ADAPTATIONS AND MODIFICATIONS MADE TO THIS DRAWING.

SYM	DESCRIPTION	DATE	APPR.

NAVFAC

LAURA ARICO PRESLEY REGISTERED ENGINEER AGRICULTURE COMMERCE No. 106304 STATE OF TENNESSEE 06/13/2025

SEAL

Jacobs
1100 NORTH GLEBE ROAD
SUITE 500
ARLINGTON, VIRGINIA 22201
571.218.1000
FAX: 571.218.1600

A/E INFO

APPROVED

FOR COMMANDER NAVFAC 8/14/2025

ACTIVITY
APPROVED BY LCDR ELIZABETH OLOKODE NAVFAC NLON FEAD DIRECTOR NEW LONDON, GROTON, CT

SATISFACTORY TO DATE 05/27/2025

DES	FJ	DRW	MR	CHK	DW
PM/DM	SMS/CWJ				
BRANCH MANAGER	NEK				
CHIEF ENG/ARCH	JWJ				
FIRE PROTECTION	HPN				

DEPARTMENT OF THE NAVY
NAVAL FACILITIES ENGINEERING SYSTEMS COMMAND
MID-ATLANTIC

NAVAL FACILITIES ENGINEERING SYSTEMS COMMAND - MID-ATLANTIC
NAVAL STATION - NORFOLK VA

NAVAL SUBMARINE BASE NEW LONDON
GROTON, CONNECTICUT

P-1102 WEAPONS MAGAZINE & ORDNANCE OPERATIONS FACILITY
TYPE G MAGAZINE

FLOOR SLAB REINFORCING PLAN

SCALE: 1/8" = 1'-0"
EPROJECT NO.: 1667770
CONSTR. CONTR. NO.
NAVFAC DRAWING NO. 12894164
SHEET 12 OF 91

S-102BS

FILE NAME: C:\pw_workdir\den003\ch2mhill_09050107\d1710459\S-102BS.dwg LAYOUT NAME: S-102BS - FLOOR SLAB REINFORCING PLAN PLOTTED: Friday, June 13, 2025 - 9:41am USER: 09050107

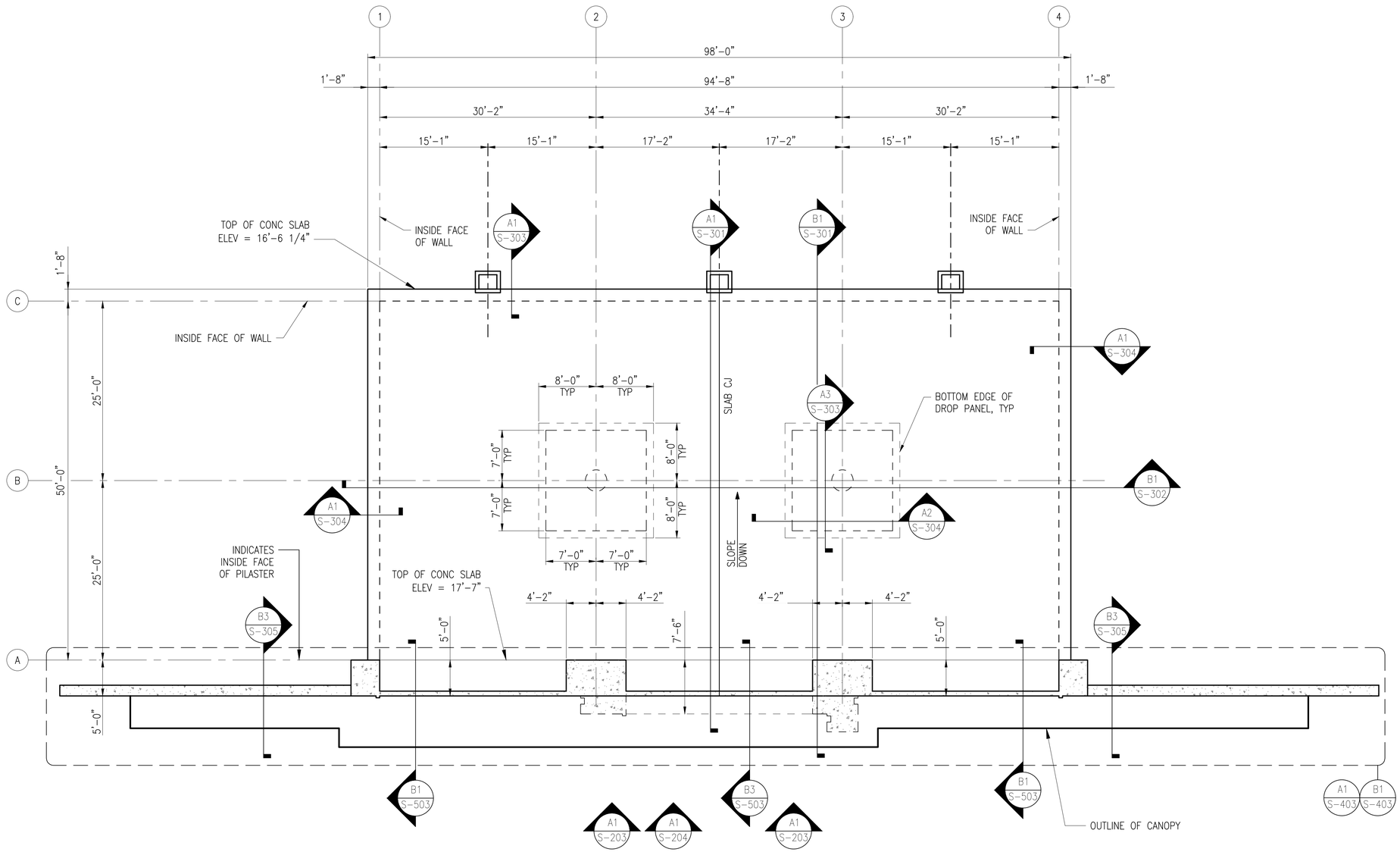

A1 ROOF FRAMING PLAN

SCALE: 1/8" = 1'-0"

0 4' 8' 16'

SHEET NOTES:

1. ALL ELEVATIONS ARE IN REFERENCE TO A DATUM ELEVATION OF 0'-0" FOR MAGAZINE FINISHED FLOOR ELEVATION. SEE CIVIL DRAWINGS FOR ACTUAL ELEVATIONS.
2. SEE SHEET S-001, S-002, S-003, AND S-004S FOR GENERAL NOTES.
3. ALL REINFORCING STEEL MUST BE CONTINUOUSLY BONDED AND GROUNDED PER S-002 AND A1/E-504.
4. CONCRETE SLAB MUST BE MOIST CURED FOR A MINIMUM OF 14 DAYS.
5. SEE S-512 FOR CONCRETE SLAB CONSTRUCTION JOINT DETAILS.

THESE DRAWINGS ARE AN EXACT REPLICA OF THE STANDARD MAGAZINE TYPE "G" PROVIDED BY NAVFAC. THE DESIGN WILL BE SITE ADAPTED AND MODIFIED TO MEET THE SPECIFIC GEOTECHNICAL AND LOADING CONDITIONS SPECIFIC TO NAVAL SUBMARINE BASE NEW LONDON, GROTON, CONNECTICUT.

SYM	DESCRIPTION	DATE	APPR.

NAVFAC

SEAL

Jacobs
1100 NORTH GLEBE ROAD
SUITE 500
ARLINGTON, VIRGINIA 22201
571.218.1000
FAX: 571.218.1600

A/E INFO

APPROVED
FOR COMMANDER NAVFAC 3/14/2025

ACTIVITY
APPROVED BY LCDR ELIZABETH OLOKODE NAVFAC NLON FEAD DIRECTOR NEW LONDON, GROTON, CT
SATISFACTORY TO DATE 05/27/2025

DES FJ	DRW MR	CHK DW	
PM/DM	SMS/CWJ		
BRANCH MANAGER	NEK		
CHIEF ENG/ARCH	JWJ		
FIRE PROTECTION	HPN		

DEPARTMENT OF THE NAVY
NAVAL FACILITIES ENGINEERING SYSTEMS COMMAND
MIDATLANTIC
NAVAL FACILITIES ENGINEERING SYSTEMS COMMAND - MID-ATLANTIC
NAVAL STATION - NORFOLK, VA
NAVAL SUBMARINE BASE NEW LONDON
GROTON, CONNECTICUT
P-1102 WEAPONS MAGAZINE & ORDNANCE OPERATIONS FACILITY
TYPE G MAGAZINE
ROOF FRAMING PLAN

SCALE: 1/8" = 1'-0"
EPROJECT NO.: 1667770
CONSTR. CONTR. NO.
NAVFAC DRAWING NO. 12894165
SHEET 13 OF 91
S-103

FILE NAME: C:\pw_workdir\dms0031\ch2mhill_09050107\d1711045R\S-103.dwg LAYOUT NAME: S-103 - ROOF FRAMING PLAN PLOTTED: Friday, June 13, 2025 - 9:41am USER: 09050107

EAST/WEST				
CALLOUT	BAR SIZE	# OF BARS	CONTINUOUS OR DISCONTINUOUS	DISTRIBUTED WIDTH*
W2	#4	12	CONTINUOUS	5'–8"
W3	#4	9	CONTINUOUS	4'–4"
M3–1	#7	25	CONTINUOUS	12'–8"
		5	DISCONTINUOUS	
M3–2	#6	25	CONTINUOUS	12'–8"
M3–3	#6	25	CONTINUOUS	20'–4"
		3	DISCONTINUOUS	
M3–4	#5	25	CONTINUOUS	12'–8
		5	DISCONTINUOUS	
M4–1	#7	28	CONTINUOUS	14'–0"
		5	DISCONTINUOUS	
M4–2	#6	28	CONTINUOUS	14'–0"
M4–3	#6	28	CONTINUOUS	13'–8"
		3	DISCONTINUOUS	
M4–4	#5	28	CONTINUOUS	14'–0"
		5	DISCONTINUOUS	
C2–1	#7	29	CONTINUOUS	13'–4"
		3	DISCONTINUOUS	
C2–2	#7	29	CONTINUOUS	13'–4"
C2–3	#7	29	CONTINUOUS	14'–0"
		10	DISCONTINUOUS **	
C2–4	#6	29	CONTINUOUS	13'–4"
		4	DISCONTINUOUS	

NORTH/SOUTH				
CALLOUT	BAR SIZE	# OF BARS	CONTINUOUS OR DISCONTINUOUS	DISTRIBUTED WIDTH*
W1	#4	12	CONTINUOUS	5'–8"
M1–1	#6	34	CONTINUOUS	17'–10"
		3	DISCONTINUOUS	
M1–2	#5	34	CONTINUOUS	17'–10"
M1–3	#5	34	CONTINUOUS	17'–6"
		1	DISCONTINUOUS	
M1–4	#4	34	CONTINUOUS	17'–10"
		9	DISCONTINUOUS	
M1–5	#4	34	CONTINUOUS	17'–10"
		15	DISCONTINUOUS	
M2–1	#6	38	CONTINUOUS	21'–0"
		3	DISCONTINUOUS	
M2–2	#5	38	CONTINUOUS	21'–0"
M2–3	#5	38	CONTINUOUS	20'–4"
		1	DISCONTINUOUS	
M2–4	#4	38	CONTINUOUS	21'–0"
		10	DISCONTINUOUS	
M2–5	#4	38	CONTINUOUS	21'–0"
		16	DISCONTINUOUS	

NORTH/SOUTH (CONTINUED)				
CALLOUT	BAR SIZE	# OF BARS	CONTINUOUS OR DISCONTINUOUS	DISTRIBUTED WIDTH*
C1–1	#6	28	CONTINUOUS	13'–4"
		6	DISCONTINUOUS	
C1–2	#7	28	CONTINUOUS	13'–4"
C1–3	#7	28	CONTINUOUS	14'–0"
		4	DISCONTINUOUS **	
C1–4	#6	28	CONTINUOUS	13'–4"
		4	DISCONTINUOUS	
C1–5	#9	28	CONTINUOUS	13'–4"
		8	DISCONTINUOUS	

*CHANGES IN DISTRIBUTION WIDTH SHOULD BE ON SIDE(S) ADJACENT TO INTERIOR COLUMN(S).

**ONE OF THESE DISCONTINUOUS BARS SHALL BE PLACED AT EACH BOTTOM EDGE OF THE DROP PANEL. SEE NOTE ON S–103 FOR CLARIFICATION OF LOCATION OF BOTTOM EDGE.

SHEET NOTES:

1. SEE SHEET S–001, S–002, S–003, AND S–004S FOR GENERAL NOTES.
2. ALL REINFORCING STEEL MUST BE CONTINUOUSLY BONDED AND GROUNDED PER S–002 AND ELECTRICAL DRAWINGS.
3. THE ORDER OF BAR PLACEMENT IS AS FOLLOWS:
   1. BOTTOM – PLAN EAST/WEST BARS
   2. BOTTOM – PLAN NORTH/SOUTH BARS
   3. TOP – PLAN NORTH/SOUTH BARS
   4. TOP – PLAN EAST/WEST BARS
4. SPLICES TO OCCUR AT 1/3 SPAN AND 2/3 SPAN LOCATIONS. SPAN IS DEFINED AS THE DISTANCE BETWEEN GRIDS. AN EXCEPTION TO THIS DIRECTIVE, SPLICES OCCURING WITHIN A DROP PANEL SHALL BE SHIFTED SO THAT THE ENTIRE SPLICE OCCURS OUTSIDE THE DROP PANEL.
5. WHEN PLACING EACH LAYER OF REINFORCING, THE CONTRACTOR SHALL PLACE ALL CONTINUOUS BARS SHOWN FOR THAT FIRST LAYER. CONTINUOUS BARS ARE DEFINED AS BARS THAT WILL CONTINUE FROM ONE WALL OF THE MAGAZINE TO THE OPPOSITE WALL, WITH CONTACT SPLICES. THE DISCONTINUOUS BARS SHALL THEN BE PLACED MIDWAY BETWEEN THE CONTINUOUS BARS, EQUALLY SPACED THROUGHOUT THE DISTRIBUTED WIDTH. FOR EXAMPLE, IF THERE ARE 28 CONTINUOUS BARS AND 7 DISCONTINUOUS BARS IN ONE LAYER, THE DISCONTINUOUS BARS WILL BE PLACED BETWEEN EVERY FOURTH CONTINUOUS BAR.
6. SCHEDULED BARS SHALL BE PROVIDED FOR BOTH A TOP LAYER AND A BOTTOM LAYER WITHIN THE SLAB. THE REINFORCING SIZE, SPACING, QUANTITIES AND SPLICES ARE IDENTICAL FOR BOTH THE TOP AND BOTTOM BARS.
7. DISCONTINUOUS BARS SHALL BE SPLICED/TERMINATED AT THE SAME LOCATIONS AS THE CONTINUOUS BARS. THEREFORE, FOR EACH SPECIFIC CALLOUT, THE DISCONTINUOUS AND CONTINUOUS BARS SHALL BE THE SAME LENGTH AND SPLICED/TERMINATED AT THE SAME LOCATIONS.
8. CALLOUTS C1–3 AND C2–3 OCCUR AT THE DROP PANEL LOCATIONS. THESE LOCATIONS WILL HAVE THREE LAYERS OF REINFORCING IN EACH DIRECTION IN LIEU OF TWO LAYERS OF REINFORCING IN EACH DIRECTION. THE THIRD LAYER SHALL BE IDENTICAL TO THE OTHER TWO LAYERS. THIS CAN BE SEEN ON A3/S–303 AND A2/S–304.
9. THERE ARE TWO DISTRIBUTED WIDTHS FOR ALL COLUMN AND MIDDLE STRIPS. FOR EACH STRIP, THE CONTINUOUS BARS SHALL BE DISTRIBUTED OVER THE NARROWER DISTRIBUTED WIDTH. DISCONTINUOUS BARS SHOULD BE DISTRIBUTED OVER THE WIDER DISTRIBUTED WIDTH INCLUDING ONE BAR PLACED OUTSIDE THE NARROWER DISTRIBUTED WIDTH. STRIPS THAT ARE 8 INCHES [203] WIDER SHALL HAVE ONE DISCONTINUOUS BAR ON EACH EXTREME EDGE OF THE STRIP. STRIPS THAT ARE 4 INCHES [102] WIDER SHALL HAVE ONE DISCONTINUOUS BAR ON THE SIDE ADJACENT TO THE INTERIOR COLUMN.
10. AT LOCATIONS WITH BARS OF EQUAL SIZE AND SPACINGS, A SPLICE MAY BE ELIMINATED AT THE CONTRACTOR'S DISCRETION.

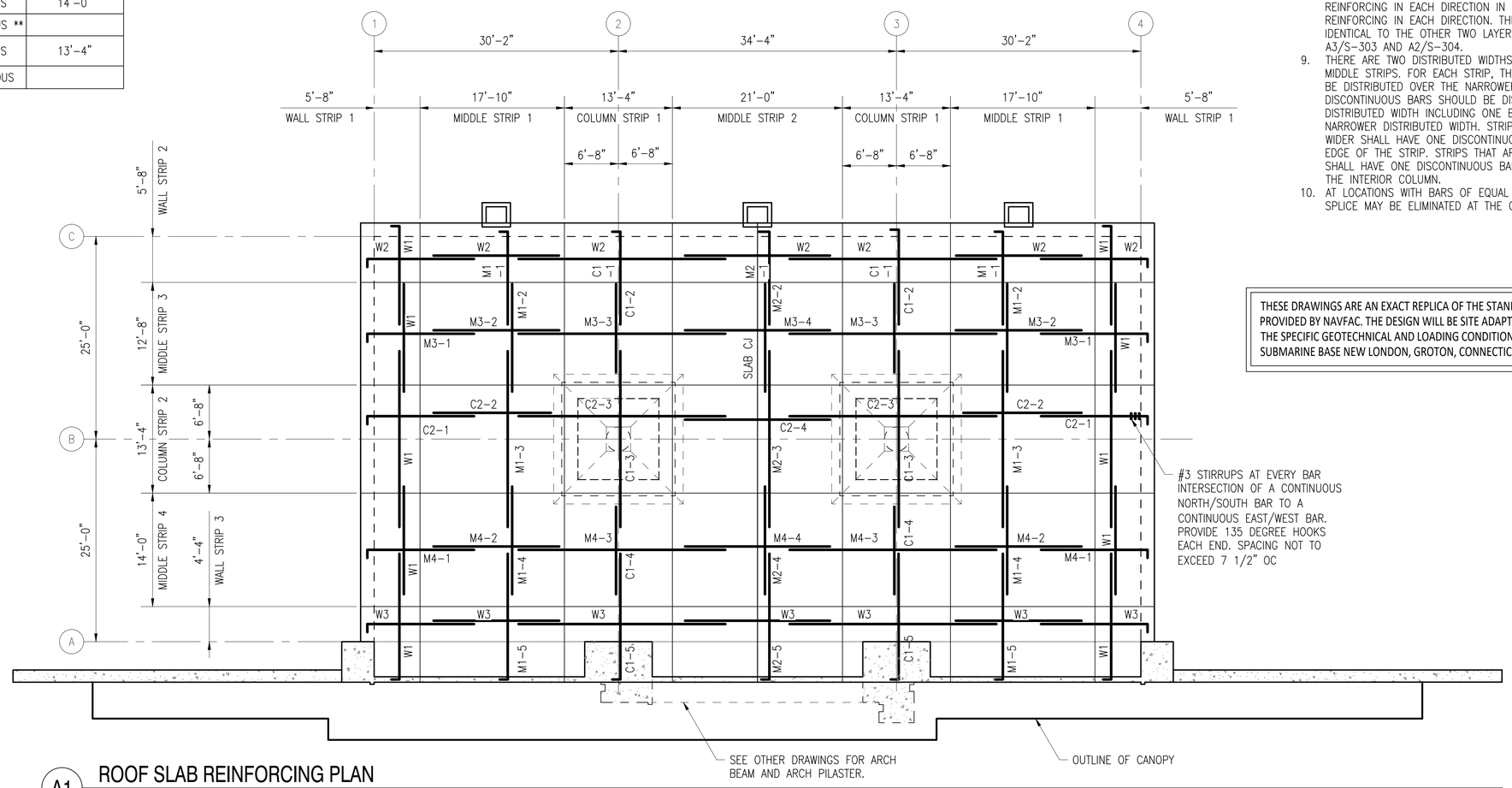

THESE DRAWINGS ARE AN EXACT REPLICA OF THE STANDARD MAGAZINE TYPE "G" PROVIDED BY NAVFAC. THE DESIGN WILL BE SITE ADAPTED AND MODIFIED TO MEET THE SPECIFIC GEOTECHNICAL AND LOADING CONDITIONS SPECIFIC TO NAVAL SUBMARINE BASE NEW LONDON, GROTON, CONNECTICUT.

A1 ROOF SLAB REINFORCING PLAN

SCALE: 1/8" = 1'–0"

SYM	DESCRIPTION	DATE	APPR

NAVFAC

SEAL

Jacobs
1100 NORTH GLEBE ROAD
SUITE 500
ARLINGTON, VIRGINIA 22201
571.218.1000
FAX: 571.218.1600

A/E INFO

APPROVED

FOR COMMANDER NAVFAC 8/14/2025

ACTIVITY
APPROVED BY LCDR ELIZABETH OLOKODE NAVFAC NLON FEAD DIRECTOR NEW LONDON, GROTON, CT

SATISFACTORY TO DATE 05/27/2025

DES FJ DRW MR CHK DW

PM/DM SMS/CWJ

BRANCH MANAGER NEK

CHIEF ENG/ARCH JWJ

FIRE PROTECTION HPN

DEPARTMENT OF THE NAVY
NAVAL FACILITIES ENGINEERING SYSTEMS COMMAND
MID-ATLANTIC

NAVAL FACILITIES ENGINEERING SYSTEMS COMMAND - MID-ATLANTIC
NAVAL STATION - NORFOLK, VA

NAVAL SUBMARINE BASE NEW LONDON

GROTON, CONNECTICUT

P-1102 WEAPONS MAGAZINE & ORDNANCE OPERATIONS FACILITY
TYPE G MAGAZINE

ROOF SLAB REINFORCING PLAN

SCALE: 1/8" = 1'–0"

EPROJECT NO.: 1667770

CONSTR. CONTR. NO.

NAVFAC DRAWING NO.
12894166

SHEET 14 OF 91

S-104

FILE NAME: C:\pw_workdir\dms003\jb2mhill_09050107\d1710459\S-104.dwg LAYOUT NAME: S-104 – ROOF SLAB REINFORCING PLAN PLOTTED: Friday, June 13, 2025 – 9:42am USER: 09050107

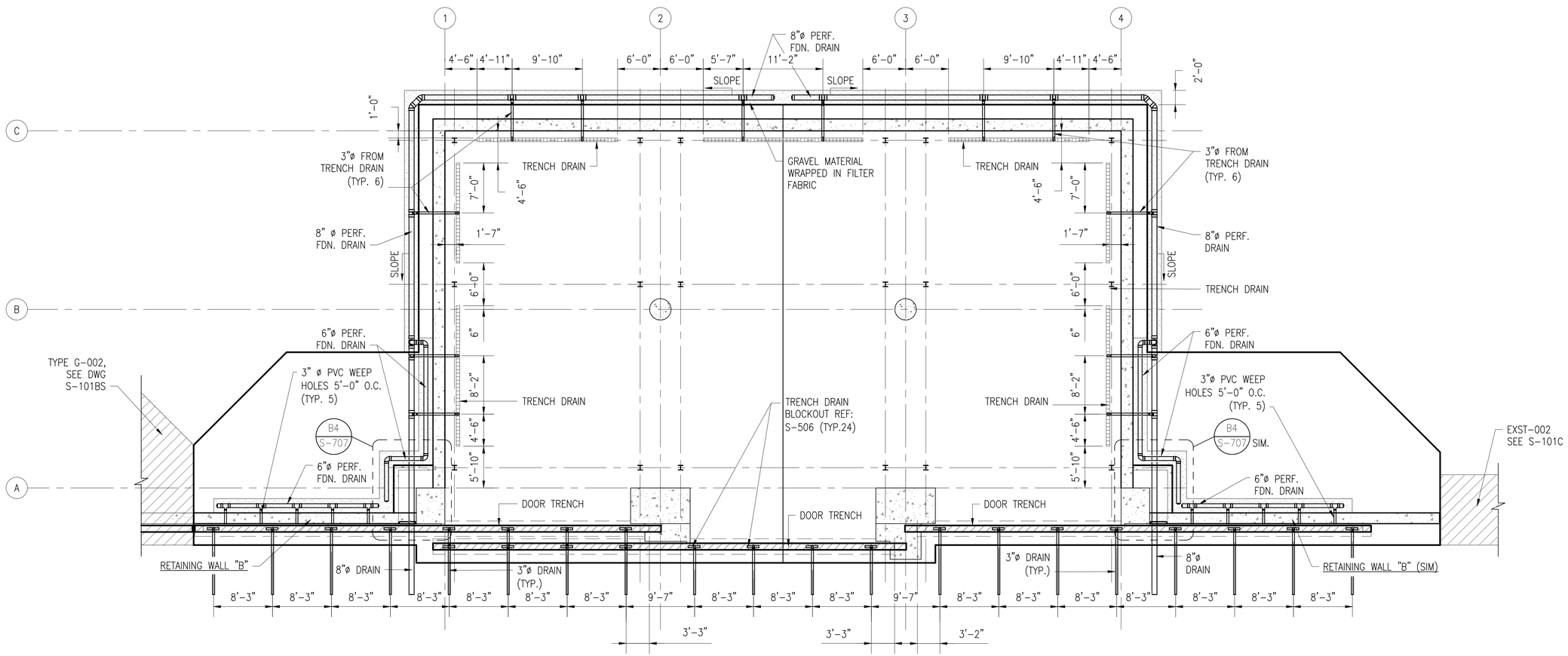

A1 TYPE G-001 DRAINAGE AND VENTILATION PLAN

SCALE: 1/8" = 1'-0"

0 4' 8' 16'

THESE DRAWINGS HAVE BEEN ADAPTED FROM APPROVED NAVFAC MUNITIONS STORAGE CONSTRUCTION DOCUMENTS, NAVFAC DRAWING NUMBERS 14145656 TO 14145704, DATED 24 SEPT 2024. JACOBS DOR RESPONSIBILITY AND SEAL APPLICABILITY IS LIMITED TO THE SITE ADAPTATIONS AND MODIFICATIONS MADE TO THIS DRAWING.

SYM	DESCRIPTION	DATE	APPR.

NAVFAC

LAURA ARICO PRESLEY REGISTERED ENGINEER AGRICULTURE COMMERCE No. 106304 STATE OF TENNESSEE 06/27/2025

SEAL

Jacobs
1100 NORTH GLEBE ROAD
SUITE 500
ARLINGTON, VIRGINIA 22201
571.218.1000
FAX: 571.218.1600

A/E INFO

APPROVED

FOR COMMANDER NAVFAC 8/14/2025

ACTIVITY
APPROVED BY LCDR ELIZABETH OLOKODE NAVFAC NLON FEAD DIRECTOR NEW LONDON, GROTON, CT

SATISFACTORY TO DATE 05/27/2025

DES	FJ	DRW	MR	CHK	DW
PM/DM	SMS/CWJ				
BRANCH MANAGER	NEK				
CHIEF ENG/ARCH	JWJ				
FIRE PROTECTION	HPN				

DEPARTMENT OF THE NAVY
NAVAL FACILITIES ENGINEERING SYSTEMS COMMAND
MIDATLANTIC

NAVAL FACILITIES ENGINEERING SYSTEMS COMMAND
NAVAL STATION - NORFOLK, VA
NAVAL FACILITIES ENGINEERING SYSTEMS COMMAND - MID-ATLANTIC

NAVAL SUBMARINE BASE NEW LONDON
GROTON, CONNECTICUT

P-1102 WEAPONS MAGAZINE & ORDNANCE OPERATIONS FACILITY
TYPE G MAGAZINE

DRAINAGE AND VENTILATION PLAN

SCALE: 1/8" = 1'-0"

EPROJECT NO.: 1667770

CONSTR. CONTR. NO.

NAVFAC DRAWING NO.
12894167

SHEET 15 OF 91

S-105AS

FILE NAME: C:\pw_workdir\dms0031\ch2mhill_09050107\d1710459\S-105AS - DRAINAGE AND VENTILATION PLAN LAYOUT NAME: S-105AS.dwg PLOTTED: Friday, June 13, 2025 - 9:42pm USER: 09050107

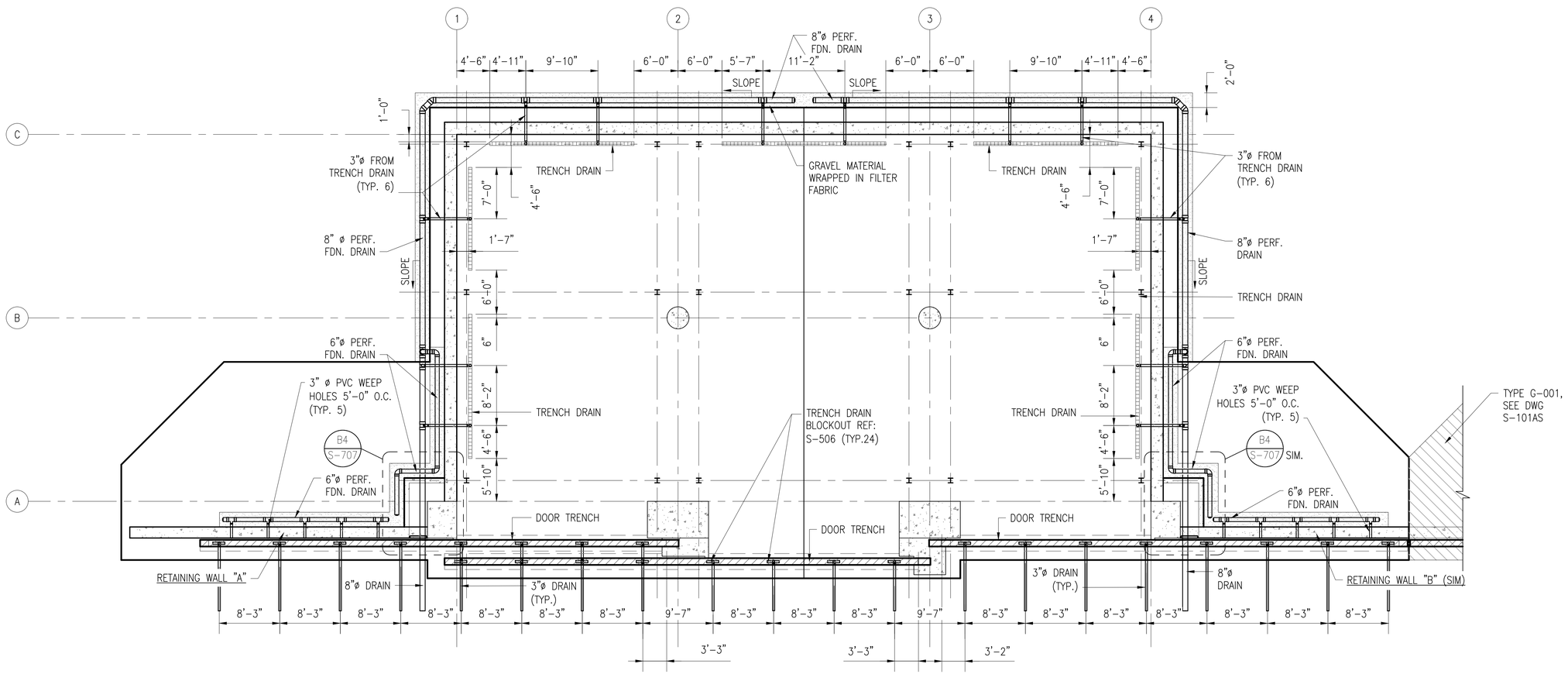

A1 TYPE G-002 DRAINAGE AND VENTILATION PLAN

SCALE: 1/8" = 1'-0"

0 4' 8' 16'

THESE DRAWINGS HAVE BEEN ADAPTED FROM APPROVED NAVFAC MUNITIONS STORAGE CONSTRUCTION DOCUMENTS, NAVFAC DRAWING NUMBERS 14145656 TO 14145704, DATED 24 SEPT 2024. JACOBS DOR RESPONSIBILITY AND SEAL APPLICABILITY IS LIMITED TO THE SITE ADAPTATIONS AND MODIFICATIONS MADE TO THIS DRAWING.

SYM	DESCRIPTION	DATE	APPR.

NAVFAC

LAURA ARICO PRESLEY REGISTERED ENGINEER AGRICULTURE COMMERCE No. 106304 STATE OF TENNESSEE 06/27/2025

SEAL

Jacobs
1100 NORTH GLEBE ROAD
SUITE 500
ARLINGTON, VIRGINIA 22201
571.218.1000
FAX: 571.218.1600

A/E INFO

APPROVED

FOR COMMANDER NAVFAC 8/14/2025

ACTIVITY
APPROVED BY LCDR ELIZABETH OLOKODE NAVFAC NLON FEAD DIRECTOR NEW LONDON, GROTON, CT

SATISFACTORY TO DATE 05/27/2025

DES	FJ	DRW	MR	CHK	DW
PM/DM	SMS/CWJ				
BRANCH MANAGER	NEK				
CHIEF ENG/ARCH	JWJ				
FIRE PROTECTION	HPN				

DEPARTMENT OF THE NAVY
NAVAL FACILITIES ENGINEERING SYSTEMS COMMAND
MIDATLANTIC
NAVAL FACILITIES ENGINEERING SYSTEMS COMMAND - MID-ATLANTIC
NAVAL STATION - NORFOLK, VA
NAVAL SUBMARINE BASE NEW LONDON
GROTON, CONNECTICUT
P-1102 WEAPONS MAGAZINE & ORDNANCE OPERATIONS FACILITY
TYPE G MAGAZINE
DRAINAGE AND VENTILATION PLAN

SCALE: 1/8" = 1'-0"
EPROJECT NO.: 1667770
CONSTR. CONTR. NO.
NAVFAC DRAWING NO. 12894168
SHEET 16 OF 91

S-105BS

FILE NAME: C:\pw_workdir\dms0031\ch2mhill_09050107\d1710459\S-105BS - DRAINAGE AND VENTILATION PLAN PLOTTED: Friday, June 13, 2025 - 9:43am USER: 09050107 LAYOUT NAME: S-105BS.dwg

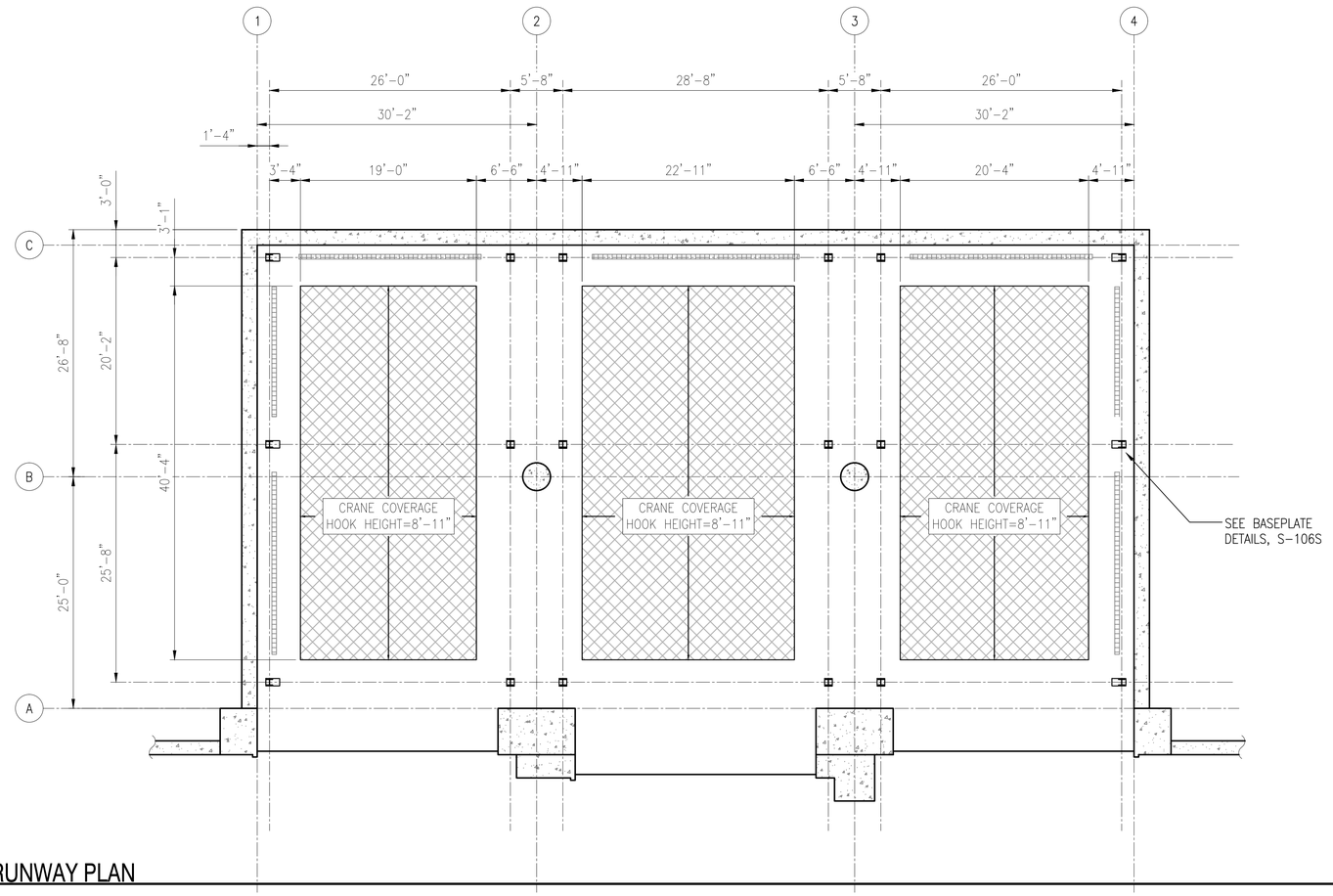

TYPE G-001 & G-002 CRANE RUNWAY PLAN

SCALE: 1/8" = 1'-0"

NOTES:

1. CRANE SPANS ARE ESTIMATES. DESIGN BY CRANE SUPPLIER TO CONSIDER CLEARANCES, HOOK HEIGHT, AND COVERAGE AREAS. TOP OF CRANE ELEVATION 12'-11" MAXIMUM TO PROVIDE OPERATIONAL CLEARANCE AFTER CEILING DEFORMATION, HOOK HEIGHT 8'-11" MINIMUM.
2. CRANE RAIL AND CRANE RAIL SUPPORT BEAM MUST COMPLY WITH CMAA 74 ALIGNMENT REQUIREMENTS.
3. BRIDGE CRANE MUST COMPLY WITH UFGS 41 22 13.15 AND MEET THE FOLLOWING REQUIREMENTS:

   A. 5 TON CAPACITY
   B. SINGLE GIRDER SYSTEM
   C. MAXIMUM WHEEL LOAD 5.3K
   D. MAXIMUM TOTAL WEIGHT 6.8K
   E. MAXIMUM HOIST AND TROLLEY WEIGHT 1.8K
   F. CMAA 74 CLASS D SERVICE
   G. HOOK AND CRANE CLEARNACE REQUIREMENTS ON THIS SHEET.
4. BRIDGE CRANE RAIL MUST BE CONSTRUCTED TO RUNWAY TOLERANCES IN ACCORDANCE WITH CMAA SPECIFICATION #74. RAIL SPLICES AND SPLICE CONNECTIONS TO BE SELECTED BY BRIDGE CRANE RAIL MANUFACTURER.
5. BRIDGE CRANE HOOK MUST BE SIZED TO APPROPRIATELY INTERFACE WITH CROSBY SHACKLE G123, NOMINAL SIZE
6. 3/4", WORKING LOAD LIMIT 5 TON.

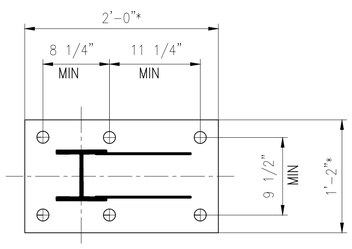

TYPE 1-EXTERIOR CRANE COLUMN

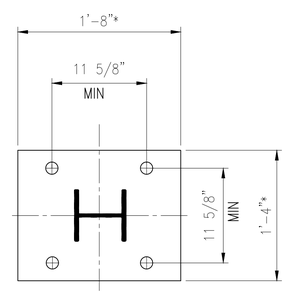

TYPE 2-INTERIOR CRANE COLUMN

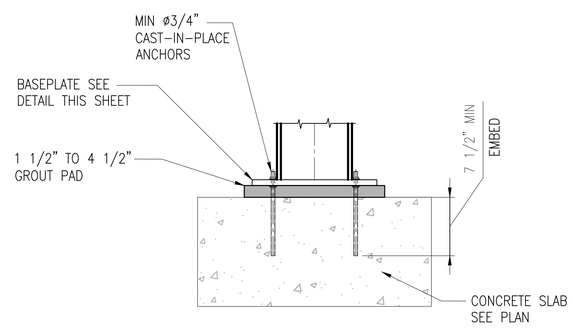

CRANE COLUMN ELEVATION VIEW

NOTE:

1. BASEPLATE, GROUT, AND ANCHOR ROD SIZE REQ DETERMINED BY CRANE MFR.
2. ASTERISK (*) DENOTES BASEPLATE DIM TO BE DETERMINED BY CRANE MFR.

CRANE COLUMN BASE PLATE DETAILS

NTS

GRAPHIC SCALE:

1/8"=1'-0" 0' 5' 10' 20' 30'

SYM	DESCRIPTION	DATE	APPR.

NAVFAC

SEAL

Jacobs
1100 NORTH GLEBE ROAD
SUITE 500
ARLINGTON, VIRGINIA 22201
571.218.1000
FAX: 571.218.1600

A/E INFO

APPROVED

FOR COMMANDER NAVFAC 8/14/2025

ACTIVITY
APPROVED BY LCDR ELIZABETH OLOKODE NAVFAC NLON FEAD DIRECTOR NEW LONDON, GROTON, CT

SATISFACTORY TO DATE 05/27/2025

DES SB DRW JC CHK LAP

PM/DM SMS/CWJ

BRANCH MANAGER NEK

CHIEF ENG/ARCH JWJ

FIRE PROTECTION HPN

DEPARTMENT OF THE NAVY
NAVAL FACILITIES ENGINEERING SYSTEMS COMMAND
MID-ATLANTIC

NAVAL FACILITIES ENGINEERING SYSTEMS COMMAND - MID-ATLANTIC
NAVAL STATION - NORFOLK, VA

NAVAL SUBMARINE BASE NEW LONDON
GROTON, CONNECTICUT

P-1102 WEAPONS MAGAZINE & ORDNANCE OPERATIONS FACILITY
TYPE G MAGAZINE

CRANE RUNWAY PLAN - SITE ADAPTED

SCALE: AS SHOWN

EPROJECT NO.: 1667770

CONSTR. CONTR. NO.

NAVFAC DRAWING NO.
12894169

SHEET 17 OF 91

S-106S

FILE NAME: C:\pw_workdir\dms003\jcb2mhll_09050107\d1710459\S-106S.dwg LAYOUT NAME: S-106S PLOTTED: Friday, June 13, 2025 - 9:43am USER: 09050107

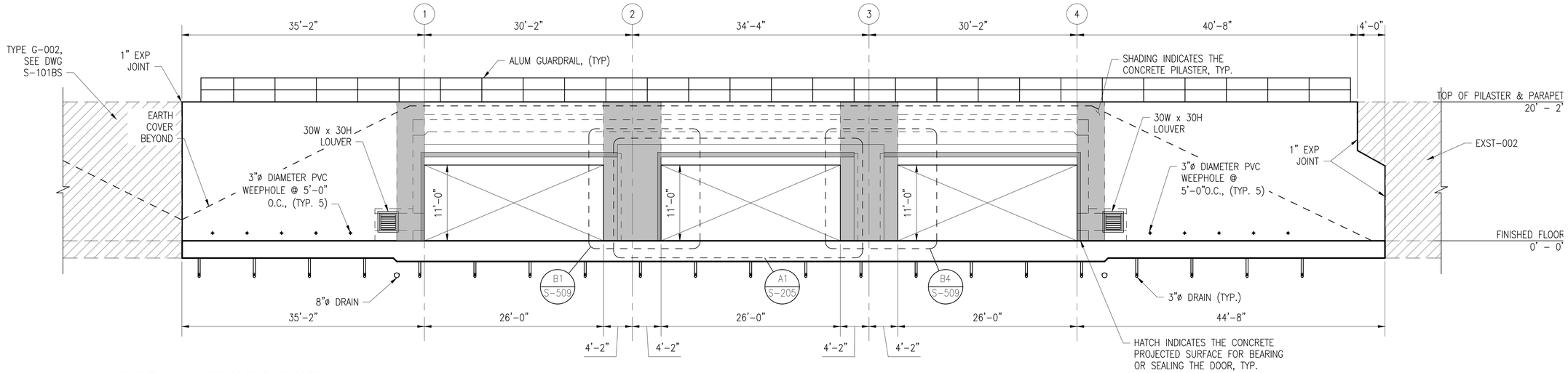

C1 TYPE G-001 FRONT ELEVATION

SCALE: 1/8" = 1'-0"

0 4' 8' 16'

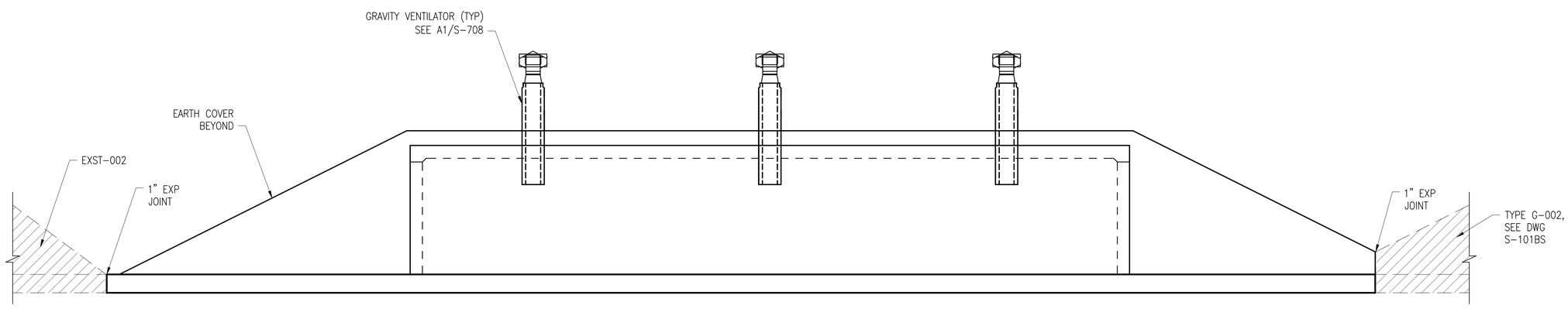

A1 TYPE G-001 REAR ELEVATION

SCALE: 1/8" = 1'-0"

0 4' 8' 16'

THESE DRAWINGS HAVE BEEN ADAPTED FROM APPROVED NAVFAC MUNITIONS STORAGE CONSTRUCTION DOCUMENTS, NAVFAC DRAWING NUMBERS 14145656 TO 14145704, DATED 24 SEPT 2024. JACOBS DOR RESPONSIBILITY AND SEAL APPLICABILITY IS LIMITED TO the SITE ADAPTATIONS AND MODIFICATIONS MADE TO THIS DRAWING.

SYM	DESCRIPTION	DATE	APPR.

NAVFAC

SEAL

Jacobs
1100 NORTH GLEBE ROAD
SUITE 500
ARLINGTON, VIRGINIA 22201
571.218.1000
FAX: 571.218.1600

A/E INFO

APPROVED

FOR COMMANDER NAVFAC 8/14/2025

ACTIVITY
APPROVED BY LCDR ELIZABETH OLOKODE NAVFAC NLON FEAD DIRECTOR NEW LONDON, GROTON, CT

SATISFACTORY TO DATE 05/27/2025

DES	FJ	DRW	MR	CHK	DW
PM/DM	SMS/CWJ				
BRANCH MANAGER	NEK				
CHIEF ENG/ARCH	JWJ				
FIRE PROTECTION	HPN				

DEPARTMENT OF THE NAVY
NAVAL FACILITIES ENGINEERING SYSTEMS COMMAND
MID-ATLANTIC

NAVAL FACILITIES ENGINEERING SYSTEMS COMMAND
NAVAL FACILITIES ENGINEERING SYSTEMS COMMAND - MID-ATLANTIC
NAVAL STATION - NORFOLK, VA

NAVAL SUBMARINE BASE NEW LONDON
GROTON, CONNECTICUT
P-1102 WEAPONS MAGAZINE & ORDNANCE OPERATIONS FACILITY
TYPE G MAGAZINE

FRAMING ELEVATIONS

SCALE: 1/8" = 1'-0"
EPROJECT NO.: 1667770
CONSTR. CONTR. NO.
NAVFAC DRAWING NO. 12894170
SHEET 18 OF 91

S-201AS

FILE NAME: C:\pw_workdir\dms003\jb2mhill_09050107\d1710459\S-201AS.dwg LAYOUT NAME: S-201AS - FRAMING ELEVATIONS PLOTTED: Friday, June 13, 2025 - 9:43am USER: 09050107

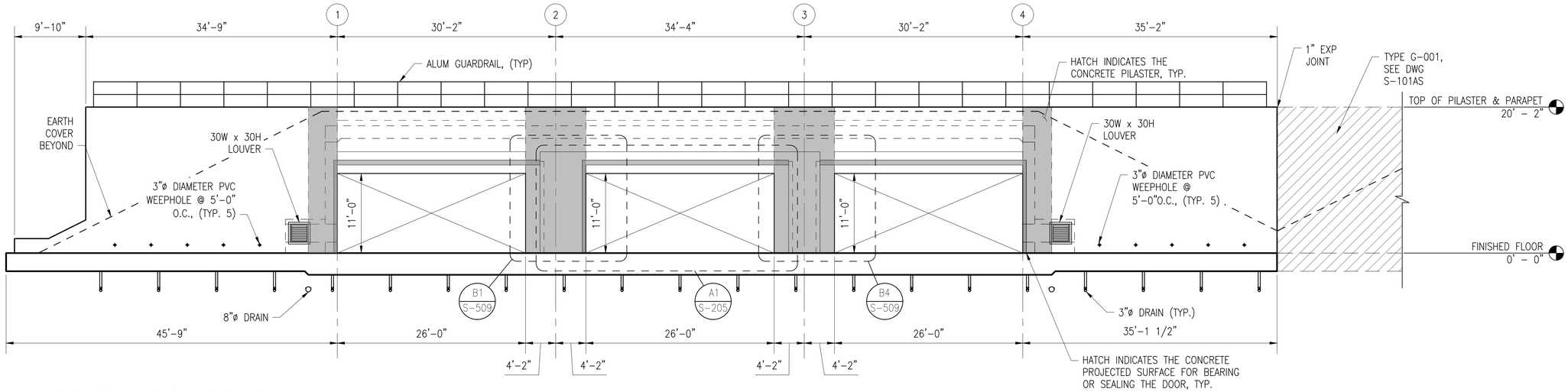

C1 TYPE G-002 FRONT ELEVATION

SCALE: 1/8" = 1'-0"

0 4' 8' 16'

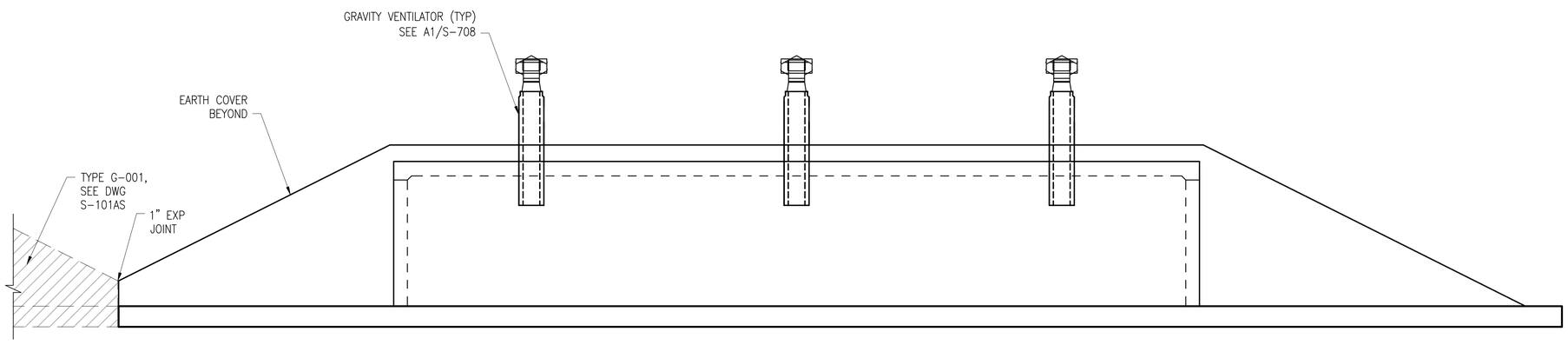

A1 TYPE G-002 REAR ELEVATION

SCALE: 1/8" = 1'-0"

0 4' 8' 16'

THESE DRAWINGS HAVE BEEN ADAPTED FROM APPROVED NAVFAC MUNITIONS STORAGE CONSTRUCTION DOCUMENTS, NAVFAC DRAWING NUMBERS 14145656 TO 14145704, DATED 24 SEPT 2024. JACOBS DOR RESPONSIBILITY AND SEAL APPLICABILITY IS LIMITED TO THE SITE ADAPTATIONS AND MODIFICATIONS MADE TO THIS DRAWING.

SYM	DESCRIPTION	DATE	APPR.

NAVFAC

SEAL: LAURA ARICO PRESLEY, REGISTERED ENGINEER, AGRICULTURE, COMMERCE, No. 106363, STATE OF TENNESSEE, 06/23/2025

Jacobs
1100 NORTH GLEBE ROAD
SUITE 500
ARLINGTON, VIRGINIA 22201
571.218.1000
FAX: 571.218.1600

A/E INFO

APPROVED FOR COMMANDER NAVFAC 8/14/2025

ACTIVITY: APPROVED BY LCDR ELIZABETH OLOKODE NAVFAC NLON FEAD DIRECTOR NEW LONDON, GROTON, CT

SATISFACTORY TO DATE 05/27/2025

DES	FJ	DRW	MR	CHK	DW
PM/DM	SMS/CWJ				
BRANCH MANAGER	NEK				
CHIEF ENG/ARCH	JWJ				
FIRE PROTECTION	HPN				

DEPARTMENT OF THE NAVY
NAVAL FACILITIES ENGINEERING SYSTEMS COMMAND
MID-ATLANTIC

NAVAL FACILITIES ENGINEERING SYSTEMS COMMAND - MID-ATLANTIC
NAVAL STATION - NORFOLK, VA

NAVAL SUBMARINE BASE NEW LONDON
GROTON, CONNECTICUT
P-1102 WEAPONS MAGAZINE & ORDNANCE OPERATIONS FACILITY
TYPE G MAGAZINE

FRAMING ELEVATIONS

SCALE: 1/8" = 1'-0"
EPROJECT NO.: 1667770
CONSTR. CONTR. NO.
NAVFAC DRAWING NO. 12894171
SHEET 19 OF 91

S-201BS

FILE NAME: C:\pw_workdir\dms003\jacobs\1710459\S-201BS.dwg LAYOUT NAME: S-201BS – FRAMING ELEVATIONS PLOTTED: Friday, June 13, 2025 – 9:44am USER: 09050107

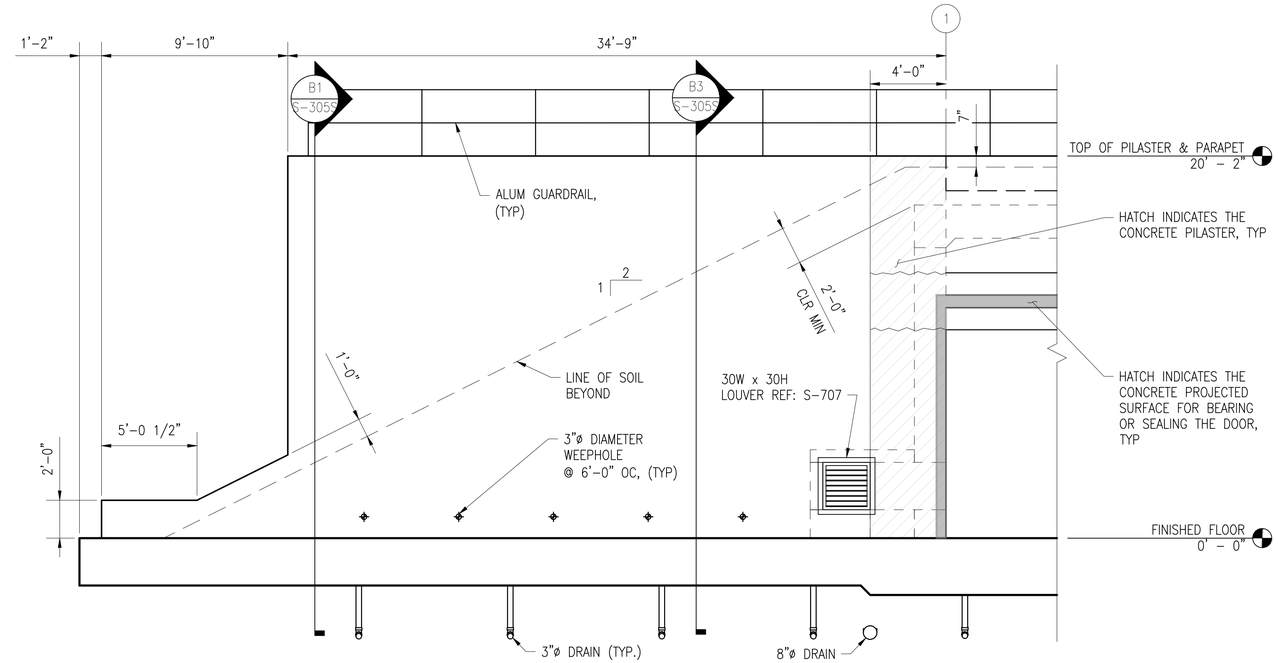

C3 RETAINING WALL ELEVATION

RETAINING WALL "A" AS SHOWN
SCALE: 1/4" = 1'-0"

0 2' 4' 8'

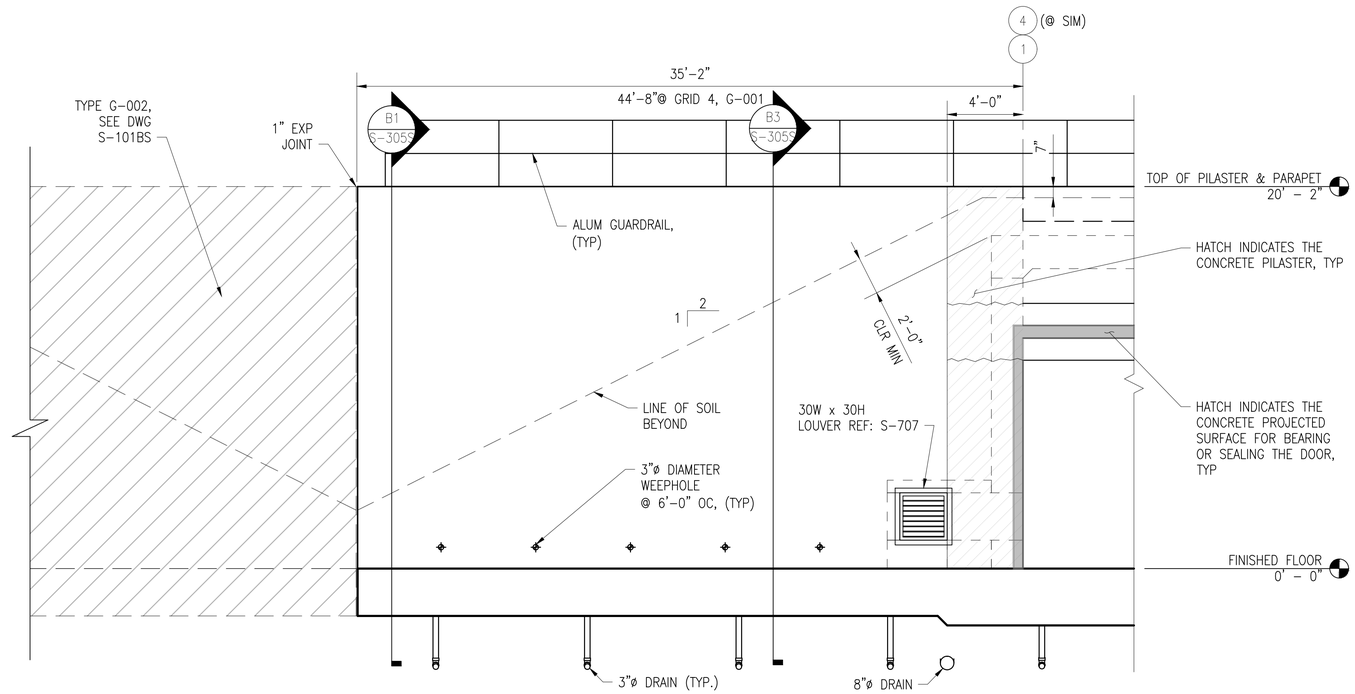

A3 RETAINING WALL ELEVATION

RETAINING WALL "B" (OPP HAND AT SIM)
SCALE: 1/4" = 1'-0"

0 2' 4' 8'

THESE DRAWINGS HAVE BEEN ADAPTED FROM APPROVED NAVFAC MUNITIONS STORAGE CONSTRUCTION DOCUMENTS, NAVFAC DRAWING NUMBERS 14145656 TO 14145704, DATED 24 SEPT 2024. JACOBS DOR RESPONSIBILITY AND SEAL APPLICABILITY IS LIMITED TO THE SITE ADAPTATIONS AND MODIFICATIONS MADE TO THIS DRAWING.

STM	DESCRIPTION	DATE	APPR.

NAVFAC

LAURA ARICO PRESLEY
REGISTERED ENGINEER
AGRICULTURE
COMMERCE
No. 106362
STATE OF TENNESSEE
06/27/2025
SEAL

Jacobs
1100 NORTH GLEBE ROAD
SUITE 500
ARLINGTON, VIRGINIA 22201
571.218.1000
FAX: 571.218.1600

A/E INFO

APPROVED
FOR COMMANDER NAVFAC 8/14/2025

ACTIVITY
APPROVED BY LCDR ELIZABETH OLOKODE NAVFAC NLON FEAD DIRECTOR NEW LONDON, GROTON, CT

SATISFACTORY TO DATE 05/27/2025

DES	FJ	DRW	MR	CHK	DW
PM/DM	SMS/CWJ				
BRANCH MANAGER	NEK				
CHIEF ENG/ARCH	JWJ				
FIRE PROTECTION	HPN				

DEPARTMENT OF THE NAVY
NAVAL FACILITIES ENGINEERING SYSTEMS COMMAND - MID-ATLANTIC
MID-ATLANTIC
NAVAL FACILITIES ENGINEERING SYSTEMS COMMAND
NAVAL STATION - NORFOLK, VA
NAVAL SUBMARINE BASE NEW LONDON
GROTON, CONNECTICUT
P-1102 WEAPONS MAGAZINE & ORDNANCE OPERATIONS FACILITY
TYPE G MAGAZINE
FRAMING ELEVATIONS

SCALE: 1/4" = 1'-0"
EPROJECT NO.: 1667770
CONSTR. CONTR. NO.
NAVFAC DRAWING NO. 12894172
SHEET 20 OF 91

S-202S

FILE NAME: C:\pw_work\dms\jdm0033\ch2mhill_09050107\d1710459\S-202S.dwg LAYOUT NAME: S-202 - FRAMING ELEVATIONS PLOTTED: Friday, June 13, 2025 - 9:44am USER: 09050107

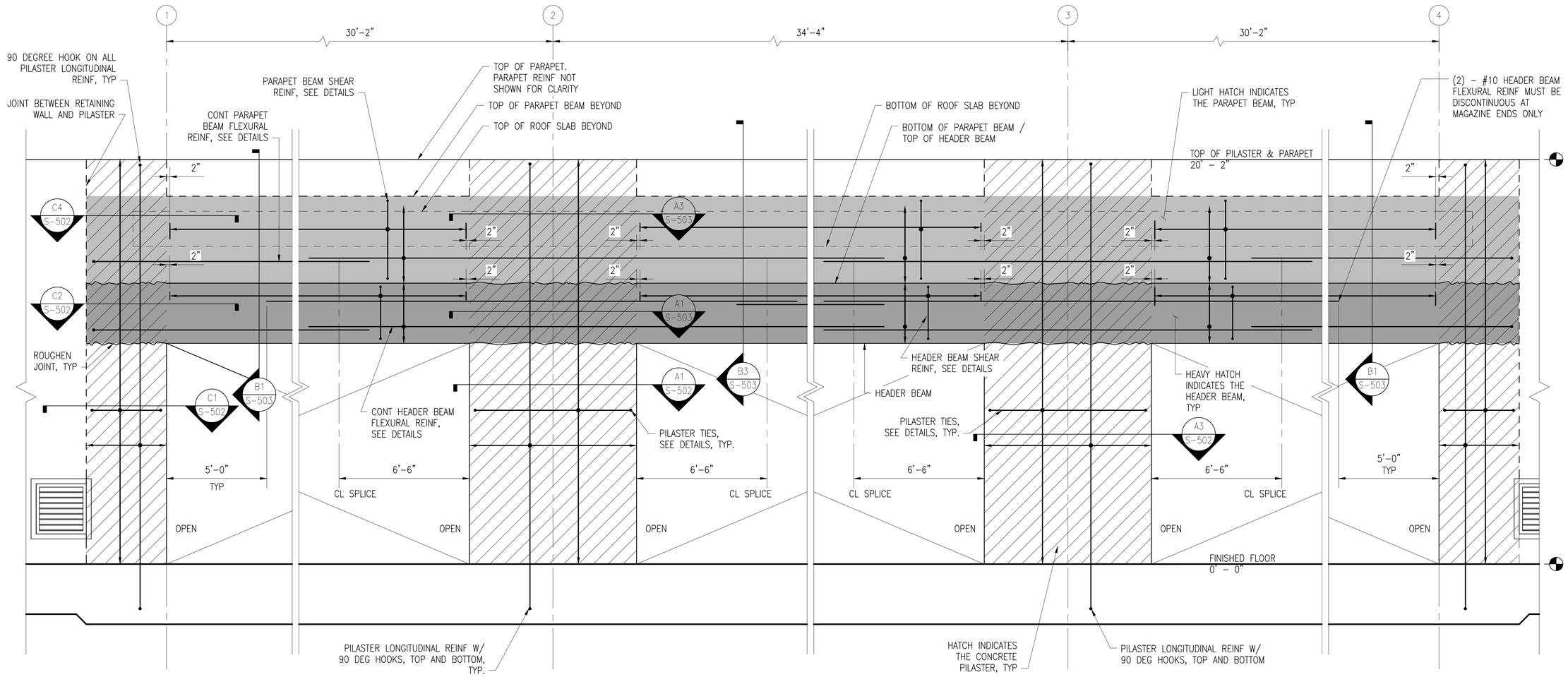

A1 HEADWALL REINFORCEMENT TO BLAST PILASTER ELEVATION/SECTION

SCALE: 3/8" = 1'-0"

0 2' 4' 8'

NOTE: ARCH BEAMS AND ARCH PILASTERS NOT SHOWN FOR CLARITY.

THESE DRAWINGS ARE AN EXACT REPLICA OF THE STANDARD MAGAZINE TYPE "G" PROVIDED BY NAVFAC. THE DESIGN WILL BE SITE ADAPTED AND MODIFIED TO MEET THE SPECIFIC GEOTECHNICAL AND LOADING CONDITIONS SPECIFIC TO NAVAL SUBMARINE BASE NEW LONDON, GROTON, CONNECTICUT.

SYM	DESCRIPTION	DATE	APPR.

NAVFAC

SEAL

Jacobs
1100 NORTH GLEBE ROAD
SUITE 500
ARLINGTON, VIRGINIA 22201
571.218.1000
FAX: 571.218.1600

A/E INFO

APPROVED
FOR COMMANDER NAVFAC 8/14/2025

ACTIVITY
APPROVED BY LCDR ELIZABETH OLOKODE NAVFAC NLON FEAD DIRECTOR NEW LONDON, GROTON, CT

SATISFACTORY TO DATE 05/27/2025

DES	FJ	DRW	MR	CHK	DW
PM/DM	SMS/CWJ				
BRANCH MANAGER	NEK				
CHIEF ENG/ARCH	JWJ				
FIRE PROTECTION	HPN				

DEPARTMENT OF THE NAVY
NAVAL FACILITIES ENGINEERING SYSTEMS COMMAND
MID-ATLANTIC

NAVAL FACILITIES ENGINEERING SYSTEMS COMMAND
NAVAL STATION - NORFOLK, VA
MID-ATLANTIC

NAVAL SUBMARINE BASE NEW LONDON
GROTON, CONNECTICUT
P-1102 WEAPONS MAGAZINE & ORDNANCE OPERATIONS FACILITY
TYPE G MAGAZINE

FRAMING ELEVATIONS

SCALE: 3/8" = 1'-0"
EPROJECT NO.: 1667770
CONSTR. CONTR. NO.
NAVFAC DRAWING NO. 12894173
SHEET 21 OF 91

S-203

FILE NAME: C:\pw_work\dir\den003\js2mhill_09050107\d1710459\S-203.dwg LAYOUT NAME: S-203 – FRAMING ELEVATIONS PLOTTED: Friday, June 13, 2025 – 9:44am USER: 09050107

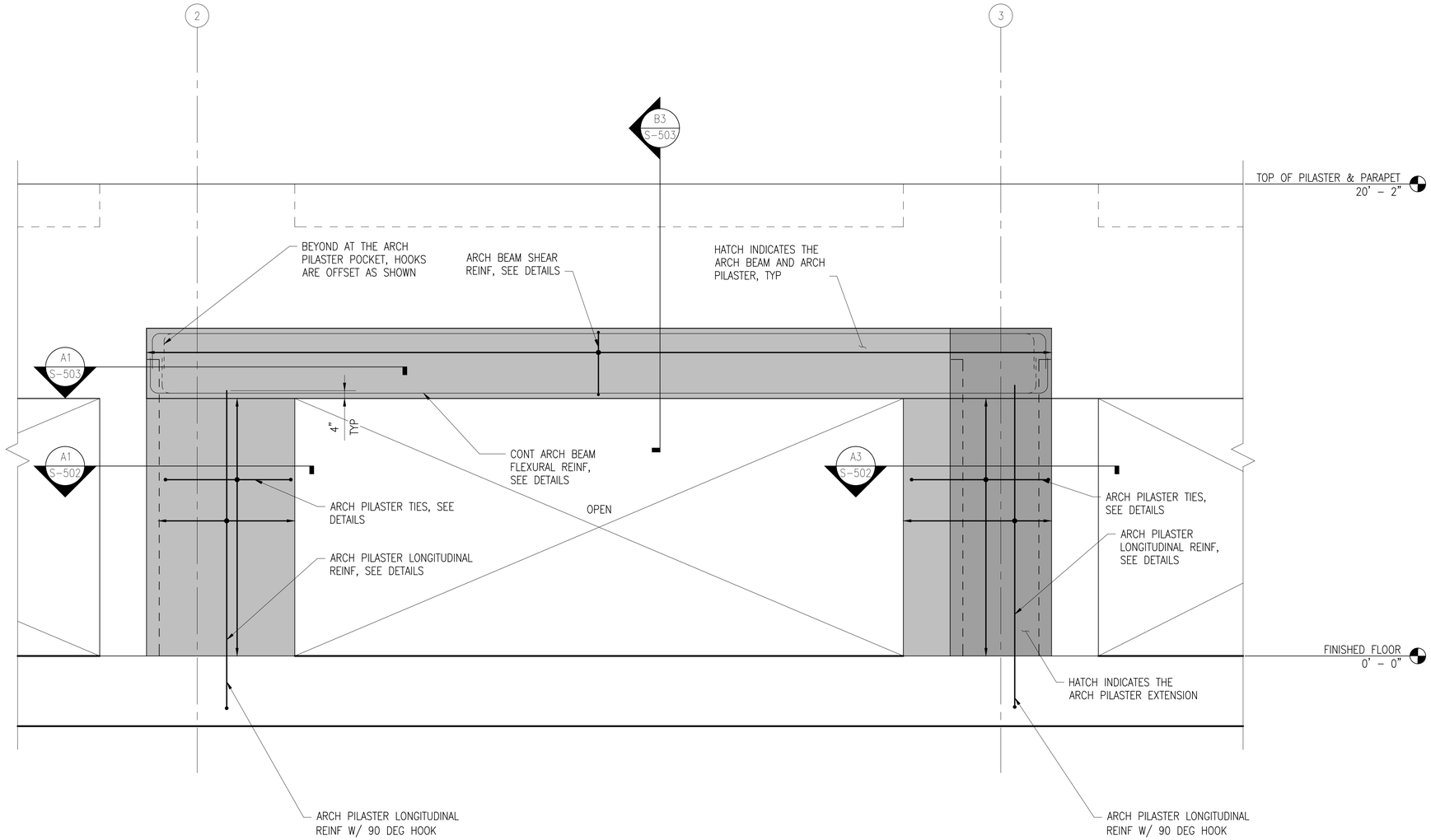

A1 ARCH BEAM TO ARCH PILASTER REINFORCEMENT ELEVATION / SECTION

SCALE: 3/8" = 1'-0"

0 2' 4' 8'

THESE DRAWINGS ARE AN EXACT REPLICA OF THE STANDARD MAGAZINE TYPE "G" PROVIDED BY NAVFAC. THE DESIGN WILL BE SITE ADAPTED AND MODIFIED TO MEET THE SPECIFIC GEOTECHNICAL AND LOADING CONDITIONS SPECIFIC TO NAVAL SUBMARINE BASE NEW LONDON, GROTON, CONNECTICUT.

SYM	DESCRIPTION	DATE	APPR.

NAVFAC

SEAL

Jacobs
1100 NORTH GLEBE ROAD
SUITE 500
ARLINGTON, VIRGINIA 22201
571.218.1000
FAX: 571.218.1600

A/E INFO

APPROVED
FOR COMMANDER NAVFAC 8/14/2025

ACTIVITY
APPROVED BY LCDR ELIZABETH OLOKODE NAVFAC NLON FEAD DIRECTOR NEW LONDON, GROTON, CT

SATISFACTORY TO DATE 05/27/2025

DES	FJ	DRW	MR	CHK	DW
PM/DM	SMS/CWJ				
BRANCH MANAGER	NEK				
CHIEF ENG/ARCH	JWJ				
FIRE PROTECTION	HPN				

DEPARTMENT OF THE NAVY
NAVAL FACILITIES ENGINEERING SYSTEMS COMMAND
MID-ATLANTIC
NAVAL FACILITIES ENGINEERING SYSTEMS COMMAND - MID-ATLANTIC
NAVAL STATION - NORFOLK, VA
NAVAL SUBMARINE BASE NEW LONDON
GROTON, CONNECTICUT
P-1102 WEAPONS MAGAZINE & ORDNANCE OPERATIONS FACILITY
TYPE G MAGAZINE
FRAMING ELEVATIONS

SCALE: 3/8" = 1'-0"
EPROJECT NO.: 1667770
CONSTR. CONTR. NO.
NAVFAC DRAWING NO. 12894174
SHEET 22 OF 91

S-204

FILE NAME: C:\pw_workdir\pw003\jacobs\d1719459\S-204.dwg LAYOUT NAME: S-204 – FRAMING ELEVATIONS PLOTTED: Friday, June 13, 2025 – 9:45am USER: 09050107

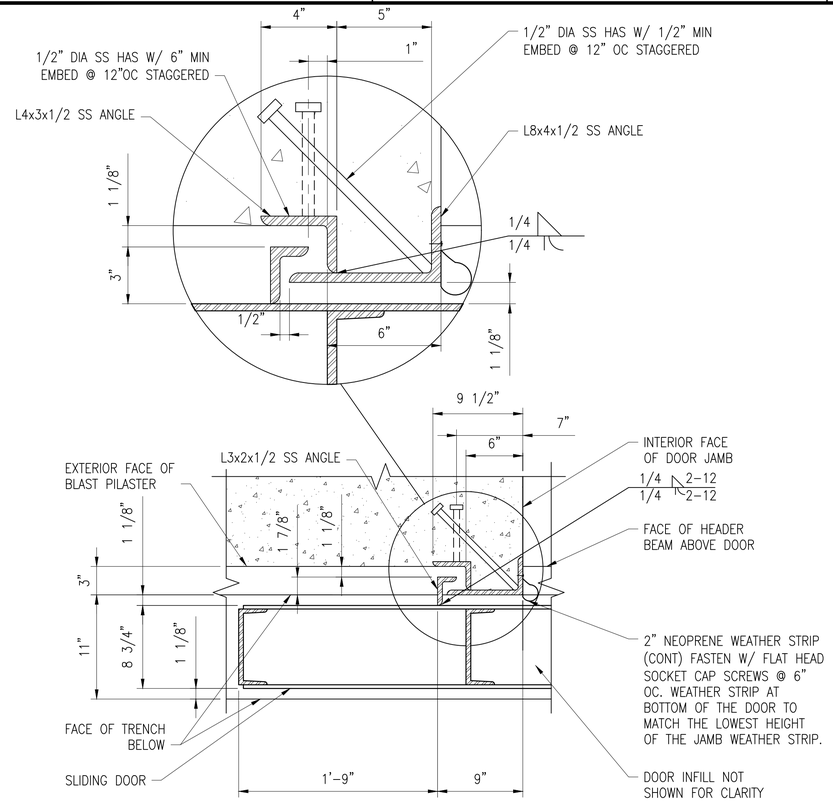

B1 LEADING DOOR EDGE JAMB DETAIL

SCALE: 1 1/2" = 1'-0"

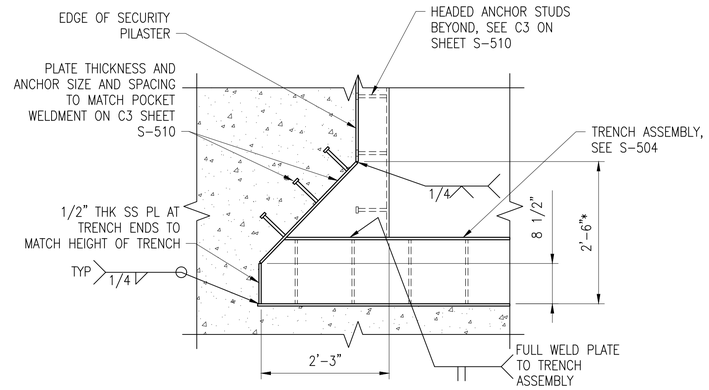

1. DIMENSIONS NOTED WITH AN (*) MUST BE COORDINATED BY THE DOOR MANUFACTURER ENSURING THE DOOR SYSTEM PERFORMS PER THE BLAST DOOR NOTES.
2. SEE SHEETS S-504, S-505 S-509 AND S-510 FOR INFORMATION NOT SHOWN.

C3 SECURITY PILASTER POCKET AT DOOR PLOW

SCALE: 3/4" = 1'-0"

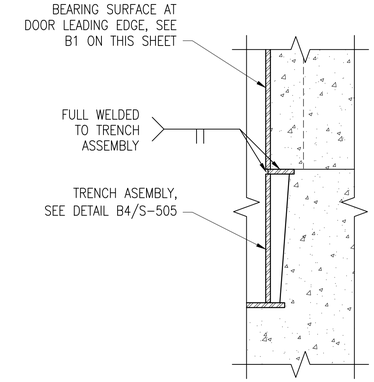

C4 LEADING DOOR JAMB AT TRENCH

SCALE: 1 1/2" = 1'-0"

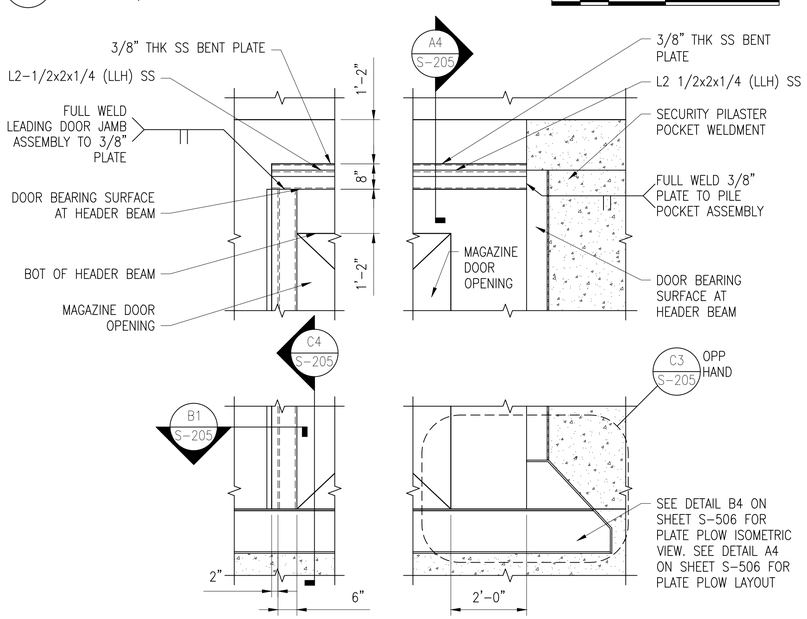

A1 ELEVATION OF DOOR BEARING SURFACES

SCALE: 1/2" = 1'-0"

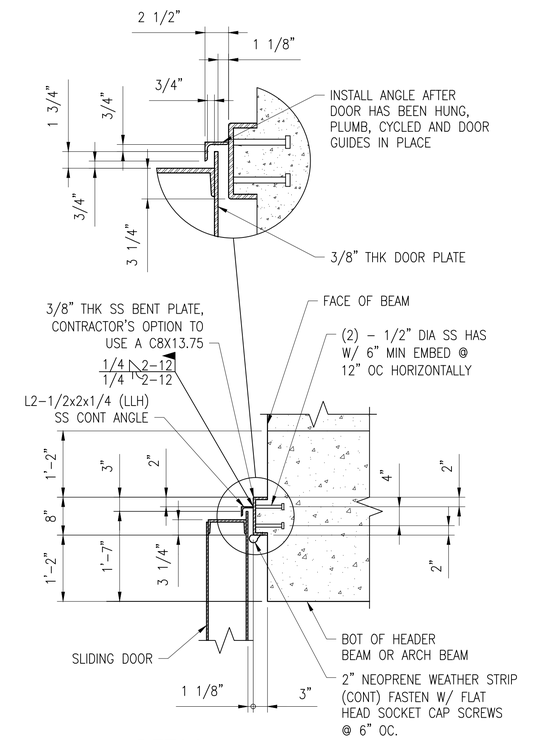

A4 DETAIL

SCALE: 3/4" = 1'-0"

THESE DRAWINGS ARE AN EXACT REPLICA OF THE STANDARD MAGAZINE TYPE "G" PROVIDED BY NAVFAC. THE DESIGN WILL BE SITE ADAPTED AND MODIFIED TO MEET THE SPECIFIC GEOTECHNICAL AND LOADING CONDITIONS SPECIFIC TO NAVAL SUBMARINE BASE NEW LONDON, GROTON, CONNECTICUT.

SYM	DESCRIPTION	DATE	APPR.

NAVFAC

Jacobs
1100 NORTH GLEBE ROAD
SUITE 500
ARLINGTON, VIRGINIA 22201
571.218.1000
FAX: 571.218.1600

A/E INFO

SEAL

APPROVED
FOR COMMANDER NAVFAC 8/14/2025

ACTIVITY
APPROVED BY LCDR ELIZABETH OLOKODE NAVFAC NLON FEAD DIRECTOR NEW LONDON, GROTON, CT

SATISFACTORY TO DATE 05/27/2025

DES	FJ	DRW	MR	CHK	DW
PM/DM	SMS/CWJ				
BRANCH MANAGER	NEK				
CHIEF ENG/ARCH	JWJ				
FIRE PROTECTION	HPN				

DEPARTMENT OF THE NAVY
NAVAL FACILITIES ENGINEERING SYSTEMS COMMAND
MID-ATLANTIC

NAVAL FACILITIES ENGINEERING SYSTEMS COMMAND - MID-ATLANTIC
NAVAL STATION - NORFOLK, VA

NAVAL SUBMARINE BASE NEW LONDON
GROTON, CONNECTICUT

P-1102 WEAPONS MAGAZINE & ORDNANCE OPERATIONS FACILITY
TYPE G MAGAZINE

FRONT WALL PARTIAL ELEVATION AND DETAILS

SCALE: AS NOTED
EPROJECT NO.: 1667770
CONSTR. CONTR. NO.
NAVFAC DRAWING NO. 12894175
SHEET 23 OF 91
S-205

FILE NAME: C:\pw_workdir\dem0033\c20mhlll_09050107\d1710459\S-205.dwg LAYOUT NAME: S-205 - FRONT WALL PARTIAL ELEVATION AND DETAILS PLOTTED: Friday, June 13, 2025 - 8:45am USER: 09050107

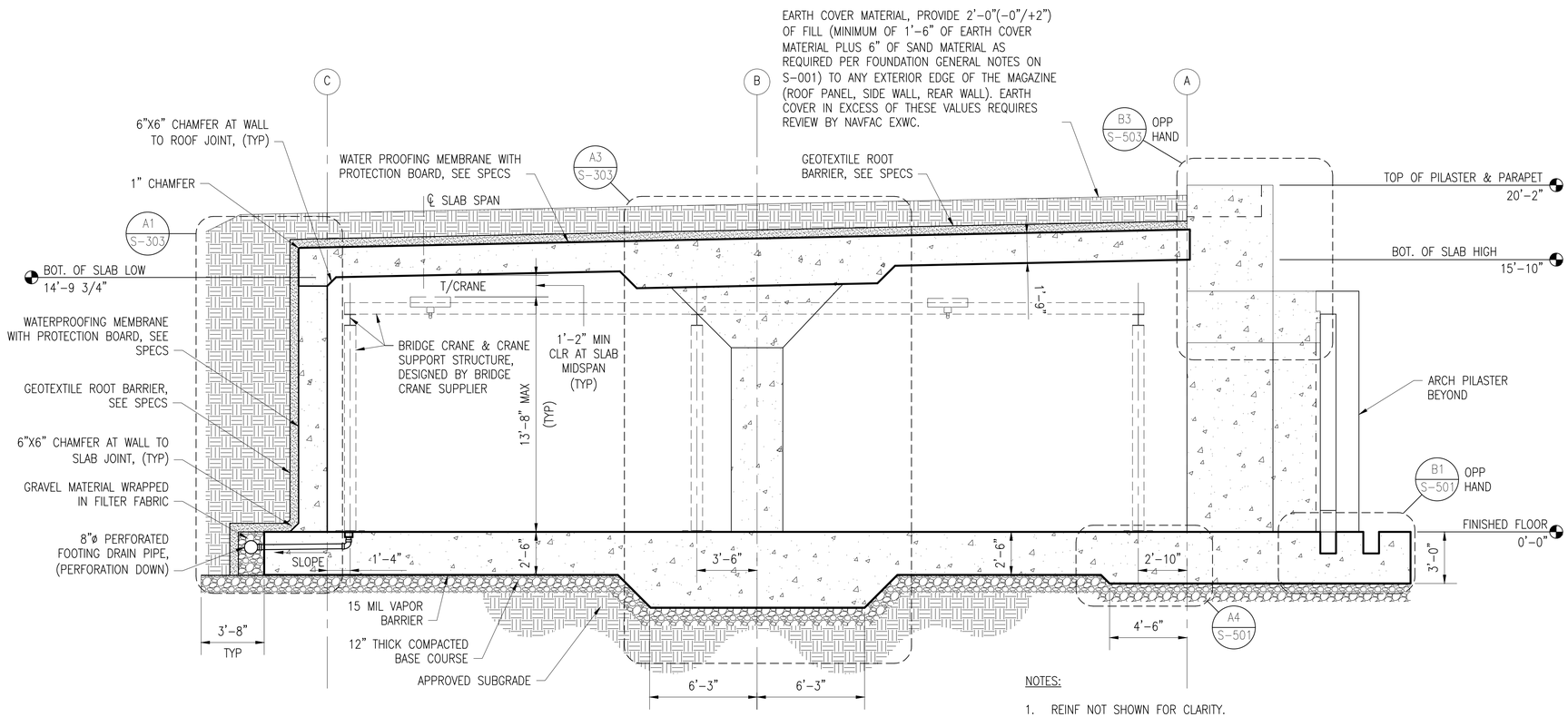

NOTES:

1. REINF NOT SHOWN FOR CLARITY.

B1 SECTION (COLUMN STRIP)

SCALE: 1/4" = 1'-0"

0 2' 4' 8'

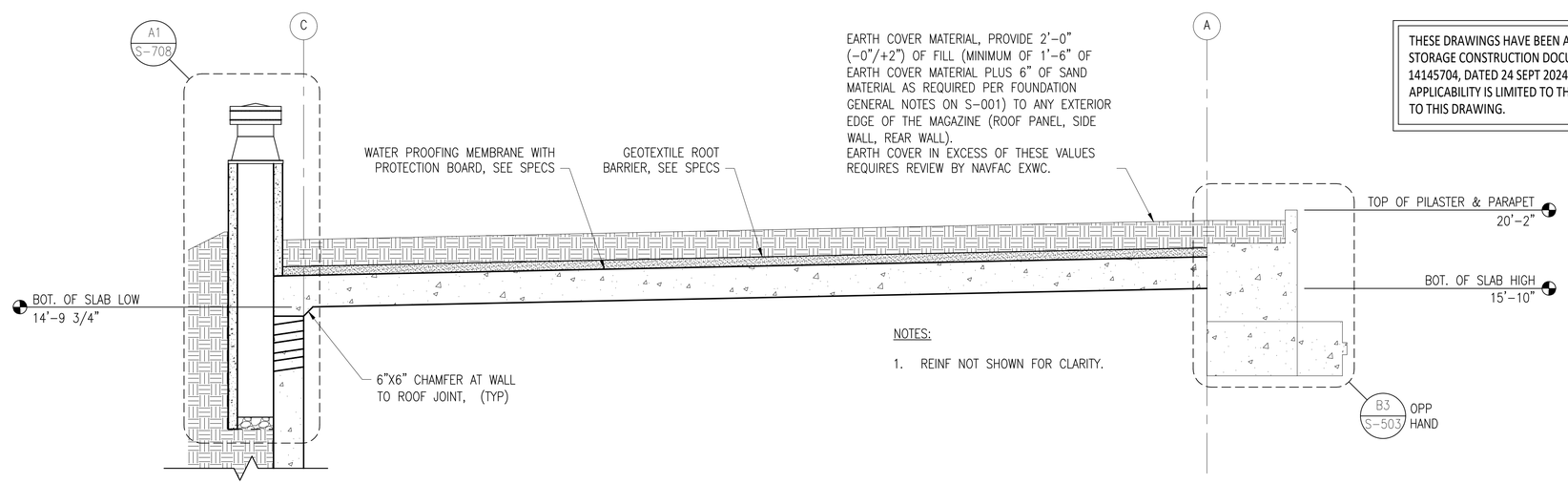

NOTES:

1. REINF NOT SHOWN FOR CLARITY.

THESE DRAWINGS HAVE BEEN ADAPTED FROM APPROVED NAVFAC MUNITIONS STORAGE CONSTRUCTION DOCUMENTS, NAVFAC DRAWING NUMBERS 14145656 TO 14145704, DATED 24 SEPT 2024. JACOBS DOR RESPONSIBILITY AND SEAL APPLICABILITY IS LIMITED TO THE SITE ADAPTATIONS AND MODIFICATIONS MADE TO THIS DRAWING.

A1 SECTION (MIDDLE STRIP)

SCALE: 1/4" = 1'-0"

0 2' 4' 8'

SYM	DESCRIPTION	DATE	APPR

NAVFAC

SEAL

Jacobs
1100 NORTH GLEBE ROAD
SUITE 500
ARLINGTON, VIRGINIA 22201
571.218.1000
FAX: 571.218.1600

A/E INFO

APPROVED
FOR COMMANDER NAVFAC 8/14/2025

ACTIVITY
APPROVED BY LCDR ELIZABETH OLOKODE NAVFAC NLON FEAD DIRECTOR NEW LONDON, GROTON, CT

SATISFACTORY TO DATE 05/27/2025

DES	FJ	DRW	MR	CHK	DW

PM/DM	SMS/CWJ
BRANCH MANAGER	NEK
CHIEF ENG/ARCH	JWJ
FIRE PROTECTION	HPN

DEPARTMENT OF THE NAVY
NAVAL FACILITIES ENGINEERING SYSTEMS COMMAND
MID-ATLANTIC

NAVAL FACILITIES ENGINEERING SYSTEMS COMMAND - MID-ATLANTIC
NAVAL STATION - NORFOLK, VA

NAVAL SUBMARINE BASE NEW LONDON
GROTON, CONNECTICUT

P-1102 WEAPONS MAGAZINE & ORDNANCE OPERATIONS FACILITY
TYPE G MAGAZINE

WALL SECTIONS

SCALE: 1/4" = 1'-0"
EPROJECT NO.: 1667770
CONSTR. CONTR. NO.
NAVFAC DRAWING NO. 12894176
SHEET 24 OF 91

S-301S

FILE NAME: C:\pw_workdir\{den0033.ch2mhill_09050107}\d1710459\S-301S.dwg LAYOUT NAME: S-301S - WALL SECTIONS PLOTTED: Friday, June 13, 2025 - 9:46am USER: 09050107

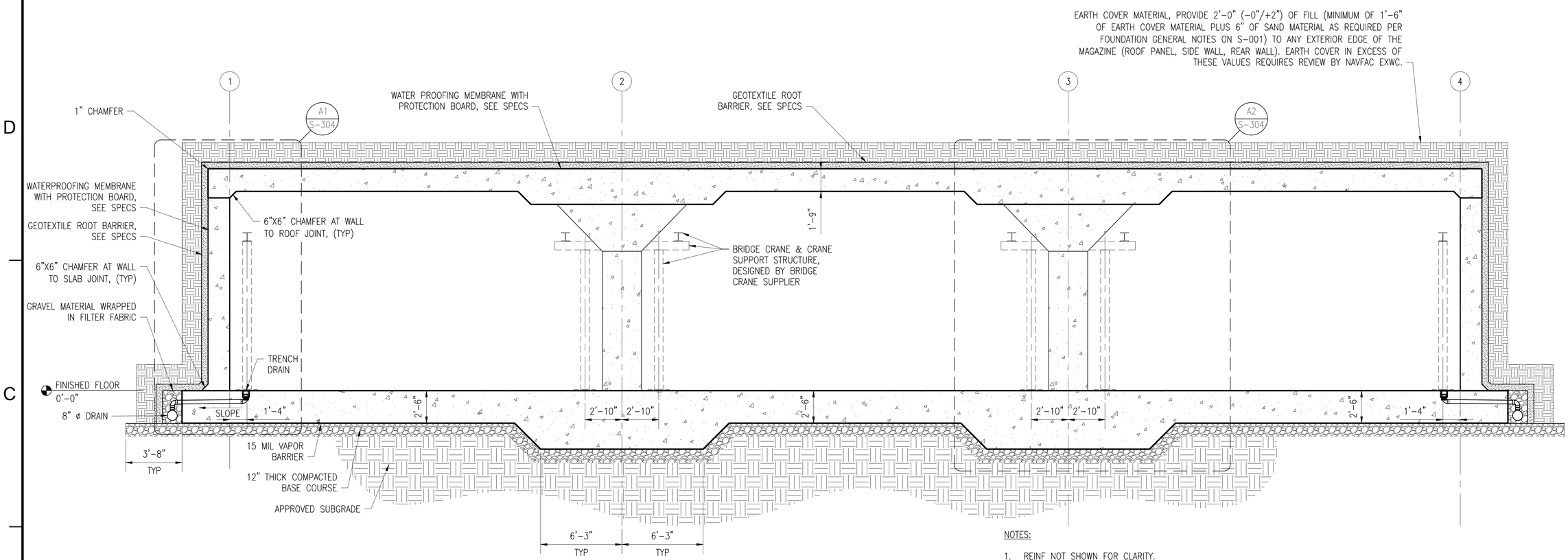

NOTES:

1. REINF NOT SHOWN FOR CLARITY.

B1 SECTION (COLUMN STRIP) LONG

SCALE: 1/4" = 1'-0"

0 2' 4' 8'

THESE DRAWINGS HAVE BEEN ADAPTED FROM APPROVED NAVFAC MUNITIONS STORAGE CONSTRUCTION DOCUMENTS, NAVFAC DRAWING NUMBERS 14145656 TO 14145704, DATED 24 SEPT 2024. JACOBS DOR RESPONSIBILITY AND SEAL APPLICABILITY IS LIMITED TO THE SITE ADAPTATIONS AND MODIFICATIONS MADE TO THIS DRAWING.

SYM	DESCRIPTION	DATE	APPR.

NAVFAC

LAURA ARICO PRESLEY
REGISTERED ENGINEER
AGRICULTURE
COMMERCE
No. 106362
STATE OF TENNESSEE
08/14/2025
SEAL

Jacobs
1100 NORTH GLEBE ROAD
SUITE 500
ARLINGTON, VIRGINIA 22201
571.218.1000
FAX: 571.218.1600

A/E INFO

APPROVED
FOR COMMANDER NAVFAC 8/14/2025

ACTIVITY
APPROVED BY LCDR ELIZABETH OLOKODE NAVFAC NLON FEAD DIRECTOR NEW LONDON, GROTON, CT
SATISFACTORY TO DATE 05/27/2025

DES	FJ	DRW MR	CHK DW
PM/DM			SMS/CWJ
BRANCH MANAGER			NEK
CHIEF ENG/ARCH			JWJ
FIRE PROTECTION			HPN

DEPARTMENT OF THE NAVY
NAVAL FACILITIES ENGINEERING SYSTEMS COMMAND
MID-ATLANTIC

NAVAL FACILITIES ENGINEERING SYSTEMS COMMAND - MID-ATLANTIC
NAVAL STATION - NORFOLK, VA

NAVAL SUBMARINE BASE NEW LONDON
GROTON, CONNECTICUT
P-1102 WEAPONS MAGAZINE & ORDNANCE OPERATIONS FACILITY
TYPE G MAGAZINE

WALL SECTIONS

SCALE: 1/4" = 1'-0"
EPROJECT NO.: 1667770
CONSTR. CONTR. NO.
NAVFAC DRAWING NO. 12894177
SHEET 25 OF 91

S-302S

FILE NAME: C:\pw_workdir\dms003\ch2mhill_09050107\d1710459\S-302S.dwg LAYOUT NAME: S-302S – WALL SECTIONS PLOTTED: Friday, June 13, 2025 – 9:46am USER: 09050107

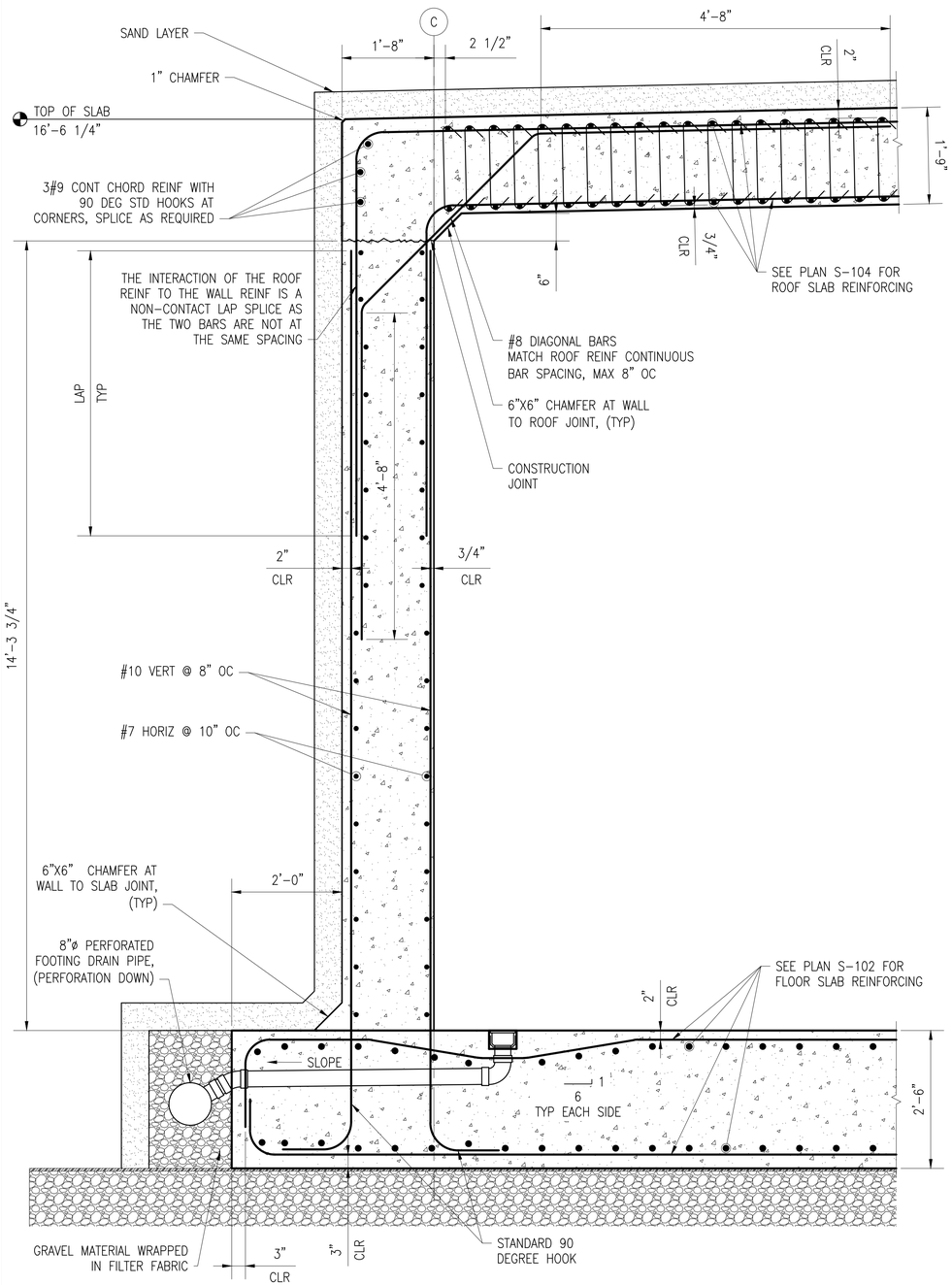

A1 SECTION
SCALE: 3/4" = 1'-0" (S-103)

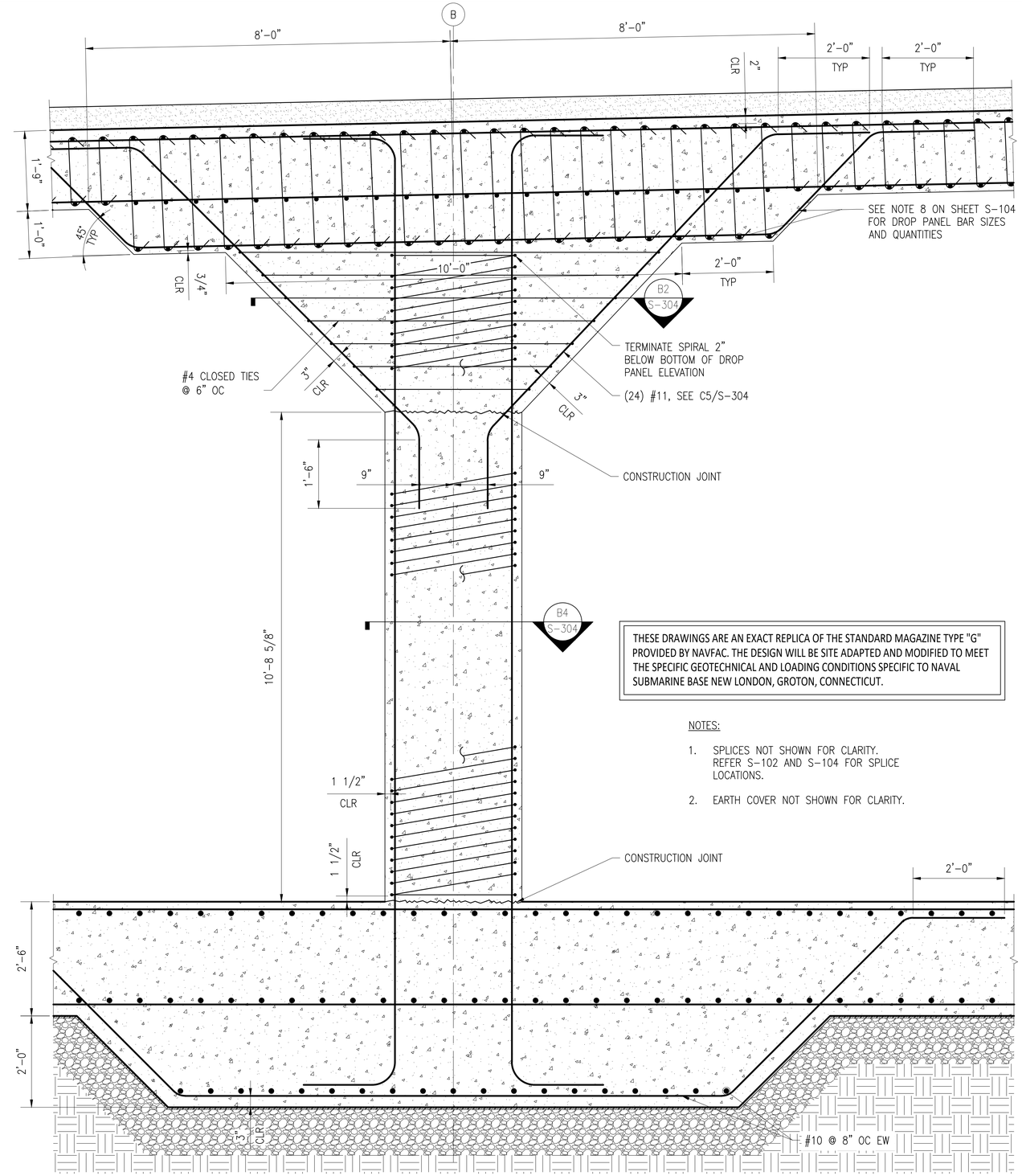

THESE DRAWINGS ARE AN EXACT REPLICA OF THE STANDARD MAGAZINE TYPE "G" PROVIDED BY NAVFAC. THE DESIGN WILL BE SITE ADAPTED AND MODIFIED TO MEET THE SPECIFIC GEOTECHNICAL AND LOADING CONDITIONS SPECIFIC TO NAVAL SUBMARINE BASE NEW LONDON, GROTON, CONNECTICUT.

NOTES:

1. SPLICES NOT SHOWN FOR CLARITY. REFER S-102 AND S-104 FOR SPLICE LOCATIONS.
2. EARTH COVER NOT SHOWN FOR CLARITY.

A3 SECTION
SCALE: 3/4" = 1'-0" (S-103)

SYM	DESCRIPTION	DATE	APPR.

NAVFAC

Jacobs
1100 NORTH GLEBE ROAD
SUITE 500
ARLINGTON, VIRGINIA 22201
571.218.1000
FAX: 571.218.1600

A/E INFO

APPROVED
FOR COMMANDER NAVFAC 8/14/2025

ACTIVITY
APPROVED BY LCDR ELIZABETH OLOKODE NAVFAC NLON FEAD DIRECTOR NEW LONDON, GROTON, CT

SATISFACTORY TO DATE 05/27/2025

DES	FJ	DRW	MR	CHK	DW
PM/DM	SMS/CWJ				
BRANCH MANAGER	NEK				
CHIEF ENG/ARCH	JWJ				
FIRE PROTECTION	HPN				

DEPARTMENT OF THE NAVY
NAVAL FACILITIES ENGINEERING SYSTEMS COMMAND - MID-ATLANTIC
MID-ATLANTIC
NAVAL FACILITIES ENGINEERING SYSTEMS COMMAND
NAVAL STATION - NORFOLK, VA
NAVAL SUBMARINE BASE NEW LONDON
GROTON, CONNECTICUT
P-1102 WEAPONS MAGAZINE & ORDNANCE OPERATIONS FACILITY
TYPE G MAGAZINE
WALL SECTIONS

SCALE: 3/4" = 1'-0"
EPROJECT NO.: 1667770
CONSTR. CONTR. NO.
NAVFAC DRAWING NO. 12894178
SHEET 26 OF 91
S-303

FILE NAME: C:\pw_workdir\dms0033\ch2mhill_09050107\d1710450\S-303.dwg LAYOUT NAME: S-303 - WALL SECTIONS PLOTTED: Friday, June 13, 2025 - 9:46pm USER: 09050107

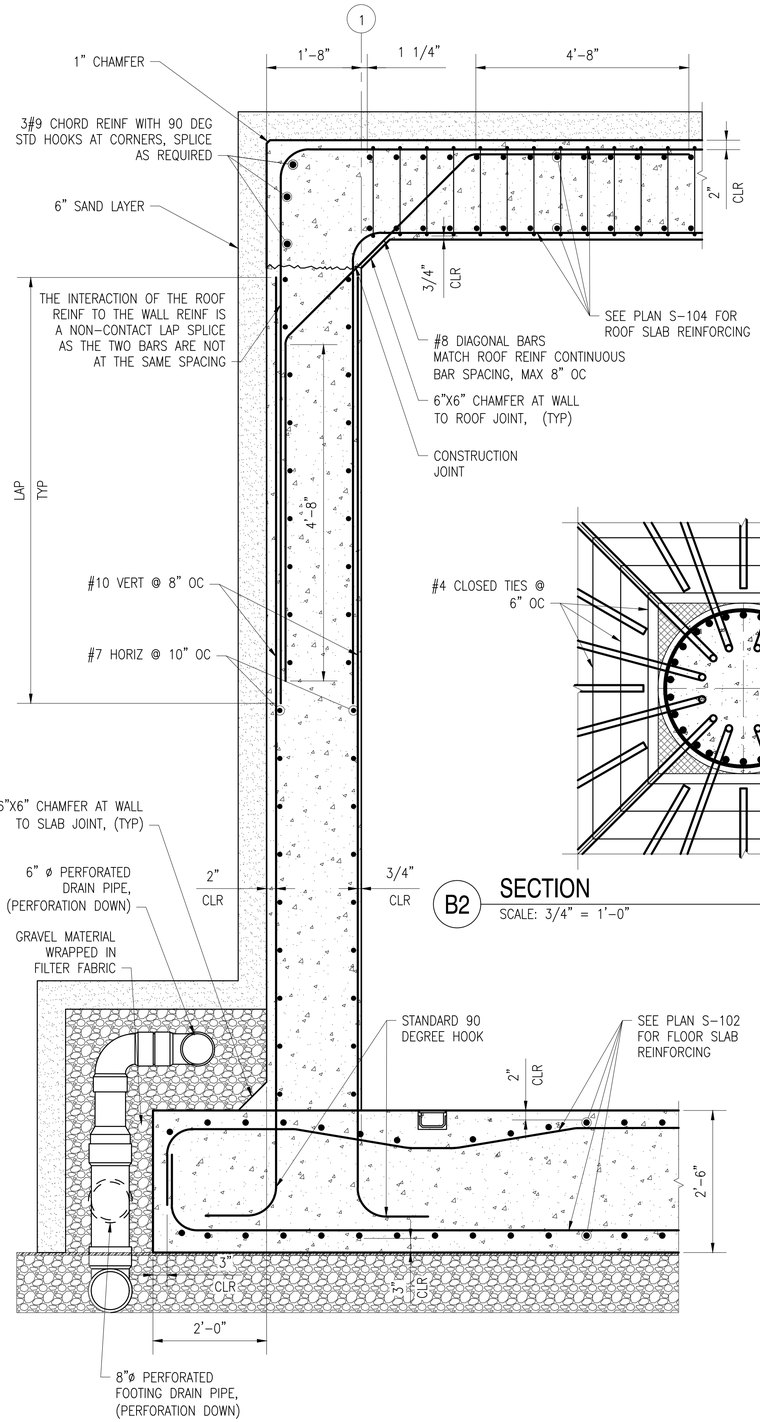

A1 SECTION
SCALE: 3/4" = 1'-0"

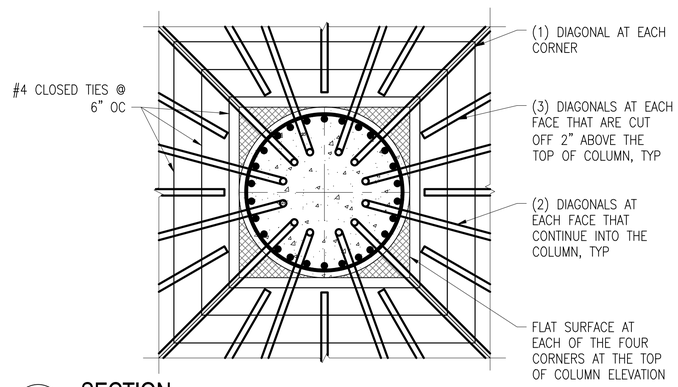

B2 SECTION
SCALE: 3/4" = 1'-0"

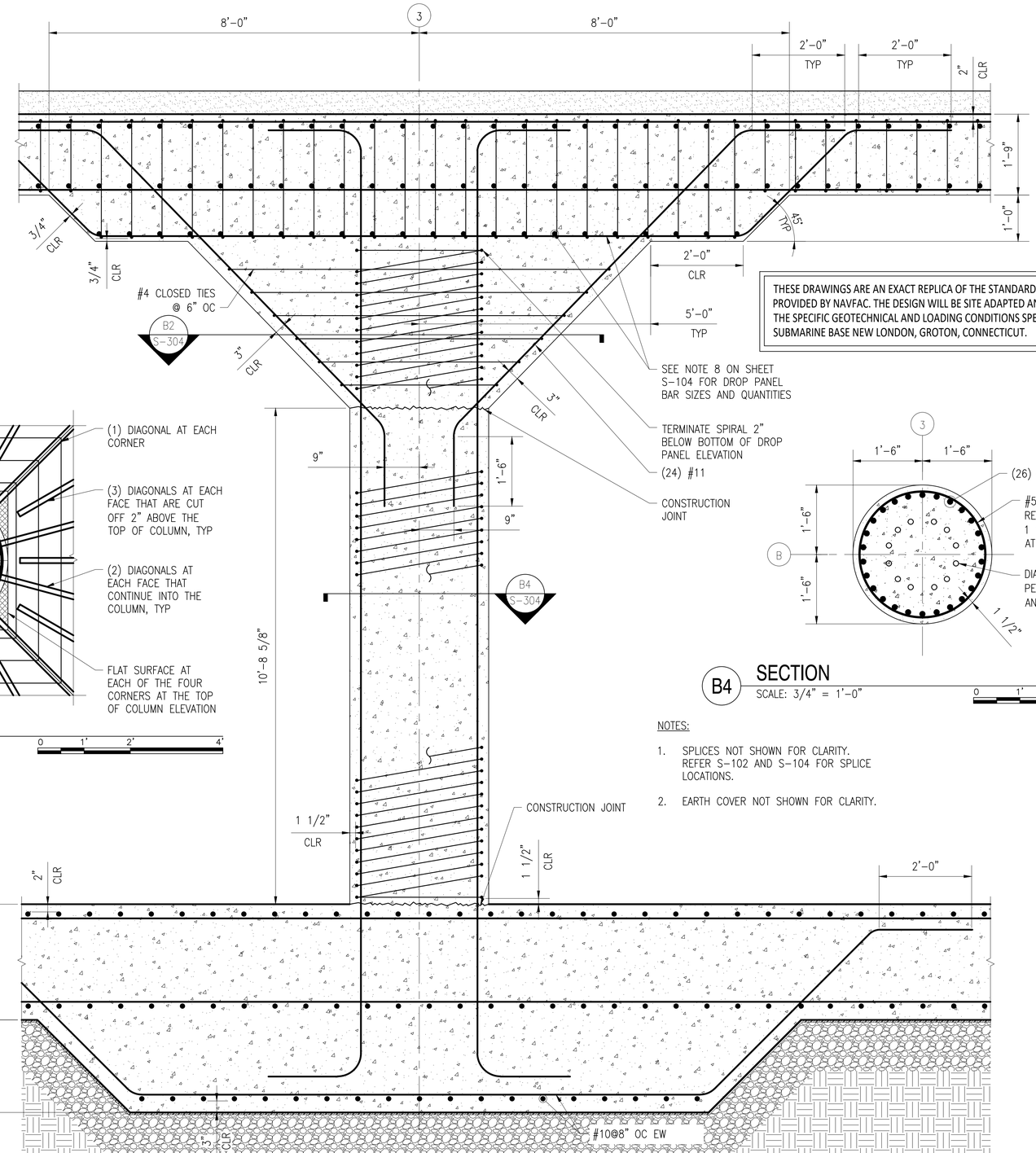

B4 SECTION
SCALE: 3/4" = 1'-0"

THESE DRAWINGS ARE AN EXACT REPLICA OF THE STANDARD MAGAZINE TYPE "G" PROVIDED BY NAVFAC. THE DESIGN WILL BE SITE ADAPTED AND MODIFIED TO MEET THE SPECIFIC GEOTECHNICAL AND LOADING CONDITIONS SPECIFIC TO NAVAL SUBMARINE BASE NEW LONDON, GROTON, CONNECTICUT.

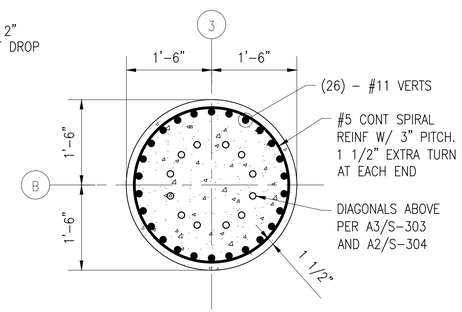

NOTES:

1. SPLICES NOT SHOWN FOR CLARITY. REFER S-102 AND S-104 FOR SPLICE LOCATIONS.
2. EARTH COVER NOT SHOWN FOR CLARITY.

A2 SECTION
SCALE: 3/4" = 1'-0"

SYM	DESCRIPTION	DATE	APPR

NAVFAC

Jacobs
1100 NORTH GLEBE ROAD
SUITE 500
ARLINGTON, VIRGINIA 22201
571.218.1000
FAX: 571.218.1600

A/E INFO

APPROVED
FOR COMMANDER NAVFAC 8/14/2025

ACTIVITY
APPROVED BY LCDR ELIZABETH OLOKODE NAVFAC NLON FEAD DIRECTOR NEW LONDON, GROTON, CT

SATISFACTORY TO DATE 05/27/2025

DES	FJ	DRW	MR	CHK	DW
PM/DM	SMS/CWJ				
BRANCH MANAGER	NEK				
CHIEF ENG/ARCH	JWJ				
FIRE PROTECTION	HPN				

DEPARTMENT OF THE NAVY
NAVAL FACILITIES ENGINEERING SYSTEMS COMMAND
MID-ATLANTIC

NAVAL FACILITIES ENGINEERING SYSTEMS COMMAND - MID-ATLANTIC
NAVAL STATION - NORFOLK, VA

NAVAL SUBMARINE BASE NEW LONDON
GROTON, CONNECTICUT
P-1102 WEAPONS MAGAZINE & ORDNANCE OPERATIONS FACILITY
TYPE G MAGAZINE

WALL SECTIONS

SCALE: 3/4" = 1'-0"
EPROJECT NO.: 1667770
CONSTR. CONTR. NO.
NAVFAC DRAWING NO. 12894179
SHEET 27 OF 91

S-304

FILE NAME: C:\pw_workdir\den0033\pb2mhill_09050107\d1710459\S-304.dwg LAYOUT NAME: S-304 - WALL SECTIONS PLOTTED: Friday, June 13, 2025 - 9:47am USER: 09050107

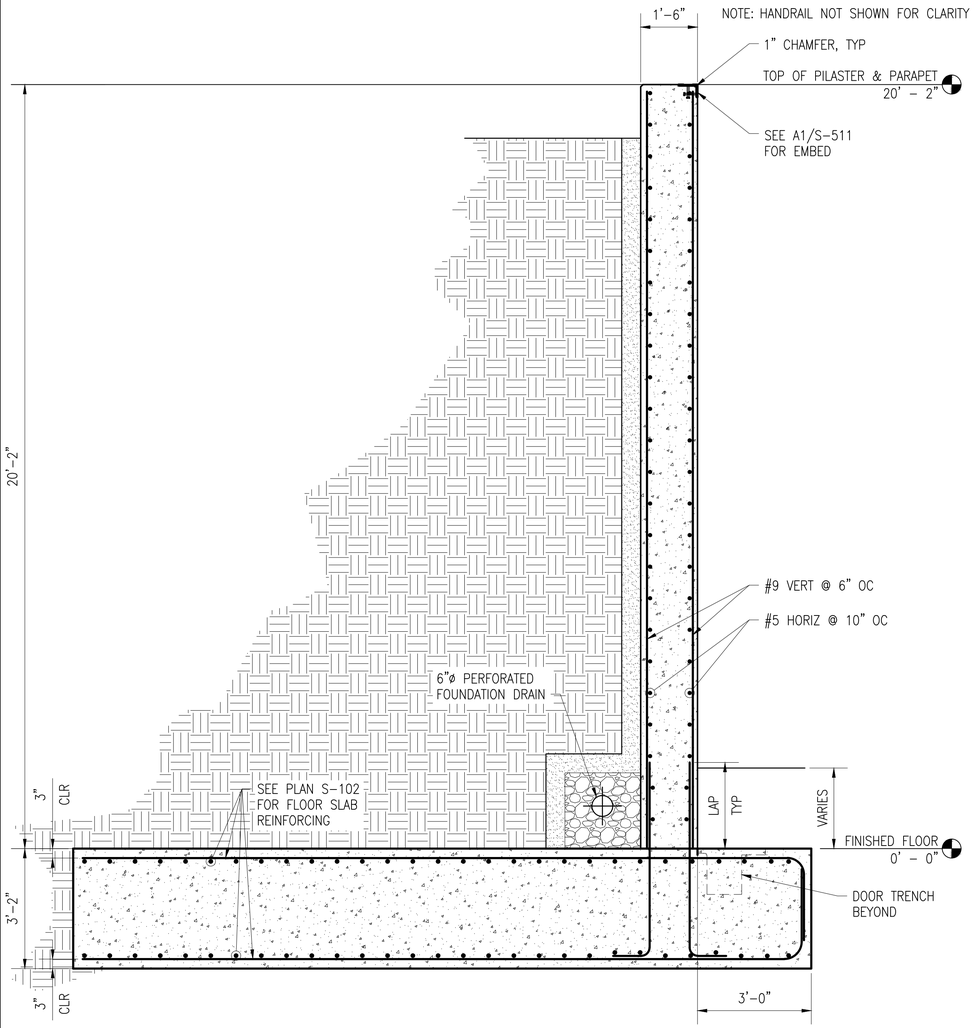

B1 RETAINING WALL SECTION

SCALE: 1/2" = 1'-0"

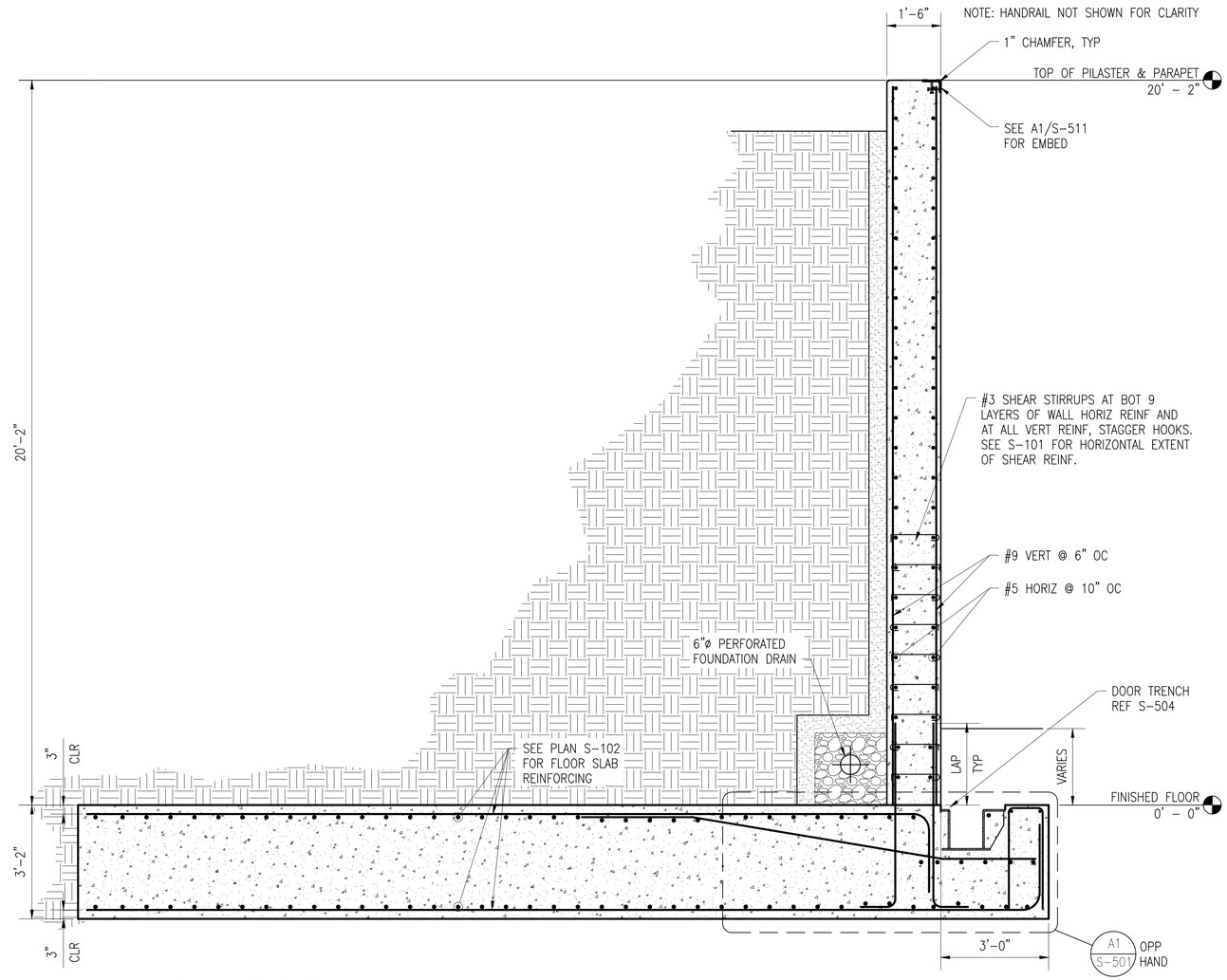

B3 RETAINING WALL SECTION 2

SCALE: 1/2" = 1'-0"

THESE DRAWINGS HAVE BEEN ADAPTED FROM APPROVED NAVFAC MUNITIONS STORAGE CONSTRUCTION DOCUMENTS, NAVFAC DRAWING NUMBERS 14145656 TO 14145704, DATED 24 SEPT 2024. JACOBS DOR RESPONSIBILITY AND SEAL APPLICABILITY IS LIMITED TO THE SITE ADAPTATIONS AND MODIFICATIONS MADE TO THIS DRAWING.

SYM	DESCRIPTION	DATE	APPR.

NAVFAC

SEAL: LAURA ARICO PRESLEY, REGISTERED ENGINEER, AGRICULTURE, COMMERCE, No. 106302, STATE OF TENNESSEE, 06/13/2025

Jacobs
1100 NORTH GLEBE ROAD
SUITE 500
ARLINGTON, VIRGINIA 22201
571.218.1000
FAX: 571.218.1600

A/E INFO

APPROVED
FOR COMMANDER NAVFAC 8/14/2025

ACTIVITY
APPROVED BY LCDR ELIZABETH
CLOKODE NAVFAC NLON FEAD
DIRECTOR NEW LONDON, GROTON, CT

SATISFACTORY TO DATE 05/27/2025

DES	FJ	DRW MR	CHK DW
PM/DM	SMS/CWJ		
BRANCH MANAGER	NEK		
CHIEF ENG/ARCH	JWJ		
FIRE PROTECTION	HPN		

DEPARTMENT OF THE NAVY
NAVAL FACILITIES ENGINEERING SYSTEMS COMMAND
MID-ATLANTIC

NAVAL FACILITIES ENGINEERING SYSTEMS COMMAND - MID-ATLANTIC
NAVAL STATION - NORFOLK, VA

NAVAL SUBMARINE BASE NEW LONDON
GROTON, CONNECTICUT

P-1102 WEAPONS MAGAZINE & ORDNANCE OPERATIONS FACILITY
TYPE G MAGAZINE

WALL SECTIONS

SCALE: 1/2" = 1'-0"
EPROJECT NO.: 1667770
CONSTR. CONTR. NO.
NAVFAC DRAWING NO.
12894180
SHEET 28 OF 91

S-305S

FILE NAME: C:\pw_workdir\dms003\ch2mhill_09050107\d1710459\S-305S.dwg LAYOUT NAME: S-305S – WALL SECTIONS PLOTTED: Friday, June 13, 2025 – 9:47am USER: 09050107

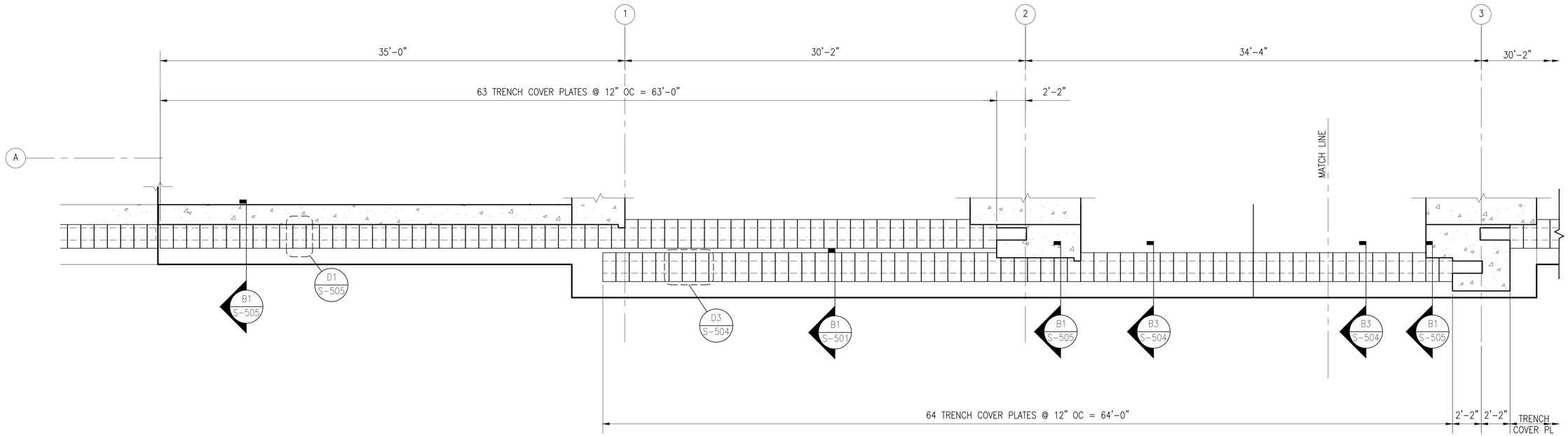

C1 TYPE G-001 TRENCH COVER LAYOUT PLAN

SCALE: 1/4" = 1'-0"

0 2' 4' 8'

THESE DRAWINGS HAVE BEEN ADAPTED FROM APPROVED NAVFAC MUNITIONS STORAGE CONSTRUCTION DOCUMENTS, NAVFAC DRAWING NUMBERS 14145656 TO 14145704, DATED 24 SEPT 2024. JACOBS DOR RESPONSIBILITY AND SEAL APPLICABILITY IS LIMITED TO THE SITE ADAPTATIONS AND MODIFICATIONS MADE TO THIS DRAWING.

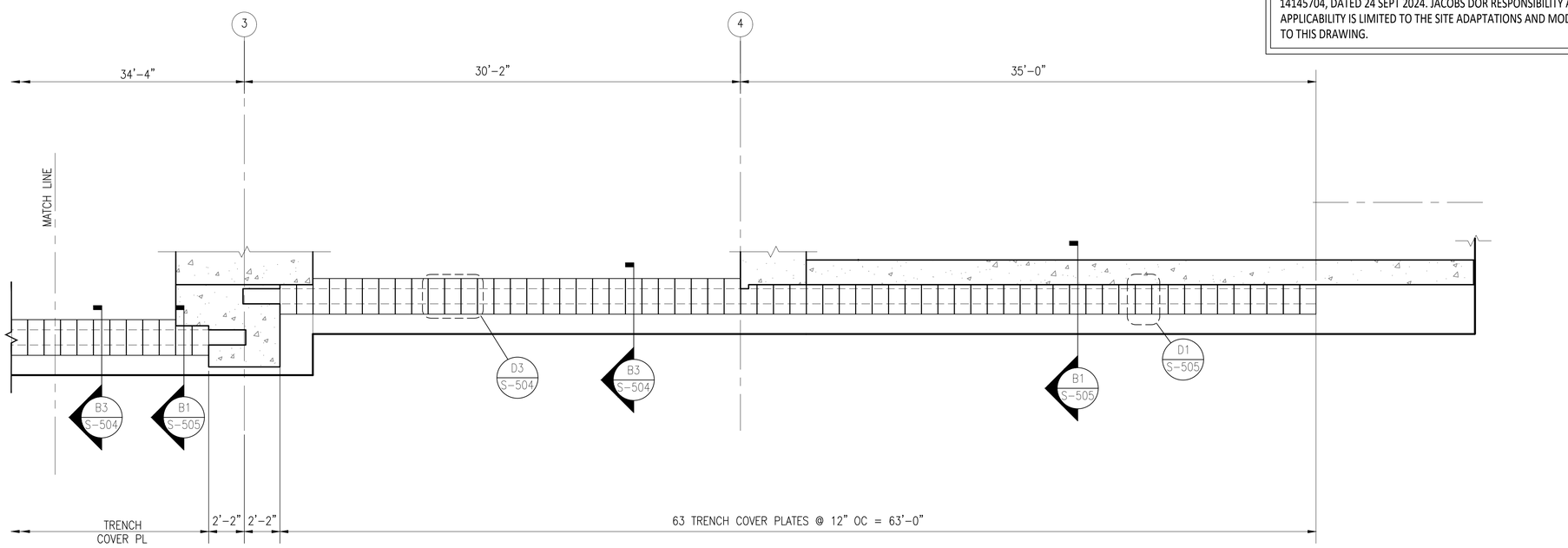

A1 TYPE G-001 TRENCH COVER LAYOUT PLAN

SCALE: 1/4" = 1'-0"

0 2' 4' 8'

SYM	DESCRIPTION	DATE	APPR

NAVFAC

LAURA ARICO PRESLEY REGISTERED ENGINEER AGRICULTURE COMMERCE No. 106362 STATE OF TENNESSEE 06/23/2025

SEAL

Jacobs
1100 NORTH GLEBE ROAD
SUITE 500
ARLINGTON, VIRGINIA 22201
571.218.1000
FAX: 571.218.1600

A/E INFO

APPROVED

FOR COMMANDER NAVFAC 8/14/2025

ACTIVITY APPROVED BY LCDR ELIZABETH OLOKODE NAVFAC NLON FEAD DIRECTOR NEW LONDON, GROTON, CT

SATISFACTORY TO DATE 05/27/2025

DES	FJ	DRW	MR	CHK	DW
PM/DM	SMS/CWJ				
BRANCH MANAGER	NEK				
CHIEF ENG/ARCH	JWJ				
FIRE PROTECTION	HPN				

DEPARTMENT OF THE NAVY
NAVAL FACILITIES ENGINEERING SYSTEMS COMMAND
MID-ATLANTIC
NAVAL FACILITIES ENGINEERING SYSTEMS COMMAND - MID-ATLANTIC
NAVAL STATION - NORFOLK, VA
NAVAL SUBMARINE BASE NEW LONDON
GROTON, CONNECTICUT
P-1102 WEAPONS MAGAZINE & ORDNANCE OPERATIONS FACILITY
TYPE G MAGAZINE

ENLARGED PLANS

SCALE: 1/4" = 1'-0"

EPROJECT NO.: 1667770

CONSTR. CONTR. NO.

NAVFAC DRAWING NO. 12894181

SHEET 29 OF 91

S-401AS

FILE NAME: C:\pw_work\p\dm003\pb2mhlil_09050107\d1710459\S-401AS.dwg LAYOUT NAME: S-401AS – ENLARGED PLANS PLOTTED: Friday, June 13, 2025 – 9:47am USER: 09050107

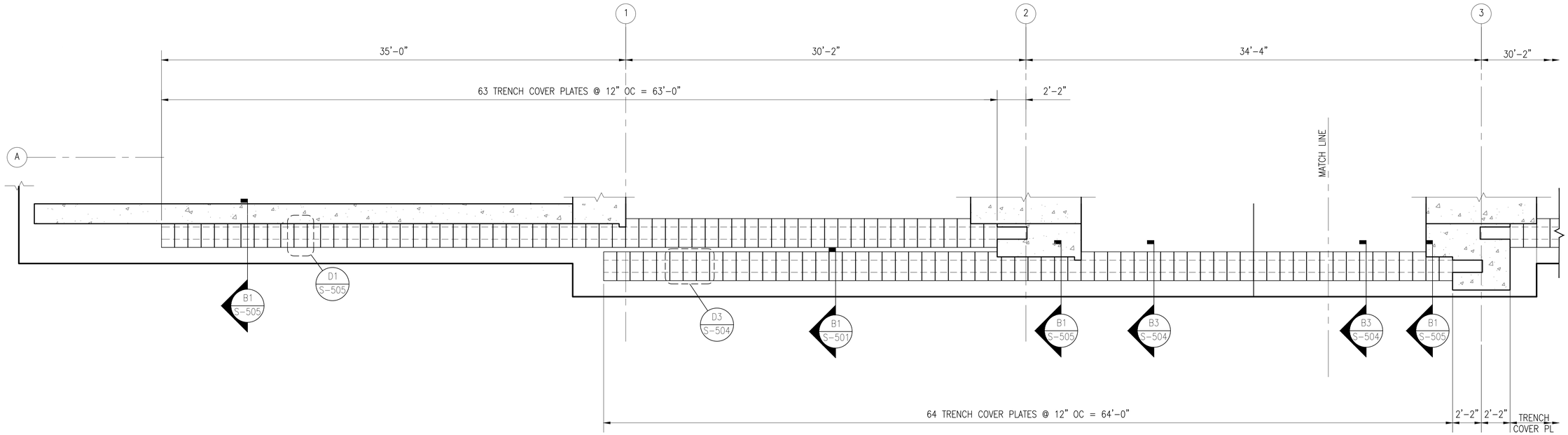

C1 TYPE G-002 TRENCH COVER LAYOUT PLAN

SCALE: 1/4" = 1'-0"

0 2' 4' 8'

THESE DRAWINGS HAVE BEEN ADAPTED FROM APPROVED NAVFAC MUNITIONS STORAGE CONSTRUCTION DOCUMENTS, NAVFAC DRAWING NUMBERS 14145656 TO 14145704, DATED 24 SEPT 2024. JACOBS DOR RESPONSIBILITY AND SEAL APPLICABILITY IS LIMITED TO THE SITE ADAPTATIONS AND MODIFICATIONS MADE TO THIS DRAWING.

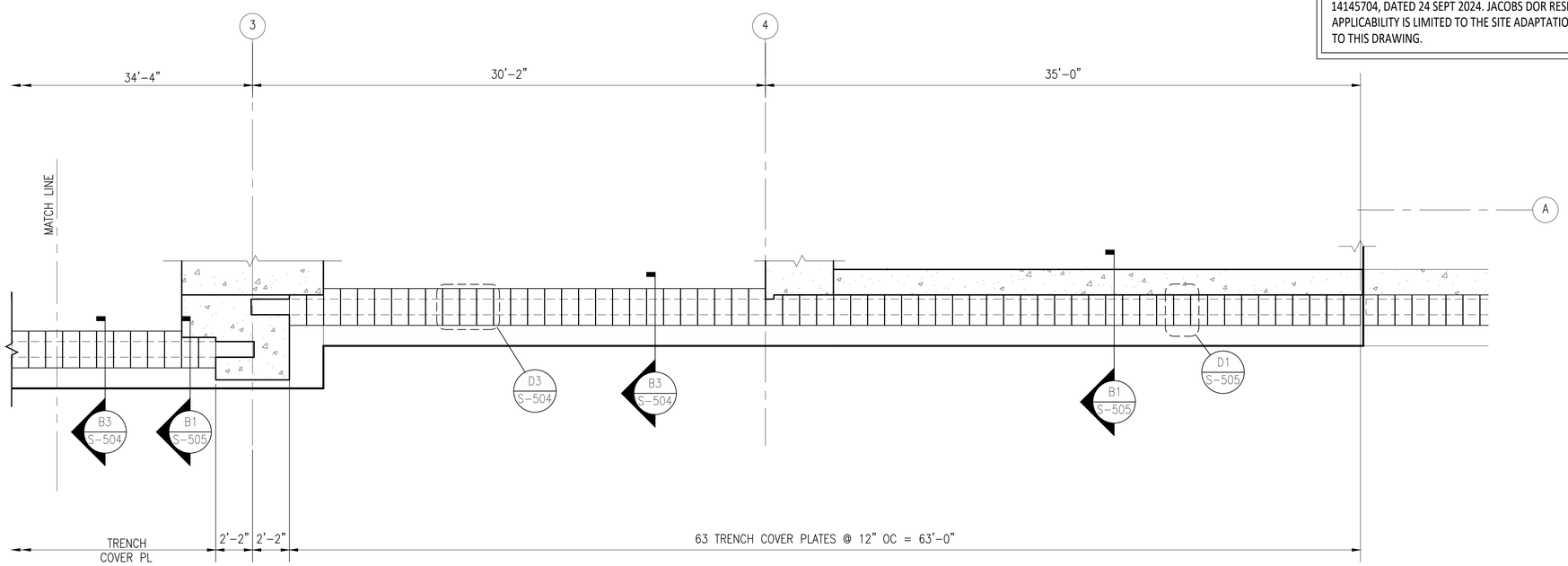

A1 TYPE G-002 TRENCH COVER LAYOUT PLAN

SCALE: 1/4" = 1'-0"

0 2' 4' 8'

SYM	DESCRIPTION	DATE	APPR

NAVFAC

SEAL

Jacobs

1100 NORTH GLEBE ROAD
SUITE 500
ARLINGTON, VIRGINIA 22201
571.218.1000
FAX: 571.218.1600

A/E INFO

APPROVED

FOR COMMANDER NAVFAC 8/14/2025

ACTIVITY APPROVED BY LCDR ELIZABETH OLOKODE NAVFAC NLON FEAD DIRECTOR NEW LONDON, GROTON, CT

SATISFACTORY TO DATE 05/27/2025

DES	FJ	DRW	MR	CHK	DW
PM/DM	SMS/CWJ				
BRANCH MANAGER	NEK				
CHIEF ENG/ARCH	JWJ				
FIRE PROTECTION	HPN				

DEPARTMENT OF THE NAVY
NAVAL FACILITIES ENGINEERING SYSTEMS COMMAND - MID-ATLANTIC
MIDATLANTIC

NAVAL FACILITIES ENGINEERING SYSTEMS COMMAND
NAVAL STATION - NORFOLK, VA

NAVAL SUBMARINE BASE NEW LONDON
GROTON, CONNECTICUT

P-1102 WEAPONS MAGAZINE & ORDNANCE OPERATIONS FACILITY
TYPE G MAGAZINE

ENLARGED PLANS

SCALE: 1/4" = 1'-0"

EPROJECT NO.: 1667770

CONSTR. CONTR. NO.

NAVFAC DRAWING NO. 12894182

SHEET 30 OF 91

S-401BS

FILE NAME: C:\pw_work\dr\dem003\ch2mhill_09050107\d1710459\S-401BS.dwg LAYOUT NAME: S-401BS - ENLARGED PLANS PLOTTED: Friday, June 13, 2025 - 9:48am USER: 09050107

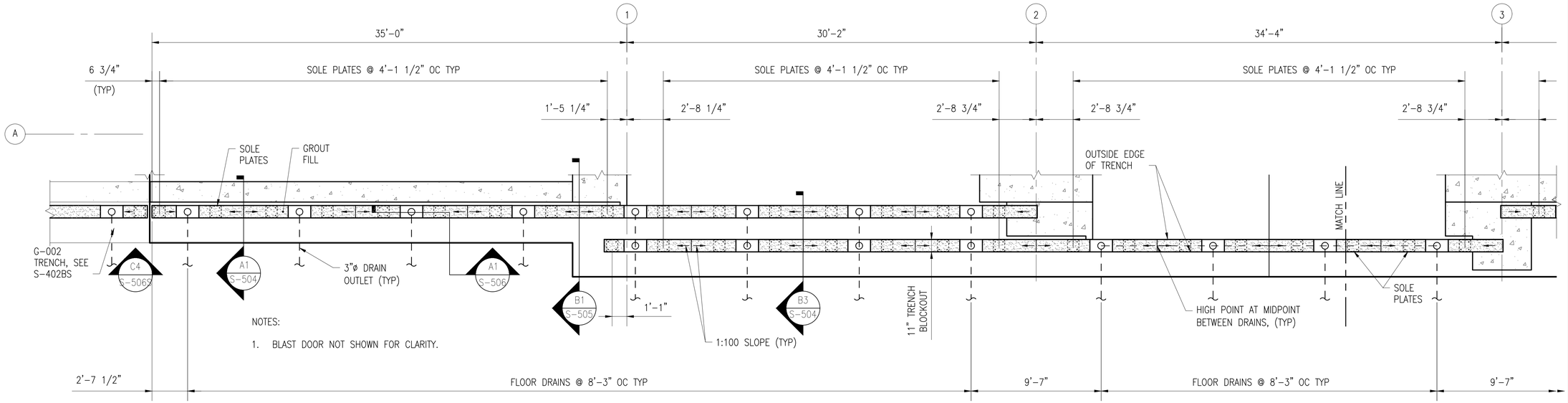

NOTES:

1. BLAST DOOR NOT SHOWN FOR CLARITY.

C1 TYPE G-001 TRENCH LAYOUT PLAN

SCALE: 1/4" = 1'-0"

0 2' 4' 8'

THESE DRAWINGS HAVE BEEN ADAPTED FROM APPROVED NAVFAC MUNITIONS STORAGE CONSTRUCTION DOCUMENTS, NAVFAC DRAWING NUMBERS 14145656 TO 14145704, DATED 24 SEPT 2024. JACOBS DOR RESPONSIBILITY AND SEAL APPLICABILITY IS LIMITED TO THE SITE ADAPTATIONS AND MODIFICATIONS MADE TO THIS DRAWING.

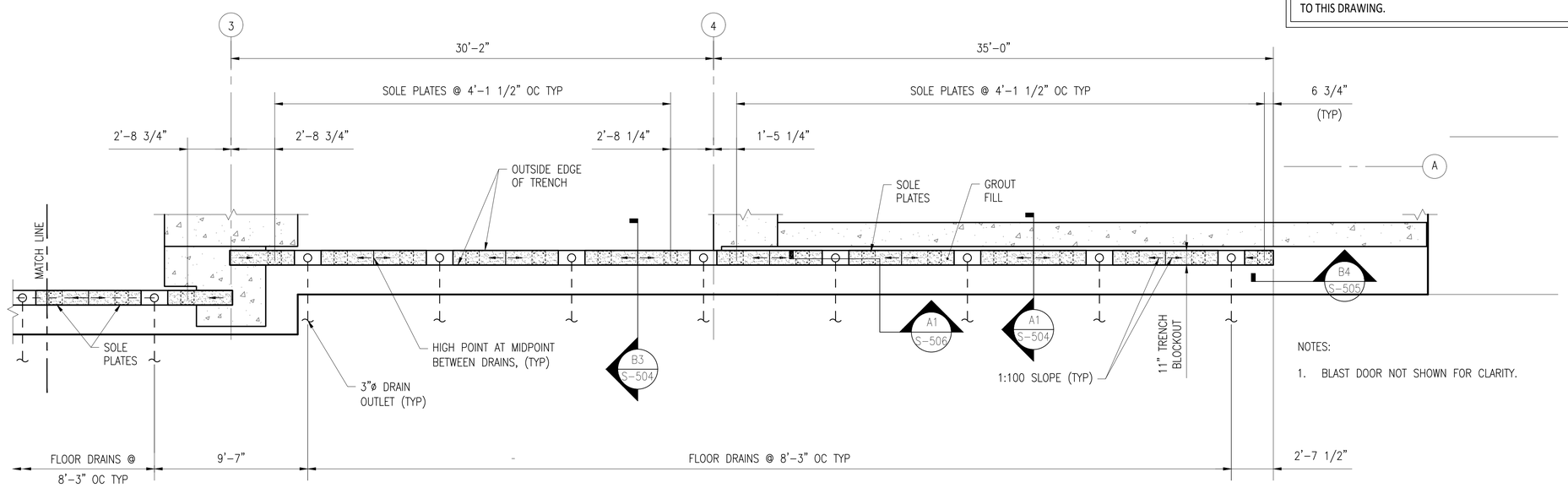

NOTES:

1. BLAST DOOR NOT SHOWN FOR CLARITY.

A1 TYPE G-001 TRENCH LAYOUT PLAN

SCALE: 1/4" = 1'-0"

0 2' 4' 8'

SYM	DESCRIPTION	DATE	APPR.

NAVFAC

SEAL

Jacobs
1100 NORTH GLEBE ROAD
SUITE 500
ARLINGTON, VIRGINIA 22201
571.218.1000
FAX: 571.218.1600

A/E INFO

APPROVED
FOR COMMANDER NAVFAC 8/14/2025

ACTIVITY
APPROVED BY LCDR ELIZABETH OLOKODE NAVFAC NLON FEAD DIRECTOR NEW LONDON, GROTON, CT

SATISFACTORY TO DATE 05/27/2025

DES	FJ	DRW	MR	CHK	DW
PM/DM	SMS/CWJ				
BRANCH MANAGER	NEK				
CHIEF ENG/ARCH	JWJ				
FIRE PROTECTION	HPN				

DEPARTMENT OF THE NAVY
NAVAL FACILITIES ENGINEERING SYSTEMS COMMAND
MID-ATLANTIC

NAVAL FACILITIES ENGINEERING SYSTEMS COMMAND - MID-ATLANTIC
NAVAL STATION - NORFOLK, VA

NAVAL SUBMARINE BASE NEW LONDON

GROTON, CONNECTICUT
P-1102 WEAPONS MAGAZINE & ORDNANCE OPERATIONS FACILITY
TYPE G MAGAZINE

ENLARGED PLANS

SCALE: 1/4" = 1'-0"
EPROJECT NO.: 1667770
CONSTR. CONTR. NO.
NAVFAC DRAWING NO. 12894183
SHEET 31 OF 91

S-402AS

FILE NAME: C:\pw_workdir\dms003\ch2mhill_09050107\d1710459\S-402AS.dwg LAYOUT NAME: S-402AS - ENLARGED PLANS PLOTTED: Friday, June 13, 2025 - 8:48am USER: 09050107

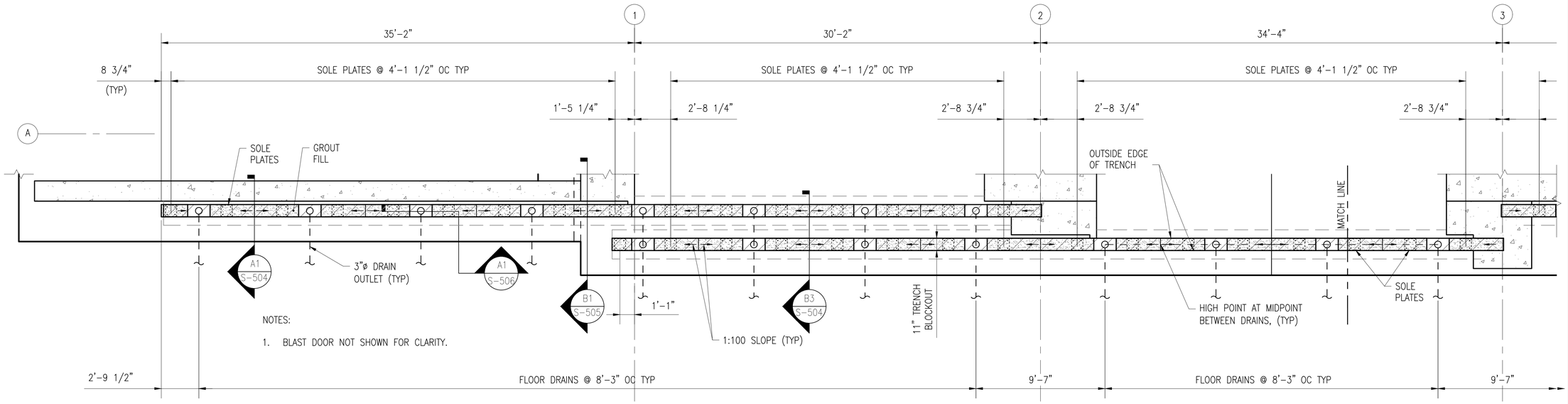

C1 TYPE G-002 TRENCH LAYOUT PLAN

SCALE: 1/4" = 1'-0"

0 2' 4' 8'

THESE DRAWINGS HAVE BEEN ADAPTED FROM APPROVED NAVFAC MUNITIONS STORAGE CONSTRUCTION DOCUMENTS, NAVFAC DRAWING NUMBERS 14145656 TO 14145704, DATED 24 SEPT 2024. JACOBS DOR RESPONSIBILITY AND SEAL APPLICABILITY IS LIMITED TO THE SITE ADAPTATIONS AND MODIFICATIONS MADE TO THIS DRAWING.

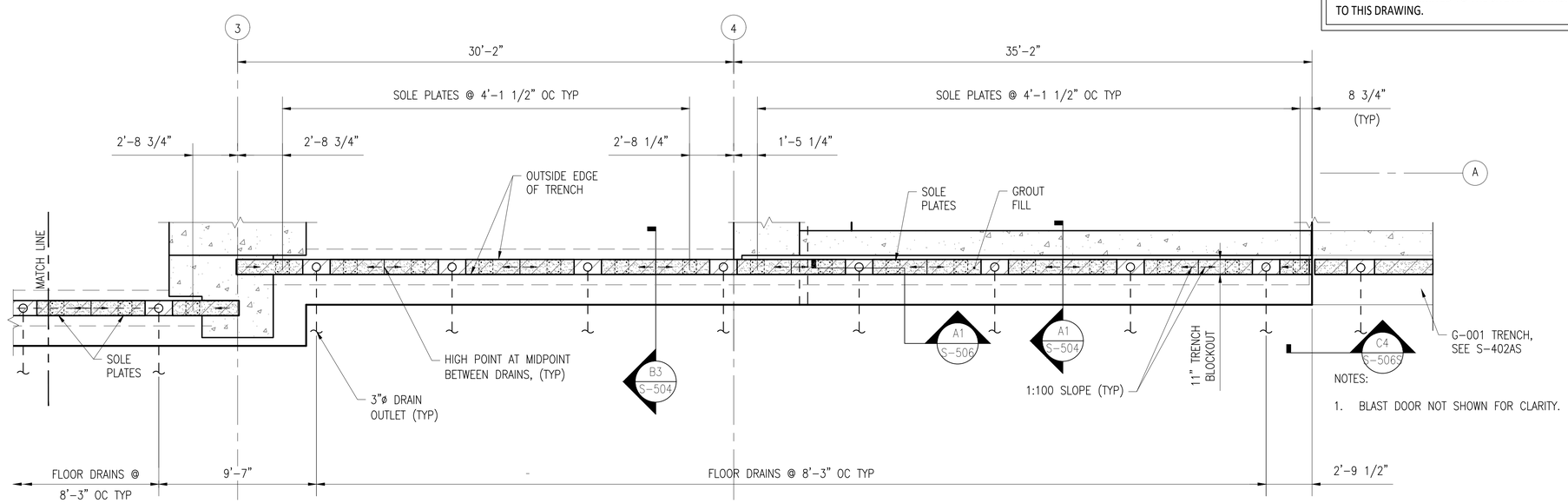

A1 TYPE G-002 TRENCH LAYOUT PLAN

SCALE: 1/4" = 1'-0"

0 2' 4' 8'

APPR.	DATE	DESCRIPTION	SYM.

NAVFAC

SEAL

Jacobs
1100 NORTH GLEBE ROAD
SUITE 500
ARLINGTON, VIRGINIA 22201
571.218.1000
FAX: 571.218.1600

A/E INFO

APPROVED

FOR COMMANDER NAVFAC 8/14/2025

ACTIVITY
APPROVED BY LCDR ELIZABETH OLOKODE NAVFAC NLON FEAD DIRECTOR NEW LONDON, GROTON, CT

SATISFACTORY TO DATE 05/27/2025

DES FJ	DRW MR	CHK DW
PM/DM	SMS/CWJ	
BRANCH MANAGER	NEK	
CHIEF ENG/ARCH	JWJ	
FIRE PROTECTION	HPN	

DEPARTMENT OF THE NAVY
NAVAL FACILITIES ENGINEERING SYSTEMS COMMAND
MID-ATLANTIC

NAVAL FACILITIES ENGINEERING SYSTEMS COMMAND
NAVAL STATION - NORFOLK VA
NAVAL FACILITIES ENGINEERING SYSTEMS COMMAND - MID-ATLANTIC

NAVAL SUBMARINE BASE NEW LONDON
GROTON, CONNECTICUT

P-1102 WEAPONS MAGAZINE & ORDNANCE OPERATIONS FACILITY
TYPE G MAGAZINE

ENLARGED PLANS

SCALE: 1/4" = 1'-0"
EPROJECT NO.: 1667770
CONSTR. CONTR. NO.

NAVFAC DRAWING NO.
12894184

SHEET 32 OF 91

S-402BS

FILE NAME: C:\pw_workdir\den003\ch2mhill_09050107\d1710459\S-402BS - ENLARGED PLANS PLOTTED: Friday, June 13, 2025 - 9:48am USER: 09050107

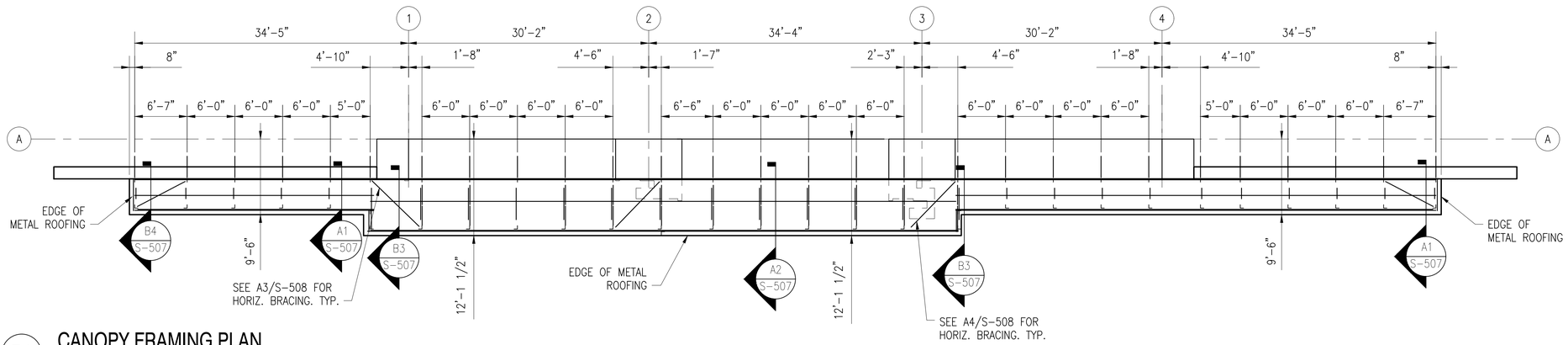

B1 CANOPY FRAMING PLAN

SCALE: 1/8" = 1'-0"

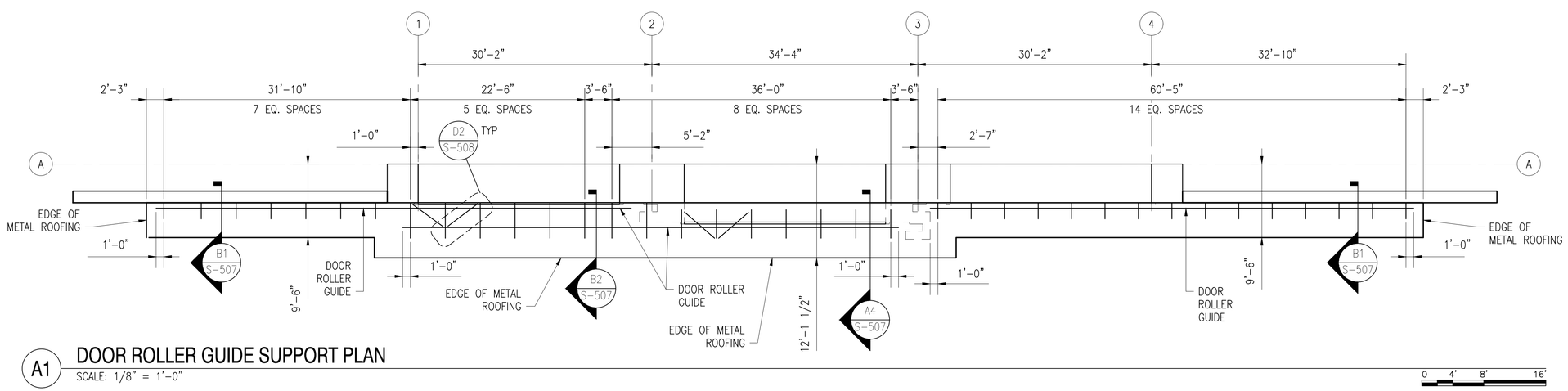

A1 DOOR ROLLER GUIDE SUPPORT PLAN

SCALE: 1/8" = 1'-0"

THESE DRAWINGS ARE AN EXACT REPLICA OF THE STANDARD MAGAZINE TYPE "G" PROVIDED BY NAVFAC. THE DESIGN WILL BE SITE ADAPTED AND MODIFIED TO MEET THE SPECIFIC GEOTECHNICAL AND LOADING CONDITIONS SPECIFIC TO NAVAL SUBMARINE BASE NEW LONDON, GROTON, CONNECTICUT.

SYM	DESCRIPTION	DATE	APPR.

NAVFAC

SEAL

Jacobs
1100 NORTH GLEBE ROAD
SUITE 500
ARLINGTON, VIRGINIA 22201
571.218.1000
FAX: 571.218.1600

A/E INFO

APPROVED

FOR COMMANDER NAVFAC 8/14/2025

ACTIVITY
APPROVED BY LCDR ELIZABETH OLOKODE NAVFAC NLON FEAD DIRECTOR NEW LONDON, GROTON, CT

SATISFACTORY TO DATE 05/27/2025

DES FJ DRW MR CHK DW

PM/DM SMS/CWJ
BRANCH MANAGER NEK
CHIEF ENG/ARCH JVJ
FIRE PROTECTION HPN

DEPARTMENT OF THE NAVY
NAVAL FACILITIES ENGINEERING SYSTEMS COMMAND
MID-ATLANTIC

NAVAL FACILITIES ENGINEERING SYSTEMS COMMAND - MID-ATLANTIC
NAVAL STATION - NORFOLK, VA

NAVAL SUBMARINE BASE NEW LONDON
GROTON, CONNECTICUT
P-1102 WEAPONS MAGAZINE & ORDNANCE OPERATIONS FACILITY
TYPE G MAGAZINE

ENLARGED PLANS

SCALE: 1/8" = 1'-0"
EPROJECT NO.: 1667770
CONSTR. CONTR. NO.
NAVFAC DRAWING NO. 12894185
SHEET 33 OF 91

S-403

FILE NAME: C:\pw_workdir\den0033\pb2mhill_09050107\d1710459\S-403.dwg LAYOUT NAME: S-403 - ENLARGED PLANS PLOTTED: Friday, June 13, 2025 - 9:49am USER: 09050107

THESE DRAWINGS ARE AN EXACT REPLICA OF THE STANDARD MAGAZINE TYPE "G" PROVIDED BY NAVFAC. THE DESIGN WILL BE SITE ADAPTED AND MODIFIED TO MEET THE SPECIFIC GEOTECHNICAL AND LOADING CONDITIONS SPECIFIC TO NAVAL SUBMARINE BASE NEW LONDON, GROTON, CONNECTICUT.

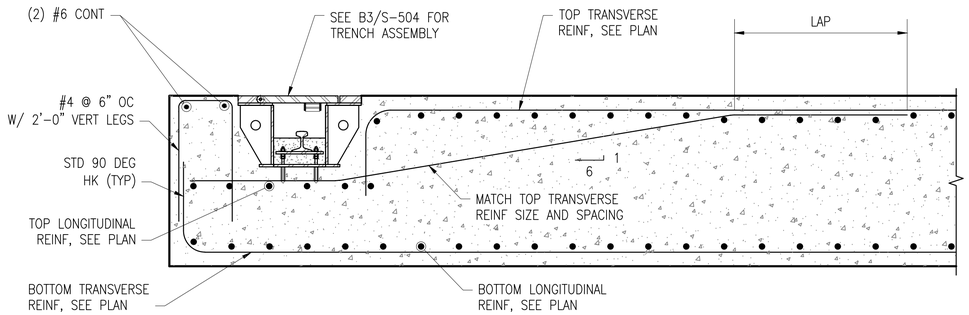

D1 REINFORCEMENT AT TRENCH

SCALE: 3/4" = 1'-0"

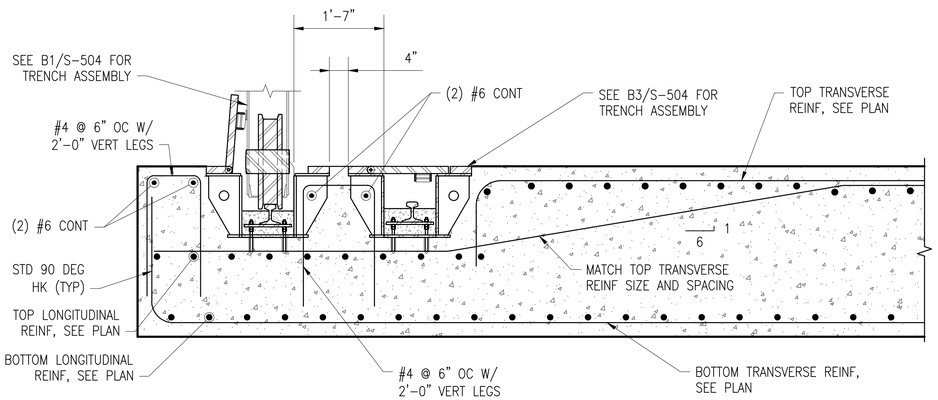

B1 REINFORCEMENT AT DOUBLE TRENCHES

SCALE: 3/4" = 1'-0"

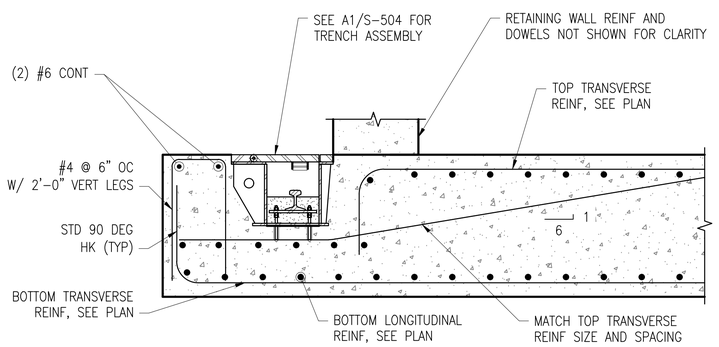

A1 REINFORCEMENT AT TRENCH AT RETAINING WALL

SCALE: 3/4" = 1'-0"

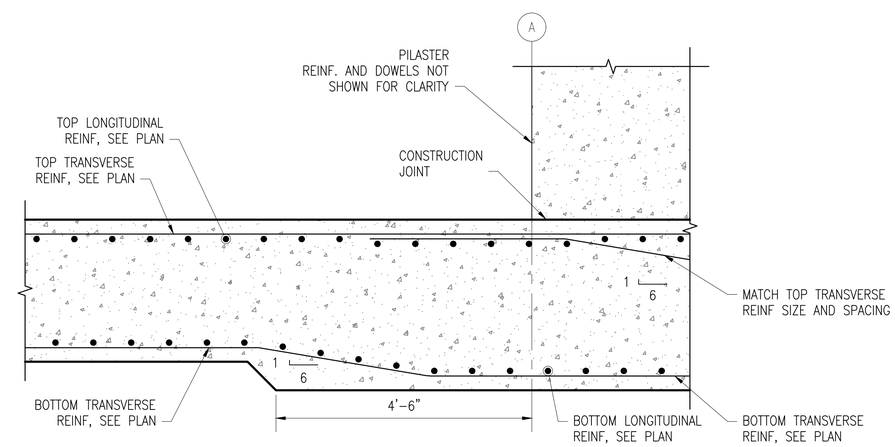

A4 REINFORCEMENT AT SLAB STEP

SCALE: 3/4" = 1'-0"

SYM	DESCRIPTION	DATE	APPR.

NAVFAC

SEAL

Jacobs
1100 NORTH GLEBE ROAD
SUITE 500
ARLINGTON, VIRGINIA 22201
571.218.1000
FAX: 571.218.1600

A/E INFO

APPROVED
FOR COMMANDER NAVFAC 8/14/2025

ACTIVITY
APPROVED BY LCDR ELIZABETH OLOKODE NAVFAC NLON FEAD DIRECTOR NEW LONDON, GROTON, CT

SATISFACTORY TO DATE 05/27/2025

DES	FJ	DRW MR	CHK DW
PM/DM	SMS/CWJ		
BRANCH MANAGER	--		
CHIEF ENG/ARCH	JWJ		
FIRE PROTECTION	HPN		

DEPARTMENT OF THE NAVY
NAVAL FACILITIES ENGINEERING SYSTEMS COMMAND
MIDATLANTIC
NAVAL FACILITIES ENGINEERING SYSTEMS COMMAND - MID-ATLANTIC
NAVAL STATION - NORFOLK, VA
NAVAL SUBMARINE BASE NEW LONDON
GROTON, CONNECTICUT
P-1102 WEAPONS MAGAZINE & ORDNANCE OPERATIONS FACILITY
TYPE G MAGAZINE
DOOR TRENCH AND COVER DETAILS

SCALE: 3/4" = 1'-0"
EFPROJECT NO.: 1667770
CONSTR. CONTR. NO.
NAVFAC DRAWING NO. 12894186
SHEET 34 OF 91

S-501

FILE NAME: C:\pw_workdir\dem0031\ch2mhill_09050107\d1710459\S-501.dwg LAYOUT NAME: S-501 - PILASTER REINF DETAILS PLOTTED: Friday, June 13, 2025 - 9:49am USER: 09050107

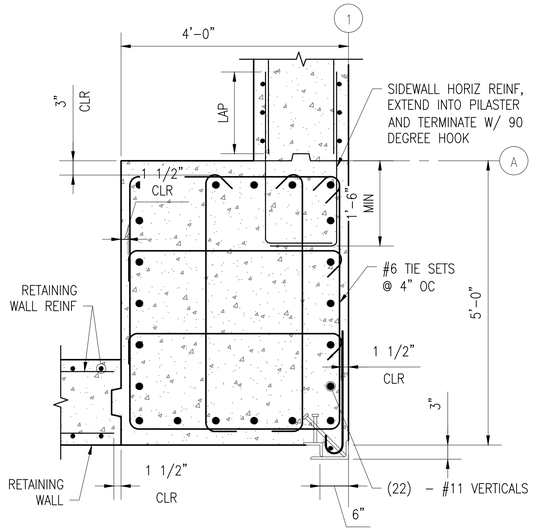

C1 PILASTER CORNER PLAN
SCALE: 3/4" = 1'-0"

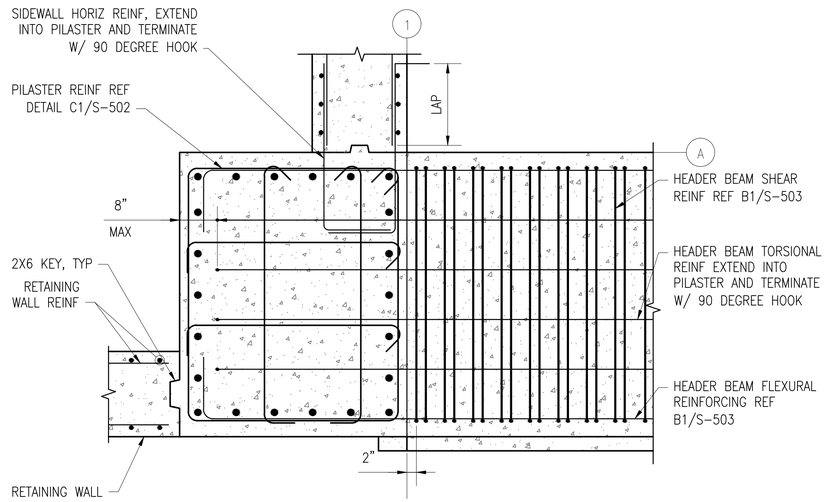

C2 PILASTER CORNER THRU HEADER BEAM
SCALE: 3/4" = 1'-0"

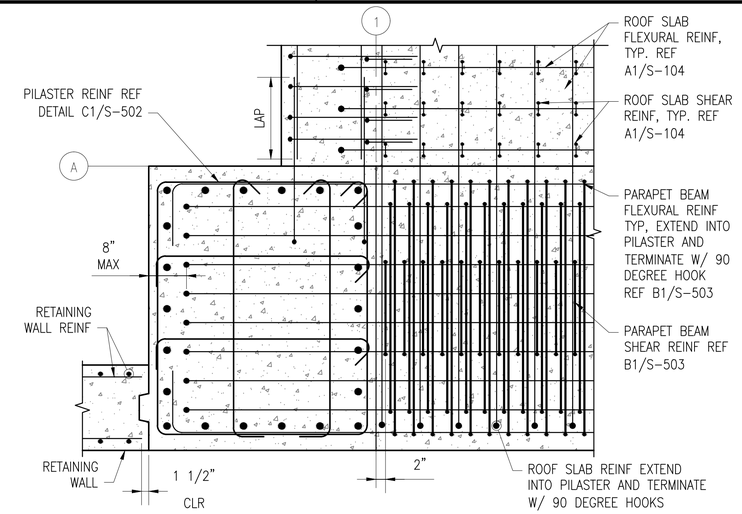

C4 PILASTER CORNER THRU PARAPET BEAM/ ROOF SLAB
SCALE: 3/4" = 1'-0"

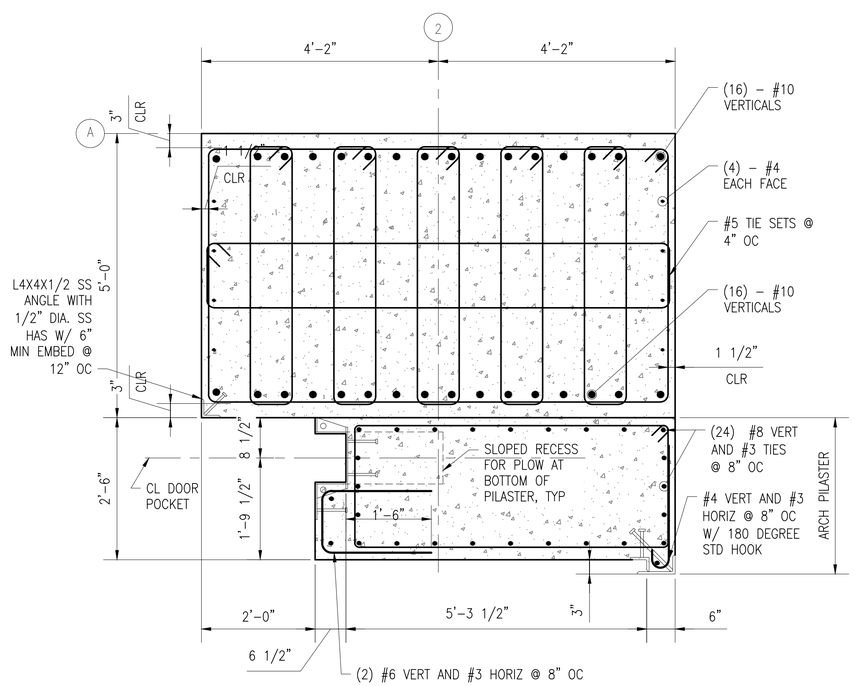

A1 PILASTER MIDDLE LEFT PLAN
SCALE: 3/4" = 1'-0"

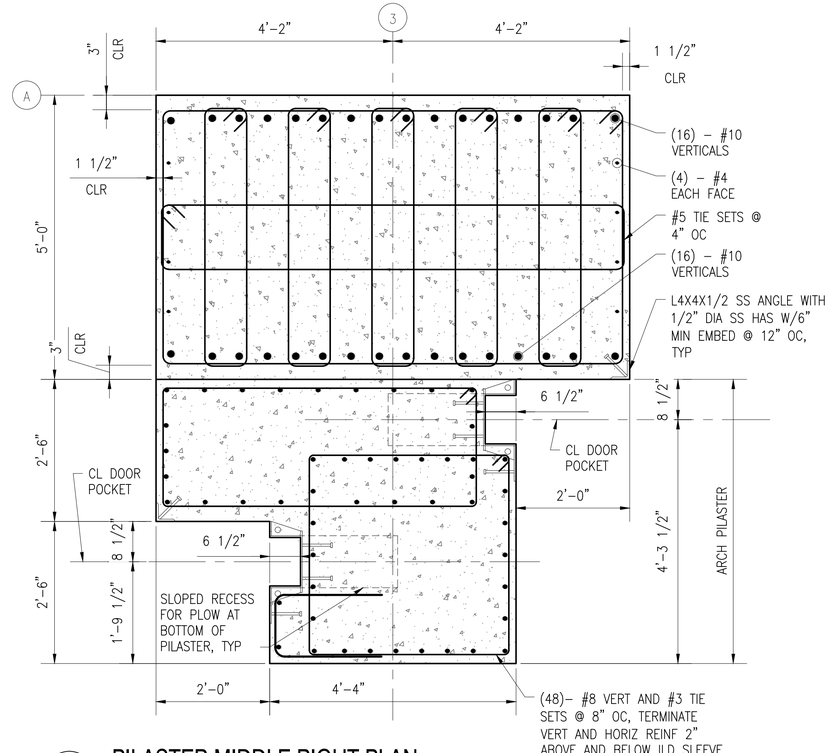

A2 PILASTER MIDDLE RIGHT PLAN
SCALE: 3/4" = 1'-0"

THESE DRAWINGS ARE AN EXACT REPLICA OF THE STANDARD MAGAZINE TYPE "G" PROVIDED BY NAVFAC. THE DESIGN WILL BE SITE ADAPTED AND MODIFIED TO MEET THE SPECIFIC GEOTECHNICAL AND LOADING CONDITIONS SPECIFIC TO NAVAL SUBMARINE BASE NEW LONDON, GROTON, CONNECTICUT.

SYM	DESCRIPTION	DATE	APPR.

Jacobs
1100 NORTH GLEBE ROAD
SUITE 500
ARLINGTON, VIRGINIA 22201
571.218.1000
FAX: 571.218.1600

A/E INFO

APPROVED
FOR COMMANDER NAVFAC 8/14/2025

ACTIVITY
APPROVED BY LCDR ELIZABETH OLOKODE NAVFAC NLON FEAD DIRECTOR NEW LONDON, GROTON, CT

SATISFACTORY TO DATE 05/27/2025

DES	FJ	DRW	MR	CHK	DW

PM/DM	SMS/CWJ
BRANCH MANAGER	NEK
CHIEF ENG/ARCH	JWJ
FIRE PROTECTION	HPN

DEPARTMENT OF THE NAVY
NAVAL FACILITIES ENGINEERING SYSTEMS COMMAND
MID-ATLANTIC

NAVAL FACILITIES ENGINEERING SYSTEMS COMMAND - MID-ATLANTIC
NAVAL STATION - NORFOLK, VA

NAVAL SUBMARINE BASE NEW LONDON
GROTON, CONNECTICUT

P-1102 WEAPONS MAGAZINE & ORDNANCE OPERATIONS FACILITY
TYPE G MAGAZINE

PILASTER REINF DETAILS

SCALE: 3/4" = 1'-0"
EPROJECT NO.: 1667770
CONSTR. CONTR. NO.
NAVFAC DRAWING NO. 12894187
SHEET 35 OF 91

S-502

SEAL

FILE NAME: C:\pw_work\dir\jdenf033\ch2mhill_09050107\d1710459\S-502.dwg LAYOUT NAME: S-502 – PILASTER REINF DETAILS PLOTTED: Friday, June 13, 2025 – 9:49am USER: 09050107

THESE DRAWINGS ARE AN EXACT REPLICA OF THE STANDARD MAGAZINE TYPE "G" PROVIDED BY NAVFAC. THE DESIGN WILL BE SITE ADAPTED AND MODIFIED TO MEET THE SPECIFIC GEOTECHNICAL AND LOADING CONDITIONS SPECIFIC TO NAVAL SUBMARINE BASE NEW LONDON, GROTON, CONNECTICUT.

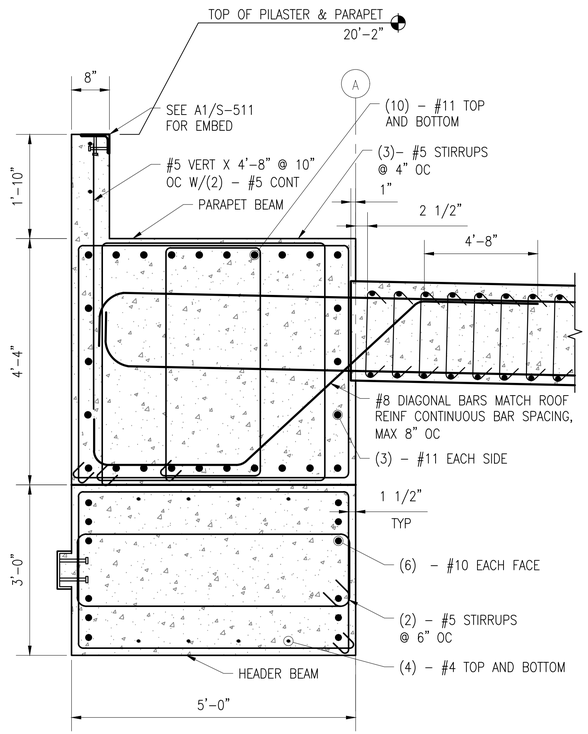

B1 HEADER BEAM CORNER SECTION
SCALE: 3/4" = 1'-0"

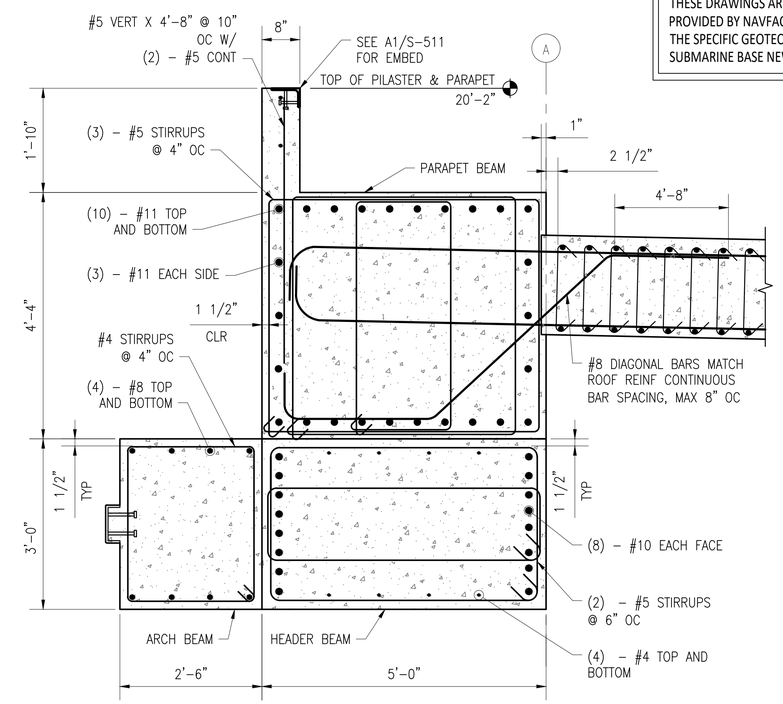

B3 HEADER BEAM INTERIOR SECTION
SCALE: 3/4" = 1'-0"

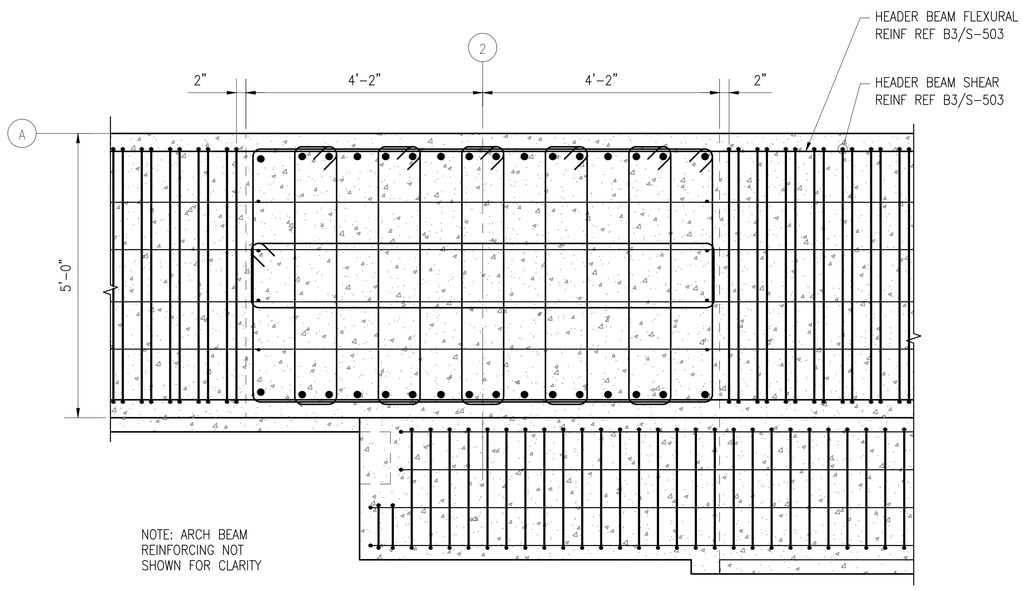

A1 PILASTER INTERIOR THRU HEADER BEAM
SCALE: 3/4" = 1'-0"

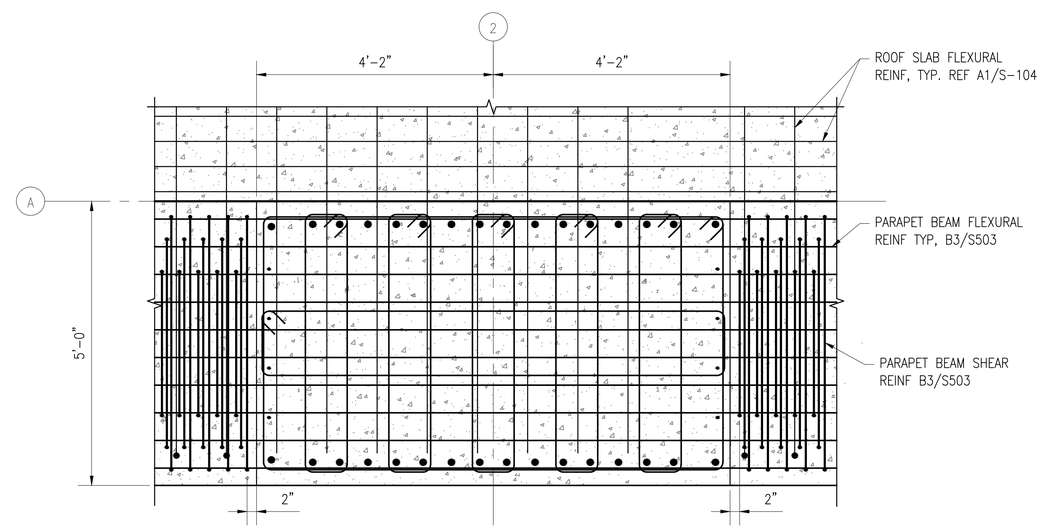

A3 PILASTER INTERIOR THRU PARAPET BEAM / ROOF SLAB
SCALE: 3/4" = 1'-0"

SYM	DESCRIPTION	DATE	APPR

NAVFAC

SEAL

Jacobs
1100 NORTH GLEBE ROAD
SUITE 500
ARLINGTON, VIRGINIA 22201
571.218.1000
FAX: 571.218.1600

A/E INFO

APPROVED
FOR COMMANDER NAVFAC 8/14/2025

ACTIVITY
APPROVED BY LCDR ELIZABETH
OLOKODE NAVFAC NLON FEAD
DIRECTOR NEW LONDON, GROTON, CT

SATISFACTORY TO DATE 05/27/2025

DES	FJ	DRW	MR	CHK	DW

PM/DM	SMS/CWJ
BRANCH MANAGER	NEK
CHIEF ENG/ARCH	JWJ
FIRE PROTECTION	HPN

DEPARTMENT OF THE NAVY
NAVAL FACILITIES ENGINEERING SYSTEMS COMMAND
MID-ATLANTIC
NAVAL FACILITIES ENGINEERING SYSTEMS COMMAND - MID-ATLANTIC
NAVAL STATION - NORFOLK, VA
NAVAL SUBMARINE BASE NEW LONDON
GROTON, CONNECTICUT
P-1102 WEAPONS MAGAZINE & ORDNANCE OPERATIONS FACILITY
TYPE G MAGAZINE
BOUNDARY ELEMENT REINF DETAILS

SCALE: 3/4" = 1'-0"
EPROJECT NO.: 1667770
CONSTR. CONTR. NO.
NAVFAC DRAWING NO.
12894188
SHEET 36 OF 91
S-503

FILE NAME: C:\pw_workdir\dms003\jb2mhill_09050107\d1710459\S-503.dwg LAYOUT NAME: S-503 - BOUNDARY ELEMENT REINF DETAILS PLOTTED: Friday, June 13, 2025 - 9:50am USER: 09050107

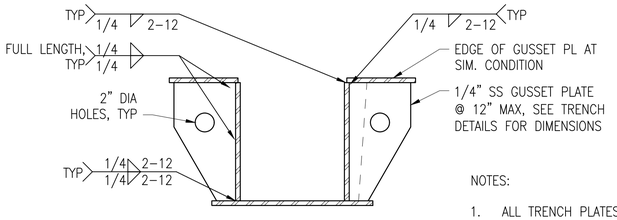

NOTES:

1. ALL TRENCH PLATES ARE 1/2" THK SS, UNO.
2. SEE TRENCH DETAILS FOR OVERALL SIZE OF TRENCH PLATE ASSEMBLY.
3. TRENCH PL MFR TO PROVIDE OVERSIZE BOLT HOLES ON TRENCH BOTTOM PL FOR ACCESS OF SOLE PL ANCHOR BOLTS TO CONC.

D1 TRENCH ASSEMBLY AND WELDMENT

SCALE: 1 1/2" = 1'-0"

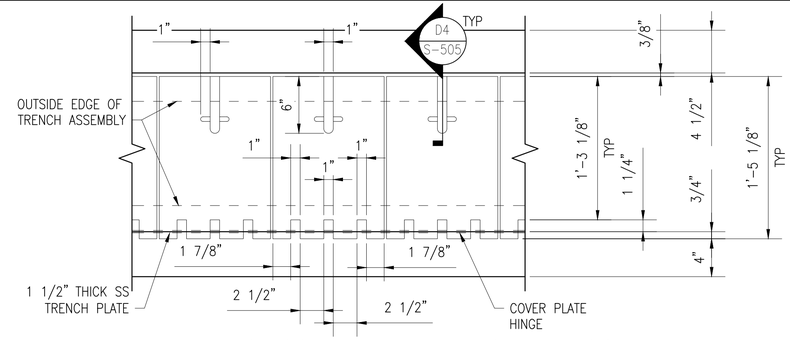

D3 TRENCH COVER PLATE AT MAGAZINE DOOR

SCALE: 1 1/2" = 1'-0"

THESE DRAWINGS ARE AN EXACT REPLICA OF THE STANDARD MAGAZINE TYPE "G" PROVIDED BY NAVFAC. THE DESIGN WILL BE SITE ADAPTED AND MODIFIED TO MEET THE SPECIFIC GEOTECHNICAL AND LOADING CONDITIONS SPECIFIC TO NAVAL SUBMARINE BASE NEW LONDON, GROTON, CONNECTICUT.

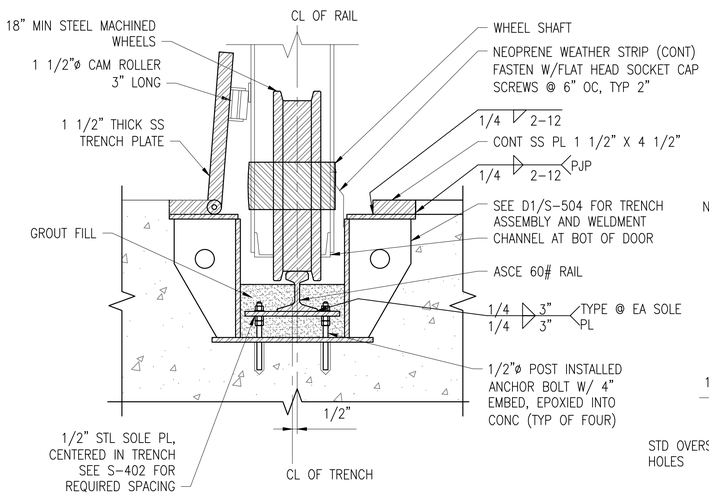

NOTES:

1. TENSION ANCHOR BOLTS TO SOLE PLATE PRIOR TO POURING GROUT.

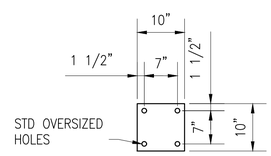

SOLE PLATE PLAN

B1 TRENCH AT MAGAZINE OPEN COVER

SCALE: 1 1/2" = 1'-0"

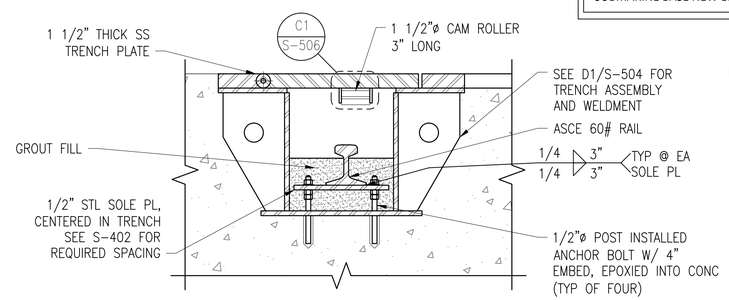

NOTES:

1. TENSION ANCHOR BOLTS TO SOLE PLATE PRIOR TO POURING GROUT.

B3 TRENCH AT MAGAZINE WITH CLOSED COVER

SCALE: 1 1/2" = 1'-0"

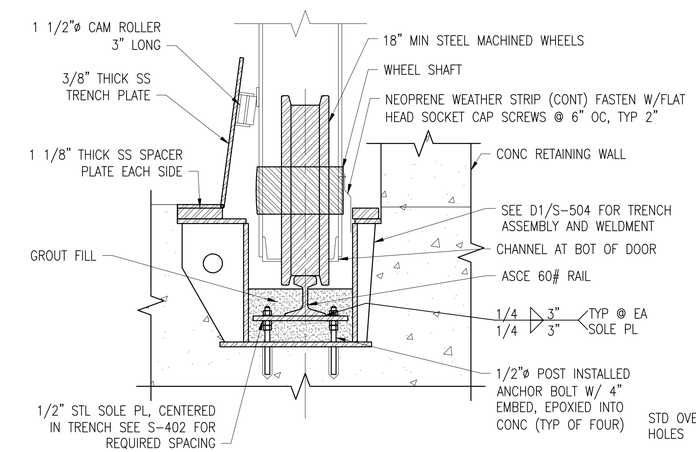

NOTES:

1. TENSION ANCHOR BOLTS TO SOLE PLATE PRIOR TO POURING GROUT.
2. CONTRACTOR'S OPTION TO INSTALL THE THICKER TRENCH PLATE SHOWN ON B1/S-704 AT ALL THE THINNER TRENCH PLATE LOCATIONS (A1/S-704). THE TRENCH PLATE DESIGN IS THE RESPONSIBILITY OF THE CONTRACTOR.

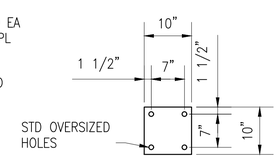

SOLE PLATE PLAN

A1 TRENCH AT RETAINING WALL/PILASTER

SCALE: 1 1/2" = 1'-0"

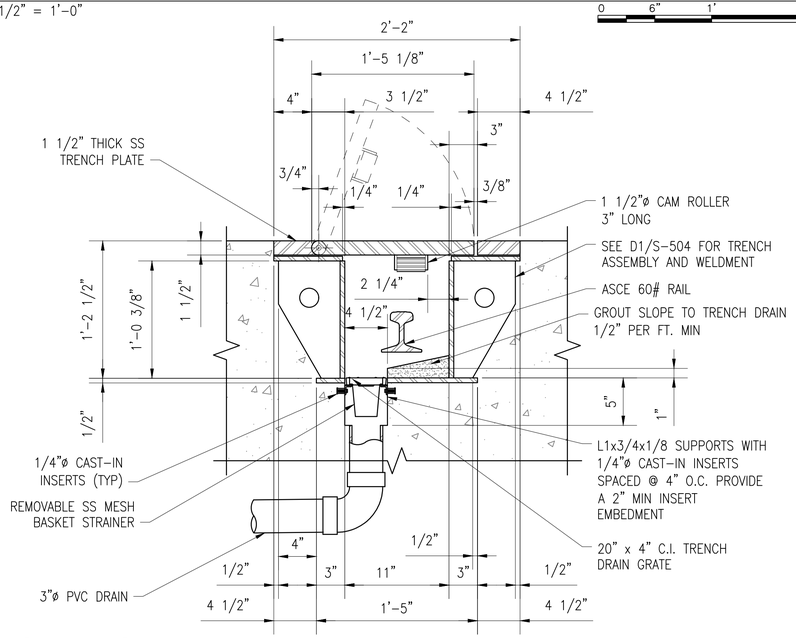

A3 TRENCH AT MAGAZINE AT DRAIN

SCALE: 1 1/2" = 1'-0"

Jacobs
1100 NORTH GLEBE ROAD
SUITE 500
ARLINGTON, VIRGINIA 22201
571.218.1000
FAX: 571.218.1600

APPROVED	
FOR COMMANDER NAVFAC	8/14/2025
ACTIVITY	APPROVED BY LCDR ELIZABETH OLOKODE NAVFAC NLON FEAD DIRECTOR NEW LONDON, GROTON, CT
SATISFACTORY TO DATE	05/27/2025
DES FJ DRW MR CHK DW	
PM/DM	SMS/CWJ
BRANCH MANAGER	NEK
CHIEF ENG/ARCH	JVU
FIRE PROTECTION	HPN

DEPARTMENT OF THE NAVY
NAVAL FACILITIES ENGINEERING SYSTEMS COMMAND
MID-ATLANTIC
NAVAL FACILITIES ENGINEERING SYSTEMS COMMAND - MID-ATLANTIC
NAVAL STATION - NORFOLK, VA
NAVAL SUBMARINE BASE NEW LONDON
GROTON, CONNECTICUT
P-1102 WEAPONS MAGAZINE & ORDNANCE OPERATIONS FACILITY
TYPE G MAGAZINE
DOOR TRENCH AND COVER DETAILS

SCALE:	1 1/2" = 1'-0"
EPROJECT NO.:	1667770
CONSTR. CONTR. NO.	
NAVFAC DRAWING NO.	12894189
SHEET	37 OF 91

S-504

STM	DESCRIPTION	DATE	APPR

SEAL

A/E INFO

FILE NAME: C:\pw_workdir\den0033\pb2mhill_09050107\d1710459\S-504.dwg LAYOUT NAME: S-504 - DOOR TRENCH AND COVER DETAILS PLOTTED: Friday, June 13, 2025 - 9:50am USER: 09050107

THESE DRAWINGS ARE AN EXACT REPLICA OF THE STANDARD MAGAZINE TYPE "G" PROVIDED BY NAVFAC. THE DESIGN WILL BE SITE ADAPTED AND MODIFIED TO MEET THE SPECIFIC GEOTECHNICAL AND LOADING CONDITIONS SPECIFIC TO NAVAL SUBMARINE BASE NEW LONDON, GROTON, CONNECTICUT.

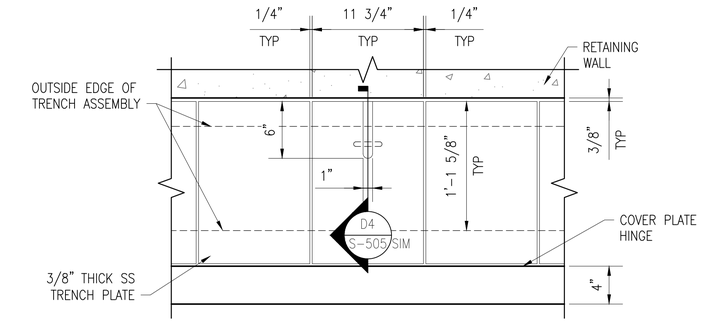

D1 TRENCH COVER PLATE AT RETAINING WALL/PILASTER

SCALE: 1 1/2" = 1'-0"

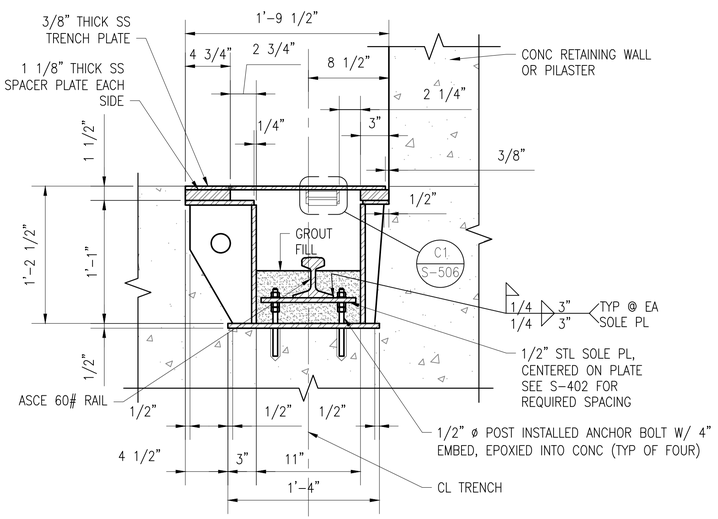

NOTES:

1. TENSION ANCHOR BOLTS TO SOLE PLATE PRIOR TO POURING GROUT.
2. SEE D1/S-504 FOR TRENCH ASSEMBLY AND WELDMENT.
3. CONTRACTOR'S OPTION TO INSTALL THE THICKER TRENCH PLATE SHOWN ON B1/S-704 AT ALL THE THINNER TRENCH PLATE LOCATIONS (A1/S-704). THE TRENCH PLATE DESIGN IS THE RESPONSIBILITY OF THE CONTRACTOR.

B1 TRENCH AT RETAINING WALL/PILASTER WITH CLOSED COVER

SCALE: 1 1/2" = 1'-0"

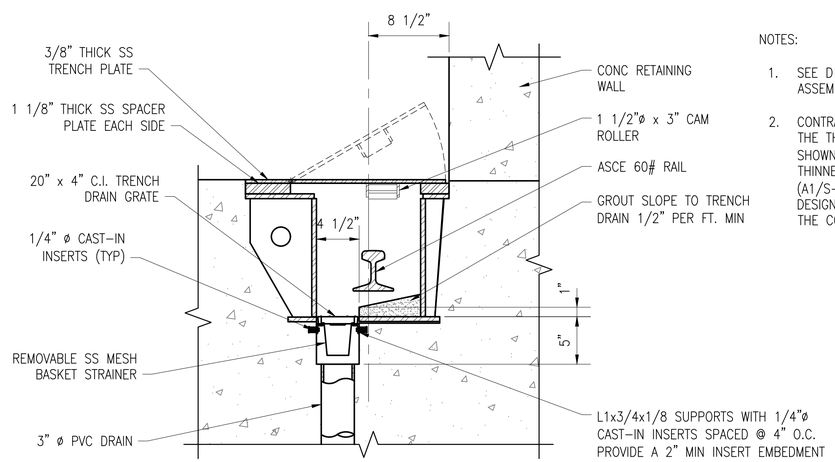

NOTES:

1. SEE D1/S-504 FOR TRENCH ASSEMBLY AND WELDMENT.
2. CONTRACTOR'S OPTION TO INSTALL THE THICKER TRENCH PLATE SHOWN ON B1/S-704 AT ALL THE THINNER TRENCH PLATE LOCATIONS (A1/S-704). THE TRENCH PLATE DESIGN IS THE RESPONSIBILITY OF THE CONTRACTOR.

A1 TRENCH AT RETAINING WALL/PILASTER AT DRAIN

SCALE: 1 1/2" = 1'-0"

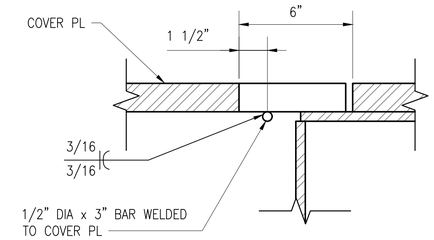

D4 TRENCH PLATE MANUAL LIFT

SCALE: 3" = 1'-0"

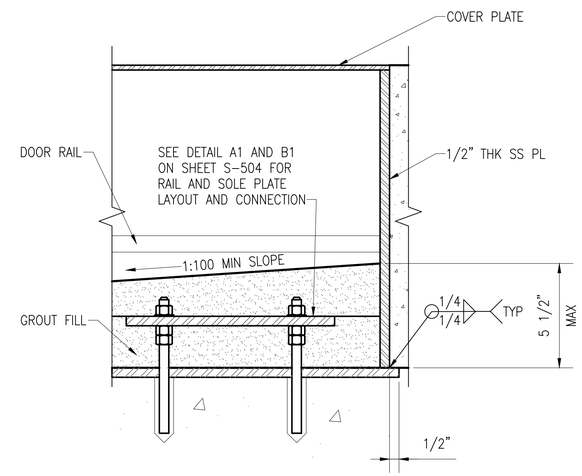

B4 DETAIL - TRENCH END PLATE

SCALE: 3" = 1'-0"

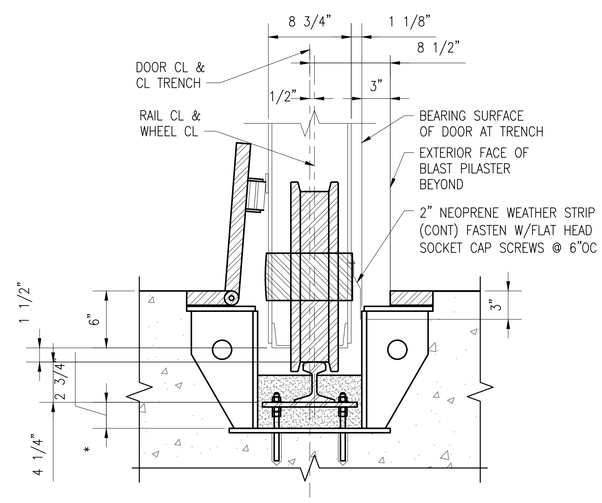

A4 DOOR ALIGNMENT AT TRENCH

SCALE: 1 1/2" = 1'-0"

STM	DESCRIPTION	DATE	APPR

NAVFAC

SEAL

Jacobs
1100 NORTH GLEBE ROAD
SUITE 500
ARLINGTON, VIRGINIA 22201
571.218.1000
FAX: 571.218.1600

A/E INFO

APPROVED

FOR COMMANDER NAVFAC 8/14/2025

ACTIVITY
APPROVED BY LCDR ELIZABETH OLOKODE NAVFAC NLON FEAD DIRECTOR NEW LONDON, GROTON, CT

SATISFACTORY TO DATE 05/27/2025

DES	FJ	DRW	MR	CHK	DW

PM/DM	SMS/CWJ
BRANCH MANAGER	NEK
CHIEF ENG/ARCH	JWJ
FIRE PROTECTION	HPN

DEPARTMENT OF THE NAVY
NAVAL FACILITIES ENGINEERING SYSTEMS COMMAND
MIDATLANTIC
NAVAL FACILITIES ENGINEERING SYSTEMS COMMAND - MID-ATLANTIC
NAVAL STATION - NORFOLK, VA
NAVAL SUBMARINE BASE NEW LONDON
GROTON, CONNECTICUT
P-1102 WEAPONS MAGAZINE & ORDNANCE OPERATIONS FACILITY
TYPE G MAGAZINE

DOOR TRENCH AND COVER DETAILS

SCALE: AS NOTED
EFPROJECT NO.: 1667770
CONSTR. CONTR. NO.
NAVFAC DRAWING NO. 12894190
SHEET 38 OF 91

S-505

FILE NAME: C:\pw_work\dr\dem0031\ch2mhill_09050107\d1710459\S-505.dwg LAYOUT NAME: S-505 - DOOR TRENCH AND COVER DETAILS PLOTTED: Friday, June 13, 2025 - 9:50am USER: 09050107

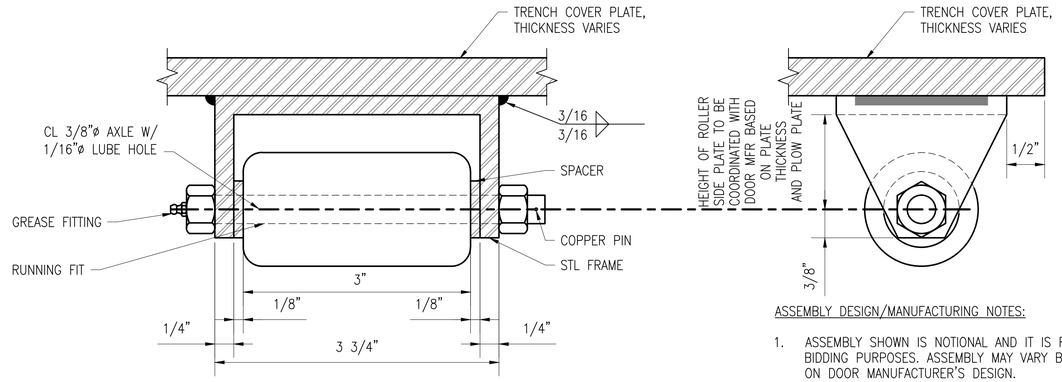

ASSEMBLY DESIGN/MANUFACTURING NOTES:

1. ASSEMBLY SHOWN IS NOTIONAL AND IT IS FOR BIDDING PURPOSES. ASSEMBLY MAY VARY BASED ON DOOR MANUFACTURER'S DESIGN.

C1 TYPICAL TRENCH COVER ROLLER

SCALE: 12" = 1'-0"

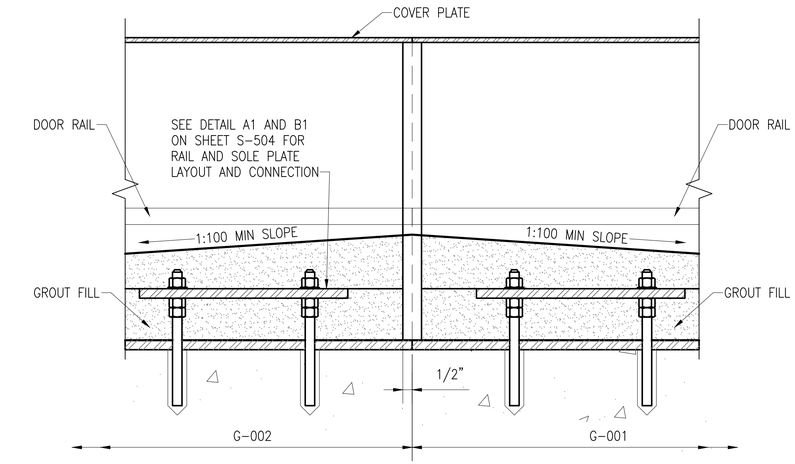

C4 DETAIL – TRENCH END PLATE

SCALE: 3" = 1'-0"

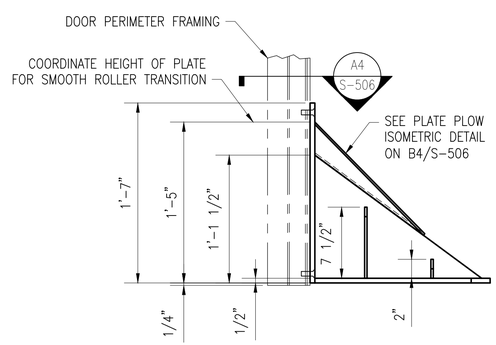

B1 DETAIL - PLATE PLOW SIDE ELEVATION

SCALE: 1 1/2" = 1'-0"

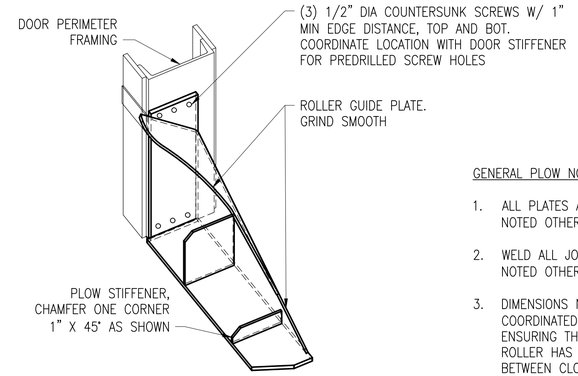

GENERAL PLOW NOTES:

1. ALL PLATES ARE 1/4" THICK PLATE UNLESS NOTED OTHERWISE IN DETAILS.
2. WELD ALL JOINTS 3/16" FILLET UNLESS NOTED OTHERWISE.
3. DIMENSIONS NOTED WITH AN (*) MUST BE COORDINATED WITH PLOW MANUFACTURER ENSURING THAT DOOR TRENCH COVER ROLLER HAS A SMOOTH TRANSITION BETWEEN CLOSED AND OPEN POSITIONS.
4. PLOW TO BE INSTALLED ON BOTH ENDS OF EACH DOOR

B4 PLATE PLOW ISOMETRIC VIEW

SCALE: 1 1/2" = 1'-0"

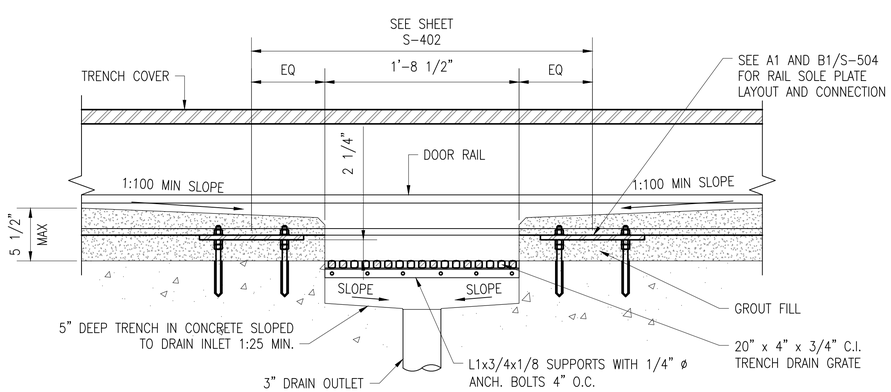

A1 TRENCH DRAIN BLOCKOUT

SCALE: 1 1/2" = 1'-0"

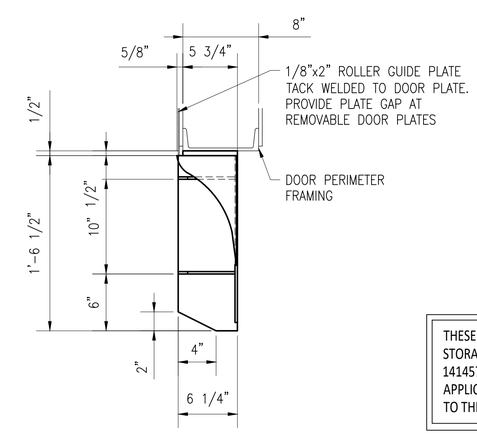

A4 DETAIL - PLATE PLOW PLAN

SCALE: 1 1/2" = 1'-0"

THESE DRAWINGS HAVE BEEN ADAPTED FROM APPROVED NAVFAC MUNITIONS STORAGE CONSTRUCTION DOCUMENTS, NAVFAC DRAWING NUMBERS 14145656 TO 14145704, DATED 24 SEPT 2024. JACOBS DOR RESPONSIBILITY AND SEAL APPLICABILITY IS LIMITED TO THE SITE ADAPTATIONS AND MODIFICATIONS MADE TO THIS DRAWING.

SYM	DESCRIPTION	DATE	APPR

NAVFAC

LARA ARICO PRESLEY REGISTERED ENGINEER AGRICULTURE COMMERCE No. 106304 STATE OF TENNESSEE 06/27/2025 SEAL

Jacobs
1100 NORTH GLEBE ROAD
SUITE 500
ARLINGTON, VIRGINIA 22201
571.218.1000
FAX: 571.218.1600

A/E INFO

APPROVED
FOR COMMANDER NAVFAC 8/14/2025

ACTIVITY
APPROVED BY LCDR ELIZABETH OLOKODE NAVFAC NLON FEAD DIRECTOR NEW LONDON, GROTON, CT

SATISFACTORY TO DATE 05/27/2025

DES	FJ	DRW	MR	CHK	DW
PM/DM	SMS/CWJ				
BRANCH MANAGER	NEK				
CHIEF ENG/ARCH	JVJ				
FIRE PROTECTION	HPN				

DEPARTMENT OF THE NAVY
NAVAL FACILITIES ENGINEERING SYSTEMS COMMAND
MID-ATLANTIC

NAVAL FACILITIES ENGINEERING SYSTEMS COMMAND - MID-ATLANTIC
NAVAL STATION - NORFOLK, VA

NAVAL SUBMARINE BASE NEW LONDON
GROTON, CONNECTICUT

P-1102 WEAPONS MAGAZINE & ORDNANCE OPERATIONS FACILITY
TYPE G MAGAZINE

DOOR STOP, PLOW AND TRENCH COVER ROLLER DETAILS

SCALE: AS NOTED
EPROJECT NO.: 1667770
CONSTR. CONTR. NO.
NAVFAC DRAWING NO. 12894191
SHEET 39 OF 91

S-506S

FILE NAME: C:\pw_workdir\den003\ch2mhill_09050107\d1710459\S-506S - DOOR STOP PLOW AND TRENCH COVER ROLLER DETAILS LAYOUT NAME: S-506S.dwg PLOTTED: Friday, June 13, 2025 - 9:51am USER: 09050107

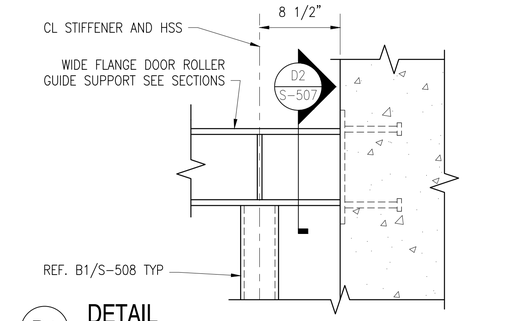

D1 DETAIL
SCALE: 1 1/2" = 1'-0"

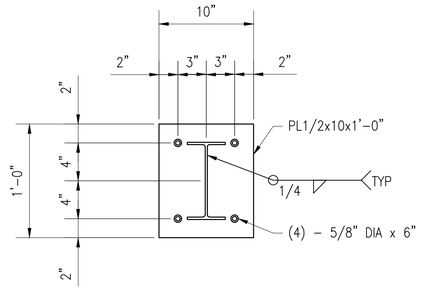

D2 SECTION
SCALE: 1 1/2" = 1'-0"

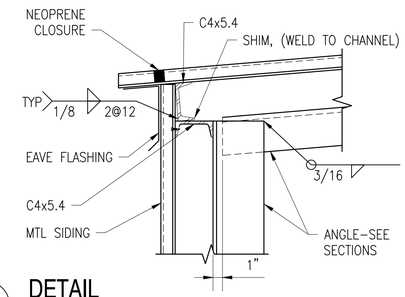

D3 DETAIL
SCALE: 1 1/2" = 1'-0"

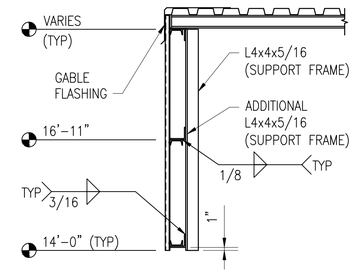

D4 GABLE SECTION
SCALE: 1/2" = 1'-0"

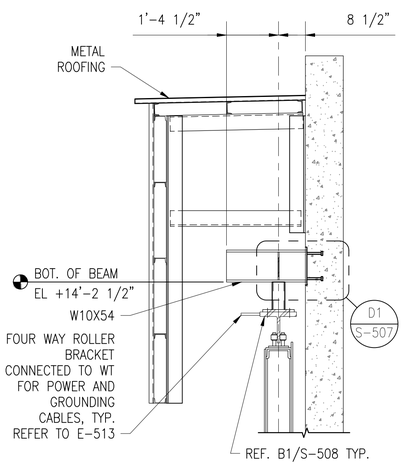

B1 DOOR RAIL SUPPORT
SCALE: 1/2" = 1'-0"

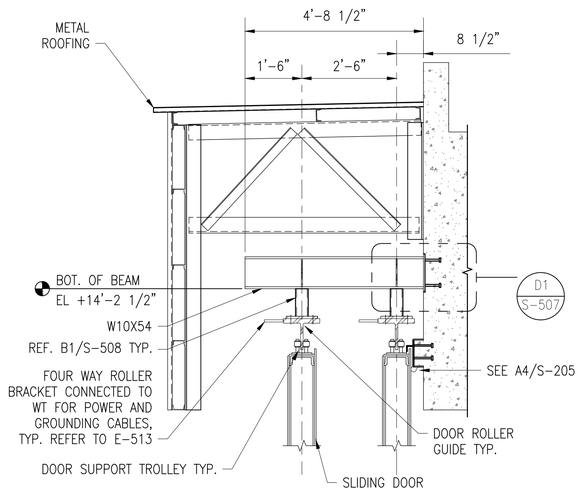

B2 DOOR RAIL SUPPORT
SCALE: 1/2" = 1'-0"

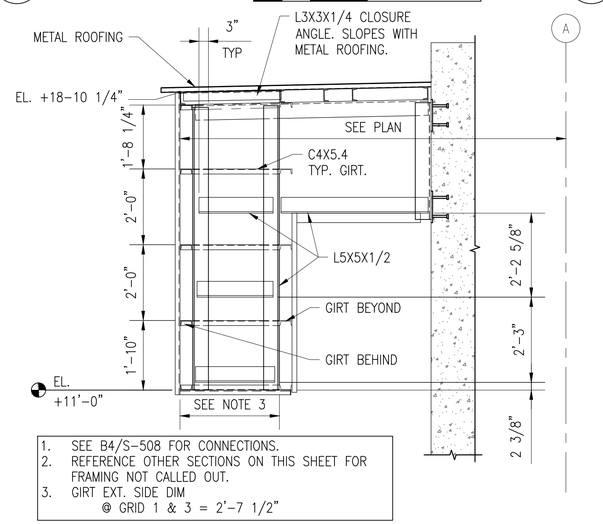

1. SEE B4/S-508 FOR CONNECTIONS.
2. REFERENCE OTHER SECTIONS ON THIS SHEET FOR FRAMING NOT CALLED OUT.
3. GIRT EXT. SIDE DIM @ GRID 1 & 3 = 2'-7 1/2"

B3 CANOPY WIDTH TRANSITION
SCALE: 1/2" = 1'-0"

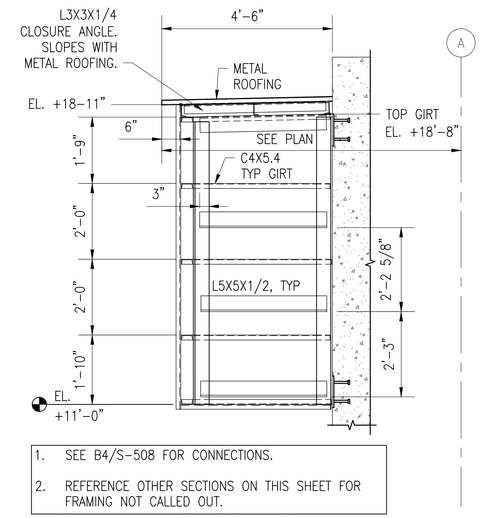

1. SEE B4/S-508 FOR CONNECTIONS.
2. REFERENCE OTHER SECTIONS ON THIS SHEET FOR FRAMING NOT CALLED OUT.

B4 CANOPY END CLOSURE
SCALE: 1/2" = 1'-0"

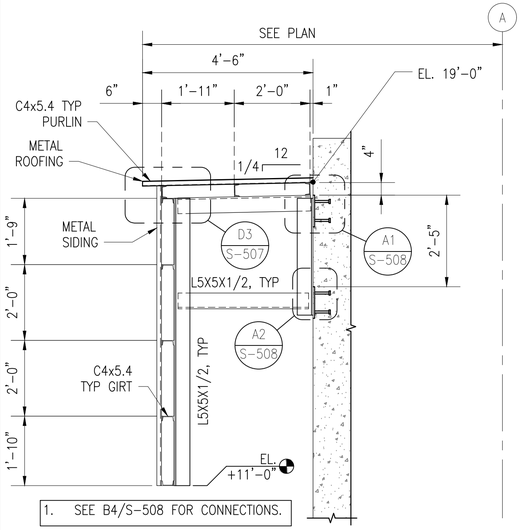

1. SEE B4/S-508 FOR CONNECTIONS.

A1 CANOPY SECTION
SCALE: 1/2" = 1'-0"

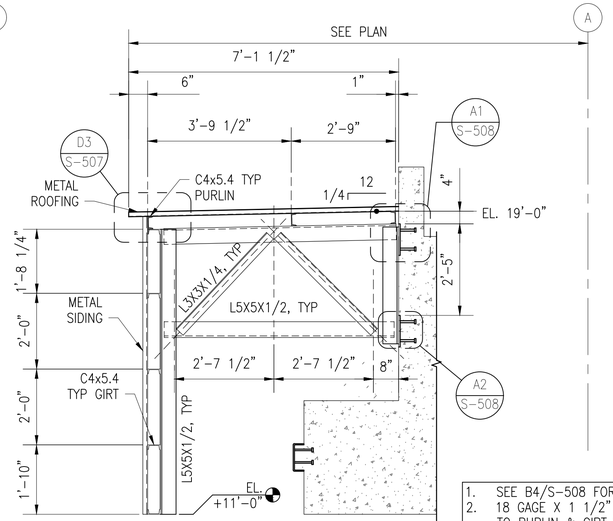

1. SEE B4/S-508 FOR CONNECTIONS.
2. 18 GAGE X 1 1/2" DEEP FACTORY FINISHED HI-RIB METAL ROOFING & SIDING. FASTEN TO PURLIN & GIRT WITH #14 STAINLESS STEEL SCREWS & WASHERS AT EA. VALLEY (MINIMUM 5 PER PANEL) USE 1/4" BUTYL TAPE TO SEAL LAPS. TYP. FOR THE CANOPY.

A2 CANOPY SECTION
SCALE: 1/2" = 1'-0"

THESE DRAWINGS ARE AN EXACT REPLICA OF THE STANDARD MAGAZINE TYPE "G" PROVIDED BY NAVFAC. THE DESIGN WILL BE SITE ADAPTED AND MODIFIED TO MEET THE SPECIFIC GEOTECHNICAL AND LOADING CONDITIONS SPECIFIC TO NAVAL SUBMARINE BASE NEW LONDON, GROTON, CONNECTICUT.

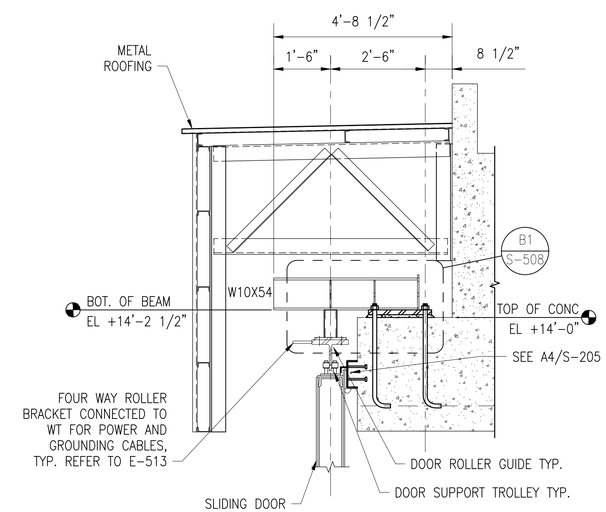

A4 DOOR RAIL SUPPORT
SCALE: 1/2" = 1'-0"

SYM	DESCRIPTION	DATE	APPR.

NAVFAC

Jacobs
1100 NORTH GLEBE ROAD
SUITE 500
ARLINGTON, VIRGINIA 22201
571.218.1000
FAX: 571.218.1600

A/E INFO

APPROVED
FOR COMMANDER NAVFAC 8/14/2025

ACTIVITY
APPROVED BY LCDR ELIZABETH OLOKODE NAVFAC NLON FEAD DIRECTOR NEW LONDON, GROTON, CT

SATISFACTORY TO DATE 05/27/2025

DES	FJ	DRW	MR	CHK	DW

PM/DM	SMS/CWJ
BRANCH MANAGER	NEK
CHIEF ENG/ARCH	JWJ
FIRE PROTECTION	HPN

DEPARTMENT OF THE NAVY
NAVAL FACILITIES ENGINEERING SYSTEMS COMMAND
MID-ATLANTIC
NAVAL FACILITIES ENGINEERING SYSTEMS COMMAND - MID-ATLANTIC
NAVAL STATION - NORFOLK, VA
NAVAL SUBMARINE BASE NEW LONDON
GROTON, CONNECTICUT
P-1102 WEAPONS MAGAZINE & ORDNANCE OPERATIONS FACILITY
TYPE G MAGAZINE

CANOPY AND RAIL SUPPORT DETAILS

SCALE: AS NOTED
EPROJECT NO.: 1667770
CONSTR. CONTR. NO.
NAVFAC DRAWING NO. 12894192
SHEET 40 OF 91
S-507

FILE NAME: C:\pw_workdir\den003\ch2mhill_09050107\d1710459\S-507.dwg LAYOUT NAME: S-507 - CANOPY AND RAIL SUPPORT DETAILS PLOTTED: Friday, June 13, 2025 - 9:51am USER: 09050107

THESE DRAWINGS ARE AN EXACT REPLICA OF THE STANDARD MAGAZINE TYPE "G" PROVIDED BY NAVFAC. THE DESIGN WILL BE SITE ADAPTED AND MODIFIED TO MEET THE SPECIFIC GEOTECHNICAL AND LOADING CONDITIONS SPECIFIC TO NAVAL SUBMARINE BASE NEW LONDON, GROTON, CONNECTICUT.

*DOOR ROLLER GUIDE ASSEMBLY MUST HAVE A 9 KIP MINIMUM LATERAL LOAD CAPACITY. CONNECT ROLLER GUIDE ASSEMBLY TO PERIMETER DOOR CHANNEL PER MANUFACTURER'S RECOMMENDATIONS.

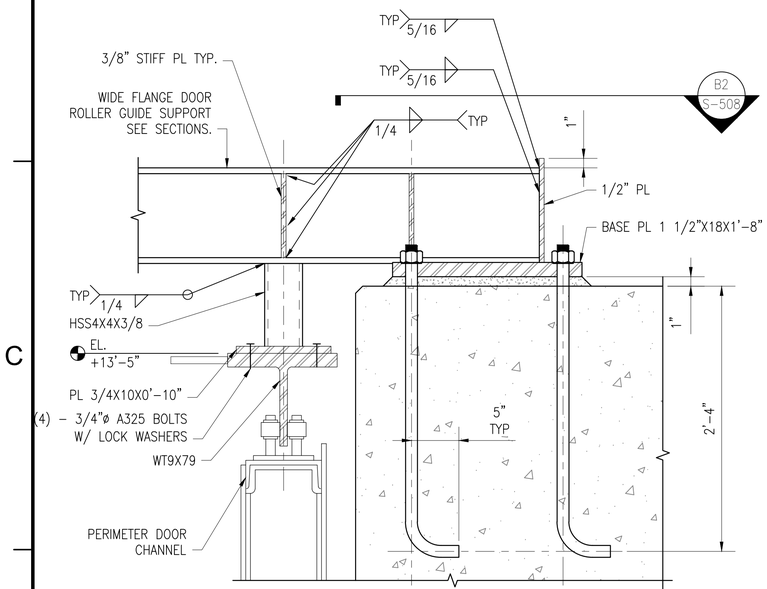

B1 DOOR RAIL SUPPORT
SCALE: 1 1/2" = 1'-0"

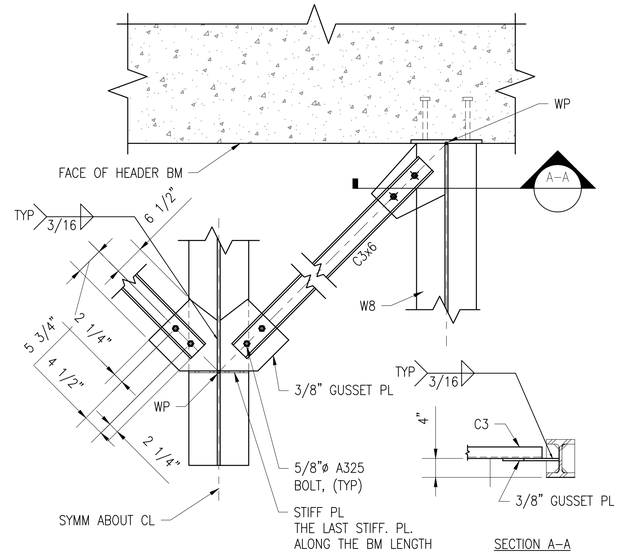

C2 DETAIL
SCALE: 3/4" = 1'-0"

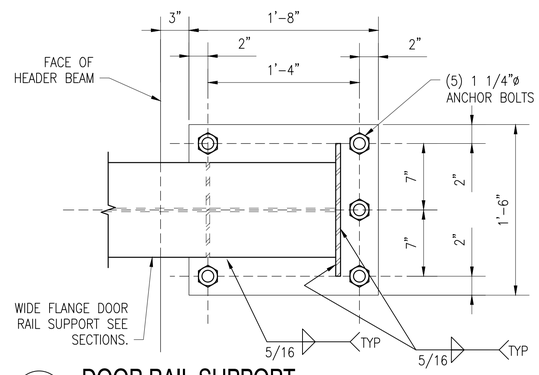

B2 DOOR RAIL SUPPORT
SCALE: 1 1/2" = 1'-0"

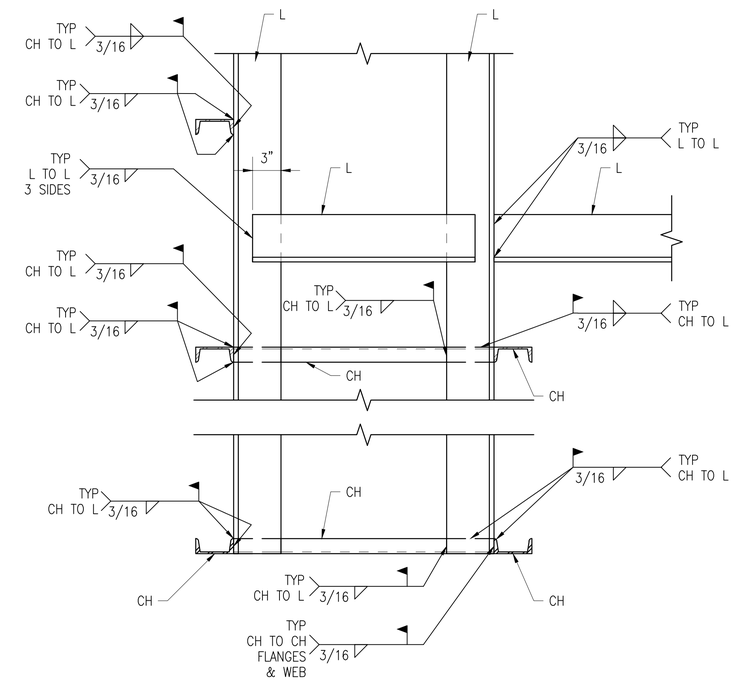

B4 CANOPY TYPICAL CONNECTION DIAGRAM
SCALE: 1 1/2" = 1'-0"

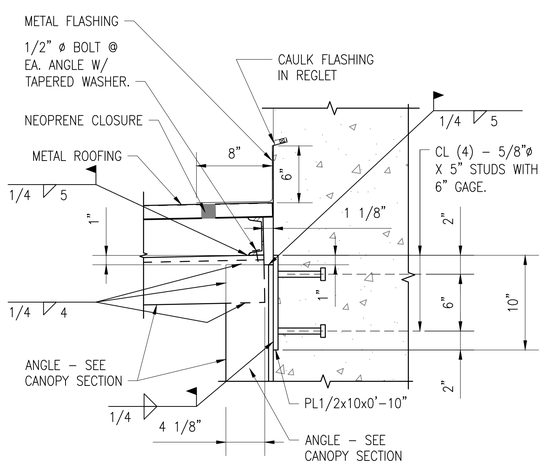

A1 CANOPY CONNECTION
SCALE: 1 1/2" = 1'-0"

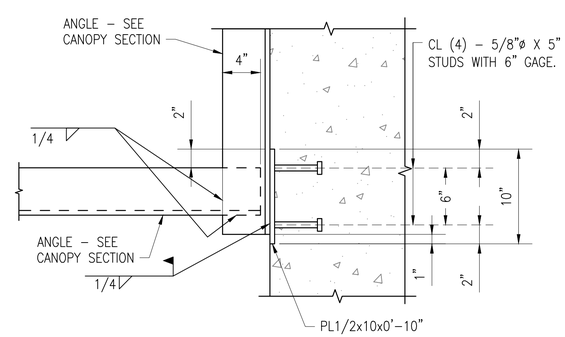

A2 CANOPY CONNECTION
SCALE: 1 1/2" = 1'-0"

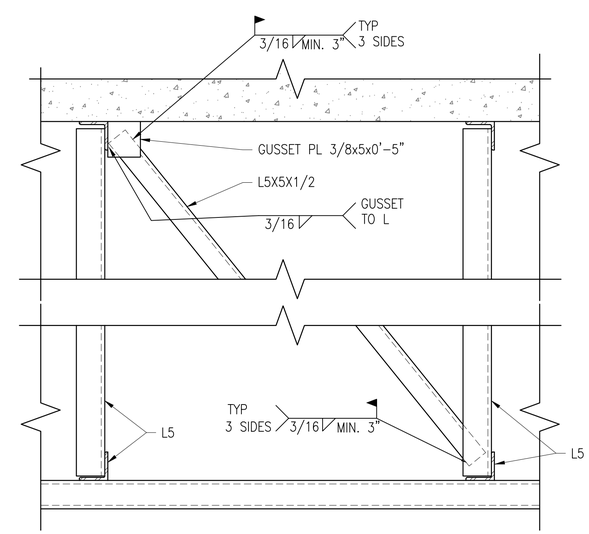

A4 DETAIL
SCALE: 3/4" = 1'-0"

SYM	DESCRIPTION	DATE	APPR.

Jacobs
1100 NORTH GLEBE ROAD
SUITE 500
ARLINGTON, VIRGINIA 22201
571.218.1000
FAX: 571.218.1600

A/E INFO

APPROVED
FOR COMMANDER NAVFAC 8/14/2025
ACTIVITY
APPROVED BY LCDR ELIZABETH OLOKODE NAVFAC NLON FEAD DIRECTOR NEW LONDON, GROTON, CT
SATISFACTORY TO DATE 05/27/2025

DES	FJ	DRW	MR	CHK	DW
PM/DM	SMS/CWJ				
BRANCH MANAGER	NEK				
CHIEF ENG/ARCH	JWJ				
FIRE PROTECTION	HPN				

DEPARTMENT OF THE NAVY
NAVAL FACILITIES ENGINEERING SYSTEMS COMMAND
MID-ATLANTIC
NAVAL FACILITIES ENGINEERING SYSTEMS COMMAND - MID-ATLANTIC
NAVAL STATION - NORFOLK, VA
NAVAL SUBMARINE BASE NEW LONDON
GROTON, CONNECTICUT
P-1102 WEAPONS MAGAZINE & ORDNANCE OPERATIONS FACILITY
TYPE G MAGAZINE

CANOPY AND RAIL SUPPORT DETAILS

SCALE: AS NOTED
EPROJECT NO.: 1667770
CONSTR. CONTR. NO.
NAVFAC DRAWING NO. 12894193
SHEET 41 OF 91
S-508

FILE NAME: C:\pw_workdir\dms0033\ch2mhill_00950107\d1710459\S-508.dwg LAYOUT NAME: S-508 - CANOPY AND RAIL SUPPORT DETAILS PLOTTED: Friday, June 13, 2025 - 9:51pm USER: 00950107

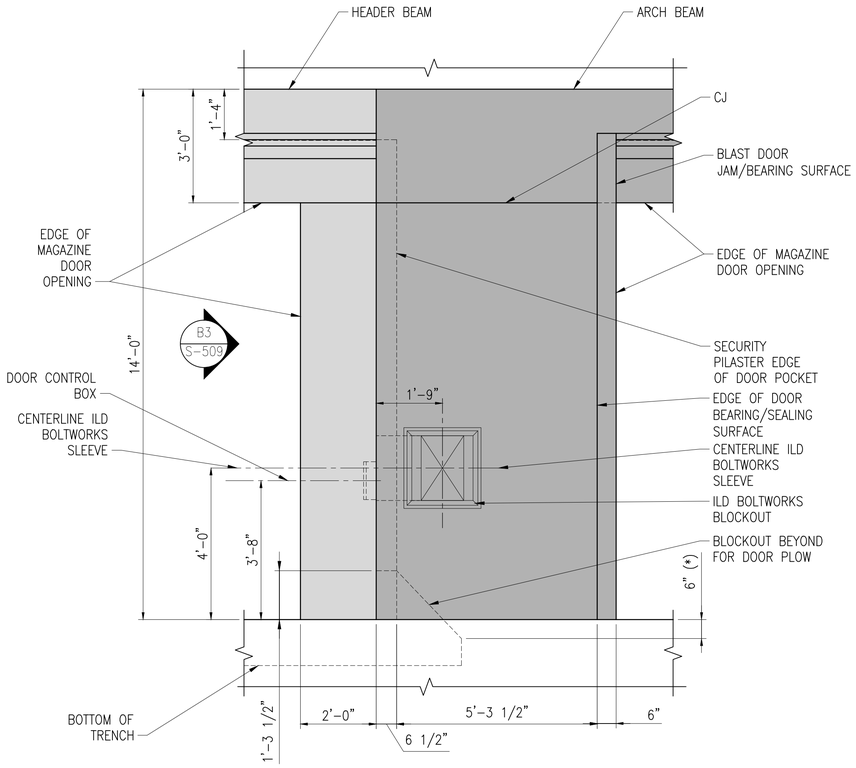

NOTES:
1. DIMENSIONS NOTED WITH AN (*) MUST BE COORDINATED BY THE DOOR MANUFACTURER ENSURING THE DOOR SYSTEM PERFORMS AS INTENDED.
2. SEE SHEET S-204 FOR LAYOUT OF ARCH/SECURITY PILASTER AND ARCH BEAM.
3. SEE SHEETS S-502 AND S-503 FOR REINFORCEMENT SIZE AND SPACING.

B1 SECURITY PILASTER ELEVATION FROM FRONT OF MAGAZINE @ GRIDLINE 2

SCALE: 1/2" = 1'-0"

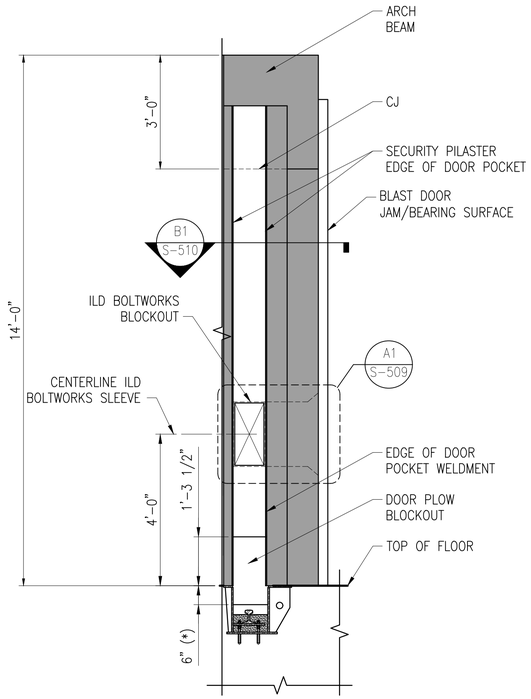

NOTES:
1. DIMENSIONS NOTED WITH AN (*) MUST BE COORDINATED BY THE DOOR MANUFACTURER ENSURING THE DOOR SYSTEM PERFORMS AS INTENDED.
2. SEE SHEET S-204 FOR LAYOUT OF ARCH/SECURITY PILASTER AND ARCH BEAM.
3. SEE SHEETS S-502 AND S-503 FOR REINFORCEMENT SIZE AND SPACING.

B3 SECURITY PILASTER ELEVATION

SCALE: 1/2" = 1'-0"

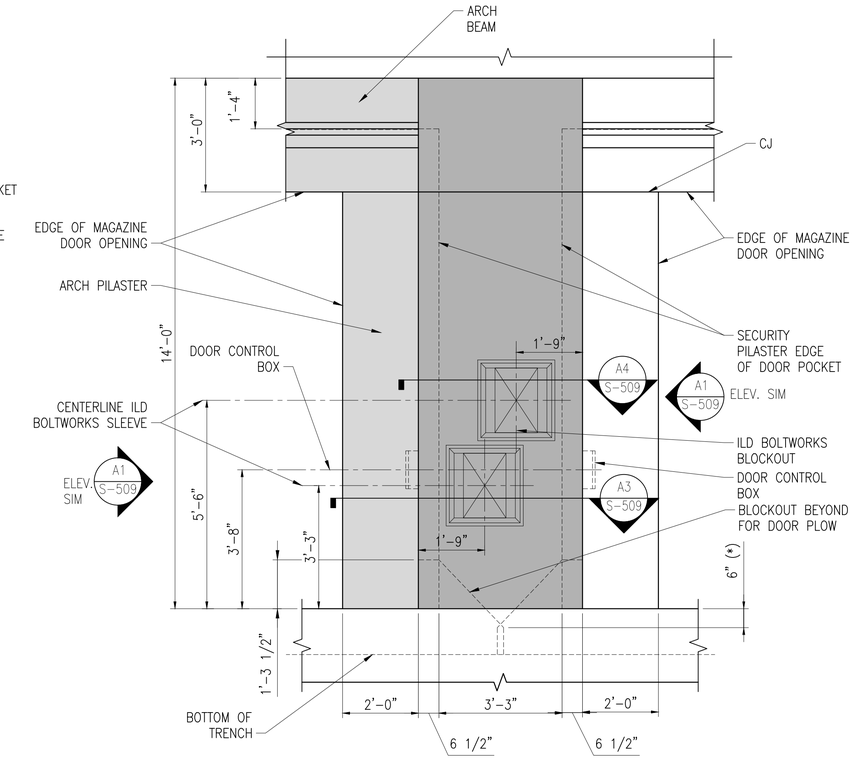

NOTES:
1. DIMENSIONS NOTED WITH AN (*) MUST BE COORDINATED BY THE DOOR MANUFACTURER ENSURING THE DOOR SYSTEM PERFORMS AS INTENDED.
2. SEE SHEET S-204 FOR LAYOUT OF ARCH/SECURITY PILASTER AND ARCH BEAM.
3. SEE SHEETS S-502 AND S-503 FOR REINFORCEMENT SIZE AND SPACING.

B4 SECURITY PILASTER ELEVATION FROM FRONT OF MAGAZINE @ GRID 3

SCALE: 1/2" = 1'-0"

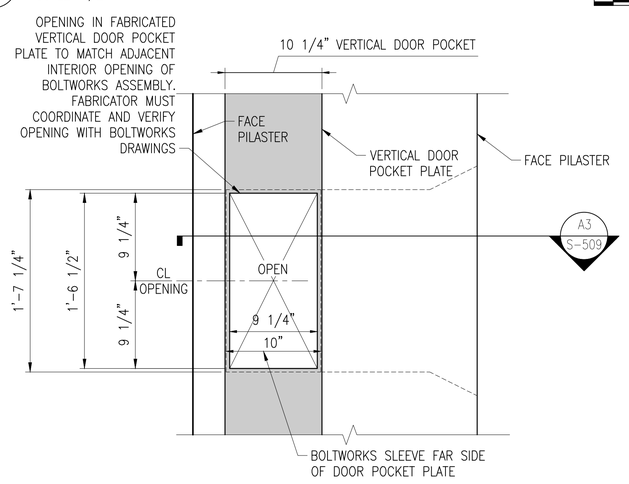

A1 ILD BOLTWORKS BLOCKOUT IN VERTICAL DOOR POCKET PLATE

SCALE: 1 1/2" = 1'-0"

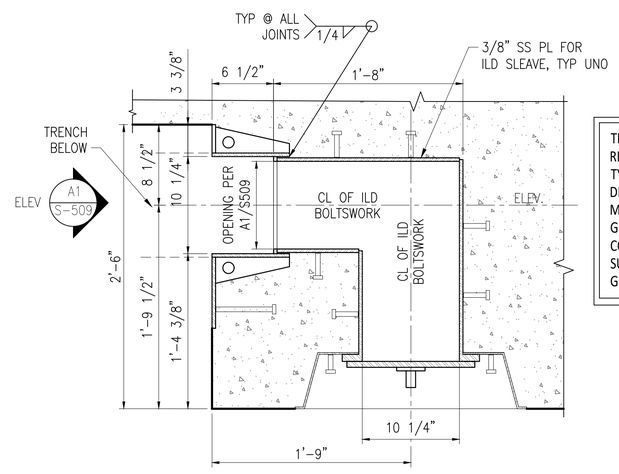

A3 SECURITY PILASTER PLAN

SCALE: 1 1/2" = 1'-0"

THESE DRAWINGS ARE AN EXACT REPLICA OF THE STANDARD MAGAZINE TYPE "G" PROVIDED BY NAVFAC. THE DESIGN WILL BE SITE ADAPTED AND MODIFIED TO MEET THE SPECIFIC GEOTECHNICAL AND LOADING CONDITIONS SPECIFIC TO NAVAL SUBMARINE BASE NEW LONDON, GROTON, CONNECTICUT.

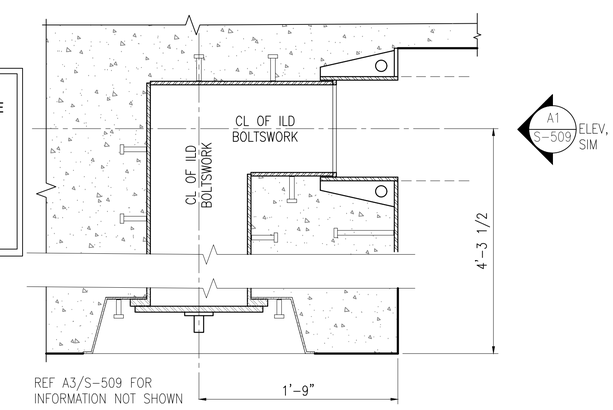

A4 SECURITY PILASTER PLAN

SCALE: 1 1/2" = 1'-0"

STM	DESCRIPTION	DATE	APPR.

NAVFAC

SEAL

Jacobs
1100 NORTH GLEBE ROAD
SUITE 500
ARLINGTON, VIRGINIA 22201
571.218.1000
FAX: 571.218.1600

A/E INFO

APPROVED
FOR COMMANDER NAVFAC 8/14/2025
ACTIVITY
APPROVED BY LCDR ELIZABETH OLOKODE NAVFAC N.LON FEAD DIRECTOR NEW LONDON, GROTON, CT
SATISFACTORY TO DATE 05/27/2025

DES FJ	DRW MR	CHK DW	
PM/DM	SMS/CWJ		
BRANCH MANAGER	NEK		
CHIEF ENG/ARCH	JWJ		
FIRE PROTECTION	HPN		

DEPARTMENT OF THE NAVY
NAVAL FACILITIES ENGINEERING SYSTEMS COMMAND
MID-ATLANTIC
NAVAL FACILITIES ENGINEERING SYSTEMS COMMAND - MID-ATLANTIC
NAVAL STATION - NORFOLK, VA
NAVAL SUBMARINE BASE NEW LONDON
GROTON, CONNECTICUT
P-1102 WEAPONS MAGAZINE & ORDNANCE OPERATIONS FACILITY
TYPE G MAGAZINE
SECURITY PILASTER DETAILS

SCALE: AS NOTED
EPROJECT NO.: 1667770
CONSTR. CONTR. NO.
NAVFAC DRAWING NO. 12894194
SHEET 42 OF 91
S-509

FILE NAME: C:\pw_work\dr\den003\jcb2mhill_09050107\d1710459\S-509.dwg LAYOUT NAME: S-509 – SECURITY PILASTER DETAILS PLOTTED: Friday, June 13, 2025 – 9:52am USER: 09050107

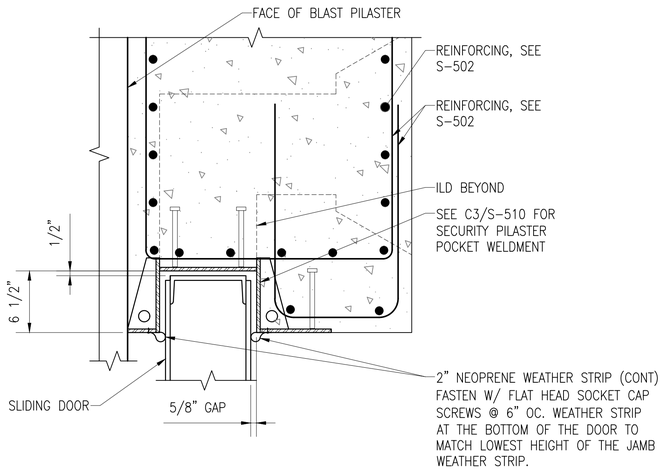

B1 SECTION - TYP SECURITY PILASTER

SCALE: 1 1/2" = 1'-0"

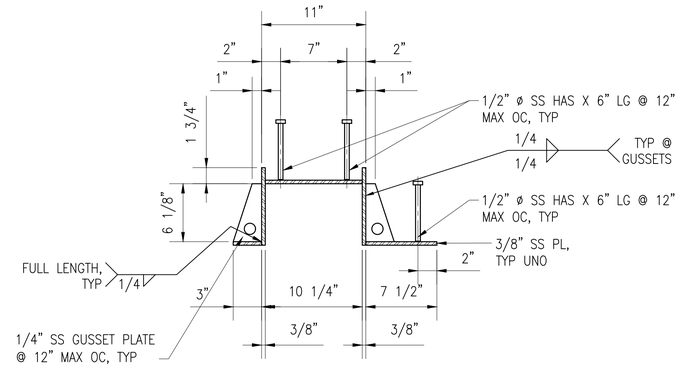

C3 DETAIL - TYP SECURITY PILASTER POCKET WELDMENT

SCALE: 1 1/2" = 1'-0"

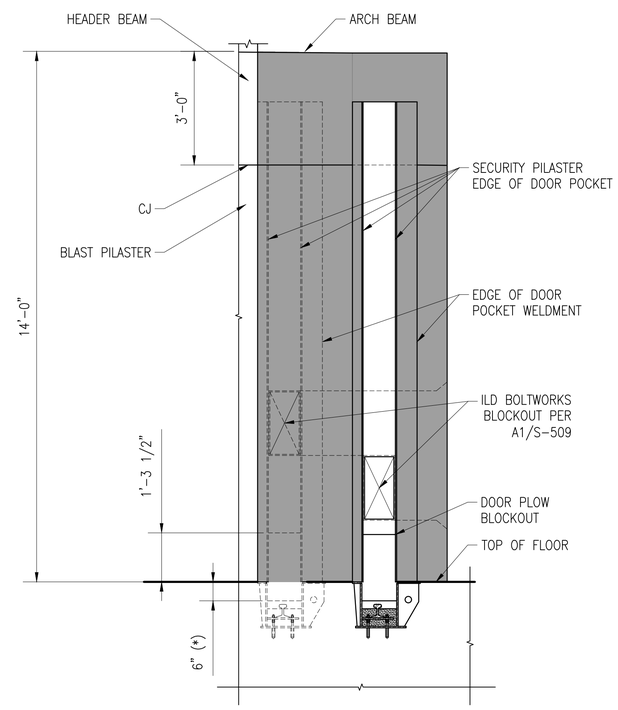

NOTES:

1. DIMENSIONS NOTED WITH AN (*) MUST BE COORDINATED BY THE DOOR MANUFACTURER ENSURING THE DOOR SYSTEM PERFORMS AS INTENDED.
2. SEE SHEET S-204 FOR LAYOUT OF ARCH/SECURITY PILASTER AND ARCH BEAM NOT SHOWN IN THIS DETAIL.
3. SEE SHEETS S-502 AND S-503 FOR REINFORCEMENT SIZE AND SPACING.

A3 SECURITY PILASTER ELEVATION

SCALE: 1/2" = 1'-0"

THESE DRAWINGS ARE AN EXACT REPLICA OF THE STANDARD MAGAZINE TYPE "G" PROVIDED BY NAVFAC. THE DESIGN WILL BE SITE ADAPTED AND MODIFIED TO MEET THE SPECIFIC GEOTECHNICAL AND LOADING CONDITIONS SPECIFIC TO NAVAL SUBMARINE BASE NEW LONDON, GROTON, CONNECTICUT.

SYM	DESCRIPTION	DATE	APPR.

NAVFAC

SEAL

Jacobs
1100 NORTH GLEBE ROAD
SUITE 500
ARLINGTON, VIRGINIA 22201
571.218.1000
FAX: 571.218.1600

A/E INFO

APPROVED
FOR COMMANDER NAVFAC 8/14/2025

ACTIVITY
APPROVED BY LCDR ELIZABETH OLOKODE NAVFAC NLON FEAD DIRECTOR NEW LONDON, GROTON, CT

SATISFACTORY TO DATE 05/27/2025

DES	FJ	DRW	MR	CHK	DW
PM/DM	SMS/CWJ				
BRANCH MANAGER	NEK				
CHIEF ENG/ARCH	JWJ				
FIRE PROTECTION	HPN				

DEPARTMENT OF THE NAVY
NAVAL FACILITIES ENGINEERING SYSTEMS COMMAND - MID-ATLANTIC
MID-ATLANTIC
NAVAL FACILITIES ENGINEERING SYSTEMS COMMAND
NAVAL STATION - NORFOLK, VA
NAVAL SUBMARINE BASE NEW LONDON
GROTON, CONNECTICUT
P-1102 WEAPONS MAGAZINE & ORDNANCE OPERATIONS FACILITY
TYPE G MAGAZINE

SECURITY PILASTER DETAILS

SCALE: AS NOTED
EPROJECT NO.: 1667770
CONSTR. CONTR. NO.
NAVFAC DRAWING NO. 12894195
SHEET 43 OF 91

S-510

FILE NAME: C:\pw_workdir\dms003\ph2mhsl_09050107\d1710459\S-510.dwg LAYOUT NAME: S-510 - SECURITY PILASTER DETAILS PLOTTED: Friday, June 13, 2025 - 9:52am USER: 09050107

MINIMUM TENSION LAP SPLICE LENGTHS ("1.3l_d")			MINIMUM EMBEDMENT LENGTHS FOR STANDARD END HOOKS ("l_{dh}")		STRAIGHT DEVELOPMENT LENGTH	
BAR SIZE	f' = 5,000 PSI				f' = 5,000 PSI	
	TOP BARS	OTHER BARS	BAR SIZE	f' ≥ 5,000 PSI	TOP BARS	OTHER BARS
#3	31.2	31.2	#3	6	–	–
#4	36.9	31.2	#4	8	17.1	13.2
#5	46.1	35.5	#5	10	23.2	17.9
#6	55.4	42.6	#6	12	33.7	25.9
#7	80.7	62.1	#7	13	57.3	44.1
#8	92.3	71.0	#8	15	–	–
#9	104.1	80.1	#9	17	80.4	61.8
#10	117.2	90.1	#10	19	–	–
#11	130.1	100.1	#11	22	–	–

NOTES:

1. IF CONCRETE COVER IS NOT GREATER THAN THE DIAMETER OF THE BAR OR THE CENTER TO CENTER SPACING IS NOT GREATER THAN BAR DIAMETERS, THEN VALUES MUST BE INCREASED BY 50%. ALL LAPS ARE TYPICAL TENSION LAP SPLICES U.N.O. ON PLANS OR DETAILS.
2. "TOP BARS" ARE HORIZONTAL BARS WITH MORE THAN 12 INCH DEPTH OF CONCRETE CAST BELOW THEM.
3. LAPS SPLICES AND EMBEDMENT LENGTHS SHOWN IN THIS DETAIL ARE BASED ON A DYNAMIC INCREASE FACTOR = 1.29. LAPS FOR REINFORCEMENT IN STRUCTURAL COMPONENTS NOT RELATED TO BLAST DESIGN (WING WALLS, FOUNDATIONS, SLAB-ON-GRADE) MAY BE REDUCED BY THE DYNAMIC INCREASE FACTOR. LAP SPLICES FOR REINFORCEMENT IN BLAST COMPONENTS (HEADER BEAM, PARAPET BEAM, ROOF SLAB, SIDE/ END WALLS, PILASTERS, INTERIOR COLUMNS) MAY NOT BE REDUCED BY THE DYNAMIC INCREASE FACTOR.
4. WHEN SPLICING BARS OF DIFFERENT SIZES, THE LAP SPLICE LENGTH MUST BE THE GREATER OF THE SPLICE LENGTH OF THE SMALLER BAR OR THE DEVELOPMENT LENGTH OF THE LARGER BAR.

C1 REINFORCEMENT SPLICE SCHEDULE

NOT TO SCALE

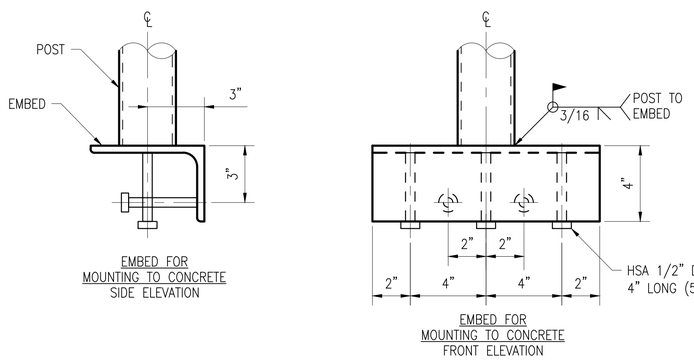

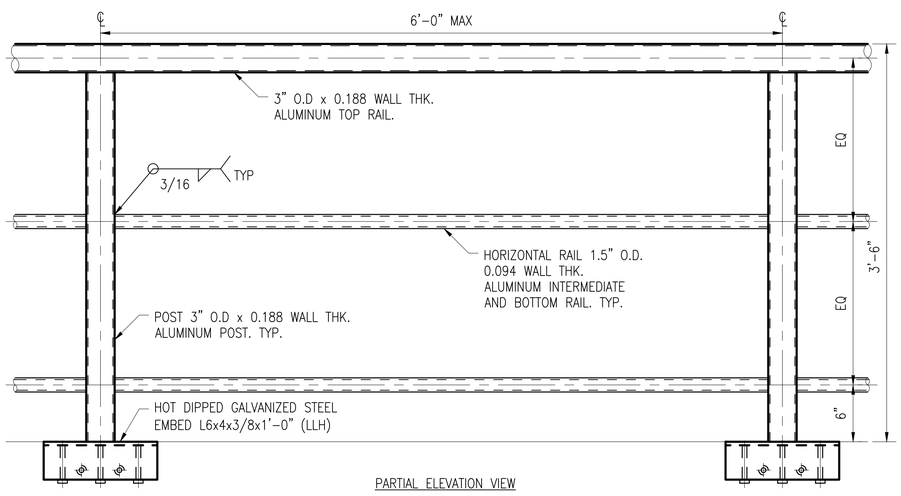

A1 ALUMINUM GUARDRAIL POST DETAIL

NOT TO SCALE

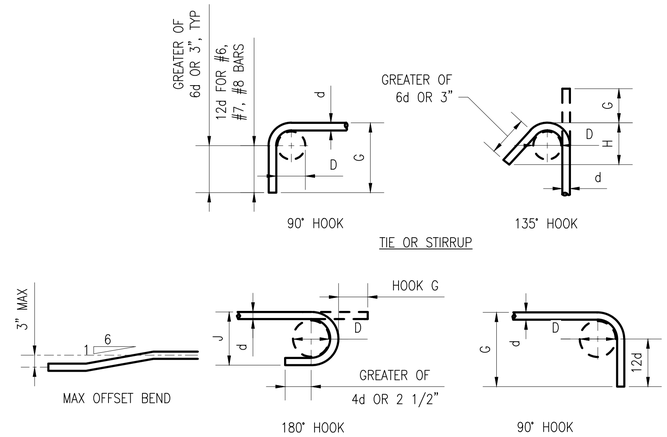

HOOK DIMENSIONS

STIRUP/TIE		135° HOOK		90° HOOK
BAR SIZE	D	G	H	G
#2	2	4.5	2.75	4.5
#4	2.5	5	3	4.75
#5	3.25	6	3.75	6
#6	4.5	8	4.5	12
#7	5.25	9	5.25	14
#8	6	10.5	6	16

PRINCIPAL REINFORCING		DIMENSIONS OF STANDARD 180° HOOKS, ALL GRADE		DIMENSIONS OF STANDARD 90° HOOKS, ALL GRADE
BAR SIZE	D	G	J	G
#3	2.25	5	3	6
#4	3	6	4	8
#5	3.75	7	5	10
#6	4.5	8	6	12
#7	5.25	10	7	14
#8	6	11	8	16
#9	9.5	15	11.75	19
#10	10.75	17	13.25	22
#11	12	19	14.75	24

NOTES:

1. D = FINISHED INSIDE BEND DIAMETER.
2. d = BAR DIAMETER.

C3 STANDARD HOOK DIMENSIONS

NOT TO SCALE

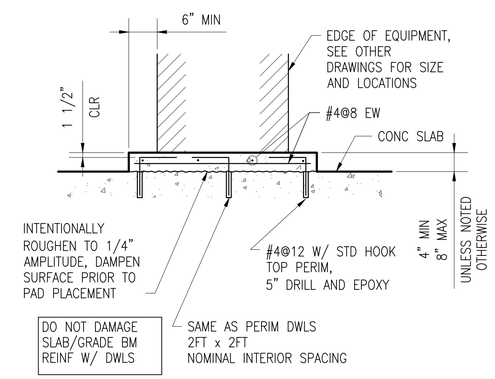

B3 TYPICAL MISCELLANEOUS HOUSEKEEPING PAD (INTERIOR)

NOT TO SCALE

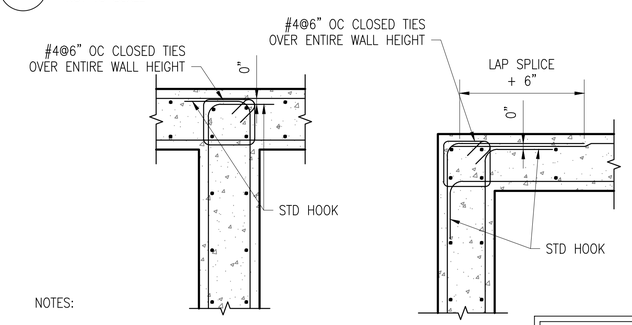

NOTES:

1. ALL HOOKS MUST BE STD 90 DEGREE HOOKS UNO.
2. SEE DRAWINGS FOR ADDITIONAL HORIZONTAL BARS. STAGGER BETWEEN TYPICAL REINF SPACING, EXTEND TO 1/5 OF DISTANCE TO NEAREST ADJACENT WALL IN EACH DIRECTION, UNO.

THESE DRAWINGS ARE AN EXACT REPLICA OF THE STANDARD MAGAZINE TYPE "G" PROVIDED BY NAVFAC. THE DESIGN WILL BE SITE ADAPTED AND MODIFIED TO MEET THE SPECIFIC GEOTECHNICAL AND LOADING CONDITIONS SPECIFIC TO NAVAL SUBMARINE BASE NEW LONDON, GROTON, CONNECTICUT.

A3 WALL REINFORCEMENT AT CORNERS AND INTERSECTIONS

NOT TO SCALE

SYM	DESCRIPTION	DATE	APPR

Jacobs
1100 NORTH GLEBE ROAD
SUITE 500
ARLINGTON, VIRGINIA 22201
571.218.1000
FAX: 571.218.1600

A/E INFO

APPROVED
FOR COMMANDER NAVFAC 8/14/2025

ACTIVITY
APPROVED BY LCDR ELIZABETH OLOKODE NAVFAC NLON FEAD DIRECTOR NEW LONDON, GROTON, CT

SATISFACTORY TO DATE 05/27/2025

DES	FJ	DRW	MR	CHK	DW

PM/DM	SMS/CWJ
BRANCH MANAGER	NEK
CHIEF ENG/ARCH	JWJ
FIRE PROTECTION	HPN

DEPARTMENT OF THE NAVY
NAVAL FACILITIES ENGINEERING SYSTEMS COMMAND
MID-ATLANTIC
NAVAL FACILITIES ENGINEERING SYSTEMS COMMAND - MID-ATLANTIC
NAVAL STATION - NORFOLK, VA
NAVAL SUBMARINE BASE NEW LONDON
GROTON, CONNECTICUT
P-1102 WEAPONS MAGAZINE & ORDNANCE OPERATIONS FACILITY
TYPE G MAGAZINE

TYPICAL CONCRETE DETAILS

SCALE: NOT TO SCALE
EPROJECT NO.: 1667770
CONSTR. CONTR. NO.
NAVFAC DRAWING NO.
12894196
SHEET 44 OF 91
S-511

FILE NAME: C:\pw_work\dir\den003\js2mhill_09050107\d1710459\S-511.dwg LAYOUT NAME: S-511- TYPICAL CONCRETE DETAILS PLOTTED: Friday, June 13, 2025 - 9:52am USER: 09050107

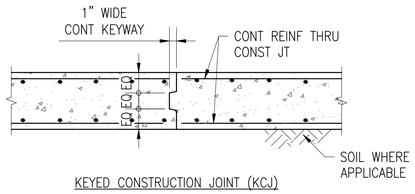

KEYED CONSTRUCTION JOINT (KCJ)

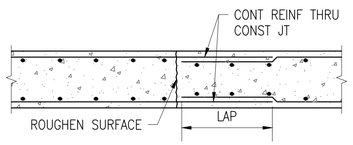

ROUGHENED CONSTRUCTION JOINT (CJ)

NOTES:

1. TO BE USED ONLY WHERE CALLED FOR IN THE CONTRACT DOCUMENTS, OR AS PERMITTED BY THE CONTRACTING OFFICER.

C1 CONSTRUCTION JOINT DETAIL

NOT TO SCALE

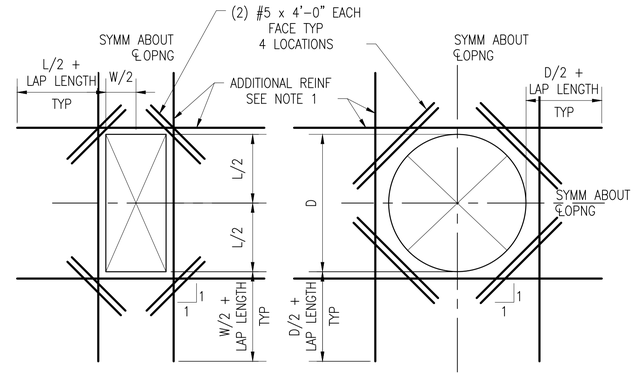

RECTANGULAR OPNG DETAIL

CIRCULAR OPNG DETAIL

NOTES:

1. PROVIDE ADDITIONAL REINFORCING THE SAME SIZE AS DISCONTINUOUS REINFORCEMENT AT OPENING. QUANTITY OF REINFORCING IN EACH DIRECTION MUST BE EQUAL TO OR ONE GREATER THAN THE NUMBER OF DISCONTINUOUS BARS. PLACE 1/2 OF ADDITIONAL REINFORCING BARS EACH SIDE OF OPENING, PLACE ADDITIONAL REINFORCEMENT AT 3" OC (TYPICAL BOTH DIRECTIONS AND ALL LAYERS OF REINFORCEMENT). START FIRST BAR 2" CLEAR OF OPENING.
2. EXTEND ADDITIONAL REINFORCING BEYOND EDGE OF OPENING AS SHOWN ABOVE. ADDITIONAL BARS SHALL TERMINATE AT THE END OF THE WALL WITH A STANDARD HOOK WHERE THE LENGTH OF THE WALL WILL NOT PERMIT BARS TO EXTEND AS SHOWN ABOVE.
3. TYPICAL WALL OR SLAB REINFORCING NOT SHOWN FOR CLARITY. TERMINATE TYPICAL REINFORCING 2" CLEAR OF OPENING.
4. ADDITIONAL REINFORCING AS SHOWN ABOVE IS REQUIRED FOR SLABS, WALLS, AND FOUNDATIONS WHERE THE OPENING SIZE IS GREATER THAN THE SPACING OF REINFORCING IN EITHER DIRECTION MINUS 4" OF CONCRETE COVER (2" COVER EACH SIDE OF OPENING).
5. PROVIDE OPENING ONLY WHERE SHOWN ON THE DRAWINGS. PROPOSED OPENINGS NOT SHOWN ON THE DRAWINGS MUST BE APPROVED BY THE CONTRACTING OFFICER.

C3 EXTRA REINFORCING AROUND OPENINGS

NOT TO SCALE

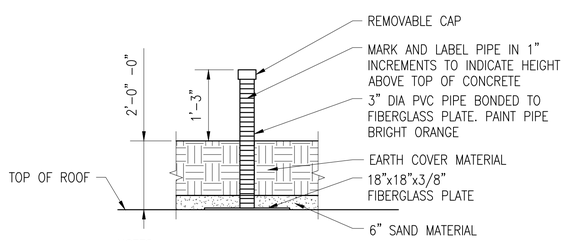

NOTES:

1. PLACE DEPTH GAUGE ABOVE WATERPROOFING MEMBRANE SYSTEM.
2. INSTALL DEPTH GAUGES AT A MAXIMUM GRID SPACING OF 30 FEET ON CENTER IN EACH DIRECTION.

A1 DEPTH GAUGE DETAIL

NOT TO SCALE

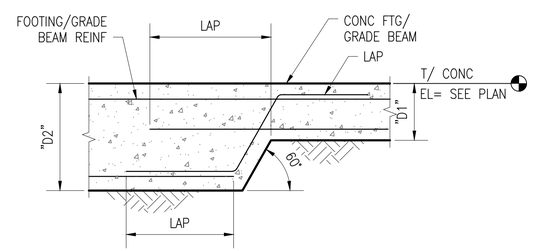

A3 TYPICAL BOTTOM STEP FOOTING/ GRADE BEAM

NOT TO SCALE

THESE DRAWINGS ARE AN EXACT REPLICA OF THE STANDARD MAGAZINE TYPE "G" PROVIDED BY NAVFAC. THE DESIGN WILL BE SITE ADAPTED AND MODIFIED TO MEET THE SPECIFIC GEOTECHNICAL AND LOADING CONDITIONS SPECIFIC TO NAVAL SUBMARINE BASE NEW LONDON, GROTON, CONNECTICUT.

SYM	DESCRIPTION	DATE	APPR

NAVFAC

SEAL

Jacobs
1100 NORTH GLEBE ROAD
SUITE 500
ARLINGTON, VIRGINIA 22201
571.218.1000
FAX: 571.218.1600

A/E INFO

APPROVED
DAVID P. TAYLOR
FOR COMMANDER NAVFAC 3/14/2025

ACTIVITY
APPROVED BY LCDR ELIZABETH OLOKODE NAVFAC NLON FEAD DIRECTOR NEW LONDON, GROTON, CT

SATISFACTORY TO DATE 05/27/2025

DES	FJ	DRW	MR	CHK	DW
PM/DM	SMS/CWJ				
BRANCH MANAGER	NEK				
CHIEF ENG/ARCH	JWJ				
FIRE PROTECTION	HPN				

DEPARTMENT OF THE NAVY
NAVAL FACILITIES ENGINEERING SYSTEMS COMMAND
MID-ATLANTIC
NAVAL FACILITIES ENGINEERING SYSTEMS COMMAND - MID-ATLANTIC
NAVAL STATION - NORFOLK, VA
NAVAL SUBMARINE BASE NEW LONDON
GROTON, CONNECTICUT
P-1102 WEAPONS MAGAZINE & ORDNANCE OPERATIONS FACILITY
TYPE G MAGAZINE
TYPICAL CONCRETE DETAILS

SCALE: NOT TO SCALE
EPROJECT NO.: 1667770
CONSTR. CONTR. NO.
NAVFAC DRAWING NO. 12894197
SHEET 45 OF 91
S-512

FILE NAME: C:\pw_workdir\dms0031\ch2mhill_09050107\d1710459\S-512.dwg LAYOUT NAME: S-512 - TYPICAL CONCRETE DETAILS PLOTTED: Friday, June 13, 2025 - 9:53am USER: 09050107

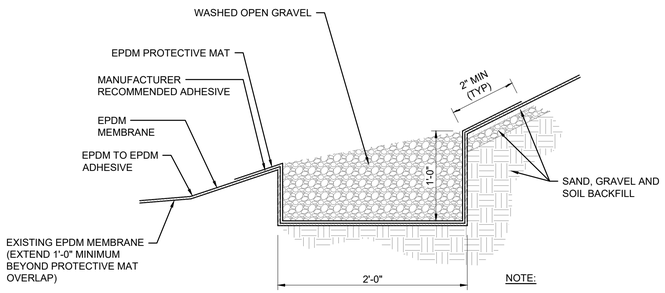

NOTE:

1. SIMILAR DETAIL BETWEEN MAGAZINES.

C1 EDGE DITCH DETAIL
NOT TO SCALE

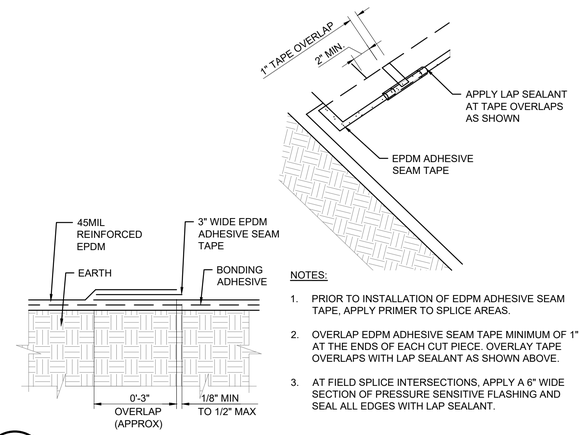

NOTES:

1. PRIOR TO INSTALLATION OF EDPM ADHESIVE SEAM TAPE, APPLY PRIMER TO SPLICE AREAS.
2. OVERLAP EDPM ADHESIVE SEAM TAPE MINIMUM OF 1" AT THE ENDS OF EACH CUT PIECE. OVERLAY TAPE OVERLAPS WITH LAP SEALANT AS SHOWN ABOVE.
3. AT FIELD SPLICE INTERSECTIONS, APPLY A 6" WIDE SECTION OF PRESSURE SENSITIVE FLASHING AND SEAL ALL EDGES WITH LAP SEALANT.

C2 EPDM SEAM DETAIL
NOT TO SCALE

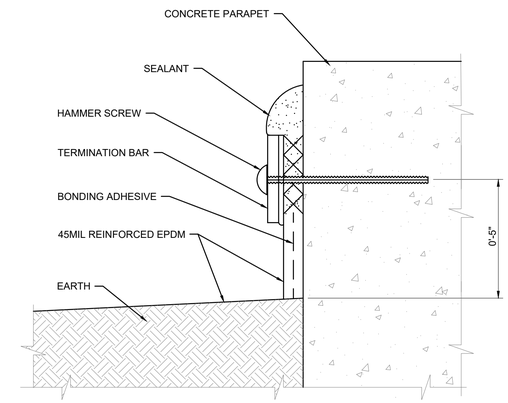

C4 ROOF DETAIL
NOT TO SCALE

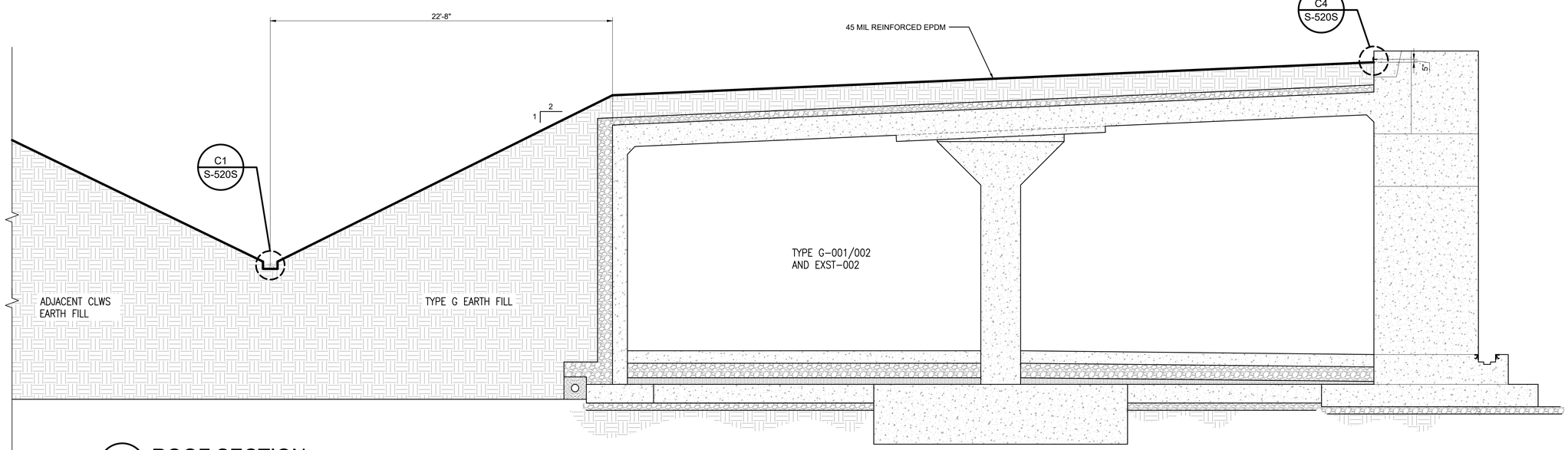

A1 ROOF SECTION
SCALE: 1/4" = 1'-0"

NO.	DESCRIPTION	DATE	APPR.

NAVFAC

Jacobs
1100 NORTH GLEBE ROAD
SUITE 500
ARLINGTON, VIRGINIA 22201
571.218.1000
FAX: 571.218.1600

A/E INFO

APPROVED
FOR COMMANDER NAVFAC 8/14/2025

ACTIVITY
APPROVED BY LCDR ELIZABETH OLOKODE NAVFAC NLON FEAD DIRECTOR NEW LONDON, GROTON, CT
SATISFACTORY TO DATE 05/27/2025

DES	LAP	DRW AXC	CHK SK
PM/DM	SMS/CWJ		
BRANCH MANAGER	NEK		
CHIEF ENG/ARCH	JWJ		
FIRE PROTECTION	HPN		

DEPARTMENT OF THE NAVY
NAVAL FACILITIES ENGINEERING SYSTEMS COMMAND
MID-ATLANTIC
NAVAL FACILITIES ENGINEERING SYSTEMS COMMAND - MID-ATLANTIC
NAVAL STATION - NORFOLK, VA
NAVAL SUBMARINE BASE NEW LONDON
GROTON, CONNECTICUT
P-1102 WEAPONS MAGAZINE & ORDNANCE OPERATIONS FACILITY
TYPE G MAGAZINE

EPDM COVER DETAILS - SITE ADAPTED

SCALE: NONE
EPROJECT NO.: 1667770
CONSTR. CONTR. NO.
NAVFAC DRAWING NO. 12894198
SHEET 46 OF 91

S-520S

FILE NAME: C:\pw_workdir\dms003\jb2mhill_09050107\d1710459\S-520S.dwg LAYOUT NAME: S-520S PLOTTED: Friday, June 13, 2025 - 9:53am USER: 09050107

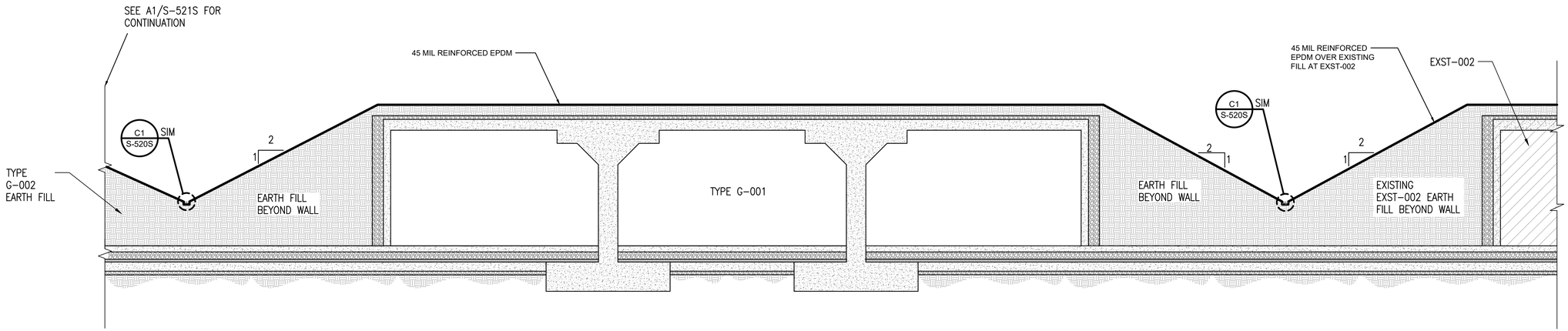

C1 ROOF SECTION
SCALE: 1/8" = 1'-0"

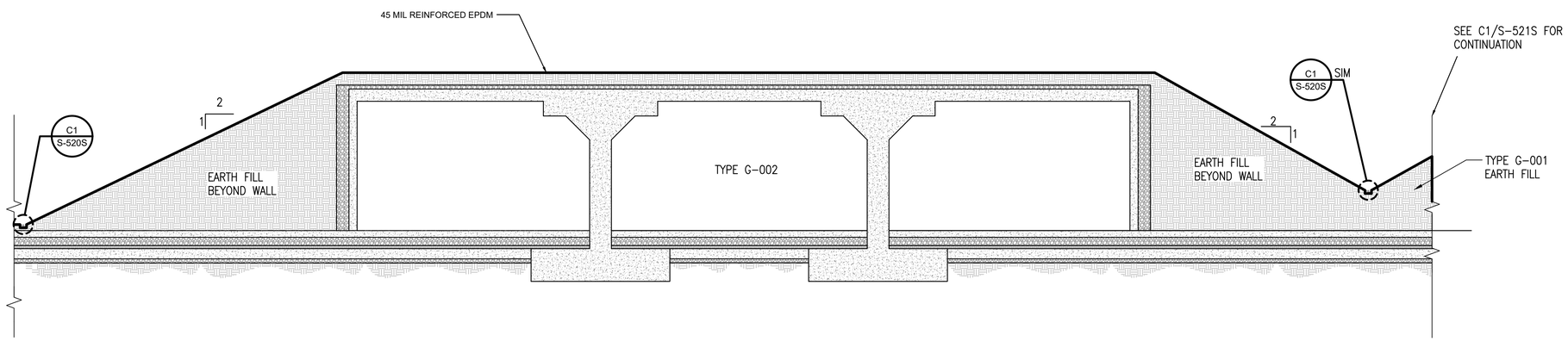

A1 ROOF SECTION
SCALE: 1/8" = 1'-0"

SYM	DESCRIPTION	DATE	APPR.

NAVFAC

LAURA ARICO PRESLEY
REGISTERED ENGINEER
AGRICULTURE
COMMERCE
No. 106362
STATE OF TENNESSEE
06/27/2025
SEAL

Jacobs
1100 NORTH GLEBE ROAD
SUITE 500
ARLINGTON, VIRGINIA 22201
571.218.1000
FAX: 571.218.1600

A/E INFO

APPROVED
FOR COMMANDER NAVFAC 8/14/2025

ACTIVITY
APPROVED BY LCDR ELIZABETH OLOKODE NAVFAC NLON FEAD DIRECTOR NEW LONDON, GROTON, CT

SATISFACTORY TO DATE 05/27/2025

DES	LAP	DRW	AXC	CHK	SK

PM/DM	SMS/CWJ
BRANCH MANAGER	NEK
CHIEF ENG/ARCH	JWJ
FIRE PROTECTION	HPN

DEPARTMENT OF THE NAVY
NAVAL FACILITIES ENGINEERING SYSTEMS COMMAND
MID-ATLANTIC

NAVAL FACILITIES ENGINEERING SYSTEMS COMMAND - MID-ATLANTIC
NAVAL STATION - NORFOLK, VA

NAVAL SUBMARINE BASE NEW LONDON
GROTON, CONNECTICUT

P-1102 WEAPONS MAGAZINE & ORDNANCE OPERATIONS FACILITY
TYPE G MAGAZINE

EPDM COVER SECTIONS-SITE ADAPTED

SCALE: NONE
EPROJECT NO.: 1667770
CONSTR. CONTR. NO.
NAVFAC DRAWING NO.
12894199
SHEET 47 OF 91

S-521S

FILE NAME: C:\pw_workdir\dms003\jb2mhill_09050107\d1710459\S-521S.dwg LAYOUT NAME: S-521S PLOTTED: Friday, June 13, 2025 - 9:53am USER: 09050107

DOOR SCHEDULE							
DOOR TYPE	SIZE			MATERIAL	FINISH	HARDWARE	U_VALUE
	HEIGHT	WIDTH	THICKNESS				
B	13'-1" INT. 12'-11 1/4" EXT.	31'-0"	0'-8 3/4"	STEEL	PAINT	2	PER FACILITY DESIGN STANDARD
A	6'-8"	6'-0"	0'-1 3/4"	INSULATED HOLLOW METAL	PAINT	1	

NOTE: TYPE A DOOR MUST BE A DOUBLE EGRESS DOOR – RHR (RIGHT HAND REVERSE).

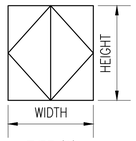

TYPE 'A'

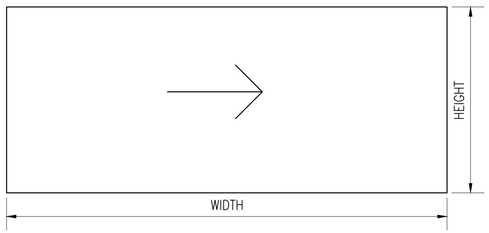

TYPE 'B': SLIDING BLAST DOOR FOR OPENING SEE SHEET C1/ S-201

C1 DOOR LEGEND

SCALE: 3/16" = 1'-0"

0 4' 8' 16'

HW SET #1	
DOOR: TYPE A	
QTY	HARDWARE
6	HINGE (A5111) FULL MORTISE W/ MODIFIED NON-REMOVABLE PIN
2	EXIT DEVICE (FF-L-2890B)
1	CYLINDER W/ EXTERNAL LEVER COMPATIBLE W/ EXIT DEVICE
1	ELECTRIC STRIKE (E09391)
1	ELECTRIC STRIKE (E09391)
2	KICK PLATE (J102)
2	OVERHEAD STOP (C01541)
1	REMOVABLE ASTRAGAL
1	THRESHOLD (J35100)
1	HEAD GASKET (R0Y164)
1	JAMB GASKET (R0Y164)
1	RAIN DRIP (R0Y976)
1	SWEEP (R0Y416)
1	BALANCE MAGNETIC SWITCH (UL 634 HSS)
1	INTERNAL LOCKING DEVICE (ILD)
1	INTRUSION DETECTION SYSTEM (IDS)

HW SET #2	
DOOR: TYPE B	
QTY	HARDWARE
1	INTERNAL LOCKING DEVICE (ILD)
1	INTRUSION DETECTION SYSTEM (IDS)
1	SWITCH (UL 634 HSS)
REFER TO DETAILS FOR SPECIFIC GASKETING AND FABRICATED ELEMENTS.	

GENERAL NOTES:

1. ALL FINISHES, BHMA 630; 626
2. LOCKSETS AND LATCHES MUST COMPLY WITH (ANSI/ BHMA A156.13, SERIES 1000, OPERATIONAL GRADE 1, SECURITY GRADE (L) (2) (AND) (ANSI/ BHMA A156.2, SERIES 4000, GRADE L).
3. COORDINATE ALL HARDWARE SECURITY REQUIREMENTS WITH THE SERVICE AND INSTALLATION SECURITY PERSONNEL.
4. ALL HIGH SECURITY PADLOCKS ARE GFCI.

A1 DOOR HARDWARE SCHEDULE

NOT TO SCALE

THESE DRAWINGS ARE AN EXACT REPLICA OF THE STANDARD MAGAZINE TYPE "G" PROVIDED BY NAVFAC. THE DESIGN WILL BE SITE ADAPTED AND MODIFIED TO MEET THE SPECIFIC GEOTECHNICAL AND LOADING CONDITIONS SPECIFIC TO NAVAL SUBMARINE BASE NEW LONDON, GROTON, CONNECTICUT.

SYM	DESCRIPTION	DATE	APPR.

NAVFAC

SEAL

Jacobs
1100 NORTH GLEBE ROAD
SUITE 500
ARLINGTON, VIRGINIA 22201
571.218.1000
FAX: 571.218.1600

A/E INFO

APPROVED
FOR COMMANDER NAVFAC 8/14/2025

ACTIVITY
APPROVED BY LCDR ELIZABETH OLOKODE NAVFAC NLON FEAD DIRECTOR NEW LONDON, GROTON, CT

SATISFACTORY TO DATE 05/27/2025

DES FJ	DRW MR	CHK DW
PM/DM	SMS/CWJ	
BRANCH MANAGER	NEK	
CHIEF ENG/ARCH	JWJ	
FIRE PROTECTION	HPN	

DEPARTMENT OF THE NAVY
NAVAL FACILITIES ENGINEERING SYSTEMS COMMAND - MID-ATLANTIC
MID-ATLANTIC
NAVAL FACILITIES ENGINEERING SYSTEMS COMMAND
NAVAL STATION - NORFOLK, VA
NAVAL SUBMARINE BASE NEW LONDON
GROTON, CONNECTICUT
P-1102 WEAPONS MAGAZINE & ORDNANCE OPERATIONS FACILITY
TYPE G MAGAZINE
DOOR NOTES AND SCHEDULES

SCALE: AS NOTED
EPROJECT NO.: 1667770
CONSTR. CONTR. NO.
NAVFAC DRAWING NO. 12894200
SHEET 48 OF 91
S-701

FILE NAME: C:\pw_work\dms\jdm033\ch2mhill_09050107\d1710459\S-701.dwg LAYOUT NAME: S-701 – DOOR NOTES AND SCHEDULES PLOTTED: Friday, June 13, 2025 – 9:54am USER: 09050107

THESE DRAWINGS ARE AN EXACT REPLICA OF THE STANDARD MAGAZINE TYPE "G" PROVIDED BY NAVFAC. THE DESIGN WILL BE SITE ADAPTED AND MODIFIED TO MEET THE SPECIFIC GEOTECHNICAL AND LOADING CONDITIONS SPECIFIC TO NAVAL SUBMARINE BASE NEW LONDON, GROTON, CONNECTICUT.

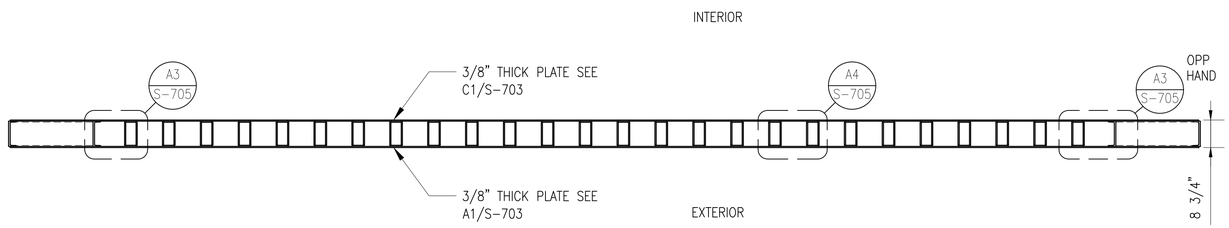

C1 DOOR FRAMING SECTION

SCALE: 1/2" = 1'-0"

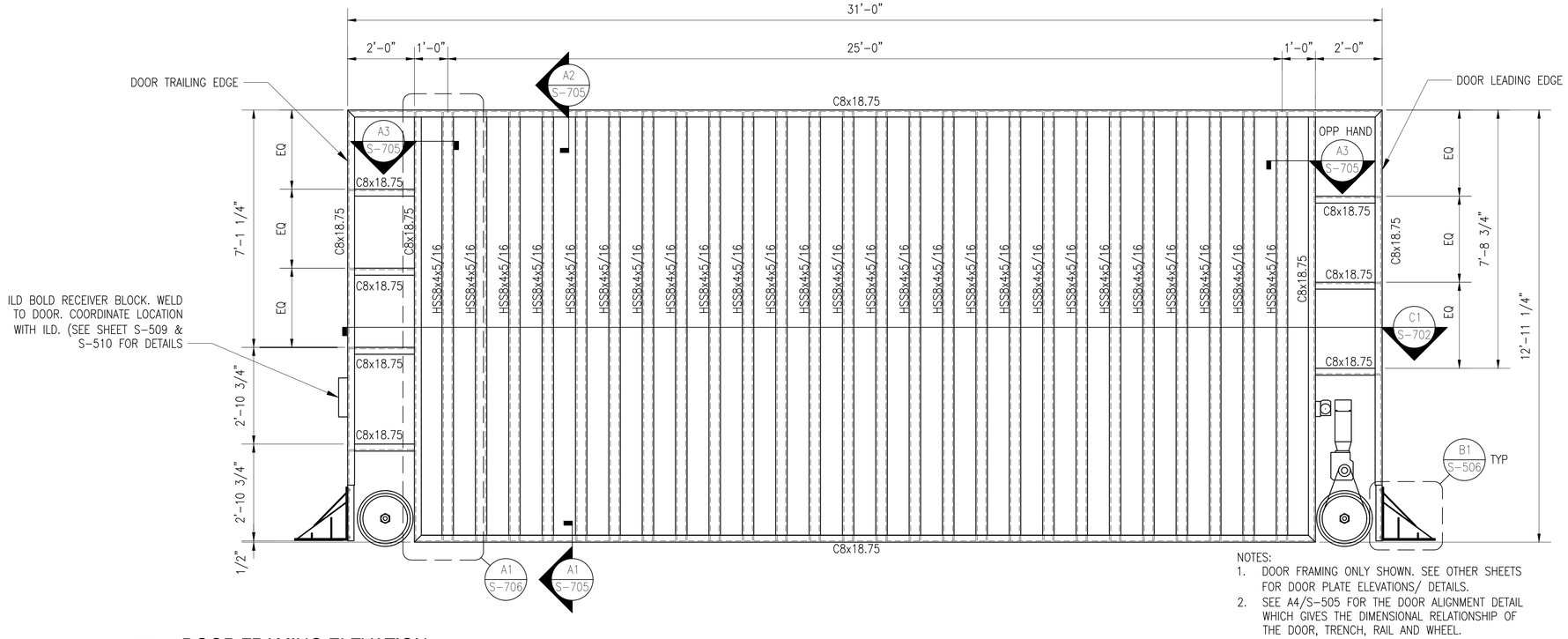

NOTES:
1. DOOR FRAMING ONLY SHOWN. SEE OTHER SHEETS FOR DOOR PLATE ELEVATIONS/ DETAILS.
2. SEE A4/S-505 FOR THE DOOR ALIGNMENT DETAIL WHICH GIVES THE DIMENSIONAL RELATIONSHIP OF THE DOOR, TRENCH, RAIL AND WHEEL.

A1 DOOR FRAMING ELEVATION

SCALE: 1/2" = 1'-0"

SYM	DESCRIPTION	DATE	APPR.

NAVFAC

SEAL

Jacobs
1100 NORTH GLEBE ROAD
SUITE 500
ARLINGTON, VIRGINIA 22201
571.218.1000
FAX: 571.218.1600

A/E INFO

APPROVED
SIGNATURE
FOR COMMANDER NAVFAC 8/14/2025

ACTIVITY
APPROVED BY LCDR ELIZABETH OLOKODE NAVFAC NLON FEAD DIRECTOR NEW LONDON, GROTON, CT

SATISFACTORY TO DATE 05/27/2025

DES	FJ	DRW	MR	CHK	DW
PM/DM	SMS/CWJ				
BRANCH MANAGER	NEK				
CHIEF ENG/ARCH	JWJ				
FIRE PROTECTION	HPN				

DEPARTMENT OF THE NAVY
NAVAL FACILITIES ENGINEERING SYSTEMS COMMAND
MID-ATLANTIC
NAVAL FACILITIES ENGINEERING SYSTEMS COMMAND - MID-ATLANTIC
NAVAL STATION - NORFOLK, VA
NAVAL SUBMARINE BASE NEW LONDON
GROTON, CONNECTICUT
P-1102 WEAPONS MAGAZINE & ORDNANCE OPERATIONS FACILITY
TYPE G MAGAZINE
DOOR ELEVATIONS

SCALE: 1/2" = 1'-0"
EPROJECT NO.: 1667770
CONSTR. CONTR. NO.
NAVFAC DRAWING NO.
12894201
SHEET 49 OF 91
S-702

FILE NAME: C:\pw_work\d\dsr0003\jx2mchll_09050107\d1710459\S-702.dwg LAYOUT NAME: S-702 - DOOR ELEVATIONS PLOTTED: Friday, June 13, 2025 - 9:54am USER: 09050107

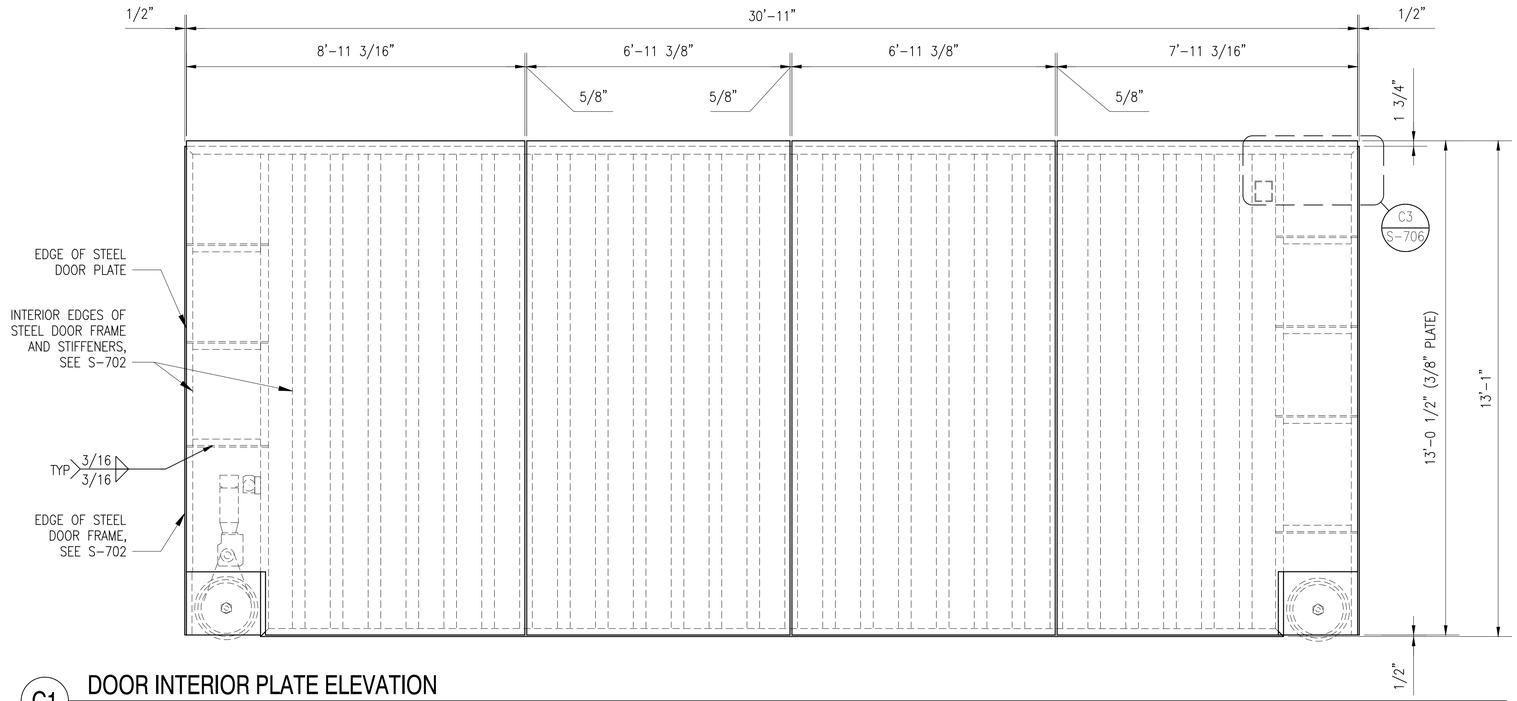

C1 DOOR INTERIOR PLATE ELEVATION

SCALE: 1/2" = 1'-0"

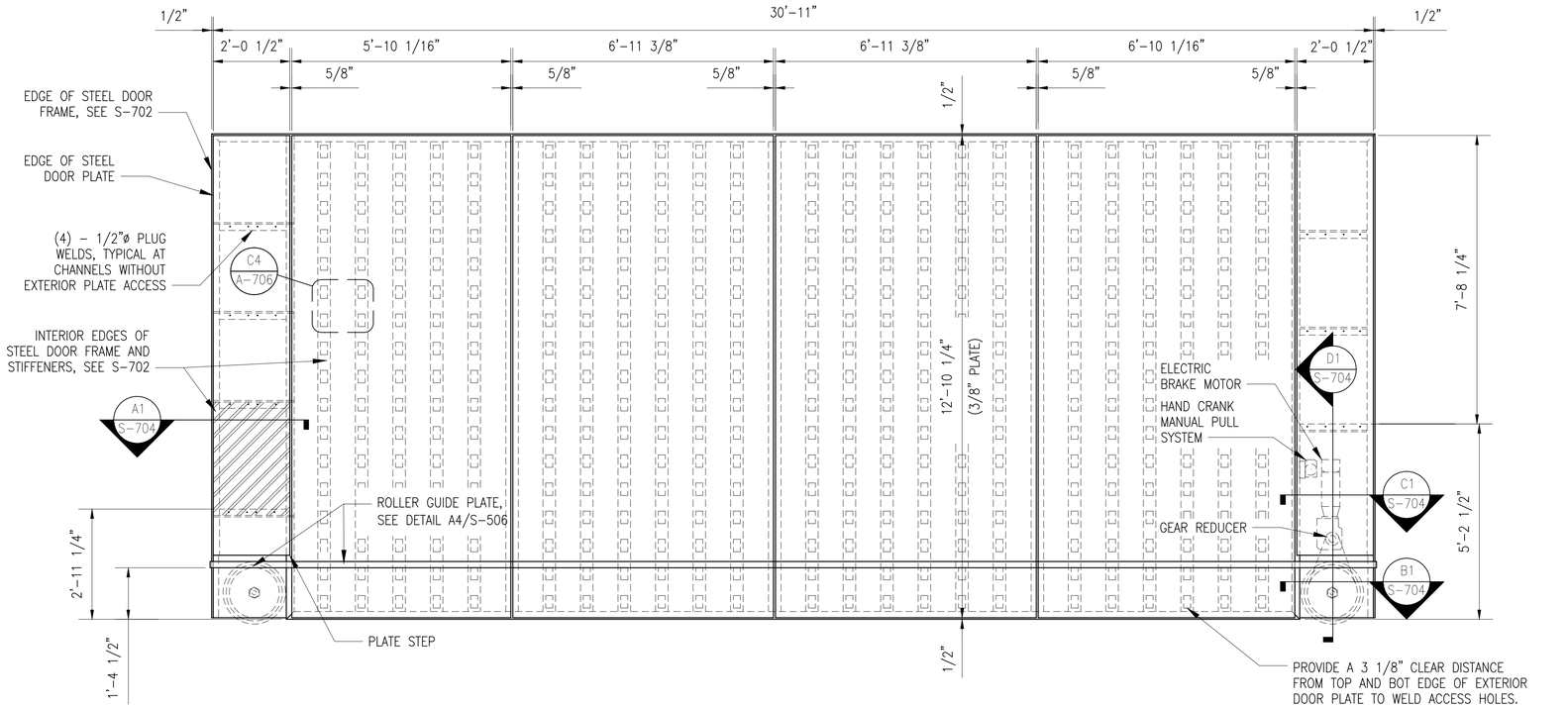

A1 DOOR EXTERIOR PLATE ELEVATION

SCALE: 1/2" = 1'-0"

THESE DRAWINGS ARE AN EXACT REPLICA OF THE STANDARD MAGAZINE TYPE "G" PROVIDED BY NAVFAC. THE DESIGN WILL BE SITE ADAPTED AND MODIFIED TO MEET THE SPECIFIC GEOTECHNICAL AND LOADING CONDITIONS SPECIFIC TO NAVAL SUBMARINE BASE NEW LONDON, GROTON, CONNECTICUT.

SYM	DESCRIPTION	DATE	APPR

NAVFAC

SEAL

Jacobs
1100 NORTH GLEBE ROAD
SUITE 500
ARLINGTON, VIRGINIA 22201
571.218.1000
FAX: 571.218.1600

A/E INFO

APPROVED
FOR COMMANDER NAVFAC 8/14/2025

ACTIVITY
APPROVED BY LCDR ELIZABETH OLOKODE NAVFAC NLON FEAD DIRECTOR NEW LONDON, GROTON, CT

SATISFACTORY TO DATE 05/27/2025

DES	FJ	DRW	MR	CHK	DW

PM/DM	SMS/CWJ
BRANCH MANAGER	NEK
CHIEF ENG/ARCH	JWJ
FIRE PROTECTION	HPN

DEPARTMENT OF THE NAVY
NAVAL FACILITIES ENGINEERING SYSTEMS COMMAND - MID-ATLANTIC
MID-ATLANTIC
NAVAL FACILITIES ENGINEERING SYSTEMS COMMAND
NAVAL STATION - NORFOLK, VA
NAVAL SUBMARINE BASE NEW LONDON
GROTON, CONNECTICUT
P-1102 WEAPONS MAGAZINE & ORDNANCE OPERATIONS FACILITY
TYPE G MAGAZINE
DOOR PLATE ELEVATIONS

SCALE: 1/2" = 1'-0"
EPROJECT NO.: 1667770
CONSTR. CONTR. NO.
NAVFAC DRAWING NO. 12894202
SHEET 50 OF 91

S-703

FILE NAME: C:\pw_work\dms\jdenf033\ch2mhill_09050107\d1710459\S-703.dwg LAYOUT NAME: S-703 - DOOR PLATE ELEVATIONS PLOTTED: Friday, June 13, 2025 - 9:54am USER: 09050107

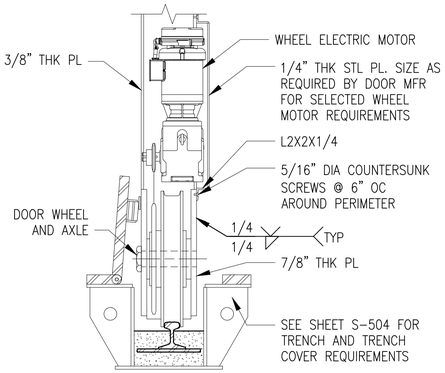

D1 DETAIL - DOOR WHEEL

SCALE: 1" = 1'-0"

0 6" 1' 2'

DESIGN/MANUFACTURING NOTES:

1. MOTOR INSTALLATION SHOWN IS NOTIONAL AND IS FOR BIDDING PURPOSES AND MAY VARY BASED ON DOOR MANUFACTURER'S APPROVED DESIGN.
2. DOOR MANUFACTURER'S DESIGN MUST ALLOW FOR MAINTENANCE OF THE MOTOR ASSEMBLY AND ITS COMPONENTS, INCLUDING REMOVAL OF AND REPLACEMENT OF THE MOTOR ASSEMBLY.
3. USE STANDARD PARTS AS MUCH AS POSSIBLE.
4. ACCESS TO THE MOTOR ASSEMBLY IS NOT NECESSARILY LIMITED TO ONE SIDE OF THE DOOR. IF ACCESS TO BOTH SIDES OF THE DOOR IS USED, IT MUST BE SHOWN THAT THE WHEEL LOAD PATH THROUGH THE SUPPORTING PLATES IS ADEQUATE.
5. A MOTOR ASSEMBLY MOUNTED INTERNAL TO THE DOOR IS PREFERRED; HOWEVER, A MOTOR ASSEMBLY MOUNTED ON THE EXTERIOR OF THE DOOR MAY BE ACCEPTABLE IF APPROVED.
6. SEE DETAIL C3 ON SHEET S-704 FOR ALTERNATIVE DOOR DRIVE ARRANGEMENT.
7. DOOR MANUFACTURER MUST PROVIDE COOLING OF THE GEAR MOTOR IF FOUND NECESSARY.

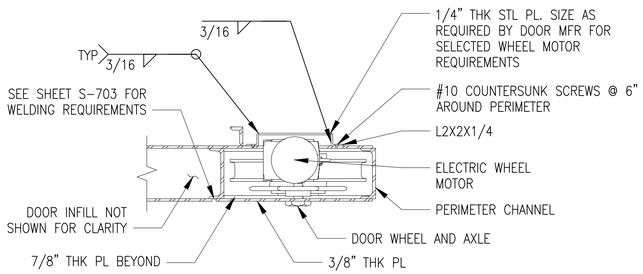

C1 DETAIL - DOOR WHEEL AND MOTOR DOOR

SCALE: 1" = 1'-0"

0 6" 1' 2'

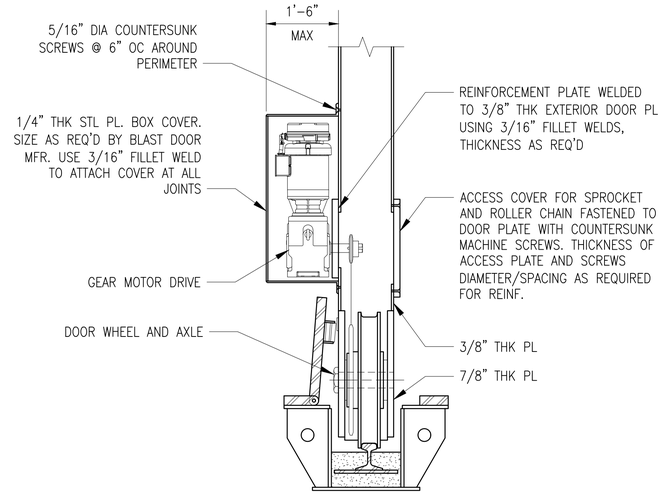

DESIGN/MANUFACTURING NOTES:

1. MOTOR INSTALLATION SHOWN IS NOTIONAL AND IS FOR BIDDING PURPOSES AND MAY VARY BASED ON DOOR MANUFACTURER'S APPROVED DESIGN.
2. DOOR MANUFACTURER'S DESIGN MUST ALLOW FOR MAINTENANCE OF THE MOTOR ASSEMBLY AND ITS COMPONENTS, INCLUDING REMOVAL OF AND REPLACEMENT OF THE MOTOR ASSEMBLY.
3. USE STANDARD PARTS AS MUCH AS POSSIBLE.
4. ACCESS TO THE MOTOR ASSEMBLY IS NOT NECESSARILY LIMITED TO ONE SIDE OF THE DOOR. IF ACCESS TO BOTH SIDES OF THE DOOR IS USED, IT MUST BE SHOWN THAT THE WHEEL LOAD PATH THROUGH THE SUPPORTING PLATES IS ADEQUATE.
5. A MOTOR ASSEMBLY MOUNTED INTERNAL TO THE DOOR IS PREFERRED; HOWEVER, A MOTOR ASSEMBLY MOUNTED ON THE EXTERIOR OF THE DOOR MAY BE ACCEPTABLE IF APPROVED.
6. DOOR MANUFACTURER MUST PROVIDE COOLING OF THE GEAR MOTOR IF FOUND NECESSARY.

C3 DETAIL - DOOR ALTERNATE DRIVE ARRANGEMENT

SCALE: 1" = 1'-0"

0 6" 1' 2'

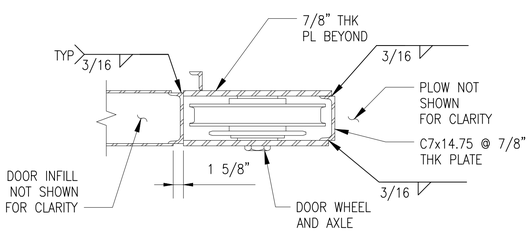

B1 DETAIL - DOOR WHEEL

SCALE: 1" = 1'-0"

0 6" 1' 2'

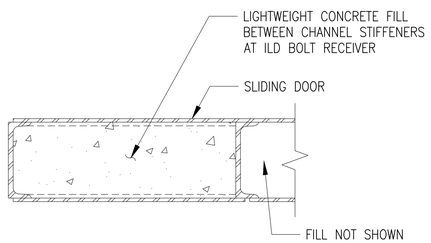

NOTES:

1. SEE SHEET S-705 FOR WELDING REQUIREMENTS.

A1 DETAIL - ILD BOLT RECEIVER DOOR FILL

SCALE: 1 1/2" = 1'-0"

0 6" 1' 2'

THESE DRAWINGS ARE AN EXACT REPLICA OF THE STANDARD MAGAZINE TYPE "G" PROVIDED BY NAVFAC. THE DESIGN WILL BE SITE ADAPTED AND MODIFIED TO MEET THE SPECIFIC GEOTECHNICAL AND LOADING CONDITIONS SPECIFIC TO NAVAL SUBMARINE BASE NEW LONDON, GROTON, CONNECTICUT.

SYM	DESCRIPTION	DATE	APPR.

NAVFAC

SEAL

Jacobs
1100 NORTH GLEBE ROAD
SUITE 500
ARLINGTON, VIRGINIA 22201
571.218.1000
FAX: 571.218.1600

A/E INFO.

APPROVED

FOR COMMANDER NAVFAC 8/14/2025

ACTIVITY
APPROVED BY LCDR ELIZABETH OLOKODE NAVFAC NLON FEAD DIRECTOR NEW LONDON, GROTON, CT

SATISFACTORY TO DATE 05/27/2025

DES	FJ	DRW	MR	CHK	DW
PM/DM	SMS/CWJ				
BRANCH MANAGER	NEK				
CHIEF ENG/ARCH	JWJ				
FIRE PROTECTION	HPN				

DEPARTMENT OF THE NAVY
NAVAL FACILITIES ENGINEERING SYSTEMS COMMAND - MID-ATLANTIC
MID-ATLANTIC
NAVAL FACILITIES ENGINEERING SYSTEMS COMMAND
NAVAL STATION - NORFOLK, VA
NAVAL SUBMARINE BASE NEW LONDON
GROTON, CONNECTICUT
P-1102 WEAPONS MAGAZINE & ORDNANCE OPERATIONS FACILITY
TYPE G MAGAZINE
DOOR DETAILS

SCALE: AS NOTED
EPROJECT NO.: 1667770
CONSTR. CONTR. NO.
NAVFAC DRAWING NO. 12894203
SHEET 51 OF 91

S-704

FILE NAME: C:\pw_work\dir\dev003\\p2mhill_09050107\d1710459\S-704.dwg LAYOUT NAME: S-704 - DOOR DETAILS PLOTTED: Friday, June 13, 2025 - 9:55am USER: 09050107

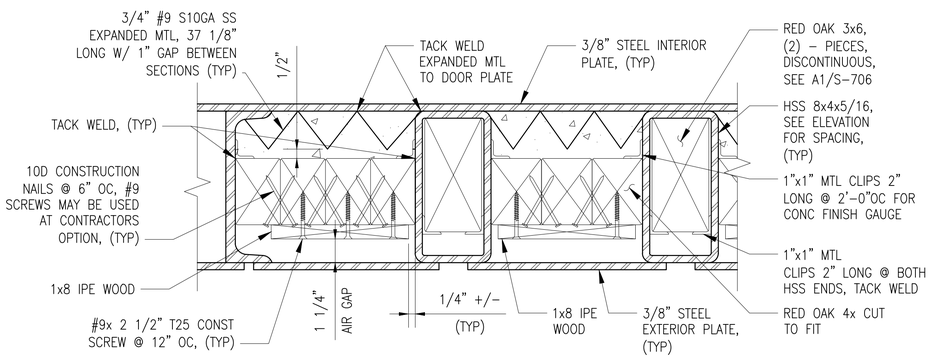

C1 DOOR STIFFENER AND INFILL LAYOUT - TOP/ BOTTOM DOOR SECTIONS
SCALE: 3" = 1'-0"

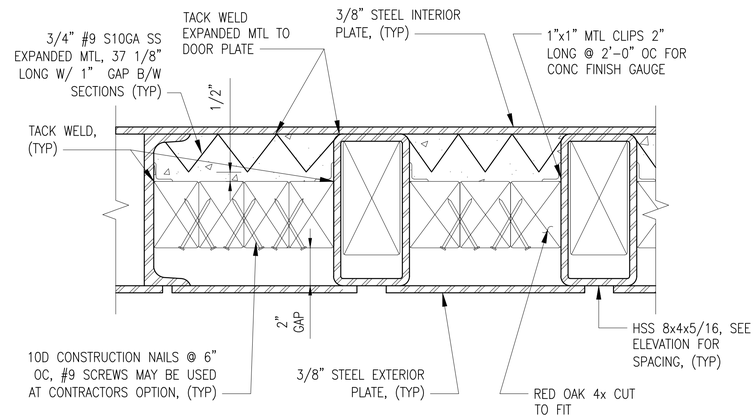

C3 DOOR STIFFENER AND FILL LAYOUT - MIDDLE DOOR SECTIONS
SCALE: 3" = 1'-0"

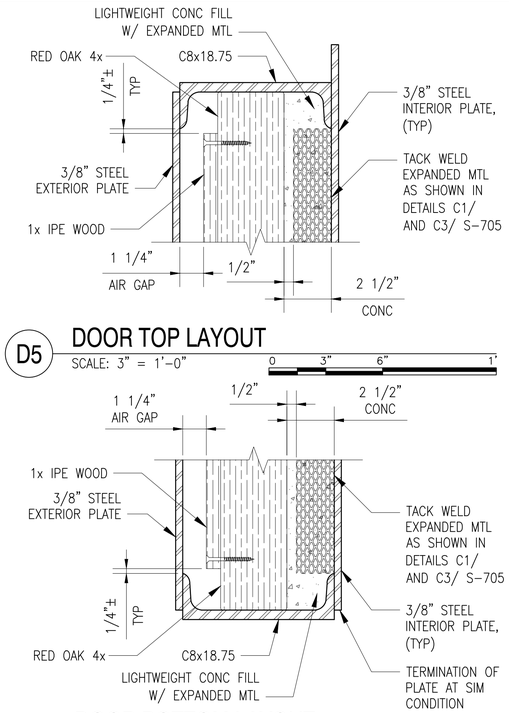

D5 DOOR TOP LAYOUT
SCALE: 3" = 1'-0"

C5 DOOR BOTTOM LAYOUT
SCALE: 3" = 1'-0"

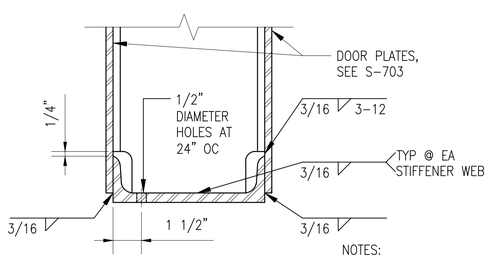

NOTES:
1. DOOR INFILL NOT SHOWN FOR CLARITY.

A1 DETAIL AT BOTTOM OF DOOR
SCALE: 3" = 1'-0"

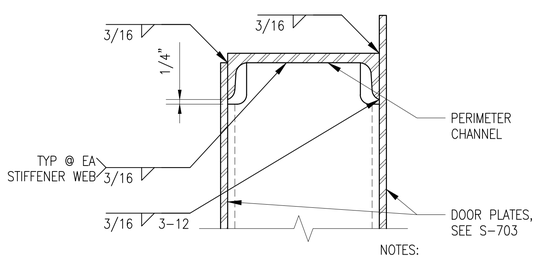

NOTES:
1. DOOR INFILL NOT SHOWN FOR CLARITY.

A2 DETAIL AT TOP OF DOOR
SCALE: 3" = 1'-0"

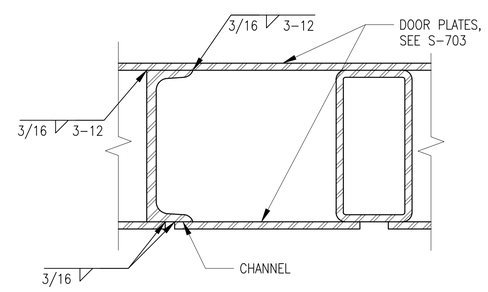

NOTES:
1. DOOR INFILL NOT SHOWN FOR CLARITY.

A3 WELD DETAIL AT DOOR EDGE
SCALE: 3" = 1'-0"

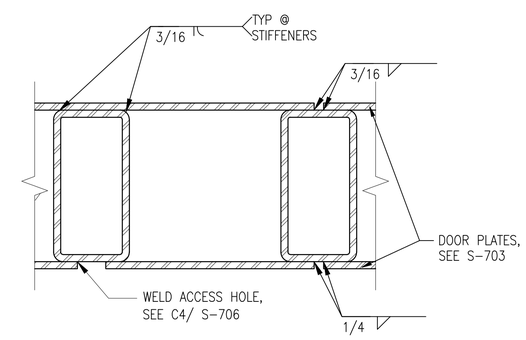

NOTES:
1. DOOR INFILL NOT SHOWN FOR CLARITY.

A4 WELD DETAIL AT INTERIOR STIFFENERS
SCALE: 3" = 1'-0"

THESE DRAWINGS ARE AN EXACT REPLICA OF THE STANDARD MAGAZINE TYPE "G" PROVIDED BY NAVFAC. THE DESIGN WILL BE SITE ADAPTED AND MODIFIED TO MEET THE SPECIFIC GEOTECHNICAL AND LOADING CONDITIONS SPECIFIC TO NAVAL SUBMARINE BASE NEW LONDON, GROTON, CONNECTICUT.

SYM	DESCRIPTION	DATE	APPR

NAVFAC

SEAL

Jacobs
1100 NORTH GLEBE ROAD
SUITE 500
ARLINGTON, VIRGINIA 22201
571.218.1000
FAX: 571.218.1600

A/E INFO

APPROVED
FOR COMMANDER NAVFAC 8/14/2025

ACTIVITY
APPROVED BY LCDR ELIZABETH OLOKODE NAVFAC NLON FEAD DIRECTOR NEW LONDON, GROTON, CT

SATISFACTORY TO DATE 05/27/2025

DES	FJ	DRW	MR	CHK	DW

PM/DM	SMS/CWJ
BRANCH MANAGER	NEK
CHIEF ENG/ARCH	JWJ
FIRE PROTECTION	HPN

DEPARTMENT OF THE NAVY
NAVAL FACILITIES ENGINEERING SYSTEMS COMMAND
MID-ATLANTIC
NAVAL FACILITIES ENGINEERING SYSTEMS COMMAND - MID-ATLANTIC
NAVAL STATION - NORFOLK, VA
NAVAL SUBMARINE BASE NEW LONDON
GROTON, CONNECTICUT
P-1102 WEAPONS MAGAZINE & ORDNANCE OPERATIONS FACILITY
TYPE G MAGAZINE
DOOR DETAILS

SCALE: 3" = 1'-0"
EPROJECT NO.: 1667770
CONSTR. CONTR. NO.
NAVFAC DRAWING NO. 12894204
SHEET 52 OF 91
S-705

FILE NAME: C:\pw_workdir\dms003\jb2mhill_09050107\d1710459\S-705.dwg LAYOUT NAME: S-705 – DOOR DETAILS PLOTTED: Friday, June 13, 2025 – 9:55am USER: 09050107

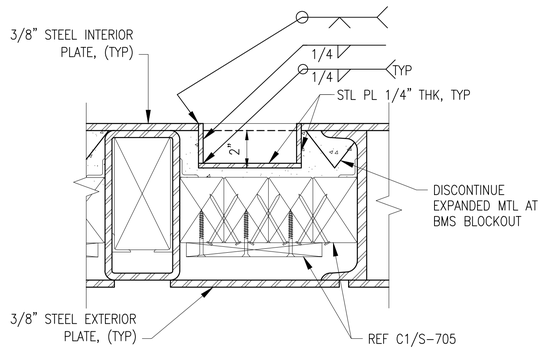

C1 BMS BLOCKOUT DETAIL
SCALE: 3" = 1'-0"

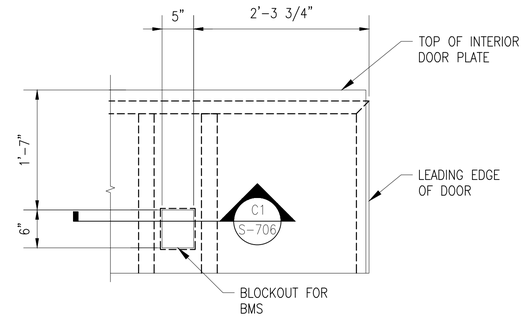

C3 BMS BLOCKOUT LOCATION
SCALE: 1" = 1'-0"

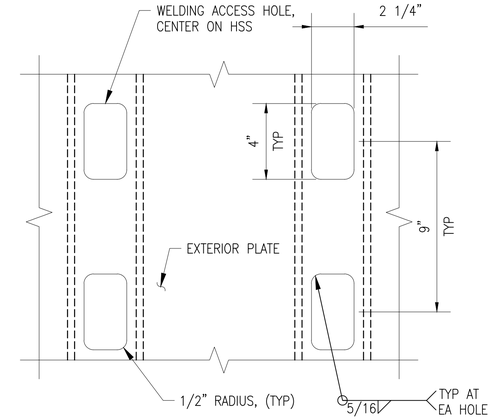

C4 EXTERIOR PLATE TO HSS STIFFENER CONNECTION
SCALE: 3" = 1'-0"

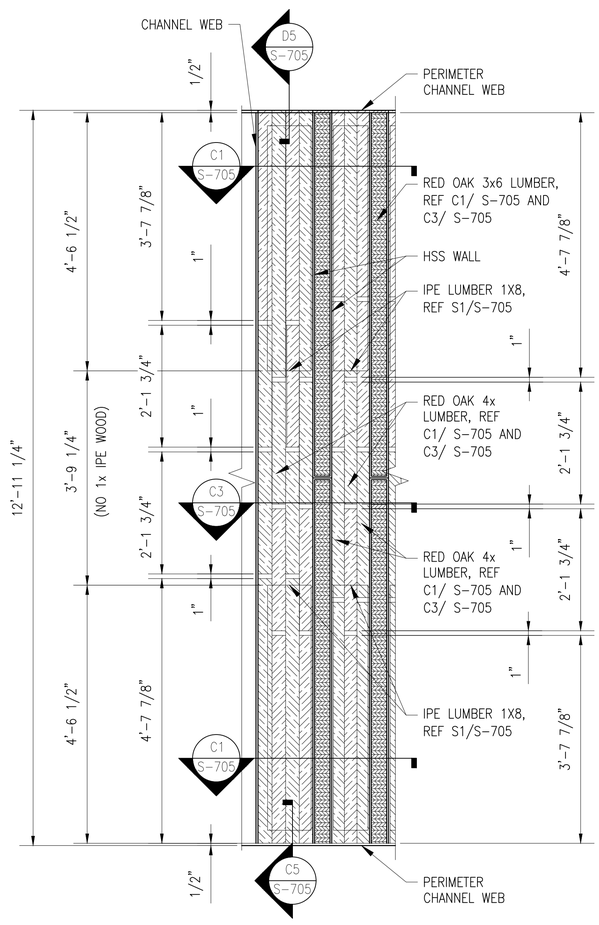

A1 ELEVATION - TYPICAL CONFIGURATION OF DOOR INFILL
SCALE: 3/4" = 1'-0"

THESE DRAWINGS ARE AN EXACT REPLICA OF THE STANDARD MAGAZINE TYPE "G" PROVIDED BY NAVFAC. THE DESIGN WILL BE SITE ADAPTED AND MODIFIED TO MEET THE SPECIFIC GEOTECHNICAL AND LOADING CONDITIONS SPECIFIC TO NAVAL SUBMARINE BASE NEW LONDON, GROTON, CONNECTICUT.

SYM	DESCRIPTION	DATE	APPR.

NAVFAC

SEAL

Jacobs
1100 NORTH GLEBE ROAD
SUITE 500
ARLINGTON, VIRGINIA 22201
571.218.1000
FAX: 571.218.1600

A/E INFO

APPROVED
FOR COMMANDER NAVFAC 8/14/2025
ACTIVITY
APPROVED BY LCDR ELIZABETH OLOKODE NAVFAC NLON FEAD DIRECTOR NEW LONDON, GROTON, CT
SATISFACTORY TO DATE 05/27/2025

DES FJ	DRW MR	CHK DW	
PM/DM	SMS/CWJ		
BRANCH MANAGER	NEK		
CHIEF ENG/ARCH	JWJ		
FIRE PROTECTION	HPN		

DEPARTMENT OF THE NAVY
NAVAL FACILITIES ENGINEERING SYSTEMS COMMAND
MID-ATLANTIC
NAVAL FACILITIES ENGINEERING SYSTEMS COMMAND - MID-ATLANTIC
NAVAL STATION - NORFOLK, VA
NAVAL SUBMARINE BASE NEW LONDON
GROTON, CONNECTICUT
P-1102 WEAPONS MAGAZINE & ORDNANCE OPERATIONS FACILITY
TYPE G MAGAZINE
DOOR DETAILS

SCALE: AS NOTED
EPROJECT NO.: 1667770
CONSTR. CONTR. NO.
NAVFAC DRAWING NO. 12894205
SHEET 53 OF 91
S-706

FILE NAME: C:\pw_workdir\dms003\ph2mhill_09050107\d1710459\S-706.dwg LAYOUT NAME: S-706 - DOOR DETAILS PLOTTED: Friday, June 13, 2025 - 9:55am USER: 09050107

THESE DRAWINGS ARE AN EXACT REPLICA OF THE STANDARD MAGAZINE TYPE "G" PROVIDED BY NAVFAC. THE DESIGN WILL BE SITE ADAPTED AND MODIFIED TO MEET THE SPECIFIC GEOTECHNICAL AND LOADING CONDITIONS SPECIFIC TO NAVAL SUBMARINE BASE NEW LONDON, GROTON, CONNECTICUT.

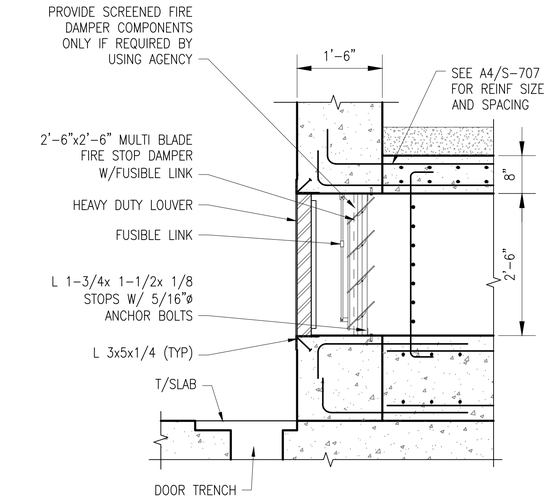

C2 SECTION
SCALE: 3/4" = 1'-0"

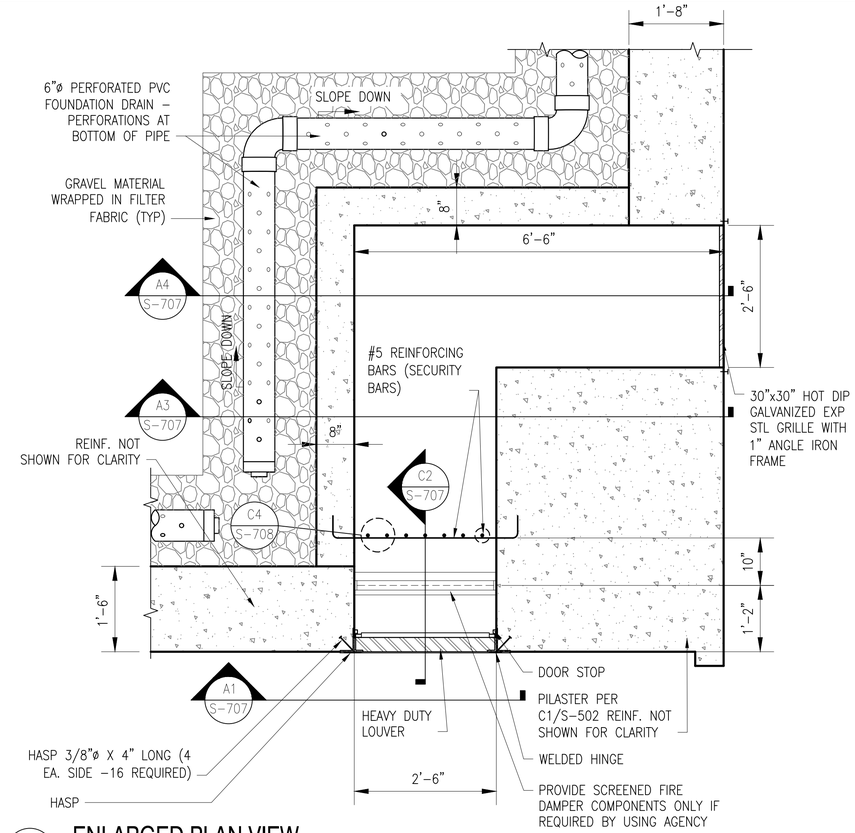

B4 ENLARGED PLAN VIEW
SCALE: 3/4" = 1'-0"

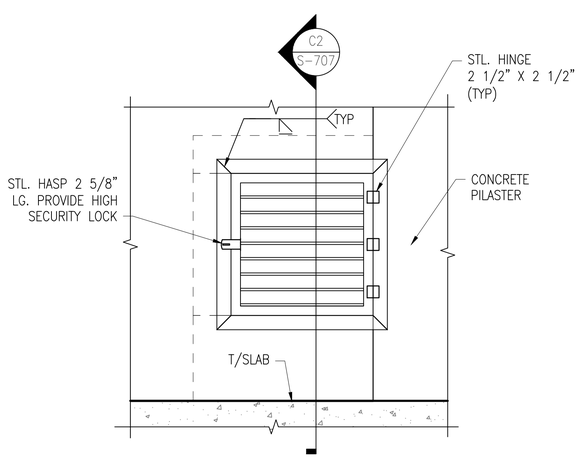

A1 SECTION
SCALE: 3/4" = 1'-0"

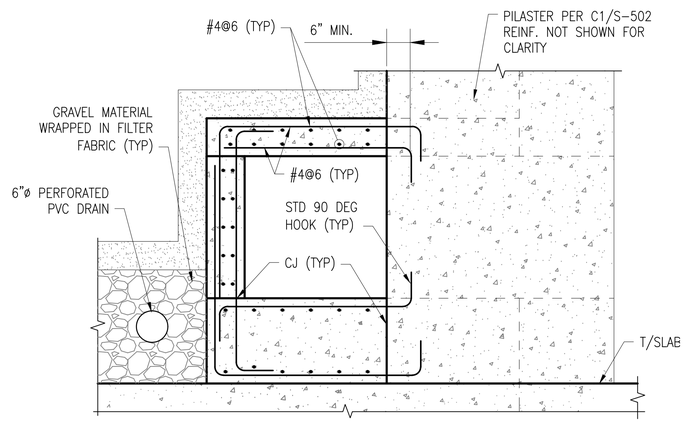

A3 SECTION
SCALE: 3/4" = 1'-0"

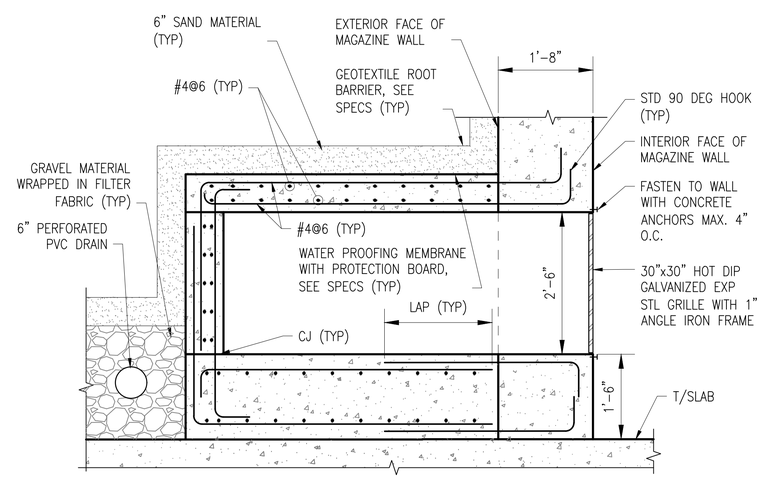

A4 SECTION
SCALE: 3/4" = 1'-0"

SYM	DESCRIPTION	DATE	APPR.

NAVFAC

Jacobs
1100 NORTH GLEBE ROAD
SUITE 500
ARLINGTON, VIRGINIA 22201
571.218.1000
FAX: 571.218.1600

A/E INFO

SEAL

APPROVED
FOR COMMANDER NAVFAC 8/14/2025

ACTIVITY
APPROVED BY LCDR ELIZABETH OLOKODE NAVFAC NLON FEAD DIRECTOR NEW LONDON, GROTON, CT

SATISFACTORY TO DATE 05/27/2025

DES	FJ	DRW	MR	CHK	DW
PM/DM	SMS/CWJ				
BRANCH MANAGER	NEK				
CHIEF ENG/ARCH	JWJ				
FIRE PROTECTION	HPN				

DEPARTMENT OF THE NAVY
NAVAL FACILITIES ENGINEERING SYSTEMS COMMAND
MID-ATLANTIC

NAVAL FACILITIES ENGINEERING SYSTEMS COMMAND - MID-ATLANTIC
NAVAL STATION - NORFOLK VA

NAVAL SUBMARINE BASE NEW LONDON
GROTON, CONNECTICUT

P-1102 WEAPONS MAGAZINE & ORDNANCE OPERATIONS FACILITY
TYPE G MAGAZINE

AIR INTAKE SECTIONS AND DETAILS

SCALE: 3/4" = 1'-0"
EPROJECT NO.: 1667770
CONSTR. CONTR. NO.
NAVFAC DRAWING NO. 12894206
SHEET 54 OF 91

S-707

FILE NAME: C:\pw_workdir\dem0033\ch2mhill_09050107\d1710459\S-707.dwg LAYOUT NAME: S-707 – AIR INTAKE SECTIONS AND DETAILS PLOTTED: Friday, June 13, 2025 – 9:56am USER: 09050107

THESE DRAWINGS ARE AN EXACT REPLICA OF THE STANDARD MAGAZINE TYPE "G" PROVIDED BY NAVFAC. THE DESIGN WILL BE SITE ADAPTED AND MODIFIED TO MEET THE SPECIFIC GEOTECHNICAL AND LOADING CONDITIONS SPECIFIC TO NAVAL SUBMARINE BASE NEW LONDON, GROTON, CONNECTICUT.

NOTES

1. PROVIDE SCREENED FIRE DAMPER COMPONENTS ONLY IF REQUIRED BY USING AGENCY.
2. ALL DAMPER AND SHAFT ASSEMBLIES MUST OPERATE FREELY AND POSITIVELY.
3. FUSIBLE LINKS MUST HAVE MELTING POINTS OF 160° TO 165° F. BREAKING STRENGTH MUST BE SUITABLE FOR LOADS IMPOSED BY COUNTERWEIGHTS.
4. ALL SET SCREWS & MACHINE SCREWS MUST BE STAINLESS STEEL.
5. VENTILATOR MUST BE DESIGNED FOR A SUSTAINED WIND SPEED OF 132 M.P.H.
6. REFER TO ELECTRICAL DRAWINGS FOR LIGHTNING ROD LOCATION ON VENTILATOR.
7. ALL MOVING PARTS MUST BE NON-SPARKING TYPE.
8. GRAVITY VENTILATOR MUST BE INTRINSICALLY SAFE.
9. BOND VENTILATOR TO GROUNDING SYSTEM. SEE ELECTRICAL DRAWINGS REQUIREMENTS.
10. CAP TOP OF SHAFT WITH GALVANIZED SHEET METAL WITH 2" RIGID BOARD INSULATION IN LIEU OF PROVIDING VENTILATOR WHERE A MECHANICAL HEATING AND / OR COOLING SYSTEM IS REQUIRED.
11. ALL COMPONENTS IN THIS SHEET INDICATED TO BE "SS" MUST BE TYPE 304 (NON-PASSIVATED) STAINLESS STEEL.

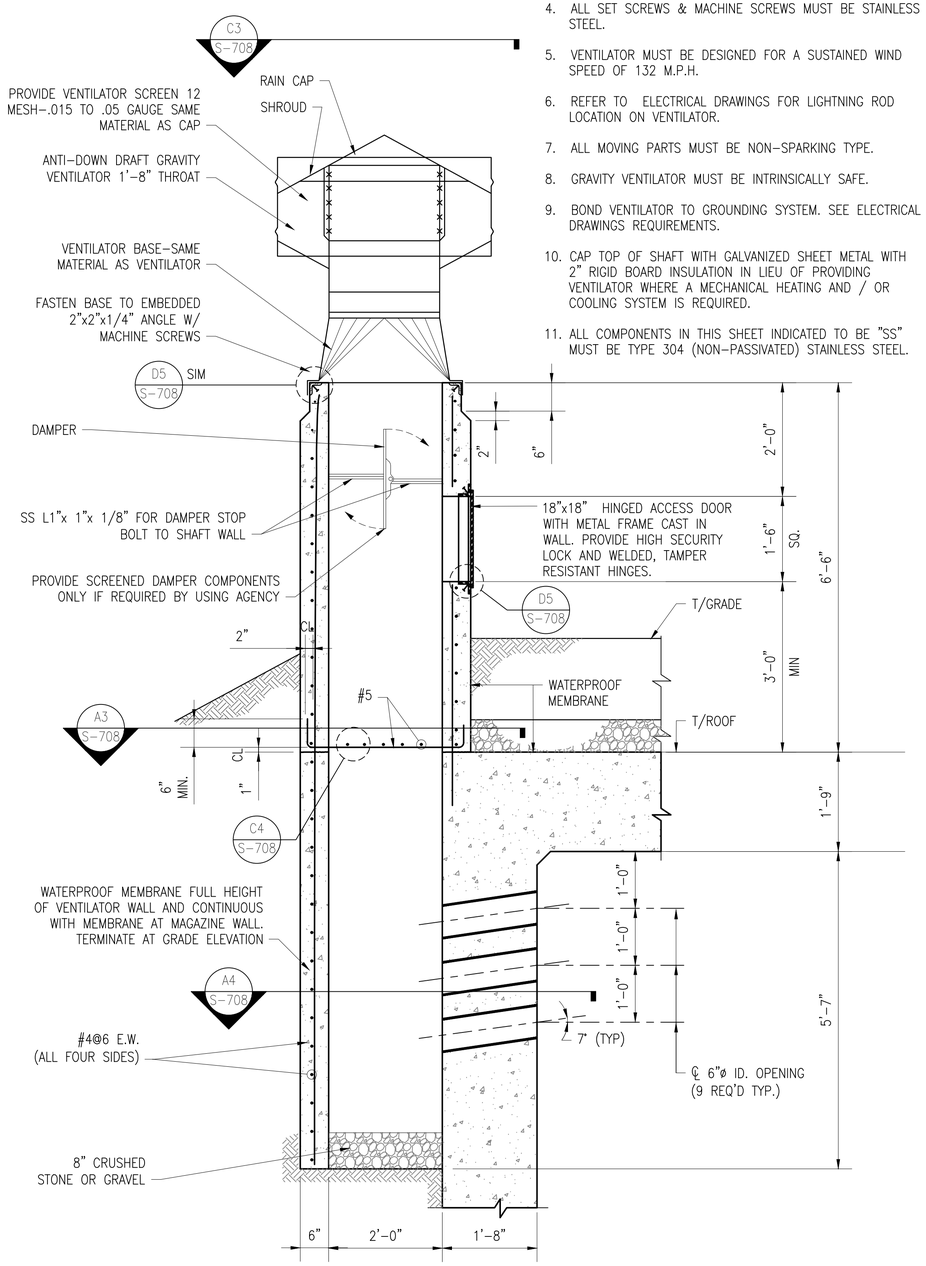

A1 SECTION AT VENTILATOR
SCALE: 3/4" = 1'-0"

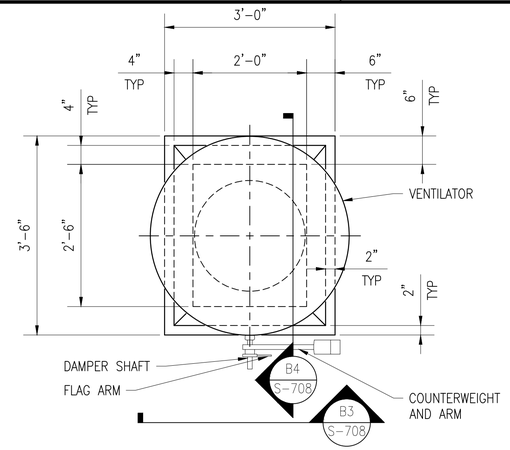

C3 DETAIL AT VENTILATOR
SCALE: 3/4" = 1'-0"

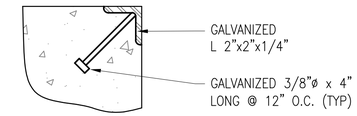

D4 DETAIL
SCALE: 3" = 1'-0"

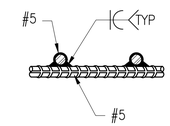

C4 DETAIL
SCALE: 3" = 1'-0"

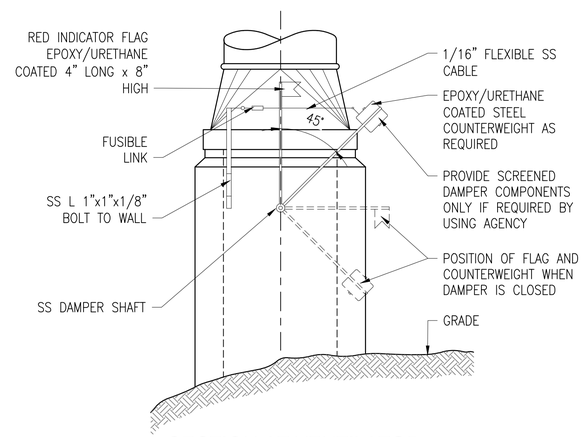

B3 SECTION AT VENTILATOR
SCALE: 3/4" = 1'-0"

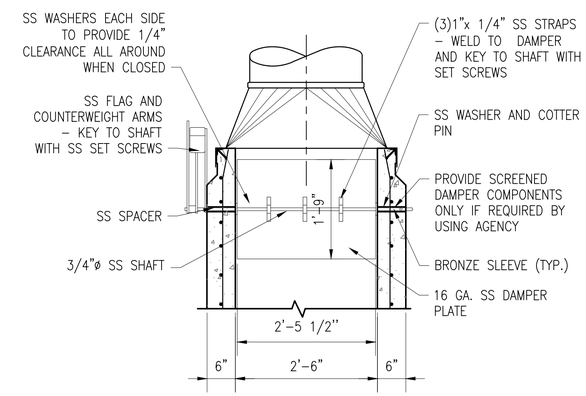

B4 SECTION AT VENTILATOR
SCALE: 3/4" = 1'-0"

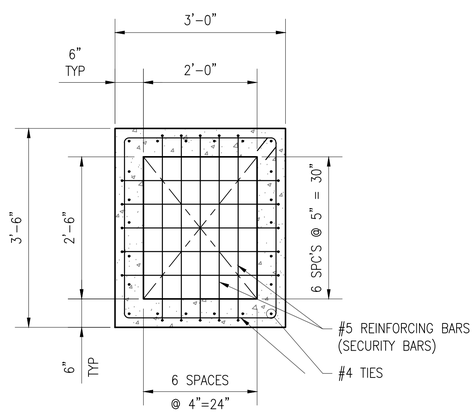

A3 SECTION AT VENTILATOR
SCALE: 3/4" = 1'-0"

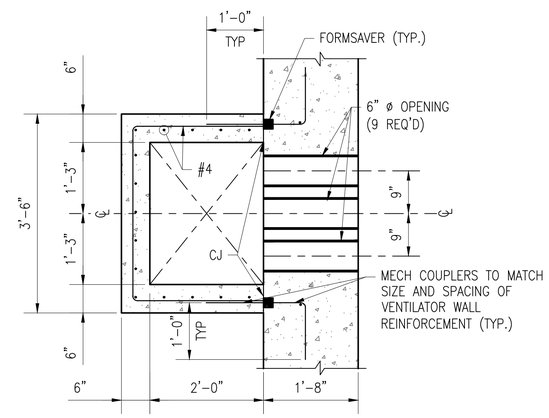

A4 SECTION AT VENTILATOR
SCALE: 3/4" = 1'-0"

STM	DESCRIPTION	DATE	APPR.

NAVFAC

SEAL

Jacobs
1100 NORTH GLEBE ROAD
SUITE 500
ARLINGTON, VIRGINIA 22201
571.218.1000
FAX: 571.218.1600

A/E INFO

APPROVED
FOR COMMANDER NAVFAC 8/14/2025
ACTIVITY
APPROVED BY LCDR ELIZABETH OLOKODE NAVFAC NLON FEAD DIRECTOR NEW LONDON, GROTON, CT
SATISFACTORY TO DATE 05/27/2025

DES	FJ	DRW	MR	CHK	DW
PM/DM	SMS/CWJ				
BRANCH MANAGER	NEK				
CHIEF ENG/ARCH	JWJ				
FIRE PROTECTION	HPN				

DEPARTMENT OF THE NAVY
NAVAL FACILITIES ENGINEERING SYSTEMS COMMAND
MID-ATLANTIC
NAVAL FACILITIES ENGINEERING SYSTEMS COMMAND - MID-ATLANTIC
NAVAL STATION - NORFOLK, VA
NAVAL SUBMARINE BASE NEW LONDON
GROTON, CONNECTICUT
P-1102 WEAPONS MAGAZINE & ORDNANCE OPERATIONS FACILITY
TYPE G MAGAZINE
VENTILATOR DETAILS, SECTIONS, AND ELEVATIONS

SCALE: AS NOTED
EPROJECT NO.: 1667770
CONSTR. CONTR. NO.
NAVFAC DRAWING NO.
12894207
SHEET 55 OF 91
S-708

FILE NAME: C:\pw_workdir\den003\js2mhill_09050107\d1710459\S-708.dwg LAYOUT NAME: S-708 - VENTILATOR DETAILS SECTIONS AND ELEVATIONS PLOTTED: Friday, June 13, 2025 - 9:56am USER: 09050107

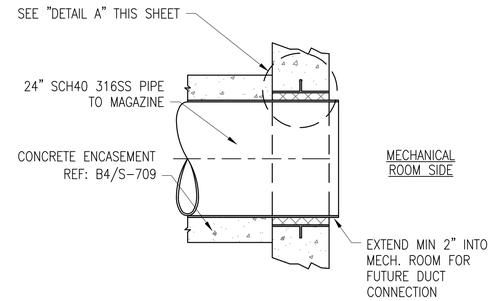

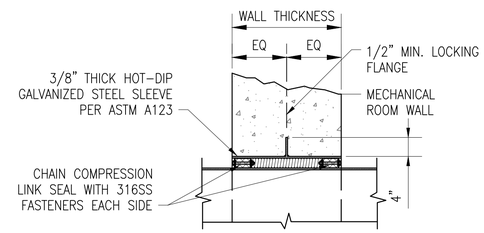

DETAIL A

NOTES:

1. THE NEED FOR A FIRE DAMPER AT MECHANICAL ROOM PENETRATIONS MUST BE DETERMINED BY THE SITE ADAPT ENGINEER.
2. ADJUST DESIGN TO INCORPORATE OUT-OF-WALL FIRE DAMPERS IF REQUIRED.
3. OUTER STEEL SLEEVE SIZE TO BE COORDINATED WITH CHAIN COMPRESSION LINK SEAL REQUIREMENTS.
4. INSTALL CONNECTING DUCTWORK AND FITTINGS IN ACCORDANCE WITH DUCTWORK MANUFACTURER'S RECOMMENDATIONS.
5. FILL VOID BETWEEN LINK SEALS WITH MINERAL WOOL.

B3 PIPE THRU MECH. ROOM WALL DETAIL

SCALE: 3/4" = 1'-0" 0 1' 2' 4'

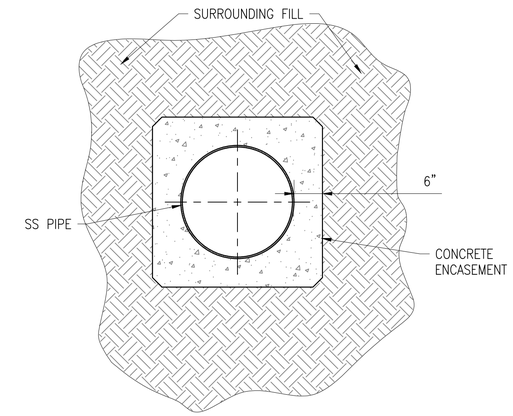

NOTES:

1. DUCTWORK INSTALLED UNDERGROUND MUST BE 24" DIAMETER SCH40 304SS PIPE.
2. TRENCHES MUST BE PITCHED TO PREVENT THE BUILDUP OF WATER AROUND THE PIPE OR WALL PENETRATIONS.
3. PIPE MUST BE TIED DOWN TO AVOID FLOATING DURING POURING OF CONCRETE ENCASEMENT.
4. CONCRETE MUST NOT BE POURED DIRECTLY ONTO THE PIPE. IT MUST BE POURED IN SUCCESSIVE LAYERS AND TAMPED FIRMLY AROUND THE PIPE.
5. FIELD APPLY BITUMEN COATING TO PIPE PRIOR TO CONCRETE ENCASEMENT.
6. CONCRETE ENCASEMENT TO BE MINIMUM OF 6" THICK.
7. WRAP CONCRETE ENCASED DUCTS IN WATERPROOFING MEMBRANE AND SEAL AGAINST ADJACENT MEMBRANE AT STRUCTURAL PENETRATION POINTS.

B4 CONCRETE ENCASED PIPE DETAIL

SCALE: 3/4" = 1'-0" 0 1' 2' 4'

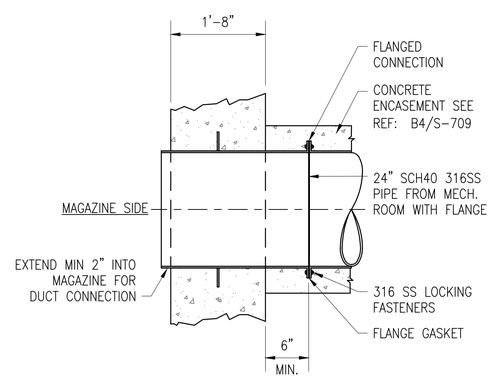

A3 PIPE THRU MAGAZINE WALL DETAIL

SCALE: 3/4" = 1'-0" 0 1' 2' 4'

THESE DRAWINGS ARE AN EXACT REPLICA OF THE STANDARD MAGAZINE TYPE "G" PROVIDED BY NAVFAC. THE DESIGN WILL BE SITE ADAPTED AND MODIFIED TO MEET THE SPECIFIC GEOTECHNICAL AND LOADING CONDITIONS SPECIFIC TO NAVAL SUBMARINE BASE NEW LONDON, GROTON, CONNECTICUT.

SYM	DESCRIPTION	DATE	APPR.

NAVFAC

SEAL

Jacobs
1100 NORTH GLEBE ROAD
SUITE 500
ARLINGTON, VIRGINIA 22201
571.218.1000
FAX: 571.218.1600

A/E INFO.

APPROVED
FOR COMMANDER NAVFAC 8/14/2025
ACTIVITY
APPROVED BY LCDR ELIZABETH OLOKODE NAVFAC NLON FEAD DIRECTOR NEW LONDON, GROTON, CT
SATISFACTORY TO DATE 05/27/2025

DES	FJ	DRW	MR	CHK	DW
PM/DM	SMS/CWJ				
BRANCH MANAGER	NEK				
CHIEF ENG/ARCH	JWJ				
FIRE PROTECTION	HPN				

DEPARTMENT OF THE NAVY
NAVAL FACILITIES ENGINEERING SYSTEMS COMMAND - MID-ATLANTIC
NAVAL FACILITIES ENGINEERING SYSTEMS COMMAND
MID-ATLANTIC
NAVAL STATION - NORFOLK, VA
NAVAL SUBMARINE BASE NEW LONDON
GROTON, CONNECTICUT
P-1102 WEAPONS MAGAZINE & ORDNANCE OPERATIONS FACILITY
TYPE G MAGAZINE
PENETRATION DETAILS

SCALE: 3/4" = 1'-0"
EPROJECT NO.: 1667770
CONSTR. CONTR. NO.
NAVFAC DRAWING NO. 12894208
SHEET 56 OF 91
S-709

FILE NAME: C:\pw_work\dir\dev003\jo2mhill_09050107\d1710459\S-709.dwg LAYOUT NAME: S-709 - PENETRATION DETAILS PLOTTED: Friday, June 13, 2025 - 9:56am USER: 09050107

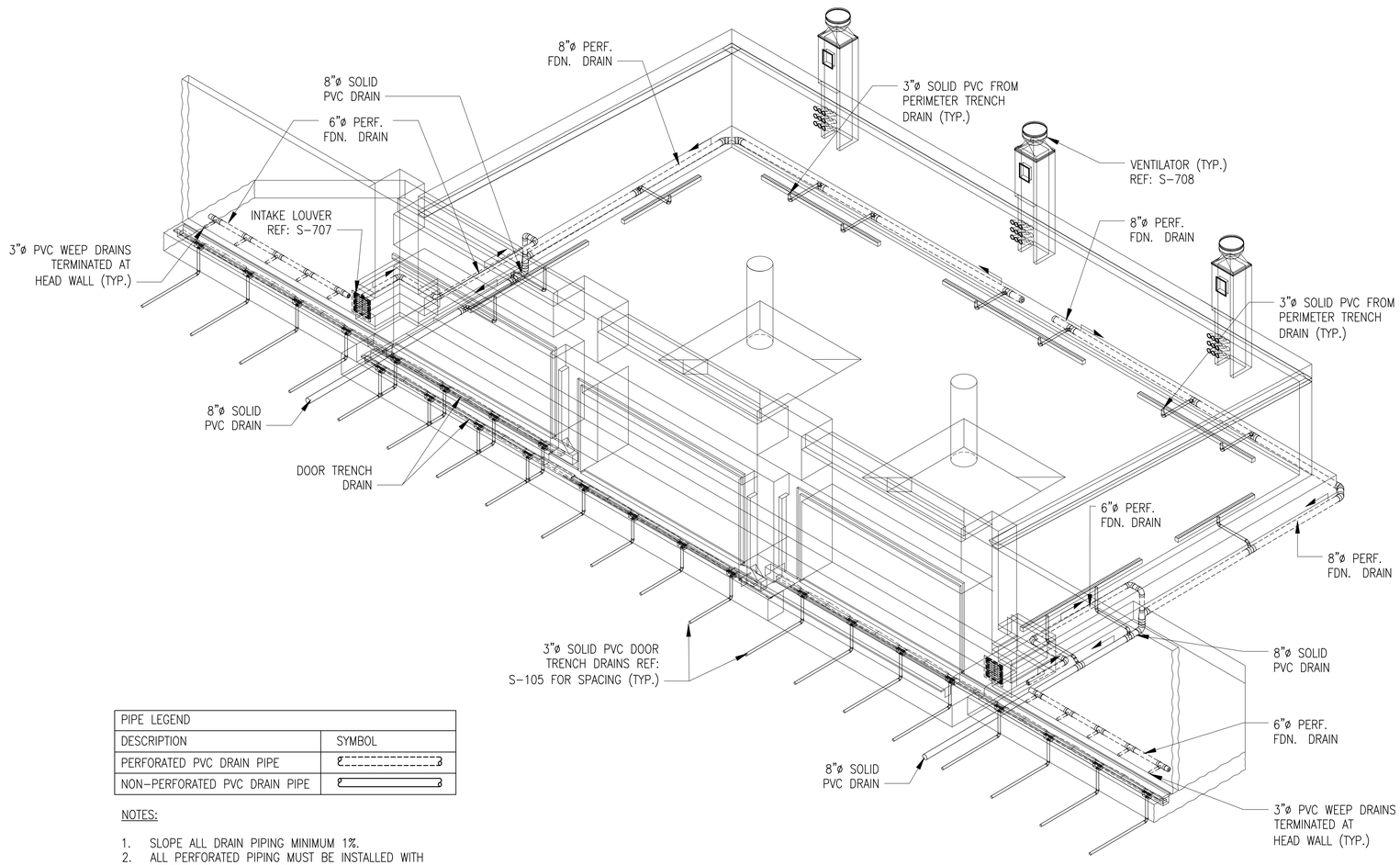

PIPE LEGEND	
DESCRIPTION	SYMBOL
PERFORATED PVC DRAIN PIPE	
NON-PERFORATED PVC DRAIN PIPE	

NOTES:

1. SLOPE ALL DRAIN PIPING MINIMUM 1%.
2. ALL PERFORATED PIPING MUST BE INSTALLED WITH PERFORATIONS FACING DOWN.

A1 DRAINAGE ISOMETRIC

NOT TO SCALE

THESE DRAWINGS HAVE BEEN ADAPTED FROM APPROVED NAVFAC MUNITIONS STORAGE CONSTRUCTION DOCUMENTS, NAVFAC DRAWING NUMBERS 14145656 TO 14145704, DATED 24 SEPT 2024. JACOBS DOR RESPONSIBILITY AND SEAL APPLICABILITY IS LIMITED TO THE SITE ADAPTATIONS AND MODIFICATIONS MADE TO THIS DRAWING.

SYM	DESCRIPTION	DATE	APPR.

SEAL

Jacobs
1100 NORTH GLEBE ROAD
SUITE 500
ARLINGTON, VIRGINIA 22201
571.218.1000
FAX: 571.218.1600

A/E INFO

APPROVED

FOR COMMANDER NAVFAC 8/14/2025

ACTIVITY
APPROVED BY LCDR ELIZABETH OLOKODE NAVFAC NLON FEAD DIRECTOR NEW LONDON, GROTON, CT

SATISFACTORY TO DATE 05/27/2025

DES FJ DRW MR CHK DW

PM/DM SMS/CWJ

BRANCH MANAGER NEK

CHIEF ENG/ARCH JVJ

FIRE PROTECTION HPN

DEPARTMENT OF THE NAVY
NAVAL FACILITIES ENGINEERING SYSTEMS COMMAND - MID-ATLANTIC
MID-ATLANTIC

NAVAL FACILITIES ENGINEERING SYSTEMS COMMAND
NAVAL STATION - NORFOLK, VA

NAVAL SUBMARINE BASE NEW LONDON
GROTON, CONNECTICUT
P-1102 WEAPONS MAGAZINE & ORDNANCE OPERATIONS FACILITY
TYPE G MAGAZINE

DRAINAGE ISOMETRIC

SCALE: NOT TO SCALE

EPROJECT NO.: 1667770

CONSTR. CONTR. NO.

NAVFAC DRAWING NO.
12894209

SHEET 57 OF 91

S-710S

FILE NAME: C:\pw_workdir\den0033\pb2mhill_09050107\d1710459\S-710S.dwg LAYOUT NAME: S-710S - DRAINAGE ISOMETRIC PLOTTED: Friday, June 13, 2025 - 9:57am USER: 09050107

PC	PHOTOCELL
OS	OCCUPANCY SENSOR – CEILING MOUNTED
OS	OCCUPANCY SENSOR – WALL MOUNTED
X Y Z	CEILING/PENDANT MOUNTED LUMINAIRE – COMPACT FLUORESCENT OR LED
X Y Z	WALL MOUNTED LUMINAIRE – COMPACT FLUORESCENT OR LED
X Y Z	CEILING/PENDANT MOUNTED LUMINAIRE – FLUORESCENT OR LED
X Y Z	WALL/SURFACE MOUNTED LUMINAIRE – FLUORESCENT OR LED
X Y Z	CEILING/PENDANT MOUNTED LUMINAIRE – COMPACT FLUORESCENT OR LED (NORMAL/EMERGENCY)
X Y Z	WALL MOUNTED LUMINAIRE – COMPACT FLUORESCENT OR LED (NORMAL/EMERGENCY)
X Y Z	CEILING/PENDANT MOUNTED LUMINAIRE – FLUORESCENT OR LED (NORMAL/EMERGENCY)
X Y Z	WALL/SURFACE MOUNTED LUMINAIRE – FLUORESCENT OR LED (NORMAL/EMERGENCY)
X Y Z	EMERGENCY LIGHT FIXTURE, 2 ATTACHED HEADS AS SHOWN
TC	TEMPERATURE CONTROL PANEL
SD	AUTOMATIC SNOW DETECTOR CONTROL PANEL
B	BYPASS SWITCH.
C	CONTACTOR
HS	HEAT SENSOR EMBEDDED IN PAVEMENT
CS	COLD SENSOR EMBEDDED IN PAVEMENT
P	HEAT TRACING POWER BOX

X 20A 3P OR X 100AF 80AT 3P	LOW – VOLTAGE CIRCUIT BREAKER (CB). RATINGS AND NO. OF POLES AS SHOWN. WHEN SPECIFIC TYPE IS REQUIRED, X INDICATES TYPE. TYPES: MCCB – MOLDED CASE ICCB – INSULATED CASE LVP – LOW – VOLTAGE POWER MCP – MOTOR CIRCUIT PROTECTOR (RATING PER CONNECTED LOAD)
CB	SEPARATELY MOUNTED CIRCUIT BREAKER; SEE ELECTRICAL ONE – LINE DIAGRAM OR SCHEDULE FOR DESCRIPTION
GFP	GROUND FAULT PROTECTION
	FUSE, SIZE, AND NUMBER OF FUSES AS NOTED
	FUSED CUTOUT, CURRENT RATING, FUSE SIZE, AND NUMBER OF POLES AS NOTED
	FUSIBLE SWITCH, CURRENT RATING, FUSE SIZE, AND QUANTITY AS NOTED
	NON–FUSED SWITCH, CURRENT RATING, AND NUMBER OF POLES AS NOTED
	DISCONNECT OR DRAWOUT CONNECTION
A B & A B	MAGNETIC MOTOR STARTER AND SEPARATELY MOUNTED COMBINATION MAGNETIC MOTOR STARTER
D & D	MOTOR CONTROLLER AND SEPARATELY MOUNTED MOTOR CONTROLLER WITH SHORT CIRCUIT PROTECTION AND DISCONNECT MOTOR STARTER AND CONTROLLER SUBSCRIPTS: A – MAGNETIC STARTER NEMA SIZE B – STARTER TYPE NONE – FULL VOLTAGE NON–REVERSING (FVNR) FVR – FULL VOLTAGE REVERSING 2S – TWO SPEED RVAT – REDUCED VOLTAGE AUTO TRANSFORMER C – CONTROL DIAGRAM OR CONTROLS SCHEDULE NUMBER (IF REQUIRED) D – CONTROLLER TYPE VFD – VARIABLE FREQUENCY DRIVE SS – SOLID STATE SSRV – SOLID STATE REDUCED VOLTAGE
OR	DISCONNECT OR SAFETY SWITCH, 30A, 3P, NON–FUSED UNLESS OTHERWISE NOTED
T	DISCONNECT OR SAFETY SWITCH WITH AUXILIARY CONTACTS, 30A, 3P, NON–FUSED UNLESS OTHERWISE NOTED
7 1/2 OR HP	MOTOR WITH DESIGN HORSEPOWER (WHEN INDICATED)
	MOTOR
	GENERATOR
ATS	TRANSFER SWITCH, CURRENT RATING, AND NUMBER OF POLES AS NOTED ATS – AUTOMATIC MTS – MANUAL
	TRANSFORMER Δ 3–PHASE, 3–WIRE DELTA CONNECTION Y 3–PHASE, 4–WIRE GROUNDED WYE CONNECTION
LP100 208/120V 3Ø,4W	SWITCHBOARD OR PANELBOARD; NAME, VOLTAGE, PHASE, NUMBER OF WIRES WHEN INDICATED

100 KVA	NON–MOTOR LOAD WITH DESIGN KVA, KW, OR AMP
CPT	CONTROL POWER TRANSFORMER (CPT)
	VOLTAGE TRANSFORMER (VT OR PT)
	CURRENT TRANSFORMER (CT)
WH	UTILITY WATT–HOUR METER PER UTILITY REQUIREMENTS
DMP	DIGITAL METERING PACKAGE
RTM	RUN TIME METER
	GROUND
	LIGHTNING ARRESTER
SPD	LOW VOLTAGE SURGE PROTECTIVE DEVICE
	ELECTRICAL CONNECTION
OR	NO ELECTRICAL CONNECTION
X Y	CONTROL/RELAY COIL; X INDICATES TYPE, Y INDICATES LOOP NO. WHEN USED TYPES: CR – CONTROL RELAY DP – DEFINITE PURPOSE RELAY LC – LIGHTING CONTACTOR M – MOTOR STARTER PC – PHOTO CELL TC – TIME CLOCK TR – TIMING RELAY
	NORMALLY OPEN CONTACT (N.O.)
	NORMALLY CLOSED CONTACT (N.C.)
OFF HAND AUTO XOO OOX	3 POSITION SELECTOR SWITCH, MAINTAINED CONTACTS; UNLESS OTHERWISE NOTED, 2–POSITION SIMILAR
	NORMALLY OPEN PUSHBUTTON, MOMENTARY CONTACT UNLESS OTHERWISE NOTED
	NORMALLY CLOSED PUSHBUTTON, MOMENTARY CONTACT UNLESS OTHERWISE NOTED
T	TRANSFORMER
PB	PUSHBUTTON
	SPECIAL PURPOSE DEVICE
	CONTROL PANEL INTEGRAL OR PROVIDED WITH ASSOCIATED EQUIPMENT
	CONTROL PANEL WITH DISCONNECT SWITCH INTEGRAL OR PROVIDED WITH ASSOCIATED EQUIPMENT
	JUNCTION OR PULL BOX
	EQUIPMENT CONNECTION
	ELECTRICAL EQUIPMENT ENCLOSURE: PANELBOARD, SWITCHBOARD, MOTOR CONTROL CENTER, CONTROL PANEL, OR OTHER EQUIPMENT AS INDICATED
	480/277V PANELBOARD
	208/120V PANELBOARD

THESE DRAWINGS HAVE BEEN ADAPTED FROM APPROVED NAVFAC MUNITIONS STORAGE CONSTRUCTION DOCUMENTS, NAVFAC DRAWING NUMBERS 14145654 TO 14145739, APPROVED BY DDESB ON 24 SEPT 2024. JACOBS DOR RESPONSIBILITY AND SEAL APPLICABILITY IS LIMITED TO THE SITE ADAPTATIONS AND MODIFICATIONS MADE TO THIS DRAWING.

ORIGINAL STANDARD DRAWING IS NAVFAC DRAWING NUMBER 14145705 SHT 52 OF 86

SYM	DESCRIPTION	DATE	APPR.

NAVFAC

COMMONWEALTH OF VIRGINIA
KELLEY BOURASSA
LIC. NO. 0402061759
6/23/2025
PROFESSIONAL ENGINEER
SEAL

Jacobs
1100 NORTH GLEBE ROAD
SUITE 500
ARLINGTON, VIRGINIA 22201
571.218.1000
FAX: 571.218.1600
A/E INFO

APPROVED
FOR COMMANDER NAVFAC 8/14/2025

ACTIVITY
APPROVED BY LCDR ELIZABETH OLOKODE NAVFAC NLON FEAD DIRECTOR NEW LONDON, GROTON, CT
SATISFACTORY TO DATE 05/27/2025

DES	JP	DRW	JP
CHK	KB	PM/DM	SMS/CWJ
BRANCH MANAGER	WRB	CHIEF ENG/ARCH	JWJ
FIRE PROTECTION	HPN		

DEPARTMENT OF THE NAVY
NAVAL FACILITIES ENGINEERING SYSTEMS COMMAND
MID-ATLANTIC
NAVAL FACILITIES ENGINEERING SYSTEMS COMMAND - MID-ATLANTIC
NAVAL STATION - NORFOLK, VA
NAVAL SUBMARINE BASE NEW LONDON
GROTON, CONNECTICUT
P-1102 WEAPONS MAGAZINE & ORDNANCE OPERATIONS FACILITY
TYPE G MAGAZINE

ELECTRICAL SYMBOLS & LEGEND - SITE ADAPTED

SCALE: NONE
EPROJECT NO.: 1667770
CONSTR. CONTR. NO.
NAVFAC DRAWING NO. 12894210
SHEET 58 OF 91

E-001S

E-001S.dwg
FDZE1628

FILE NAME: C:\pw_workdir\den003\jwj_philliph\d1711378\E-001S.dwg LAYOUT NAME: E-001 – ELECTRICAL SYMBOLS & LEGEND PLOTTED: Thursday, June 12, 2025 – 11:45am USER: PHILLIH

DOUBLE-FACED CEILING OR WALL MOUNTED EXIT LIGHT; DIRECTIONAL ARROWS (IF REQUIRED) AS INDICATED ON PLANS

SINGLE-FACED CEILING OR WALL MOUNTED EXIT LIGHT; DIRECTIONAL ARROWS (IF REQUIRED) AS INDICATED ON PLANS

LIGHTING FIXTURE SUBSCRIPTS:

X – INDICATES FIXTURE TYPE PER LIGHTING FIXTURE SCHEDULE
Y – INDICATES CIRCUIT NUMBER FROM PANELBOARD
z – INDICATES CONTROLLING SWITCH (IF REQUIRED)

TOGGLE SWITCH

SUBSCRIPTS:

X – INDICATES TYPE
NONE – SINGLE POLE
3 – THREE-WAY
4 – FOUR-WAY
M – TOGGLE SWITCH, HORSEPOWER RATED
K – KEY SWITCH
TE – MANUAL MOTOR STARTER WITH THERMAL ELEMENT
P – PILOT LIGHT
L – LIGHTED HANDLE
Y – INDICATES CONTROLLING SWITCH (IF REQUIRED)
WP – WEATHER PROOF
DS – 0-10V DIMMING
OS – DUAL TECH OCCUPANCY SENSOR

SPECIAL-PURPOSE RECEPTACLE AS DEFINED ON PLANS

QUAD-DUPLEX RECEPTACLE, TWO NEMA 5-20R UNDER COMMON COVER PLATE

DUPLEX RECEPTACLE, NEMA 5-20R

SIMPLEX RECEPTACLE, NEMA 5-20R

RECEPTACLE IN FLOOR BOX

SUBSCRIPTS:

X – INDICATES TYPE
GFCI – GROUND FAULT CIRCUIT INTERRUPTER
WP – WEATHER PROOF
C – CONTROLLED RECEPTACLE, MARKING PER NEC 406.3(E), GREEN
Y – INDICATES CIRCUIT NUMBER FROM PANELBOARD

SPECIAL DEVICE AND/OR CONNECTION AS NOTED

CONDUIT TURNING UP

CONDUIT TURNING DOWN

HOME RUN TO PANEL, 2 #12, 1 #12G IN 3/4"C UNLESS OTHERWISE NOTED

CIRCUIT RUN BETWEEN DEVICES EXPOSED IN NON-ARCHITECTURALLY FINISHED AREAS; CONCEALED IN ARCHITECTURALLY FINISHED AREAS. CONDUIT AND CONDUCTOR SIZES MUST BE THE SAME AS THE HOMERUN FOR THE CIRCUIT.

CONDUIT RUN BETWEEN DEVICES CONCEALED IN NON-ARCHITECTURALLY FINISHED AREAS OR UNDER FLOOR SLAB. CONDUIT AND CONDUCTOR SIZES MUST BE THE SAME AS THE HOMERUN FOR THE CIRCUIT.

UNDERGROUND CONDUIT

CIRCUIT CONTINUATION

CONDUIT STUBBED OUT AND CAPPED

G — GROUNDING CONDUCTOR

E — UNDERGROUND ELECTRICAL DUCT BANK

C — UNDERGROUND COMMUNICATIONS CONCRETE ENCASED DUCT BANK

OHE — OVERHEAD SECONDARY CIRCUIT AND CONDUCTORS

EE — DIRECT BURIED CONDUIT

PILASTER GROUNDING CONDUCTOR

GROUND ROD

GROUND TEST WELL

XX — HH: HANDHOLE
MH: MANHOLE

AIR TERMINAL

GROUND CONNECTION

ELECTRICAL ABBREVIATIONS

A	AMPERES OR TRIP AMPERES
AC	ALTERNATING CURRENT
AFF	ABOVE FINISHED FLOOR
AFG	ABOVE FINISHED GRADE
AIC	SYMMETRICAL AMPS INTERRUPTING CAPACITY
AWG	AMERICAN WIRE GAUGE
A/R	AS REQUIRED
ARR.	ARRESTOR
BLDG	BUILDING
BRKT	BRACKET
C	CONDUIT
CB	CIRCUIT BREAKER
CKT	CIRCUIT
CL	CURRENT LIMITING
CO	CONDUIT ONLY
CTL	CONTROL
DC	DIRECT CURRENT
D.T.C.	DATA TERMINAL CABINET
EMCS	ENERGY MONITORING AND CONTROL SYSTEM
FACP	FIRE ALARM CONTROL PANEL
FT	FOOT, FEET
GFCI	GROUND FAULT CIRCUIT INTERRUPTER, 5MA PERSONNEL PROTECTION UNLESS OTHERWISE NOTED.
GND	GROUND
HZ	HERTZ
IAW	IN ACCORDANCE WITH
IG	ISOLATED GROUND
IN	INCH, INCHES
IR	INFRARED
KV	KILOVOLTS
KVA	KILOVOLT AMPERES
KVAR	KILOVOLT AMPS REACTIVE
KWH	KILOWATT HOURS
L-L	LINE TO LINE
L-N	LINE TO NEUTRAL
MFR	MANUFACTURER
MH	MANHOLE
MIN	MINIMUM
MTD	MOUNTED
MTG	MOUNTING
NAFSEA	NAVAL SEA SYSTEMS COMMAND
N.C.	NORMALLY CLOSED
NEC	NATIONAL ELECTRICAL CODE
NEMA	NATIONAL ELECTRICAL MANUFACTURERS ASSOCIATION
NEUT	NEUTRAL
NOSSA	NAVAL ORDNANCE SAFETY & SECURITY ACTIVITY
N.O.	NORMALLY OPEN
NLT	NOT LESS THAN
NMT	NOT MORE THAN
OH	OVERHEAD
PAS	PUBLIC ADDRESS SYSTEM
PE	PHOTOELECTRIC
PH	PHASE
PLCS	PLACES
PNL	PANELBOARD
PVC	POLYVINYL CHLORIDE ELECTRICAL RACEWAY USED ONLY U.G., CARLON OR EQUIVALENT
RC	RIGID STEEL CONDUIT
REF	REFERENCE
REQ'D	REQUIRED
RGC	RIGID GALVANIZED STEEL CONDUIT
RM	ROOM
RMC	RIGID METALIC CONDUIT
SHT	SHEET
SOB	STANDOFF BRACKET
SPACE	SPACE(S) ONLY (NO BREAKER DEVICE)
SPARE	SPARE BREAKER OR DEVICE
SPDT	SINGLE-POLE, DOUBLE-THROW
SPECS	CONTRACT SPECIFICATIONS
SPST	SINGLE-POLE, SINGLE-THROW
S/N	SOLID NEUTRAL
TB	TELEPHONE BACKBOARD
TYP	TYPICAL
UG	UNDERGROUND
UL	LISTED BY UNDERWRITER'S LABORATORIES
UON	UNLESS OTHERWISE NOTED
V	VOLTS
VA	VOLT AMPERES
W	WATT
WH	WEATHERHEAD
W/	WITH
ø	PHASE
2W+G	CIRCUIT TYPE
3W+G	CIRCUIT TYPE
4W+G	CIRCUIT TYPE

1. THIS IS A STANDARD ELECTRICAL SYMBOLOGY SHEET. NOT ALL SYMBOLS MAY BE USED ON THIS PROJECT.

2. SCREENING OR SHADING OF WORK IS TO DE-EMPHASIZE PROPOSED IMPROVEMENTS TO HIGHLIGHT SELECTED TRADE WORK. REFER TO CONTEXT OF EACH SHEET FOR USAGE.

GENERAL NOTES:

1. PROJECT DESIGN AND EXECUTION MUST CONFORM TO THE LATEST VERSIONS OF:
(A) NFPA 70 (NATIONAL ELECTRICAL CODE)
(B) NESC (NATIONAL ELECTRICAL SAFETY CODE)
(C) NFPA 101 (LIFE SAFETY CODE)
(D) NFPA 780 (STANDARD FOR INSTALLATION OF LIGHTNING PROTECTION SYSTEM)
(E) NAVSEA OP 5 (AMMUNITIONS AND EXPLOSIVES SAFETY ASHORES)
(F) APPLICABLE LOCAL, STATE AND FEDERAL CODES.

2. CONTRACTOR MUST COORDINATE FINAL LOCATION OF ELECTRICAL EQUIPMENT AND COMPONENTS WITH ALL OTHER TRADES PRIOR INSTALLATION. THE CONTRACTOR MUST BE RESPONSIBLE FOR SECURING SPACE REQUIREMENTS FOR ELECTRICAL EQUIPMENT CLEARANCE AND CORRECT ROUGH-IN LOCATIONS OF ELECTRICAL CONNECTIONS.

3. DRAWINGS ARE IN GENERAL DIAGRAMMATIC IN NATURE. FIELD ADJUST CONDUIT AND TRAY ROUTING BASED ON COORDINATION WITH OTHER NEW UTILITIES, STRUCTURES AND EQUIPMENT. NOT ALL COMPONENTS, CONDUITS, AND EQUIPMENT ARE SHOWN IN ALL VIEWS. THE CONTRACTOR MUST MAKE USE OF THE ENTIRE SET OF DRAWINGS, REQUIREMENTS, AND SPECIFICATIONS IN ORDER TO INCLUDE ALL COMPONENTS NECESSARY TO CONSTRUCT A FULLY OPERATIONAL SYSTEM.

4. ALL EQUIPMENT MUST BE INSTALLED IN ACCORDANCE WITH MANUFACTURER'S APPROVED, PUBLISHED LITERATURE.

5. ALL UTILITY SERVICES SUCH AS ELECTRIC, TELECOM, SECURITY, INTRUSION DETECTION SYSTEM, FIRE ALARM SYSTEM MUST BE ROUTED UNDERGROUND AT MINIMUM OF 50-FEET AWAY FROM BUILDING FOR SERVICE CONNECTION.

6. ALL CONDUITS MUST BE A RIGID GALVANIZED STEEL CONDUIT (RGS) OR LIQUID-TIGHT, METAL FLEXIBLE CONDUIT. CONDUIT PENETRATIONS THROUGH CONCRETE MUST BE PVC-COATED RIGID GALVANIZED STEEL CONDUIT (PVC-RGS) THROUGH THE LENGTH OF THE PENETRATION, WITH 3" TO 6" AT BOTH PENETRATION ENDS FOR CLEARANCE. CONDUITS PENETRATING UNDERNEATH FOUNDATION IS PROHIBITED. CONDUIT ELBOW PLACEMENT MUST CONSIDER THIS CLEARANCE DURING DESIGN AND INSTALLATION.

7. PROVIDE AND INSTALL THW OR THWN INSULATED CONDUCTORS WITH MINIMUM OF #12 AWG, STRANDED COPPER.

8. ALL NEMA ENCLOSURE RATINGS INDICATED ON DOCUMENTS MAY BE REVISED AS REQUIRED BY THE ENVIRONMENTAL CONDITIONS DURING SITE ADAPTATION PROJECTS.

9. THE CONSTRUCTION DOCUMENTS ARE DESIGN CONSTRUCTION STANDARDS FOR STANDARD MAGAZINES, CONTRACTOR MUST COORDINATE SITE ADAPTATIONS FOR ADDITIONAL DESIGN REQUIREMENTS.

10. PROVIDE SURGE PROTECTION FOR ALL CONDUCTORS (ENTERING AND EXITING THE MAGAZINE) IN ACCORDANCE WITH NFPA 780 AND OP-5. CONNECT ALL SURGE PROTECTION GROUNDING CONDUCTORS TO THE SECONDARY GROUND RING. SURGE SUPPRESSION EQUIPMENT MUST BE INSTALLED INSIDE OR OUTSIDE THE FACILITY AS NEAR TO THE PENETRATION POINT AS IS PRACTICAL.

11. BONDING TO STRUCTURAL CONCRETE REINFORCEMENT BY THERMAL MEANS IS NOT ALLOWED.

12. WELDING OF REINFORCEMENT IS NOT ALLOWED WITHOUT THE CONTRACTING OFFICER'S APPROVAL.

13. FOR LIGHTNING PROTECTION SYSTEM BONDING LOCATED ABOVE GROUND OR CONCEALED IN CONCRETE, ONLY HIGH COMPRESSION CRIMPS ARE ALLOWED.

14. PROVIDE TESTING PROCEDURES, TEST PRINTS, TEST SHEETS, ETC. FOR LIGHTNING PROTECTION AND GROUNDING SYSTEMS PER THE REQUIREMENTS IN OP-5.

THESE DRAWINGS HAVE BEEN ADAPTED FROM APPROVED NAVFAC MUNITIONS STORAGE CONSTRUCTION DOCUMENTS, NAVFAC DRAWING NUMBERS 14145654 TO 14145739, APPROVED BY DDESB ON 24 SEPT 2024. JACOBS DOR RESPONSIBILITY AND SEAL APPLICABILITY IS LIMITED TO THE SITE ADAPTATIONS AND MODIFICATIONS MADE TO THIS DRAWING.

ORIGINAL STANDARD DRAWING IS NAVFAC DRAWING NUMBER 14145706 SHT 53 OF 86

SYM	DESCRIPTION	DATE	APPR.

NAVFAC

COMMONWEALTH OF VIRGINIA
KELLEY BOURASSA
LIC. NO. 0402061759
6/23/2025
PROFESSIONAL ENGINEER
SEAL

Jacobs
1100 NORTH GLEBE ROAD
SUITE 500
ARLINGTON, VIRGINIA 22201
571.218.1000
FAX: 571.218.1600

A/E INFO

APPROVED
FOR COMMANDER NAVFAC 8/14/2025

ACTIVITY
APPROVED BY LCDR ELIZABETH OLOKODE NAVFAC NLON FEAD DIRECTOR NEW LONDON, GROTON, CT

SATISFACTORY TO DATE 05/27/2025

DES	JP	DRW	JP
CHK	KB		
PM/DM	SMS/CWJ		
BRANCH MANAGER	WRB		
CHIEF ENG/ARCH	JWJ		
FIRE PROTECTION	HPN		

DEPARTMENT OF THE NAVY
NAVAL FACILITIES ENGINEERING SYSTEMS COMMAND
MID-ATLANTIC
NAVAL FACILITIES ENGINEERING SYSTEMS COMMAND - MID-ATLANTIC
NAVAL STATION - NORFOLK, VA
NAVAL SUBMARINE BASE NEW LONDON
GROTON, CONNECTICUT
P-1102 WEAPONS MAGAZINE & ORDNANCE OPERATIONS FACILITY
TYPE G MAGAZINE

ELECTRICAL SYMBOLS & LEGEND - SITE ADAPTED

SCALE: NONE
EPROJECT NO.: 1667770
CONSTR. CONTR. NO.
NAVFAC DRAWING NO. 12894211
SHEET 59 OF 91
E-002S

FILE NAME: C:\pw_work\pw\dev0035\proj_phillip\d1711378\E-002S.dwg LAYOUT NAME: E-002 – ELECTRICAL SYMBOLS & LEGEND PLOTTED: Thursday, June 12, 2025 – 11:45am USER: PHILLIJH

E-002S.dwg

FDZE1628

THESE DRAWINGS HAVE BEEN ADAPTED FROM APPROVED NAVFAC MUNITIONS STORAGE CONSTRUCTION DOCUMENTS, NAVFAC DRAWING NUMBERS 14145654 TO 14145739, APPROVED BY DDESB ON 24 SEPT 2024. JACOBS DOR RESPONSIBILITY AND SEAL APPLICABILITY IS LIMITED TO THE SITE ADAPTATIONS AND MODIFICATIONS MADE TO THIS DRAWING.

ORIGINAL STANDARD DRAWING IS NAVFAC DRAWING NUMBER 14145707 SHT 54 OF 86

SEE SHEET EG102S FOR SHEET AND KEYED NOTES.

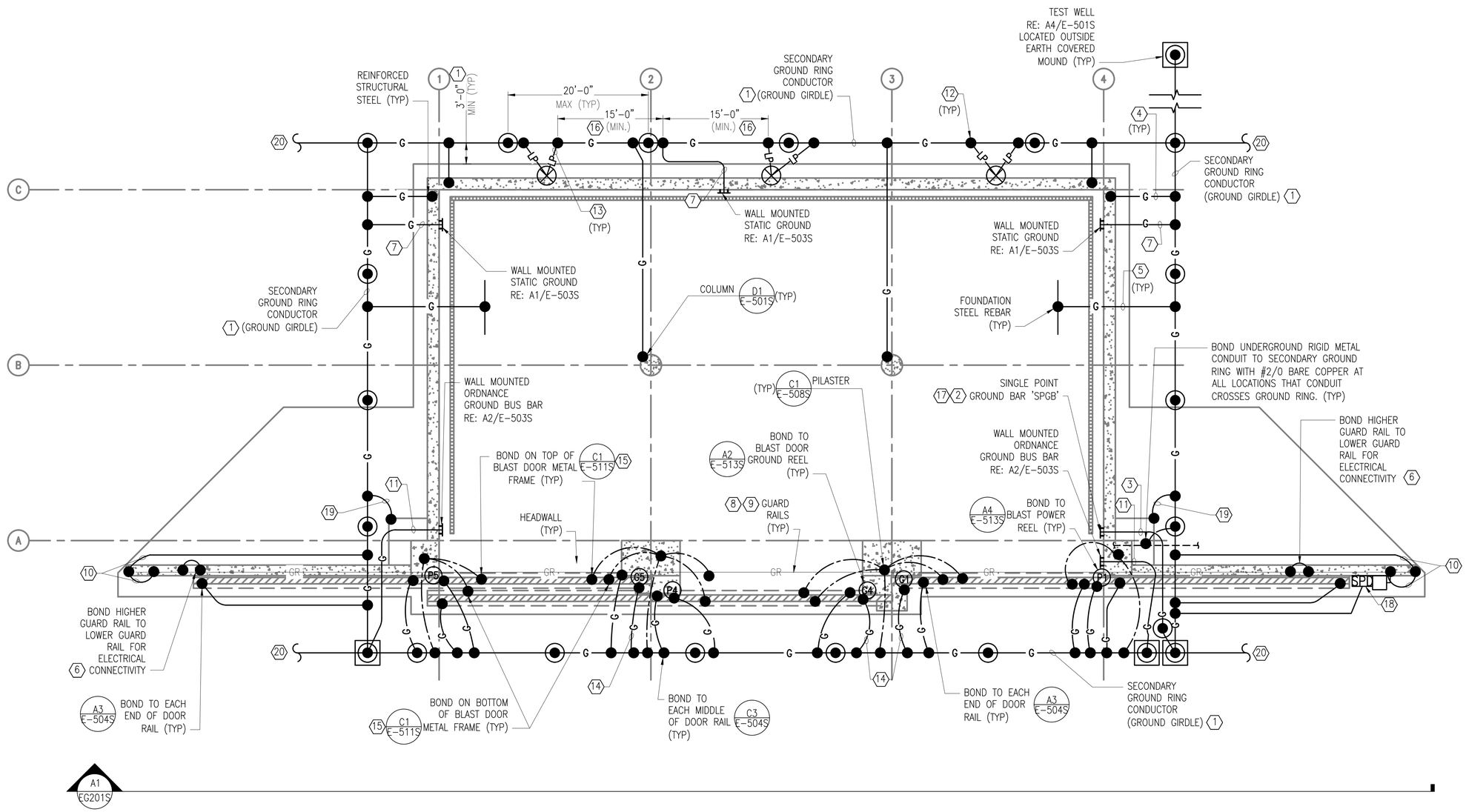

A1 ELECTRICAL LIGHTNING PROTECTION & GROUNDING PLAN

SCALE: 1/8" = 1'-0"

0 4' 8' 16'

PLAN NORTH

						APPR.
						DATE
						DESCRIPTION
						SYM

NAVFAC

COMMONWEALTH OF VIRGINIA
KELLEY BOURASSA
Lic. No. 040206175 9
6/23/2025
PROFESSIONAL ENGINEER
SEAL

Jacobs
1100 NORTH GLEBE ROAD
SUITE 500
ARLINGTON, VIRGINIA 22201
571.218.1000
FAX: 571.218.1600
A/E INFO

APPROVED
FOR COMMANDER NAVFAC 8/14/2025

ACTIVITY
APPROVED BY LCDR ELIZABETH OLOKODE NAVFAC NLON FEAD DIRECTOR NEW LONDON, GROTON, CT
SATISFACTORY TO DATE 05/27/2025

DES	JP	DRW	JP	CHK	KB
PM/DM					SMS/CWJ
BRANCH MANAGER					WRB
CHIEF ENG/ARCH					JWJ
FIRE PROTECTION					HPN

DEPARTMENT OF THE NAVY
NAVAL FACILITIES ENGINEERING SYSTEMS COMMAND
MID-ATLANTIC
NAVAL FACILITIES ENGINEERING SYSTEMS COMMAND - MID-ATLANTIC
NAVAL STATION - NORFOLK, VA
NAVAL SUBMARINE BASE NEW LONDON
GROTON, CONNECTICUT
P-1102 WEAPONS MAGAZINE & ORDNANCE OPERATIONS FACILITY
TYPE G MAGAZINE

ELECTRICAL GROUNDING PLAN – SITE ADAPTED

SCALE:	AS SHOWN
EPROJECT NO.:	1667770
CONSTR. CONTR. NO.	
NAVFAC DRAWING NO.	12894212
SHEET	60 OF 91

EG101S

FDZE1628 EG101S.dwg

FILE NAME: C:\pw_work\dir\jdem003\jeg_phillijh\d1711378\EG101S.dwg LAYOUT NAME: EG101 – ELECTRICAL GROUNDING PLAN PLOTTED: Thursday, June 12, 2025 – 12:50pm USER: PHILLIJH

SHEET NOTES

1. THE TERM 'LIGHTNING PROTECTION SYSTEM' MUST BE REFERRED TO AS 'LPS' HENCEFORTH.

2. THE STANDARD DESIGN DRAWINGS FOR LPS INSTALLATION ARE IN COMPLIANCE WITH NFPA 780 CRITERIA, AND MANUFACTURED IN ACCORDANCE WITH U.L. 96, IN ACCORDANCE WITH NAVSEA OP 5.

3. CONTRACTOR MUST PROVIDE AN UNDERWRITER'S LABORATORY (UL) LIGHTNING PROTECTION INSPECTION CERTIFICATE FOR ANY FACILITY HAVING A LPS INSTALLATION. ADDITIONALLY, A THIRD PARTY INSPECTION COMPANY MUST CERTIFY THE LPS IS IN COMPLIANCE WITH THE STANDARD DESIGN DRAWINGS AS INDICATED. IN ADDITION, CONTRACTOR MUST NOTIFY CONTRACTING OFFICER FOR NAVFAC TO INSPECT AND CERTIFY THE LPS PRIOR TO COMPLETION. REFER TO S-002 FOR PROCEDURE TESTING AND VERIFICATION REQUIREMENTS.

4. COMPONENTS INDICATED ON THIS SHEET SHOW GENERAL DIRECTION FOR THE LPS COMPONENTS. CONTRACTOR MUST PROVIDE NECESSARY COMPONENTS FOR A COMPLETE LPS.

5. ALL GROUNDING CONDUCTORS MUST BE #2/0 BARE COPPER. PROVIDE BARE COPPER GROUND CONDUCTOR FOR ALL BONDING AND GROUNDING, INCLUDING THE BONDING TO ALL METAL PARTS, INCLUDING STAIR GUARDRAILS, DOOR AND DOOR FRAMES, REINFORCEMENT IN FLOOR/WALL, METAL AIR VENTILATOR AND LOUVERS.

6. METAL BODIES WITHIN 6'-0" OF THE LIGHTNING PROTECTION SYSTEM MUST BE BONDED TO THE SYSTEM IN ACCORDANCE WITH NFPA 780.

7. REFER TO LIGHTNING PROTECTION SYSTEM DETAILS ON SHEET E-502S AND E-509S FOR ADDITIONAL INFORMATION.

8. ORDNANCE AND STATIC GROUND BUS BARS MUST BE COPPER. INSTALL 30" ABOVE FINISHED FLOOR.

9. METAL GUARDRAILS MUST BE CONSTRUCTED AND SERVED AS STRIKE TERMINATION DEVICES AS PER NFPA 780 (LATEST REV). GUARD RAILS MUST NOT EXCEED 45" HIGH AND MUST BE IN COMPLIANCE WITH OSHA REG. 1926.502 FALL PROTECTION SYSTEM CRITERIA AND PRACTICES PER 1926.502 (B)(1).

10. THE GROUND RING RESISTANCE TO EARTH MUST BE MAINTAINED AT 25 OHM OR LESS. IF THIS REQUIREMENT IS NOT ACHIEVABLE, EVEN THROUGH ADDITIONAL GROUND RODS OR GRID CONDUCTOR LOOP, NOTIFY NOSSA/GOVERNMENT FOR ADDITIONAL ACTIONS TAKEN TO DECREASE THE RESISTANCE TO EARTH AS LOW AS POSSIBLE.

11. ALL BONDING CONNECTIONS MUST HAVE RESISTANCE MAXIMUM OF 1 OHM, INCLUDING AIR TERMINATION SYSTEM, DOWN CONDUCTORS TO LIGHTNING PROTECTION GROUNDING SYSTEM IAW NAFSEA OP5, SECTION 5-4.1.

12. A CATENARY SYSTEM MAY BE PROVIDED IN ADDITION TO FARADAY CAGE SYSTEM UNDER SITE-ADAPTATION. THE SYSTEM MUST BE BONDED BACK TO THE HEADWALL AS REQUIRED. CONTRACTOR MUST SUBMIT FARADAY CAGE DETAILS FOR APPROVAL PRIOR TO CONSTRUCTION. REFER TO NAVSEA OP 5 FOR PRIMARY GROUNDING SYSTEM.

13. THE GROUND GIRDLE/RING MUST BE INSTALLED IN EARTH UNDISTURBED BY EXCAVATION, NOT IN EARTH FILL OR WHOLLY UNDER PAVED AREAS OR ROADWAYS WHERE RAINFALL CANNOT PENETRATE TO KEEP SOIL MOIST.

14. THE STRUCTURAL COMPONENTS OF THE BUILDING MUST BE BONDED BETWEEN THE FLOOR, WALLS AND ROOF. REBAR MUST BE BONDED TOGETHER OR BY ADDING EXTERNAL BONDING GROUND CONDUCTORS BETWEEN COMPONENTS. THE COMPONENTS MUST BE BONDED AT EVERY 5 FEET MAXIMUM INTERVAL IN ACCORDANCE WITH OP5 6-4.1.1.3. REFER TO DETAIL A1/E-504S.

15. PROVIDE #2/0 BONDING CONDUCTOR FROM BRIDGE CRANE RAIL (NOT SHOWN) TO STATIC GROUNDING SYSTEM, TYPICAL FOR ALL CRANES IN MAGAZINE.

16. REFER TO GENERAL NOTES ON E-002S FOR ADDITIONAL INFORMATION.

17. LIGHTNING PROTECTION MUST BE A FARADAY CAGE TYPE SYSTEM WITH THE STRUCTURAL COMPONENTS OF THE MAGAZINES BONDED TOGETHER AS REQUIRED BY THE NAVSEA OP5 REQUIREMENTS. ADDITIONALLY, 3/16-INCH THICK MINIMUM AND 42-INCH HIGH MAXIMUM METAL GUARDRAILS MUST BE UTILIZED AS STRIKE TERMINATION DEVICES ON THE MAGAZINE HEADWALLS WHICH MUST BE BONDED TO THE SECONDARY GROUND RING AT BOTH ENDS PROVIDING A TWO-WAY PATH TO GROUND.

18. EXTERIOR CONDUCTORS WITHIN 8 FEET OF PAVEMENT MUST BE PROTECTED IN 1" SCHEDULE 80 PVC CONDUIT.

KEYED NOTES

1. ROUTE #2/0 BARE COPPER GROUNDING CONDUCTOR (BURIED GROUNDING RING) AS INDICATED, AT 30" MIN. BELOW FINISHED GRADE AND MINIMUM 3'-0" FROM FOUNDATION AROUND FACILITY OR AT LEAST 2'-0" FROM THE BUILDING EXTERIOR DRIP LINE. RE: C2/E-508S.

2. PROVIDE ELECTRICAL COPPER GROUNDING BUS BAR. COORDINATE EXACT LOCATION PRIOR TO ROUGH-IN. RE: C4/E-501S AND A3/E-508S.

3. ROUTE #2/0 BARE COPPER GROUNDING CONDUCTOR FROM SINGLE POINT GROUND BUS BAR TO GROUND TEST WELL.

4. ROUTE #2/0 BARE COPPER GROUNDING ELECTRODE FROM REINFORCED STRUCTURAL STEEL TO SECONDARY GROUNDING RING.

5. ROUTE #2/0 BARE COPPER GROUNDING CONDUCTOR FROM FOUNDATION STEEL REBAR TO SECONDARY GROUND RING.

6. ROUTE #2/0 BARE COPPER GROUNDING CONDUCTOR BETWEEN UPPER AND LOWER GUARD RAILS AND SECURE TO HEADWALL. RE: A1/EG201S.

7. PROVIDE #2/0 BARE COPPER GROUNDING CONDUCTOR FROM STATIC GROUND TO SECONDARY GROUNDING RING AS INDICATED UTILIZING BOLTED CONNECTIONS FOR EASE IN DISCONNECTING DURING TESTING. PERFORM TESTING PER NAVSEA OP5.

8. ALL HEADWALL GUARD RAILS AND ALL ASSOCIATED POSTS MUST BE DRILLED AND TAPPED WITH THREADED STUDS FOR CONNECTION TO COPPER GROUNDING CONDUCTORS WITH #2/0 COPPER WIRE LUGS. ROUTE #2/0 BARE COPPER GROUNDING CONDUCTOR EXPOSED ALONG THE ENTIRE LENGTH OF HEADWALL. PROVIDE BIMETALLIC CONNECTORS AS REQUIRED FOR ATTACHING GUARD RAILS TO DOWN GROUNDING CONDUCTORS. ALL CONNECTORS, DEVICES AND COMPONENTS UTILIZED MUST BE EITHER UL LISTED OR LABELED AND LISTED FOR ITS USE.

9. GUARD RAILS MUST BE ALUMINUM PIPE. THICKNESS MUST NOT BE LESS THAN 3/16" AND MAXIMUM HEIGHT OF 42" (+/-3"). REFER TO ARCHITECTURAL SPECIFICATIONS AND ELEVATIONS ON DETAIL A1/EG201S FOR ADDITIONAL INFORMATION.

10. ROUTE #2/0 BARE COPPER GROUNDING DOWN CONDUCTOR IN A 1" CONDUIT TO SECONDARY GROUNDING ELECTRODE. DOWN CONDUCTOR MUST BE CONTINUOUS AND ON EXTERIOR OF BUILDING.

11. PROVIDE #2/0 IN GREEN INSULATED COPPER GROUNDING CONDUCTOR IN 1" PVC BETWEEN ORDNANCE GROUND BUS BAR UNDER SLAB TO GROUND TEST WELL AS INDICATED UTILIZING BOLTED CONNECTIONS FOR EASE IN DISCONNECTING DURING TESTING. INSULATION MUST BE STRIPPED BARE FROM TERMINATION POINT UP TO THE POINT OF CONCEALMENT IN CONDUIT. PERFORM TESTING PER NAVSEA OP5. PROVIDE A 3"X9" BLACK PLASTIC BACKGROUND LABEL WITH 1" WHITE LETTERS INDICATING "ORDNANCE GROUND" AT EXPOSED LOCATIONS.

12. PROVIDE #2/0 BARE COPPER LIGHTNING PROTECTION DOWN CONDUCTORS TO SECONDARY GROUNDING ELECTRODE.

13. PROVIDE TWO (2) LIGHTNING GROUND CONDUCTORS - #2/0 BARE COPPER AND CONNECT TO AIR TERMINALS AS INDICATED. RE: C1/E-511S.

14. PROVIDE A #2/0 BONDING CONDUCTOR FROM SECONDARY GROUND RING TO BLAST DOOR'S GROUND REEL. EXTEND #6 GROUND CONDUCTOR THROUGH FLEXIBLE CARRIER TRACK. MAKE BONDING AT FEASIBLE LOCATION TO ALLOW A FULL DOOR OPERATION WITHOUT ANY INTERFERENCES WITH CABLE REEL OPERATION.

15. PROVIDE #2/0 BONDING CONDUCTOR FROM DOOR METAL EQUIPMENT/DEVICES/METAL DOOR FRAME TO BOTTOM OF PILASTER'S REBAR AND BOND TO SECONDARY GROUND RING AS INDICATED.

16. MINIMUM DISTANCE REQUIREMENT BETWEEN THE STATIC GROUND TERMINATION POINT AND THE LIGHTNING PROTECTION DOWN CONDUCTOR FROM VENT TO SECONDARY GROUND RING.

17. BOND TO PANEL 'MDP' AND NETWORK CABINET. RE: A1/E-507S.

18. PROVIDE #2/0 BONDING CONDUCTOR FROM SECONDARY GROUND RING TO MAIN EXTERIOR DISCONNECT SPD.

19. PROVIDE #2/0 BONDING CONDUCTOR FROM SECONDARY GROUND RING TO INTERIOR AND EXTERIOR VENTILATION GRATES. CONFIRM EXACT LOCATION.

20. INTERCONNECT ADJACENT MAGAZINE GROUNDING GIRDLE WHERE APPLICABLE.

THESE DRAWINGS HAVE BEEN ADAPTED FROM APPROVED NAVFAC MUNITIONS STORAGE CONSTRUCTION DOCUMENTS, NAVFAC DRAWING NUMBERS 14145654 TO 14145739, APPROVED BY DDESB ON 24 SEPT 2024. JACOBS DOR RESPONSIBILITY AND SEAL APPLICABILITY IS LIMITED TO THE SITE ADAPTATIONS AND MODIFICATIONS MADE TO THIS DRAWING.

ORIGINAL STANDARD DRAWING IS NAVFAC DRAWING NUMBER 14145709 SHT 56 OF 86

SYM	DESCRIPTION	DATE	APPR.

NAVFAC

COMMONWEALTH OF VIRGINIA
KELLEY BOURASSA
LIC. NO. 0402061759
6/23/2025
PROFESSIONAL ENGINEER
SEAL

Jacobs
1100 NORTH GLEBE ROAD
SUITE 500
ARLINGTON, VIRGINIA 22201
571.218.1000
FAX: 571.218.1600
A/E INFO

APPROVED
FOR COMMANDER NAVFAC 8/14/2025
ACTIVITY
APPROVED BY LCDR ELIZABETH OLOKODE NAVFAC NLON FEAD DIRECTOR NEW LONDON, GROTON, CT
SATISFACTORY TO DATE 05/27/2025

DES	JP	DRW JP	CHK KB
PM/DM	SMS/CWJ		
BRANCH MANAGER	WRB		
CHIEF ENG/ARCH	JWJ		
FIRE PROTECTION	HPN		

DEPARTMENT OF THE NAVY
NAVAL FACILITIES ENGINEERING SYSTEMS COMMAND
MID-ATLANTIC
NAVAL FACILITIES ENGINEERING SYSTEMS COMMAND - MID-ATLANTIC
NAVAL STATION - NORFOLK, VA
NAVAL SUBMARINE BASE NEW LONDON
GROTON, CONNECTICUT
P-1102 WEAPONS MAGAZINE & ORDNANCE OPERATIONS FACILITY
TYPE G MAGAZINE
ELECTRICAL GROUNDING PLAN - SITE ADAPTED

SCALE: NONE
EPROJECT NO.: 1667770
CONSTR. CONTR. NO.
NAVFAC DRAWING NO.
12894213
SHEET 61 OF 91
EG102S

FDZE1628
EG102S.dwg

FILE NAME: C:\pw_work\dms\jdm0031\proj_philligh\d1711378\EG102S.dwg LAYOUT NAME: EG102 - ELECTRICAL GROUNDING PLAN PLOTTED: Thursday, June 12, 2025 - 12:49pm USER: PHILLIGH

THESE DRAWINGS HAVE BEEN ADAPTED FROM APPROVED NAVFAC MUNITIONS STORAGE CONSTRUCTION DOCUMENTS, NAVFAC DRAWING NUMBERS 14145654 TO 14145739, APPROVED BY DDESB ON 24 SEPT 2024. JACOBS DOR RESPONSIBILITY AND SEAL APPLICABILITY IS LIMITED TO THE SITE ADAPTATIONS AND MODIFICATIONS MADE TO THIS DRAWING.

ORIGINAL STANDARD DRAWING IS NAVFAC DRAWING NUMBER 14145711 SHT 58 OF 86

SHEET NOTES

1. REFER TO GENERAL NOTES ON E-002S AND EG101S FOR ADDITIONAL INFORMATION.
2. LINE WORK ON THIS SHEET ARE #2/0 BARE COPPER GROUNDING CONDUCTORS.
3. METAL GUARDRAILS MUST BE CONSTRUCTED AND SERVED AS STRIKE TERMINATION DEVICES AS PER NFPA 780 (LATEST REV). GUARD RAILS MUST NOT EXCEED 45" HIGH AND MUST BE IN COMPLIANCE WITH OSHA REG. 1926.502 FALL PROTECTION SYSTEM CRITERIA AND PRACTICES PER 1926.502 (B)(1).

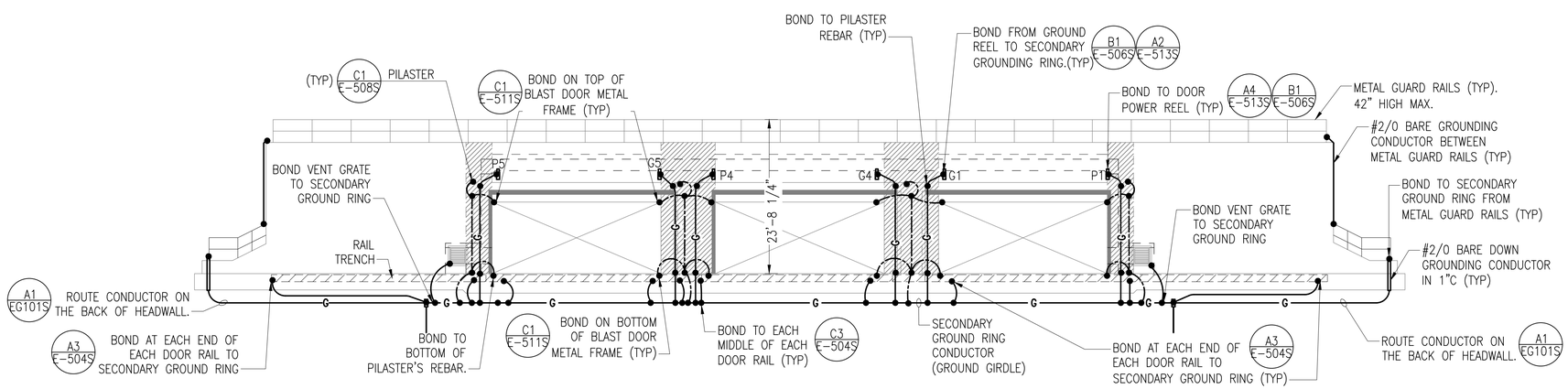

A1 GROUNDING PLAN - FRONT ELEVATION

SCALE: 3/32" = 1'-0" (EG101S)

0 8' 16' 32'

SYM	DESCRIPTION	DATE	APPR.

NAVFAC

COMMONWEALTH OF VIRGINIA
KELLEY BOURASSA
LIC. NO. 0402061759
6/23/2025
PROFESSIONAL ENGINEER
SEAL

Jacobs
1100 NORTH GLEBE ROAD
SUITE 500
ARLINGTON, VIRGINIA 22201
571.218.1000
FAX: 571.218.1600
A/E INFO

APPROVED
FOR COMMANDER NAVFAC 8/14/2025

ACTIVITY
APPROVED BY LCDR ELIZABETH OLOKODE NAVFAC NLON FEAD DIRECTOR NEW LONDON, GROTON, CT
SATISFACTORY TO DATE 05/27/2025

DES	JP	DRW	JP
CHK	KB		
PM/DM	SMS/CWJ		
BRANCH MANAGER	WRB		
CHIEF ENG/ARCH	JWJ		
FIRE PROTECTION	HPN		

DEPARTMENT OF THE NAVY
NAVAL FACILITIES ENGINEERING SYSTEMS COMMAND
MID-ATLANTIC
NAVAL FACILITIES ENGINEERING SYSTEMS COMMAND - MID-ATLANTIC
NAVAL STATION - NORFOLK, VA
NAVAL SUBMARINE BASE NEW LONDON
GROTON, CONNECTICUT
P-1102 WEAPONS MAGAZINE & ORDNANCE OPERATIONS FACILITY
TYPE G MAGAZINE
ELECTRICAL GROUNDING PLAN ELEVATIONS - SITE ADAPTED

SCALE: AS SHOWN
EPROJECT NO.: 1667770
CONSTR. CONTR. NO.
NAVFAC DRAWING NO. 12894214
SHEET 62 OF 91
EG201S

FDZE1628 EG201S.dwg

FILE NAME: C:\pw_workdir\dms0033\jrg_philllih\d1711378\EG201S.dwg LAYOUT NAME: EG201 - ELECTRICAL GROUNDING PLAN ELEVATIONS PLOTTED: Thursday, June 12, 2025 - 12:49pm USER: PHILLIH

SIDEFLASH – AT HIGHEST POINT OF BUILDING	METAL PARTS (GUARD RAILS)
H – HEIGHT OF PROTECTED STRUCTURE (FT):	23.7
D – SIDEFLASH (D=H/6) (FT):	3.9
NOTES: H – HEIGHT OF THE STRUCTURE OR OBJECT REQUIRING PROTECTION	

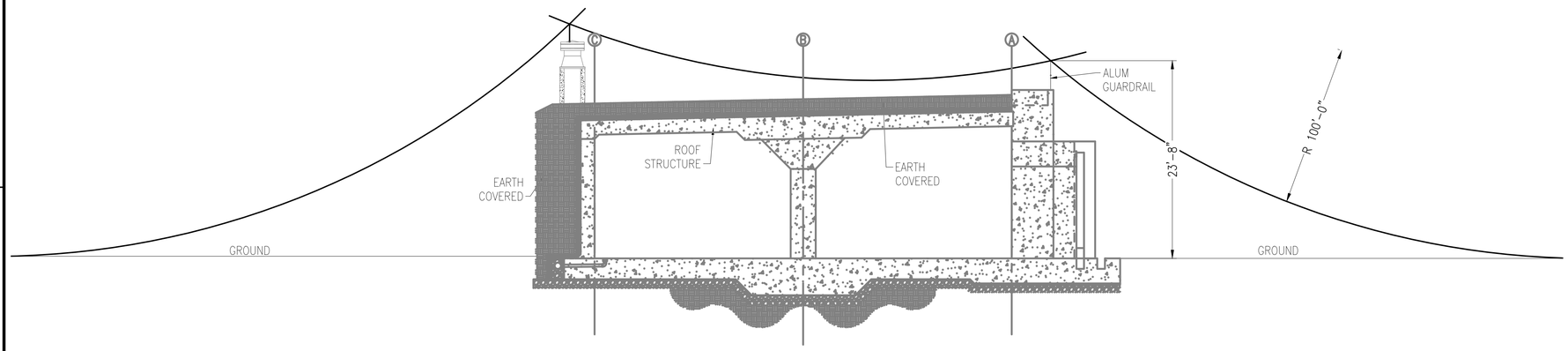

C1 ROLLING SPHERE ANALYSIS - SIDE ELEVATION - BOTH OPTIONS

SCALE: 1/8" = 1'-0"

0 4' 8' 16'

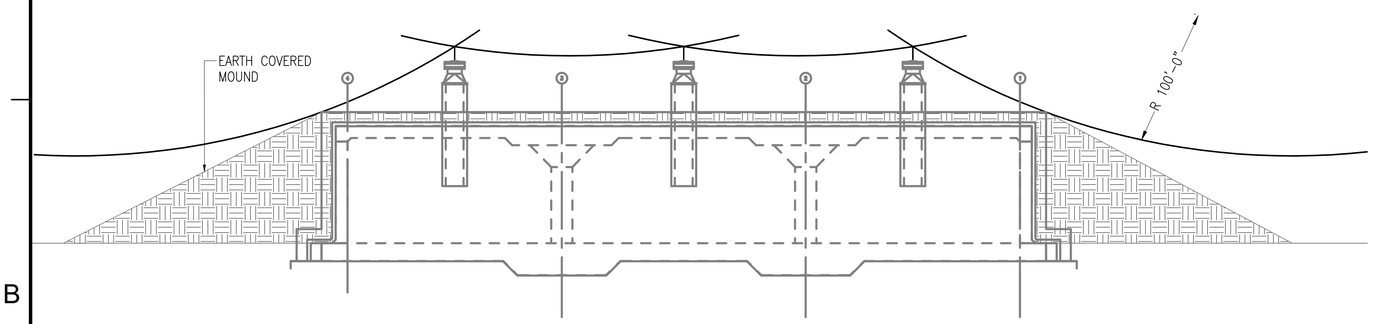

B1 ROLLING SPHERE ANALYSIS - REAR ELEVATION

SCALE: 3/32" = 1'-0"

0 8' 16' 32'

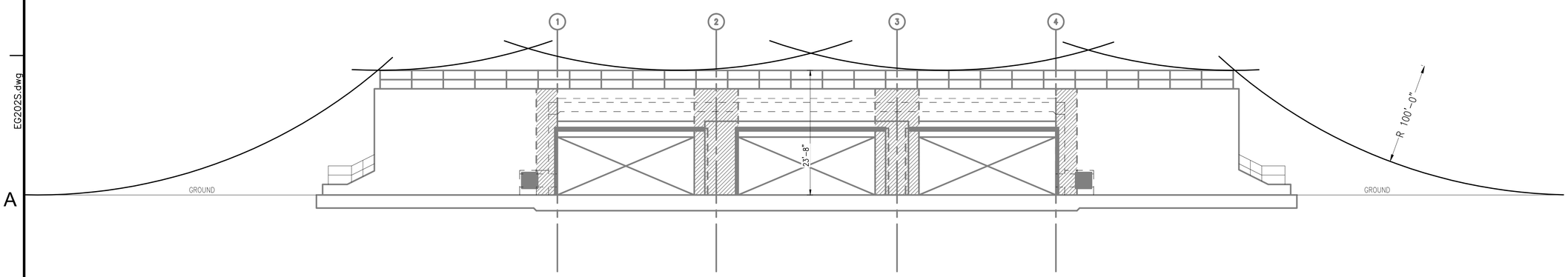

A1 ROLLING SPHERE ANALYSIS - FRONT ELEVATION - BOTH OPTIONS

SCALE: 3/32" = 1'-0"

0 8' 16' 32'

SHEET NOTES

1. REFER TO GENERAL NOTES ON E-002S FOR ADDITIONAL INFORMATION.
2. METAL GUARDRAILS MUST BE CONSTRUCTED AND SERVED AS STRIKE TERMINATION DEVICES AS PER NFPA 780 (LATEST REV). GUARD RAILS MUST NOT EXCEED 45" HIGH AND MUST BE IN COMPLIANCE WITH OSHA REG. 1926.502 FALL PROTECTION SYSTEM CRITERIA AND PRACTICES PER 1926.502 (B)(1).
3. PROVIDE BONDS AT GAPS IN HANDRAIL TO MAKE THE ENTIRE HANDRAIL SYSTEM ELECTRICALLY CONTINUOUS. USE MINIMUM #2/0 AWG CONDUCTOR.

THESE DRAWINGS HAVE BEEN ADAPTED FROM APPROVED NAVFAC MUNITIONS STORAGE CONSTRUCTION DOCUMENTS, NAVFAC DRAWING NUMBERS 14145654 TO 14145739, APPROVED BY DDESB ON 24 SEPT 2024. JACOBS DOR RESPONSIBILITY AND SEAL APPLICABILITY IS LIMITED TO THE SITE ADAPTATIONS AND MODIFICATIONS MADE TO THIS DRAWING.

ORIGINAL STANDARD DRAWING IS NAVFAC DRAWING NUMBER 14145712 SHT 59 OF 86

SYM	DESCRIPTION	DATE	APPR.

NAVFAC

COMMONWEALTH OF VIRGINIA
KELLEY BOURASSA
LIC. NO. 0402061759
6/23/2025
PROFESSIONAL ENGINEER
SEAL

Jacobs
1100 NORTH GLEBE ROAD
SUITE 500
ARLINGTON, VIRGINIA 22201
571.218.1000
FAX: 571.218.1600
A/E INFO.

APPROVED
FOR COMMANDER NAVFAC 8/14/2025
ACTIVITY
APPROVED BY LCDR ELIZABETH OLOKODE NAVFAC N.ON FEAD DIRECTOR NEW LONDON, GROTON, CT
SATISFACTORY TO DATE 05/27/2025

DES	JP	DRW	JP
CHK	KB		
PM/DM	SMS/CWJ		
BRANCH MANAGER	WRB		
CHIEF ENG/ARCH	JWJ		
FIRE PROTECTION	HPN		

DEPARTMENT OF THE NAVY
NAVAL FACILITIES ENGINEERING SYSTEMS COMMAND
MID-ATLANTIC
NAVAL FACILITIES ENGINEERING SYSTEMS COMMAND - MID-ATLANTIC
NAVAL STATION - NORFOLK, VA
NAVAL SUBMARINE BASE NEW LONDON
GROTON, CONNECTICUT
P-1102 WEAPONS MAGAZINE & ORDNANCE OPERATIONS FACILITY
TYPE G MAGAZINE

ELECTRICAL LIGHTNING ZONE PROTECTION ELEVATION - SITE ADAPTED

SCALE: AS SHOWN
EPROJECT NO.: 1667770
CONSTR. CONTR. NO.
NAVFAC DRAWING NO.
12894215
SHEET 63 OF 91
EG202S

FILE NAME: C:\pw_workdir\dms0031\jrg_philliph\a1711378\EG202S.dwg LAYOUT NAME: EG202 – ELECTRICAL LIGHTNING ZONE PROTECTION ELEVATION PLOTTED: Thursday, June 12, 2025 – 12:48pm USER: PHILLIH
EG202S.dwg
FDZE1628

SEE SHEET E-102S FOR SHEET AND KEYED NOTES.

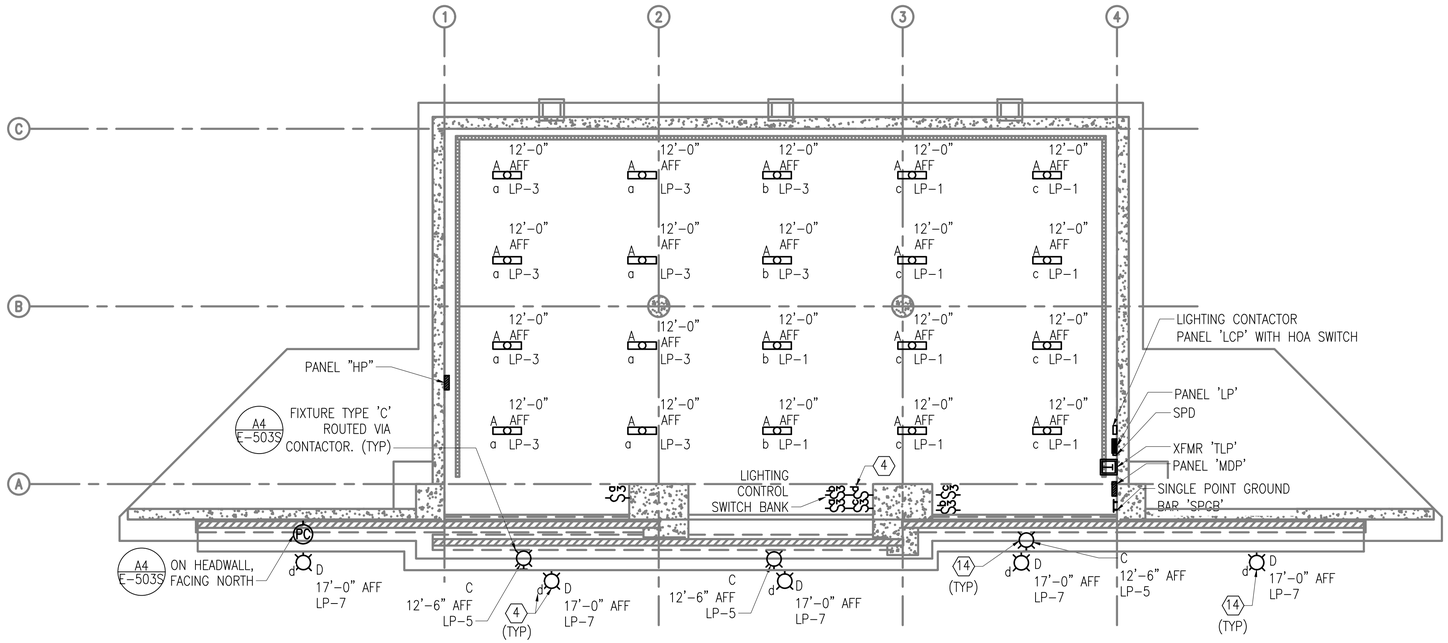

C1 ELECTRICAL LIGHTING PLAN

SCALE: 3/32" = 1'-0"

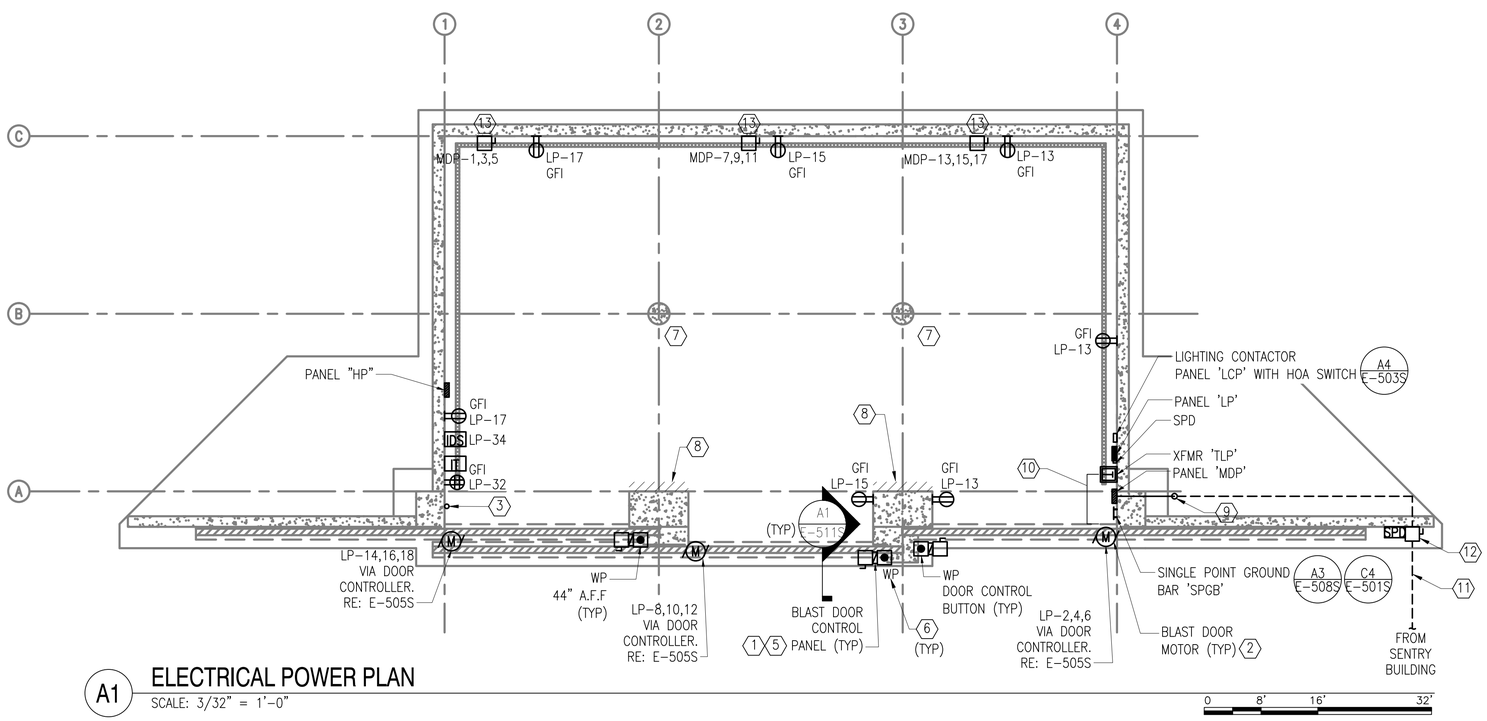

A1 ELECTRICAL POWER PLAN

SCALE: 3/32" = 1'-0"

PLAN NORTH

THESE DRAWINGS HAVE BEEN ADAPTED FROM APPROVED NAVFAC MUNITIONS STORAGE CONSTRUCTION DOCUMENTS, NAVFAC DRAWING NUMBERS 14145654 TO 14145739, APPROVED BY DDESB ON 24 SEPT 2024. JACOBS DOR RESPONSIBILITY AND SEAL APPLICABILITY IS LIMITED TO THE SITE ADAPTATIONS AND MODIFICATIONS MADE TO THIS DRAWING.

ORIGINAL STANDARD DRAWING IS NAVFAC DRAWING NUMBER 14145713 SHT 60 OF 86

SYM	DESCRIPTION	DATE	APPR

NAVFAC

COMMONWEALTH OF VIRGINIA
KELLEY BOURASSA
LIC. NO. 0402061759
6/23/2025
PROFESSIONAL ENGINEER
SEAL

Jacobs
1100 NORTH GLEBE ROAD
SUITE 500
ARLINGTON, VIRGINIA 22201
571.218.1000
FAX: 571.218.1600

A/E INFO

APPROVED
FOR COMMANDER NAVFAC 8/14/2025

ACTIVITY
APPROVED BY LCDR ELIZABETH OLOKODE NAVFAC N.LON FEAD DIRECTOR NEW LONDON, GROTON, CT

SATISFACTORY TO DATE 05/27/2025

DES	JP	DRW	JP
CHK	KB		
PM/DM	SMS/CWJ		
BRANCH MANAGER	WRB		
CHIEF ENG/ARCH	JWJ		
FIRE PROTECTION	HPN		

DEPARTMENT OF THE NAVY
NAVAL FACILITIES ENGINEERING SYSTEMS COMMAND
MID-ATLANTIC
NAVAL FACILITIES ENGINEERING SYSTEMS COMMAND - MID-ATLANTIC
NAVAL STATION - NORFOLK, VA
NAVAL SUBMARINE BASE NEW LONDON
GROTON, CONNECTICUT
P-1102 WEAPONS MAGAZINE & ORDNANCE OPERATIONS FACILITY
TYPE G MAGAZINE

ELECTRICAL FLOOR PLAN – SITE ADAPTED

SCALE: AS SHOWN
EPROJECT NO.: 1667770
CONSTR. CONTR. NO.
NAVFAC DRAWING NO. 12894216
SHEET 64 OF 91

E-101S

FILE NAME: C:\pw_workdir\dms003\jrg_philijh\d1711378\E-101S.dwg LAYOUT NAME: E-101 – ELECTRICAL FLOOR PLAN PLOTTED: Thursday, June 12, 2025 – 11:46pm USER: PHILLIJH

E-101S.dwg

FDZE1628

SHEET NOTES

1. REFER TO GENERAL NOTES ON E-002S FOR ADDITIONAL INFORMATION.
2. COORDINATE FINAL LOCATIONS OF ALL LIGHTING FIXTURES AND ASSOCIATED LIGHTING CONTROLS WITH OTHER TRADES PRIOR TO ROUGH-IN.
3. ALL CONDUIT MUST BE RIGID GALVANIZED STEEL CONDUIT UNLESS INDICATED OTHERWISE.
4. EXPOSED CONDUITS ON EXTERIOR WALLS IS PROHIBITED.
5. PROVIDE A MINIMUM NEMA 4X ENCLOSURE FOR ALL ELECTRICAL EQUIPMENT/DEVICES LOCATED OUTDOORS.
6. REFER TO T-SERIES DRAWINGS FOR TELECOM/SECURITY FOR ADDITIONAL INFORMATION.

KEYED NOTES

1. COORDINATE ALL POWER AND CONTROL RACEWAY REQUIREMENTS WITH MANUFACTURER. PROVIDE CONTROL WIRING FOR INTERLOCKS WITH DOOR LIMIT SWITCHES AND IDL DOOR LOCKING SYSTEM FOR OPERATION.
2. REFER TO DOOR CONTROL DIAGRAM ON SHEET E-505S FOR ADDITIONAL CONTROL INFORMATION.
3. ROUTE ALL CONDUITS ON SURFACE AS REQUIRED TO AVOID CONDUIT PENETRATIONS ON HEADWALL ABOVE BLAST DOOR.
4. FIXTURE TYPE 'D' MUST BE CONTROLLED BY SWITCHLEG 'd'.
5. COORDINATE WITH DOOR MANUFACTURER FOR QUANTITY.
6. LOCATE OUTSIDE ON THE PILASTER COLUMN WITH WATERPROOF COVER.
7. DO NOT MOUNT ELECTRICAL EQUIPMENT ON SURFACE AROUND THE COLUMN.
8. DO NOT MOUNT ELECTRICAL EQUIPMENT ON SURFACE OF THIS PILASTER WALL. PROVIDE 16" CLEARANCE IN FRONT OF THE WALL AREA.
9. UNDERGROUND CONDUIT MUST STUB-UP BEFORE PENETRATING THRU WALL FOR CONNECTION TO PANELBOARD.
10. UTILIZE THE FIRST 7' IN FRONT OF PILASTER FOR ELECTRICAL PANEL AND ELECTRICAL EQUIPMENT AS SHOWN. NO FURTHER THAN 7' INSIDE THE MAGAZINE FOR STORAGE SPACE. IF NOT FEASIBLE, CONTRACTOR MUST SUBMIT AN RFI EXPLAINING THE REASON WHY IT'S NOT FEASIBLE FOR GOVERNMENT APPROVAL.
11. 4" CONDUIT FOR POWER FEEDER TO EXTERIOR DISCONNECT.
12. 600V, 125A, 3P, NON-FUSED DISCONNECT SWITCH IN NEMA 4X ENCLOSURE FOR BUILDING PRIMARY DISCONNECTING MEANS. PROVIDE WITH INTEGRAL SURGE PROTECTIVE DEVICE IN NEMA 4X ENCLOSURE.
13. 600V, 60A, 3P DISCONNECT SWITCH FUSED AT 35A IN NEMA 1 ENCLOSURE FOR CRANE. COORDINATE FINAL LOCATION OF DISCONNECT SWITCH WITH CRANE MANUFACTURER. PROVIDE 3#8 + 1#10G IN 3/4"C.
14. REFER TO DETAIL C4 ON SHEET E-511S FOR TYPE "C" AND "D" LIGHTING FIXTURE MOUNTING INFORMATION.

THESE DRAWINGS HAVE BEEN ADAPTED FROM APPROVED NAVFAC MUNITIONS STORAGE CONSTRUCTION DOCUMENTS, NAVFAC DRAWING NUMBERS 14145654 TO 14145739, APPROVED BY DDESB ON 24 SEPT 2024. JACOBS DOR RESPONSIBILITY AND SEAL APPLICABILITY IS LIMITED TO THE SITE ADAPTATIONS AND MODIFICATIONS MADE TO THIS DRAWING.

ORIGINAL STANDARD DRAWING IS NAVFAC DRAWING NUMBER 14145715 SHT 62 OF 86

SYM	DESCRIPTION	DATE	APPR.

NAVFAC

COMMONWEALTH OF VIRGINIA
KELLEY BOURASSA
LIC. NO. 0402061759
6/23/2025
PROFESSIONAL ENGINEER
SEAL

Jacobs
1100 NORTH GLEBE ROAD
SUITE 500
ARLINGTON, VIRGINIA 22201
571.218.1000
FAX: 571.218.1600
A/E INFO

APPROVED
FOR COMMANDER NAVFAC 8/14/2025

ACTIVITY
APPROVED BY LCDR ELIZABETH OLOKODE NAVFAC NLON FEAD DIRECTOR NEW LONDON, GROTON, CT
SATISFACTORY TO DATE 05/27/2025

DES	JP	DRW	JP
CHK	KB		
PM/DM	SMS/CWJ		
BRANCH MANAGER	WRB		
CHIEF ENG/ARCH	JWJ		
FIRE PROTECTION	HPN		

DEPARTMENT OF THE NAVY
NAVAL FACILITIES ENGINEERING SYSTEMS COMMAND
MID-ATLANTIC
NAVAL FACILITIES ENGINEERING SYSTEMS COMMAND - MID-ATLANTIC
NAVAL STATION - NORFOLK, VA
NAVAL SUBMARINE BASE NEW LONDON
GROTON, CONNECTICUT
P-1102 WEAPONS MAGAZINE & ORDNANCE OPERATIONS FACILITY
TYPE G MAGAZINE

ELECTRICAL FLOOR PLAN - SITE ADAPTED

SCALE: NONE
EPROJECT NO.: 1667770
CONSTR. CONTR. NO.
NAVFAC DRAWING NO.
12894217
SHEET 65 OF 91

E-102S

FDZE1628 E-102S.dwg

FILE NAME: C:\pw_workdir\dms003\jcvg_philijh\d1711378\E-102S.dwg LAYOUT NAME: E-102 - ELECTRICAL FLOOR PLAN PLOTTED: Thursday, June 12, 2025 - 12:08pm USER: PHILLJH

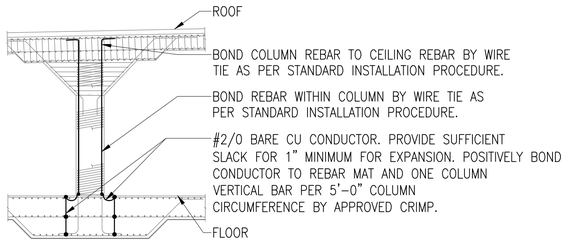

D1 COLUMN GROUNDING AND BONDING DETAIL

SCALE: NO SCALE (EG101S)

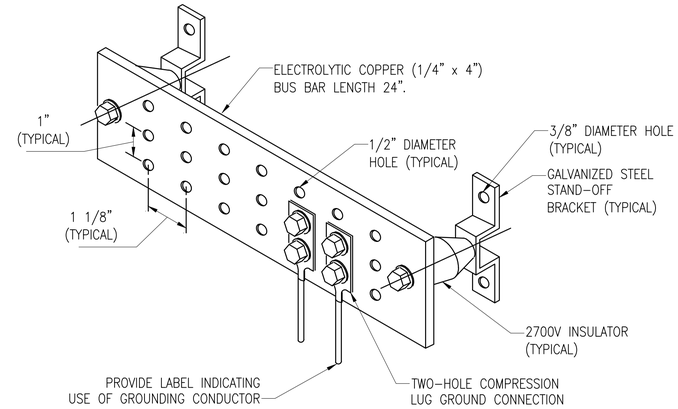

C4 SINGLE POINT GROUNDING BUS BAR (SPGB) BAR DETAIL - TYPICAL

SCALE: NO SCALE (EG101S, E-101S)

NOTES:

1. PROVIDE SELF-ADHESIVE VINYL LABEL TO AFFIX TO ELECTRICAL EQUIPMENT TO WARN OF ARC FLASH HAZARDS.
2. THE LABEL FORMAT AND TEXT CAN BE MODIFIED PROVIDED THAT THE INFORMATION REQUIRED BY UFC 3-501-01 IS INCLUDED.
3. THE LABEL MUST BE LOCATED ON THE EQUIPMENT TO BE CLEARLY VISIBLE TO QUALIFIED PERSONS BEFORE EXAMINATION, ADJUSTMENT, SERVICING, OR MAINTENANCE OF THE EQUIPMENT.
4. THE SIZE OF THE LABEL MUST BE MINIMUM:

EQUIPMENT TYPE	HEIGHT	WIDTH
INDOOR	2"	3"
OUTDOOR	3"	4.5"

5. A DOWNLOADABLE WINDOWS METAFILE IS AVAILABLE FROM LINK BELOW. TYPE IN THE FOLLOWING ADDRESS IN INTERNET EXPLORER:
http://www.wbdg.org/ccb/NAVGRAPH/arc_flash_warning_labels.zip
6. REFER TO UFC 3-560-01, SECTION 1-12 FOR ADDITIONAL ARC-FLASH LABELS INFORMATION AND REQUIREMENT. ADDITIONAL LABELS CAN BE FOUND WITHIN BASIS OF DESIGN, APPENDIX E-ELECTRICAL

A1 ARC FLASH WARNING LABEL

SCALE: NO SCALE

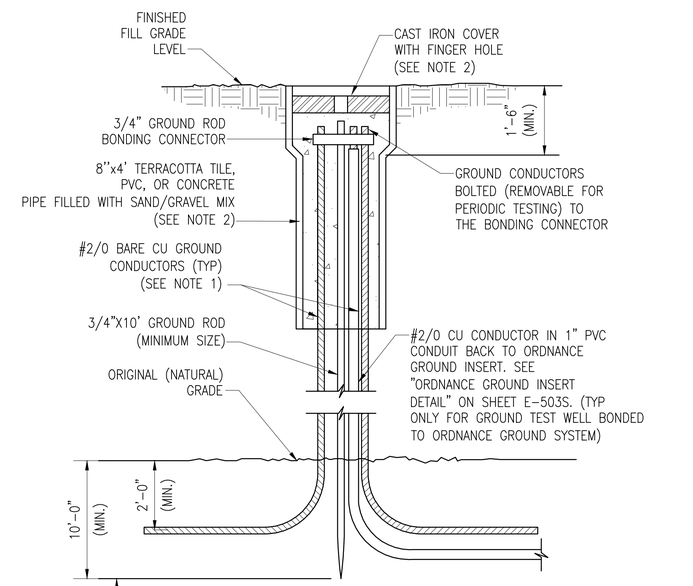

THE DEPTH OF GROUND ROD BELOW NATURAL GRADE MUST BE SITE ADAPTED TO SUIT LOCAL SOIL CONDITION. AT NO TIME MUST THE MINIMUM DEPTH BE LESS THAN 10'-0".

NOTE 1: MAINTAIN THE GROUND CONDUCTORS ISOLATED FROM THE GROUND ROD UNTIL THE BOND CONNECTION AT THE TOP

NOTE 2: PROVIDE "TRAFFIC RATED" TEST WELL AND COVER FOR PAVED AREAS

A4 GROUND TEST WELL INSTALLATION IN EARTH FILL

SCALE: NO SCALE (EG101S)

THESE DRAWINGS HAVE BEEN ADAPTED FROM APPROVED NAVFAC MUNITIONS STORAGE CONSTRUCTION DOCUMENTS, NAVFAC DRAWING NUMBERS 14145654 TO 14145739, APPROVED BY DDESB ON 24 SEPT 2024. JACOBS DOR RESPONSIBILITY AND SEAL APPLICABILITY IS LIMITED TO THE SITE ADAPTATIONS AND MODIFICATIONS MADE TO THIS DRAWING.

ORIGINAL STANDARD DRAWING IS NAVFAC DRAWING NUMBER 14145717 SHT 64 OF 86

SYM	DESCRIPTION	DATE	APPR.

NAVFAC

COMMONWEALTH OF VIRGINIA
KELLEY BOURASSA
LIC. NO. 0402061759
6/23/2025
PROFESSIONAL ENGINEER
SEAL

Jacobs
1100 NORTH GLEBE ROAD
SUITE 500
ARLINGTON, VIRGINIA 22201
571.218.1000
FAX: 571.218.1600
A/E INFO

APPROVED
FOR COMMANDER NAVFAC 8/14/2025

ACTIVITY
APPROVED BY LCDR ELIZABETH OLOKODE NAVFAC NLON FEAD DIRECTOR.NEW LONDON, GROTON, CT
SATISFACTORY TO DATE 05/27/2025

DES	JP	DRW	JP
CHK	KB	PM/DM	SMS/CWJ
BRANCH MANAGER	WRB	CHIEF ENG/ARCH	JWJ
FIRE PROTECTION	HPN		

DEPARTMENT OF THE NAVY
NAVAL FACILITIES ENGINEERING SYSTEMS COMMAND
MID-ATLANTIC
NAVAL FACILITIES ENGINEERING SYSTEMS COMMAND
NAVAL STATION - NORFOLK, VA
NAVAL SUBMARINE BASE NEW LONDON
GROTON, CONNECTICUT
P-1102 WEAPONS MAGAZINE & ORDNANCE OPERATIONS FACILITY
TYPE G MAGAZINE

ELECTRICAL DETAILS - SITE ADAPTED

SCALE: NONE
EPROJECT NO.: 1667770
CONSTR. CONTR. NO.
NAVFAC DRAWING NO. 12894218
SHEET 66 OF 91
E-501S

FILE NAME: C:\pw_workdir\dcn003\jpg_phillijh\d1711378\E-501S.dwg LAYOUT NAME: E-501 - ELECTRICAL DETAILS PLOTTED: Thursday, June 12, 2025 - 12:15pm USER: PHILLIJH
E-501S.dwg
FDZE1628

THESE DRAWINGS HAVE BEEN ADAPTED FROM APPROVED NAVFAC MUNITIONS STORAGE CONSTRUCTION DOCUMENTS, NAVFAC DRAWING NUMBERS 14145654 TO 14145739, APPROVED BY DDESB ON 24 SEPT 2024. JACOBS DOR RESPONSIBILITY AND SEAL APPLICABILITY IS LIMITED TO THE SITE ADAPTATIONS AND MODIFICATIONS MADE TO THIS DRAWING.

ORIGINAL STANDARD DRAWING IS NAVFAC DRAWING NUMBER 14145718 SHT 65 OF 86

NOTES:

1. PROVIDE EXOTHERMIC WELD BONDING TECHNIQUE FOR LIGHTNING PROTECTION GROUNDING CONDUCTORS OR GROUNDING ELECTRODES THAT ARE BURIED, CONCEALED WITHIN THE STRUCTURE OR AT OTHER PERMANENT LOCATIONS. PERMANENT LOCATIONS ARE DEFINED AS THOSE LOCATIONS WHERE THE BOND IS NOT EASILY ACCESSIBLE FOR VISUAL INSPECTION OR MAINTENANCE. HIGH COMPRESSION CLAMPS ARE PERMITTED FOR NON–PERMANENT LOCATIONS.
2. CABLE SPLICE OR OTHER BONDING CONNECTORS MUST BE INSTALLED PER ITS LABEL REQUIREMENTS AND WITH AN APPROVED UL96 LISTING.

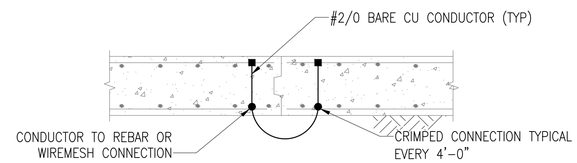

KEYED CONSTRUCTION JOINT (KCJ)

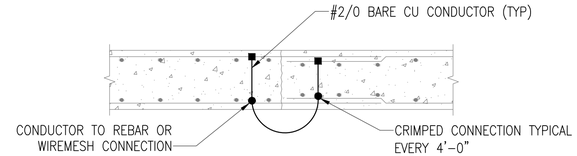

ROUGHENED CONSTRUCTION JOIN (CJ)

B4 TYPICAL BOND CONNECTION AT EACH CONSTRUCTION JOINT

SCALE: NO SCALE

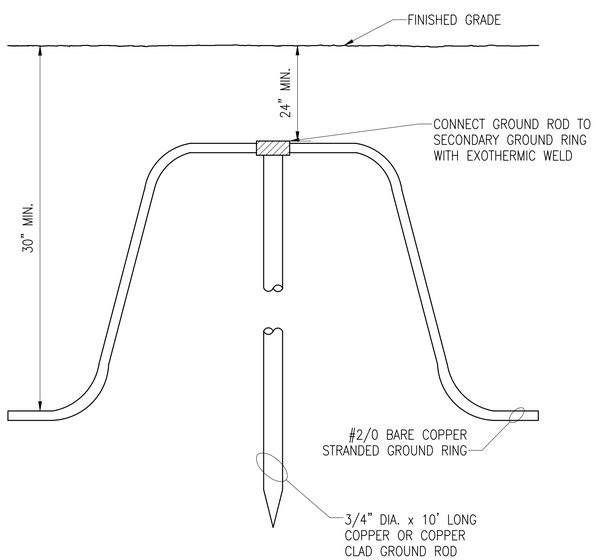

A1 GROUND ROD DETAIL

SCALE: NO SCALE

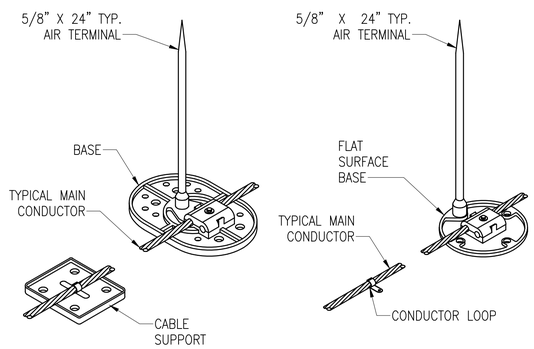

152 – ADHESIVE BASE

FLAT SURFACE BASE

NOTES:

1. ADHESIVE FASTENERS ARE NOT PERMITTED ON DOWN CONDUCTORS AND CROSS CONDUCTORS.
2. BOLTED CONNECTORS ARE NOT PERMITTED ON DOWN CONDUCTOR OR ROOF CONDUCTORS BONDING, EXCEPT AT AIR TERMINAL OR ALUMINUM OR METAL BODIES FOR BONDING PURPOSES. PROVIDE EXOTHERMIC WELDING OR HIGH COMPRESSION ON THE DOWN CONDUCTORS AND ROOF CONDUCTORS.

A2 TYPICAL VENT MOUNTED AIR TERMINAL DETAIL

SCALE: NO SCALE

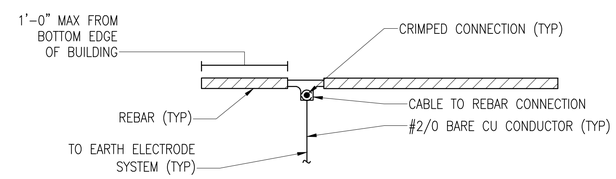

A4 GROUNDING REINFORCING STEEL

SCALE: NO SCALE

SYM	DESCRIPTION	DATE	APPR.

NAVFAC

COMMONWEALTH OF VIRGINIA
KELLEY BOURASSA
LIC. NO. 0402061759
6/23/2025
PROFESSIONAL ENGINEER
SEAL

Jacobs
1100 NORTH GLEBE ROAD
SUITE 500
ARLINGTON, VIRGINIA 22201
571.218.1000
FAX: 571.218.1600
A/E INFO

APPROVED
FOR COMMANDER NAVFAC 8/14/2025

ACTIVITY
APPROVED BY LCDR ELIZABETH OLOKODE NAVFAC NLON FEAD DIRECTOR NEW LONDON, GROTON, CT
SATISFACTORY TO DATE 05/27/2025

DES	JP	DRW	JP
CHK	KB		
PM/DM	SMS/CWJ		
BRANCH MANAGER	WRB		
CHIEF ENG/ARCH	JWJ		
FIRE PROTECTION	HPN		

DEPARTMENT OF THE NAVY
NAVAL FACILITIES ENGINEERING SYSTEMS COMMAND
MID-ATLANTIC
NAVAL FACILITIES ENGINEERING SYSTEMS COMMAND - MID-ATLANTIC
NAVAL STATION - NORFOLK, VA
NAVAL SUBMARINE BASE NEW LONDON
GROTON, CONNECTICUT
P-1102 WEAPONS MAGAZINE & ORDNANCE OPERATIONS FACILITY
TYPE G MAGAZINE

ELECTRICAL DETAILS - SITE ADAPTED

SCALE: NONE
EPROJECT NO.: 1667770
CONSTR. CONTR. NO.
NAVFAC DRAWING NO. 12894219
SHEET 67 OF 91

E-502S

FDZE1628

E-502S.dwg

FILE NAME: C:\pw_workdir\dms003\jeng_philijh\d1711378\E-502S.dwg LAYOUT NAME: E-502 – ELECTRICAL DETAILS PLOTTED: Thursday, June 12, 2025 – 12:14pm USER: PHILLIJH

THESE DRAWINGS HAVE BEEN ADAPTED FROM APPROVED NAVFAC MUNITIONS STORAGE CONSTRUCTION DOCUMENTS, NAVFAC DRAWING NUMBERS 14145654 TO 14145739, APPROVED BY DDESB ON 24 SEPT 2024. JACOBS DOR RESPONSIBILITY AND SEAL APPLICABILITY IS LIMITED TO THE SITE ADAPTATIONS AND MODIFICATIONS MADE TO THIS DRAWING.

ORIGINAL STANDARD DRAWING IS NAVFAC DRAWING NUMBER 14145719 SHT 66 OF 86

NOTES:

1. CONCEAL GROUNDING CONDUCTORS WHERE POSSIBLE.
2. FOR GROUNDING CONDUCTORS RUN EXPOSED, SUPPORT CONDUCTORS 36" ON CENTERS AND WITHIN 12" OF GROUND CONNECTIONS.
3. PROVIDE WALL FASTENER IN ACCORDANCE WITH THE WALL TYPE SEE "SIDE VIEW DETAILS" FOR REQUIREMENTS.
4. THIS GROUNDING DETAIL IS NOT FOR ORDNANCE GROUNDING SYSTEM.

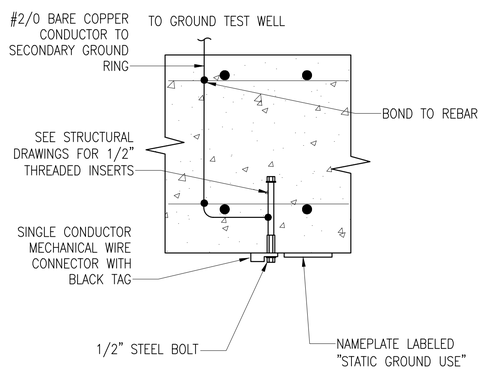

STATIC GROUND INSERT DETAIL NOTES:

1. PROVIDE A REMOVABLE BLACK MELAMINE PLASTIC TAG WITH WHITE LETTERS THAT ATTACHES TO THE STATIC GROUND INSERT. THE TAG MUST INCLUDE THE FOLLOWING INFORMATION:

   "NOT IN SERVICE. NO MAINTENANCE REQUIRED.

   INSTALLATION MEETS STATIC/FACILITY GROUND REQUIREMENT PER NAVSEA OP-5. ACTIVITY MUST PERFORM TESTING PER NAVSEA OP-5 AND ENACT MAINTENANCE SCHEDULE WHEN THE STATIC/FACILITY GROUND INSERT IS PLACED IN SERVICE.

   RETAIN THIS TAG TO REATTACH WHEN REMOVED FROM SERVICE."

A1 STATIC GROUND INSERT PLAN

SCALE: NO SCALE (EG101S)

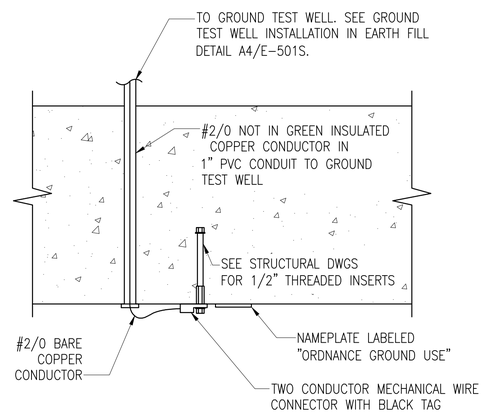

ORDNANCE GROUND INSERT DETAIL NOTES:

1. PROVIDE A REMOVABLE BLACK MELAMINE PLASTIC TAG WITH WHITE LETTERS THAT ATTACHES TO THE ORDNANCE GROUND INSERT. THE TAG MUST INCLUDE THE FOLLOWING INFORMATION:

   "NOT IN SERVICE. NO MAINTENANCE REQUIRED.

   INSTALLATION MEETS ORDNANCE GROUND REQUIREMENT PER NAVSEA OP-5. ACTIVITY MUST PERFORM TESTING PER NAVSEA OP-5 AND ENACT MAINTENANCE SCHEDULE WHEN THE ORDNANCE GROUND INSERT IS PLACED IN SERVICE.

   RETAIN THIS TAG TO REATTACH WHEN REMOVED FROM SERVICE."

2. MAINTAIN THREADED INSERT ISOLATION. DO NOT ALLOW THE THREADED INSERT TO TOUCH REBAR OR OTHER METALLIC OBJECTS IN THE WALL.

A2 ORDNANCE GROUND INSERT PLAN

SCALE: NO SCALE (EG101S)

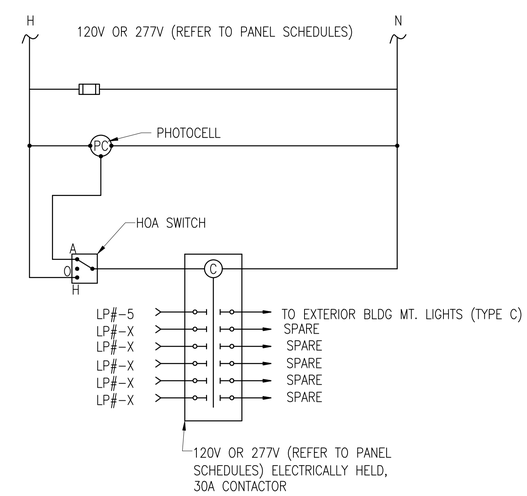

A4 LIGHTING CONTACTOR PANEL 'LCP'

SCALE: NO SCALE (E-101S)

SYM	DESCRIPTION	DATE	APPR.

NAVFAC

COMMONWEALTH OF VIRGINIA
KELLEY BOURASSA
LIC. NO. 040206 1759
6/23/2025
PROFESSIONAL ENGINEER
SEAL

Jacobs
1100 NORTH GLEBE ROAD
SUITE 500
ARLINGTON, VIRGINIA 22201
571.218.1000
FAX: 571.218.1600
A/E INFO

APPROVED
FOR COMMANDER NAVFAC 8/14/2025

ACTIVITY
APPROVED BY LCDR ELIZABETH OLOKODE NAVFAC NLON FEAD DIRECTOR NEW LONDON, GROTON, CT

SATISFACTORY TO DATE	05/27/2025
DES JP DRW JP CHK	KB
PM/DM	SMS/CWJ
BRANCH MANAGER	WRB
CHIEF ENG/ARCH	JWJ
FIRE PROTECTION	HPN

DEPARTMENT OF THE NAVY
NAVAL FACILITIES ENGINEERING SYSTEMS COMMAND
MID-ATLANTIC
NAVAL FACILITIES ENGINEERING SYSTEMS COMMAND - MID-ATLANTIC
NAVAL STATION - NORFOLK, VA
NAVAL SUBMARINE BASE NEW LONDON
GROTON, CONNECTICUT
P-1102 WEAPONS MAGAZINE & ORDNANCE OPERATIONS FACILITY
TYPE G MAGAZINE

ELECTRICAL DETAILS - SITE ADAPTED

SCALE:	NONE
EPROJECT NO.:	1667770
CONSTR. CONTR. NO.	
NAVFAC DRAWING NO.	12894220
SHEET	68 OF 91

E-503S

FILE NAME: C:\pw_workdir\dms0033\jacg_philiijh\d1711378\E-503S.dwg LAYOUT NAME: E-503 - ELECTRICAL DETAILS PLOTTED: Thursday, June 12, 2025 - 12:14pm USER: PHILLIJH

E-503S.dwg

FDZE1628

THESE DRAWINGS HAVE BEEN ADAPTED FROM APPROVED NAVFAC MUNITIONS STORAGE CONSTRUCTION DOCUMENTS. NAVFAC DRAWING NUMBERS 14145654 TO 14145739, APPROVED BY DDESB ON 24 SEPT 2024. JACOBS DOR RESPONSIBILITY AND SEAL APPLICABILITY IS LIMITED TO THE SITE ADAPTATIONS AND MODIFICATIONS MADE TO THIS DRAWING.

ORIGINAL STANDARD DRAWING IS NAVFAC DRAWING NUMBER 14145720 SHT 67 OF 86

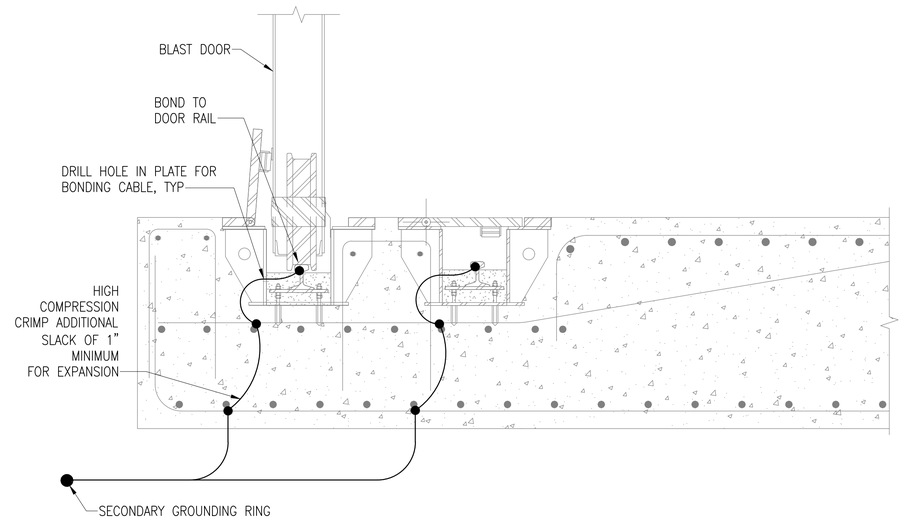

C3 DOOR RAIL BONDING DETAIL (TYPICAL)

SCALE: NO SCALE (EG101S, EG201S)

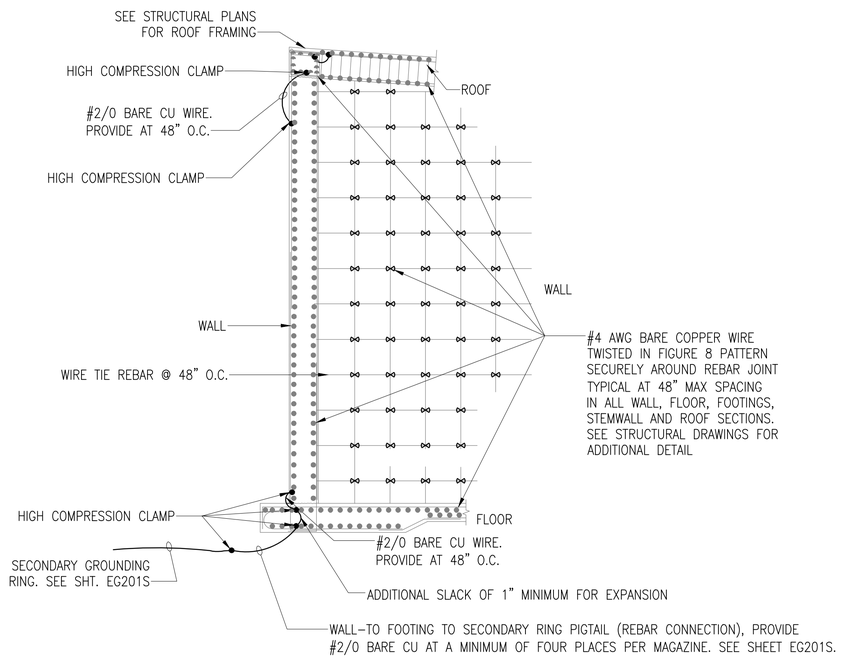

A1 WALL/FLOOR/ROOF BONDING DETAIL (TYPICAL)

SCALE: NO SCALE (EG101S)

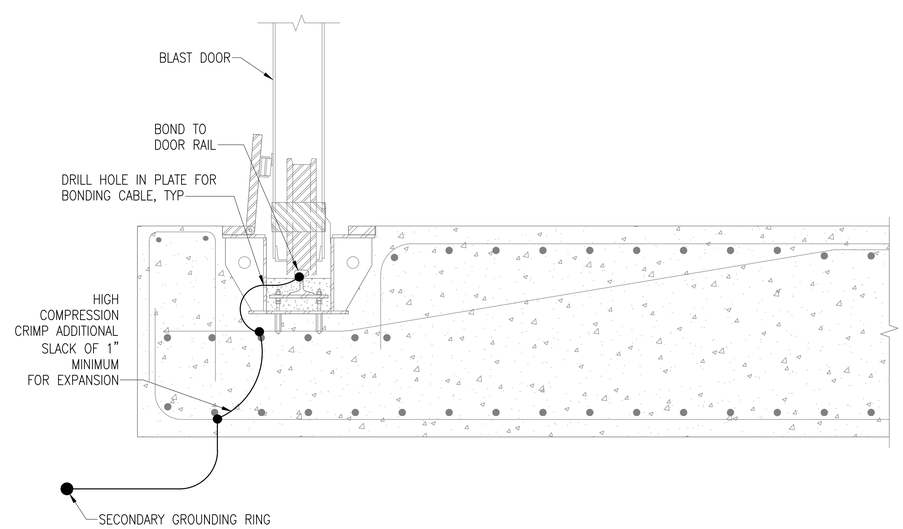

A3 DOOR RAIL BONDING DETAIL (TYPICAL)

SCALE: NO SCALE (EG101S, EG201S)

SYM	DESCRIPTION	DATE	APPR.

NAVFAC

COMMONWEALTH OF VIRGINIA
KELLEY BOURASSA
Lic. No. 0402061759
6/23/2025
PROFESSIONAL ENGINEER
SEAL

Jacobs
1100 NORTH GLEBE ROAD
SUITE 500
ARLINGTON, VIRGINIA 22201
571.218.1000
FAX: 571.218.1600
A/E INFO

APPROVED
FOR COMMANDER NAVFAC 8/14/2025

ACTIVITY
APPROVED BY LCDR ELIZABETH OLOKODE NAVFAC NLON FEAD DIRECTOR NEW LONDON, GROTON, CT
SATISFACTORY TO DATE 05/27/2025

DES	JP	DRW JP	CHK KB
PM/DM			SMS/CWJ
BRANCH MANAGER			WRB
CHIEF ENG/ARCH			JWJ
FIRE PROTECTION			HPN

DEPARTMENT OF THE NAVY
NAVAL FACILITIES ENGINEERING SYSTEMS COMMAND
MID-ATLANTIC
NAVAL FACILITIES ENGINEERING SYSTEMS COMMAND - MID-ATLANTIC
NAVAL STATION - NORFOLK, VA
NAVAL SUBMARINE BASE NEW LONDON
GROTON, CONNECTICUT
P-1102 WEAPONS MAGAZINE & ORDNANCE OPERATIONS FACILITY
TYPE G MAGAZINE
ELECTRICAL DETAILS - SITE ADAPTED

SCALE: NONE
EPROJECT NO.: 1667770
CONSTR. CONTR. NO.
NAVFAC DRAWING NO. 12894221
SHEET 69 OF 91
E-504S

FDZE1628

FILE NAME: C:\pw_workdir\dms0033\jrg_philijh\d1711378\E-504S.dwg LAYOUT NAME: E-504 - ELECTRICAL DETAILS PLOTTED: Thursday, June 12, 2025 - 12:15pm USER: PHILLIJH

E-504S.dwg

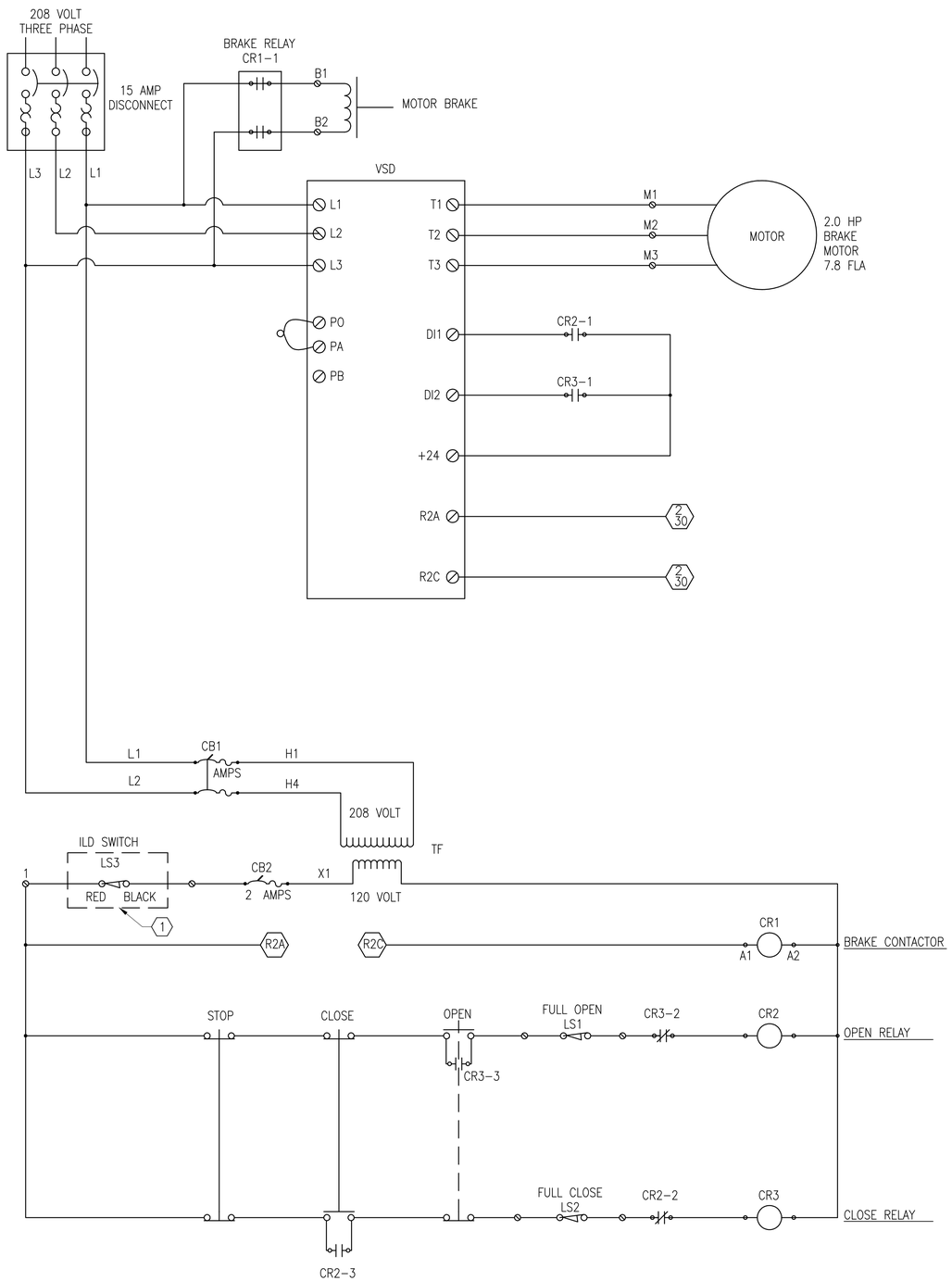

A1 DOOR CONTROL DIAGRAM

SCALE: NO SCALE (E-101S)

GENERAL ELECTRICAL NOTES:

1. RIGID METAL CONDUIT TO BE USED.
2. LIQUID TIGHT FLEXIBLE METAL CONDUIT ALLOWED UP TO 3'-0" WHERE NECESSARY.
3. COMPONENTS MUST BE NON-HAZARDOUS.

ITEM	DESCRIPTION
ENCLOSURE	NEMA 4/12 ENCLOSURE
VSD	VARIABLE SPEED DRIVE - 2HP
TF	208 X 120 TRANSFORMER
CR1	5 POLE CONTROL RELAY
CR2, CR3	DPDT RELAY
CB1	2P 1AMP CIRCUIT BREAKER
CB2	1P 2AMP CIRCUIT BREAKER
LS1,LS2	LIMIT SWITCHES
EXT. ENCLOSURE	NEMA 4/12 ENCLOSURE
EXT. OPEN PB	OPEN LEGEND
EXT. CLOSE PB	CLOSE LEGEND
LS3	LIMIT SWITCHES LOCATED INSIDE ILD BOLTWORKS

THESE DRAWINGS HAVE BEEN ADAPTED FROM APPROVED NAVFAC MUNITIONS STORAGE CONSTRUCTION DOCUMENTS, NAVFAC DRAWING NUMBERS 14145654 TO 14145739, APPROVED BY DDESB ON 24 SEPT 2024. JACOBS DOR RESPONSIBILITY AND SEAL APPLICABILITY IS LIMITED TO THE SITE ADAPTATIONS AND MODIFICATIONS MADE TO THIS DRAWING.

ORIGINAL STANDARD DRAWING IS NAVFAC DRAWING NUMBER 14145721 SHT 68 OF 86

SHEET NOTES

1. THE DOOR CONTROL DIAGRAM IS A TYPICAL DOOR STANDARD DESIGN AND SHOWN AS SCHEMATIC DESIGN ONLY. CONTRACTOR WILL COORDINATE WITH DOOR MANUFACTURER FOR SPECIFIC DESIGN APPLICABLE TO LOCAL CODES AND ORDINANCES.
2. PROVIDE A MINIMUM NEMA 4X ENCLOSURE FOR ALL ELECTRICAL EQUIPMENT LOCATED OUTDOOR.
3. THIS DETAIL REPRESENTS TO CONTROL EACH DOOR AS INDEPENDENTLY.

KEYED NOTES

1. THE RELAY WILL BE INTERLOCKED WITH ILD LOCKING SYSTEM SO THAT DOOR POWER WILL BE DISCONNECTED WHEN ILD IS IN 'CLOSE' POSITION OR IN 'LOCKING' POSITION. CONTRACTOR MUST COORDINATE WITH LOCAL AHJ FOR ADDITIONAL REQUIREMENT ON ILD SYSTEM CONNECTION. REFER TO KEYED NOTE 2/T-101S FOR ADDITIONAL INFORMATION.

SYM	DESCRIPTION	DATE	APPR

NAVFAC

COMMONWEALTH OF VIRGINIA
KELLEY BOURASSA
LIC. NO. 0402061759
6/23/2025
PROFESSIONAL ENGINEER
SEAL

Jacobs
1100 NORTH GLEBE ROAD
SUITE 500
ARLINGTON, VIRGINIA 22201
571.218.1000
FAX: 571.218.1600
A/E INFO

APPROVED
FOR COMMANDER NAVFAC 8/14/2025

ACTIVITY
APPROVED BY LCDR ELIZABETH
OLOKODE NAVFAC NLON FEAD
DIRECTOR NEW LONDON, GROTON, CT
SATISFACTORY TO DATE 05/27/2025

DES	JP	DRW	JP
CHK	KB		
PM/DM	SMS/CWJ		
BRANCH MANAGER	WRB		
CHIEF ENG/ARCH	JWJ		
FIRE PROTECTION	HPN		

DEPARTMENT OF THE NAVY
NAVAL FACILITIES ENGINEERING SYSTEMS COMMAND
MID-ATLANTIC
NAVAL FACILITIES ENGINEERING SYSTEMS COMMAND - MID-ATLANTIC
NAVAL STATION - NORFOLK, VA
NAVAL SUBMARINE BASE NEW LONDON
GROTON, CONNECTICUT
P-1102 WEAPONS MAGAZINE & ORDNANCE OPERATIONS FACILITY
TYPE G MAGAZINE

ELECTRICAL DETAILS - SITE ADAPTED

SCALE: NONE
EPROJECT NO.: 1667770
CONSTR. CONTR. NO.
NAVFAC DRAWING NO. 12894222
SHEET 70 OF 91

E-505S

FDZE1628

E-505S.dwg

FILE NAME: C:\pw_workdir\dms0033\jcvg_philijh\d1711378\E-505S.dwg LAYOUT NAME: E-505 - ELECTRICAL DETAILS PLOTTED: Thursday, June 12, 2025 - 12:12pm USER: PHILLIJH

SEE SHEET E-513S FOR SHEET AND KEYED NOTES.

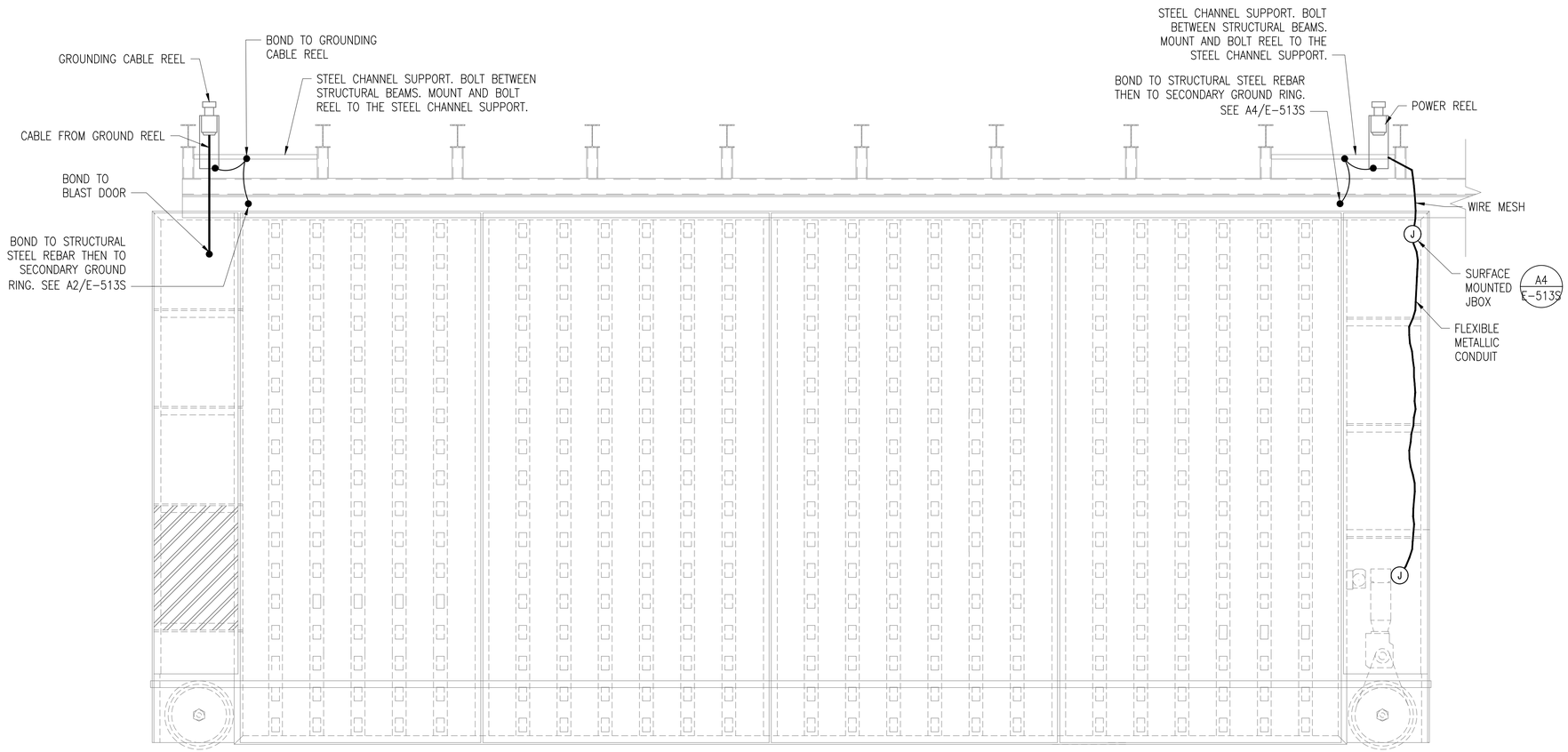

B1 DOOR EXTERIOR PLATE ELEVATION

SCALE: NO SCALE

THESE DRAWINGS HAVE BEEN ADAPTED FROM APPROVED NAVFAC MUNITIONS STORAGE CONSTRUCTION DOCUMENTS, NAVFAC DRAWING NUMBERS 14145654 TO 14145739, APPROVED BY DDESB ON 24 SEPT 2024. JACOBS DOR RESPONSIBILITY AND SEAL APPLICABILITY IS LIMITED TO THE SITE ADAPTATIONS AND MODIFICATIONS MADE TO THIS DRAWING.

ORIGINAL STANDARD DRAWING IS NAVFAC DRAWING NUMBER 14145722 SHT 69 OF 86

SYM	DESCRIPTION	DATE	APPR

NAVFAC

COMMONWEALTH OF VIRGINIA
KELLEY BOURASSA
LIC. NO. 0402061759
6/23/2025
PROFESSIONAL ENGINEER
SEAL

Jacobs
1100 NORTH GLEBE ROAD
SUITE 500
ARLINGTON, VIRGINIA 22201
571.218.1000
FAX: 571.218.1600

A/E INFO

APPROVED
FOR COMMANDER NAVFAC 8/14/2025

ACTIVITY
APPROVED BY LCDR ELIZABETH OLOKODE NAVFAC NLON FEAD DIRECTOR NEW LONDON, GROTON, CT
SATISFACTORY TO DATE 05/27/2025

DES	JP	DRW	JP	CHK	KB
PM/DM	SMS/CWJ				
BRANCH MANAGER	WRB				
CHIEF ENG/ARCH	JWJ				
FIRE PROTECTION	HPN				

DEPARTMENT OF THE NAVY
NAVAL FACILITIES ENGINEERING SYSTEMS COMMAND
MID-ATLANTIC
NAVAL FACILITIES ENGINEERING SYSTEMS COMMAND - MID-ATLANTIC
NAVAL STATION - NORFOLK, VA
NAVAL SUBMARINE BASE NEW LONDON
GROTON, CONNECTICUT
P-1102 WEAPONS MAGAZINE & ORDNANCE OPERATIONS FACILITY
TYPE G MAGAZINE

ELECTRICAL DETAILS - SITE ADAPTED

SCALE: NONE
EPROJECT NO.: 1667770
CONSTR. CONTR. NO.
NAVFAC DRAWING NO. 12894223
SHEET 71 OF 91

E-506S

FDZE1628 E-506S.dwg

FILE NAME: c:\pw_workdir\dms0033\prj_phillijh\d1711378\E-506S.dwg LAYOUT NAME: E-506 - ELECTRICAL DETAILS PLOTTED: Thursday, June 12, 2025 - 12:23pm USER: PHILLIJH

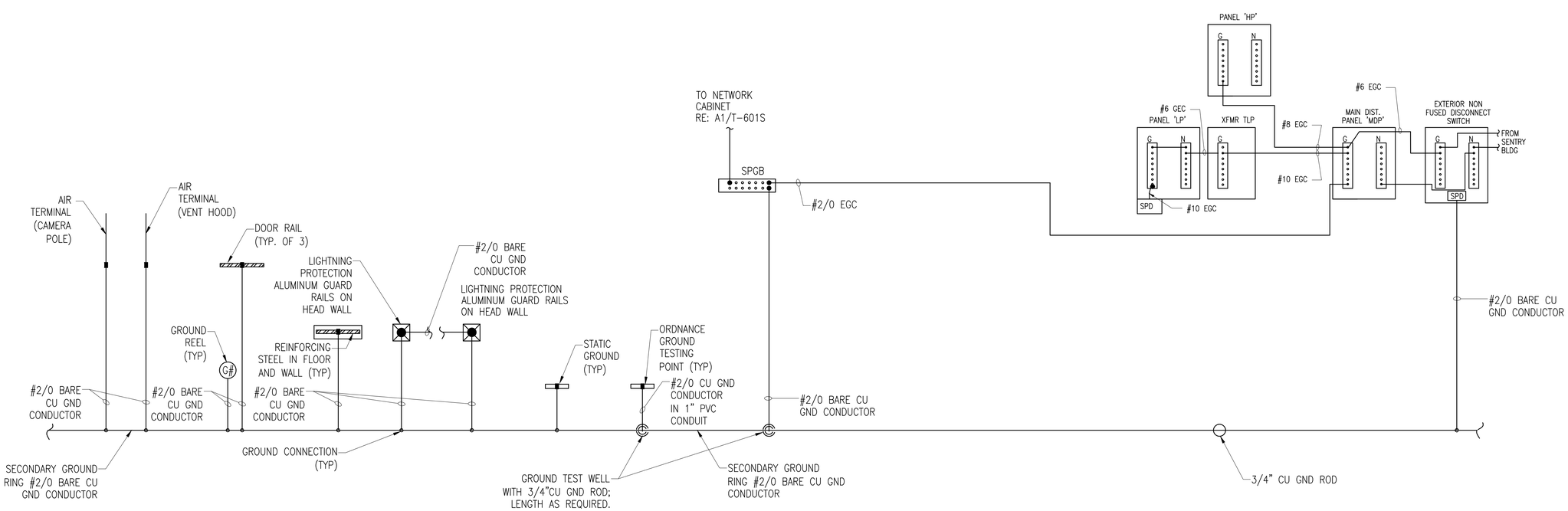

A1

GROUNDING ELECTRODE SYSTEM (TYPICAL FOR EACH MAGAZINE)

SCALE: NO SCALE

NOTE: ALL GROUNDS MUST IN COMPLIANCE WITH NEC, NFPA 780, AND OP5 REQUIREMENTS AND BONDED IN THROUGH SECONDARY GROUND RING.

THESE DRAWINGS HAVE BEEN ADAPTED FROM APPROVED NAVFAC MUNITIONS STORAGE CONSTRUCTION DOCUMENTS, NAVFAC DRAWING NUMBERS 14145654 TO 14145739, APPROVED BY DDESB ON 24 SEPT 2024. JACOBS DOR RESPONSIBILITY AND SEAL APPLICABILITY IS LIMITED TO THE SITE ADAPTATIONS AND MODIFICATIONS MADE TO THIS DRAWING.

ORIGINAL STANDARD DRAWING IS NAVFAC DRAWING NUMBER 14145723 SHT 70 OF 86

SYM	DESCRIPTION	DATE	APPR.

NAVFAC

COMMONWEALTH OF VIRGINIA
KELLEY BOURASSA
Lic. No. 0402061759
6/23/2025
PROFESSIONAL ENGINEER
SEAL

Jacobs
1100 NORTH GLEBE ROAD
SUITE 500
ARLINGTON, VIRGINIA 22201
571.218.1000
FAX: 571.218.1600
A/E INFO

APPROVED
FOR COMMANDER NAVFAC 8/14/2025
ACTIVITY
APPROVED BY LCDR ELIZABETH OLOKODE NAVFAC NLON FEAD DIRECTOR NEW LONDON, GROTON, CT
SATISFACTORY TO DATE 05/27/2025

DES	JP	DRW JP	CHK KB
PM/DM	SMS/CWJ		
BRANCH MANAGER	WRB		
CHIEF ENG/ARCH	JWJ		
FIRE PROTECTION	HPN		

DEPARTMENT OF THE NAVY
NAVAL FACILITIES ENGINEERING SYSTEMS COMMAND
MID-ATLANTIC
NAVAL FACILITIES ENGINEERING SYSTEMS COMMAND - MID-ATLANTIC
NAVAL STATION - NORFOLK, VA
NAVAL SUBMARINE BASE NEW LONDON
GROTON, CONNECTICUT
P-1102 WEAPONS MAGAZINE & ORDNANCE OPERATIONS FACILITY
TYPE G MAGAZINE
ELECTRICAL DETAILS - SITE ADAPTED

SCALE: NONE
EPROJECT NO.: 1667770
CONSTR. CONTR. NO.
NAVFAC DRAWING NO.
12894224
SHEET 72 OF 91
E-507S

FDZE1628

E-507S.dwg

FILE NAME: C:\pw_workdir\dms0033\jpng_phililjh\d1711378\E-507S.dwg LAYOUT NAME: E-507 - ELECTRICAL DETAILS PLOTTED: Thursday, June 12, 2025 - 12:23pm USER: PHILLIJH

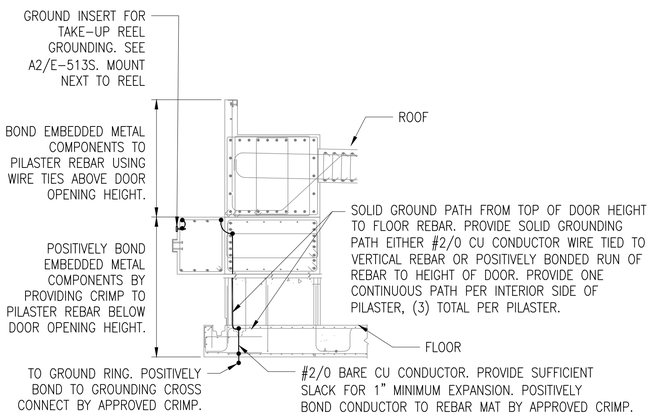

C1 PILASTER GROUNDING AND BONDING DETAIL

SCALE: NO SCALE (EG101S, EG201S)

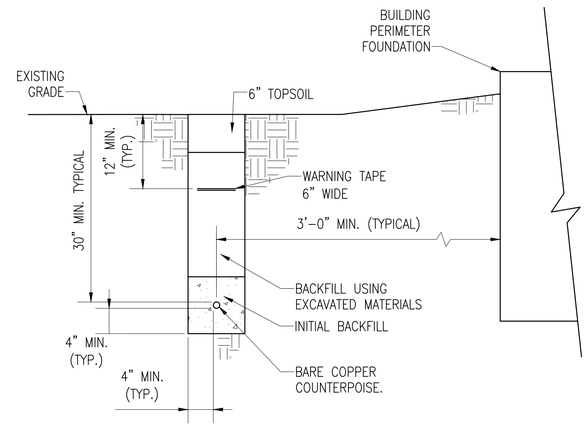

C2 TYPICAL GROUND RING INSTALLATION DETAIL

SCALE: NO SCALE (EG101S)

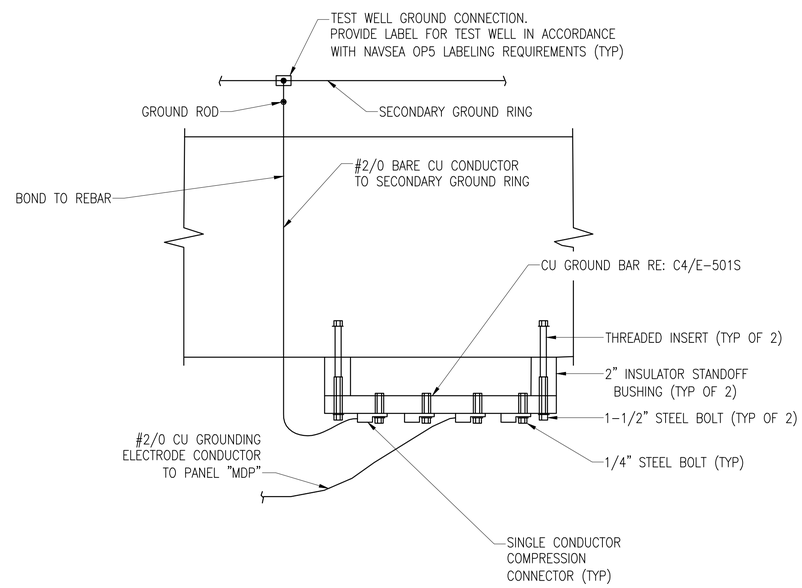

A3 SINGLE POINT GROUND BAR DETAIL (SPGB)

SCALE: NO SCALE (EG101S, E-101S)

THESE DRAWINGS HAVE BEEN ADAPTED FROM APPROVED NAVFAC MUNITIONS STORAGE CONSTRUCTION DOCUMENTS, NAVFAC DRAWING NUMBERS 14145654 TO 14145739, APPROVED BY DDESB ON 24 SEPT 2024. JACOBS DOR RESPONSIBILITY AND SEAL APPLICABILITY IS LIMITED TO THE SITE ADAPTATIONS AND MODIFICATIONS MADE TO THIS DRAWING.

ORIGINAL STANDARD DRAWING IS NAVFAC DRAWING NUMBER 14145724 SHT 71 OF 86

SYM	DESCRIPTION	DATE	APPR.

NAVFAC

COMMONWEALTH OF VIRGINIA
KELLEY BOURASSA
LIC. NO. 0402061759
6/23/2025
PROFESSIONAL ENGINEER
SEAL

Jacobs
1100 NORTH GLEBE ROAD
SUITE 500
ARLINGTON, VIRGINIA 22201
571.218.1000
FAX: 571.218.1600
A/E INFO

APPROVED
FOR COMMANDER NAVFAC 8/14/2025

ACTIVITY
APPROVED BY LCDR ELIZABETH OLOKODE NAVFAC NLON FEAD DIRECTOR NEW LONDON, GROTON, CT
SATISFACTORY TO DATE 05/27/2025

DES	JP	DRW JP	CHK KB
PM/DM	SMS/CWJ		
BRANCH MANAGER	WRB		
CHIEF ENG/ARCH	JWJ		
FIRE PROTECTION	HPN		

DEPARTMENT OF THE NAVY
NAVAL FACILITIES ENGINEERING SYSTEMS COMMAND
MID-ATLANTIC
NAVAL FACILITIES ENGINEERING SYSTEMS COMMAND - MID-ATLANTIC
NAVAL STATION - NORFOLK, VA
NAVAL SUBMARINE BASE NEW LONDON
GROTON, CONNECTICUT
P-1102 WEAPONS MAGAZINE & ORDNANCE OPERATIONS FACILITY
TYPE G MAGAZINE

ELECTRICAL DETAILS - SITE ADAPTED

SCALE: NONE
EPROJECT NO.: 1667770
CONSTR. CONTR. NO.
NAVFAC DRAWING NO. 12894225
SHEET 73 OF 91

E-508S

FDZE1628

E-508S.dwg

FILE NAME: C:\pw_work\dir\des003\jrg_philijh\d1711378\E-508S.dwg LAYOUT NAME: E-508 - ELECTRICAL DETAILS PLOTTED: Thursday, June 12, 2025 - 12:22pm USER: PHILLIJH

NOTES:

1. PROVIDE EXOTHERMIC WELD BONDING TECHNIQUE FOR LIGHTNING PROTECTION GROUNDING CONDUCTORS OR GROUNDING ELECTRODES THAT ARE BURIED, CONCEALED WITHIN THE STRUCTURE OR AT OTHER PERMANENT LOCATIONS. PERMANENT LOCATIONS ARE DEFINED AS THOSE LOCATIONS WHERE THE BOND IS NOT EASILY ACCESSIBLE FOR VISUAL INSPECTION OR MAINTENANCE. HIGH COMPRESSION CLAMPS ARE PERMITTED FOR NON-PERMANENT LOCATIONS.
2. CABLE SPLICE OR OTHER BONDING CONNECTORS MUST BE INSTALLED PER ITS LABEL REQUIREMENTS AND WITH AN APPROVED UL96 LISTING.

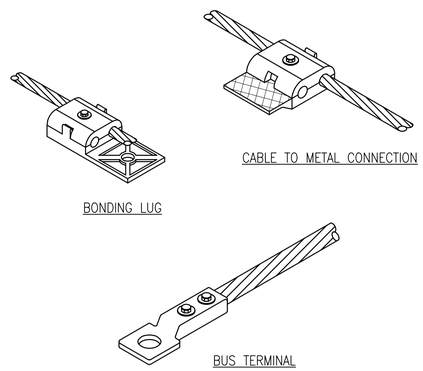

C2 TYPICAL CABLE TERMINATIONS / CONNECTIONS DETAIL
SCALE: NO SCALE

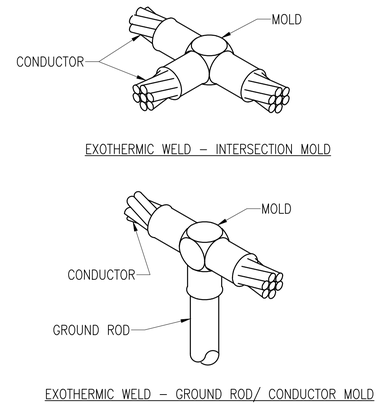

C3 TYPICAL CABLE EXOTHERMIC WELD DETAIL
SCALE: NO SCALE

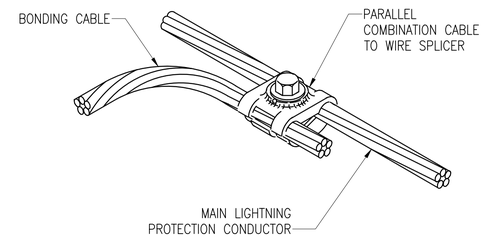

C4 TYPICAL CABLE SPLICE DETAIL
SCALE: NO SCALE

THESE DRAWINGS HAVE BEEN ADAPTED FROM APPROVED NAVFAC MUNITIONS STORAGE CONSTRUCTION DOCUMENTS, NAVFAC DRAWING NUMBERS 14145654 TO 14145739, APPROVED BY DDESB ON 24 SEPT 2024. JACOBS DOR RESPONSIBILITY AND SEAL APPLICABILITY IS LIMITED TO THE SITE ADAPTATIONS AND MODIFICATIONS MADE TO THIS DRAWING.

ORIGINAL STANDARD DRAWING IS NAVFAC DRAWING NUMBER 14145725 SHT 72 OF 86

SYM	DESCRIPTION	DATE	APPR.

NAVFAC

COMMONWEALTH OF VIRGINIA
KELLEY BOURASSA
Lic. No. 0402061759
6/23/2025
PROFESSIONAL ENGINEER
SEAL

Jacobs
1100 NORTH GLEBE ROAD
SUITE 500
ARLINGTON, VIRGINIA 22201
571.218.1000
FAX: 571.218.1600
A/E INFO

APPROVED
FOR COMMANDER NAVFAC 8/14/2025

ACTIVITY
APPROVED BY LCDR ELIZABETH OLOKODE NAVFAC NLON FEAD DIRECTOR NEW LONDON, GROTON, CT

SATISFACTORY TO DATE 05/27/2025

DES	JP	DRW	JP
CHK	KB		
PM/DM	SMS/CWJ		
BRANCH MANAGER	WRB		
CHIEF ENG/ARCH	JWJ		
FIRE PROTECTION	HPN		

DEPARTMENT OF THE NAVY
NAVAL FACILITIES ENGINEERING SYSTEMS COMMAND
MID-ATLANTIC
NAVAL FACILITIES ENGINEERING SYSTEMS COMMAND - MID-ATLANTIC
NAVAL STATION - NORFOLK, VA
NAVAL SUBMARINE BASE NEW LONDON
GROTON, CONNECTICUT
P-1102 WEAPONS MAGAZINE & ORDNANCE OPERATIONS FACILITY
TYPE G MAGAZINE
ELECTRICAL DETAILS - SITE ADAPTED

SCALE: NONE
EPROJECT NO.: 1667770
CONSTR. CONTR. NO.
NAVFAC DRAWING NO. 12894226
SHEET 74 OF 91
E-509S

E-509S.dwg
FDZE1628

FILE NAME: C:\pw_work\dr\dev003\jrg_philijh\d1711378\E-509S.dwg LAYOUT NAME: E-509 – ELECTRICAL DETAILS PLOTTED: Thursday, June 12, 2025 – 12:21pm USER: PHILLIJH

NOTES:
1. CONCEAL GROUNDING CONDUCTORS WHERE POSSIBLE.
2. FOR GROUNDING CONDUCTORS RUN EXPOSED, SUPPORT CONDUCTORS 36" ON CENTERS AND WITHIN 12" OF GROUND CONNECTIONS.
3. PROVIDE WALL FASTENER IN ACCORDANCE WITH THE WALL TYPE SEE "SIDE VIEW DETAILS" FOR REQUIREMENTS.
4. THIS GROUNDING DETAIL IS NOT FOR ORDNANCE GROUNDING SYSTEM.

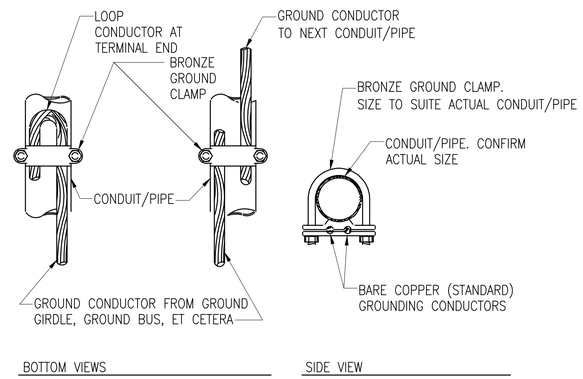

C2 CONDUIT/PIPE GROUND CONNECTION
SCALE: NO SCALE

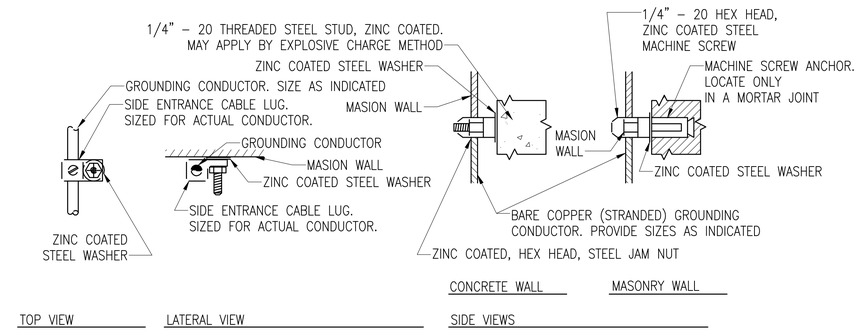

C4 GROUNDING CONDUCTOR SUPPORT DETAIL (TYPICAL FOR EXPOSED CONDUCTORS)
SCALE: NO SCALE

THESE DRAWINGS ARE AN EXACT REPLICA OF THE STANDARD MAGAZINE TYPE 'G' PROVIDED BY NAVFAC. THE DESIGN WILL BE SITE ADAPTED AND MODIFIED TO MEET THE SPECIFIC GEOTECHNICAL AND LOADING CONDITIONS SPECIFIC TO NAVAL SUBMARINE BASE NEW LONDON, GROTON, CONNECTICUT.

ORIGINAL STANDARD DRAWING IS NAVFAC DRAWING NUMBER 14145726 SHT 73 OF 86

SYM	DESCRIPTION	DATE	APPR

NAVFAC

SEAL

Jacobs
1100 NORTH GLEBE ROAD
SUITE 500
ARLINGTON, VIRGINIA 22201
571.218.1000
FAX: 571.218.1600

A/E INFO

APPROVED
FOR COMMANDER NAVFAC 8/14/2025

ACTIVITY
APPROVED BY LCDR ELIZABETH OLOKODE NAVFAC NLON FEAD DIRECTOR NEW LONDON, GROTON, CT

SATISFACTORY TO DATE 05/27/2025

DES	KL	DRW FO	CHK PKD
PM/DM	SDS/RSF		
BRANCH MANAGER	WRB		
CHIEF ENG/ARCH	JWJ		
FIRE PROTECTION	HPN		

DEPARTMENT OF THE NAVY
NAVAL FACILITIES ENGINEERING SYSTEMS COMMAND
MID-ATLANTIC
NAVAL FACILITIES ENGINEERING SYSTEMS COMMAND - MID-ATLANTIC
NAVAL STATION - NORFOLK, VA
NAVAL SUBMARINE BASE NEW LONDON
GROTON, CONNECTICUT
P-1102 WEAPONS MAGAZINE & ORDINANCE OPERATIONS FACILITY
TYPE G BOX MAGAZINE
ELECTRICAL DETAILS

SCALE: NOT TO SCALE
EPROJECT NO.: 1667770
CONSTR. CONTR. NO.
NAVFAC DRAWING NO. 12894227
SHEET 75 OF 91
E-510

FILE NAME: C:\pw_workdir\dms0033\jwj_philijh\d1711378\E-510.dwg LAYOUT NAME: E-510 – ELECTRICAL DETAILS PLOTTED: Thursday, June 12, 2025 – 12:20pm USER: PHILLIJH

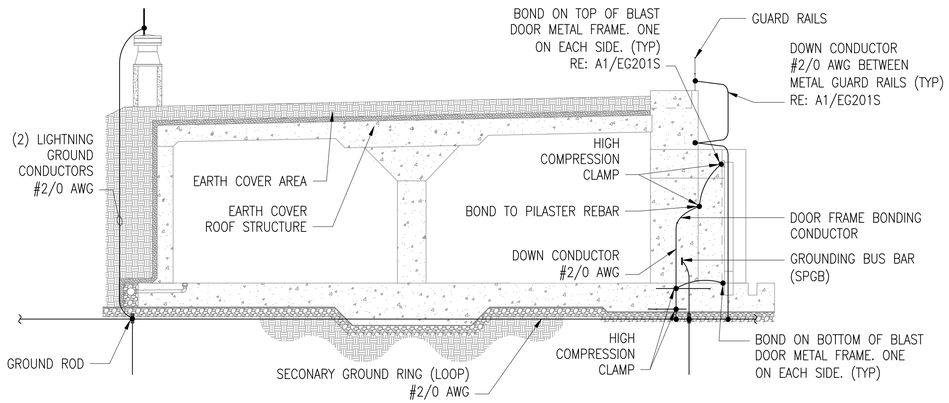

NOTES:
1. FOR MISCELLANEOUS STEEL SHAPES, BOLTED CONNECTOR MAY BE USED.
2. CRIMPED CONNECTORS MAY ALSO BE ANOTHER ALTERNATE CONNECTORS.

C1 ECM GROUND SECTION (TYPICAL)
SCALE: NO SCALE (EG101S, EG201S)

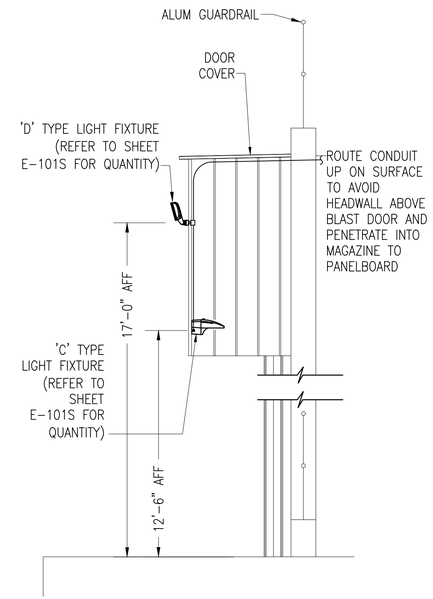

C4 EXTERIOR WALL MOUNTED LIGHTING
SCALE: NO SCALE

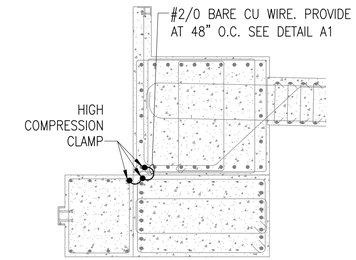

D5 HEADER BEAM END - BONDING DETAIL
SCALE: NO SCALE

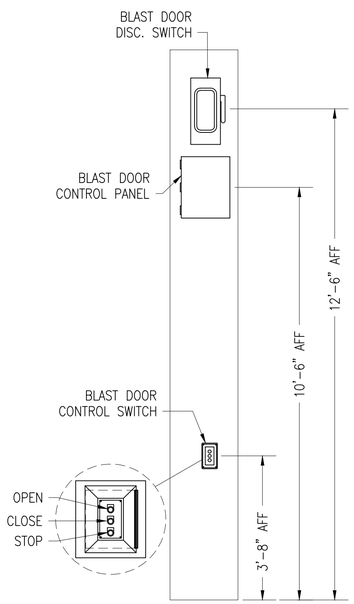

A1 DOOR CONTROL RISER (TYPICAL)
SCALE: NO SCALE (E-101S)

THESE DRAWINGS HAVE BEEN ADAPTED FROM APPROVED NAVFAC MUNITIONS STORAGE CONSTRUCTION DOCUMENTS, NAVFAC DRAWING NUMBERS 14145654 TO 14145739, APPROVED BY DDESB ON 24 SEPT 2024. JACOBS DOR RESPONSIBILITY AND SEAL APPLICABILITY IS LIMITED TO THE SITE ADAPTATIONS AND MODIFICATIONS MADE TO THIS DRAWING.

ORIGINAL STANDARD DRAWING IS NAVFAC DRAWING NUMBER 14145727 SHT 74 OF 86

SYM	DESCRIPTION	DATE	APPR

NAVFAC

COMMONWEALTH OF VIRGINIA
KELLEY BOURASSA
LIC. NO. 0402061759
6/23/2025
PROFESSIONAL ENGINEER
SEAL

Jacobs
1100 NORTH GLEBE ROAD
SUITE 500
ARLINGTON, VIRGINIA 22201
571.218.1000
FAX: 571.218.1600

A/E INFO

APPROVED
FOR COMMANDER NAVFAC 8/14/2025

ACTIVITY
APPROVED BY LCDR ELIZABETH
OLOKODE NAVFAC NLON FEAD
DIRECTOR NEW LONDON, GROTON, CT

SATISFACTORY TO DATE 05/27/2025

DES	JP	DRW	JP	CHK	KB
PM/DM					SMS/CWJ
BRANCH MANAGER					WRB
CHIEF ENG/ARCH					JWJ
FIRE PROTECTION					HPN

DEPARTMENT OF THE NAVY
NAVAL FACILITIES ENGINEERING SYSTEMS COMMAND
MID-ATLANTIC

NAVAL FACILITIES ENGINEERING SYSTEMS COMMAND - MID-ATLANTIC
NAVAL STATION - NORFOLK, VA

NAVAL SUBMARINE BASE NEW LONDON
GROTON, CONNECTICUT
P-1102 WEAPONS MAGAZINE & ORDNANCE OPERATIONS FACILITY
TYPE G MAGAZINE

ELECTRICAL DETAILS - SITE ADAPTED

SCALE: NONE
EPROJECT NO.: 1667770
CONSTR. CONTR. NO.
NAVFAC DRAWING NO.
12894228
SHEET 76 OF 91
E-511S

FDZE1628
E-511S.dwg

FILE NAME: C:\pw_workdir\dms0033\jwg_philijh\d1711378\E-511S.dwg LAYOUT NAME: E-511 - ELECTRICAL DETAILS PLOTTED: Thursday, June 12, 2025 - 12:32pm USER: PHILLIJH

THESE DRAWINGS HAVE BEEN ADAPTED FROM APPROVED NAVFAC MUNITIONS STORAGE CONSTRUCTION DOCUMENTS, NAVFAC DRAWING NUMBERS 14145654 TO 14145739, APPROVED BY ODESB ON 24 SEPT 2024. JACOBS DOR RESPONSIBILITY AND SEAL APPLICABILITY IS LIMITED TO THE SITE ADAPTATIONS AND MODIFICATIONS MADE TO THIS DRAWING.

ORIGINAL STANDARD DRAWING IS NAVFAC DRAWING NUMBER 14145729 SHT 76 OF 86

SHEET NOTES

1. PROVIDE A MINIMUM NEMA 4X ENCLOSURE FOR ALL ELECTRICAL EQUIPMENT LOCATED OUTDOOR.

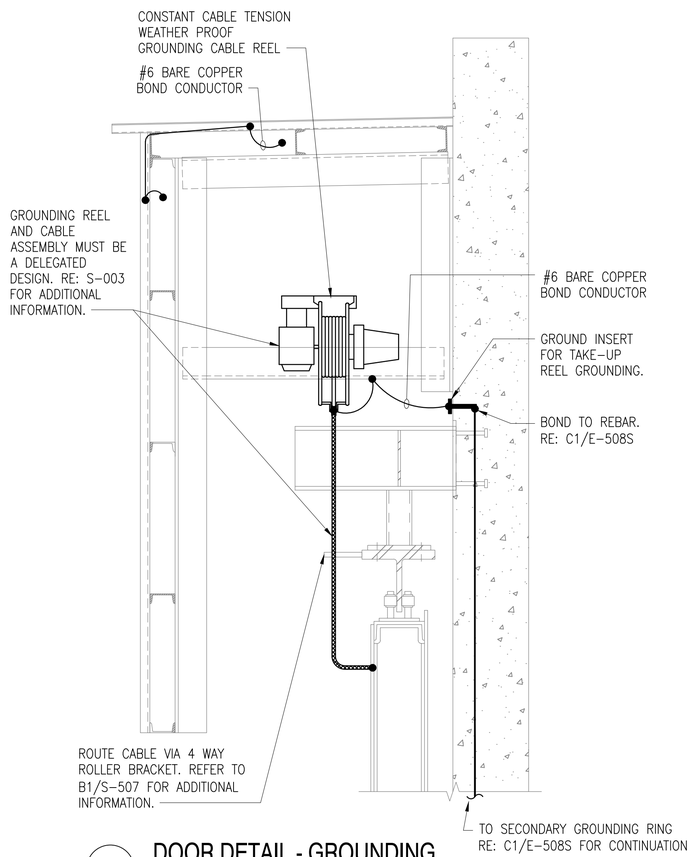

A2 DOOR DETAIL - GROUNDING
SCALE: NO SCALE (EG101S, EG201S)

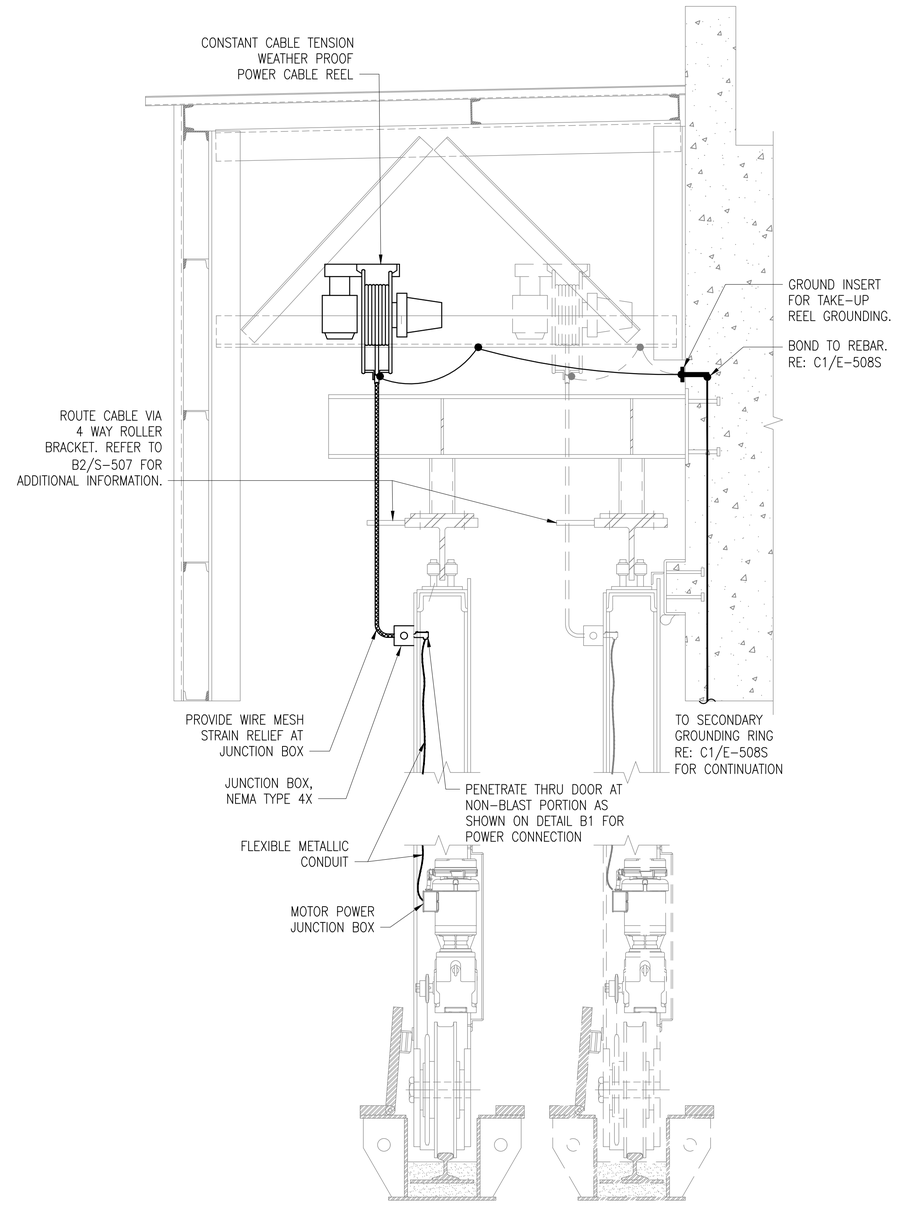

A4 DOOR DETAIL - POWER
SCALE: NO SCALE (EG101S, EG201S)

SYM	DESCRIPTION	DATE	APPR

NAVFAC

COMMONWEALTH OF VIRGINIA
KELLEY BOURASSA
LIC. NO. 040206617759
6/23/2025
PROFESSIONAL ENGINEER
SEAL

Jacobs
1100 NORTH GLEBE ROAD
SUITE 500
ARLINGTON, VIRGINIA 22201
571.218.1000
FAX: 571.218.1600
A/E INFO

APPROVED
FOR COMMANDER NAVFAC 8/14/2025

ACTIVITY
APPROVED BY LCDR ELIZABETH OLOKODE NAVFAC NLON FEAD DIRECTOR NEW LONDON, GROTON, CT
SATISFACTORY TO DATE 05/27/2025

DES	JP	DRW	JP	CHK	KB
PM/DM	SMS/CYJ				
BRANCH MANAGER	WRB				
CHIEF ENG/ARCH	JWJ				
FIRE PROTECTION	HPN				

DEPARTMENT OF THE NAVY
NAVAL FACILITIES ENGINEERING SYSTEMS COMMAND
MID-ATLANTIC
NAVAL FACILITIES ENGINEERING SYSTEMS COMMAND - MID-ATLANTIC
NAVAL STATION - NORFOLK, VA
NAVAL SUBMARINE BASE NEW LONDON
GROTON, CONNECTICUT
P-1102 WEAPONS MAGAZINE & ORDNANCE OPERATIONS FACILITY
TYPE G MAGAZINE

ELECTRICAL DETAILS - SITE ADAPTED

SCALE: NONE
EPROJECT NO.: 1667770
CONSTR. CONTR. NO.
NAVFAC DRAWING NO. 12894229
SHEET 77 OF 91

E-513S

FDZE1628

E-513S.dwg

FILE NAME: C:\pw_workdir\dms0033\acq_philijh\d1711378\E-513S.dwg LAYOUT NAME: E-513 - ELECTRICAL DETAILS PLOTTED: Thursday, June 12, 2025 - 12:29pm USER: PHILLIJH

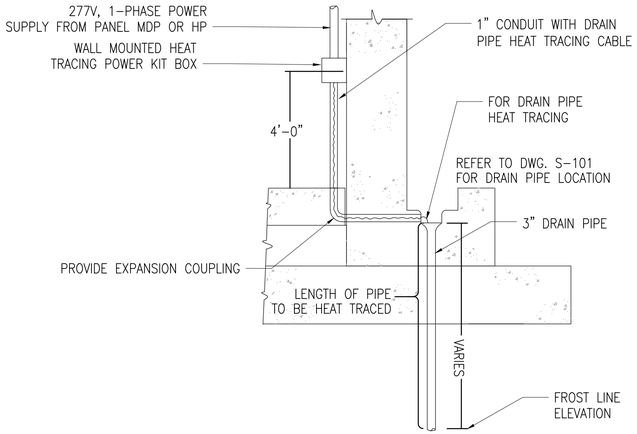

C1 DRAIN PIPE HEAT TRACING DETAIL

SCALE: NO SCALE

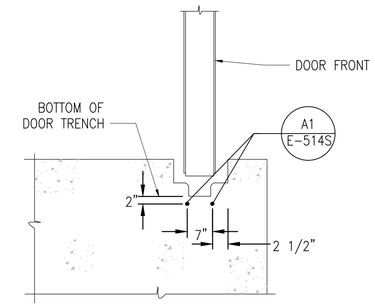

C4 HEAT TRACING CABLE DETAIL

SCALE: NO SCALE

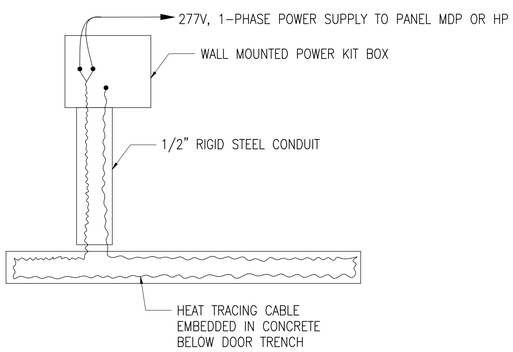

A1 TYPICAL DOOR TRENCH HEAT TRACING WIRING DETAIL

SCALE: NO SCALE

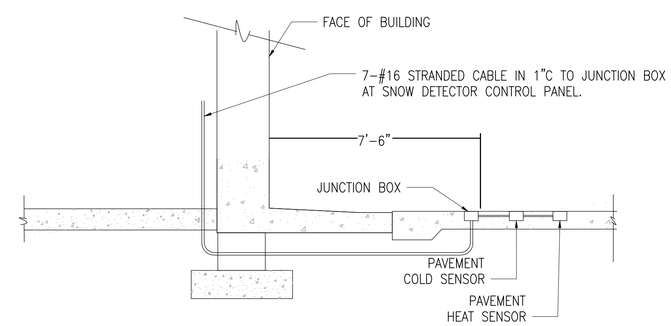

A4 SNOW DETECTOR LOCATION DETAIL

SCALE: NO SCALE

SYM	DESCRIPTION	DATE	APPR.

NAVFAC

COMMONWEALTH OF VIRGINIA
KELLEY BOURASSA
LIC. NO. 0402061759
6/23/2025
PROFESSIONAL ENGINEER
SEAL

Jacobs
1100 NORTH GLEBE ROAD
SUITE 500
ARLINGTON, VIRGINIA 22201
571.218.1000
FAX: 571.218.1600
A/E INFO

APPROVED
FOR COMMANDER NAVFAC 8/14/2025

ACTIVITY
APPROVED BY LCDR ELIZABETH OLOKODE NAVFAC NLON FEAD DIRECTOR NEW LONDON, GROTON, CT
SATISFACTORY TO DATE 05/27/2025

DES JP	DRW JP	CHK KB	
PM/DM	SMS/CWJ		
BRANCH MANAGER	WRB		
CHIEF ENG/ARCH	JWJ		
FIRE PROTECTION	HPN		

DEPARTMENT OF THE NAVY
NAVAL FACILITIES ENGINEERING SYSTEMS COMMAND
MID-ATLANTIC
NAVAL FACILITIES ENGINEERING SYSTEMS COMMAND - MID-ATLANTIC
NAVAL STATION - NORFOLK, VA
NAVAL SUBMARINE BASE NEW LONDON
GROTON, CONNECTICUT
P-1102 WEAPONS MAGAZINE & ORDNANCE OPERATIONS FACILITY
TYPE G MAGAZINE

ELECTRICAL HEAT TRACE DETAILS

SCALE: NONE
EPROJECT NO.: 1667770
CONSTR. CONTR. NO.
NAVFAC DRAWING NO. 12894230
SHEET 78 OF 91

E-514S

FDZE1628

E-514S.dwg

FILE NAME: C:\pw_workdir\dms0033\jrg_philijh\d1711378\E-514S.dwg LAYOUT NAME: E-514S - ELECTRICAL DETAILS PLOTTED: Thursday, June 12, 2025 - 12:28pm USER: PHILLJH

SEE SHEET E-602S FOR SHEET AND KEYED NOTES.

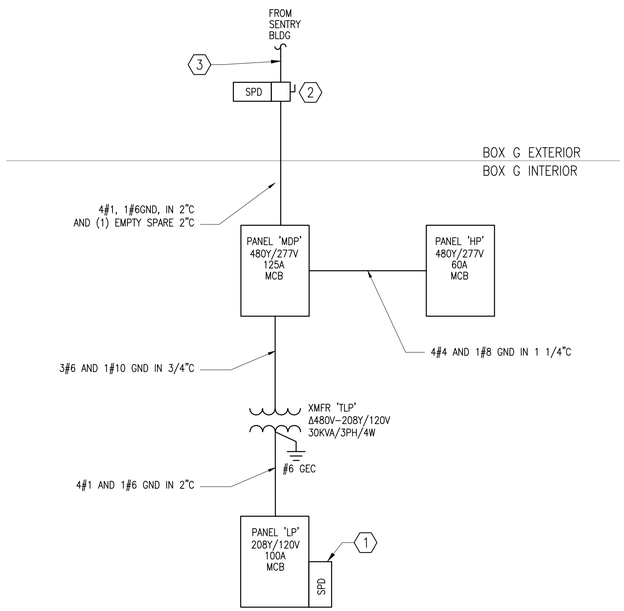

B1 ELECTRICAL ONE-LINE DIAGRAM

SCALE: NO SCALE

THESE DRAWINGS HAVE BEEN ADAPTED FROM APPROVED NAVFAC MUNITIONS STORAGE CONSTRUCTION DOCUMENTS, NAVFAC DRAWING NUMBERS 14145654 TO 14145739, APPROVED BY DDESB ON 24 SEPT 2024. JACOBS DOR RESPONSIBILITY AND SEAL APPLICABILITY IS LIMITED TO THE SITE ADAPTATIONS AND MODIFICATIONS MADE TO THIS DRAWING.

ORIGINAL STANDARD DRAWING IS NAVFAC DRAWING NUMBER 14145730 SHT 77 OF 86

SYM	DESCRIPTION	DATE	APPR

NAVFAC

COMMONWEALTH OF VIRGINIA
KELLEY BOURASSA
LIC. NO. 0402061759
6/25/2025
PROFESSIONAL ENGINEER
SEAL

Jacobs
1100 NORTH GLEBE ROAD
SUITE 500
ARLINGTON, VIRGINIA 22201
571.218.1000
FAX: 571.218.1600
A/E INFO

APPROVED
FOR COMMANDER NAVFAC 8/14/2025

ACTIVITY
APPROVED BY LCDR ELIZABETH OLOKODE NAVFAC NLON FEAD DIRECTOR NEW LONDON, GROTON, CT

SATISFACTORY TO DATE 05/27/2025

DES	JP	DRW	JP	CHK	KB
PM/DM					SMS/CWJ
BRANCH MANAGER					WRB
CHIEF ENG/ARCH					JWJ
FIRE PROTECTION					HPN

DEPARTMENT OF THE NAVY
NAVAL FACILITIES ENGINEERING SYSTEMS COMMAND
MID-ATLANTIC
NAVAL FACILITIES ENGINEERING SYSTEMS COMMAND - MID-ATLANTIC
NAVAL STATION - NORFOLK, VA
NAVAL SUBMARINE BASE NEW LONDON
GROTON, CONNECTICUT
P-1102 WEAPONS MAGAZINE & ORDNANCE OPERATIONS FACILITY
TYPE G MAGAZINE
ELECTRICAL ONE-LINE - SITE ADAPTED

SCALE: NONE
EPROJECT NO.: 1667770
CONSTR. CONTR. NO.
NAVFAC DRAWING NO. 12894231
SHEET 79 OF 91
E-601S

FDZE1628 E-601S.dwg

FILE NAME: C:\pw_work\dms\jdm0033\proj_phillip\d1711378\E-601S.dwg LAYOUT NAME: E-601 - ELECTRICAL DETAILS PLOTTED: Thursday, June 12, 2025 - 12:27pm USER: PHILLUH

SHEET NOTES

KEYED NOTES

1. PROVIDE EXTERNALLY MOUNTED SPD ON LOAD SIDE OF A DEDICATED CIRCUIT BREAKER (BREAKER SIZE AND WIRE SIZE AS RECOMMENDED BY MANUFACTURER). LOCATE AS CLOSE AS PRACTICAL TO THE BREAKER WITH A MAXIMUM LEAD OF 3FT.
2. PROVIDE 600V, 3P, 125A NON-FUSED DISCONNECT IN NEMA 4X ENCLOSURE. PROVIDE SWITCH WITH INTEGRAL SURGE PROTECTIVE DEVICE.
3. REFER TO SENTRY BUILDING ELECTRICAL DRAWINGS FOR FEEDER SIZES TO EXTERIOR DISCONNECT SWITHCES FOR EACH TYPE "G" MAGAZINE. PROVIDE (1) EMPTY SPARE 4"C FOR EACH TYPE "G" MAGAZINE.

THESE DRAWINGS HAVE BEEN ADAPTED FROM APPROVED NAVFAC MUNITIONS STORAGE CONSTRUCTION DOCUMENTS, NAVFAC DRAWING NUMBERS 14145654 TO 14145739, APPROVED BY DDESB ON 24 SEPT 2024. JACOBS DOR RESPONSIBILITY AND SEAL APPLICABILITY IS LIMITED TO THE SITE ADAPTATIONS AND MODIFICATIONS MADE TO THIS DRAWING.

ORIGINAL STANDARD DRAWING IS NAVFAC DRAWING NUMBER 14145731 SHT 78 OF 86

SYM	DESCRIPTION	DATE	APPR.

NAVFAC

COMMONWEALTH OF VIRGINIA
KELLEY BOURASSA
LIC. NO. 0402061759
6/23/2025
PROFESSIONAL ENGINEER
SEAL

Jacobs
1100 NORTH GLEBE ROAD
SUITE 500
ARLINGTON, VIRGINIA 22201
571.218.1000
FAX: 571.218.1600
A/E INFO

APPROVED
FOR COMMANDER NAVFAC 8/14/2025

ACTIVITY
APPROVED BY LCDR ELIZABETH OLOKODE NAVFAC NLON FEAD DIRECTOR NEW LONDON, GROTON, CT
SATISFACTORY TO DATE 05/27/2025

DES JP	DRW JP	CHK KB	
PM/DM	SMS/CWJ		
BRANCH MANAGER	WRB		
CHIEF ENG/ARCH	JWJ		
FIRE PROTECTION	HPN		

DEPARTMENT OF THE NAVY
NAVAL FACILITIES ENGINEERING SYSTEMS COMMAND
MID-ATLANTIC
NAVAL FACILITIES ENGINEERING SYSTEMS COMMAND - MID-ATLANTIC
NAVAL STATION - NORFOLK, VA
NAVAL SUBMARINE BASE NEW LONDON
GROTON, CONNECTICUT
P-1102 WEAPONS MAGAZINE & ORDNANCE OPERATIONS FACILITY
TYPE G MAGAZINE
ELECTRICAL ONE-LINE - SITE ADAPTED

SCALE: NONE
EPROJECT NO.: 1667770
CONSTR. CONTR. NO.
NAVFAC DRAWING NO. 12894232
SHEET 80 OF 91
E-602S

FDZE1628 E-602S.dwg

FILE NAME: C:\pw_workdir\ann003\jng_philijh\{1711378}E-602S.dwg LAYOUT NAME: E-602 - ELECTRICAL ONE-LINE PLOTTED: Thursday, June 12, 2025 - 12:26pm USER: PHILLIJH

THESE DRAWINGS HAVE BEEN ADAPTED FROM APPROVED NAVFAC MUNITIONS STORAGE CONSTRUCTION DOCUMENTS, NAVFAC DRAWING NUMBERS 14145654 TO 14145739, APPROVED BY DDESB ON 24 SEPT 2024. JACOBS DOR RESPONSIBILITY AND SEAL APPLICABILITY IS LIMITED TO THE SITE ADAPTATIONS AND MODIFICATIONS MADE TO THIS DRAWING.

ORIGINAL STANDARD DRAWING IS NAVFAC DRAWING NUMBER 14145732 SHT 79 OF 86

LIGHTING FIXTURE SCHEDULE

MARK	DESCRIPTION	MOUNTING TYPE/HEIGHT (RE: E-101S)	LAMP TYPE	INPUT VA	COLOR TEMPERATURE	CRI	VOLTAGE	LUMINAIRE PLATE NUMBER
A	LED FROSTED POLYCARBONATE ENCLOSURE 3500K 80 CRI 15000LM	STEM	LED	115 VA	3500 K	80	MVOLT	NL-11
B	LED FROSTED POLYCARBONATE ENCLOSURE 3500K 80 CRI 6000LM	SURFACE	LED	50 VA	3500 K	80	MVOLT	NL-11
C	LED WALL PACK SINGLE-PIECE DIE-CAST ALUMINUM HOUSING 7000LM	WALL	LED	54 VA	4000 K	70	MVOLT	XL-17
D	LED FLOOD LIGHT DIE-CAST ALUMINUM HOUSING 12000LM	WALL	LED	102 VA	4000 K	70	MVOLT	XL-21

LUMINAIRE REQUIREMENTS:

1. HOUSING – FIBERGLASS OR FIBERGLASS-REINFORCED POLYESTER OUTER HOUSING, WITH ALUMINUM COMPONENT TRAY AND HEAT SINK. OPTIONAL LENGTHS OF 4FT OR 8FT.
2. LENS – IMPACT-RESISTANT ACRYLIC OR OPTIONAL POLYCARBONATE, WITH CONTINUOUS CLOSED-CELL POLYURETHANE GASKET, SECURED WITH STAINLESS STEEL OR POLYCARBONATE LATCHES.
3. LIGHT SOURCE – SOLID STATE LEDS WITH MINIMUM 50K HOURS RATED LIFE AT L70, 3500K CCT UON, MINIMUM 80 CRI, MAXIMUM 4-STEP MCADAM ELLIPSE BINNING TOLERANCE FOR COLOR CONSISTENCY, AND MINIMUM EFFICACY OF 100 LUMENS/WATT. INITIAL LUMEN OUTPUT AS INDICATED IN LUMINAIRE SCHEDULE.
4. DRIVER – REPLACEABLE, INTEGRAL, HIGH-EFFICIENCY DRIVER WITH MINIMUM 0.9 PF, OPERATING VOLTAGE OF 120-277V, THERMAL MANAGEMENT, < 20% TOTAL HARMONIC DISTORTION. ON-OFF CONTROL, STEP-DIMMABLE OR FULLY DIMMABLE AS INDICATED.
5. CERTIFICATION – UL 1598, WET LOCATION (IP65, IP66, IP67), DLC QUALIFIED, AND ROHS COMPLIANT. COMPLIES WITH LM79, LM80 AND TM21 TESTING STANDARDS. UL 924 WHEN EQUIPPED WITH EMERGENCY BATTERY BACK-UP.
6. MOUNTING – SURFACE-MOUNTED OR SUSPENDED FROM CEILING.
7. OPTIONS – EMERGENCY BACK-UP.
8. THIS SKETCH IS A NON-PROPRIETARY GRAPHIC REPRESENTATION OF A LUMINAIRE THAT MAY MEET THE SPECIFICATION REQUIREMENTS. IT IS NOT INTENDED TO INDICATE A CERTAIN MANUFACTURER OR PREFERENCE.

LED ENCLOSED AND GASKETED

REVISED: APRIL 2016 LIGHTING PLATE: NL-11

LUMINAIRE REQUIREMENTS:

1. HOUSING – DIE-CAST OR EXTRUDED ALUMINUM WITH INTEGRAL PASSIVE COOLING MECHANISM. HEAT SINK MUST BE INCORPORATED DIRECTLY INTO HOUSING OR DRIVER COMPARTMENT TO ENSURE MAXIMUM HEAT TRANSFER AND DISSIPATION.
2. FINISH – MULTI-STAGE PRE-TREATMENT, FINISHED WITH BAKED-ON POLYESTER POWDER COAT. FINISH MUST PASS 2500 HOUR SALT SPRAY TEST PER ASTM B117. STANDARD FINISH IS DARK BRONZE, WITH OTHER CUSTOM COLORS AVAILABLE.
3. POWER SUPPLY/LED DRIVER – CLASS 1 DRIVER MUST OPERATE AT 120/277 VOLTS, 50/60 HZ, WITH OTHER VOLTAGES OPTIONAL; POWER FACTOR GREATER THAN 0.9 AND THD LESS THAN 20% AT FULL LOAD. MINIMUM EFFICACY MUST BE 60 LM/W AT MAXIMUM 600mA OPERATING CURRENT.
4. LED OPTICAL ASSEMBLY – PRECISION MOLDED ACRYLIC LENS PROVIDED FOR MULTIPLE HIGH-POWERED LEDS PRODUCING NEMA TYPE III DISTRIBUTION OR AS OTHERWISE INDICATED. BUG UPLIGHT RATING OF U0, WITH GLARE RATING AS DETERMINED BY LIGHTING ZONE INSTALLED. MINIMUM COLOR RENDERING INDEX (CRI) MUST BE 70 FOR CORRELATED COLOR TEMPERATURE (CCT) OF 4000-4500 DEGREES K.
5. CERTIFICATION – UL AND/OR ETL LISTED FOR DAMP OR WET LOCATIONS AS INDICATED, AND RoHS COMPLIANT.
6. OPTIONS – VARIOUS LUMEN OUTPUT RATING AS INDICATED, AND 0-10 VOLT DIMMING DRIVER, MOUNTING BRACKET TYPE COMPATIBLE WITH BUILDING STRUCTURE.
7. OTHER – THE ABOVE SKETCH IS A NON-PROPRIETY GRAPHIC REPRESENTATION OF A LUMINAIRE THAT MAY MEET THE SPECIFICATION REQUIREMENTS AND IS NOT INTENDED TO INDICATE A CERTAIN MANUFACTURER'S PREFERENCE. ALL DIMENSIONS ARE NOMINAL AND VARY PER MANUFACTURER. MANUFACTURER'S PREFERENCE. ALL DIMENSIONS ARE NOMINAL AND VARY PER MANUFACTURER.

LED WALL PACK

REVISED: MARCH 2013 LUMINAIRE PLATE: XL-17

LUMINAIRE REQUIREMENTS:

1. HOUSING – DIE CAST ALUMINUM WITH INTEGRAL PASSIVE COOLING MECHANISM. HEAT SINK MUST BE INCORPORATED DIRECTLY INTO HOUSING TO ENSURE MAXIMUM HEAT TRANSFER AND DISSIPATION.
2. FINISH – MULTI-STAGE PRE-TREATMENT, FINISHED WITH BAKED-ON POLYESTER POWDER COAT. FINISH MUST PASS 2500 HOUR SALT SPRAY TEST PER ASTM B117. DARK BRONZE FINISH COLOR IS STANDARD.
3. POWER SUPPLY/LED DRIVER – CLASS 1 ELECTRONIC DRIVER MUST OPERATE AT 120/277 VOLTS, 50/60 HZ, WITH OTHER VOLTAGES OPTIONAL. POWER FACTOR MUST BE GREATER THAN 0.9 AND THD LESS THAN 20% AT FULL LOAD. MINIMUM EFFICACY MUST BE 60 LM/W AT MAXIMUM 600mA OPERATING CURRENT.
4. LED OPTICAL ASSEMBLY – MULTI-LED ARRAY OPTIMIZED FOR SPECIFIC DISTRIBUTION PATTERN AS INDICATED. MINIMUM COLOR RENDERING INDEX (CRI) OF 70 FOR CORRELEATED COLOR TEMPERATURE OF 4000-4500 DEGREES K.
5. LENS – TEMPERED GLASS IN DIE-CAST ALUMINUM FRAME WITH SILICONE GASKET.
6. SURGE PROTECTION – 6 KV MINIMUM, COMPLIANT WITH ANSI C62.41.2.
7. CERTIFICATION – UL AND/OR ETL LISTED FOR WET LOCATIONS AND 2G VIBRATION STANDARD PER ANSI C136.32. OPTICAL ASSEMBLY MUST BE MINIMUM IP65 PER ANSI/IEC 60529.
8. OPTIONS – FINISH COLOR, OUTPUT DISTRIBUTION TYPE AND TRUNNION OR SLIPFITTER TYPE MOUNTING. MOUNTING BRACKET TYPE COMPATIBLE WITH BUILDING STRUCTURE.
9. OTHER – THE ABOVE SKETCH IS A NON-PROPRIETARY GRAPHIC REPRESENTATION OF A LUMINAIRE THAT MAY MEET THE SPECIFICATION REQUIREMENTS AND IS NOT INTENDED TO INDICATE A CERTAIN MANUFACTURER'S PREFERENCE. ALL DIMENSIONS ARE NOMINAL AND VARY PER MANUFACTURER.

LED FLOOD LUMINAIRE

REVISED: MARCH 2013 LUMINAIRE PLATE: XL-21

SYM	DESCRIPTION	DATE	APPR.

NAVFAC

COMMONWEALTH OF VIRGINIA
KELLEY BOURASSA
LIC. NO. 040202617759
6/23/2025
PROFESSIONAL ENGINEER
SEAL

Jacobs
1100 NORTH GLEBE ROAD
SUITE 500
ARLINGTON, VIRGINIA 22201
571.218.1000
FAX: 571.218.1600
A/E INFO

APPROVED
FOR COMMANDER NAVFAC 8/14/2025
ACTIVITY APPROVED BY LCDR ELIZABETH OLOKODE NAVFAC NLON FEAD DIRECTOR NEW LONDON, GROTON, CT
SATISFACTORY TO DATE 05/27/2025

DES JP	DRW JP	CHK KB	
PM/DM	SMS/CWJ		
BRANCH MANAGER	WRB		
CHIEF ENG/ARCH	JWJ		
FIRE PROTECTION	HPN		

DEPARTMENT OF THE NAVY
NAVAL FACILITIES ENGINEERING SYSTEMS COMMAND
MID-ATLANTIC
NAVAL FACILITIES ENGINEERING SYSTEMS COMMAND - MID-ATLANTIC
NAVAL STATION - NORFOLK, VA
NAVAL SUBMARINE BASE NEW LONDON
GROTON, CONNECTICUT
P-1102 WEAPONS MAGAZINE & ORDNANCE OPERATIONS FACILITY
TYPE G MAGAZINE

ELECTRICAL SCHEDULES - SITE ADAPTED

SCALE: NONE
EPROJECT NO.: 1667770
CONSTR. CONTR. NO.
NAVFAC DRAWING NO. 12894233
SHEET 81 OF 91
E-603S

FILE NAME: C:\pw_workdir\dms0033\prj_philijh\d7113378\E-603S.dwg LAYOUT NAME: E-603 - ELECTRICAL SCHEDULES PLOTTED: Thursday, June 12, 2025 - 12:26pm USER: PHILLIJH
E-603S.dwg
FDZE1628

PANELBOARD "MDP" SCHEDULE

NAME: MDP | ACCESSORY LUGS: NONE | VOLTAGE: 480Y/277 3-PHASE, 4-WIRE + G. | BUS AMPS: 200
MOUNTING: Surface | NEUTRAL BUS: 100% RATED | MAIN AMPS: 125 MCB
LOCATION: Box G Interior | FED FROM: | GROUND BUS: EQUIPMENT ONLY | AIC: 14000

NOTE	LOAD		CIRCUIT BREAKER FRM.	TRIP	POLE	LOADS (VA) A	B	C	CKT NUMB.		LOADS (VA) A	B	C	CIRCUIT BREAKER FRM.	TRIP	POLE	NOTE	LOAD	
	EQN	CRANE #1	100	35	3	6000			1	2	260			100	20	1		EQN	DOOR #3 DRAIN PIPE HEAT TRACE
	EQN						6000		3	4		260		100	20	1		EQN	DOOR #3 DRAIN PIPE HEAT TRACE
	EQN							6000	5	6			260	100	20	1		EQN	DOOR #3 DRAIN PIPE HEAT TRACE
	EQN	CRANE #2	100	35	3	6000			7	8	260			100	20	1		EQN	DOOR #3 DRAIN PIPE HEAT TRACE
	EQN						6000		9	10		260		100	20	1		EQN	DOOR #3 DRAIN PIPE HEAT TRACE
	EQN							6000	11	12			260	100	20	1		EQN	DOOR #3 DRAIN PIPE HEAT TRACE
1	EQN	CRANE #3	100	35	3	0			13	14				100	20	1		SPARE	
1	EQN						0		15	16				100	20	1		SPARE	
1	EQN							0	17	18				100	20	1		SPARE	
	EQN	DOOR #3 TRENCH SNOW MELT	100	20	1	2990			19	20				100	20	1		SPARE	
	EQN	DOOR #3 DRAIN PIPE HEAT TRACE	100	20	1		260		21	22				100	20	1		SPARE	
	EQN	DOOR #3 DRAIN PIPE HEAT TRACE	100	20	1			260	23	24				100	20	1		SPARE	
	SUB	PANEL LP	100	50	3	3857			25	26	7020			100	60	3		SUB	PANEL HP
	SUB	THROUGH 30kVA XFMR					2987		27	28		1560						SUB	
	SUB							1639	29	30			1560					SUB	
						18847	15247	13899			7540	2080	2080						

SCHEDULE NOTES:
1 NOT ALL CRANES WILL OPERATE SIMULTANEOUSLY
2 UON, PROVIDE 2#12 + 1#12G IN 3/4"C FOR ALL 20A/1P BREAKERS.

*DEMAND LOAD = CONNECTED LOAD x DEMAND FACTOR
**DESIGN LOAD TOTAL = 1.25 x CONTINUOUS DEMAND LOAD + SUM OF NON-CONTINUOUS DEMAND LOADS

CONNECTED LOAD (kVA)							DEMAND LOAD* (kVA)					
PHASE A	26.4	L&A	0.0	LTG	3.0	EQC	0.5	L&A	0.0	LTG	3.0	EQC	0.5
PHASE B	17.3	DRY	0.0	REC	1.3	EQN	54.9	DRY	0.0	REC	1.3	EQN	54.9
PHASE C	16.0	RGE	0.0	KEQ	0.0	SPARE	14.9	RGE	0.0	KEQ	0.0	SPARE	14.9
CONNECTED LOAD TOTAL: 74.6 kVA							DESIGN LOAD TOTAL**: 75.5 kVA					

PANELBOARD "HP" SCHEDULE

NAME: HP | ACCESSORY LUGS: NONE | VOLTAGE: 480Y/277 3-PHASE, 4-WIRE + G. | BUS AMPS: 100
MOUNTING: Surface | NEUTRAL BUS: 100% RATED | MAIN AMPS: 60 MCB
LOCATION: Box G Interior | FED FROM: MDP | GROUND BUS: EQUIPMENT ONLY | AIC: 14000

NOTE	LOAD		CIRCUIT BREAKER FRM.	TRIP	POLE	LOADS (VA) A	B	C	CKT NUMB.		LOADS (VA) A	B	C	CIRCUIT BREAKER FRM.	TRIP	POLE	NOTE	LOAD	
	EQN	DOOR #1 TRENCH SNOW MELT	100	20	1	2990			1	2	2990			100	20	1		EQN	DOOR #2 TRENCH SNOW MELT
	EQN	DOOR #1 DRAIN PIPE HEAT TRACE	100	20	1		260		3	4		260		100	20	1		EQN	DOOR #2 DRAIN PIPE HEAT TRACE
	EQN	DOOR #1 DRAIN PIPE HEAT TRACE	100	20	1			260	5	6			260	100	20	1		EQN	DOOR #2 DRAIN PIPE HEAT TRACE
	EQN	DOOR #1 DRAIN PIPE HEAT TRACE	100	20	1	260			7	8	260			100	20	1		EQN	DOOR #2 DRAIN PIPE HEAT TRACE
	EQN	DOOR #1 DRAIN PIPE HEAT TRACE	100	20	1		260		9	10		260		100	20	1		EQN	DOOR #2 DRAIN PIPE HEAT TRACE
	EQN	DOOR #1 DRAIN PIPE HEAT TRACE	100	20	1			260	11	12			260	100	20	1		EQN	DOOR #2 DRAIN PIPE HEAT TRACE
	EQN	DOOR #1 DRAIN PIPE HEAT TRACE	100	20	1	260			13	14	260			100	20	1		EQN	DOOR #2 DRAIN PIPE HEAT TRACE
	EQN	DOOR #1 DRAIN PIPE HEAT TRACE	100	20	1		260		15	16		260		100	20	1		EQN	DOOR #2 DRAIN PIPE HEAT TRACE
	EQN	DOOR #1 DRAIN PIPE HEAT TRACE	100	20	1			260	17	18			260	100	20	1		EQN	DOOR #2 DRAIN PIPE HEAT TRACE
	SPARE	SPARE	100	20	1				19	20				-	-	1		SPACE	
	SPARE	SPARE	100	20	1				21	22				-	-	1		SPACE	
	SPARE	SPARE	100	20	1				23	24				-	-	1		SPACE	
	SPARE	SPARE	100	20	1				25	26				-	-	1		SPACE	
	SPARE	SPARE	100	20	1				27	28				-	-	1		SPACE	
	SPARE	SPARE	100	20	1				29	30				-	-	1		SPACE	
	SPARE	SPARE	100	20	1				31	32				-	-	1		SPACE	
	SPARE	SPARE	100	20	1				33	34				-	-	1		SPACE	
	SPARE	SPARE	100	20	1				35	36				-	-	1		SPACE	
						3510	780	780			3510	780	780						

SCHEDULE NOTES:
1 UON, PROVIDE 2#12 + 1#12G IN 3/4"C FOR ALL 20A/1P BREAKERS.

*DEMAND LOAD = CONNECTED LOAD x DEMAND FACTOR
**DESIGN LOAD TOTAL = 1.25 x CONTINUOUS DEMAND LOAD + SUM OF NON-CONTINUOUS DEMAND LOADS

CONNECTED LOAD (kVA)							DEMAND LOAD* (kVA)					
PHASE A	7.0	L&A	0.0	LTG	0.0	EQC	0.0	L&A	0.0	LTG	0.0	EQC	0.0
PHASE B	1.6	DRY	0.0	REC	0.0	EQN	10.1	DRY	0.0	REC	0.0	EQN	10.1
PHASE C	1.6	RGE	0.0	KEQ	0.0	SPARE	4.0	RGE	0.0	KEQ	0.0	SPARE	4.0
CONNECTED LOAD TOTAL: 14.1 kVA							DESIGN LOAD TOTAL**: 14.1 kVA					

PANELBOARD "LP" SCHEDULE

NAME: LP | ACCESSORY LUGS: NONE | VOLTAGE: 208Y/120 3-PHASE, 4-WIRE + G. | BUS AMPS: 100
MOUNTING: Surface | NEUTRAL BUS: 100% RATED | MAIN AMPS: 100 MCB
LOCATION: Box G Interior | FED FROM: MDP | GROUND BUS: EQUIPMENT ONLY | AIC: 10000

NOTE	LOAD		CIRCUIT BREAKER FRM.	TRIP	POLE	LOADS (VA) A	B	C	CKT NUMB.		LOADS (VA) A	B	C	CIRCUIT BREAKER FRM.	TRIP	POLE	NOTE	LOAD	
	LTG	LTG - MAIN MAGAZINE	100	20	1	1150			1	2	937			100	20	3		EQN	PWR - BLAST DOOR (2 HP)
	LTG	LTG - MAIN MAGAZINE	100	20	1		1150		3	4		937						EQN	
	LTG	LTG - EXTERIOR (TYPE C)	100	20	1			162	5	6			937					EQN	
	LTG	LTG - EXTERIOR (TYPE D)	100	20	1	510			7	8	0			100	20	3	1	EQN	PWR - BLAST DOOR (2 HP)
	SPARE	SPARE	100	20	1				9	10		0					1	EQN	
	EQN	LTG - LIGHTING CONTACTOR COIL	100	20	1			180	11	12			0				1	EQN	
	REC	RECEPT - BAY 1	100	20	1	540			13	14	0			100	20	3	1	EQN	PWR - BLAST DOOR (2 HP)
	REC	RECEPT - BAY 2	100	20	1		360		15	16		0					1	EQN	
	REC	RECEPT - BAY 3	100	20	1			360	17	18			0				1	EQN	
	EQN	TEMPERATURE CONTROL PANEL	100	20	1	360			19	20				100	20	1		SPARE	SPARE
	EQN	SNOW DETECTOR CONTROL PANEL	100	20	1		360		21	22				100	20	1		SPARE	SPARE
	SPARE	SPARE	100	20	1				23	24				100	20	1		SPARE	SPARE
	SPARE	SPARE	100	20	1				25	26				100	20	1		SPARE	SPARE
	SPARE	SPARE	100	20	1				27	28				100	20	1		SPARE	SPARE
	SPARE	SPARE	100	20	1				29	30				100	20	1		SPARE	SPARE
	SPARE	SPARE	100	20	1				31	32	360			100	20	1		EQC	EQPT - IT CABINET
	SPARE	SPARE	100	20	1				33	34		180		100	20	1		EQC	IDS SYSTEM PANEL
	SPARE	SPARE	100	20	1				35	36				100	20	1		SPARE	SPARE
	SPARE	SPARE	100	20	1				37	38	0			100	30	3		REC	SPD
	SPARE	SPARE	100	20	1				39	40		0						REC	
	SPARE	SPARE	100	20	1				41	42			0					REC	
						2560	1870	702			1297	1117	937						

SCHEDULE NOTES:
1 NOT ALL DOORS WILL OPERATE SIMULTANEOUSLY
2 UON, PROVIDE 2#12 + 1#12G IN 3/4"C FOR ALL 20A/1P BREAKERS.

*DEMAND LOAD = CONNECTED LOAD x DEMAND FACTOR
**DESIGN LOAD TOTAL = 1.25 x CONTINUOUS DEMAND LOAD + SUM OF NON-CONTINUOUS DEMAND LOADS

CONNECTED LOAD (kVA)							DEMAND LOAD* (kVA)					
PHASE A	3.9	L&A	0.0	LTG	3.0	EQC	0.5	L&A	0.0	LTG	3.0	EQC	0.5
PHASE B	3.0	DRY	0.0	REC	1.3	EQN	3.7	DRY	0.0	REC	1.3	EQN	3.7
PHASE C	1.6	RGE	0.0	KEQ	0.0	SPARE	2.9	RGE	0.0	KEQ	0.0	SPARE	2.9
CONNECTED LOAD TOTAL: 11.4 kVA							DESIGN LOAD TOTAL**: 12.2 kVA					

GENERAL NOTE:

1. CONTRACTOR MUST REARRANGE CIRCUITS AS REQUIRED TO IMPROVE LOAD BALANCE. TYPICAL FOR ALL PANELBOARDS.

THESE DRAWINGS HAVE BEEN ADAPTED FROM APPROVED NAVFAC MUNITIONS STORAGE CONSTRUCTION DOCUMENTS, NAVFAC DRAWING NUMBERS 14145654 TO 14145739, APPROVED BY DDESB ON 24 SEPT 2024. JACOBS DOR RESPONSIBILITY AND SEAL APPLICABILITY IS LIMITED TO THE SITE ADAPTATIONS AND MODIFICATIONS MADE TO THIS DRAWING.

ORIGINAL STANDARD DRAWING IS NAVFAC DRAWING NUMBER 14145733 SHT 80 OF 86

SYM	DESCRIPTION	DATE	APPR.

NAVFAC

COMMONWEALTH OF VIRGINIA
KELLEY BOURASSA
Lic. No. 0402061759
6/23/2025
PROFESSIONAL ENGINEER
SEAL

Jacobs
1100 NORTH GLEBE ROAD
SUITE 500
ARLINGTON, VIRGINIA 22201
571.218.1000
FAX: 571.218.1600
A/E INFO

APPROVED
FOR COMMANDER NAVFAC 8/14/2025

ACTIVITY
APPROVED BY LCDR ELIZABETH OLOKODE NAVFAC NLON FEAD DIRECTOR NEW LONDON, GROTON, CT
SATISFACTORY TO DATE 05/27/2025

DES	JP	DRW JP	CHK KB
PM/DM	SMS/CWJ		
BRANCH MANAGER	WRB		
CHIEF ENG/ARCH	JWJ		
FIRE PROTECTION	HPN		

DEPARTMENT OF THE NAVY
NAVAL FACILITIES ENGINEERING SYSTEMS COMMAND
MID-ATLANTIC
NAVAL FACILITIES ENGINEERING SYSTEMS COMMAND - MID-ATLANTIC
NAVAL STATION - NORFOLK, VA
NAVAL SUBMARINE BASE NEW LONDON
GROTON, CONNECTICUT
P-1102 WEAPONS MAGAZINE & ORDNANCE OPERATIONS FACILITY
TYPE G MAGAZINE
ELECTRICAL SCHEDULES - SITE ADAPTED

SCALE:	NONE
EPROJECT NO.:	1667770
CONSTR. CONTR. NO.	
NAVFAC DRAWING NO.	12894234
SHEET	82 OF 91
	E-604S

FILE NAME: C:\pw_work\dir\jdenl033\prj_phillijh\d1711378\E-604S.dwg LAYOUT NAME: E-604 - ELECTRICAL SCHEDULES PLOTTED: Thursday, June 12, 2025 - 12:51pm USER: PHILLIJH

E-604S.dwg

FDZE1628

SHEET NOTES

1. COORDINATE WITH HEAT TRACE/SNOW MELT MANUFACTURER TO PROVIDE ALL MATERIALS, EQUIPMENT, POWER, AND CONTROLS WIRING FOR A FULLY FUNCTIONAL SYSTEM. SNOW MELT SYSTEM MUST BE CAPABLE OF SENSING TEMPERATURE AND DETECTING MOISTURE ON THE PAVEMENT.
2. HEAT TRACE LOADS FOR DRAIN PIPES ARE BASED ON 8W/LF. SNOWMELT LOAD FOR DOOR TRENCH IS BASED ON 50W/SF. REFER TO PANEL SCHEDULES FOR ADDITIONAL INFORMATION.
3. SNOW MELT AND HEAT TRACE SYSTEMS MUST HAVE 25 YEAR WARRANTY.
4. COORDINATE FINAL LOCATION OF ALL HEAT TRACE DEVICES WITH GOVERNMENT PRIOR TO INSTALLATION. LOCATIONS SHOWN ARE DIAGRAMMATIC FOR CIRCUITING PURPOSES ONLY. COORDINATE FINAL ROUTING OF HEAT TRACE CABLES FROM HEAT TRACE POWER BOX TO EACH DOOR TRENCH AND DRAIN PIPES.

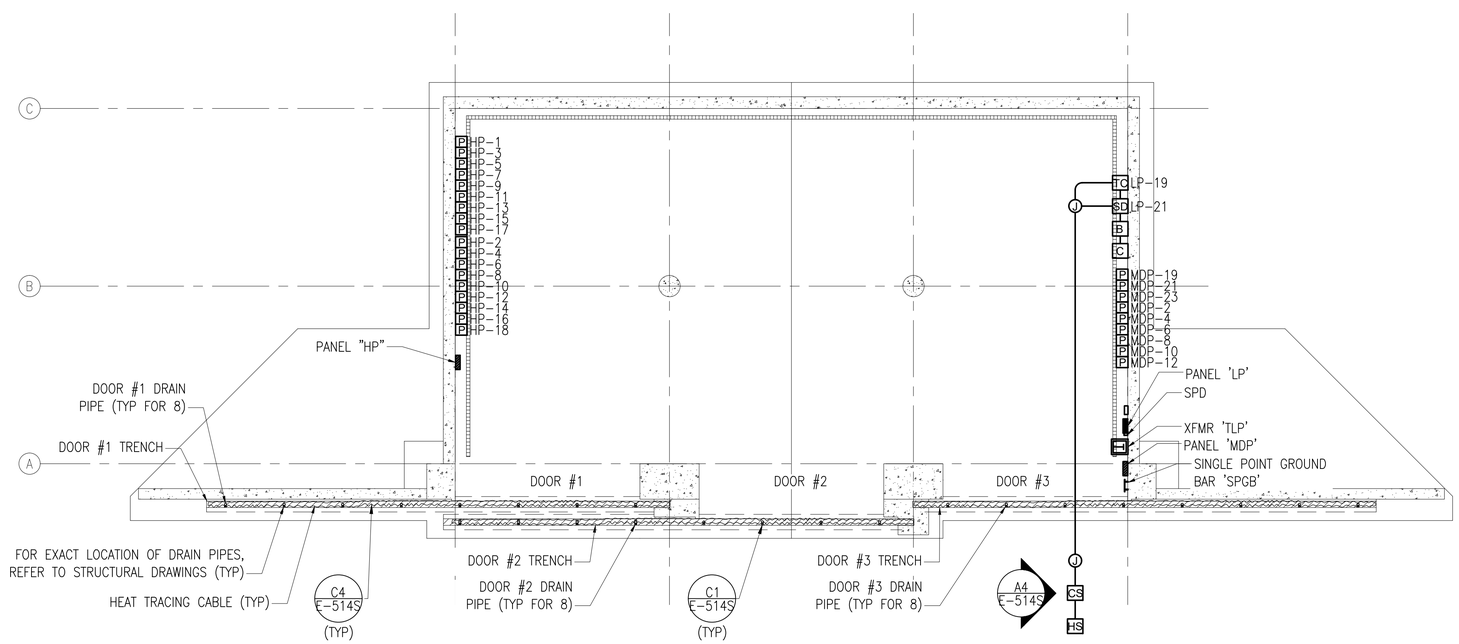

A1 ELECTRICAL HEAT TRACE PLAN

SCALE: 3/32" = 1'-0"

0 8' 16' 32'

PLAN NORTH

SYM	DESCRIPTION	DATE	APPR

NAVFAC

COMMONWEALTH OF VIRGINIA
KELLEY BOURASSA
LIC. NO. 0401206175 9
6/23/2025
PROFESSIONAL ENGINEER
SEAL

Jacobs
1100 NORTH GLEBE ROAD
SUITE 500
ARLINGTON, VIRGINIA 22201
571.218.1000
FAX: 571.218.1600
A/E INFO

APPROVED
FOR COMMANDER NAVFAC 8/14/2025

ACTIVITY
APPROVED BY LCDR ELIZABETH
CLOKODE NAVFAC NLON FEAD
DIRECTOR NEW LONDON, GROTON, CT
SATISFACTORY TO DATE 05/27/2025

DES	JP	DRW	JP
CHK	KB		
PM/DM	SMS/CWJ		
BRANCH MANAGER	WRB		
CHIEF ENG/ARCH	JWJ		
FIRE PROTECTION	HPN		

DEPARTMENT OF THE NAVY
NAVAL FACILITIES ENGINEERING SYSTEMS COMMAND
MID-ATLANTIC
NAVAL FACILITIES ENGINEERING SYSTEMS COMMAND - MID-ATLANTIC
NAVAL STATION - NORFOLK, VA
NAVAL SUBMARINE BASE NEW LONDON
GROTON, CONNECTICUT
P-1102 WEAPONS MAGAZINE & ORDNANCE OPERATIONS FACILITY
TYPE G MAGAZINE
ELECTRICAL HEAT TRACE PLAN

SCALE: AS SHOWN
EPROJECT NO.: 1667770
CONSTR. CONTR. NO.
NAVFAC DRAWING NO.
12894235
SHEET 83 OF 91
E-801S

FDZE1628 E-801S.dwg

FILE NAME: C:\pw_workdir\dms0033\jacg_philijh\d1711378\E-801S.dwg LAYOUT NAME: E-801S - ELECTRICAL FLOOR PLAN PLOTTED: Thursday, June 12, 2025 - 12:50pm USER: PHILLIJH

SYMBOL	DESCRIPTION
DC	HIGH SECURITY BMS DOOR CONTACT
K	KEYPAD
M	MOTION DETECTOR, CEILING MOUNTED
M	MOTION DETECTOR, WALL MOUNTED
J	RECESSED JUNCTION BOX
J	SURFACE JUNCTION BOX
IDS	IDS CONTROLLER
IT	IT CABINET
ILD	INTERNAL LOCKING DEVICE

AFF	ABOVE FINISHED FLOOR
BCO	BASE COMMUNICATIONS OFFICE
BFC	BELOW FINISHED GRADE
CR	CARD READER
C	CONDUIT
EA	EACH
ER	EQUIPMENT ROOM
EX	EXISTING
GFCI	GOVERNMENT FURNISHED, CONTRACTOR INSTALLED
GFGI	GOVERNMENT FURNISHED, GOVERNMENT INSTALLED
IDS	INTRUSION DETECTION SYSTEM
IT	INFORMATION TECHNOLOGY
MS	MOTION SENSOR
NMCI	NAVY MARINE CORPS INTRANET
PBB	PRIMARY BUS BAR
POC	POINT OF CONTACT
QU	QUANTITY
REQ'D	REQUIRED
RM	ROOM
SBB	SECONDARY BUS BAR
SHT	SHEET
TR	TELECOMMUNICATION ROOM
TBB	TELECOMMUNICATION BONDING BACKBONE
UNO	UNLESS NOTED OTHERWISE

GENERAL PROJECT NOTES

A. ALL MOUNTING HEIGHTS ARE TO THE CENTER LINE OF THE DEVICE BACKBOX UNLESS NOTED OTHERWISE.
B. ALL BOXES AND CONDUITS IN WALLS AND CEILINGS SHALL BE FLUSH MOUNTED OR CONCEALED UNLESS NOTED OTHERWISE.
C. ALL EXTERIOR OUTLETS SHALL BE WEATHERPROOF.
D. EXACT LOCATION OF ALL TELECOM OUTLETS LOCATED IN FURNITURE AND MILLWORK TO BE VERIFIED WITH ARCHITECT PRIOR TO INSTALLATION.
E. ELECTRICAL OUTLETS SHALL BE PROVIDED WITHIN THREE FEET OF COMMUNICATION OUTLETS AT EQUAL HEIGHT.

SEPARATION DISTANCES BETWEEN POWER AND DATA CABLES

CONDITION	MINIMUM SEPARATION DISTANCE		
	< 2kVA	2-5 kVA	> 5kVA
UNSHIELDED POWER LINES OR ELECTRICAL EQUIPMENT IN PROXIMITY TO OPEN OR NONMETAL PATHWAYS.	5"	12"	24"
UNSHIELDED POWER LINES OR ELECTRICAL EQUIPMENT IN PROXIMITY TO A GROUNDED METAL CONDUIT PATHWAY.	2.5"	6"	12"
POWER LINES ENCLOSED IN A GROUNDED METAL CONDUIT (OR EQUIVALENT SHIELDING) IN PROXIMITY TO A GROUNDED METAL CONDUIT PATHWAY.		3"	6"
ELECTRICAL MOTORS AND TRANSFORMERS.			48"

50' DISTANCE LIMIT RULE

A. IN NO CASE MUST A NON-LISTED OUTSIDE PLANT OR INCOMING SERVICE OUTDOOR RATED CABLE EXCEED 50 FEET FROM THE POINT OF ENTRANCE INTO ANY BUILDING. IF ON-SITE CONDITIONS RESULT IN A CASE WHERE THE CABLE EXCEEDS THE DISTANCE LIMIT THE CONTRACTOR MUST ADVISE A SOLUTION WITH THE PROJECT CONSULTANT. IN ALL CASES THE SOLUTION WOULD NEED TO INVOLVE EITHER TRANSITIONING FROM OUTDOOR NON-LISTED TO INDOOR LISTED CABLE VIA A SPLICE POINT (E.G. SPLICE CASE OR SPLICE ENCLOSURE FOR FIBIER, PROTECTOR BLOCK FOR COPPER ETC.) OR THE ALTERNATIVE SHOULD BE TO ENCLOSE THE OUTDOOR RATED CABLE WITHIN INTERMEDIATE METAL CONDUIT (IMC) OR RIGID METAL CONDUIT (RMC) THAT IS PROPERLY SEALED AND BONDED TO A GROUNDING ELECTRODE. RETAINING THE OUTDOOR CABLE WITHIN CONDUIT SHOULD EFFECTIVELY EXTEND THE POINT OF ENTRANCE INTO THE BUILDING.

OSP DETECTION TAPE INCLUSION

A. IN ORDER TO REDUCE THE CHANCE OF ACCIDENTAL DIG-UP OF OUTSIDE PLANT DUCTBANK ELEMENTS IN THE FUTURE, PROVIDE A DETECTABLE WARNING TAPE CONTAINING METALLIC TRACINGS ALONG THE DUCTBANK PATH AT 12" BELOW GRADE MINIMUM. COLOR OF THE DETECTABLE TAPE SHALL BE ORANGE OR WHICHEVER COLOR THE COMMON GROUND ALLIANCE (CGA) HAS CURRENTLY DETERMINED FOR TELEVISION AND COMMUNITY ANTENNA TELEVISION (CATV) CABLES.

CONDUIT INSTALLATION NOTES

ASSOCIATED WITH DIVISION 26

THE RACEWAY SYSTEM FOR TELECOM CABLE SHALL FOLLOW THE NEC AND ALL LOCAL CODES GOVERNING THIS PROJECT. ADDITIONAL REQUIREMENTS ARE AS FOLLOWS:

1. A PULL CORD (NYLON, 1/8" MINIMUM) MUST BE INSTALLED WITHIN ALL CONDUITS.

2. CONDUIT MUST RUN IN MOST DIRECT ROUTE POSSIBLE, USUALLY PARALLEL WITH BUILDING LINES.

3. CONDUIT SLEEVES MUST BE RIGID GALVANIZED STEEL FOR PENETRATIONS OF CONCRETE SLABS, CONCRETE WALLS. ALL SLEEVES MUST BE RIGIDLY INSTALLED USING APPROPRIATE FITTINGS AND ALL PENETRATIONS MUST BE GROUTED AROUND THE SLEEVE. SLEEVES MUST PROJECT A MINIMUM OF 4" BEYOND WALL OR FLOOR SURFACE. ALL PENETRATIONS MUST BE FIRESTOPPED.

4. CONDUIT RUN MUST CONTAIN NO CONTINUOUS SECTIONS LONGER THAN 600 FEET. IF RUNS TOTAL MORE THAN 600 FEET, PULL BOX OR MAINTENANCE HOLE MUST BE INSERTED.

5. OUTSIDE PLANT LOCATIONS, ROUTES, AND PULL POINTS ARE INDICATIVE ONLY. CONTRACTOR TO REVIEW THE PROJECT SITE AND SUBMIT SHOP DRAWING FOR REVIEW BEFORE COMMENCING WORK.

6. CONDUIT MUST HAVE NO MORE THAN TWO 90 DEGREES OF BENDS AT ANY POINT OR MORE THAN 180 DEGREES OF CUMULATIVE BENDS BETWEEN PULL POINTS.

7. INSTALL CONDUITS WITH A MINIMUM OF BENDS AND OFFSETS. BENDS MUST NOT KINK OR DESTROY INTERIOR CROSS SECTION OF RACEWAY. FACTORY MADE BENDS MUST BE USED FOR RACEWAY'S 1" TRADE SIZE AND LARGER. BENDS RADIUS MUST BE 6 TIMES INTERNAL DIAMETER FOR CONDUIT SIZES UP TO 2". A CONDUIT GREATER THAN 2" MUST HAVE BEND RADIUS AT LEAST 10 TIMES DIAMETER OF CONDUIT. DO NOT USE PULL BOX IN LIEU OF A BEND RADIUS. BEND RADIUS ON CABLING MUST ALWAYS BE MADE WITHIN THE CONDUIT.

8. CONDUITS MUST MAINTAIN A MINIMUM 24 INCH CLEARANCE BETWEEN UTILITIES.

9. REAM ALL CONDUIT ENDS AND FIT THEM WITH AN INSULATED BUSHING TO ELIMINATE SHARP EDGES THAT MAY DAMAGE CABLES.

10. AFTER INSTALLATION, LEAVE CONDUITS CLEAN, DRY AND UNOBSTRUCTED, REAMED AND FITTED WITH BUSHINGS.

11. ELECTRICAL METALLIC TUBING AND RIGID METAL CONDUIT ARE THE ONLY ALLOWED TYPES FOR INTERIOR BUILDING. FLEXIBLE METAL CONDUIT IS NEVER ALLOWED.

12. CONDUIT SYSTEM INSTALLATION:
 12.1. CABLE IN EXTERIOR, ABOVE GRADE LOCATIONS: RIGID GALVANIZED STEEL.
 12.2. INTERIOR LOCATIONS: EMT.
 12.3. CABLE BELOW GRADE: SCHEDULE 40 PVC. PROVIDE RGS A MIN OF 50FT BEFORE ENTERING A MAGAZINE.

13. TELECOMMUNICATIONS PULL BOX MUST BE RATED FOR THE TERRAIN IT WILL BE INSTALLED IN.

14. DO NOT INSTALL PULL BOXES IN SIDEWALKS. PULL BOXES INSTALLED IN PARKING LOTS OR DRIVEWAYS MUST BE RATED FOR SUCH AN ENVIRONMENT.

15. CABLE PULLING TENSION MUST NOT EXCEED THE MANUFACTURERS RECOMMENDATIONS - PULL METER MUST BE USED TO MEASURE TENSION.

16. FOR OUTSIDE PLANT CONDUITS ROUTES PROVIDE A SITE LEVEL ACCESSIBLE HANDHOLE EVERY (2) 90 DEGREE BENDS OR 180 DEGREES IN BENDS TOTAL. DISTANCE BETWEEN EACH HANDHOLE MUST NOT EXCEED 600 FEET DISTANCE. DO NOT USE HANDHOLE IN LIEU OF A BEND RADIUS. BEND RADIUS ON CABLING MUST ALWAYS BE MADE WITHIN THE CONDUIT.

17. DEPTH OF COVER: AT LEAST 24 INCHES OF COVER ARE REQUIRED ABOVE THE TOP OF THE DUCT BANK. AT LEAST 18 INCHES OF COVER ARE REQUIRED UNDER ROADS OR SIDEWALKS (IF DUCT IS CONCRETE -ENCASED). FOR DUCTS INSTALLED IN SOLID ROCK, THE COVER MUST CONSIST OF AT LEAST 6 INCHES OF CONCRETE. IF ROCK IS ENCOUNTERED BELOW GRADE, THE MINIMUM COVER ABOVE THE CONCRETE-ENCASED DUCT MUST BE 12 INCHES. THE COVER OR FILL MUST BE COMPACTED IAW UFGS-02300

SYM	DESCRIPTION	DATE	APPR

NAVFAC

REGISTERED COMMUNICATIONS DISTRIBUTION DESIGNER
6123180085
Bicsi
Rene Rubio
BICSI ID #112613
EXPIRES 12-31-26
RCDD
SEAL

Jacobs
1100 NORTH GLEBE ROAD
SUITE 500
ARLINGTON, VIRGINIA 22201
571.218.1000
FAX: 571.218.1600
A/E INFO

APPROVED
FOR COMMANDER NAVFAC 8/14/2025
ACTIVITY
APPROVED BY LCDR ELIZABETH OLOKODE NAVFAC NLON FEAD DIRECTOR NEW LONDON, GROTON, CT
SATISFACTORY TO DATE 05/27/2025

DES	RR	DRW TO	CHK HF
PM/DM	SDS/RSF		
BRANCH MANAGER	WRB		
CHIEF ENG/ARCH	JWJ		
FIRE PROTECTION	HPN		

DEPARTMENT OF THE NAVY
NAVAL FACILITIES ENGINEERING SYSTEMS COMMAND
MID-ATLANTIC
NAVAL FACILITIES ENGINEERING SYSTEMS COMMAND - MID-ATLANTIC
NAVAL STATION - NORFOLK, VA
NAVAL SUBMARINE BASE NEW LONDON
GROTON, CONNECTICUT
P-1102 WEAPONS MAGAZINE & ORDINANCE OPERATIONS FACILITY
TYPE G BOX MAGAZINE
TELECOMMUNICATIONS SYMBOLS AND NOTES

SCALE:
EPROJECT NO.: 1667770
CONSTR. CONTR. NO.
NAVFAC DRAWING NO.
12894236
SHEET 84 OF 91
T-001S

THESE DRAWINGS HAVE BEEN ADAPTED FROM APPROVED NAVFAC MUNITIONS STORAGE CONSTRUCTION DOCUMENTS, NAVFAC DRAWING NUMBERS 14145735 TO 14145739, APPROVED BY DDESB ON 24 SEPTEMBER 2024. JACOBS DOR RESPONSIBILITY AND SEAL APPLICABILITY IS LIMITED TO THE SITE ADAPTATIONS AND MODIFICATIONS MADE TO THIS DRAWING.

ORIGINAL STANDARD DRAWING IS NAVFAC DRAWING NUMBER 14145735 SHT 82 OF 86

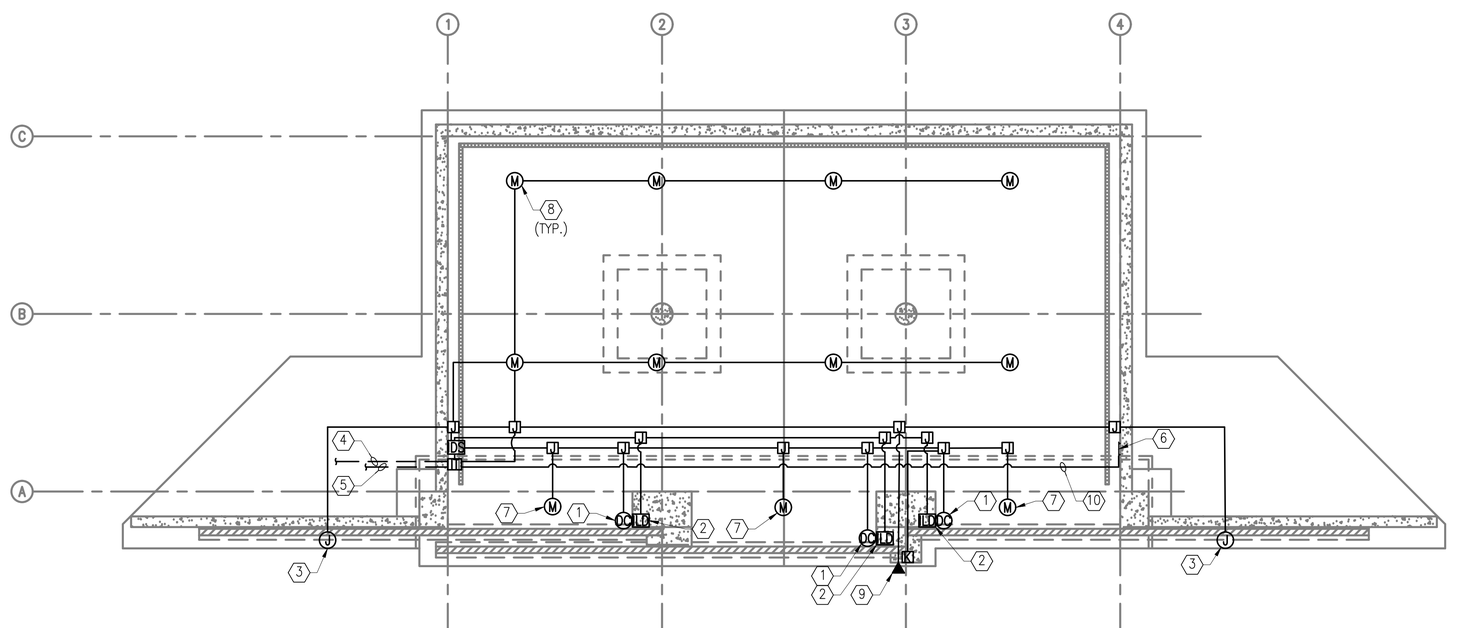

A1 TELECOMMUNICATION FLOOR PLAN
SCALE: 3/32" = 1'-0"

LEGEND

DC	HIGH SECURITY BMS DOOR CONTACT
K1	KEYPAD
M	MOTION DETECTOR, CEILING MOUNTED
M	MOTION DETECTOR, WALL MOUNTED
J	RECESSED JUNCTION BOX
J	SURFACE JUNCTION BOX
IDS	IDS CONTROLLER
IT	IT CABINET
ILD	INTERNAL LOCKING DEVICE

SHEET NOTES

1. ALL CONDUIT MUST BE RIGID GALVANIZED STEEL CONDUIT UNLESS INDICATED OTHERWISE.
2. EXPOSED CONDUITS ON EXTERIOR WALLS MUST BE PROHIBITED.
3. PROPOSED IDS VENDOR TO PERFORM COVERAGE CALCULATIONS, INCLUDING OBSTRUCTIONS, TO VERIFY QUANTITY AND LOCATION OF MOTION DETECTORS. FINAL LOCATIONS AND QUANTITIES OF MOTION DETECTORS TO BE INSTALLED PER IDS VENDOR SHOP DRAWINGS.
4. ALL CONDUITS WILL BE MINIMUM 1"C UNLESS NOTED OTHERWISE. REFER TO T-601S FOR CONDUIT SIZES.
5. CONDUITS WILL BE EXPOSED INSIDE THE MAGAZINE UNLESS INDICATED OTHERWISE. LOCATE CONDUITS AS HIGH AS POSSIBLE AND COORDINATE ROUTING WITH OTHER TRADES. JUNCTION BOXES WILL BE SURFACE MOUNTED.

KEYED NOTES

1. DOOR CONTACT FOR ECM DOOR. COORDINATE WITH DOOR MANUFACTURER FOR EXACT LOCATION AND ROUGH-IN REQUIREMENTS. COORDINATE WITH THE CONTRACTING OFFICER FOR THE CONNECTION OF THE BMS ON THE DOOR.
2. IDS BOLTWORKS SLEEVE IN PILASTER. PROVIDE EMPTY 1" CONDUIT TO IDS PULLBOX FOR WIRING BY GOVERNMENT.
3. RECESSED ROUGH-IN FOR FUTURE CCTV CAMERA. HOMERUN TO IT CABINET. MOUNT 12" ABOVE TOP OF SLIDING MAGAZINE DOOR.
4. EXTEND TWO 1-1/2" CONDUITS TO SITE POLE, LOCATION TO BE DETERMINED THROUGH COORDINATION WITH BASE SSO AND COMM SQUADRON, FOR PoE IP CAMERA AND PoE WIRELESS ACCESS POINT. POLE LOCATION AND CONDUIT ROUTE WILL BE LIMITED BY MAXIMUM CABLE LENGTH OF 295' FROM PATCH PANEL TO DEVICE. REFER TO DETAIL B1/T-501S AND A1/T-601S. TO BE PROVIDED WHEN REQUIRED BASED ON CLASSIFICATION OF STORED MATERIALS. COORDINATE WITH CONTRACTING OFFICER. CONDUITS WILL EXIT THE MAGAZINE THROUGH THE SIDE WALL, PENETRATION OF THE FOUNDATION IS NOT PERMITTED.
5. EXTEND TWO 4" CONDUITS TO NEAREST TELECOMM MANHOLE. CONDUITS WILL EXIT THE MAGAZINE THROUGH THE SIDE WALL, PENETRATION OF THE FOUNDATION IS NOT PERMITTED.
6. SINGLE POINT GROUND BAR. REFER TO E-101S.
7. MOTION DETECTOR WILL BE INSTALLED 3' FROM THE INSIDE FACE OF THE MAGAZINE DOOR.
8. MOTION DETECTORS WILL BE EVENLY SPACED FOR COVERAGE OF THE ENTIRE INTERIOR SPACE.
9. EXTERIOR EMERGENCY PHONE. REFER TO B3/T-501S.
10. TELECOMMUNICATIONS GROUNDING CONDUCTOR IN CONDUIT.

ABBREVIATIONS

BMS	BALANCED MAGNETIC SWITCH
CCTV	CLOSED-CIRCUIT TELEVISION
IDS	INTRUSION DETECTION SYSTEM
ILD	INTERNAL LOCKING DEVICE
IT	INFORMATION TECHNOLOGY
PIR	PASSIVE INFRARED SENSOR
POE	POWER OVER ETHERNET
RGC	RIGID GALVANIZED STEEL CONDUIT
WAP	WIRELESS ACCESS POINT

SYM	DESCRIPTION	DATE	APPR.

NAVFAC

REGISTERED COMMUNICATIONS DISTRIBUTION DESIGNER
6/23/2025
Bicsi
Rene Rubio
BICSI ID #112613
EXPIRES 12-31-26
RCDD
SEAL

Jacobs
1100 NORTH GLEBE ROAD
SUITE 500
ARLINGTON, VIRGINIA 22201
571.218.1000
FAX: 571.218.1600

A/E INFO

APPROVED
FOR COMMANDER NAVFAC 8/14/2025
ACTIVITY
APPROVED BY LCDR ELIZABETH OLOKODE NAVFAC NLON FEAD DIRECTOR NEW LONDON, GROTON, CT
SATISFACTORY TO DATE 05/27/2025

DES	DS	DRW GC	CHK KD
PM/DM	SMS/CWJ		
BRANCH MANAGER	WRB		
CHIEF ENG/ARCH	JWJ		
FIRE PROTECTION	HPN		

DEPARTMENT OF THE NAVY
NAVAL FACILITIES ENGINEERING SYSTEMS COMMAND
MID-ATLANTIC
NAVAL FACILITIES ENGINEERING SYSTEMS COMMAND - MID-ATLANTIC
NAVAL STATION - NORFOLK, VA
NAVAL SUBMARINE BASE NEW LONDON
GROTON, CONNECTICUT
P-1102 WEAPONS MAGAZINE & ORDNANCE OPERATIONS FACILITY
TYPE G MAGAZINE
TELECOMMUNICATION FLOOR PLAN – SITE ADAPTED

SCALE: AS NOTED
EPROJECT NO.: 1667770
CONSTR. CONTR. NO.
NAVFAC DRAWING NO.
12894237
SHEET 85 OF 91
T-101S

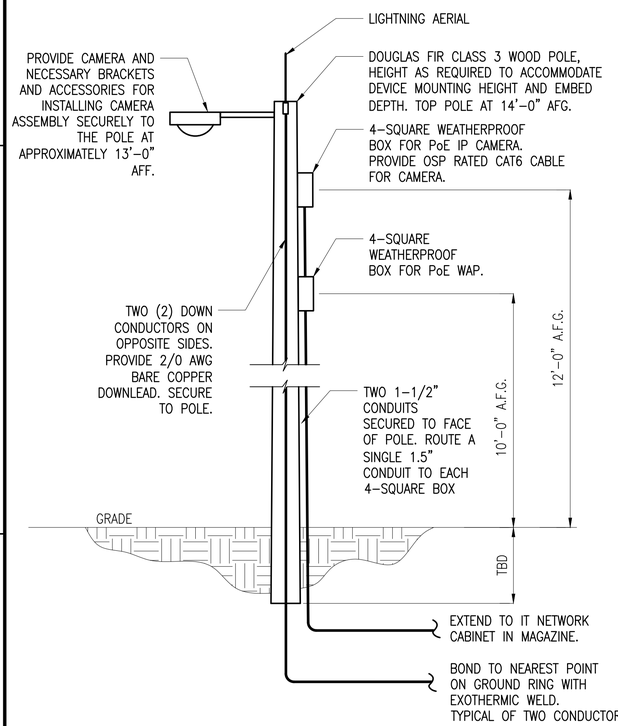

NOTE: CABLES INSTALLED IN UNDERGROUND CONDUITS MUST BE CONSTRUCTED FOR USE IN FLOODED ENVIRONMENTS. COPPER CABLES MUST INCLUDE PRIMARY ENTRANCE PROTECTORS AT BOTH ENDS AND RATED TO MATCH THE CATEGORY OF CABLE.

B1 POLE FOR SITE CAMERA AND WAP

SCALE: NO SCALE

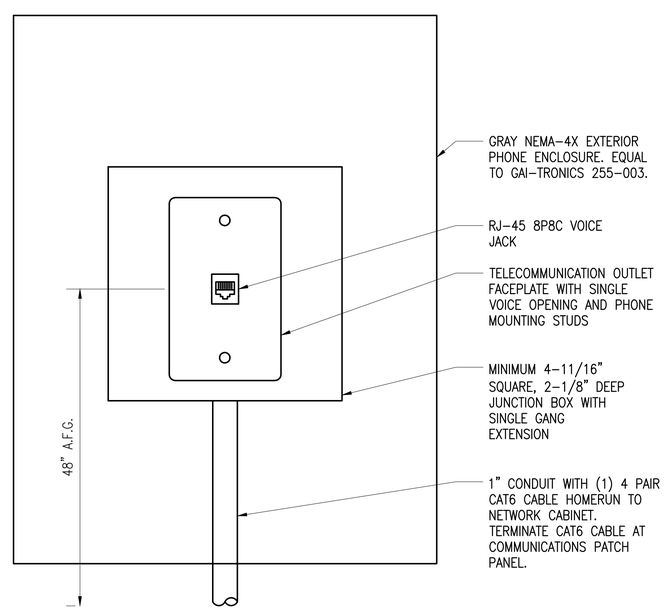

B3 VOICE WALL OUTLET

SCALE: NO SCALE

SYMBOL: ▼

THESE DRAWINGS HAVE BEEN ADAPTED FROM APPROVED NAVFAC MUNITIONS STORAGE CONSTRUCTION DOCUMENTS, NAVFAC DRAWING NUMBERS 14145735 TO 14145739, APPROVED BY DDESB ON 24 SEPTEMBER 2024. JACOBS DOR RESPONSIBILITY AND SEAL APPLICABILITY IS LIMITED TO THE SITE ADAPTATIONS AND MODIFICATIONS MADE TO THIS DRAWING.

ORIGINAL STANDARD DRAWING IS NAVFAC DRAWING NUMBER 14145736 SHT 83 OF 86

SYM	DESCRIPTION	DATE	APPR

NAVFAC

REGISTERED COMMUNICATIONS DISTRIBUTION DESIGNER RCDD
6/23/2025
Bicsi
Rene Rubio
BICSI ID #112613
EXPIRES 12-31-26
SEAL

Jacobs
1100 NORTH GLEBE ROAD
SUITE 500
ARLINGTON, VIRGINIA 22201
571.218.1000
FAX: 571.218.1600
A/E INFO

APPROVED
FOR COMMANDER NAVFAC 8/14/2025
ACTIVITY
APPROVED BY LCDR ELIZABETH OLOKODE NAVFAC NLON FEAD DIRECTOR NEW LONDON, GROTON, CT
SATISFACTORY TO DATE 05/27/2025

DES DS	DRW GC	CHK KD	
PM/DM	SMS/CWJ		
BRANCH MANAGER	WRB		
CHIEF ENG/ARCH	JWJ		
FIRE PROTECTION	HPN		

DEPARTMENT OF THE NAVY
NAVAL FACILITIES ENGINEERING SYSTEMS COMMAND
MID-ATLANTIC
NAVAL FACILITIES ENGINEERING SYSTEMS COMMAND - MID-ATLANTIC
NAVAL STATION - NORFOLK, VA
NAVAL SUBMARINE BASE NEW LONDON
GROTON, CONNECTICUT
P-1102 WEAPONS MAGAZINE & ORDNANCE OPERATIONS FACILITY
TYPE G MAGAZINE
TELECOMMUNICATION DETAILS – SITE ADAPTED

SCALE: AS NOTED
EPROJECT NO.: 1667770
CONSTR. CONTR. NO.
NAVFAC DRAWING NO.
12894238
SHEET 86 OF 91

T-501S

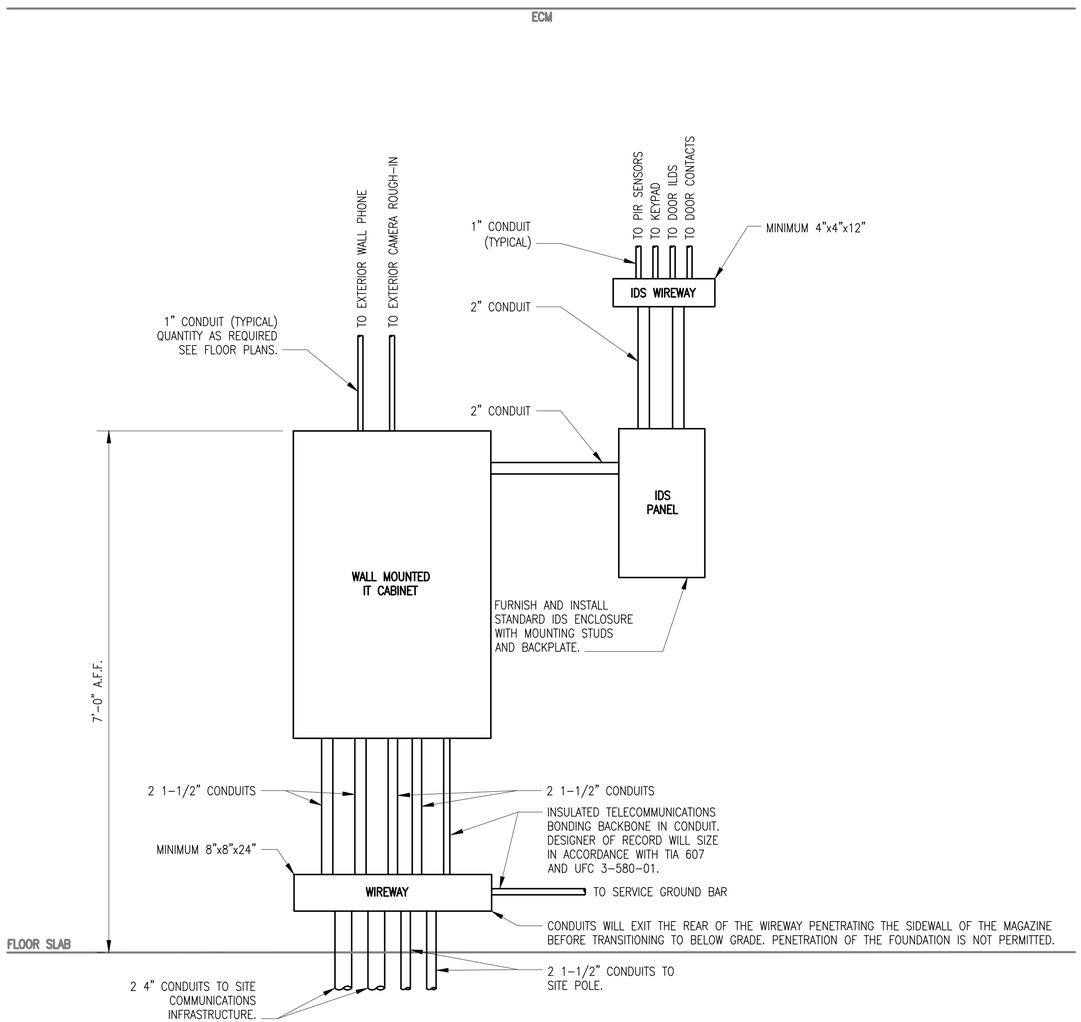

A1 TELECOMMUNICATION AND SECURITY RISER

SCALE: NO SCALE

THESE DRAWINGS HAVE BEEN ADAPTED FROM APPROVED NAVFAC MUNITIONS STORAGE CONSTRUCTION DOCUMENTS, NAVFAC DRAWING NUMBERS 14145735 TO 14145739, APPROVED BY DDESB ON 24 SEPTEMBER 2024. JACOBS DOR RESPONSIBILITY AND SEAL APPLICABILITY IS LIMITED TO THE SITE ADAPTATIONS AND MODIFICATIONS MADE TO THIS DRAWING.

ORIGINAL STANDARD DRAWING IS NAVFAC DRAWING NUMBER 14145738 SHT 85 OF 86

SYM	DESCRIPTION	DATE	APPR

NAVFAC

REGISTERED COMMUNICATIONS DISTRIBUTION DESIGNER
6123120025
Bicsi
Rene Rubio
BICSI ID #112613
EXPIRES 12-31-26
RCDD
SEAL

Jacobs
1100 NORTH GLEBE ROAD
SUITE 500
ARLINGTON, VIRGINIA 22201
571.218.1000
FAX: 571.218.1600
A/E INFO

APPROVED
FOR COMMANDER NAVFAC 8/14/2025
ACTIVITY
APPROVED BY LCDR ELIZABETH OLOKODE NAVFAC NLON FEAD DIRECTOR NEW LONDON, GROTON, CT
SATISFACTORY TO DATE 05/27/2025

DES	DS	DRW	GC	CHK	KD
PM/DM	SMS/CWJ				
BRANCH MANAGER	WRB				
CHIEF ENG/ARCH	JWJ				
FIRE PROTECTION	HPN				

DEPARTMENT OF THE NAVY
NAVAL FACILITIES ENGINEERING SYSTEMS COMMAND
MID-ATLANTIC
NAVAL FACILITIES ENGINEERING SYSTEMS COMMAND - MID-ATLANTIC
NAVAL STATION - NORFOLK, VA
NAVAL SUBMARINE BASE NEW LONDON
GROTON, CONNECTICUT
P-1102 WEAPONS MAGAZINE & ORDNANCE OPERATIONS FACILITY
TYPE G MAGAZINE
TELECOMMUNICATION AND SECURITY RISER
SITE ADAPTED

SCALE: AS NOTED
EPROJECT NO.: 1667770
CONSTR. CONTR. NO.
NAVFAC DRAWING NO. 12894239
SHEET 87 OF 91
T-601S

SECURITY LEGEND

SECURITY

- DC HIGH SECURITY DOOR SWITCH
- K KEYPAD
- M MOTION DETECTOR, CEILING MOUNTED
- M MOTION DETECTOR, WALL MOUNTED
- J RECESSED JUNCTION BOX
- J SURFACE JUNCTION BOX
- IDS IDS CONTROLLER
- IT IT CABINET
- ILD INTERNAL LOCKING DEVICE

NOTE: SECURITY SYMBOLS SHOWN ON DRAWINGS ARE SHOWN FOR COORDINATION PURPOSES AND ONLY INCLUDE ROUGH-IN FOR THE DEVICE. SECURITY SYSTEMS DEVICES, HARDWARE, SOFTWARE, AND WIRING ARE GFGI.

ABBREVIATIONS

BFC	BELOW FINISHED GRADE
CR	CARD READER
C	CONDUIT
EA	EACH
ER	EQUIPMENT ROOM
EX	EXISTING
GFCI	GOVERNMENT FURNISHED, CONTRACTOR INSTALLED
GFGI	GOVERNMENT FURNISHED, GOVERNMENT INSTALLED
IDS	INTRUSION DETECTION SYSTEM
MS	MOTION SENSOR
QU	QUANTITY
REQ'D	REQUIRED
RM	ROOM
SHT	SHEET
TR	TELECOMMUNICATION ROOM
TGB	TELECOMMUNICATION GROUNDING BUSBAR
TMGB	TELECOMMUNICATION MAIN GROUNDING BUSBAR
TBB	TELECOMMUNICATION BONDING BACKBONE
UNO	UNLESS NOTED OTHERWISE

SEPARATION DISTANCES BETWEEN DATA CABLES AND SPECIFIC EMI SOURCES

SOURCE OF DISTURBANCE	MINIMUM SEPARATION DISTANCE
FLUORESCENT LAMPS	6"
NEON LAMPS	6"
MERCURY VAPOUR LAMPS	6"
HIGH-INTENSITY DISCHARGE LAMPS	6"
ARC WELDERS	6"
FREQUENCY INDUCTION HEATING	40"

50' DISTANCE LIMIT RULE

IN NO CASE MUST A NON-LISTED OUTSIDE PLANT OR INCOMING SERIC SERVICE OUTDOOR RATED CABLE EXCEED 50 FEET FROM THE POINT OF ENTRANCE INTO ANY BUILDING. IF ON-SITE CONDITIONS RESULT IN A CASE WHERE THE CABLE EXCEEDS THE DISTANCE LIMIT THE CONTRACTOR MUST ADVISE A SOLUTION WITH THE PROJECT CONSULTANT. IN ALL CASES THE SOLUTION WOULD NEED TO INVOLVE EITHER TRANSITIONING FROM OUTDOOR NON-LISTED TO INDOOR LISTED CABLE VIA A SPLICE POINT (E.G. SPLICE CASE OR SPLICE ENCLOSURE FOR FIBIER, PROTECTOR BLOCK FOR COPPER ETC.) OR THE ALTERNATIVE MUST BE TO ENCLOSE THE OUTDOOR RATED CABLE WITHIN INTERMEDIATE METAL CONDUIT (IMC) OR RIGID METAL CONDUIT (RMC) THAT IS PROPERLY SEALED AND BONDED TO A GROUNDING ELECTRODE. RETAINING THE OUTDOOR CABLE WITHIN CONDUIT MUST EFFECTIVELY EXTEND THE POINT OF ENTRANCE INTO THE BUILDING.

OSP DETECTION TAPE INCLUSION

IN ORDER TO REDUCE THE CHANCE OF ACCIDENTAL DIG-UP OF OUTSIDE PLANT DUCTBANK ELEMENTS IN THE FUTURE, PROVIDE A DETECTABLE WARNING TAPE CONTAINING METALLIC TRACINGS ALONG THE DUCTBANK PATH AT 12" BELOW GRADE MINIMUM. COLOR OF THE DETECTABLE TAPE MUST BE ORANGE OR WHICHEVER COLOR THE COMMON GROUND ALLIANCE (CGA) HAS CURRENTLY DETERMINED FOR TELEVISION AND COMMUNITY ANTENNA TELEVISION (CATV) CABLES.

CONDUIT INSTALLATION NOTES

THE RACEWAY SYSTEM FOR TELECOM CABLE MUST FOLLOW THE NEC AND ALL LOCAL CODES GOVERNING THIS PROJECT. ADDITIONAL REQUIREMENTS ARE AS FOLLOWS:

1. A PULL CORD (NYLON, 1/8" MINIMUM) MUST BE INSTALLED WITHIN ALL CONDUITS.
2. CONDUIT MUST RUN IN MOST DIRECT ROUTE POSSIBLE, USUALLY PARALLEL WITH BUILDING LINES.
3. CONDUIT SLEEVES MUST BE RIGID GALVANIZED STEEL FOR PENETRATIONS OF CONCRETE SLABS, CONCRETE WALLS. ALL SLEEVES MUST BE RIGIDLY INSTALLED USING APPROPRIATE FITTINGS AND ALL PENETRATIONS MUST BE GROUTED AROUND THE SLEEVE. SLEEVES MUST PROJECT A MINIMUM OF 4" BEYOND WALL OR FLOOR SURFACE. ALL PENETRATIONS MUST BE FIRESTOPPED.
4. CONDUIT RUN MUST CONTAIN NO CONTINUOUS SECTIONS LONGER THAN 100 FEET. IF RUNS TOTAL MORE THAN 100 FEET, PULL POINTS OR PULL BOXES MUST BE INSERTED.
5. CONDUIT RUNS TO WORK AREAS MUST SERVE NO MORE THAN ONE COMMUNICATION OUTLET. DAISY CHAINING IS NEVER ALLOWED.
6. CONDUIT MUST HAVE NO MORE THAN TWO 90 DEGREES OF BENDS AT ANY POINT OR MORE THAN 180 DEGREES OF CUMULATIVE BENDS BETWEEN PULL POINTS.
7. INSTALL CONDUITS WITH A MINIMUM OF BENDS AND OFFSETS. BENDS MUST NOT KINK OR DESTROY INTERIOR CROSS SECTION OF RACEWAY. FACTORY MADE BENDS MUST BE USED FOR RACEWAY'S 1" TRADE SIZE AND LARGER. BENDS RADIUS MUST BE 6 TIMES INTERNAL DIAMETER FOR CONDUIT SIZES UP TO 2". A CONDUIT GREATER THAN 2" MUST HAVE BEND RADIUS AT LEAST 10 TIMES DIAMETER OF CONDUIT. DO NOT USE PULL BOX IN LIEU OF A BEND RADIUS. BEND RADIUS ON CABLING MUST ALWAYS BE MADE WITHIN THE CONDUIT.
8. DO NOT INSTALL CONDUIT OVER OR ADJACENT TO BOILERS, INCINERATORS, HOT WATER LINES, OR STEAM LINES.
9. REAM ALL CONDUIT ENDS AND FIT THEM WITH AN INSULATED BUSHING TO ELIMINATE SHARP EDGES THAT MAY DAMAGE CABLES.
10. AFTER INSTALLATION, LEAVE CONDUITS CLEAN, DRY AND UNOBSTRUCTED, REAMED AND FITTED WITH BUSHINGS.
11. ELECTRICAL METALLIC TUBING AND RIGID METAL CONDUIT ARE THE ONLY ALLOWED TYPES FOR INTERIOR BUILDING. FLEXIBLE METAL CONDUIT IS NEVER ALLOWED.
12. CONDUIT SYSTEM INSTALLATION:
    - 12.1. CABLE IN EXTERIOR, ABOVE GRADE LOCATIONS: RIGID GALVANIZED STEEL.
    - 12.2. INTERIOR LOCATIONS: EMT.
    - 12.3. CABLE BELOW GRADE: SCHEDULE 40 PVC.
13. ALL METALLIC CONDUITS MUST BE APPROPRIATELY GROUNDED AS SPECIFIED IN THE NEC. ANSI/TIA/EIA J-STD-607-B AND PER MANUFACTURER'S SPECIFICATIONS.
14. CLEARLY MARK EACH CONDUIT TO INDICATE THE TRADE INTENDED TO SUPPORT.
15. CABLE PATHWAY MUST NOT EXCEED 295 FEET. THE LENGTH MUST BE MEASURED FROM THE OUTLET IN THE WORK AREA TO PATCH PANEL IN THE RACK.
16. FOR OUTSIDE PLANT CONDUITS ROUTES PROVIDE A SITE LEVEL ACCESSIBLE HANDHOLE EVERY (2) 90 DEGREE BENDS OR 180 DEGREES IN BENDS TOTAL. DISTANCE BETWEEN EACH HANDHOLE MUST NOT EXCEED 600 FEET DISTANCE. DO NOT USE HANDHOLE IN LIEU OF A BEND RADIUS. BEND RADIUS ON CABLING MUST ALWAYS BE MADE WITHIN THE CONDUIT.
17. OUTSIDE PLANT LOCATIONS, ROUTES, AND PULL POINTS ARE INDICATIVE ONLY. REVIEW THE PROJECT SITE AND SUBMIT SHOP DRAWING FOR REVIEW BEFORE COMMENCING WORK.

GENERAL PROJECT NOTES

A. ALL MOUNTING HEIGHTS ARE TO THE CENTER LINE OF THE DEVICE BACKBOX UNLESS NOTED OTHERWISE.
B. ALL BOXES AND CONDUITS IN WALLS AND CEILINGS MUST BE FLUSH MOUNTED OR CONCEALED UNLESS NOTED OTHERWISE.
C. ALL EXTERIOR OUTLETS MUST BE WEATHERPROOF.
D. EXACT LOCATION OF ALL TELECOM OUTLETS LOCATED IN FURNITURE AND MILLWORK TO BE VERIFIED WITH ARCHITECT PRIOR TO INSTALLATION.
E. ELECTRICAL OUTLETS MUST BE PROVIDED WITHIN THREE FEET OF COMMUNICATION OUTLETS AT EQUAL HEIGHT.

SEPARATION DISTANCES BETWEEN POWER AND DATA CABLES

CONDITION	MINIMUM SEPARATION DISTANCE		
	< 2kVA	2-5 kVA	> 5kVA
UNSHIELDED POWER LINES OR ELECTRICAL EQUIPMENT IN PROXIMITY TO OPEN OR NONMETAL PATHWAYS.	5"	12"	24"
UNSHIELDED POWER LINES OR ELECTRICAL EQUIPMENT IN PROXIMITY TO A GROUNDED METAL CONDUIT PATHWAY.	2.5"	6"	12"
POWER LINES ENCLOSED IN A GROUNDED METAL CONDUIT (OR EQUIVALENT SHIELDING) IN PROXIMITY TO A GROUNDED METAL CONDUIT PATHWAY.		3"	6"
ELECTRICAL MOTORS AND TRANSFORMERS.			48"

CABLE SCHEDULE

CABLE	DESCRIPTION	USE
A1	COMPOSITE OSDP: 2PR 24AWG OAS, 4C 22AWG, 4C 18AWG, 4C 18AWG CMP	DOOR INTERFACE BOX OSDP
A2	COMPOSITE WEIGAND: 3PR 18AWG, 4C 16AWG, 6C 18AWG CMP	DOOR INTERFACE BOX WEIGAND
B	2PR 24AWG	RS485
C1	1PR 22AWG, SHLD + 2C 16AWG PWR	CARD READER OSDP
C2	6C 22AWG, SHLD	CARD READER WEIGAND
D	2C 18AWG CMP	DPS
E	6C 22AWG CMP	HSS/BMS
F	4C 18AWG CMP	REX
G	4C 16AWG CMP	24VDC LOCK POWER
H	2C 20AWG CMP	TAMPER
J	4C 20AWG, SHLD	ALARM SENSOR
K	3PR 18 AWG, SHLD	ALARM SENSOR
L	2C 16AWG, SHLD	LOWER VOLTAGE POWER
M	CATEGORY 6 UTP	VIDEO SURVEILLANCE

DOOR DEVICE SCHEDULE

ROOM NUMBER	DEVICE TYPE	DETAIL REFERENCE
TYPE G INTERIOR	BALANCED MAGNETIC SWITCH (BMS)	TY501S / C3
TYPE G INTERIOR	BALANCED MAGNETIC SWITCH (BMS)	TY501S / C3
TYPE G INTERIOR	BALANCED MAGNETIC SWITCH (BMS)	TY501S / C3
TYPE G INTERIOR	BALANCED MAGNETIC SWITCH (BMS)	TY501S / C3
TYPE G INTERIOR	CARD READER (CK)	TY501S / C1
TYPE G INTERIOR	BALANCED MAGNETIC SWITCH (BMS)	TY501S / C3

SYM	DESCRIPTION	DATE	APPR.

NAVFAC

SEAL

Jacobs
1100 NORTH GLEBE ROAD
SUITE 500
ARLINGTON, VIRGINIA 22201
571.218.1000
FAX: 571.218.1600

A/E INFO

APPROVED
FOR COMMANDER NAVFAC 8/14/2025

ACTIVITY
APPROVED BY LCDR ELIZABETH OLOKODE NAVFAC NLON FEAD DIRECTOR NEW LONDON, GROTON, CT

SATISFACTORY TO DATE 05/27/2025

DES RR	DRW TO	CHK MC	
PM/DM	SMS/CWJ		
BRANCH MANAGER	WRB		
CHIEF ENG/ARCH	JWJ		
FIRE PROTECTION	HPN		

DEPARTMENT OF THE NAVY
NAVAL FACILITIES ENGINEERING SYSTEMS COMMAND
NAVAL FACILITIES ENGINEERING SYSTEMS COMMAND - MID-ATLANTIC
NAVAL STATION - NORFOLK, VA
MID-ATLANTIC
NAVAL SUBMARINE BASE NEW LONDON
GROTON, CONNECTICUT
P-1102 WEAPONS MAGAZINE & ORDNANCE OPERATIONS FACILITY
TYPE G MAGAZINE

SECURITY LEGEND
SYMBOLS & ABBREVIATIONS

SCALE:
EPROJECT NO.: 1667770
CONSTR. CONTR. NO.
NAVFAC DRAWING NO.
12894240
SHEET 88 OF 91
TY001

FILE NAME: C:\pw_workdir\dms003\jacobs\d1708576\TY001.dwg LAYOUT NAME: TY001BS PLOTTED: Friday, June 13, 2025 - 10:12am USER: OGDENT

THESE DRAWINGS HAVE BEEN ADAPTED FROM APPROVED NAVFAC MUNITIONS STORAGE CONSTRUCTION DOCUMENTS, NAVFAC DRAWING NUMBERS 14145735 TO 14145738, APPROVED BY DDESB ON 24 SEPTEMBER 2024. JACOBS DOR RESPONSIBILITY AND SEAL APPLICABILITY IS LIMITED TO THE SITE ADAPTATIONS AND MODIFICATIONS MADE TO THIS DRAWING.

LEGEND

DC	HIGH SECURITY DOOR SWITCH
K	KEYPAD
M	MOTION DETECTOR, CEILING MOUNTED
M	MOTION DETECTOR, WALL MOUNTED
J	RECESSED JUNCTION BOX
J	SURFACE JUNCTION BOX
IDS	IDS CONTROLLER
IT	IT CABINET
ILD	INTERNAL LOCKING DEVICE

SHEET NOTES

1. ALL CONDUIT MUST BE RIGID GALVANIZED STEEL CONDUIT UNLESS INDICATED OTHERWISE.
2. EXPOSED CONDUITS ON EXTERIOR WALLS MUST BE PROHIBITED.
3. PROPOSED IDS VENDOR TO PERFORM COVERAGE CALCULATIONS, INCLUDING OBSTRUCTIONS, TO VERIFY QUANTITY AND LOCATION OF MOTION DETECTORS. FINAL LOCATIONS AND QUANTITIES OF MOTION DETECTORS TO BE INSTALLED PER IDS VENDOR SHOP DRAWINGS.
4. ALL CONDUITS WILL BE MINIMUM 1"C UNLESS NOTED OTHERWISE. REFER TO T-601 FOR CONDUIT SIZES.
5. CONDUITS WILL BE EXPOSED INSIDE THE MAGAZINE UNLESS INDICATED OTHERWISE. LOCATE CONDUITS AS HIGH AS POSSIBLE AND COORDINATE ROUTING WITH OTHER TRADES. JUNCTION BOXES WILL BE SURFACE MOUNTED.

KEYED NOTES

1. DOOR CONTACT FOR ECM DOOR. COORDINATE WITH DOOR MANUFACTURER FOR EXACT LOCATION AND ROUGH-IN REQUIREMENTS. COORDINATE WITH THE CONTRACTING OFFICER FOR THE CONNECTION OF THE BMS ON THE DOOR.
2. IDS BOLTWORDS SLEEVE IN PILASTER. PROVIDE EMPTY 1" CONDUIT TO IDS PULLBOX FOR WIRING BY GOVERNMENT.
3. RECESSED ROUGH-IN FOR FUTURE CCTV CAMERA. HOMERUN TO IT CABINET. MOUNT 12" ABOVE TOP OF SLIDING MAGAZINE DOOR.
4. EXTEND TWO 1-1/2" CONDUITS TO SITE POLE, LOCATION TO BE DETERMINED THROUGH COORDINATION WITH BASE SSO AND COMM SQUADRON, FOR PoE IP CAMERA AND PoE WIRELESS ACCESS POINT. POLE LOCATION AND CONDUIT ROUTE WILL BE LIMITED BY MAXIMUM CABLE LENGTH OF 295' FROM PATCH PANEL TO DEVICE. REFER TO DETAIL A1/T-501 AND A1/T-601. TO BE PROVIDED WHEN REQUIRED BASED ON CLASSIFICATION OF STORED MATERIALS. COORDINATE WITH CONTRACTING OFFICER. CONDUITS WILL EXIT THE MAGAZINE THROUGH THE SIDE WALL, PENETRATION OF THE FOUNDATION IS NOT PERMITTED.
5. EXTEND TWO 4" CONDUITS TO NEAREST TELECOMM MANHOLE. CONDUITS WILL EXIT THE MAGAZINE THROUGH THE SIDE WALL, PENETRATION OF THE FOUNDATION IS NOT PERMITTED.
6. SINGLE POINT GROUND BAR. REFER TO E-101.
7. MOTION DETECTOR WILL BE INSTALLED 3' FROM THE INSIDE FACE OF THE MAGAZINE DOOR.
8. MOTION DETECTORS WILL BE EVENLY SPACED FOR COVERAGE OF THE ENTIRE INTERIOR SPACE.
9. EXTERIOR EMERGENCY PHONE. REFER TO A3/T-501.
10. TELECOMMUNICATIONS GROUNDING CONDUCTOR IN CONDUIT.

ABBREVIATIONS

BMS	BALANCED MAGNETIC SWITCH
CCTV	CLOSED-CIRCUIT TELEVISION
HSS	HIGH SECURITY SYSTEM
IDS	INTRUSION DETECTION SYSTEM
ILD	INTERNAL LOCKING DEVICE
IT	INFORMATION TECHNOLOGY
PIR	PASSIVE INFRARED SENSOR
POE	POWER OVER ETHERNET
RGC	RIGID GALVANIZED STEEL CONDUIT
WAP	WIRELESS ACCESS POINT

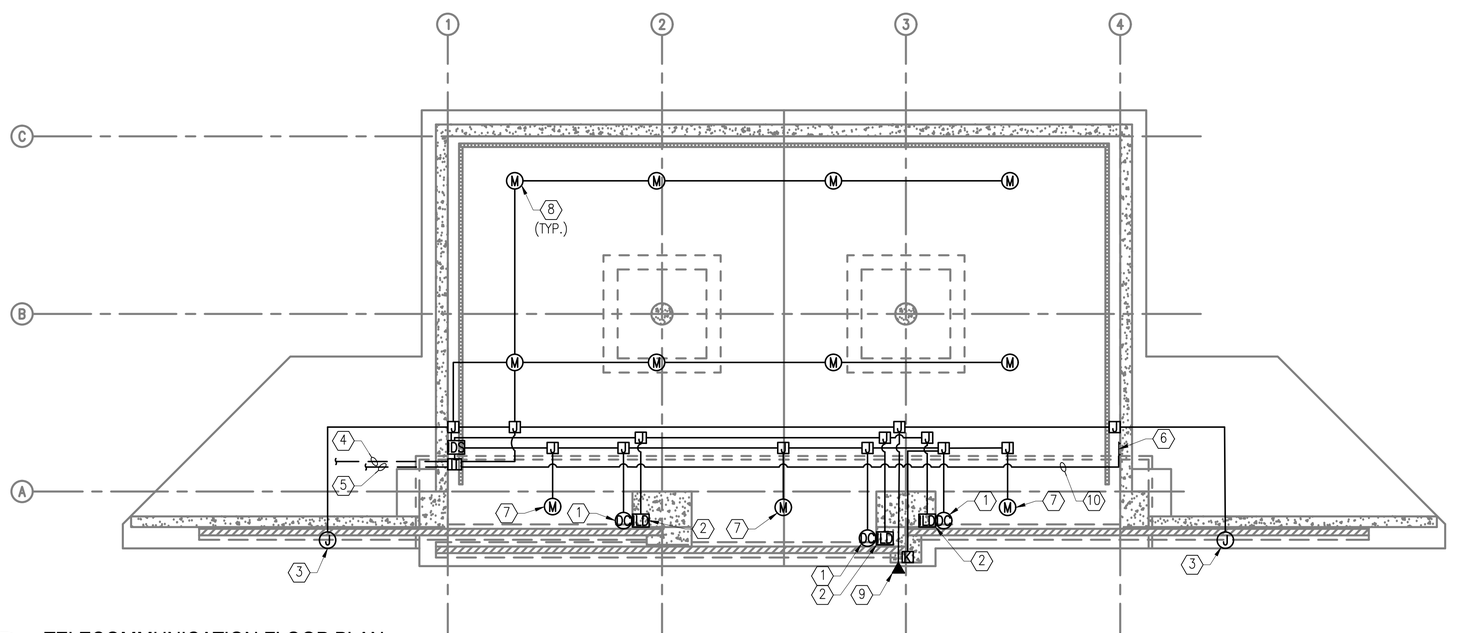

A1 TELECOMMUNICATION FLOOR PLAN
SCALE: 3/32" = 1'-0"

SYM	DESCRIPTION	DATE	APPR.

NAVFAC

REGISTERED COMMUNICATIONS DISTRIBUTION DESIGNER
6/23/2025
Bicsi
Rene Rubio
BICSI ID #112613
EXPIRES 12-31-26
RCDD
SEAL

Jacobs
1100 NORTH GLEBE ROAD
SUITE 500
ARLINGTON, VIRGINIA 22201
571.218.1000
FAX: 571.218.1600
A/E INFO

APPROVED
FOR COMMANDER NAVFAC 8/14/2025

ACTIVITY
APPROVED BY LCDR ELIZABETH OLOKODE NAVFAC NLON FEAD DIRECTOR NEW LONDON, GROTON, CT
SATISFACTORY TO DATE 05/27/2025

DES DS	DRW GC	CHK KD	
PM/DM	SMS/CWJ		
BRANCH MANAGER	WRB		
CHIEF ENG/ARCH	JWJ		
FIRE PROTECTION	HPN		

DEPARTMENT OF THE NAVY
NAVAL FACILITIES ENGINEERING SYSTEMS COMMAND
MID-ATLANTIC
NAVAL FACILITIES ENGINEERING SYSTEMS COMMAND - MID-ATLANTIC
NAVAL STATION - NORFOLK, VA
NAVAL SUBMARINE BASE NEW LONDON
GROTON, CONNECTICUT
P-1102 WEAPONS MAGAZINE & ORDNANCE OPERATIONS FACILITY
TYPE G MAGAZINE
SECURITY FLOOR PLAN

SCALE: AS NOTED
EPROJECT NO.: 1667770
CONSTR. CONTR. NO.
NAVFAC DRAWING NO. 12894241
SHEET 89 OF 91
TY101S

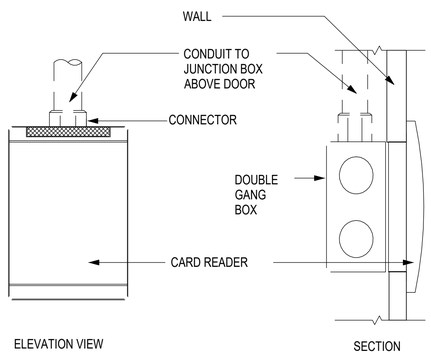

C1 CARD READER

SCALE: NO SCALE

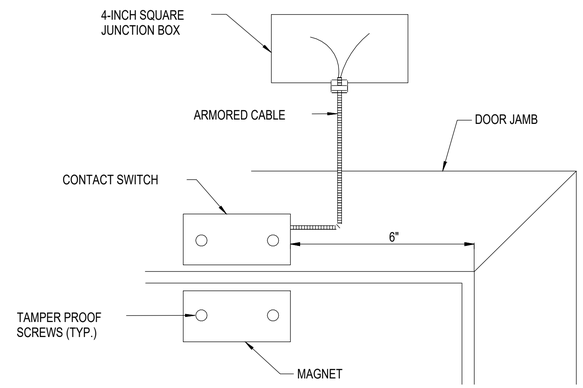

C3 SCREW MOUNT DOOR CONTACT

SCALE: NO SCALE

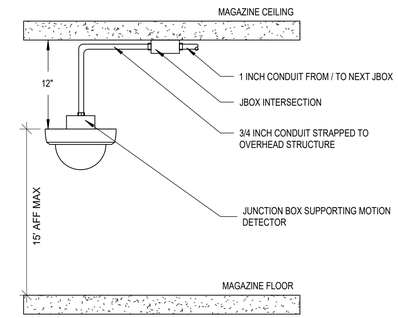

C5 CEILING MOUNTED MOTION SENSOR

SCALE: NO SCALE

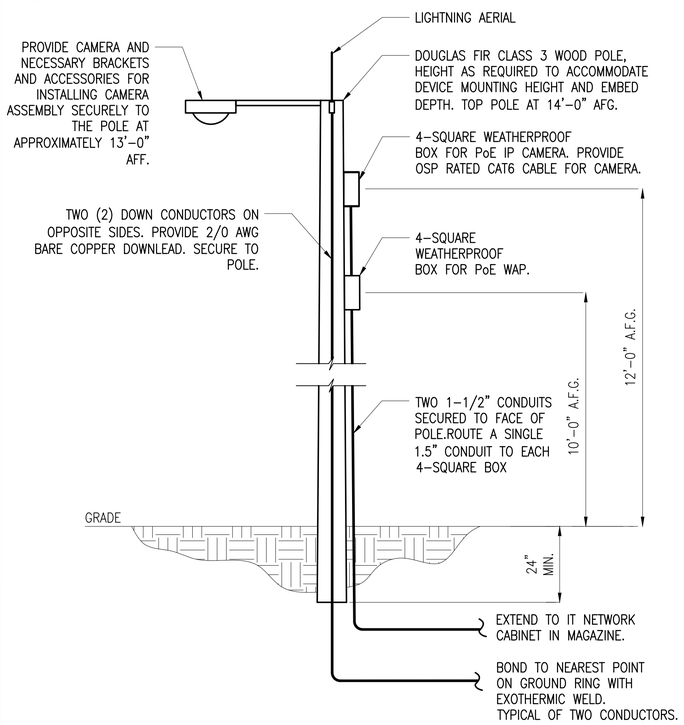

NOTE: CABLES INSTALLED IN UNDERGROUND CONDUITS MUST BE CONSTRUCTED FOR USE IN FLOODED ENVIRONMENTS. COPPER CABLES MUST INCLUDE PRIMARY ENTRANCE PROTECTORS AT BOTH ENDS AND RATED TO MATCH THE CATEGORY OF CABLE.

A1 POLE FOR SITE CAMERA AND WAP

SCALE: NO SCALE

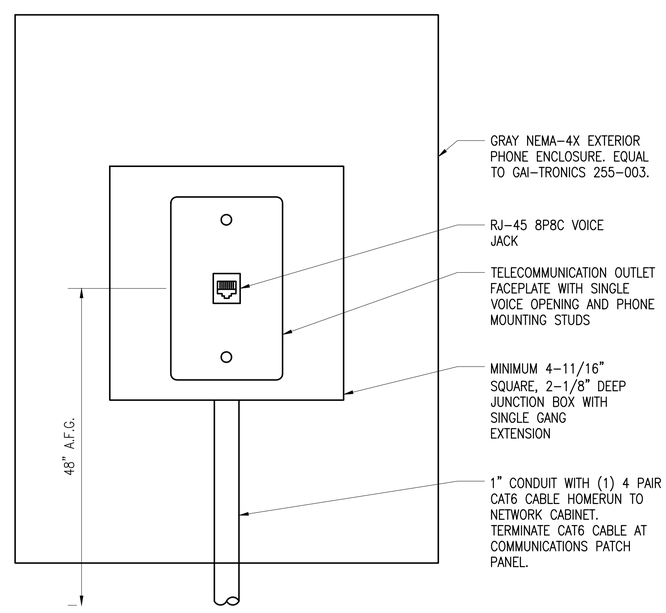

A3 VOICE WALL OUTLET

SCALE: NO SCALE

SYMBOL: ▼

THESE DRAWINGS HAVE BEEN ADAPTED FROM APPROVED NAVFAC MUNITIONS STORAGE CONSTRUCTION DOCUMENTS, NAVFAC DRAWING NUMBERS 14145735 TO 14145738, APPROVED BY DDESB ON 24 SEPTEMBER 2024. JACOBS DOR RESPONSIBILITY AND SEAL APPLICABILITY IS LIMITED TO THE SITE ADAPTATIONS AND MODIFICATIONS MADE TO THIS DRAWING.

SYM	DESCRIPTION	DATE	APRV

NAVFAC

REGISTERED COMMUNICATIONS DISTRIBUTION DESIGNER
6128318085
Bicsi
Rene Rubio
BICSI ID #112613
EXPIRES 12-31-26
RCDD
SEAL

Jacobs
1100 NORTH GLEBE ROAD
SUITE 500
ARLINGTON, VIRGINIA 22201
571.218.1000
FAX: 571.218.1600
A/E INFO

APPROVED
FOR COMMANDER NAVFAC 8/14/2025

ACTIVITY
APPROVED BY LCDR ELIZABETH OLOKODE NAVFAC N.LON FEAD DIRECTOR NEW LONDON, GROTON, CT

SATISFACTORY TO	DATE	05/27/2025	
DES DS	DRW GC	CHK KD	
PM/DM			SMS/CWJ
BRANCH MANAGER			WRB
CHIEF ENG/ARCH			JWJ
FIRE PROTECTION			HPN

DEPARTMENT OF THE NAVY
NAVAL FACILITIES ENGINEERING SYSTEMS COMMAND
MID-ATLANTIC
NAVAL FACILITIES ENGINEERING SYSTEMS COMMAND - MID-ATLANTIC
NAVAL STATION - NORFOLK, VA
NAVAL SUBMARINE BASE NEW LONDON
GROTON, CONNECTICUT
P-1102 WEAPONS MAGAZINE & ORDNANCE OPERATIONS FACILITY
TYPE G MAGAZINE
SECURITY DETAILS

SCALE:	AS NOTED
EPROJECT NO.:	1667770
CONSTR. CONTR. NO.	
NAVFAC DRAWING NO.	12894242
SHEET	90 OF 91

TY501S

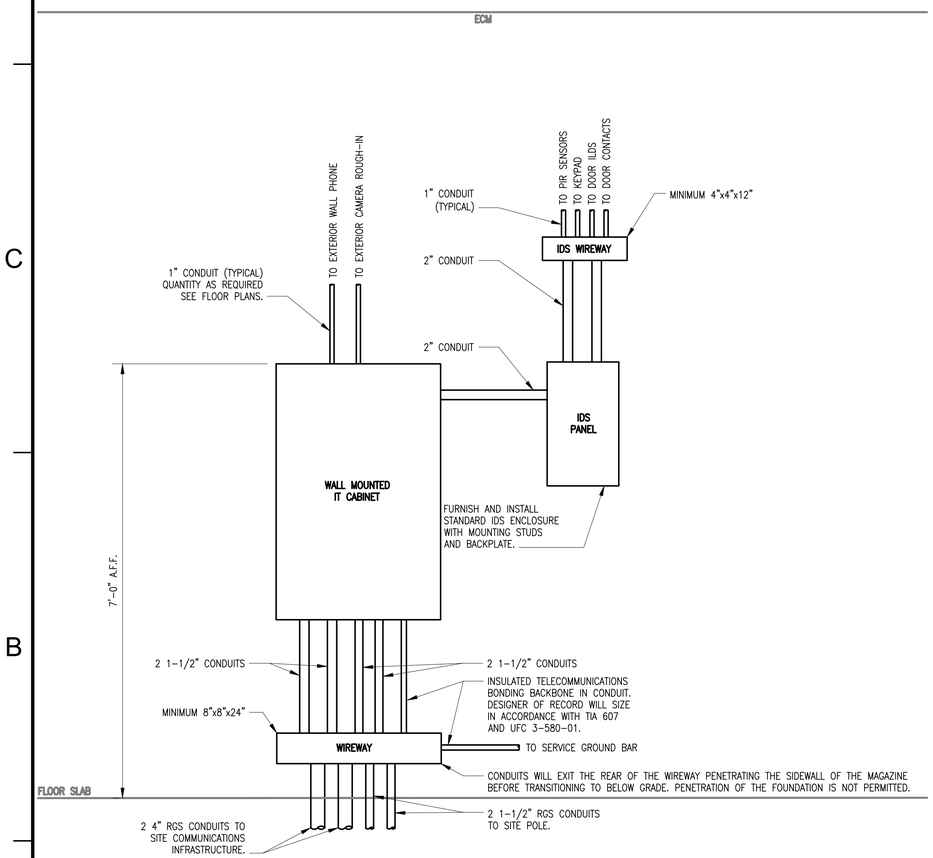

A1 TELECOMMUNICATION AND SECURITY RISER

SCALE: NO SCALE

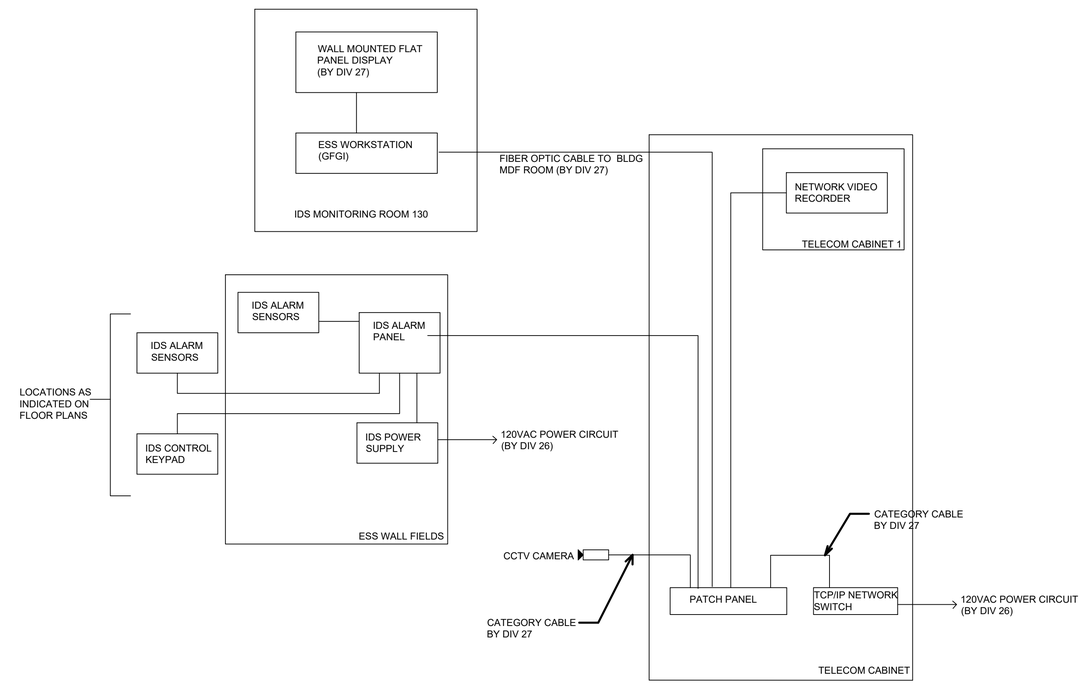

A3 TYPICAL ESS EQUIPMENT SCHEMATIC DESIGN

NTS

THESE DRAWINGS HAVE BEEN ADAPTED FROM APPROVED NAVFAC MUNITIONS STORAGE CONSTRUCTION DOCUMENTS, NAVFAC DRAWING NUMBERS 14145735 TO 14145738, APPROVED BY DDESB ON 24 SEPTEMBER 2024. JACOBS DOR RESPONSIBILITY AND SEAL APPLICABILITY IS LIMITED TO THE SITE ADAPTATIONS AND MODIFICATIONS MADE TO THIS DRAWING.

SYM	DESCRIPTION	DATE	APPR

NAVFAC

REGISTERED COMMUNICATIONS DISTRIBUTION DESIGNER
6123128085
Bicsi
Rene Rubio
BICSI ID #112613
EXPIRES 12-31-26
RCDD
SEAL

Jacobs
1100 NORTH GLEBE ROAD
SUITE 500
ARLINGTON, VIRGINIA 22201
571.218.1000
FAX: 571.218.1600
A/E INFO

APPROVED
FOR COMMANDER NAVFAC 8/14/2025

ACTIVITY
APPROVED BY LCDR ELIZABETH OLOKODE NAVFAC NLON FEAD DIRECTOR NEW LONDON, GROTON, CT
SATISFACTORY TO DATE 05/27/2025

DES DS	DRW GC	CHK KD	
PM/DM	SMS/CWJ		
BRANCH MANAGER	WRB		
CHIEF ENG/ARCH	JWJ		
FIRE PROTECTION	HPN		

DEPARTMENT OF THE NAVY
NAVAL FACILITIES ENGINEERING SYSTEMS COMMAND
MID-ATLANTIC
NAVAL FACILITIES ENGINEERING SYSTEMS COMMAND - MID-ATLANTIC
NAVAL STATION - NORFOLK, VA
NAVAL SUBMARINE BASE NEW LONDON
GROTON, CONNECTICUT
P-1102 WEAPONS MAGAZINE & ORDNANCE OPERATIONS FACILITY
TYPE G MAGAZINE
TELECOMMUNICATION AND SECURITY RISER

SCALE: AS NOTED
EPROJECT NO.: 1667770
CONSTR. CONTR. NO.
NAVFAC DRAWING NO. 12894243
SHEET 91 OF 91
TY601S