AGENCY SPECIFIC REQUIREMENTS
MOUNTAIN CITY, JOHNSON COUNTY, TENNESSEE

The Agency Specific Requirements (ASRs) do not reduce the minimum requirements contained within the Lease. These ASRs provides specific agency requirements, which may be complementary, more specific, or more stringent than those of the Lease minimum requirements. To the extent the contents of these ASRs conflict with the contents of the Lease, the more stringent requirement shall apply.

SECTION 1 ROOM SCHEDULE AND DESCRIPTION

1.01 ROOM SCHEDULE

A. The following spaces in these approximate sizes shall be provided by the Lessor:

B. Contiguous space on the first floor is preferred. If space above or below ground level (grade), a minimum of one (1) elevator meeting ABAAS is required and two (2) means of egress, preferably on opposite sides of the building, and in accordance with local and state code.

C. NRCS Staff numbers might reflect non-USDA partners where NRCS provides workspace to partners through agreement. Where non-USDA partners are present, joint signage reflecting both USDA agencies and NRCS non-USDA partner presence shall be provided upon request from the USDA on site as shared, joint signage, with the requirements specified in the USDA Signage Exhibit.

	FSA	NRCS	
TOTAL USE PERSONNEL	3	4	
SPACE TYPE			**TOTAL SQ. FT**
PRIVATE OFFICES (+/- 120 SF each)	1	1	240
OPEN WORKSTATIONS (+/- 78 SF each)	2	3	390
TOUCHDOWN WORKSTATIONS (+/- 24 SF each)	0	1	24
OFFICE CIRCUALATION			559
COMBINED CONFERENCE/BREAK ROOM			300
PUBLIC-FACING WAITING AREA W/COUNTERTOP			100
ADP/IT SERVER ROOM			75
MUDROOM			100
STORAGE - SECURED			200
***Minimum ABOA (Spaced used by USDA Only):**			**1,988**
****Maximum ABOA (Space used by USDA Only):**			**2,087**
*****MAXIMUM RSF (Rentable Square Footage):**			**2,286**

**Minimum ABOA includes 1.40 circulation multiplier*
***Maximum ABOA includes 1.05 applied circulation area*
****RSF includes common areas such as bathrooms, utility/mechanical rooms, vestibules and other space shared with non-USDA tenants*

1. **Private Offices (+/- 120 SF Each)**. Private offices shall be located immediately adjacent to the open office area.
   - **1** Private offices for FSA
   - **1** Private offices for NRCS

2. **Open Workstations Space (Guest Seated or Customer-Facing)**. All open workstations shall be contiguous for the agency and shall not be divided.
   - **5** Guest Seated (or Customer-Facing) Workstations (+/- 78 SF Each)
     - **2** for FSA
     - **3** for NRCS
   - **1** Touchdown Workstations (+/- 24 SF Each)
     - **1** for NRCS

3. **Filing Cabinets**: File cabinets may be located within the open office area, secured file storage, or partially in the open office area and in secured file storage.

4. **Restrooms**: Unless specifically called out in the table above as USDA dedicated restroom in the ABOA SF, restrooms shall be common shared spaces and incorporated into the agency RSF calculation. Refer to Lease Section 3 for restroom fixture requirements.

1.02 PARKING SCHEDULE

- Government Official Vehicle (GOV) Surface/ Outside Reserved Parking Space – **1**
- Producer/ Visitor Surface/ Outside Reserved Parking Spaces - **10**
- Employee Surface/ Outside Non-Reserved Parking Spaces - **7**

SECTION 2 CONCEPT DESIGN, ROOM DESCRIPTIONS AND FINISHES

2.01 CONCEPT DESIGN

A. INTENTIONALLY DELETED

B. INTENTIONALLY DELETED

C. The Lessor is responsible for using the room schedule in Section 1 of these ASRs and this layout to adapt the Governments requirement to the Space.

D. Specific questions regarding the layout should be directed to the Lease Contracting Officer or designee for resolution.

E. The Government shall not be responsible for errors, omissions, or assumptions made by the Lessor in the adaptation of the Government's requirements, concept design, test fit of space to the Lessor's space.

2.02 ROOM DESCRIPTIONS

A. Private Offices. Private offices shall be designed to accommodate one (1) individual seated at a desk, with space for two (2) additional seated guests. These Spaces are to be utilized by individuals who require acoustic and visual privacy for meetings and phone calls or tele/video conferencing.

1. Sound Transmission Class (STC) as specified in Lease.
2. Greater of three (3) double electrical outlets or local code.
3. Two (2) duplex telecommunication jacks, one on either side of the room.
4. Provide occupancy sensors as well as manual lighting controls.
5. Three (3) coat hooks on the wall next to the door.
6. An interior glass window with blinds shall be provided for visibility to the open office area and allow daylight to penetrate through to the open office areas while allowing the option for privacy. The size and location of the window shall be determined during design. The size and blind type, unless otherwise specified in the lease or requirements documentation shall be determined during design.
7. Keying/ Door Hardware requirements: All private offices shall be provided with an office function, individually keyed lock on the office master key. Reference Lease Section 5 for specific requirements.
8. Private offices shall have a minimum of 9'3" clear from the inside wall/ baseboard to inside wall/ baseboard to accommodate ABAAS clearances around USDA standard furniture installations.

DESIGN EXAMPLES – PRIVATE OFFICES

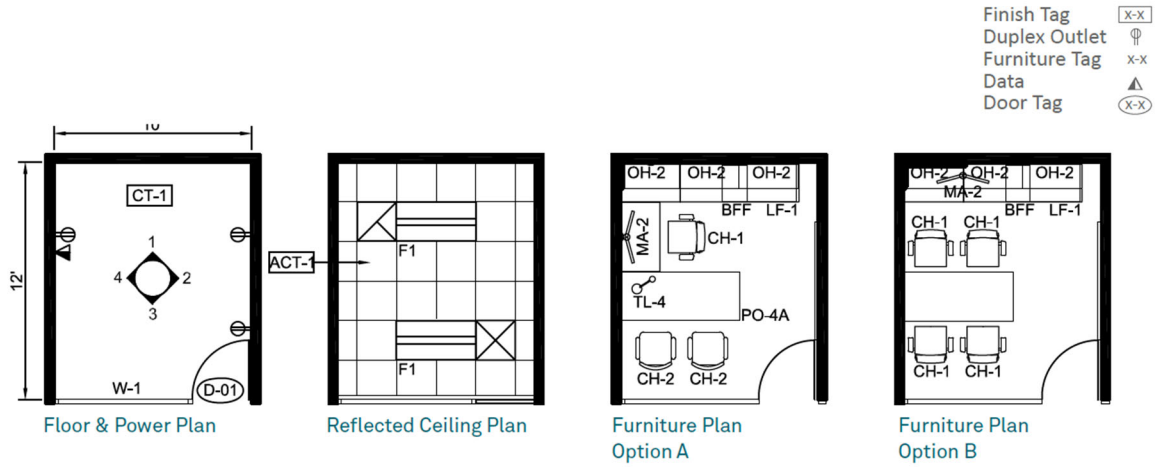

B. Open Office. A standard space for an individual to accomplish focused solo work and short-term collaboration work who spend most of their time at their desk. Individual workstations are provided in combination with easily accessible meeting spaces for group work and focus booths for concentration or private conversation. Pace near floor perimeter to maximize access to natural light.

1. This is open-plan office space where system (cubicle) furniture will be installed by the USDA in combination with touchdown stations as specified in Section 1.

a. Lessor shall ensure electrical and data connections are available to be hard wired to the USDA's planned systems furniture, and that additional power and data are available throughout to support office space uses, such as touch down stations, printer or plotter locations (final locations of printers and plotters to be coordinated with USDA during design), and occasional convenience outlets for office activities and ease of use for janitorial equipment power.

b. Lessor is responsible for providing an electrician to undertake or assist with the furniture installation connections of power and data to the systems furniture.

c. Data and electrical for systems furniture can shall be provided via ceiling drops (i.e. power poles) or wall connections with junction boxes prepared for USDA systems furniture whip connections. Floor boxes for provision of power and data to systems furniture may only be considered with prior written approval of the USDA LCO.

2. Coordinate locations of Wireless Access Points with USDA OCIO (IT), final quantity of locations to be determined during design by USDA OCIO based upon size and efficiency of the space layout. Provide CAT-6 data connection with face plate and RJ-45 connector in the ceiling at each location indicated for a Wireless Access Point during design.

3. Flooring design load shall be able to accommodate storage for USDA lockable filing cabinets.

4. Mailroom functionality should be located within or adjacent the open office area. To support office functions within the Space:

a. USDA is locating (**1-2**) standard multi-functional (MFD) printer / copier devices within the open office area and may location (1) postage meter(s). The Lessor shall coordinate these locations during design and ensure that each location is provided with power and data for MFD and postage meter functionality.

b. USDA may locate (**1**) engineering plotter within the open office area. The plotter size shall be determined during design. The Lessor shall coordinate this location during design and ensure that each location is provided with power and data for plotter functionality.

c. Lessor shall install a minimum of (1) lower cabinet and hardware with countertop and a minimum of (1) upper cabinet(s) and hardware with under cabinet lighting adjacent to the MFD within the open office area.

5. See workstation and touchdown station standard dimensions and options below.

DESIGN EXAMPLES – OPEN OFFICES

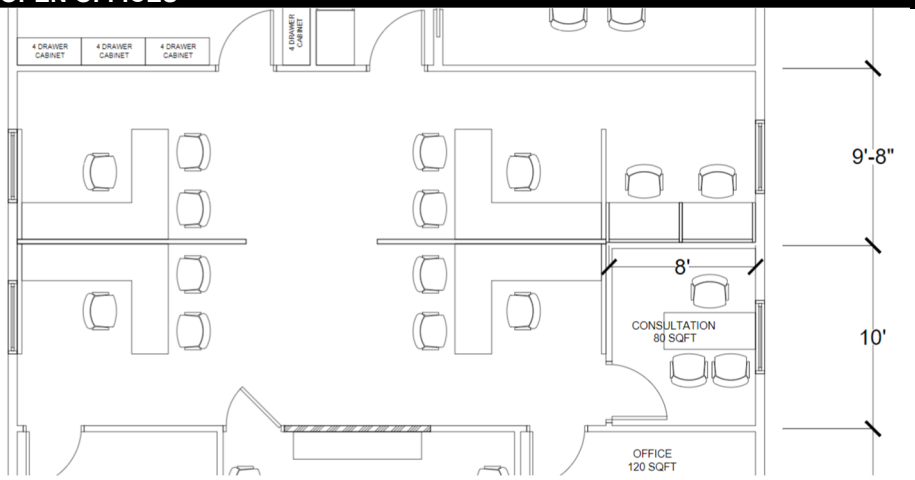

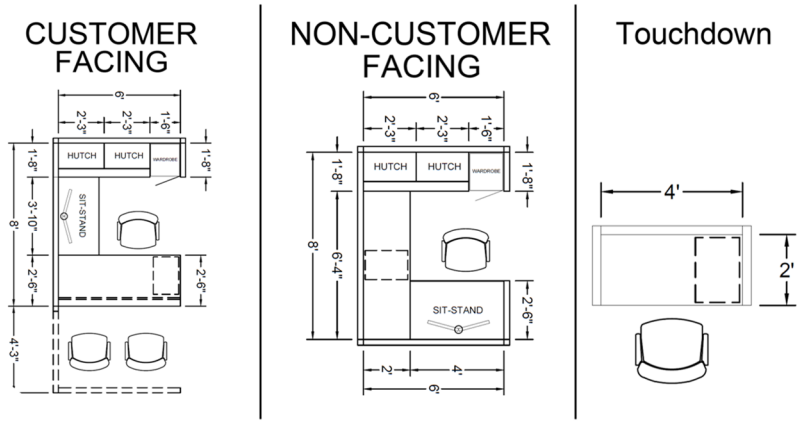

C. Conference Room. Meeting rooms for 8-10 people for large meetings, tele/videoconferencing, as well as presentations. Locate centrally within the office and adjacent to the reception/service desk to provide immediate access for invited guests. Ideally, locate close to the break area for convenience for invited guests. Consider locating doors off the open office area for acoustic privacy. Provide access to daylight when possible.

1. Sound Transmission Class (STC) as specified in Lease.
2. Provide the greater of five (5) double electrical outlets along the walls, or local code.
3. Two (2) telecommunication floor boxes, providing (4) data jacks and (4) outlets through the floor. An alternate design with (1) floor box may be considered with written approval by the LCO for layout efficiency purposes, but quantity of floor boxes shall not impact the total quantity of provided data jacks and power outlets.
4. Lessor shall provide data jack and audio-visual (A/V) connection for installation of a wall mounted television to use for presentations. Lessor is responsible for maintenance of connections/wiring and data jack, but television is the property of USDA and is to be installed and maintained by USDA.
5. Provide six (6) coat hooks on the wall next to the door.
6. Provide occupancy sensors as well as manual lighting controls.
7. Install Chair rail/ molding to protect walls
8. Install interior glass window with blinds for visibility to the open office area and allow for daylight to penetrate through while allowing the option for privacy. Window type, size and quantities will be determined during design.
9. Flooring, wall coverings, and window coverings according to Lease.
10. Keying/ Door Hardware requirements: Provide storage function cipher lock with individual and Master Key with turn-thumbed lock and keyed override. Door shall be self-closing.

DESIGN EXAMPLES – CONFERENCE ROOM

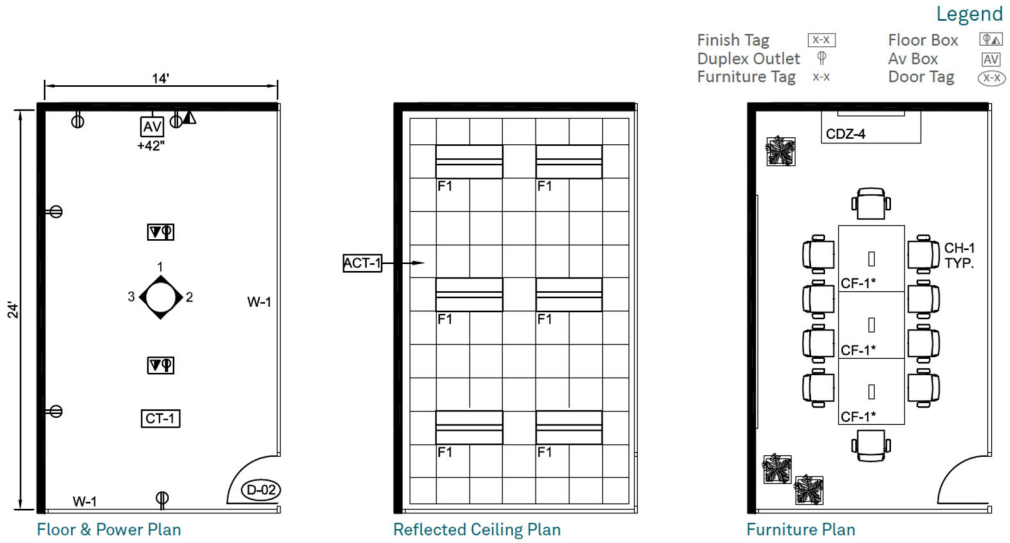

D. INTENTIONALLY DELETED

E. Breakroom. An enclosed or semi-private space to serve as designation for refreshment. The space is provisioned to support food preparation and storage, coffee machines and trash and recycling bins. Seated area shall be provided for socialization. Space shall be centrally located and adjacent to the conference room. Some enclosure is necessary to reduce transmission of noise and smells into the workplace. Where there is a glass window, blinds shall be provided to limit visibility from the outside looking in while allowing for daylight to penetrate through.

1. Sound Transmission Class (STC) as specified in Lease.
2. Provide the greater of **TWO (2)** double electrical outlets or the number of outlets required by local code, in addition to the outlets required for refrigerator/freezer and microwave. Outlets shall be provided at counter per local code. Ensure outlet design includes GFCI outlets as required by state and local codes.
3. INTENTIONALLY DELETED
4. Provide occupancy sensors as well as manual lighting controls.

5. Include waste, compost and recycling bins (according to lease).
6. Flooring, wall coverings and window coverings according to lease.
7. Where moisture or water (such as behind sinks) is present, a splash-guard or moisture resistant wall covering shall be installed and shall coordinate with other room finishes.
8. Cabinets and Countertops:
   a. Provide standard modular cabinet sizing.
   b. Provide a minimum of **six-feet (6'0")** of counter with base and overhead cabinets. The countertop shall be cut-out to accommodate a sink.
   c. Countertop with backsplash shall be of a standard depth to match the cabinets. Finish shall coordinate with cabinets and finish colors.
9. Appliances. Lessor shall provide, install, and maintain as part of operations and maintenance of the Premises, the appliances below. The Lessor shall retain ownership of these items, and associated costs shall be included in Operating Expenses on the form Lessor's Annual Cost Statement, GSA Form 1217.
   a. **ONE (1)** breakroom refrigerators with freezer (at least 18 cubic foot in size), Energy Star® and ADA compliant. (Example: GE Profile Energy Star® ADA compliant top freezer (or equal). May be stainless steel, white, or black to correspond with finishes.
   b. **ONE (1)** breakroom countertop microwave ovens (2.2 cubic foot minimum in size). (Example: GE Profile or equal). May be stainless steel, white, or black to correspond with finishes.
10. Plumbing (may include, but is not limited to):
   a. The Lessor shall provide and install a garbage disposal unit in the kitchen sink at the Premises. The garbage disposal unit shall be of a size and capacity suitable for typical commercial use and comply with all applicable local building and plumbing codes.
   b. INTENTIONALLY DELETED
   c. The Lessor shall install an ADA compliant **single-bowl sink**, undermount stainless steel in the breakroom. The sink shall be large enough to accommodate handwashing of mugs, dishes, and utensils typically used during break periods. The dimensions of the sink shall be selected to ensure a minimum basin depth and bowl size that allows for submerging a standard coffee mug or dish.
   d. The Lessor shall provide and maintain a breakroom faucet equipped with hot and cold running water. The faucet shall include a retractable hand-held spray option designed to facilitate cleaning and rinsing of dishes, utensils, and the sink area. The installation shall comply with all applicable building codes, health, and safety standards. The Lessor shall ensure the faucet remains in good working order throughout the term of the lease, performing all necessary repairs or replacements.
11. Keying/ Door Hardware requirements: Provide office function, individually keyed lock on USDA suite master key.

DESIGN EXAMPLES – BREAKROOM

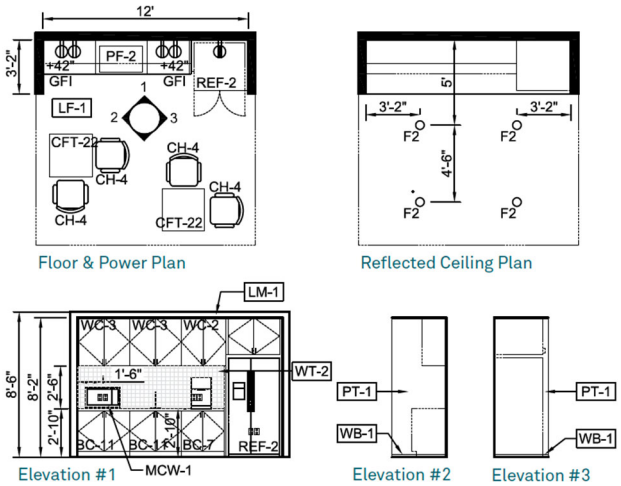

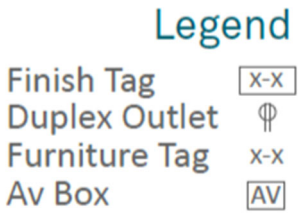

F. Public-Facing Waiting Area with Countertop. The Public-Facing Waiting Area serves as a welcoming space for both employees and guests. It serves as a buffer zone between public and private areas within the office. The Public-Facing Waiting Area counter shall be located adjacent to the main entrance or elevator lobby.

1. This area shall display USDA branding and identity. Lessor shall provide blocking for USDA bulletin board installation; location(s) to be determined during design.
2. The Public-Facing Waiting Area shall be located adjacent to the building entry and/or elevator lobby. The Public-Facing Waiting Area shall be adjacent to at lease one (1) meeting or conference room. Refer to Section 5 of this ASR EXHIBIT for appropriate security countermeasures.
3. Sound Transmission Class (STC) as specified in Lease.
4. Electrical outlets according to local code.
5. INTENTIONALLY DELETED
6. INTENTIONALLY DELETED
7. Provide power and data ports along the inside (USDA-suite facing side) of the customer service counter and window.
8. Provide hard surface, slip-resistant flooring.
9. Keying/ Door Hardware requirements:
   a. Perimeter door locks must be either electronic access control, high security cipher, or high-security mechanical locks, preferably with a dead-bolt. Cipher locks are highly encouraged to avoid the need to issue keys.
   b. On door between the reception area and the USDA-internal office area, provide storeroom function cipher lock with key override on Masterkey with rest of the USDA suite. The Door shall be self-closing.
10. See Physical Security Requirements in Section 5 of this ASR for additional information regarding counter, exterior door keying, and sightline design requirements.
11. Ensure **(1) WORKSTATION PER AGENCY** is/are located within line of sight of the customer counter/ window(s) to allow for a staffed reception area.
12. The Lessor shall provide, install, and maintain a doorbell system with one (1) doorbell for each USDA agency housed on-site, with the doorbell annunciator communicating with the open office area of its dedicated agency. Signage shall be provided to direct customers to the appropriate doorbell for USDA-FSA, NRCS, etc.,

DESIGN EXAMPLES – PUBLIC-FACING WAITING AREA

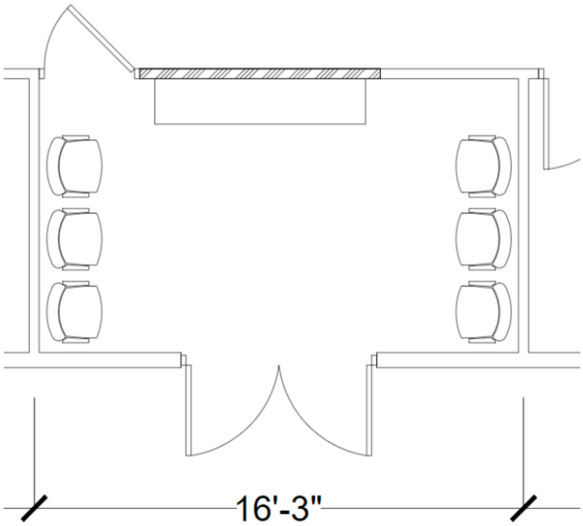

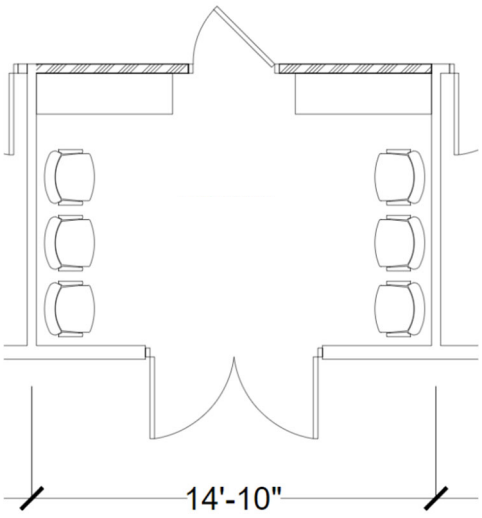

G. Secure Storage. This room is for equipment or other content that needs to be securely stored, but easily accessible within the office. Size and type of storage units will vary depending on content requirements.

1. Room shall not be accessible through the ceiling to prevent “up and over” access. Utilize slab-to-slab walls or installation of steel mesh to prevent intrusion. All walls shall be full-height walls, floor-to-deck. Where existing walls are reused during design for enclosing this room, existing walls shall be topped off to go to deck. Alternative designs to meet this requirement would need prior, written approval from the USDA LCO before application to the project design.

2. Sound Transmission Class (STC) as specified in Lease.
3. Solid core door with door hinges installed inside the room. No windows or other openings.
4. Fire extinguisher shall be supplied, installed, and maintained by the Lessor.
5. Greater of three (3) double electrical outlets or local code.
6. Provide occupancy sensors as well as manual lighting controls.
7. Provide duplex data jacks every 10' on the walls, located at opposite sides of the room, for future flexibility of function in this space.
8. Flooring and wall coverings according to Lease.
9. Keying /Entry Keying / Door Hardware requirements: Provide storeroom function cipher lock with keyed override, individually keyed and on the USDA suite Masterkey. Door shall be self-closing.

DESIGN EXAMPLES – SECURED STORAGE

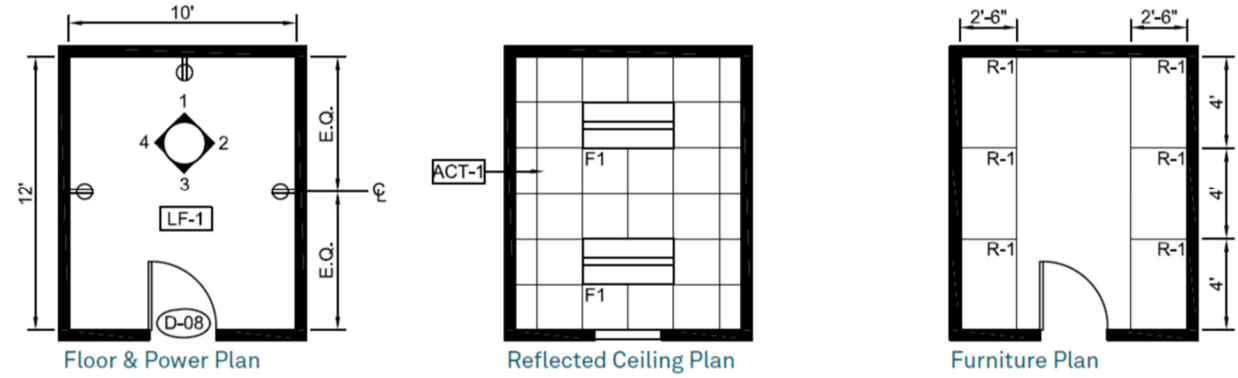

H. INTENTIONALLY DELETED

I. INTENTIONALLY DELETED

J. INTENTIONALLY DELETED

K. **Mud Room**: This room should provide complete visual and acoustic privacy and should be located away from open offices areas. Locate near lavatories or existing plumbing.

1. Sound Transmission Class rating as specified in Lease.
2. Provide exterior door with exterior convenience power and water connections adjacent to the mud room exterior door. Where this configuration is not possible, provided mud room directly adjacent to an exterior door with non-slip hard surface flooring for circulation to the mud room door. Location to be determined during design.
3. Install mop sink and standing height utility sink for cleaning and washing field equipment. Location to be determined during design.
4. Install Commercial-grade retractable spray hose between mop and utility sinks: Provide faucet with threaded end for hose connection. Water supply and drainage required. Hot water required.
5. Electrical outlets per local code.
6. Provide SIX (6) coat hooks on the wall next to the door.
7. Provide occupancy sensors, as well as manual lighting controls.
8. The room should have a dedicated exhaust fan with a timer or humidity sensor, separate from the light circuit, for proper moisture control.
9. Provide non-slip floors. Wall coverings, and window coverings according to Lease.
10. Provide exterior entry door with cipher lock and individually keyed override, on the USDA suite master key.
11. Keying / Door Hardware requirements Provide office-function with occupancy indicator, individually keyed lock on USDA suite master key for the mud room door, with the key side of the lock facing the interior of the mud room to prevent unrestricted entry through the exterior door into the open office space, if access is gained through the cipher lock.

DESIGN EXAMPLES – MUDROOM

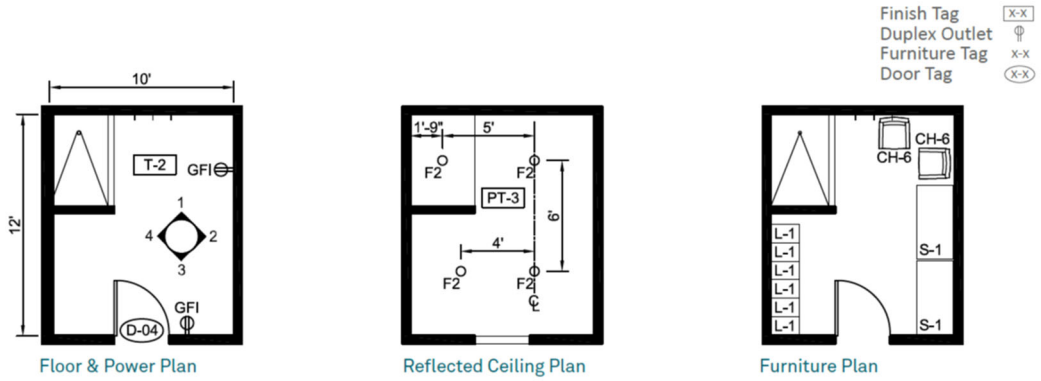

Floor & Power Plan | Reflected Ceiling Plan | Furniture Plan

L. INTENTIONALLY DELETED

M. INTENTIONALLY DELETED

2.03 FINISHES

The following finishes shall apply throughout the USDA space, unless otherwise noted.

A. Flooring.

1. Carpet tile **All spaces except the ADP room, and those rooms noted for hard surface and anti-slip hard surface flooring below.
2. Hard surface flooring, commercial grade phthalate free Luxury Vinyl Tile, 2.5mm minimum thickness, Tarkett or equivalent. ** Exterior entryways, reception, and corridors between the exterior entryway and the mud room.
3. ADP (Server) Room Flooring shall be in accordance with the ADP and Wiring Guidelines Exhibit. Roppe ESD vinyl static control tile or equivalent.
4. Anti-slip hard surface flooring, phthalate free Tarkett Primo Safe-T or equivalent. ** Restrooms, Mud room.

B. Baseboard. 4" Vinyl or rubber – provide coved base for hard surface areas and straight base for carpeted floor. Phthalate free Roppe or equivalent.

C. Casework. Laminate, soft close doors and drawers, with commercial grade finishes for ease of cleaning and durability. (Kitchen, built-ins)

D. Counters. Solid Surface or Laminate.

E. Paint. a minimum of 3 coats of Low-VOC latex by Sherwin Williams or equivalent, commercial grade, applied in accordance with manufacturer's specifications. Provide eggshell finish in low traffic areas and satin in high traffic areas. The mud room, break room, and other "wet" areas shall be provided with semi-gloss finish.

F. Blinds. Provide commercial grade blinds of professional appearance.

G. Drywall ceiling. Provide moisture-resistant drywall ceiling in the mud room with flat latex paint finish.

SECTION 3 TENANT IMPROVEMENTS

REQUIRED FEATURES NOT INCLUDED IN SHELL COSTS: For all of these items, purchase and installation should be included in the Lessor's Tenant Improvement costs and ongoing maintenance should be an Operating Cost included on GSA Form 1217.

3.01 DATA AND TELECOMMUNICATIONS REQUIREMENTS.

As outlined in the Lease, the Lessor shall install and maintain all telecommunications requirements such as development of the IT/ ADP room, CAT wiring, etc.

3.02 MAILBOXES

The Lessor shall provide, install, and maintain separate mailboxes for each USDA agency in the Premises, unless the Lessor is able to negotiate for secured in-office mail delivery and pick-up to and from the USDA with the U.S. Postal Service (USPS). The mailboxes shall be lockable and acceptable to both USDA and USPS and ADA compliant. The incoming mailboxes shall be of sufficient size to accept a single package of 9" wide x 11 ½" deep x 12" high, or a separate common oversized mailbox of that minimum size must be provided. A separate lockable outgoing mailbox capable of holding outgoing parcel of a minimum of 9" wide x 11 ½" deep x 12" high shall also be provided by Lessor. Location and design shall be approved by LCO or designated representative. The Lessor is responsible for coordinating with the USPS for approvals on mailbox design, type, locking device requirements, and location.

MAILBOX EXAMPLE 1	MAILBOX EXAMPLE 2
Interior apartment-style with hopper style collection box. This option will not fit large outbound packages to USPS. Tenant would be required to deliver large packages to the post office.	Exterior large capacity mailbox. This option will fit large outbound packages for USPS pick-up.
	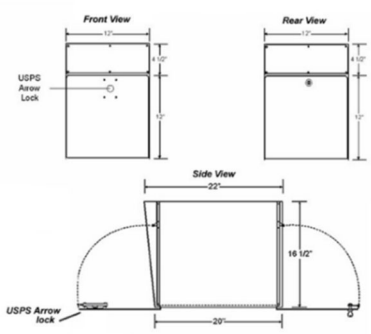

3.03 DEPOSITORY DROP BOX

Lessor to install and maintain an exterior locking depository drop box. Drop box should be secure and provide for the ability for receipt of documents from exterior of building without entering interior areas of the building. Location and design must be approved by the USDA Lease Contracting Officer or designated representative.

3.04 SIGNAGE

Lessor to provide and maintain interior and exterior signage as outlined in the USDA Facility Signage Guide as furnished by the government.

A. The monument sign must be such that the sign is visible from both directions of traffic. Where the USDA location is in a strip mall or business campus, location of the signage in the mall / campus pylon sign is acceptable, as long as the sign is large enough to be legible and is able to comply with the USDA Signage Exhibit.

B. Sign locations and design shall be approved by LCO or designated representative prior to installation.

C. Should the location of the leased Premises not be evident to customers parking in the parking lot, the Lessor shall install and maintain directional or wayfinding signage from the parking area to the Premises.

D. Vector images of USDA lockup and logo shall be available upon request.

E. The Lessor shall confirm USDA desired text on exterior and interior signage through the submittal process prior to signage installation.

3.05 ADDITIONAL FIRE PROTECTION AND LIFE SAFETY COUNTERMEASURES

Lessor shall provide, install and maintain fire extinguishers, smoke detectors, carbon monoxide detectors, and automated external defibrillator (AED).

3.06 CIPHER LOCKS

Lessor shall provide and maintain keyless locking system/ mechanisms (i.e., cipher locks) in the following locations, all staff exterior access doors, the door between the reception room and the USDA internal open office area, the mud room exterior door, file storage doors (as many as are designed into the lease), public restrooms where restrooms are located in the common area/ otherwise acceptable by the public, and the ADP (IT Server Room) door. Cipher lock system shall provide for coded access to USDA space and shall have the following features:

A. Provide keyless entry to authorized personnel only, with keyed entry for emergency backup when the batteries expire.

B. All cipher locks shall be provided with individual keys and shall be keyed to the USDA office master key, except the ADP room door.

C. The ADP room door shall be provided with an individually keyed lock and shall not be incorporated with master key functionality.

D. Ability for local staff to change codes as needed.

E. If installed on main entry door, ability for local staff to turn off the need for a code during normal work hours.

F. Ability for local staff to lock door from exterior without having to use a physical key.

G. Provide emergency manual locking mechanism on interior door in case of security emergency.

H. Lessor will provide all maintenance and battery replacement.

I. A copy of cipher lock instruction manual provided to local staff.

J. Lessor retains ownership of system after lease termination.

3.07 INTENTIONALLY DELETED

3.08 INTENTIONALLY DELETED

3.09 INTENTIONALLY DELETED

3.10 INTENTIONALLY DELETED

3.11 PARKING LOT REQUIREMENTS

All USDA required parking spaces shall be freshly striped. All reserved spaces shall be designated by post-mounted or painted signage. The Lessor shall maintain the parking lot and parking lot signage in good/ like-new condition through the term of the lease as part of operations and maintenance of the Premises, up to and including milling and paving will be required where patching/repairs are not sufficient.

3.12 CONSTRUCTION SUBMITTALS

The following submittals are required to be provided during the construction of Tenant Improvement:

A. Permit

B. Mailbox location and design.

C. Security System (IDS) System

D. Signage Submittal

E. HVAC Test and Balance Results

F. Staff training and user manuals on:

   1. Security System
   2. Cipher Lock programming

G. Lease Administration/ Emergency Points of Contact and Procedures.

SECTION 4 SHELL COSTS

4.01 SHELL DEFINITION FOR GENERAL BUILDING USE

The building shell is defined as the complete enveloping structure, base building systems, and the finished common areas (building common and floor common) of a building that adjoin the occupant areas.

Base Building	Occupant Areas
Base structure and building enclosure components (windows with exterior finishes) are complete.	Broom-clean concrete floor slab, with a flat and level floor.
Base building mechanical, electrical and plumbing systems (e.g., central fire alarm, chiller plant, cooling tower) are complete and functional.	Gypsum wallboard, spackled and prime painted, on exterior perimeter walls and tenant demising walls, without suite entry door.
All common areas, such as lobbies, elevators, fire egress corridors and stairwells, garages, and service areas are complete. (Circulation corridors are provided as part of the base building only on multi- tenanted floors where the corridor is common to more than one tenant. On single tenant floors, only the fire egress corridor necessary to meet code is provided as part of the shell.)	Suspended acoustical ceiling system including grid and lay-in tiles (or other building standard). Lighting luminaires should be installed in the ceiling grid for an open office plan at the rate of one fixture per 80 USF.3 Lighting controls with ambient lighting adjusted per daylight availability, occupancy, vacancy, or other building automation system signals.
Building common restrooms are complete and operational.	
Building cores on each floor with assignable space contain the following: tappable domestic water riser, service sanitary drain, sanitary vent, ready for extension to tenant- demised areas. Electrical power distribution panels and circuit breakers available in an electrical closet, with capacity at 120/208 volt, 3- phase, 4-wire providing 4 watts per USF excluding lighting and HVAC. Designated connection point to the central fire alarm system for extension to tenant- demised areas. Distribution backboard within a wire closet for connection to tenant's telephone lines. Vertical conduit (empty sleeve) through building core, available for tenant wiring and cabling.	Central heating, ventilation, and air conditioning (HVAC) systems are installed and operational, including, as appropriate, main and branch lines, variable air volume boxes, dampers, flex ducts and diffusers, for open office layout. Conditioned air through medium pressure ductwork at a rate of .75 cfm per square foot of usable area is provided. Sprinkler mains and distribution piping in a protection layout (open plan) with heads turned down, concealed with an escutcheon or trim plate, are installed.

4.02 REQUIRED FEATURES TO BE INCLUDED SHELL COSTS

For all these items, purchase and installation should be included in Shell rent.

A. Shell costs for specific building assemblies are covered under Section 2 of the Lease.

B. The leased Premises must comply with accessibility requirements set forth in Section 2.13 of the Lease at the time of lease commencement and throughout the period of performance.

C. INTENTIONALLY DELETED

D. Parking lot requirements: all USDA parking areas shall be paved or asphalt, or other hard surface pavement such as pervious paving to be approved as an alternate in writing by the USDA Lease Contracting Officer or designated representative. All drives and access roads leading into the USDA parking area from the main road shall be paved or asphalt. All USDA non-reserved parking spaces shall be freshly striped.

   a. INTENTIONALLY DELETED

   b. Maneuverability: Sufficient space to allow for turning movements within the parking space itself, eliminating the need for backing up.

   c. Entrance and Driveways: Wide enough to accommodate the turning radius the turning radius of large vehicles ensuring smooth traffic flow throughout the site.

   d. Clearance: Free from obstructions both overhead (no low-hanging structures) and on the ground (no posts, curbs, or other obstacles) in both the front and rear of the parking space. This facilitates easy entry and exit for large vehicles.

e. INTENTIONALLY DELETED

4.03 BOTTLE FILLING STATION REQUIREMENTS

The ADA/ABAAS height water fountain shall be replaced (if existing) or upgraded over the standard water fountain (if going in as new) to an ADA compliant stainless steel refrigerated cooler with bottle filling station. (Example: Elkay Model LZS8WSSP-W1 or equivalent.)

SECTION 5 PHYSICAL SECURITY REQUIREMENTS

In addition to the specifications set forth in Section 7.01 of the Lease, the Lessor is required to install the necessary improvements to meet the below requirements. Costs associated with the purchase and installation of improvements are considered Tenant Improvements (TI) and should be reflected in the Tenant Improvements Costs Summary (TICS) table. Costs to operate and maintain these improvements are considered operating expenses and should be reflected in the Lessor's Annual Cost Statement (GSA Form 1217).

A. **Hardened Customer Service Counter:**

1. A Hardened Customer Service Counter (installed in drywall or other permanent wall construction) with a lockable sliding glass Service Window shall be installed to separate the public lobby area from employee workspace. It shall be designed in a way that customers cannot access USDA space (on the other side of the counter) unless permitted entry through a locked door.
2. This counter shall be a hardened barrier that requires employees to enter through a locked door to enter from the public side of the counter into USDA employee space. The door shall be self-closing, shall have a cipher lock with keyed override on the USDA suite Masterkey, and remain secured at all times. The counter shall be 42" to 48'' high but must also have a lower ABAAS/ADA height counter area to account for an Architectural Barriers Act Accessibility Standard (ABAAS) Compliance area.
2. The service window and counter shall be installed the full width of the interface between the reception area and the USDA open office space, less that space required for a locking door with ADA required door pull clearance. The service window shall be provided with operable, lockable pass-throughs to allow for customer service interactions at both the higher height counter and the ADA/ABAAS height counter portions.
3. Lessor shall provide built-in storage below the counter on the USDA internal side of the customer service counter.
4. Lessor shall supply glazing for visual inspection of visitors in the reception area with maximum sight lines from the open office spaces either through door lights or interior windows with blinds.
5. All glazing supplied in the reception area shall be shatter-proof laminated glass with 3-5mm of impact-resistant film.
6. In limited circumstances, offices can also elect to keep the main customer entrance door secured at all times and have a buzzer or intercom installed at the secure door to communicate with visitors. In this configuration, a hardened customer service counter is not required since the office is secure.

B. **Entrance Door Chime:** An entrance door chime shall be installed on the main/customer entrance to notify employees when a visitor enters the facility to increase employee situational awareness. The chime shall be supplied with remote annunciators to be located in each USDA agency area and non-agency partner areas open office space on site to ensure that all agencies in the office receive the notification.

C. **Duress/Panic Buttons:**

1. All **USDA** Main Entrance/Reception areas shall have a duress/panic alarm installed. Additional duress/panic buttons shall be placed in all areas that employees routinely service customers. Duress buttons shall be wireless. Anticipate a minimum of **5**, but final quantity shall be confirmed with USDA Security during design based upon the efficiency and layout of the space.
2. These alarms shall be tied to the IDS system to ensure annunciation to a monitoring service (i.e., 911, local police station, or approved 3rd party monitoring service).

D. **Intrusion Detection System (IDS) Coverage and Monitoring:** The Lessor shall design, install and maintain an Intrusion Detection System (IDS) consisting of door contacts for all perimeter entry and exit doors to USDA space; magnetic contacts for operable ground floor windows, acoustic glass break detectors for glass doors, doors with glass windows, or ground level windows; passive infrared motion sensors (if needed). In the open office spaces, an alarm keypad (one needed per office suite); and an auto-dialer for alarms to annunciate to a monitoring service for after-hours monitoring.

E. **Main/Customer Entrance Emergency Lockdown:** A locking device is required on the main/customer entrance that will easily allow for locking/**unlocking** the door in emergencies. To support an emergency lockdown, a thumb turn deadbolt, or some other device shall be installed on the main entrance door so the door can be locked immediately in an emergency.

F. **Space Compartmentalization - False Ceiling:** Any suspended (false) ceilings that lead into USDA-FPAC space from a wall in a common hallway or other tenants' space must be secured in a manner that no individual can enter USDA space undetected or unmonitored by exploiting the gap above the false ceiling wall. The preferred method of securing the space is to install "slab to slab" walls that separate the USDA space from the rest of the facility. However, installing steel fencing mesh affixed to the true ceiling and the existing walls or drywalling the open area are also acceptable. Any deviations due to unique building layouts must be discussed with USDA Security during design and approved in writing by the USDA Lease Contracting Officer.

G. **Perimeter Doors and Door Locks Leading to USDA-FPAC Space:**

1. Perimeter doors to USDA space shall be either glass storefront doors, metal high-security doors, or solid-core wood doors. Hollow core doors are not permissible.
2. Door hinges shall be located on the inside of the door (non-public side), or exposed door hinge pins must be permanently secured to prevent removal. Approved methods include tack welding or locking screws to hold pin in place. Astragals shall be supplied for all double door applications.
3. Perimeter door locks must be either electronic access control, high security cipher, or high-security mechanical locks, preferably with a dead-bolt. Cipher locks are highly encouraged to avoid the need to issue keys.
4. All exposed door locking mechanisms, except for deadbolts, must be covered by a door strike plate cover to prevent the mechanism from tampering.
5. All doors without a window, shall have a peephole installed in the door.
6. All door locks shall be rekeyed prior to USDA leasing the space and all keys must be accounted for.

H. **Emergency Exit Doors:**

1. Emergency exits doors, any doors to the exterior, and USDA suite entry doors, shall include an automatic door closer and exit hardware that is compliant with applicable life safety codes and standards. All emergency exits doors shall have signage posted on the interior side of the door stating, "Emergency Exit Only".
2. Astragals shall be supplied on all double door applications and all exterior doors.
3. A 290-degree wide-angle door viewer shall be installed on all exit doors if an exterior window is not adjacent to the door or if it is not a glass door.

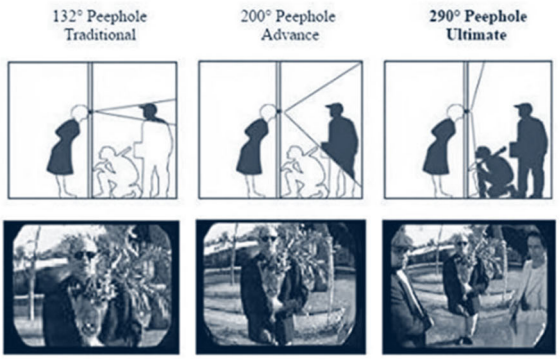

High Security New 290 Degree Peephole Wide Angle in Black Door viewer

4. Emergency Exit doors shall have no visible hardware on the exterior.

I. **Window Air-Conditioning (A/C) Unit Protection:** If window A/C units are provided as part of the USDA suite space HVAC system, they must be secured with a lockable cage or window bars in a way that prevents the window unit from being pushed in or removed.

J. **Protection of Exterior Gas Mains or Propane Tanks Adjacent to Premises:** If applicable, exposed gas mains, meters or propane tanks containing flammable or explosive gasses / liquids are located on premises near a facility façade or in a parking lot, the mains, meters, or tanks and all associated appurtenances must shall be supplied with bollards (typically yellow safety bollards) or some other barrier alternative to be approved in writing by the USDA Lease Contracting Officer (i.e., boulder crash-rated planter or boulder) around it to protect it all vulnerable parts of the system from a vehicle strike.

K. **Security of Exterior Electrical Panels and Switches:** Any exterior electrical panels located on the outside of the building or in common/public spaces shall be secured via a locking device, unless not permitted by local code. All panels that feed the USDA suite shall be located inside the USDA space or in a secured area on the interior of the building. Any deviations from this shall be approved during design in writing by the USDA Lease Contacting Officer.

L. **Public Restroom Access:** Lessor shall secure public restrooms (restrooms located in the building common area) in a manner that only facility tenants can access them and not the general public through the application of a cipher lock on either each individual restroom door or application of a cipher lock to the restroom access corridor.

M. **Fire and Carbon Monoxide Detection:** Lessor shall provide, install, and maintain appropriate amount and type of smoke and carbon monoxide detection devices in accordance with local code. Where there is no local code requirement for a carbon monoxide detector, the Lessor shall provide, install, and maintain a minimum of (1) carbon monoxide detector on the premises.

N. **Perimeter Lighting:** Ensure that the building exterior entrances/exits are illuminated to a minimum of 5 foot-candles; Sidewalks and walkways illuminated to a minimum of 3 foot-candles; and Parking lot surfaces illuminated to 1 foot-candle throughout the parking areas. Lighting must meet this standard at all times in periods of darkness. Only having motion activated lighting is not sufficient.

O. **Interior Office Doors:** Interior doors to offices, conference rooms, restrooms, and break rooms shall not be hollow core wood or any other interior residential use door. Doors shall be solid core wood or equivalent. All doors to private offices shall have door **locking** mechanism (residential use internal locks are not permitted).

P. **Landscaping:** Landscaping shall be maintained and trimmed as needed to prevent it from creating areas of concealment around the facility and parking areas. Landscaping shall not be overgrown where it impacts lighting illumination, camera views (if **applicable**), and a clear line of sight.

Q. **Janitorial and Maintenance Staff Access**. Any lessor provided maintenance/janitorial staff must undergo a Special Agreement Check (SAC) background investigation before being granted unescorted access. This check will be conducted by USDA-FPAC HSD. USDA-FPAC reserves the right to request daytime cleaning in USDA space. Due to the highly field-based nature of USDA's work at certain locations, background checks may be required even for janitorial staff who will be performing duties during daylight to ensure no disruptions to janitorial service where USDA staff may not be present for the day. SAC background checks shall be sent to the USDA local lease contact, which will then be requested by the State Office through ServiceNow, routing the ticket to Homeland Security Division.

SECTION 6 CEC SPACE (OCIO) AND ADP GUIDELINES

6.01 ADP ROOM GUIDELINES (TENANT IMPROVEMENT COSTS) – Tenant improvement costs

The Lessor shall provide, install, and maintain all tenant improvements of the ADP (IT Server) Room as required in the ADP and Wiring Guidelines EXHIBIT. This EXHIBIT covers the ADP (IT Server) Room. Demarcation Point, wiring, distribution cabling, wireless access points, fiber, LAN/WAN Voice Cabinet, and physical and security requirements.

The below information is supplemental and explanatory, to be used in addition to the ADP and Wiring Guidelines exhibit.

A. **Telecommunications Service Entrance**. The telecommunications service entrance shall be supplied with a pull string between the pole and the demarcation point to enable USDA's utility provider to pull in their new telecommunications service.

B. **Electrical Power**. New and refurbished ADP rooms shall have the ability to shut off power to a malfunctioning information system component.

C. **Plumbing**. Because of the danger of water damage, wet piping shall NOT be routed over the top of the ADP room, unless directly associated with the functions of that room (i.e. - sprinkler piping, condensate drainage, and humidifier feed piping). All room-related wet piping shall be routed to avoid running over the rack and equipment locations. Condensate piping shall be supplied with a fail-safe containment system, such as a drain pan with overflow and auto shutoff, or as required by code, whichever is more stringent.

D. **Flooring**. The flooring shall be ESD/anti-static hard surface as light in color as possible.

E. **Shared Space**. ADP rooms shall only contain OCIO equipment and other OCIO designated uses. No other uses shall be allowed within the ADP room, unless expressly permitted in writing by the USDA Lease Contracting Officer (i.e., storage, security system head end, etc.,)

F. **Patch Panel**. A modular, pass-through type patch panel is acceptable with written approval from the USDA Lease Contracting Officer.

G. **Wiring and Cabling Requirements**.

- Wiring shall enter the ADP room in an overhead configuration, taller than the server rack, to ensure overhead equipment rack connections with a minimum of stress and strain put on the wiring, and to avoid tripping hazards or other blockages of the server rack clearance space.
- Supplemental to the ADP and wiring guidelines v. 3 page 7, the lessor shall provide, install, and maintain the LAN/WAN/voice cabinet, wiring, cabling, and patch panels in the cabinet.

6.02 ADP/ IT SERVER ROOM

A secure, enclosed space to store the servers on site. The location shall be adjacent to building core, away from public areas, mailrooms and loading docks. Locate away from areas where water bearing pipes would be overhead. Configuration of the room shall allow a three-feet clearance around equipment.

A. All walls surrounding the ADP room shall be full height walls, floor to deck. Where existing walls are being utilized for portions of the ADP room enclosure, those walls shall be topped off to comply with the full-height wall requirement.

B. Keying / Door Hardware requirements: provide storeroom function cipher lock with individual keyed lock override for emergency situations. This is the only keyed lock in the USDA suite that shall not be placed on the USDA suite master lock. Door shall be self-closing.

DESIGN EXAMPLES – ADP/IT SERVER ROOM

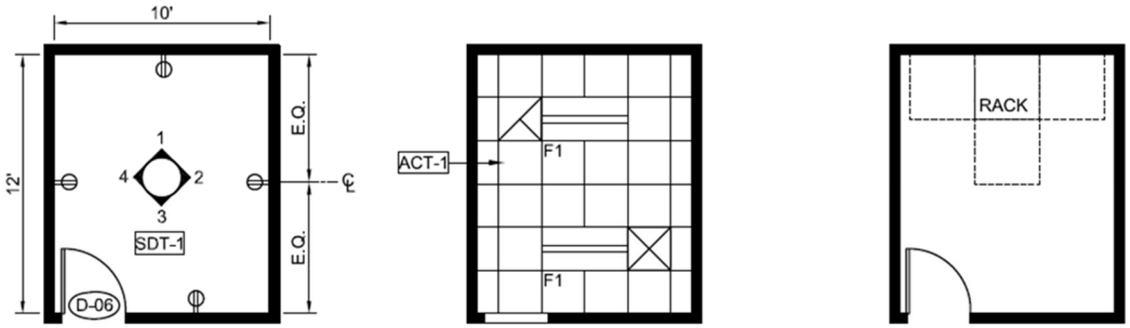

Floor & Power Plan | Reflected Ceiling Plan | Furniture Plan