VICINTY MAP

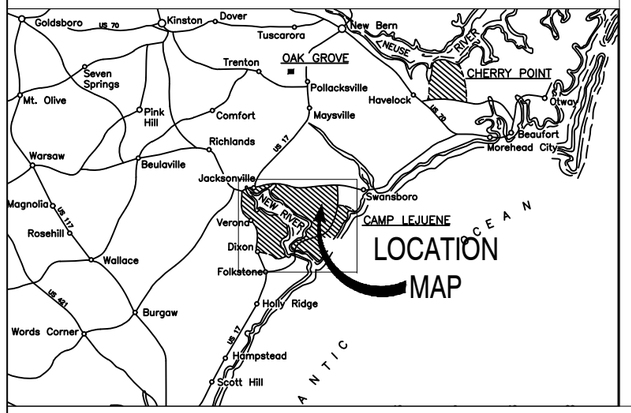

ROOF REPAIRS - HP445, HP465, HP485

MARINE CORPS BASE, CAMP LEJEUNE, N.C.

DRAWING INDEX	
T-1	TITLE SHEET AND AREA MAPS
T-2	NOTES AND SPECIFICATIONS
DTL1	HP445 DETAILS
DTL2	HP465 DETAILS
DTL3	HP485 DETAILS
DTL4	ROOF DETAILS
DTL5	ROOF DETAILS
DTL6	ROOF DETAILS
DTL7	ROOF DETAILS

AREA MAP

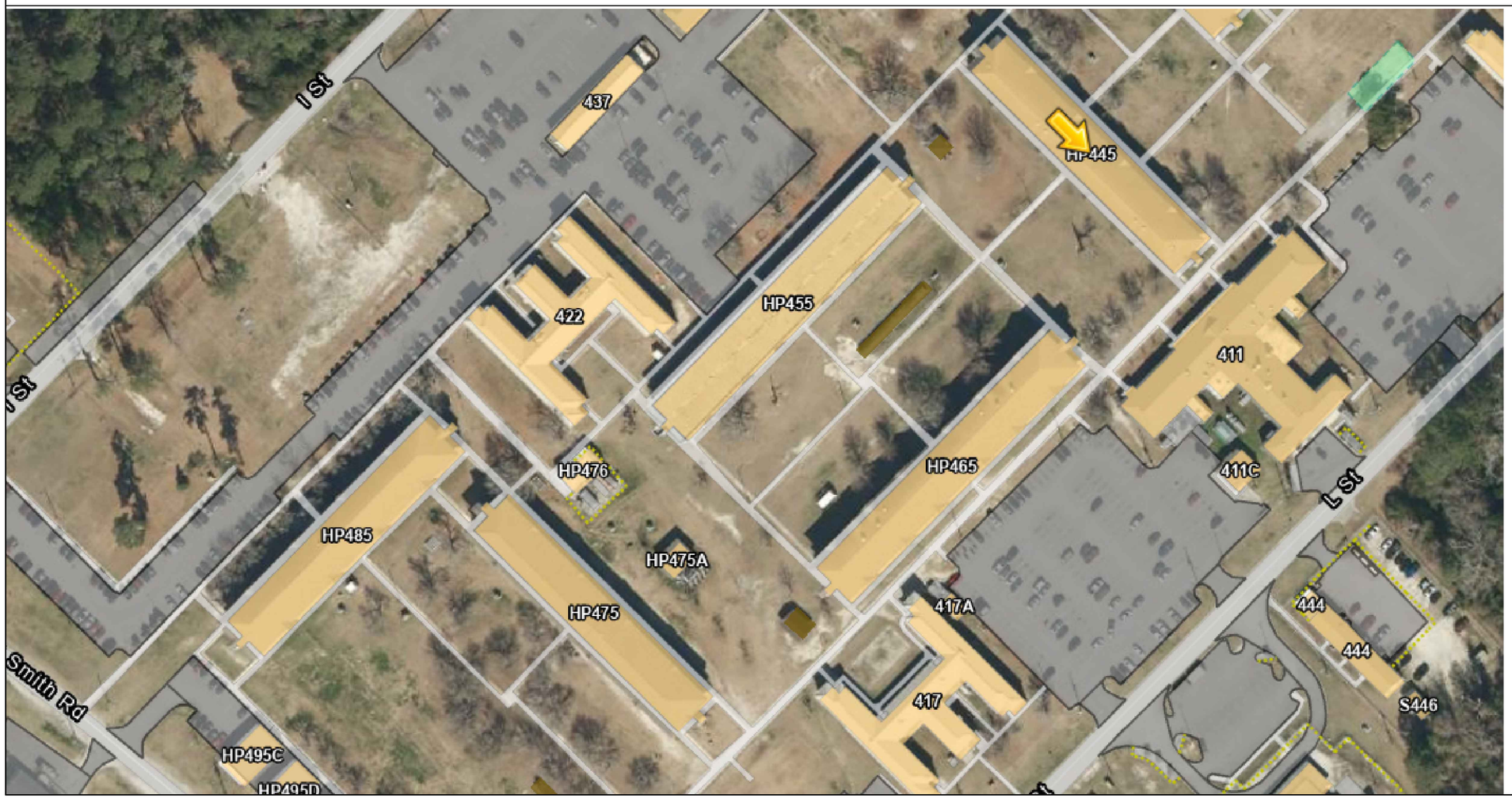

DISCLOSURE OF INFORMATION CONTRACTOR SHALL COMPLY AS FOLLOWS:

A. THE CONTRACTOR SHALL NOT RELEASE TO ANYONE OUTSIDE THE CONTRACTOR'S ORGANIZATION ANY UNCLASSIFIED INFORMATION, REGARDLESS OF MEDIUM (E.G., FILM, TAPE, DOCUMENT), PERTAINING TO ANY PART OF THIS CONTRACT OR ANY PROGRAM RELATED TO THIS CON- TRACT OR ANY PROGRAM RELATED TO THIS CONTRACT, UNLESS:
(1) THE CONTRACTING OFFICER HAS GIVEN PRIOR WRITTEN APPROVAL; OR
(2) THE INFORMATION IS OTHERWISE IN THE PUBLIC DOMAIN BEFORE THE DATE OF RELEASE.

B. REQUESTS FOR APPROVAL SHALL IDENTIFY THE SPECIFIC INFORMATION TO BE RELEASED, THE MEDIUM TO BE USED, AND THE PURPOSE FOR THE RELEASE. THE CONTRACTOR SHALL SUBMIT ITS REQUEST TO THE CONTRACTING OFFICER AT LEAST 45 DAYS BEFORE THE PROPOSED DATE FOR RELEASE.

C. THE CONTRACTOR AGREES TO INCLUDE A SIMILAR REQUIREMENT IN EACH SUBCONTRACT UNDER THIS CONTRACT. SUBCONTRACTORS SHALL SUBMIT REQUESTS FOR AUTHORIZATION TO RELEASE THROUGH THE PRIME CONTRACTOR TO THE CONTRACTING OFFICER.

BLDG #: MULTIPLE | SHEET 1OF 10
PROJECT NUMBER: 20M061CN
MACC NUMBER:

CHELSEA KREILEY

ROOF REPAIRS - HP445, HP465, HP485

USMC CAMP LEJEUNE

T-1

TITLE SHEET AND AREA MAPS

GENERAL NOTES/ENVIRONMENTAL NOTES:

1. TO ACCESS SITE CONTACT MCBL CONSTRUCTION MANAGER.
2. THESE DRAWINGS INDICATES GENERAL CONDITIONS WITH INFORMATION COMPILED FROM FIELD OBSERVATION. CONTRACTOR SHALL BE RESPONSIBLE FOR ACTUAL FIELD VERIFICATION PRIOR TO BIDDING, ORDERING MATERIALS AND DURING EVERY STEP OF CONSTRUCTION FOR EXISTING SURFACES, DIMENSIONS AND CONDITIONS. NUMBER OF ITEMS AND LOCATIONS SHOWN ARE APPROXIMATE, CONTRACTOR MUST VERIFY ALL CONDITIONS AND INCLUDE IN SCOPE OF WORK ACCORDINGLY.
3. CONSTRUCTION MATERIALS INDICATED ARE GENERAL IN NATURE AND ARE NOT INTENDED TO FULLY DESCRIBE THE EXISTING CONSTRUCTION PRESENT.
4. REPAIR AND REFINISH AREAS DAMAGED OR DISTURBED BY NEW WORK TO BE PROVIDED UNDER THIS CONTRACT.
5. DIMENSIONS PROVIDED ON EXISTING ITEMS ARE PROVIDED TO AID THE CONTRACTOR TO UNDERSTAND THE SCOPE OF WORK. FIELD VERIFY ALL CONDITIONS.
6. CLEAN ALL ITEMS AS NECESSARY TO RECEIVE NEW FINISHES. FILL ALL HOLES TO MATCH EXISTING CONDITIONS.
7. CONTRACTOR SHALL INSURE THAT THE BUILDING REMAINS WATERTIGHT THROUGH OUT THE CONSTRUCTION OPERATIONS AND AT THE END OF EACH DAY.
8. SUBMITTALS SHALL BE SUBMITTED TO THE CONTRACTING OFFICER CONTRACTING REPRESENTATIVE FOR APPROVAL.
9. REMOVE ALL DAMAGED OR LOOSE BUILDING COMPONENTS, PATCH TO MATCH EXISTING, PREPARE TO RECEIVE NEW FINISHES.
10. METHOD OF REMOVAL OF ANY BUILDING COMPONENT SHALL BE APPROVED BY THE CO CONTRACTING REPRESENTATIVE. THE CONTRACTOR SHALL BE RESPONSIBLE FOR ENSURING THAT REMOVAL OF EXISTING COMPONENTS DOES NOT AFFECT ADJACENT OCCUPIED AREAS.
11. THIS AREA OF WORK IS LOCATED WITHIN RESTRICTED AREAS. ACCESS TO THIS AREA SHALL BE COORDINATED WITH THE CONTRACTING OFFICER.
12. THE NOTATION (TYP) INDICATES THAT THE CONDITION OCCURS IN MORE THAN ONE PLACE INCLUDING ALL SIMILAR CONDITIONS NOT INDIVIDUALLY NOTED.
13. COORDINATE STAGING AREA, SITE ACCESS, AND TOILET USE WITH THE CO CONTRACTING REPRESENTATIVE.
14. CONTRACTOR SHALL BE RESPONSIBLE FOR SITE SECURITY AND JOB SAFETY.
15. CONSTRUCTION ACTIVITIES SHALL BE IN ACCORDANCE WITH OSHA STANDARDS AND GOVERNMENT REQUIREMENTS.
16. AREAS OUTSIDE THE LIMITS OF PROPOSED WORK DISTURBED BY THE CONTRACTOR'S OPERATIONS SHALL BE RESTORED BY THE CONTRACTOR TO THEIR ORIGINAL CONDITION AT THE CONTRACTOR'S EXPENSE AS SOON AS PRACTICABLE.
17. CONTRACTOR SHALL PREVENT DUST, SEDIMENT AND DEBRIS FROM EXITING THE CONSTRUCTION SITE AND SHALL BE RESPONSIBLE FOR CLEANUP, REPAIRS AND CORRECTIVE ACTION IF SUCH OCCURS. CONTRACTOR SHALL DISPOSE OF DEBRIS IN ACCORDANCE WITH APPLICABLE FEDERAL, STATE, AND LOCAL REGULATIONS, ORDINANCE AND STATUTES.
18. BURNING WILL NOT BE ALLOWED ON THE PROJECT SITE UNLESS AUTHORIZED IN WRITING BY THE CONTRACTING OFFICER.
19. CONTRACTOR IS RESPONSIBLE FOR PLACING BARRICADES USING FLAG MEN, FENCE, ETC AS NECESSARY TO INSURE SAFETY TO PUBLIC AND BUILDING OCCUPANTS.
20. CONTRACTOR'S PERSONNEL MUST WEAR IDENTIFICATION AT ALL TIMES.
21. ALL UTILITIES AND EXISTING FEATURES ARE TO BE FIELD VERIFIED PRIOR TO CONSTRUCTION. CONTRACTOR SHALL BE RESPONSIBLE FOR ANY DAMAGE TO EXISTING UTILITIES.
22. IF CONTAMINANTS ARE SUSPECTED THROUGH ODORS OR VISUAL ACTIVITIES, IMMEDIATELY STOP WORK. CALL 911 AND CONTACT EMD AT (910) 451-9017 FOR INSTRUCTIONS.
23. CONTRACTOR SHALL REVIEW ASBESTOS INSPECTION SURVEY BEFORE COMMENCING WORK.

GENERAL NOTES - ROOFING:

1. REFERENCE MANUFACTURER'S TECHNICAL SPECIFICATIONS FOR INSTALLATION INSTRUCTIONS.
2. UNLESS OTHERWISE NOTED, ALL ROOF PENETRATIONS AND PLUMBING VENTS CURRENTLY LOCATED ON THE ROOF ARE TO REMAIN IN PLACE SUBSEQUENT TO NEW ROOF INSTALLATION. REMOVE AND REPLACE ALL EXISTING FLASHING ELEMENTS AT ALL PENETRATIONS PRIOR TO NEW ROOFING SYSTEM INSTALLATION.
3. THE CONTRACTOR SHALL COORDINATE ALL UTILITY CONNECTIONS (PLUMBING, ELECTRICAL, HVAC, ETC.) WITH DEMOLITION AND RENOVATION PHASING. COORDINATE ALL SHUTDOWNS AND/OR MODIFICATIONS OF EXISTING SYSTEMS WITH THE CONSTRUCTION MANAGER.
4. THE CONTRACTOR SHALL DE-ENERGIZE ALL ELECTRIC CIRCUITS PRIOR TO DEMOLITION OF AFFECTED EQUIPMENT, RE-CONNECT, AND RE-ENERGIZE ALL AFFECTED EQUIPMENT AND ELECTRICAL DEVICES AS NECESSARY TO RETURN THEM TO WORKING CONDITIONS.
5. FOR BIDDING PURPOSES, THE ROOFING CONTRACTOR SHALL INCLUDE IN THEIR BID THE REPLACEMENT OF A MINIMUM OF 5% OF THE EXISTING PLYWOOD WOOD DECK SUBSTRATE. THE NEW SUBSTRATE MUST MATCH EXISTING CONDITIONS (WOOD TYPE, WIDTH AND THICKNESS) AND MAINTAIN A SMOOTH AND EVEN TRANSITION.
6. PROPERLY REMOVE, HAUL AND DISPOSE OF ALL DEBRIS. THE CONTRACTOR SHALL NOT UTILIZE THE DUMPSTER PROVIDED BY CAMP LEJEUNE FOR THE OCCUPANTS OF THE BUILDINGS.
7. THE CONTRACTORS MAY ONLY USE THE CAMP LEJEUNE LANDFILL FOR THE DISPOSAL OF ASBESTOS CONTAINING MATERIALS AND BUILDING PRODUCTS WITH TIGHTLY ADHERED LEAD CONTAINING PAINT. THE HOURS OF OPERATION ARE 0730-1530. DELIVERY OF ACCEPTABLE MATERIALS (LEAD AND ASBESTOS) SHALL BE BY APPOINTMENT ONLY. APPOINTMENTS MADE BY PHONE AT 910-451-5011 OR 910-451-2946.
8. NON-CONTAMINATED MATERIALS: ALL OTHER CONTRACTOR GENERATED MATERIAL SHALL BE WEIGHED THROUGH THE BASE LANDFILL SCALES BEFORE BEING REMOVED FROM THE BASE. CONTRACTORS UTILIZING THE BASE SCALES WILL REQUIRE CONTRACTING OFFICER ASSISTED PRE-REGISTRATION WITH THE LANDFILL MANAGER. THE CONTRACTING OFFICER WILL REGISTER THE CONTRACT VIA E-MAIL, WITH THE BASE LANDFILL. ALL HAUL VEHICLES WILL MAINTAIN A SECURE VEHICLE PLACARD AS A CONDITION TO UTILIZE THE SCALE. E-MAIL THE CONTRACT INFORMATION TO THE LANDFILL CLERK, INCLUDING THE NAME ON THE PRIME CONTRACTOR, CONTRACT NUMBER, JOB NAME/DESCRIPTION, COMPLETION DATE AND WHETHER OR NOT ANY OF THE ABOVE MATERIALS WILL BE DELIVERED TO THE LANDFILL. HAULING AND OFF-BASE LANDFILL COSTS SHALL BE INCLUDED IN THE CONTRACT.

MISCELLANEOUS INFORMATION:

1. FACILITY ACCESS AND SCHEDULING TO THE WORK AREA SHALL BE ARRANGED THRU THE CONTRACTING OFFICER'S REPRESENTATIVE FOR THE RDICC'S OFFICE. THE CONTRACTOR SHALL NOT CONTACT THE FACILITY REPRESENTATIVE DIRECTLY UNDER ANY CIRCUMSTANCES. ALL COORDINATION SHALL BE DONE WITH THE CONSTRUCTION MANAGER ONLY.
2. THIS FACILITY IS OPERATIONAL ALL YEAR ROUND DURING ALL HOURS. CONTRACTOR SHALL NOT DISRUPT THE BUILDING FUNCTIONS UNLESS COORDINATED WITH AND AGREED WITH THE FACILITY MANAGER.
3. IF THE CONTRACTOR IS UNABLE TO COMPLETE CERTAIN CONSTRUCTION ASPECTS WITHOUT AFFECTING THE BUILDING OPERATION, THE CONTRACTOR SHALL REQUEST PERMISSION TO SCHEDULE ANY SHUTDOWN TEN (10) WORKING DAYS PRIOR TO THE COMMENCEMENT OF ANY CONSTRUCTION ACTIVITY. COORDINATE WITH THE CONSTRUCTION MANAGER.
4. ANY ITEM SCHEDULED TO BE REMOVED, PROTECTED AND RE-INSTALLED, CONTRACTOR SHALL NOTIFY C.O. IMMEDIATELY IF DAMAGED.

HAZARDOUS MATERIALS:

1. CAMP LEJEUNE ASBESTOS PROGRAM MANAGER IS FRAZIER TRUSTY, 910-451-7018.
2. THE CONTRACTOR MUST SURVEY THE EXISTING CONDITIONS AFFECTED BY THIS PROJECT. IF ASBESTOS MATERIALS ARE FOUND THE CONTRACTOR MUST ABATE ALL SUCH MATERIALS.
3. FASCIA CONTAINS LEAD BASED PAINT.

SUBMITTALS:

1. MATERIAL SELECTION AND COLORS FOR STANDING SEAM METAL ROOF SYSTEM, UNDERLAYMENT, EDGE METAL, FASCIA, GUTTERS/DOWNSPOUTS, AND LOUVERS IS REQUIRED PRIOR TO THE START OF CONSTRUCTION.
2. REMEDIATION PLAN FOR LEAD BASED PAINT AND ASBESTOS IS REQUIRED PRIOR TO THE START OF CONSTRUCTION.

UFC CRITERIA:

INCLUDING BUT NOT LIMITED TO THE FOLLOWING:

1. UFC 1-200-01 DOD, GENERAL BUILDING REQUIREMENTS.
2. UFC 4-010-01 DOD, MINIMUM ANTITERRORISM STANDARDS FOR BUILDINGS.
3. INTERNATIONAL BUILDING CODE (IBC).
4. LIFE SAFETY CODE, NATIONAL FIRE PROTECTION ASSOCIATION (NFPA 101)
5. ARCHITECTURAL BARRIERS ACT (ABA).
6. AMERICANS WITH DISABILITIES ACT (ADA).
7. ICC/ANSI A117.1.
8. ALL APPLICABLE DESIGN CRITERIA (DOD).
9. NFPA 10 PORTABLE FIRE EXTINGUISHERS.
10. NFPA 72 FIRE ALARM AND SIGNALING CODE.
11. NFPA FIRE DOORS AND OTHER OPENINGS PROTECTIVES.

DISCLOSURE OF INFORMATION CONTRACTOR SHALL COMPLY AS FOLLOWS:

A. THE CONTRACTOR SHALL NOT RELEASE TO ANYONE OUTSIDE THE CONTRACTOR'S ORGANIZATION ANY UNCLASSIFIED INFORMATION, REGARDLESS OF MEDIUM (E.G., FILM, TAPE, DOCUMENT), PERTAINING TO ANY PART OF THIS CONTRACT OR ANY PROGRAM RELATED TO THIS CON- TRACT OR ANY PROGRAM RELATED TO THIS CONTRACT, UNLESS:
(1) THE CONTRACTING OFFICER HAS GIVEN PRIOR WRITTEN APPROVAL; OR
(2) THE INFORMATION IS OTHERWISE IN THE PUBLIC DOMAIN BEFORE THE DATE OF RELEASE.

B. REQUESTS FOR APPROVAL SHALL IDENTIFY THE SPECIFIC INFORMATION TO BE RELEASED, THE MEDIUM TO BE USED, AND THE PURPOSE FOR THE RELEASE. THE CONTRACTOR SHALL SUBMIT ITS REQUEST TO THE CONTRACTING OFFICER AT LEAST 45 DAYS BEFORE THE PROPOSED DATE FOR RELEASE.

C. THE CONTRACTOR AGREES TO INCLUDE A SIMILAR REQUIREMENT IN EACH SUBCONTRACT UNDER THIS CONTRACT. SUBCONTRACTORS SHALL SUBMIT REQUESTS FOR AUTHORIZATION TO RELEASE THROUGH THE PRIME CONTRACTOR TO THE CONTRACTING OFFICER.

ROOF REPAIRS –
HP445, HP465, HP485

USMC CAMP LEJEUNE

T-2

NOTES AND SPECIFICATIONS

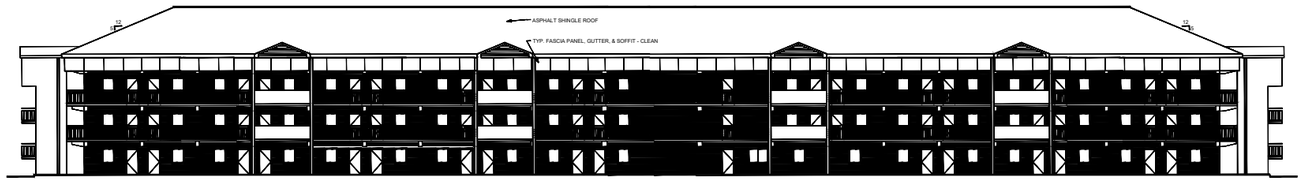

BLDG. HP445 - WEST ELEVATION - EXISTING CONDITIONS
NTS

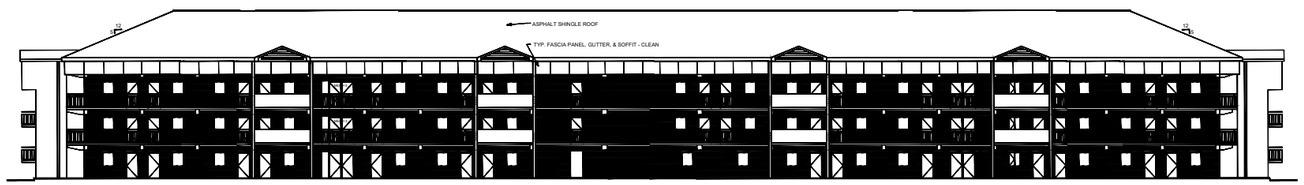

BLDG. HP445 - EAST ELEVATION - EXISTING CONDITIONS
NTS

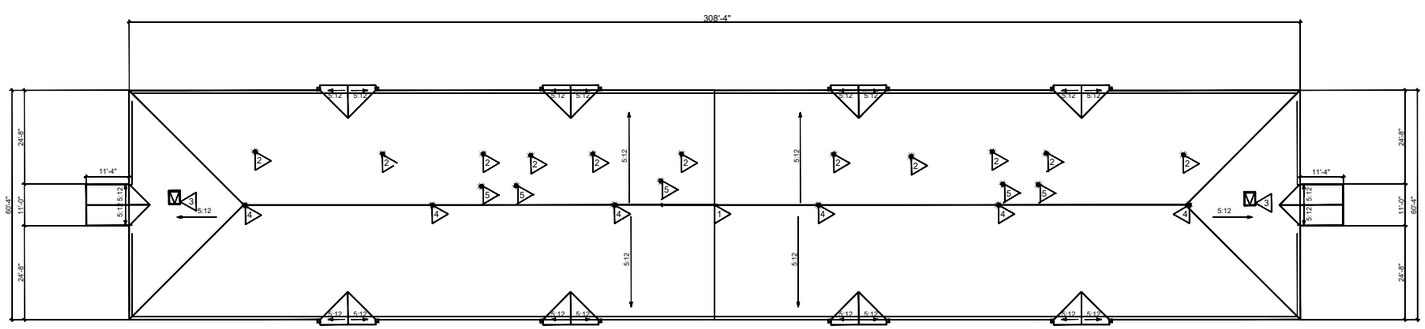

BLDG. HP445 - ROOF PLAN - EXISTING CONDITIONS
NTS

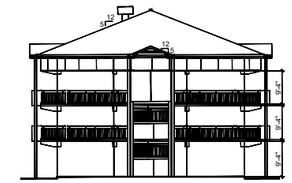

BLDG. HP445 - NORTH/SOUTH ELEVATION - EXISTING CONDITIONS
NTS

EXISTING CONDITIONS:

1. EXPANSION JOINT
2. PLUMBING VENT
3. ROOF HATCH
4. FALL PROTECTION
5. EXHAUST FAN

GENERAL REQUIREMENTS:

APPLY TO THIS SHEET ONLY

1. REMOVE AND DISPOSE OF EXISTING FALL PROTECTION.
2. REMOVE EXISTING LIGHTNING PROTECTION IF APPLICABLE.
3. REMOVE AND DISPOSE OF EXISTING ROOF SYSTEM (INCLUDING SHINGLES, EDGE METAL, AND UNDERLAYMENT) DOWN TO THE DECK.
4. REMOVE ROTTED OR DAMAGED DECKING AND REPLACE WITH LIKE MATERIAL UP TO 5% OF AREA OF ROOF.
5. INSTALL NEW ALUMINUM DRIP EDGE, COLOR TO BE BONE WHITE.
6. INSTALL A NEW SELF-ADHERING ICE AND WATER MEMBRANE OVER THE ENTIRE ROOF SURFACE AS THE UNDERLAYMENT FOR THE STANDING SEAM METAL ROOF.
7. INSTALL A NEW ELASTOMERIC EXPANSION JOINT RECOMMENDED BY THE STANDING SEAM METAL ROOF MANUFACTURER AT EXISTING LOCATIONS.
8. INSTALL NEW ALUMINUM STANDING SEAM METAL ROOF WITH A VENTED RIDGE CAP, COLOR TO BE SUEDE.
9. INSTALL PANEL CLIPS AS PER THE MANUFACTURERS RECOMMENDATION FOR A 150 MPH WIND IN ACCORDANCE WITH THE UNIFORM BUILDING CODE FOR NORTH CAROLINA.
10. INSTALL PIPE BOOTS RECOMMENDED BY THE STANDING SEAM METAL ROOF MANUFACTURER ON EXISTING VENT PIPES.
11. INSTALL PERMANENT FALL PROTECTION.
12. ALL MEASUREMENTS SHALL BE FIELD VERIFIED BY CONTRACTOR BEFORE BID

BLDG #: MULTIPLE | SHEET 3OF 9
PROJECT NUMBER: 20M061CN
MACC NUMBER:

CHELSEA KREILEY

ROOF REPAIRS –
HP445, HP465, HP485

USMC CAMP LEJEUNE

DTL1

HP445 DETAILS

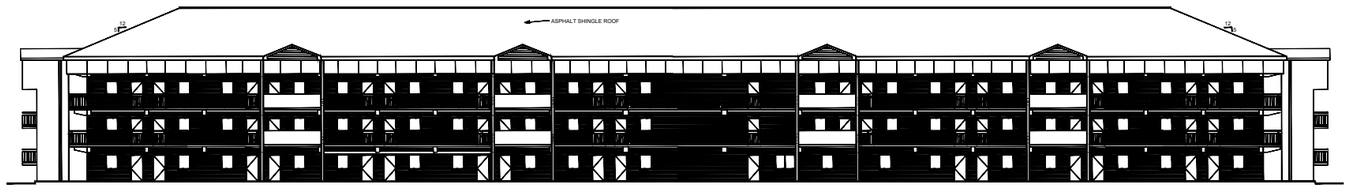

BLDG. HP465 - NORTH ELEVATION - EXISTING CONDITIONS
NTS

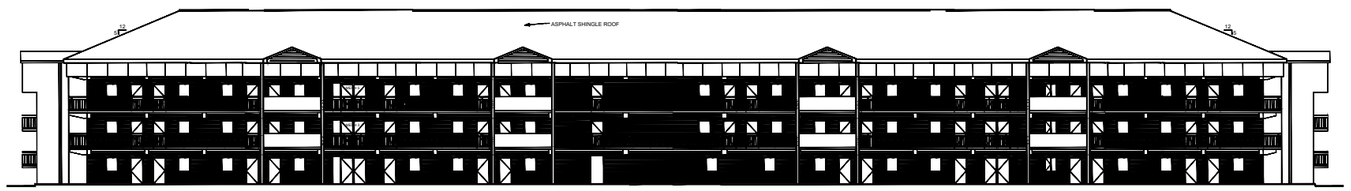

BLDG. HP465 - SOUTH ELEVATION - EXISTING CONDITIONS
NTS

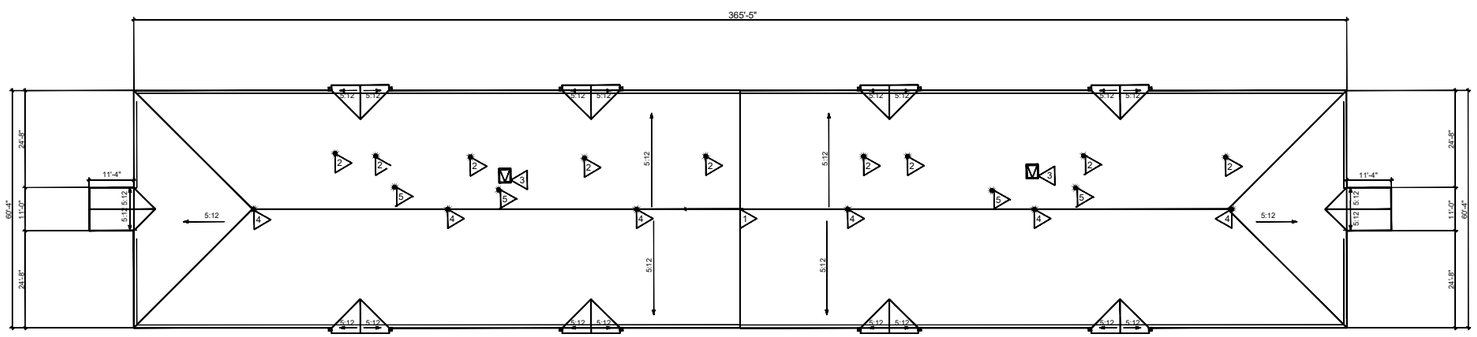

BLDG. HP465 - ROOF PLAN - EXISTING CONDITIONS
NTS

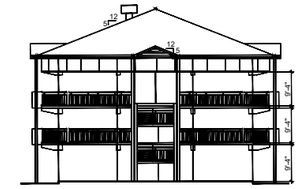

BLDG. HP465 - EAST/WEST ELEVATION - EXISTING CONDITIONS
NTS

EXISTING CONDITIONS:

1. EXPANSION JOINT
2. PLUMBING VENT
3. ROOF HATCH
4. FALL PROTECTION
5. EXHAUST FAN

GENERAL REQUIREMENTS:

APPLY TO THIS SHEET ONLY

1. REMOVE AND DISPOSE OF EXISTING FALL PROTECTION.
2. REMOVE EXISTING LIGHTNING PROTECTION IF APPLICABLE.
3. REMOVE AND DISPOSE OF EXISTING ROOF SYSTEM (INCLUDING SHINGLES, EDGE METAL, AND UNDERLAYMENT) DOWN TO THE DECK.
4. REMOVE ROTTED OR DAMAGED DECKING AND REPLACE WITH LIKE MATERIAL UP TO 5% OF AREA OF ROOF.
5. INSTALL NEW ALUMINUM DRIP EDGE, COLOR TO BE BONE WHITE.
6. INSTALL A NEW SELF-ADHERING ICE AND WATER MEMBRANE OVER THE ENTIRE ROOF SURFACE AS THE UNDERLAYMENT FOR THE STANDING SEAM METAL ROOF.
7. INSTALL A NEW ELASTOMERIC EXPANSION JOINT RECOMMENDED BY THE STANDING SEAM METAL ROOF MANUFACTURER AT EXISTING LOCATIONS.
8. INSTALL NEW ALUMINUM STANDING SEAM METAL ROOF WITH A VENTED RIDGE CAP, COLOR TO BE SUEDE.
9. INSTALL PANEL CLIPS AS PER THE MANUFACTURERS RECOMMENDATION FOR A 150 MPH WIND IN ACCORDANCE WITH THE UNIFORM BUILDING CODE FOR NORTH CAROLINA.
10. INSTALL PIPE BOOTS RECOMMENDED BY THE STANDING SEAM METAL ROOF MANUFACTURER ON EXISTING VENT PIPES.
11. INSTALL PERMANENT FALL PROTECTION.
12. ALL MEASUREMENTS SHALL BE FIELD VERIFIED BY CONTRACTOR BEFORE BID

BLDG #: MULTIPLE | SHEET 4OF 9
PROJECT NUMBER: 20M061CN
MACC NUMBER:

CHELSEA KREILEY

ROOF REPAIRS –
HP445, HP465, HP485

USMC CAMP LEJEUNE

DTL2

HP465 DETAILS

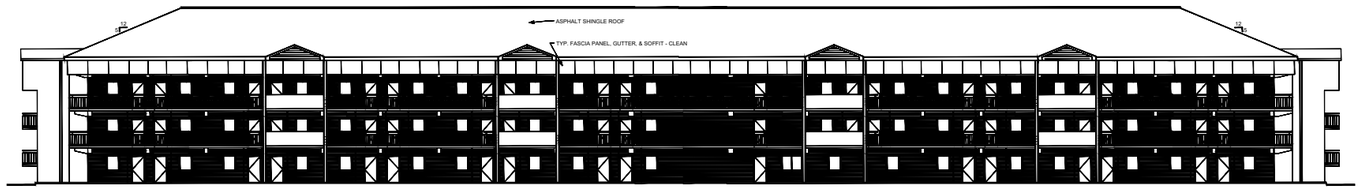

BLDG. HP485 - NORTH ELEVATION - EXISTING CONDITIONS
NTS

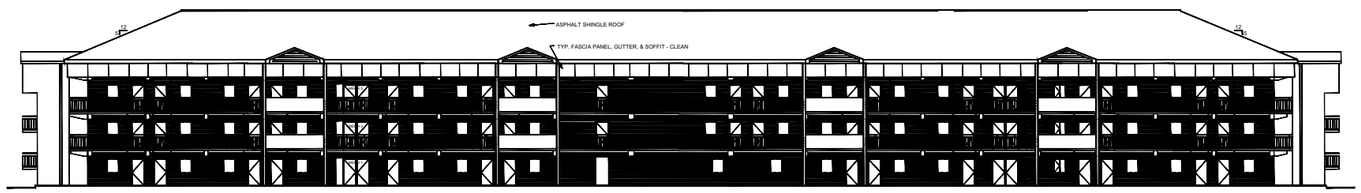

BLDG. HP485 - SOUTH ELEVATION - EXISTING CONDITIONS
NTS

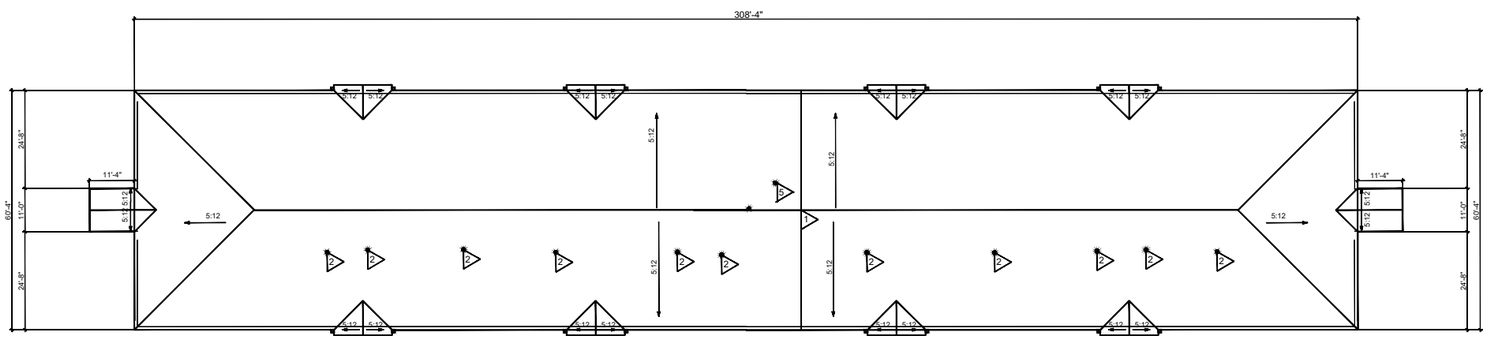

BLDG. HP485 - ROOF PLAN - EXISTING CONDITIONS
NTS

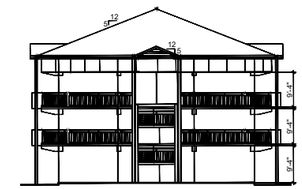

BLDG. HP485 - EAST/WEST ELEVATION - EXISTING CONDITIONS
NTS

EXISTING CONDITIONS:

1. EXPANSION JOINT
2. PLUMBING VENT
3. ROOF HATCH
4. FALL PROTECTION
5. EXHAUST FAN

GENERAL REQUIREMENTS:

APPLY TO THIS SHEET ONLY

1. REMOVE AND DISPOSE OF EXISTING FALL PROTECTION.
2. REMOVE EXISTING LIGHTNING PROTECTION IF APPLICABLE.
3. REMOVE AND DISPOSE OF EXISTING ROOF SYSTEM (INCLUDING SHINGLES, EDGE METAL, AND UNDERLAYMENT) DOWN TO THE DECK.
4. REMOVE ROTTED OR DAMAGED DECKING AND REPLACE WITH LIKE MATERIAL UP TO 5% OF AREA OF ROOF.
5. INSTALL NEW ALUMINUM DRIP EDGE, COLOR TO BE BONE WHITE.
6. INSTALL A NEW SELF-ADHERING ICE AND WATER MEMBRANE OVER THE ENTIRE ROOF SURFACE AS THE UNDERLAYMENT FOR THE STANDING SEAM METAL ROOF.
7. INSTALL A NEW ELASTOMERIC EXPANSION JOINT RECOMMENDED BY THE STANDING SEAM METAL ROOF MANUFACTURER AT EXISTING LOCATIONS.
8. INSTALL NEW ALUMINUM STANDING SEAM METAL ROOF WITH A VENTED RIDGE CAP, COLOR TO BE SUEDE.
9. INSTALL PANEL CLIPS AS PER THE MANUFACTURERS RECOMMENDATION FOR A 150 MPH WIND IN ACCORDANCE WITH THE UNIFORM BUILDING CODE FOR NORTH CAROLINA.
10. INSTALL PIPE BOOTS RECOMMENDED BY THE STANDING SEAM METAL ROOF MANUFACTURER ON EXISTING VENT PIPES.
11. INSTALL PERMANENT FALL PROTECTION.
12. ALL MEASUREMENTS SHALL BE FIELD VERIFIED BY CONTRACTOR BEFORE BID

BLDG #: MULTIPLE | SHEET 5OF 9
PROJECT NUMBER: 20M061CN
MACC NUMBER:
CHELSEA KREILEY
ROOF REPAIRS – HP445, HP465, HP485
USMC CAMP LEJEUNE
DTL3
HP485 DETAILS

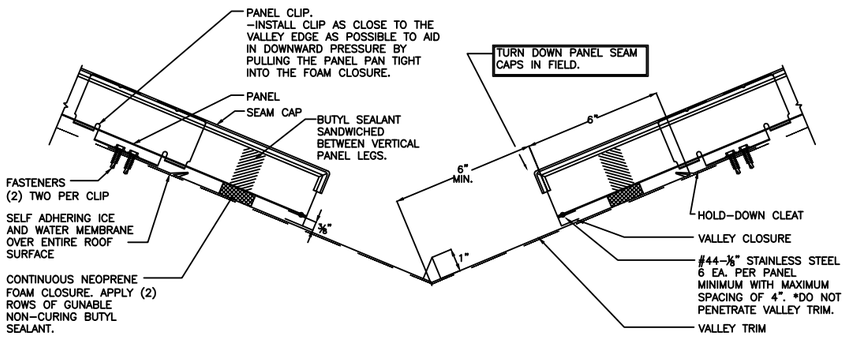

VALLEY DETAIL
NTS

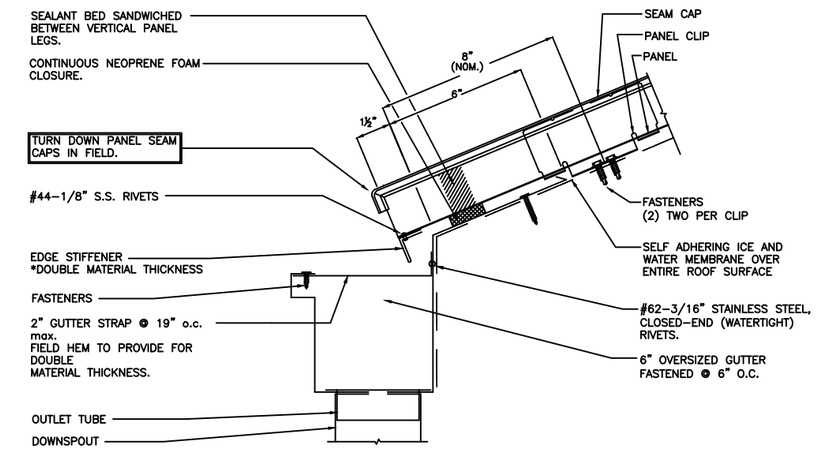

EAVE W/ GUTTER DETAIL
NTS

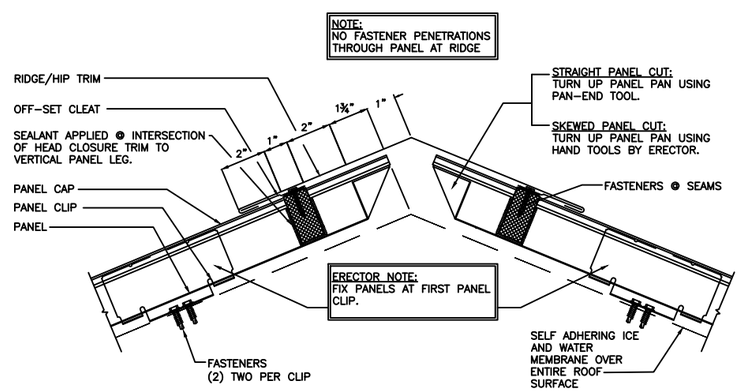

FIXED RIDGE/HIP DETAIL
NTS

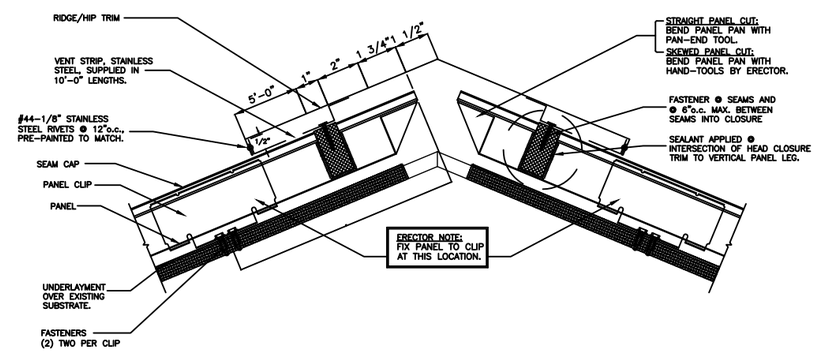

FIXED VENTED RIDGE/HIP DETAIL
NTS

BLDG #: MULTIPLE | SHEET 6OF 9
PROJECT NUMBER: 20M061CN
MACC NUMBER:

CHELSEA KREILEY

ROOF REPAIRS – HP445, HP465, HP485

USMC CAMP LEJEUNE

DTL4

ROOF DETAILS

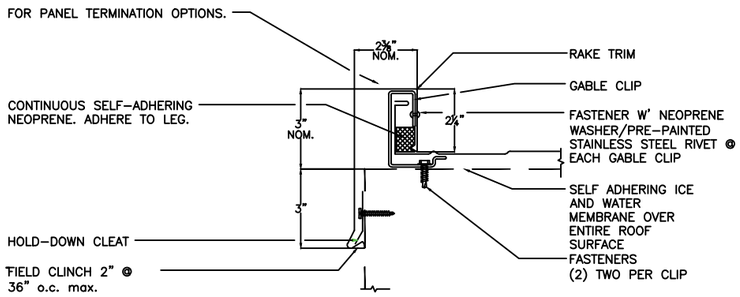

RAKE DETAIL
NTS

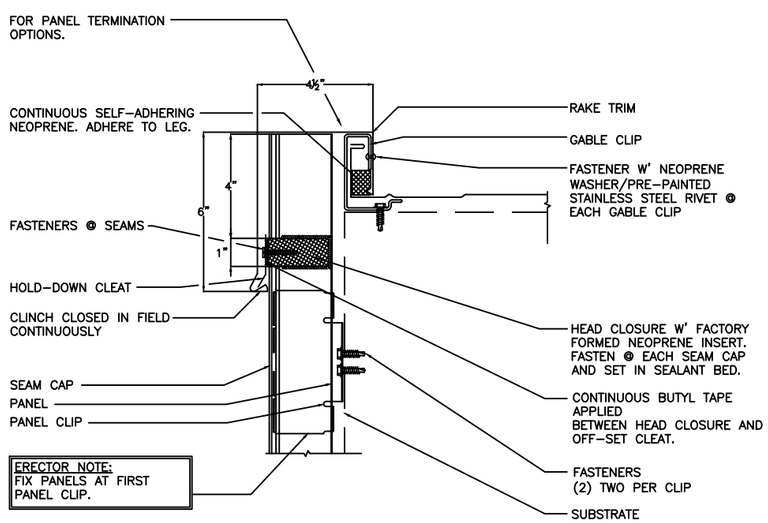

RAKE W/ VERTICAL PANEL DETAIL
NTS

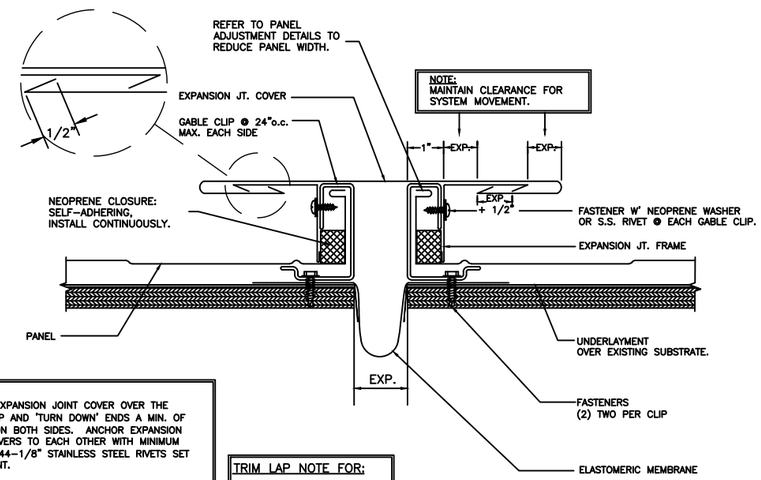

NOTE:
EXTEND EXPANSION JOINT COVER OVER THE RIDGE CAP AND 'TURN DOWN' ENDS A MIN. OF 1 1/2" ON BOTH SIDES. ANCHOR EXPANSION JOINT COVERS TO EACH OTHER WITH MINIMUM OF (4) #44-1/8" STAINLESS STEEL RIVETS SET IN SEALANT.

IMPORTANT NOTE:
EXPANSION JOINT COVERS 'MUST' FLOAT TO ALLOW FOR PROPER THERMAL MOVEMENT.

TRIM LAP NOTE FOR:
EXPANSION JOINT COVER & EXPANSION JOINT FRAME.
1. NOTCH AND LAP 2"
2. SET IN SEALANT.

EXPANSION JOINT DETAIL
NTS

BLDG #: MULTIPLE | SHEET 7OF 9
PROJECT NUMBER: 20M061CN
MACC NUMBER:

CHELSEA KREILEY

ROOF REPAIRS – HP445, HP465, HP485

USMC CAMP LEJEUNE

DTL5

ROOF DETAILS

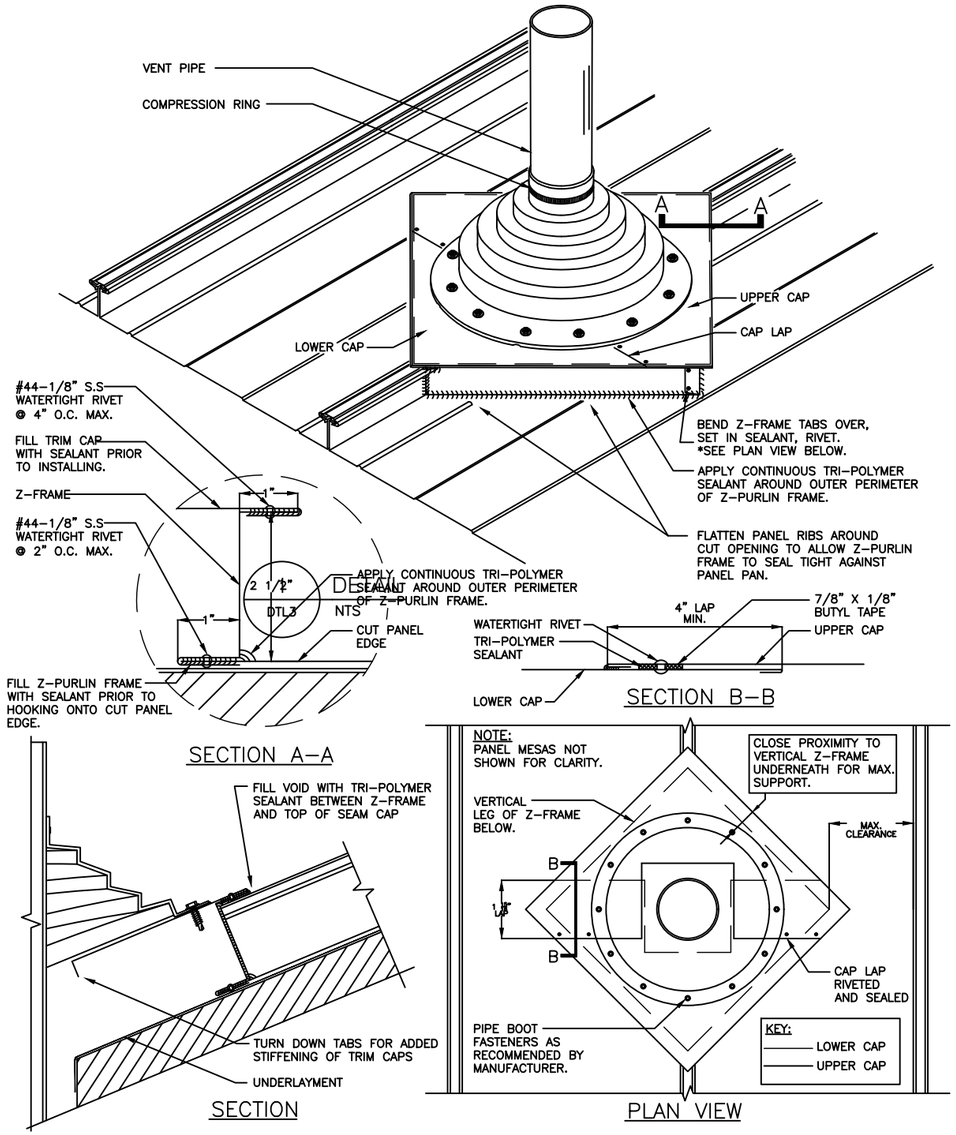

PIPE BOOT THROUGH PANEL SEAM
NTS

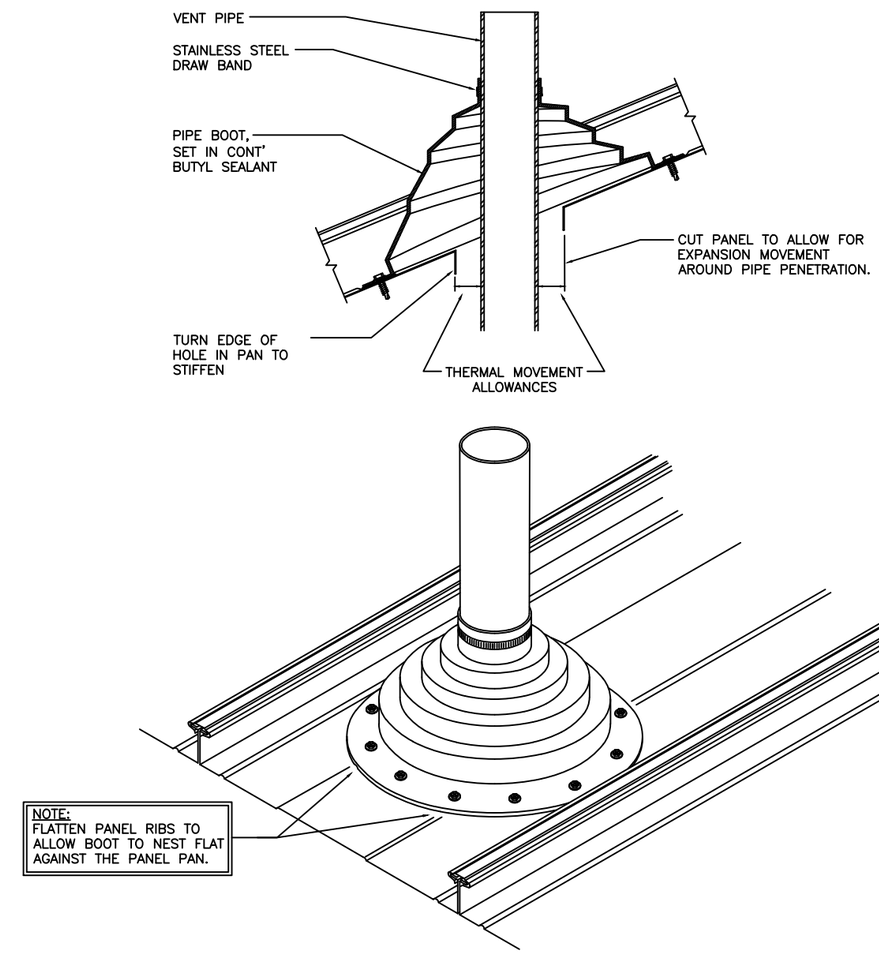

PIPE BOOT THROUGH PANEL DETAIL
NTS

BLDG #: MULTIPLE | SHEET 8OF 9
PROJECT NUMBER: 20M061CN
MACC NUMBER:
CHELSEA KREILEY
ROOF REPAIRS – HP445, HP465, HP485
USMC CAMP LEJEUNE
DTL6
ROOF DETAILS

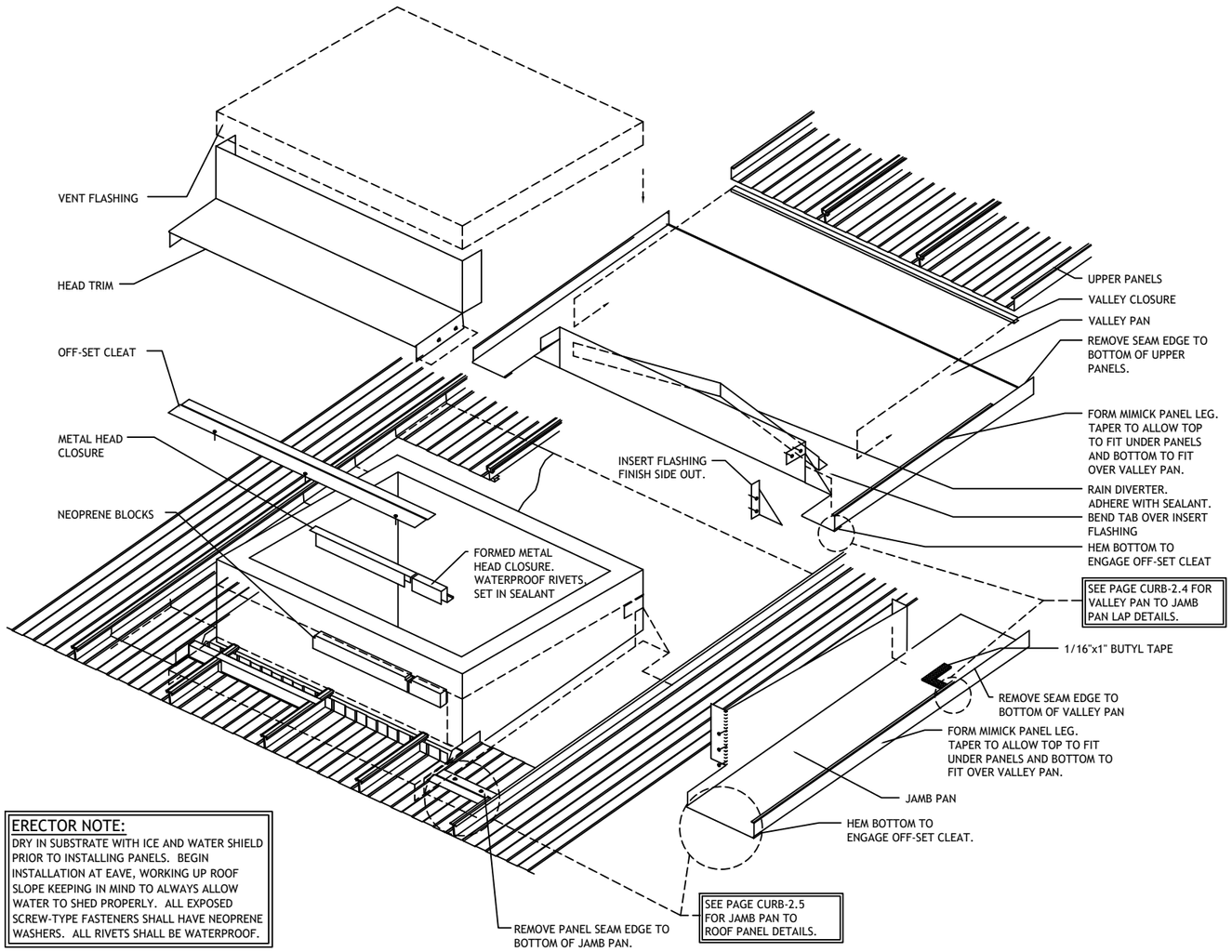

ERECTOR NOTE:
DRY IN SUBSTRATE WITH ICE AND WATER SHIELD PRIOR TO INSTALLING PANELS. BEGIN INSTALLATION AT EAVE, WORKING UP ROOF SLOPE KEEPING IN MIND TO ALWAYS ALLOW WATER TO SHED PROPERLY. ALL EXPOSED SCREW-TYPE FASTENERS SHALL HAVE NEOPRENE WASHERS. ALL RIVETS SHALL BE WATERPROOF.

CURB DETAIL
NTS

BLDG #: MULTIPLE | SHEET 9OF 9
PROJECT NUMBER: 20M061CN
MACC NUMBER:

CHELSEA KREILEY

ROOF REPAIRS – HP445, HP465, HP485

USMC CAMP LEJEUNE

DTL7

ROOF DETAILS