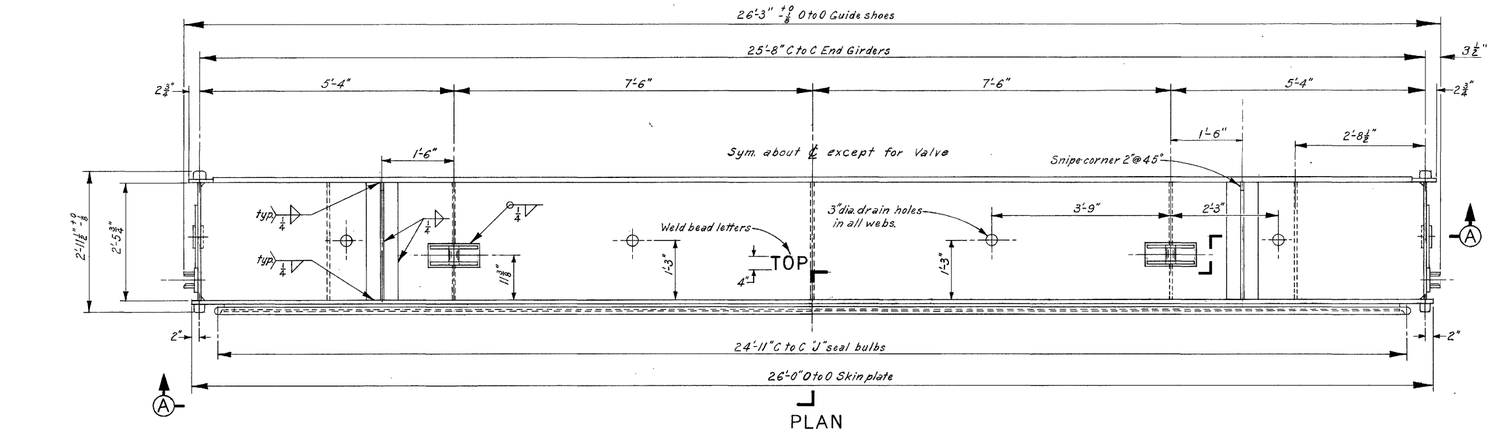

PLAN
Scale: ¾"=1'-0"

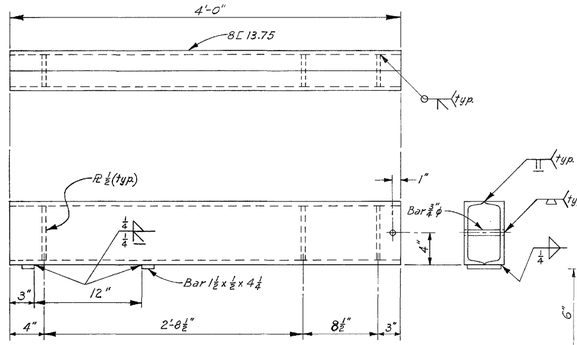

DOGGING BEAM DETAIL
Scale: 1½"=1'-0"

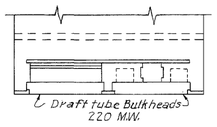

KEY PLAN
BAYS 3 thru 6

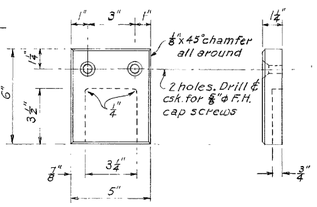

SPRING RETAINER
Scale 3"=1'-0"

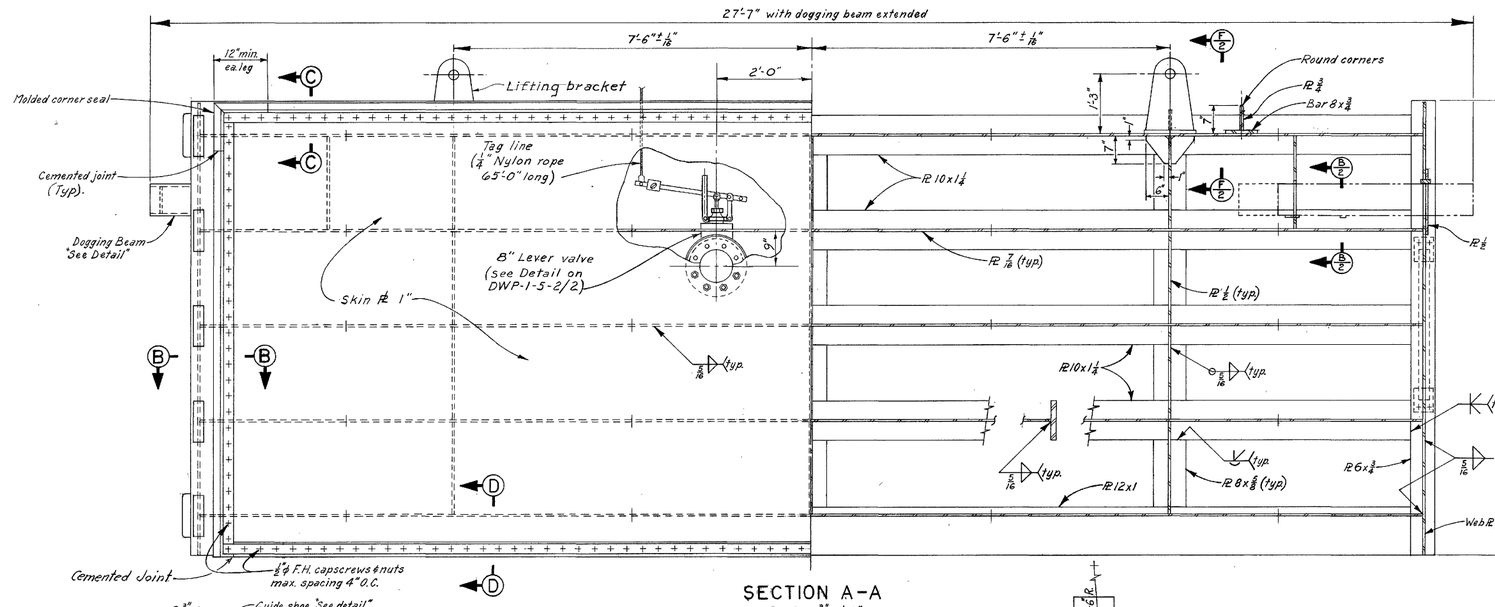

SECTION A-A
Scale: ¾"=1'-0"

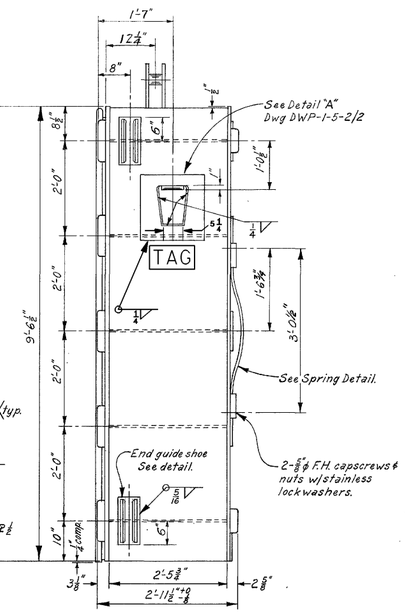

END ELEVATION
Scale: ¾"=1'-0"

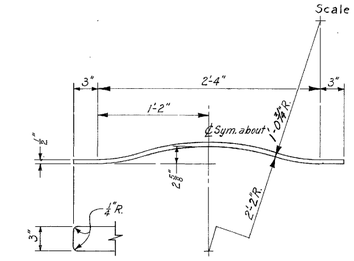

SPRING
Scale 1½"=1'-0"

NOTES

All materials to be structural steel unless noted.
Painting system no. 3. Paint all structural surfaces including those machined. See specifications.

Line drill 13/32" holes thru seal retainer bar, mounting bar and skin R after welding mounting bar to skin R; then, using retainer bar as template, drill rubber seal for tight fit on capscrews.
Capscrews and nuts for seals and springs to be of ASTM-A-276 type 300 series.
Material for springs shall be ASTM-A552, Grade 5160, Minimum Y.P. 180,000, produced under ASTM-A147.
Eight sets of two bulkhead sections each to be furnished and installed in dogged position under Pay Item (72)

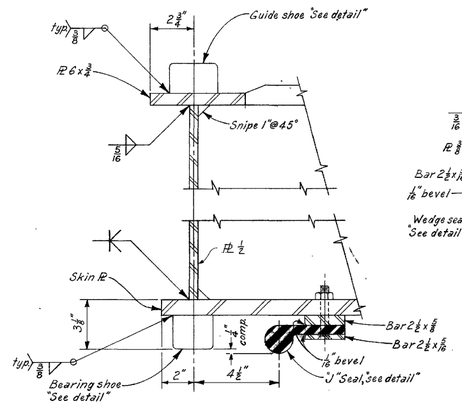

SECTION B-B
Scale: 3"=1'-0"

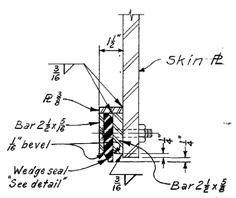

SECT. D-D
Scale: 3"=1'-0"

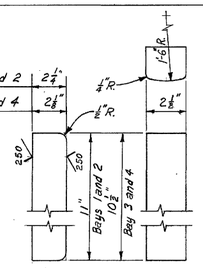

BEARING SHOE
Scale: 3"=1'-0"

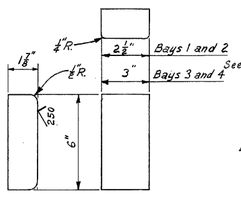

GUIDE SHOE
Scale: 3"=1'-0"

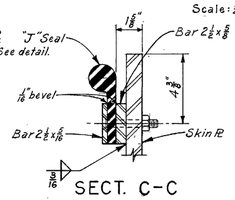

SECT. C-C
Scale: 3"=1'-0"

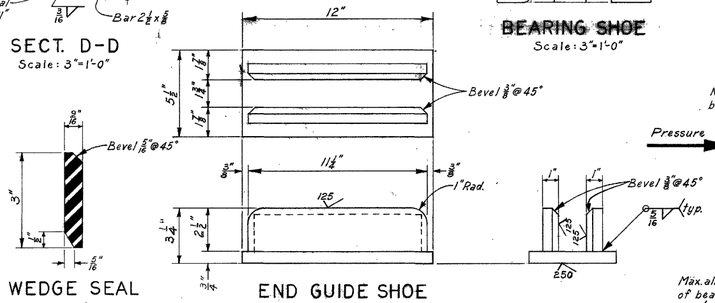

END GUIDE SHOE
Scale: 3"=1'-0"

WEDGE SEAL
Half Size

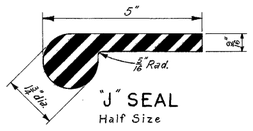

"J" SEAL
Half Size

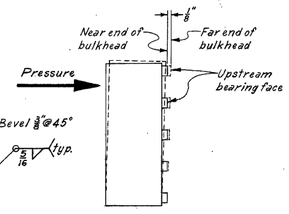

Max. allowable out of parallel of bearing contact faces on U/S side of bulkhead.

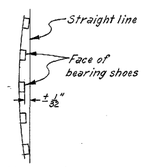

Allowable error in bearing shoe contact surfaces.

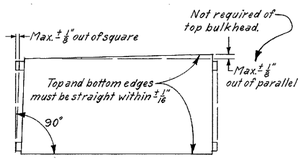

Edges and end guides.

BULKHEAD TOLERANCES
No Scale

REFERENCE DRAWINGS

DRAFT TUBE BULKHEAD 3 & 4 - BOTTOM SECTION ..DWP 1-5-2/2
DRAFT TUBE BULKHEAD GUIDES ..... DWP 1-5-1/1
DRAFT TUBE BULKHEAD LIFTING BEAM ..... DWP 1-3-2/1

AS CONSTRUCTED
HYDRO ELECTRIC DESIGN BRANCH, NPD
DATE: 1975 JUL 31 BY: C. J. McDonald

REVISION	DATE	DESCRIPTION	BY
C	10-23-08	ADDED TAG	KLH
B	75 July 31	As Constructed	C.J.M.
A	70 Jan 30	Revised number of gates.	JLN

U. S. ARMY ENGINEER DIVISION, N. P.
PORTLAND, OREGON

DESIGNED BY: J.M.C.
DRAWN BY: A.R.
CHECKED BY: J.M.C.
PREPARED: Paul E. Drake, HEAD, STRUCTURAL SECTION

DWORSHAK DAM AND RESERVOIR
NORTH FORK CLEARWATER RIVER, IDAHO
POWERHOUSE
GATES AND BULKHEADS
DRAFT TUBE BULKHEAD TOP SECTION - BAYS 3 THRU 6

SUBMITTED: L. T. Fisher, CHIEF, HYDRO-ELECTRIC DESIGN BRANCH
APPROVED: FOR DIV. ENGINEER: R. W. Bancroft, CHIEF, ENGINEERING DIVISION DATE: 1969 NOV 14
SCALE AS SHOWN SPEC. NO.
SHEET 124 **DWP-1-5-2/1**

ARMY-KILHAM STATIONERY & PRINTING CO., PORTLAND, ORE. F

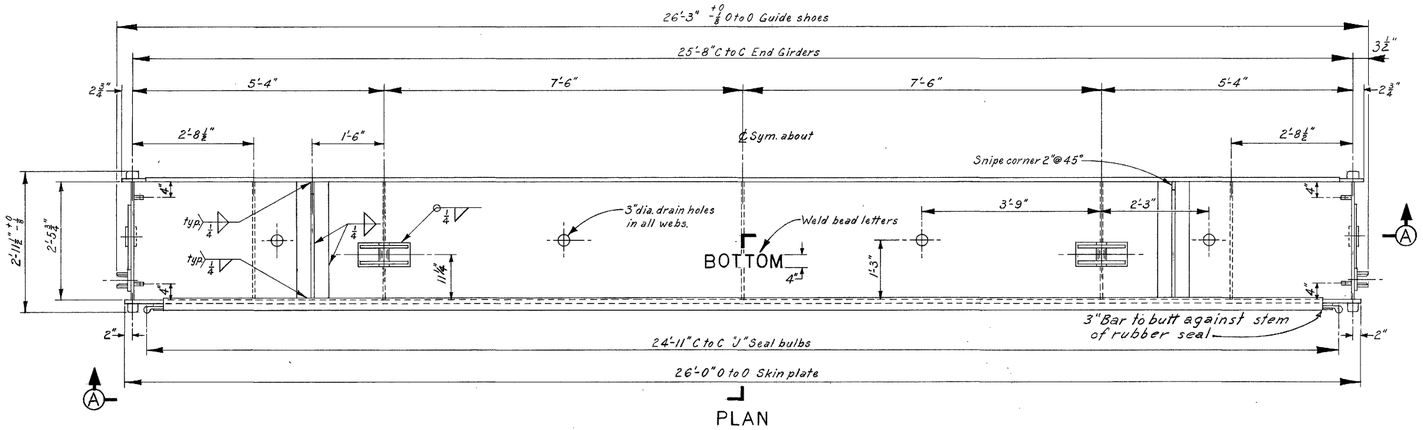

PLAN
Scale: ¾" = 1'-0"

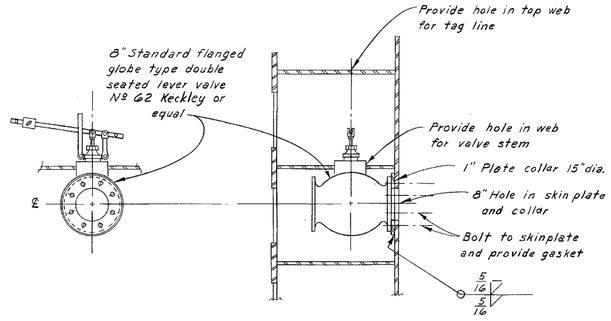

LEVER VALVE DETAIL
(Top Section Only.)
Scale: ¾" = 1'-0"

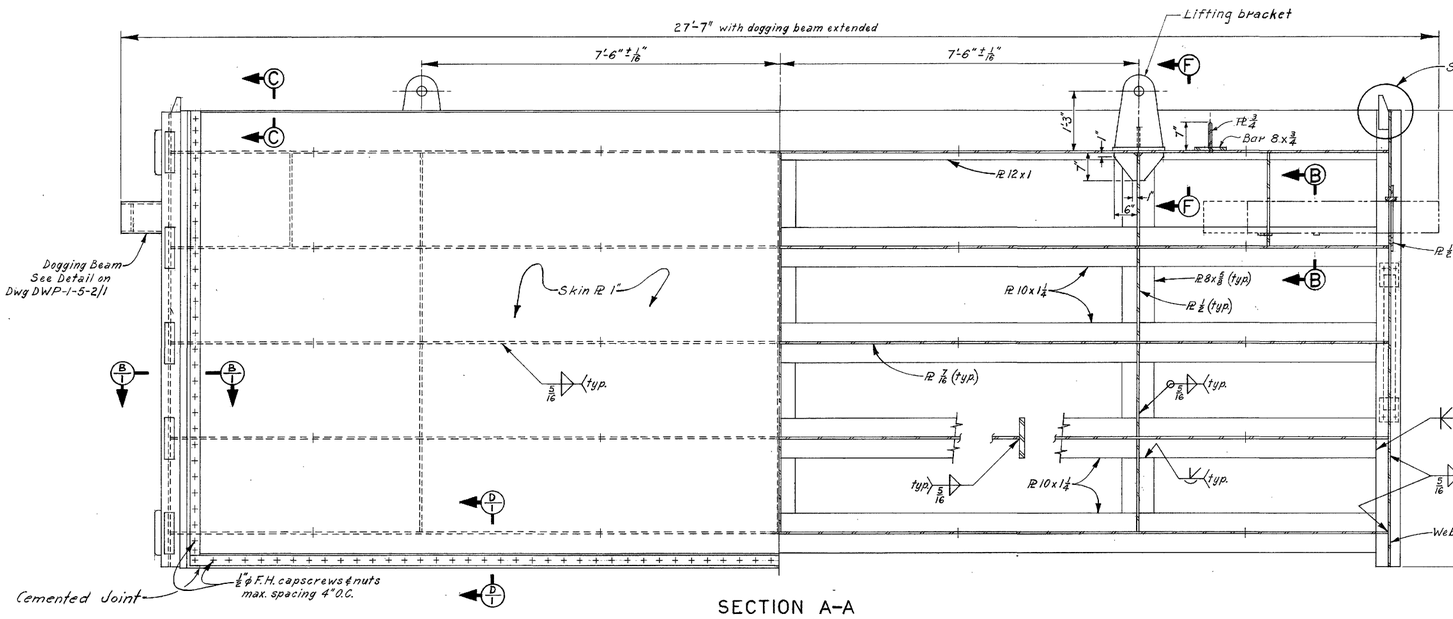

SECTION A-A
Scale: ¾" = 1'-0"

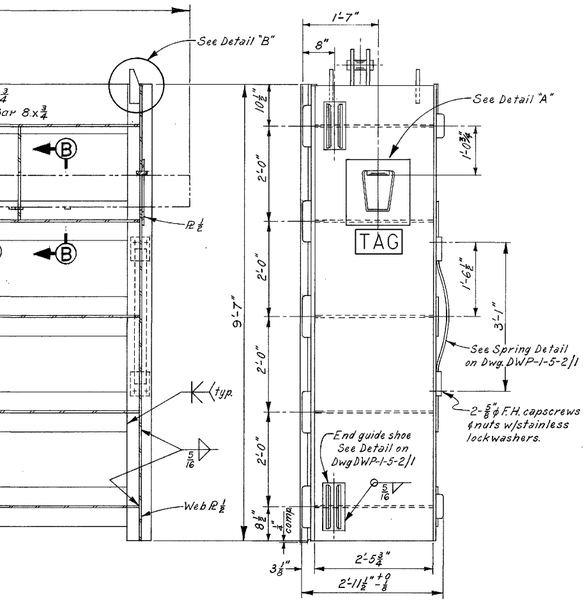

END ELEVATION
Scale: ¾" = 1'-0"

NOTES

For notes, reference drawings and tolerances see DWP-1-5-2/1.

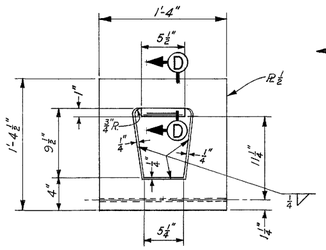

DETAIL A
Scale: 1½" = 1'-0"

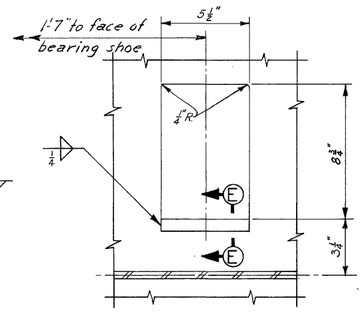

SECTION B-B
Scale: 3" = 1'-0"

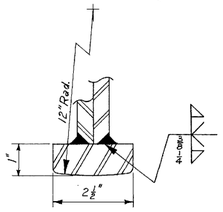

SECTION D-D
Half Size

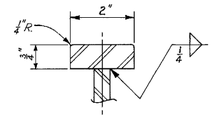

SECTION E-E
Half Size

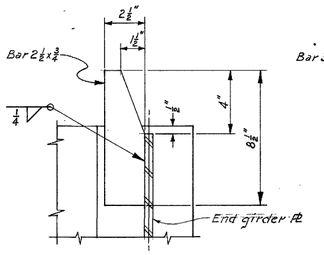

DETAIL B
Scale: 3" = 1'-0"

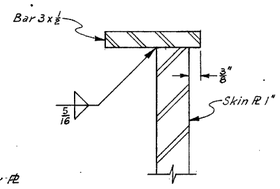

SECTION C-C
Half Size

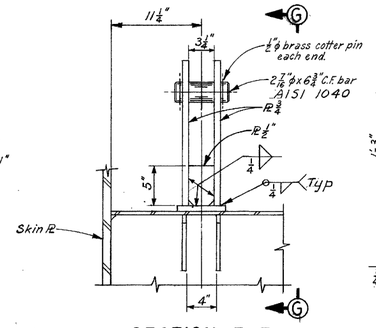

SECTION F-F
Scale: 1½" = 1'-0"

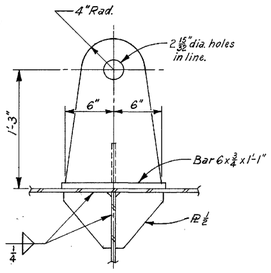

SECTION G-G
Scale: 1½" = 1'-0"

AS CONSTRUCTED
HYDRO ELECTRIC DESIGN BRANCH, NPD
DATE 1975 JUL 31 BY C. J. McLaren

REVISION	DATE	DESCRIPTION	BY
B	10-23-08	ADDED TAG	KLH
A	75 July 31	As Constructed	C.J.M

U. S. ARMY ENGINEER DIVISION, N. P.
PORTLAND, OREGON

DESIGNED BY J.M.C.
DRAWN BY A.P.
CHECKED BY J.M.C.
PREPARED: Paul E. Drake, HEADGATE/TRASHRACK/BULKHEAD SECTION

DWORSHAK DAM AND RESERVOIR
NORTH FORK CLEARWATER RIVER, IDAHO
POWERHOUSE
GATES AND BULKHEADS
DRAFT TUBE BULKHEAD
BOTTOM SECTION - BAYS 3 THRU 6

SUBMITTED: L. L. Fischer, CHIEF, HYDRO-ELECTRIC DESIGN BRANCH
APPROVED FOR DIV. ENGINEER: R. W. Bauman, CHIEF, ENGINEERING DIVISION DATE 1969 NOV 14
SCALE AS SHOWN SPEC. NO.
SHEET 125 DWP-1-5-2/2

INV. NO. DACW68-70-8-0031 VOL. NO. II

ARMY - KILHAM STATIONERY & PRINTING CO., PORTLAND, ORE. 7