USCGC FIR (WLB 213)

SPECIFICATION FOR DOCKSIDE REPAIRS

FY2026

Developed By: GS IBCTPL

(Rev-2, 20 May 2026)

TABLE OF CONTENTS

Revisions Record....iv
Consolidated List of References....v
Consolidated List of Government-furnished Property xii
Consolidated List of Critical Inspection Items....xv
Principal Characteristics....xvi
General Requirements 1
WORK ITEM 1: Fire Prevention Requirements 13
WORK ITEM 2: Tanks, Potable Water, Clean and Inspect....17
WORK ITEM 3: Hydraulically Operated Cargo Hatch, Inspect and Service....21
WORK ITEM 4: Vent Ducts, Engine And Motor Room, All, Commercial Cleaning....25
WORK ITEM 5: Vent Ducts, Galley and Pantry Room, All, Commercial Cleaning 28
WORK ITEM 6: Vent Ducts, Laundry Exhaust, Commercial Cleaning....31
WORK ITEM 7: Vent Ducts, All Other, Commercial Cleaning....34
WORK ITEM 8: Compressed Air Receivers and System Valves, All, Clean, Inspect, Hydro and Lift....37
WORK ITEM 9: Hull Fittings (Weight Handling Rigging Hardware), Inspect and Test....43
WORK ITEM 10: Hydraulic Chain Stoppers, Inspect And Service 48
WORK ITEM 11: Crossdeck Winches, Inspect and Service 52
WORK ITEM 12: Hydraulic Inhaul Winch, Inspect And Service....58
WORK ITEM 13: Mechanical Chain Stoppers, Inspect and Service....68
WORK ITEM 14: Warping Capstan, Inspect and Service....71
WORK ITEM 15: Single Point Davit, Inspect and Service 74
WORK ITEM 16: Commissary Hoist, Inspect and Service....78
WORK ITEM 17: Buoy Crane, Appleton EB600-60-40, Inspect and Service 82
WORK ITEM 18: Grey Water Holding Tanks, Clean and Inspect....88
WORK ITEM 19: Sewage Holding Tanks, Clean and Inspect 92
WORK ITEM 20: Sewage Piping, Clean and Flush 96
WORK ITEM 21: Tanks, Grey Water Holding, Preserve, Partial 100
WORK ITEM 22: Tanks (Sewage Holding), Preserve, Partial....103
WORK ITEM 23: SORS Cargo Rail Remove 106
WORK ITEM 24: Tanks, Potable Water, Preserve, Partial, ...109
WORK ITEM 25: Temporary Services, Provide - Cutter 112
WORK ITEM 26: Steering System PLC, Upgrade....115
WORK ITEM 27: Thruster Motor, Replace....118
WORK ITEM 28: Compartment Deck, Preserve....123
WORK ITEM 29: Air Conditioning Unit Foundations, AMR, Preserve 125
WORK ITEM 30: Shower Pan Renew....127
WORK ITEM 31: Sewage Piping, Renew 132
WORK ITEM 32: Deck Covering (Carpeting), Renew 136
WORK ITEM 33: Focsle Kickpipe Stuffing Tube, Renewal....139
WORK ITEM 34: Foc'sle Deck, Preserve 149
WORK ITEM 35: Power Circuit Breakers, Inspect, Maintain & Test....151
WORK ITEM 36: Independent NACE Inspector (Level 3), Provide....160
WORK ITEM 37: Tenting, Provide 163
WORK ITEM 38: Main Reduction Gear PTO's Seal, Renew 166
WORK ITEM 39: Steering Gear Heat Exchanger, Modify 170
WORK ITEM 40: Directional Control Valve, Upgrade....173
WORK ITEM 41: Single Point Davit Ladder, Renew 181
WORK ITEM 42: Port Anchor Windlass, Inspect and Service 185

WORK ITEM 43: Dining Provide 187
WORK ITEM 44: Lodging Provide 190

REVISIONS RECORD

This page is used to record specification revisions, which may have occurred subsequent to a Revision 0 (Rev-0) package. Information listed is intended to provide contractors and field unit personnel a means to ensure all the current specification revision pages are present when reviewing or utilizing this specification package.

DATE	REV#	WORK ITEM#	CHANGES MADE
4/28/2026	1	43 and 44	Added back in Messing and Berthing WIs left off in error
5/20/26	2	10 and 43	Added GFE to WI #10 and updated requirements in WI #43
5/20/26	2	10	Added missing info to tasks.
5/20/26	2	8,10,15,29,31	CIRs have been updated (added or removed)

NOTE : All work item and paragraph numbers listed above for a given revision correspond to same numbers in the previous revision. This revised specification is self-contained with all of the above listed changes incorporated.

CONSOLIDATED LIST OF REFERENCES

The below-listed documents form a part of this specification to the extent specified herein. Approval/publication dates or revision dates/numbers are also identified, to ensure that same document versions are used at the time of specification writing and during contract execution.

All Coast guard drawings, technical publications, and standard specifications will be provided to contractors by the Coast Guard at an appropriate time, or upon request, free of charge. Other Government documents may be accessed – free of charge – from links located on the SFLC website. Commercial sites provide access to their respective documents.

COAST GUARD DRAWINGS

Coast Guard Drawing 225-WLB 320-1, Rev. AR, Electrical One-Line Diagram

Coast Guard Drawing (CGDWG) 225-WLB-561-202, Rev B, JAN 2021, Steering Control Wiring Diagram

Coast Guard Drawing 225B WLB 581-001, Rev C, Anchor Handling System Arrangement

Coast Guard Drawing (DWG) 225B-WLB-180-011, Rev B, Bow & Stern Thruster

Coast Guard Drawing (DWG) 225B-WLB-201-2, Rev D, Access Removal Routes

Coast Guard Drawing (DWG) 225B-WLB-320-1, Rev AK, Electrical One Line Diagram

Coast Guard Drawing (DWG) 225B-WLB-437-3, Rev D, Thruster Control System Block & Elem Wrg Diag Modifications

Coast Guard Drawing (DWG) 225B-WLB-568-001, Rev B, Bow Thruster A & D

Coast Guard Drawing (DWG) 225B-WLB-568-002, Rev B, Stern Thruster Arrangement and Detail

Coast Guard Drawing (DWG) 225B-WLB-74-5, Rev A, Guideline for Field Cut Penetrations

Coast Guard Drawing 225 WLB 259-005, Rev C, Combustion Intake & Exhaust A&D Hull Block 940

Coast Guard Drawing 225B WLB 573-001, Rev E, Buoy Handling System Arrangement

Coast Guard Drawing 225B WLB 505-1, Rev D, General Requirements for Piping Systems

Coast Guard Drawing 225B WLB 512-001, Rev K, HVAC Diagram

Coast Guard Drawing 225B WLB 512-007, Rev B, HVAC A&D, Fr 66-92, Innerbttm & 1st Platform

Coast Guard Drawing 225B WLB 528-001, Rev G, Plumbing and Interior Deck Drains

Coast Guard Drawing 225B WLB 528-002, Rev D, Weather Deck Drains Diagram

Coast Guard Drawing 225B WLB 549-001, Rev A, Onboard Lubrication Requirements

Coast Guard Drawing 225B WLB 549-001, Rev C, Onboard Lubrication Requirements

Coast Guard Drawing 225B WLB 551-001, Rev G, Compressed Air System Diagram

Coast Guard Drawing 225B WLB 556-001, Rev F, Hydraulic System Diagram

Coast Guard Drawing 225B WLB 556-005, Rev D, Aft Hydraulic System A/D, Fr 66 Aft, Block 950, 970

Coast Guard Drawing 225B WLB 573-002, Rev -, Weight Handling System Arrangement

Coast Guard Drawing 225B WLB 573-009, Rev E, Bi-Dir Ch Stopper With Retractable Roller Stopper

Coast Guard Drawing 225B WLB 573-012, Rev -, Rising Sheave Chain Stopper Ripout Incidental to Upgrade

Coast Guard Drawing 225B WLB 573-013, Rev B, Rising Sheave Chain Stopper Mechanical Mods Incidental to Upgrade

Coast Guard Drawing 225B WLB 573-014, Rev -, Rising Sheave Chain Stopper Hydraulic Mods Incidental to Upgrade

Coast Guard Drawing 225B WLB 573-11, Rev G, ATON Tie Downs

Coast Guard Drawing 225B WLB 593-001, Rev D, Sewage and Waste Water System Diagram

Coast Guard Drawing 225B WLB 593-001, Rev E, Sewage and Waste Water System

Coast Guard Drawing 225B WLB 593-009, Rev B, Sewage Holding Tank

Coast Guard Drawing 225B WLB 593-1, Rev E, Sewage and Waste Water System Diagram

Coast Guard Drawing 225B WLB 601-001, Rev F, General Arrangement Inboard & Outboard Profiles

Coast Guard Drawing 225B WLB 601-001, Rev M; General Arrangement Inboard and Outboard Profiles

Coast Guard Drawing 225B WLB 672-001, Rev C, Storerooms, Cargo Stowage and Ship Store Arrangement and Details

Coast Guard Drawing 225B WLB_601_002, Rev. Y, Booklet Of General Drawings

Coast Guard Drawing 225B-WLB 549-1, Rev -, Onboard Lubrication Requirements

Coast Guard Drawing 225B-WLB 556-1, Rev B, Hydraulic System Diagram

Coast Guard Drawing 225B-WLB 573-1, Rev -, Buoy Handling System Arrangement

Coast Guard Drawing 225B-WLB 573-2, Rev -, Weight Handling System Arrangement

Coast Guard Drawing 225B-WLB 256-001, Rev P; Seawater Cooling Sys Diagram

Coast Guard Drawing 225B-WLB 505-1, Rev D; General Requirements for Piping Systems

Coast Guard Drawing 225B-WLB 528-8, Rev D Plumbing & Deck Drains A/D, Fr 76, Fwd Abv Mn Dk, Block 960a

Coast Guard Drawing 225B-WLB 528-9, Rev C, Plumbing & Deck Drains A/D, FR-76, Aft Abv Mn Dk, Block 970

Coast Guard Drawing 225B-WLB 532-13, Rev B, Potable Water System A/D, FR-76, Aft Abv Mn Dk

Coast Guard Drawing 225B-WLB 561-001, Rev C, Steering Gear Hydraulic Diagram

Coast Guard Drawing 225B-WLB 561-005, Rev E; Steering Gear Heat Exchanger Replacement

Coast Guard Drawing 225B-WLB 601-01, Rev J, General Arr Inboard and Outboard Profiles

Coast Guard Drawing 225B-WLB 601-01, Rev P, General Arr Inboard and Outboard Profiles

Coast Guard Drawing 225B-WLB 631-02, Rev G, Painting Schedule

Coast Guard Drawing 225B-WLB 634-01, Rev F, Deck Cover Schedule

Coast Guard Drawing 225B-WLB 634-1, Rev F, Deck Covering Schedule

Coast Guard Drawing 225B-WLB 644-1, Rev D, Sanitary & Laundry Spaces & Arrgt & Details

Coast Guard Drawing 225B-WLB 801-15, Rev B, Scantlings, Decks & Platforms

Coast Guard Drawing 225B-WLB_330_002, Rev M, Lighting System Forward of FR. 30 Hill Block 910/901

Coast Guard Drawing 225B-WLB_330_007, Rev T, Lighting System 02 Level & Above Hull Block 960B/975 & 970 Partial

Coast Guard Drawing 225B-WLB-180-005, Rev G, Foundations Hull Block 940

Coast Guard Drawing 225B-WLB-185-010, Rev D, Foundations to Suit Chiller Unit Installation Incidental to MMA

Coast Guard Drawing 225B-WLB-201-001, Rev D, Machinery Spaces Arrangement

Coast Guard Drawing 225B-WLB-438-002, Rev C, Buoy Deck Controls Install to Suit MMA Aton Crane

Coast Guard Drawing 225B-WLB-514-008, Rev A, MMA Chilled Water System Diagram

Coast Guard Drawing 225B-WLB-514-009, Rev A, MMA Chilled Water System A&D Below Main Deck

Coast Guard Drawing 225B-WLB-597-051, Rev A, SORS Hold Stowage and Handling Fittings

Coast Guard Drawing 225B-WLB-601-001, Rev P, General Arrangements, Inboard and Outboard Profiles

Coast Guard Drawing 225B-WLB-623-001, Rev H, Ladders - Vertical

Coast Guard Drawing 225-WLB _320_1, Rev AT, Electrical One-Line Diagram

Coast Guard Drawing 225-WLB 243-001, Rev B; PROPULSION SHAFTING ARRANGEMENT

Coast Guard Drawing 225-WLB 256-001, Rev U; Seawater Cooling Sys Diagram

Coast Guard Drawing 225-WLB 505-1, Rev D; General Requirements for Piping Systems

Coast Guard Drawing 225-WLB 561-001, Rev E Steering Gear Hydraulic Diagram

Coast Guard Drawing 225-WLB 561-005, Rev H; Steering Gear Heat Exchanger Replacement

Coast Guard Drawing 225-WLB 601-001, Rev AC, General Arrangements Inboard and Outboard Profiles

Coast Guard Drawing 225-WLB-437-210, Rev D, Buoy Deck Equipment Electrical Control System Mods Blk & Elem Wiring Diagram

Coast Guard Drawing 225-WLB-438-002, Rev D, Buoy Deck Controls Install to Suit MMA Aton Crane

Coast Guard Drawing 225-WLB-573-207, Rev -, Replacement DCV Amplifier Card Wiring Diagram

Coast Guard Drawing 225-WLB-597-020, Rev B, SORS Hold Stowage and Rail System

Coast Guard Drawing FL 2605-031, Rev D, Mechanical Chain Stopper, 1-7/8" Buoy Chain

Coast Guard Drawing FL 2605-034, Rev D, Mechanical Chain Stopper Repair Kit: 1-7/8", 1-5/8" & 1-1/4"

Coast Guard Drawing FL 7101-573, Rev L, Buoy Chain Winch Assy Model CW1

Coast Guard Drawing FL-1702-11, Rev -, Inspection of Sheaves

NAVSEA Drawing 803-1385866, Rev E, Penetration, Bulkhead and Deck

COAST GUARD PUBLICATIONS

Coast Guard Commandant Instruction (COMDTINST) 9077.1 (series), Equipment Lockout/Tags-Plus Instruction

Coast Guard Commandant Instruction (COMDTINST) M10360.3, Jun 2006, Coatings and Colors Manual

Coast Guard Technical Publication (TP) 3559, SWBS 581B, Anchor Windlass, P/S - Model BMD-478

Coast Guard Technical Publication (CGTP) 3555, SWBS 561, Section A, Jan 2021, Steering Gear System- Model 990192-1

Coast Guard Technical Publication (TP) 10512, Section 573-A, July 2018, Buoy Handling Crane – Model EB600-60-40

Coast Guard Technical Publication (TP) 10996, Manufacturers Instruction Book-SWBS Group(s) 514, Section A, Chilled Water Air Conditioning Plant – Model AMC-334-2Q – Installation & Operating Manual

Coast Guard Technical Publication (TP) 11101, SWBS 583, Section A (SWBS 583A), Davit, Single Point Slewing Arm Model - RAD30 - 15.5 (BMD-710)

Coast Guard Technical Publication (TP) 3498, Section A, Jul 2015, Buoy Chain Winch

Coast Guard Technical Publication (TP) 3498, SWBS 573, Feb 2021, Buoy Chain Winch

Coast Guard Technical Publication (TP) 3534A_SWBS 324_A, Switchboards, Ship Service and Emergency Diesel Generator – Model D213041-M1.

Coast Guard Technical Publication (TP) 3555, 21-May-1996, Steering Gear Systems

Coast Guard Technical Publication (TP) 3556, SWBS 568, Section A, Feb 2021, Bow and Stern Thrusters

Coast Guard Technical Publication (TP) 3558, Apr 2008, Manufacturer's Instruction Book-SWBS Group(s) 573, Section B, Cross Deck Winch – Model BMD-471

Coast Guard Technical Publication (TP) 3559, Section 582B, Apr 2009, Aft Capstan, 21" - Model BMD-475

Coast Guard Technical Publication (TP) 3562, Sep 2013, SWBS 589, Section C, Dumbwaiter, Model –F-WK-806

Coast Guard Technical Publication (TP) 3717, Jun 2003, Hydraulic Cargo Hatch

Coast Guard Technical Publication (TP) 3720, 01-AUG-2024, Single Point Slewing Arm Davit Model RAD30 – 15.5, Operation, Maintenance, & Repair Instructions, Appleton Marine

Coast Guard Technical Publication (TP) 3749, 26-APR-05, 1-7/8 Inch ATON Mechanical Chain Stopper

Coast Guard Technical Publication (TP) 3750, SWBS 573-A, Dec 2012, Rising Sheave Chain Stopper

Coast Guard Technical Publication (TP) 3796, Section A, Aug 2006, Galley Hood – Model NBDL-60 (13'-4")

Coast Guard Technical Publication (TP) IB-H2-0002-V0, Nov 2024, ROPULSION SHAFTING AND BEARINGS - MODEL 01-BCP, 587.55TS-94365A & 1K571500 - TECHNICAL MANUAL

Fire Prevention and Response

Surface Forces Logistics Center Standard Specification (SFLC Std Spec) 0000, 2022, General Requirements

Surface Forces Logistics Center Standard Specification (SFLC Std Spec) 0740, 2022, Welding and Allied Processes

Surface Forces Logistics Center Standard Specification (SFLC Std Spec) 2351, 2022, Overhaul DC Generators & Motors

Surface Forces Logistics Center Standard Specification (SFLC Std Spec) 3041, 2022, Shipboard Electrical Cable Test

Surface Forces Logistics Center Standard Specification (SFLC Std Spec) 3042, 2022, Shipboard Electrical Cable Removal, Relocation, Splice, Repair, and Installation

Surface Forces Logistics Center Standard Specification (SFLC Std Spec) 6310, 2022, Requirements for Preservation of Ship Structures

Surface Forces Logistics Center Standard Specification 0000 (SFLC Std Spec 0000), 2014, General Requirements

Surface Forces Logistics Center Standard Specification 0000 (SFLC Std Spec 0000), 2020, General Requirements

Surface Forces Logistics Center Standard Specification 0000 (SFLC Std Spec 0000), 2022, General Requirements

Surface Forces Logistics Center Standard Specification 0000 (SFLC Std Spec 0000), Jan 2022, General Requirements

Surface Forces Logistics Center Standard Specification 0000 (SFLC Std Spec 0000), Latest Version, General Requirements

Surface Forces Logistics Center Standard Specification 0740 (SFLC Std Spec 0740), 2020, Welding and Allied Processes

Surface Forces Logistics Center Standard Specification 0740 (SFLC Std Spec 0740), 2022, Requirements for Welding and Allied Processes

Surface Forces Logistics Center Standard Specification 0740 (SFLC Std Spec 0740), 2022, Welding and Allied Processes

Surface Forces Logistics Center Standard Specification 0740 (SFLC Std Spec 0740), Jan 2012, Welding and Allied Processes

Surface Forces Logistics Center Standard Specification 0740 (SFLC Std Spec 0740), Latest Version, Welding and Allied Processes

Surface Forces Logistics Center Standard Specification 0850 (SFLC Std Spec 0850), Jun 2009, General Requirements for Drawing Preparation

Surface Forces Logistics Center Standard Specification 3020 (SFLC Std Spec 3020), 2020, Overhaul AC Electrical Motors

Surface Forces Logistics Center Standard Specification 3041 (SFLC Std Spec 3041), 2020, Shipboard Electrical Cable Test

Surface Forces Logistics Center Standard Specification 3042 (SFLC Std Spec 3042), 2020, Shipboard Electrical Cable Removal, Relocation, Splice, Repair, and Installation

Surface Forces Logistics Center Standard Specification 3042 (SFLC Std Spec 3042), 2022, Shipboard Electrical Cable Removal, Relocation, Splice, Repair, and Installation

Surface Forces Logistics Center Standard Specification 5000 (SFLC Std Spec 5000), 2014, Auxiliary Machine Systems

Surface Forces Logistics Center Standard Specification 5000 (SFLC Std Spec 5000), 2020, Auxiliary Machine Systems

Surface Forces Logistics Center Standard Specification 5000 (SFLC Std Spec 5000), 2022, Auxiliary Machine Systems

Surface Forces Logistics Center Standard Specification 5100 (SFLC Std Spec 5100), 2020, Clean Shipboard Ventilation Systems

Surface Forces Logistics Center Standard Specification 5550 (SFLC Std Spec 5550), 2022, Fire Prevention and Response

Surface Forces Logistics Center Standard Specification 5550 (SFLC Std Spec 5550), Latest Version,

Surface Forces Logistics Center Standard Specification 6310 (SFLC Std Spec 6310), 2020, Auxiliary Machine Systems

Surface Forces Logistics Center Standard Specification 6310 (SFLC Std Spec 6310), 2020, Requirements for Preservation of Ship Structures

Surface Forces Logistics Center Standard Specification 6310 (SFLC Std Spec 6310), 2022, Preserve Ship Structures

Surface Forces Logistics Center Standard Specification 6310 (SFLC Std Spec 6310), 2022, Requirements for Preservation of Ship Structures

Surface Forces Logistics Center Standard Specification 6310 (SFLC Std Spec 6310), Latest Version, Requirements for Preservation of Ship Structures

Surface Forces Logistics Center Standard Specification 6341 (SFLC Std Spec 6341), 2022, Install New Deck Covering Systems

Surface Forces Logistics Center Standard Specification 8635 (SFLC Std Spec 8635), 2022, Temporary Services

Surface Forces Logistics Center Standard Specification 8636 (SFLC Std Spec 8636), 2022, Temporary Hull Accesses

OTHER REFERENCES

American National Standards Institute/American Water Works Association (ANSI/AWWA) C652, 2011, Disinfection of Water-Storage Facilities

American National Standards Institute/National Electrical Manufacturers Association (ANSI/NEMA) AB 4, Mar 2011, Guidelines for Inspection and Preventive Maintenance of Molded Case Circuit Breakers Used in Commercial and Industrial Applications

American National Standards Institute/NSF International (ANSI/NSF) 61, 2008, Drinking Water System Components - Health Effects

American National Standards Institute/NSF International (ANSI/NSF) 61, 2015, Drinking Water System Components - Health Effects

American Society for Testing and Materials (ASTM) International F1508, 2016, Standard Specification for Angle Style, Pressure Relief Valves for Steam, Gas, and Liquid Services

American Society of Mechanical Engineers (ASME) B16.34, 2017, Valves-Flanged, Threaded, and Welding End

ASTM International (ASTM) D1330, 2010, Standard Specification for Rubber Sheet Gaskets

ASTM International (ASTM) D1330, 2015, Standard Specification for Rubber Sheet Gaskets

ASTM International (ASTM) D5363, 2008, Standard Specification for Anaerobic Single Component Adhesives (AN)

Code of Federal Regulations (CFR) Title 29, Part 1910, Occupational Safety and Health Standards

Code of Federal Regulations (CFR) Title 29, Part 1915, Occupational Safety and Health Standards for Shipyard Employment

Code of Federal Regulations (CFR) Title 29, Part 1915, Occupational Safety and Health Standards for Shipyard Employment

Code of Federal Regulations (CFR) Title 40, Protection of the Environment

Federal Specification (Fed Spec) DDD-C-95, Mar 1972, Carpets and Rugs, Wool, Nylon, Acrylic, Modacrylic

Manufacturers Standardization Society of the Valve and Fittings Industry (MSS) SP-61, 2019 Edition, Pressure Testing Of Valves

Manufacturers Standardization Society of the Valve and Fittings Industry (MSS) SP-67, 2017 Edition, Butterfly Valves

Manufacturers Standardization Society of the Valve and Fittings Industry (MSS) SP-72, 2010 Edition, Ball Valves with Flanged or Butt-Welding Ends for General Service

Manufacturers' Standardization Society of the Valve and Fittings Industry (MSS) SP-80, 2019 Edition, Bronze Gate, Globe, Angle and Check Valves

MIL-A-46106, Jun 1992, Adhesive-Sealants, Silicone, Rtv, One-Component

MIL-D-18873, Jul 1982, Deck Covering Magnesia Aggregate Mixture

MIL-D-21631, Dec 1990, Deck Covering, Latex Concrete

MIL-D-23134, Jul 1999, Deck Underlay and Covering, Insulating, Magnesia Aggregate Mixture

Mil-DTL-24643/15, Power and Lighting, Watertight, Circuit Integrity

MIL-I-3064, Mar 1991, Insulation, Electrical, Plastic-Sealer

MIL-PRF-24176 , Oct 2004, Cement, Epoxy, Metal Repair And Hull Smoothing (Metric)

MIL-PRF-24613, Dec 1990, Deck Covering Materials, Interior, Cosmetic Polymeric

MIL-PRF-3135, Nov 1986, Deck Covering Underlay Materials

Mil-S-24235/9E, 1992, Stuffing Tubes, Metal, And Packing Assemblies For Electric Cables, Brass and Steel, for Decks and Bulkhead With Pipe Protection.

MIL-S-45180, 1998; Sealing Compound, Gasket, Hydrocarbon Fluid and Water Resistant

MIL-STD-1689, Nov 1990, Fabrication, Welding and Inspection of Ships Structure

MIL-STD-2003, Sep 2009, Electric Plant Installation Standard Methods for Surface Ships and Submarines (Cable)

MIL-STD-2003-3A, Sep 2009, Electric Plant Installation Standard Methods for Surface Ships & Submarines (Penetrations)

Naval Ship's Technical Manual (NSTM) Chapter 634, Dec 2001, Deck Covering

NAVSEA Technical Publication T9074-AD-GIB-010/1688, (TP 1688), July 2012, Requirements for Fabrication, Welding, and Inspection of Submarine Structure

The Society for Protective Coatings (SSPC) Surface Preparation Specification No.1 (SSPC-SP 1), 2004, Solvent Cleaning

The Society for Protective Coatings (SSPC) Surface Preparation Specification No.1 (SSPC-SP 1), Solvent Cleaning

The Society for Protective Coatings (SSPC) Surface Preparation Specification No.11 (SSPC-SP 11), 2013, Power Tool Cleaning to Bare Metal

The Society for Protective Coatings (SSPC) Surface Preparation Specification No.11 (SSPC-SP 11), Power Tool Cleaning to Bare Metal

The Society for Protective Coatings (SSPC) Surface Preparation Specification No.3 (SSPC-SP 3), Power Tool Cleaning)

The Society for Protective Coatings (SSPC), Paint Application Specification No. 2 (PA-2), Procedure for Determining Conformance to Dry Coating Thickness Requirements

The Society for Protective Coatings (SSPC)/NACE International (NACE) Joint Surface Preparation Standard SSPC-SP 10/NACE No.2, 2007, Near-White Blast Cleaning

The Society for Protective Coatings SSPC-SP 10/NACE No.2, Near-White Blast Cleaning

Underwriters Laboratories Inc. (UL) 1066, Low-Voltage AC and DC Power Circuit Breakers Used in Enclosures, Aug. 2022

CONSOLIDATED LIST OF GOVERNMENT-FURNISHED PROPERTY

The following is a list of property, which the Government will furnish. This list supersedes any other material obligations indicated or implied by referenced drawings.

WORK ITEM	MTI	ITEM DESCRIPTION	NSN/PN	QTY	ESTIMATED COST ($/UNIT)
10	N	Repair Kit, HYD Chain Stopper Rising Sheave (for Para. 3.2, Tasks #2 and #3)	NSN: 2040-01-483-3947	2 ea.	2,631.46
10	N	Cylinder, Actuating Linear	NSN: 3040-01-483-3373	4 ea.	1,777.71
11	N	Hand Pump SS	NSN: 4320-01-517-1444	1 ea	1,499.66
11	N	Pressure Gauge - Model BMD-471	NSN: 6685-01-437-2519	4 ea	43.79
11	N	Wire Rope Assembly	NSN: 4010-01-643-2077	4 ea	900.00
11	N	Hydraulic Brake Repair Kit - Model BMD-471	NSN: 3950-01-526-9090	4 ea.	913.00
11	N	Counterbalance Valve - Model BMD-471	NSN: 4810-01-353-0586	4 ea.	150.00
11	N	Shuttle Valve - Model BMD-471	NSN: 4820-01-317-2748	4 ea.	35.00
11	N	Hydraulic Motor Seal Kit - Model BMD-471	NSN: 5330-01-475-4566	8 ea.	84.00
11	N	Clutch Shoe - Model BMD-471	NSN: 4910-01-475-4125	4 ea.	56.90
11	N	Drum Bushing - Model BMD-471	NSN: 3950-01-631-0884	8 ea.	272.00
11	N	Shaft Bushing - Model BMD-471	NSN: 3950-01-631-0771	4 ea.	298.00
11	N	Gearbox Seal Kit (For Winch Gearbox Assemblies) - Model BMD-471	NIIN: XFC343225 PN: YMD-8194-R	4 ea.	70.00
11	N	Control Station Repair Parts. Kit	NSN: 6110-01-644-9898	4 ea.	438.00
11	N	Flag Block Pivot Bearing	NSN: 3110-01-644-9905	4 ea.	675.00
11	N	Flag Block Bearing Cup, Sheave	NSN: 3110-01-644-9670	4 ea.	231.00
11	N	Flag Block Bearing Cone, Sheave	NSN: 3110-01-013-4036	4 ea.	182.00
11	N	Seal	NSN: 5330-01-287-2826	4 ea.	104.00
11	N	Manifold Repair Kit	PN: YMD-8192-R	4 ea.	551.00
12	N	Roller bearing Unit	NSN: 3130-01-504-4363	2 ea.	4,012.00
12	N	Grease seal	NSN: 5330-01-462-5544	4 ea.	79.25
12	N	Level wind pivot	NSN: 3120-01-621-2293	1 ea.	1,139.00

		bushing			
12	N	Level wind thrust bearing	NSN: 3120-01-621-2300	2 ea.	483.30
12	N	Rexroth DCV	NSN: 4810-01-507-0037	1 ea.	208.29
12	N	Rexroth Sandwich Flow Control	NSN: 4810-01-505-9289	1 ea.	250.00
12	N	Sun Sandwich Relief Valves	NSN: 4820-01-439-2451	2 ea.	900.00
12	Y	Level Wind Hydraulic Cylinder	NSN: 3040-01-441-3721	1 ea.	7,423.00
12	N	3:1 Pilot Ratio, Vented Counterbalance Valve Assembly	NSN: 4820-01-563-5841	1 ea	98.70
12	N	Fully Adjustable Needle Valve	NSN: 4820-01-416-0579	1 ea	48.75
12	N	Wire Rope Assembly	NSN: 4010-01-646-6972	1 ea.	500.00
12	Y	**Hydraulic Motor	NSN: 4320-01-445-2248	1 ea	23,998
12	N	**Pump, Hydraulic Ram, Hand Driven	NSN: 4320-01-286-4065	1 ea.	419.77
12	N	**Cylinder Pin	NSN: 5315-01-515-9847	1 ea	500.00
12	N	**Cylinder Pin	NSN: 5315-01-515-9912	1 ea	520.00
13	N	Hardware Kit, Pins	NSN: 2030-01-485-7209	2 ea.	528.47
13	N	Hardware Kit, Mechanical	NSN: 2030-01-485-7215	2 ea.	538.91
15	N	Swing Brake Seal Kit	NSN: 5330-01-390-3514 PN: 90-016-2011	2 ea	68.45
15	N	Swing Brake Disc Kit	NSN: 3010-01-464-1040 PN: 90-016-2131	2 ea	187.20
15	N	Swing Holding Valve	NSN: 4820-01-466-4918 PN: CBEA-LHV-YHL (Sun Hydraulics)	1 ea	251.50
15	N	Wire Rope Assembly	NSN: 4010-01-620-9604 PN: JWCG062100PL	1 ea	660.00
17	N	Main Fall Wire Rope	NSN: 4010-01-486-0047 PN: JWCG13001919PL	1	2,642.00
17	N	Aux Fall Wire Rope	NSN: 4010-01-594-2228 PN: JWCG75200637PL	1	805.32
26	N	Siemens CPU 1214	NSN: 7042-01-693-4330 PN: 6ES7214-1AG40-0XB0	2 ea.	400.00
26	N	Siemens Memory Card, S7-1200, 4MB	NSN: 7050-12-414-4763 PN: 6ES7954-8LC03-0AA0	2 ea.	60.00
26	N	Siemens Expansion Module, S7-1200, 8 DI, 8 DO	NSN: 5998-01-693-4347 PN: 6ES7223-1BH32-0XB0	2 ea.	255.00
27	Y	Thruster Motor, DC	NSN: 6105-01-687-0855	2 ea.	97,200.00
27	Y	Thruster Motor, Blower	NSN: 6105-01-461-8718	2 ea.	623.29
27	Y	Coupling, Shaft, Assembly	NSN: 3040-01-F23-6730	2 ea.	25,900.00

38	N	Oil Seal, Split	PN: 6001-2378 Drawing 010170-0353; 80 .	2 ea.	250
40	N	Directional Control Valve (DCV)	NSN: 4810-01-F19-5719 PN: 4WRE10E75-2X/G24K4/V	1 ea.	1137.00
40	N	Amplifier Card	NSN: 5996-01-F19-5720 PN: VT-VRPA2-2-1X/V0/T1	1 ea.	958.21
40	N	Amplifier Card Holder	NSN: 5996-01-F19-5721 PN: VT3002-1-2X/48F	1 ea.	367.50
40	N	Mating Connector, 4P G4WIF PG7 SW	NSN: 5935-01-F19-5722 PN: R900023126	1 ea.	150.00

***Government-loaned property, which shall be returned to the vessel upon completion of the availability.**
****New or refurbished equipment that the Government may provide for installation in place of existing equipment.**
*****Government-furnished property, which is to be supplied by either the vessel or the C4IT ServiceCenter**

CONSOLIDATED LIST OF CRITICAL INSPECTION ITEMS

The following is a list of work items, which contain Critical Inspection reports, which the Contractor must complete within the first 25% of the availability contract period (see SFLC Std Spec 0000, paragraph 3.2.6.5 (Inspection report particulars)):

Work Item	Title
3	Hydraulically Operated Cargo Hatch, Inspect and Service
~~8~~	~~Compressed Air Receivers and System Valves, All, Clean, Inspect, Hydro and Lift~~
10	Hydraulic Chain Stoppers, Inspect And Service
11	Crossdeck Winches, Inspect and Service
12	Hydraulic Inhaul Winch, Inspect And Service
13	Mechanical Chain Stoppers, Inspect and Service
14	Warping Capstan, Inspect and Service
15	Single Point Davit, Inspect and Service
16	Commissary Hoist, Inspect and Service
17	Buoy Crane, Appleton EB600-60-40, Inspect and Service
26	Steering System PLC, Upgrade
28	Compartment Deck, Preserve
31	Sewage Piping, Renew
34	Foc’sle Deck, Preserve
35	«Type» Circuit Breakers, Inspect, Maintain & Test
40	Directional Control Valve, Upgrade
42	

PRINCIPAL CHARACTERISTICS

225' WLB (B-CLASS)	
PHYSICAL	
Length overall	225' 0"
Length between perpendiculars	206' 0"
Maximum beam	46'
Designed draft	13' 0"
Full load displacement	1905.6 Long Tons SW
Light ship displacement	1500.7 Long Tons SW
Minimum operating displacement	1869.2 Long Tons SW
Mast height (above 12' waterline)	67' 5"
Anchor	Two 4000 lb standard Navy stockless anchors, 8 shots each, port and starboard, 1-3/8 die lock chain
HULL	
Bilge keels (port & starboard)	Frames 42-79
Frame spacing	
FR 0 to 12	21"
FR 12 to 30	22"
FR 30 to 102	24"
MACHINERY	
Main propulsion	Diesel Reduction
Diesel engines	Two Caterpillar 3608, TA, 3100 BHP each @ 900 RPM
Number of propellers	1
Number of blades	4
Diameter	10'
Pitch	Controllable
RPM	254
Ship's service diesel generators	Two Caterpillar 3508 TA, 450 KW
Emergency diesel generator	One Caterpillar 3406 DITA, 280 KW
Shore tie	Two 450 VAC, 400 Amp, 3-wire
Shaft bearing, forward	Cooper Bearing 01-BCP-1400-EX-TL
Shaft bearing, aft	Water Lubricated Cutless Bearing
TANK CAPACITIES	
Diesel oil	76,498 gal.
Fresh water capacity	8056 gal.
Hydraulic oil capacity	2785 gal.
Lube oil storage	764 gal.
Grey water tank	2700 gal.
Sewage holding tank	1700 gal.

General Requirements

1. SCOPE

1.1 Intent. This standard specification invokes general requirements for conducting vessel repairs performed at a commercial contractor's facility for Coast Guard vessels.

1.2 Term interchangeability. The terms 'Contractor', 'CG Yard', 'NAVSTA EVERETT', 'shipyard', 'Base', and 'Coast Guard Industrial' are used interchangeably in this specification. Where the primary service provider is Coast Guard personnel, references to contractor and other noted descriptors within this specification or within drawings, publications, SFLC Standard Specifications or other commercial and military references are deemed the same as prime service provider.

2. REFERENCES

COAST GUARD DRAWINGS

None

COAST GUARD PUBLICATIONS

Coast Guard Commandant Instruction (COMDTINST) M10360.3 (series), Coatings and Color Manual

Surface Forces Logistics Center Standard Specification 0000 (SFLC Std Spec 0000), Latest Version, General Requirements

Surface Forces Logistics Center Standard Specification 0740 (SFLC Std Spec 0740), Latest Version, Welding and Allied Processes

Surface Forces Logistics Center Standard Specification 5550 (SFLC Std Spec 5550), Latest Version,

Fire Prevention and Response

Surface Forces Logistics Center Standard Specification 6310 (SFLC Std Spec 6310), Latest Version, Requirements for Preservation of Ship Structures

OTHER REFERENCES

Code of Federal Regulations (CFR) Title 29, Part 1915, Occupational Safety and Health Standards for Shipyard Employment

NAVSEA Technical Publication T9074-AD-GIB-010/1688, (TP 1688), July 2012, Requirements for Fabrication, Welding, and Inspection of Submarine Structure

3. REQUIREMENTS

3.1 General. The Contractor must conform to all requirements specified in SFLC Std Spec 0000 and in this item, as applicable, during the performance of this availability. The requirements in this WI applies to all work under the scope of this contract, whether explicitly stated in all following work items or not, and to all other work subsequently authorized by changes, modifications, or extensions to the contract.

3.1.1 The Contractor must conform to all requirements specified in SFLC Std Spec 5550 and in the Fire Protection and Response work item, as applicable, during the performance of this availability.

3.1.1.1 Fire Safety Plan submission. The Contractor must submit a copy of the CFR 1915, Subpart P, Fire Safety Plan with the Contractor's bid when work will be conducted in a Contractor–owned facility. Include any MOA(s) with local firefighting facilities.

3.1.1.2 Fire Plan submission. The Contractor must submit a copy of the developed availability specific fire plan, as requested in the Fire Protection and Response work item, seven (7) days before the Arrival Conference.

NOTE

NAVSEA drawings listed will be available FOR INSPECTION ONLY from the Coast Guard Port Engineer post-award. SFLC will not redistribute NAVSEA documents. Contractors can apply to NAVSEA headquarters directly for copies.

3.2 Fire watch requirements. The Contractor must refer to 3.3.1.3 (Fire watch requirements) of SFLC Std Spec 0000, in accomplishing the following task:

- Provide portable fire extinguishers for Coast Guard fire watch personnel. Coast Guard fire watch is in lieu of contractor personnel during the hours of 0800-1600, Monday through Friday, and limited to two Coast Guard fire watch personnel.

3.3 Preservation requirements. The Contractor must accomplish all preservation tasks, including touch-ups, in accordance with SFLC Std Spec 6310.

3.3.1 Brand name approval. Ensure that all contractor-furnished coatings are in accordance with SFLC Std Spec 6310, Appendix C (Authorized Coatings for Use on Cutters and Boats).

3.3.2 Coating colors and system color schemes. The Contractor must obtain a written KO authorization to deviate from any coatings required in SFLC Std Spec 6310 Appendix C before work.

3.3.3 In-process quality control measures. The Contractor must abide by all the safety, preservation, and quality control requirements specified in SFLC Std Spec 0000, paragraph 3.2.4.2 (In-process QC measures for "critical-coated surfaces").

3.3.3.1 Quality control requirements. The Contractor must abide by the following when performing preservation related inspections. The following measurements must be randomly spaced throughout for the purposes of providing a representation of the entire prepared or coated surface.

3.3.3.1.1 Surface profile measurements. One surface profile measurement must be taken for every 200 square feet for the first 1000 square feet; for each additional 500 square feet or less, one profile measurement must be taken. Profile measurements must be taken in accordance with SFLC Std Spec 6310, paragraph 3.1.8.3 (Surface profile measurements). A "measurement" for surface profile is defined as follows:

- ASTM D4417, Method B: One profile measurement is the average (mean) of 10 individual readings.
- ASTM D4417, Method C: One profile measurement is the average (mean) of 2 individual readings.

3.3.3.1.2 Soluble salt conductivity measurements. 5 conductivity measurements must be taken every 1000 square feet. For submerged (immersed) applications conductivity measurements must not exceed 30 microsiemens/cm. For non-submerged (non-immersed) applications conductivity measurements must not exceed 70 microsiemens/cm. If a conductivity check fails, clean the surface in accordance with SFLC Std Spec 6310, paragraph 3.1.8.5 (Soluble salt removal).

3.3.3.1.3 Coating thickness measurements. Three area measurements must be taken for the first 1000 square feet; for each additional 1000 square feet, perform an additional area measurement. A "measurement" for coating thickness is defined as follows:

- SSPC-PA 2 defines an area measurement as 5 separate spot measurements randomly spaced throughout a 100 square foot area.
- SSPC-PA 2 defines a spot measurement as 3 gage readings and each new gage reading the probe must be moved to a new location within a 1.5-inch diameter circle defining the spot.

3.4 Welding and brazing requirements. The Contractor must perform all welding and allied processes, and NDE in accordance with SFLC Std Spec 0740.

NOTE

NAVSEA approval is NOT required for welding procedures submitted but the procedures must be reviewed and shown to satisfy the requirements set forth in NAVSEA TP 1688, by a welding regulatory agency. The requirements for welding Strenx 900 are considered the same as those for welding HY-130.

3.5 Environmental protection requirements. The Contractor must adhere to the following environmental protection requirements in accordance with the SFLC Stand Spec 0000:

3.5.1 Contractor operated (non USCG) facilities. The Contractor must provide and maintain environmental protection as defined in SFLC Std Spec 0000 Appendix A, Requirements for Environmental Protection at Contractor Operated (Non USCG) Facilities, as applicable, during the performance of this availability. Contractor must plan for and provide environmental protective measures to control pollution that develops during normal practice, as well as plan for and provide environmental protective measures required to correct conditions that develop during the project. Contractor must comply with applicable Federal, state, and local laws, codes, ordinances, and regulations in their entirety. Any reference to a specific portion of a Federal, state, or local law, code, ordinance, or regulation in this or any other item must not be construed to mean that relief is provided from any other sections of the law, code, ordinance, or regulation.

3.5.2 Test and procedures. The Contractor is required to promptly conduct tests and procedures for the purpose of assessing whether operations are in compliance with applicable Environmental Laws. Analytical work must be done by qualified laboratories; and where required by law, the laboratories must be certified.

3.5.3 Regulatory notifications. The Contractor is responsible for all regulatory notification requirements in accordance with Federal, State and local regulations. In cases where the Coast Guard must also provide public notification, such as storm water permitting, the Contractor must coordinate with the Contracting Officer or COR, and if work is being performed at a USCG Facility, the local Facility Engineer or Engineering Officer. The Contractor must submit copies of all regulatory notifications to the Contracting Officer and the local Facility Engineer or Engineering Officer prior to commencement of work activities. Regulatory notifications must be provided for including but not limited to demolition, renovation, National Pollutant Discharge Elimination System

(NPDES) defined site work, and remediation of controlled substances such as asbestos, hazardous waste, and lead paint.

3.5.4 Environmental manager. The Contractor must appoint in writing an Environmental Manager for the project, who is responsible for coordinating Contractor compliance with Federal, State, local, and station environmental requirements. The Environmental Manager must ensure compliance with Hazardous Waste Program requirements, including hazardous waste handling, storage, manifesting, and disposal; implement the Contractors' Environmental Management Plan; ensure that all environmental permits are obtained, maintained, and closed out; ensure compliance with Storm Water Program Management requirements; ensure compliance with Hazardous Materials including storage, handling, and reporting requirements; as well as coordinate any remediation of regulated substances such as lead, asbestos, and polychlorinated biphenyl (PCB). This may be a collateral position; however the individual must be trained to accomplish the following duties; ensure waste segregation and storage compatibility requirements are met; inspect and manage Satellite Accumulation areas; ensure only authorized personnel add wastes to containers; ensure all Contractor personnel are trained in 40 CFR requirements and individual position requirements; coordinate removal of waste containers; and maintain the Environmental Records binder and required documentation, including environmental permits compliance and close-out.

3.5.5 HW disposal. Contractor must comply with SFLC Std Spec 0000 Appendix A, Requirements For Environmental Protection At Contractor Operated (Non USCG) Facilities for HW disposal.

3.6 Local Policy. The Contractor must refer to site (e.g., Base) Regulations and Instructions for details regarding local policies (e.g., crane services, parking, or facility usage).

3.7 SFLC Standard Specification approved changes. Approved updates to the 2022 SFLC Standard Specifications will appear here.

3.7.1 SFLC Standard Specification 5550: Replace paragraph 3.11.3 to state, "Material supporting imminent work shall be brought on the cutter and stored where the work is being performed. Material that appreciably contributes to fire load shall be removed at the end of each work shift when personnel are not present. Trash, debris, and packaging materials shall be promptly removed from the vessel at the end of each work shift and not allowed to accumulate." Advance the paragraph numbering of the Fire Prevention and Safety Inspection form to 3.11.4.

4. NOTES

4.1 QA inspection forms. QA inspection forms (QA-1 thru QA-5), required in SFLC Std Spec 6310 to be completed and submitted during preservation of "critical-coated surfaces", are provided at the end of this document.

USCGC FIR (WLB-225B) DOCKSIDE AVAILABILITY FY2026

QA-1 - QUALITY ASSURANCE INSPECTION FORM

(PRESERVATION CHECKLIST)

VESSEL NAME	HULL #	WORK ITEM #	WORK ITEM TITLE
LOCATION OF WORK (INCL. FRAME #'S)			**AREA (SQFT)**

	CHECKPOINT 1 – COATING SYSTEM COMPLIANCE
	Ensure all coatings are in compliance with SFLC Std Spec 6310, Appendix C.
CHECKPOINT 2 - PAINT STORAGE	
	Ensure all coatings are kept at a temperature of 65 to 85°F at all times, unless otherwise specified by the coating mfg.
CHECKPOINT 3 - AMBIENT CONDITIONS	
	Ensure surface and surrounding temperatures are each between 50 and 90°F for water-containing coatings, and 35 and 95°F for other coatings, unless otherwise specified by the coating manufacturer(s).
	Ensure maximum relative humidity (RH) is as follows, from surface preparations through final curing of topcoat: 50% for tanks, voids, and vent plenum; and 85% for all other areas, unless otherwise specified by manufacturer(s).
	Ensure surface temperature is at least 5°F above the dew point, unless otherwise specified by the coating mfg.
CHECKPOINT 4 - PRE-SURFACE PREPARATION	
	Remove surface contaminants (soluble salts, loose rust, mud, and marine growth) with low pressure fresh water wash down (maximum 5,000 psi). If oil and grease are present, perform solvent cleaning, as per SSPC SP-1.
	Verify equipment setup, blast media, and surface preparation methods match designated test coupon.
CHECKPOINT 5 - SURFACE PREPARATION	
	Verify environmental conditions (see CHECKPOINT 3).
	Ensure cleanliness of prepared surface is as per specification (i.e.: SSPC SP-11, SP-10, SP WJ-2…).
	Verify surface anchor profile using ASTM D4417-Methods B or C against SFLC Std Spec 6310. Conduct profile readings at a minimum of 5 locations for the first 1000-sqft area, and 2 locations for each succeeding 1000-sqft area.
	Measure soluble salt conductivity in accordance with SSPC-Guide 15. Conduct 5 measurements per each 1000-sqft area (max. threshold: 70 microsiemens/cm for non-submerged surfaces, 30 microsiemens/cm for submerged surfaces).
CHECKPOINT 6 - PRIMER COAT APPLICATION	
	Verify environmental conditions (see CHECKPOINT 3).
	Verify proper mixing and stand-in (induction) times.
	Ensure no paint is applied when the temperature is expected to drop to freezing before the paint has dried.
	Ensure surfaces are completely dry, unless otherwise allowed by the coating manufacturer(s).
	Verify wet film thickness (WFT) at random, to prevent under or over application. Verify final DFT.
	Brush out all runs, sags, drips, and puddles.
	Perform visual inspection for holidays and other defects.
CHECKPOINT 7 – STRIPE COAT APPLICATION	
	Verify environmental conditions (see CHECKPOINT 3).
	Ensure overcoating window is as per manufacturer's instructions.
	After primer coat (mist coat after inorganic zinc), brush-apply un-thinned coat of same primer paint over edges, weld seams, cut-outs, and areas of complex geometries @ 3-4 mils wet film thickness (WFT).
CHECKPOINT 8 – TOP COAT APPLICATION	
	Verify environmental conditions (see CHECKPOINT 3).
	Ensure overcoating window is as per manufacturer's instructions.
	Verify proper mixing and stand-in (induction) times, as applicable.
	Verify wet film thickness at random, to prevent under or over application.
	Brush out all runs, sags, drips, and puddles.
CHECKPOINT 9 – FINAL INSPECTION	
	Verify final system dry film thickness. Conduct 5 sets of 3 readings for each of the first 3 100-sqft areas, followed by 5 sets of 3 readings for each succeeding 1000-sqft area.
	Ensure that system cure is in accordance with manufacturer's recommendation for intended service.
	Ensure potable water tank exhaust ventilation is maintained continuously from and during coating application through final system cure, to exhaust all solvent to the atmosphere and to prevent solvent entrapment.
	For immersion coatings (including tank U/W body), record date and time of the following events: Final coat application: / ; Return to service or removal from environment controls: /
CHECKPOINT 10 – RECORD KEEPING	
	Complete, sign, and submit all provided QA Inspection Forms.

NAME OF QP-1/AMPP INSPECTOR	SIGNATURE	CERT. #	DATE / TIME
NAME OF CG REPRESENTATIVE	**SIGNATURE**	**UNIT**	**DATE/TIME**

QA-2 - QUALITY ASSURANCE INSPECTION FORM
(ENVIRONMENTAL READINGS)

VESSEL NAME	HULL #	WORK ITEM #	WORK ITEM TITLE

Use one sheet for each activity. Record conditions every four hours from before surface preparation to application of final coating system coat.

DATE & TIME	ACTIVITY (SURFACE PREPARATION, PRIMER COAT, BARRIER COAT, TOP COAT, ETC…)	LOCATION (FRAME & DECK, RELATION TO EQUIPMENT, ETC.)	TEMPERATURE				% REL. HUMID-ITY
			DEW PT.	SURFACE	AMBIENT	ΔT | DP - SURFACE |	

NAME OF QP-1/AMPP INSPECTOR	SIGNATURE	CERT. #	DATE / TIME
NAME OF CG REPRESENTATIVE	**SIGNATURE**	**UNIT**	**DATE/TIME**

QA-3a - QUALITY ASSURANCE INSPECTION FORM
(SURFACE PROFILE LOG FOR PROFILE MEASUREMENTS IAW ASTM D4417-METHOD-C)

VESSEL NAME	HULL #	WORK ITEM #	WORK ITEM TITLE
LOCATION OF WORK (FRAME REFERENCES)			**AREA (SQFT)**

SURFACE PREPARATION METHOD		PROFILE ACHIEVED (MILS)		
		MIN	MAX	MEAN
SSPC-SP-10/AMPP No. 2	☐			
SSPC-SP WJ-2/AMPP WJ-2	☐			
SSPC-SP-3	☐			
SSPC-SP-11	☐			
SSPC-SP-11 (inaccessible area)	☐			
Brush-blasting (non-metallic substrate)	☐			
ABRASIVE MANUFACTURER:		**ABRASIVE SIEVE SIZE:**		

PLACE SURFACE PROFILE REPLICA TAPES IN THE SPACES PROVIDED BELOW, TO SERVE AS PERMANENT QA RECORD. MAINTAIN A SEPARATE LOG FOR EACH LOCATION. WHEN AN AREA IS DIVIDED INTO SEPARATE SECTIONS, MAINTAIN A SEPARATE LOG FOR EACH SECTION.

Place Surface Profile Replica Tape Here	Place Surface Profile Replica Tape Here	Place Surface Profile Replica Tape Here
Reading (mils):	Reading (mils):	Reading (mils):
Place Surface Profile Replica Tape Here	Place Surface Profile Replica Tape Here	Place Surface Profile Replica Tape Here
Reading (mils):	Reading (mils):	Reading (mils):
Place Surface Profile Replica Tape Here	Place Surface Profile Replica Tape Here	Place Surface Profile Replica Tape Here
Reading (mils):	Reading (mils):	Reading (mils):
Place Surface Profile Replica Tape Here	Place Surface Profile Replica Tape Here	Place Surface Profile Replica Tape Here
Reading (mils):	Reading (mils):	Reading (mils):
Place Surface Profile Replica Tape Here	Place Surface Profile Replica Tape Here	Place Surface Profile Replica Tape Here
Reading (mils):	Reading (mils):	Reading (mils):
MEAN MIL READING (IAW ASTM D4417-METHOD C) FOR ABOVE 15 READINGS:		

NAME OF QP-1/AMPP INSPECTOR	SIGNATURE	CERT. #	DATE / TIME
NAME OF CG REPRESENTATIVE	**SIGNATURE**	**UNIT**	**DATE/TIME**

QA-3b - QUALITY ASSURANCE INSPECTION FORM
(SURFACE PROFILE LOG FOR PROFILE MEASUREMENTS IAW ASTM D4417-METHOD-B)

VESSEL NAME	HULL #	WORK ITEM #	WORK ITEM TITLE
LOCATION OF WORK (INCL. FRAME #'S)			**AREA (SQFT)**

SURFACE PREPARATION METHOD		PROFILE ACHIEVED (MILS)		
		MIN	MAX	MEAN
SSPC-SP-10/AMPP No. 2	☐			
SSPC-SP WJ-2/AMPP WJ-2	☐			
SSPC-SP-3	☐			
SSPC-SP-11	☐			
SSPC-SP-11 (inaccessible area)	☐			
Brush-blasting (non-metallic substrate)	☐			
ABRASIVE MANUFACTURER:		**ABRASIVE SIEVE SIZE:**		

RECORD MEASUREMENTS TAKEN IN THE SPACES PROVIDED BELOW, TO SERVE AS PERMANENT QA RECORD. MAINTAIN SEPARATE LOG FOR EACH LOCATION. WHEN AN AREA IS DIVIDED INTO SEPARATE SECTIONS, MAINTAIN A SEPARATE LOG FOR EACH SECTION.					
Reading (mils):					
Reading (mils):					
Reading (mils):					
Reading (mils):					
Reading (mils):					
Reading (mils):					
Reading (mils):					
Reading (mils):					
Reading (mils):					
Reading (mils):					
Mean Mils Reading (IAW ASTM D4417-Method B for above 10 readings (by column):					
Mean Reading (mils)					

NAME OF QP-1/AMPP INSPECTOR	SIGNATURE	CERT. #	DATE / TIME
NAME OF CG REPRESENTATIVE	**SIGNATURE**	**UNIT**	**DATE/TIME**

QA-4 - QUALITY ASSURANCE INSPECTION FORM
(SURFACE SOLUBLE SALT CONDUCTIVITY LOG)

VESSEL NAME	HULL #	WORK ITEM #	WORK ITEM TITLE
LOCATION OF WORK (INCL. FRAME #'S)			AREA (SQFT)

SOLUBLE SALT CONDUCTIVITY MEASUREMENTS IAW SSPC-GUIDE 15.		
DATE	TEST LOCATIONS	CONDUCTIVITY (MICROSIEMENS/CM)

NAME OF QP-1/AMPP INSPECTOR	SIGNATURE	CERT. #	DATE / TIME
NAME OF CG REPRESENTATIVE	SIGNATURE	UNIT	DATE/TIME

QA-5 - QUALITY ASSURANCE DATA FORM
(COATING THICKNESS)

(Use one sheet for each sequence)

VESSEL NAME	HULL #	WORK ITEM #	WORK ITEM TITLE

COATING MFG	PRODUCT NAME	BATCH #	INDUCTION TIME	COATING SYSTEM SEQUENCE (PRIMER/TOUCHUP/3RD COAT, ETC.)

DRY FILM THICKNESS (DFT) MEASUREMENTS IAW SSPC-PA 2.						
SPOT	1	2	3	4	5	AVERAGE VALUE
*BASE METAL READING (BMR)						
*Required, If Magnetic Pull-Off (Type I/Banana) Gauge Is Used.						

LOCATION (FRAME REFERENCE):								
SPOT	1	2	3	4	5	OVERALL AVG. DFT	ADJUSTMENTS	
1							AVG. BMR	DEVIATION
2								
3						BEFORE ADJUSTMENTS	AFTER ADJUSTMENTS	
AVG.								
LOCATION (FRAME REFERENCE):								
SPOT	1	2	3	4	5	OVERALL AVG. DFT	ADJUSTMENTS	
1							AVG. BMR	DEVIATION
2								
3						BEFORE ADJUSTMENTS	AFTER ADJUSTMENTS	
AVG.								
LOCATION (FRAME REFERENCE):								
SPOT	1	2	3	4	5	OVERALL AVG. DFT	ADJUSTMENTS	
1							AVG. BMR	DEVIATION
2								
3						BEFORE ADJUSTMENTS	AFTER ADJUSTMENTS	
AVG.								

APPLICATION METHOD (AIRLESS, CONVENTIONAL SPRAY, ROLLED)	AVERAGE DFT

NAME OF QP-1/AMPP INSPECTOR	SIGNATURE	CERT. #	DATE / TIME
NAME OF CG REPRESENTATIVE	SIGNATURE	UNIT	DATE/TIME

4.2 Tank and Void Assessment form.

SFLC-ESD-25	TANK AND VOID ASSESSMENT FORM
PRINT RESET	

GENERAL DATA	Note: Use SFLC-ESD-29 for Compartments other than Tanks & Voids.		
Inspector's Name:	Organization:	Contact Info:	
Cutter Name:	Cutter Class:	Hull:	
Tank:	Service:	Tank Area:	Gallons:
Solid Balast:	Access Compt:	Date:	Assessment Reason:

ACCESS DATA	
Manhole and cover condition:	Tank Penetration Condition:

VENT OVERFLOW DATA		
Present: ◯Yes ◯ No	Check Valve Installed: ◯Yes ◯No	Check Valve Operates Properly: ◯Yes ◯No

LADDER DATA		
NR of Ladder(s) Present: ◯Yes ◯No	Ladder Damaged: ◯Yes ◯No	Ladder Material:

TANK LEVEL INDICATOR (TLI) DATA		
TLI Present in Tank: ◯Yes ◯No	TLI Damaged: ◯Yes ◯No	TLI Type:

SOUNDING TUBE DATA	
Sounding Tube Present in Tank: ◯Yes ◯No	Sounding Tube Damaged: ◯Yes ◯No
Striker Plate Damaged (>50%): ◯Yes ◯No	

CATHODIC PROTECTION DATA		
Cathodic Protection in Tank: ◯Yes ◯No	Total Zincs:	Number of Zincs > 50% Depleted:

	1-6		Cleanliness & Housekeeping
Clean to light layer or residue		1-2 (G)	Comments:
Loose accumulation scale		3-4 (Y)	
Impending residue and sediments		5-6 (R)	

	%	1-6		Coating Systems
All Painted Surfaces			1-2 (G)	Comments:
			3-4 (Y)	
			5-6 (R)	

	%	1-6		Structural
Corrosion			1-2 (G)	Comments:
			3-4 (Y)	
			5-6 (R)	
Pitting & Grooving			1-2 (G)	Comments:
			3-4 (Y)	
			5-6 (R)	

Page 1 of 2 18MAR2015

SFLC-ESD-25	TANK AND VOID ASSESSMENT SHEET
PRINT	

Structural Integrity Data						
Estimated Total Linear Feet of Structure Requiring Repair:			Estimated Total Square Feet of Plating Requiring Repair:			
Cracks/ Fractures Present:	◯ Yes	◯ No	Buckling/Deflections/ Distortions Present:	◯ Yes	◯ No	
Holes Present:	◯ Yes	◯ No	Material Wastage Present:	◯ Yes	◯ No	
All Welds Intact:	◯ Yes	◯ No	Structural Evaluation Recommended:	◯ Yes	◯ No	

PHOTOGRAPHS

Pictures Taken (enter quantity):

Note: To add pictures to this form, Work Station must have Adobe Acrobat (not Reader) installed.
Add all photos and photo comments to a word document and save file. Open this form and click "Combine Files". Add the document with photos you've just saved and save as a new combined .pdf files.

Additional Comments:

Page 2 of 2 18MAR2015

WORK ITEM 1: Fire Prevention Requirements

1. SCOPE

1.1 Intent. This work item describes the requirements for the Contractor to minimize shipboard fire risk and to clarify the Contractors' role in fire prevention and response.

NOTE
This work item is not separately priced. Factor fire prevention and response costs into bid of affected work items.

1.2 Government-furnished property.

None.

2. REFERENCES

COAST GUARD DRAWINGS

None

COAST GUARD PUBLICATIONS

Surface Forces Logistics Center Standard Specification 0000 (SFLC Std Spec 0000), 2020, General Requirements

Surface Forces Logistics Center Standard Specification 5550 (SFLC Std Spec 5550), 2022, Fire Prevention and Response

OTHER REFERENCES

None

3. REQUIREMENTS

3.1 Fire Plan. The Contractor must develop and implement a written fire plan in accordance SFLC Std Spec 5550. The Contractors Fire Plan must address Fire Protection and Response specifics as required in this Work Item.

3.1.1 The availability's specific Fire Plan must always address the following:

- material condition and fire protection boundary obstruction mitigations
- inoperable fittings log

- fire alarms
- firefighting equipment disposition

3.1.2 The Fire Plan must also address the following:

- fire protection system status
- communication links
- temporary services
- power disconnects
- fire prevention and safety inspections

3.2 Fire Prevention Responsible Party. The Contractor must appoint a Fire Prevention Responsible Party (FPRP) who acts as the Contractor's Responsible Person for fire prevention concerns during the entire availability.

3.3 Fire Prevention and Response Conference. The Contractor must participate in the Fire Prevention and Response Conference as required in Std Spec 5550, paragraph 3.12. The participants must address the contents of SFLC Std Spec 5550, paragraph 3.12.1, as applicable.

3.4 Fire Responsibility Familiarization Tour and Initial Inspection. The Contractor must participate in the Fire Responsibility Familiarization Tour and Initial Inspection as required in Std Spec 5550, paragraphs 3.12.2 through 3.12.4.

3.5 Material Condition and Fire Protection Boundary Obstruction Mitigation Requirements. The Contractor must conform to all material condition and fire protection boundary obstruction mitigation requirements detailed in SFLC Std Spec 5550, paragraph 3.2.

3.6 Inoperable Fittings Log Requirements. The Contractor must conform to all inoperable fittings log requirements detailed in SFLC Std Spec 5550, paragraph 3.3.

3.7 Fire Prevention Service Particulars. The Contractor must conform to the below listed fire prevention service requirements, in accordance with SFLC Std Spec 5550.

TABLE 1 – FIRE PREVENTION SERVICE SELECTION

*SUB-PARAGRAPH	TITLE	Y/N
3.4	Fire prevention system status	Y
3.4.1	Temporary firefighting system proposal	Y
3.4.2	Emergent firefighting system inoperability approval and notification	Y
3.4.3	"Disabled equipment" signage for disabled initial responder equipment	Y
3.4.4	Firefighting system inoperability allowance for removed hazards	Y
3.4.5	Maintain sprinkling zone operability	Y
3.4.6 including all subparagraphs	Hazard mitigation for maintenance of fixed extinguishing systems	Y
3.4.7	Procedure implementation for enabling/disabling	Y

*SUB-PARAGRAPH	TITLE	Y/N
	fire suppression systems	
3.4.8	Portable water pumping requirement for vessels w/o installed capability	Y
3.4.9	Limitations on operation of major machinery while firefighting systems are offline	Y
3.4.10	Liquid fuel pumping requirement for operational permanent or temporary firefighting systems	Y
3.4.11	Mechanical AFFF equipment must be available to initial responders in compartments with risk of flammable/combustible liquid spillage	Y
3.4.12 including all subparagraphs	Portable fire extinguisher requirements	Y
3.4.13	Hose and reel protection	Y
3.4.14 including all subparagraphs	Drydock firefighting requirements	Y
3.4.15	Fire protection system status in Fire Plan	Y
3.5	Fire response related communication links in Fire Plan	Y
3.6	Fire response related temporary services in Fire Plan	Y
3.6.1	Minimize downtime of fixed extinguishing systems	Y
3.6.2 through 3.6.10	Firemain and related equipment requirements	Y
3.6.11	Permanent lighting requirements	Y
3.6.12 including all subparagraphs	Temporary lighting requirements	Y
3.6.13	Electrical power, firefighting water, and lighting source location and testing identified in Fire Plan	Y
3.7 including all subparagraphs	Fire alarm requirements	Y
3.8	Shore power manual disconnect locations identified in Fire Plan	Y
3.9	Other power manual disconnect locations identified in the Fire Plan	Y
3.10 including subparagraph	Vessel firefighting equipment placement and disposition info in Fire Plan	Y
3.11	Fire prevention and safety inspections in Fire Plan	Y
3.11.1	Initial and daily inspection requirements	Y
3.11.2	Additional details in fire inspection reports	Y

***Each sub-paragraph number relates directly to the identical sub-paragraph number in SFLC Std Spec 5550.**

3.5 Extended fire prevention services. If the performance period of the contract is extended by the KO, the contractor must continue to provide all fire prevention services as specified herein for the extension period.

4. NOTES

This section is not applicable to this work item.

WORK ITEM 2: Tanks, Potable Water, Clean and Inspect

1. SCOPE

1.1 Intent. This work item describes the requirements for the Contractor to clean and inspect the following tank(s):

TABLE 1 - TANKS

TYPE OF TANK	LOCATION	CAPACITY - 95% (GALLONS)	LOW SUCTION (GALLONS)
Potable Water	2-25-1-W	4,028	80
Potable Water	2-25-2-W	4,028	80

1.2 Government-furnished property.

None.

2. REFERENCES

COAST GUARD DRAWINGS

Coast Guard Drawing 225B WLB 601-001, Rev F, General Arrangement Inboard & Outboard Profiles

COAST GUARD PUBLICATIONS

Surface Forces Logistics Center Standard Specification 0000 (SFLC Std Spec 0000), 2022, General Requirements

OTHER REFERENCES

American National Standards Institute/NSF International (ANSI/NSF) 61, 2015, Drinking Water System Components - Health Effects

American National Standards Institute/American Water Works Association (ANSI/AWWA) C652, 2011, Disinfection of Water-Storage Facilities

3. REQUIREMENTS

3.1 General.

3.1.1 CIR.

None.

3.1.2 Tech Rep.

Not applicable.

3.1.3 Protective measures. The Contractor must furnish and install all protective measures in accordance with SFLC Std Spec 0000, paragraph 3.3.3 (Vessel component, space, and equipment protection).

3.1.4 Interferences. The Contractor must handle all interferences in accordance with SFLC Std Spec 0000, (Interferences). Known interferences include, but are not limited to the following:

- Fluid contents
- Piping
- RO system components
- Deck grating.

NOTE

Coast Guard personnel will operate all shipboard machinery and equipment.

3.2 Operational test, initial. Prior to commencement of work, the Contractor must witness Coast Guard personnel perform an initial operational test of the equipment listed below to demonstrate existing operational condition. Submit a CFR.

- TLI

3.3 Plug log. The Contractor must keep a written record of all plugs put in any tanks vents. A separate list must be kept for each tank being entered.

3.3.1 Ensure that all plugs are removed from each tank upon completion of work in the tank.

3.3.2 Ensure the plug log is available to the Coast Guard inspector when the inspector is performing his close-out inspection on each tank.

3.4 Tank content removal. The Contractor must remove and dispose of all fluids and/or residues in accordance with all applicable Federal, state, and local regulations. The Contractor must notify the Dockmaster prior to filling or draining the potable water tank(s), when this item is being executed in a

drydock availability. The Contractor must refer to Coast Guard Drawing 225B WLB 601-001 for guidance.

3.5 Tank cleaning. The Contractor must remove tank cover(s); clean tank interior surfaces free of all foreign materials, such as sediment, sludge and bacterial growth. Remove all persistent residues, taking care not to damage any tank coating system. Remove cleaning media and residues continuously from the tank during the washing process. Remove any residual wash media and wipe up residual moisture with clean lint-free cloths. Collect, contain, and dispose of all wash media, residues, and cleaning materials in accordance with all Federal, state, and local regulations.

3.6 Inspection. The Contractor must visually inspect all tank interior surfaces, including, but not limited to bulkheads, floor and overhead plating, structural members, manhole cover surfaces, fasteners and gasket seating surfaces. Complete the "Tank and Void Assessment Form" (found in the Work Item titled "General Requirements") and submit via CFR. Electronic PDF version of this form will be furnished by the COR upon request. Include the following, as applicable:

- Tank structural condition.
- Inaccessible areas, if any.
- Condition of tank coating, including measurements taken, percentage, location, and type of coating failure.
- Tank level indicator (TLI) and/or float switch condition (if applicable).
- Sounding tube and striker plate condition.
- Suction and discharge piping condition.
- Fastener material and condition.

3.7 Tank closing. The Contractor must notify the COR at least 24 hours prior to closing the tank(s) and ensure tank closure is accomplished in the presence of the Coast Guard Inspector. After satisfactory inspection by the Coast Guard Inspector, and completion of all authorized repairs, close tank manhole cover(s) with new gasket material conforming to ANSI/NSF 61. Renew all stud cotton grommets (as applicable) upon reinstallation of manhole cover(s).

3.7.1 The Contractor must renew up to 10% of nuts and washers.

3.8 Tank disinfecting. After all other work involving the potable water system and tank closing have been completed, the Contractor must disinfect and treat the affected potable water tank(s) and associated disturbed piping and components, as necessary, to meet or exceed the requirements of AWWA C652. After tank disinfecting, remove and dispose of all treated water in accordance with all Federal, state and local regulations. Ensure that no one enters the tanks once disinfection is completed. Submit CFR providing confirmation that disinfection of tank(s) and associated potable water system disturbed piping and components has been completed and certifying that all sampling and testing is negative for coliform organisms.

NOTE

Coast Guard personnel will operate all shipboard machinery and equipment.

3.9 Operational test, post repairs. After completion of work and in the presence of the Coast Guard Inspector, the Contractor must thoroughly test and demonstrate the equipment listed below to be in satisfactory operating condition. Submit a CFR.

- TLI

4. NOTES

This section is not applicable to this work item.

WORK ITEM 3: Hydraulically Operated Cargo Hatch, Inspect and Service

1. SCOPE

1.1 Intent. This work item describes the requirements for the Contractor to perform inspections and service for the hydraulically-operated cargo hatch.

1.2 Government-furnished property.

None.

2. REFERENCES

COAST GUARD DRAWINGS

Coast Guard Drawing 225B WLB 528-002, Rev D, Weather Deck Drains Diagram

Coast Guard Drawing 225B WLB 549-001, Rev C, Onboard Lubrication Requirements

Coast Guard Drawing 225B WLB 556-001, Rev F, Hydraulic System Diagram

Coast Guard Drawing 225B WLB 601-001, Rev M; General Arrangement Inboard and Outboard Profiles

COAST GUARD PUBLICATIONS

Coast Guard Technical Publication (TP) 3717, Jun 2003, Hydraulic Cargo Hatch

Surface Forces Logistics Center Standard Specification 0000 (SFLC Std Spec 0000), 2020, General Requirements

Surface Forces Logistics Center Standard Specification 0740 (SFLC Std Spec 0740), 2020, Welding and Allied Processes

Surface Forces Logistics Center Standard Specification 5000 (SFLC Std Spec 5000), 2020, Auxiliary Machine Systems

Surface Forces Logistics Center Standard Specification 6310 (SFLC Std Spec 6310), 2020, Requirements for Preservation of Ship Structures

OTHER REFERENCES

None

3. REQUIREMENTS

3.1 General.

3.1.1 CIR. The Contractor must submit a CIR for the inspections listed in the following paragraph(s):

- 3.2 (Tasks to be accomplished) – Task #1.

3.1.2 Tech Rep.

Not applicable.

3.1.3 Protective measures. The Contractor must furnish and install all protective measures in accordance with SFLC Std Spec 0000, paragraph 3.3.3 (Vessel component, space, and equipment protection).

3.1.4 Interferences. The Contractor must handle all interferences in accordance with SFLC Std Spec 0000, paragraph 3.3.5 (Interferences). Known interferences include, but are not limited to the below-listed:

- Electrical and hydraulic switches.
- Dogs.
- Toggles.
- Hydraulic cylinders.
- Hydraulic lines.
- Electrical cables.
- Hoses.
- Overhead insulation.

3.2 Tasks to be accomplished. The Contractor must perform the following tasks:

CAUTION

Do not paint gaskets or any moving parts, including dogs, nuts, wedges, spindles, yokes, packing, connecting rods and hinge pins.

CAUTION

For Task #2, failure to remove hinge interferences during hatch removal/reinstallation may result in damage to coaming and hinges. Protect hinges during hatch removal and reinstallation.

				ADDITION REQUIREMENTS	
#	**TASK TYPE**	**QTY**	**COMPONENT OR ASSEMBLY**	**APPENDIX AND PARA. FROM 5000_STD**	**OTHER**
1	Operate and Inspect	1	Cargo hatch assembly	3.2.1 (Operate and inspect)	1. Check hatch for proper operation of all indicators, switches, dogging un-dogging

				ADDITION REQUIREMENTS	
#	**TASK TYPE**	**QTY**	**COMPONENT OR ASSEMBLY**	**APPENDIX AND PARA. FROM 5000_STD**	**OTHER**
					and overall operation. 2. Check entire coaming and drains for signs or debris or clogging of drains. 3. Conduct a visual inspection of the hatch. Check all linkages. 4. Inspect both inner and outer knife-edges for proper height and evenness of wear. 5. Inspect entire hatch structure, for signs of paint wear and corrosion. 6. Inspect gasket channels for corrosion. 7. Take 10 UT measurements of gasket channel surfaces, in locations designated by the Coast Guard Inspector, in accordance with SFLC Std Spec 0740, Appendix C. 8. Inspect hydraulic hose condition. 9. Check condition of dogs and wedges. Submit A CIR.
2	Remove and reinstall	1	Cargo hatch assembly	N/A	Remove hatch, to facilitate inspections and service tasks, and reinstall hatch, upon completion of work. Coaming in way of hatch hinges may be an interference to hatch removal. Inspect hinge clearance prior to commencing unshipping operations and determine if modifications are required. Modify/remove as necessary and return to original configuration at hatch reinstallation. Failure to remove interferences may result in damage to coaming and hinges. Protect hinges during hatch removal and reinstallation.
3	NDE	1	Cargo hatch assembly	3.2.5 (NDE)	Components designated for NDE: All welds. Submit a CFR.
4	Service and Inspect	1	Hydraulic hatch lift cylinder	3.2.2 (Service and inspect)	Submit CFR
5	Renew	1	Cargo hatch gasket	N/A	See CG TP-3717. Conduct gasket compression test, upon installation. Submit CFR.
6	Preserve	1	Interior Hatch and Combing	3.2.4 (Preservation)	Submit CFR.
7	Groom And Lubricate	1	Cargo hatch assembly	3.2.6 (Groom and lubricate)	See Coast Guard Drawing 225B WLB 549-001.
8	Boundary Testing	1	Cargo hatch assembly	N/A	Accomplish a chalk test and water hose test, in accordance with SFLC Std Spec

				ADDITION REQUIREMENTS	
#	**TASK TYPE**	**QTY**	**COMPONENT OR ASSEMBLY**	**APPENDIX AND PARA. FROM 5000_STD**	**OTHER**
					0740, Appendix C. Adjust dogs in accordance with CG TP-3717. Submit a CFR.
9	Operational Testing – Post Repairs	1	Cargo hatch assembly	N/A	1. Raise and lower, dog and un-dog, the hatch three complete cycles. 2. Verify hatch operates in accordance with parameters specified in TP-3717 with no unusual noise or binding. Submit CFR.
10	Touch-Up Preservation	All	New and disturbed surfaces	N/A	Prepare and coat all new and disturbed exterior and interior surfaces to match existing adjacent surfaces, in accordance with SFLC Std Spec 6310, Appendix A (Cutter and Boat Exterior Painting Systems) and Appendix B (Cutter and Boat Interior Painting Systems), respectively, and as applicable.

4. NOTES

This section is not applicable to this work item.

WORK ITEM 4: Vent Ducts, Engine And Motor Room, All, Commercial Cleaning

1. SCOPE

1.1 Intent. This work item describes the requirements for the Contractor to clean and inspect the designated shipboard ventilation systems.

1.2 Government-furnished property.

None.

2. REFERENCES

COAST GUARD DRAWINGS

Coast Guard Drawing 225B WLB 512-001, Rev K, HVAC Diagram

Coast Guard Drawing 225B WLB 512-007, Rev B, HVAC A&D, Fr 66-92, Innerbttm & 1st Platform

Coast Guard Drawing 225 WLB 259-005, Rev C, Combustion Intake & Exhaust A&D Hull Block 940

COAST GUARD PUBLICATIONS

Surface Forces Logistics Center Standard Specification 0000 (SFLC Std Spec 0000), 2020, General Requirements

Surface Forces Logistics Center Standard Specification 5100 (SFLC Std Spec 5100), 2020, Clean Shipboard Ventilation Systems

Coast Guard Technical Publication (TP) 3796, Section A, Aug 2006, Galley Hood – Model NBDL-60 (13'-4")

OTHER REFERENCES

None

3. REQUIREMENTS

3.1 General.

3.1.1 CIR.

None.

3.1.2 Tech Rep.

Not applicable.

3.1.3 Protective measures. The Contractor must furnish and install all protective measures in accordance with SFLC Std Spec 0000, paragraph 3.3.3 (Vessel component, space, and equipment protection).

3.1.3.1 Install filter medium at the terminal ends of all supply vent ducting to prevent any residual foreign mater from blowing into the engine room spaces.

3.1.4 Interferences. The Contractor must handle all interferences in accordance with SFLC Std Spec 0000, paragraph 3.3.5 (Interferences). Known interferences include, but are not limited to the following:

- Ducting screens.
- Electric pre-heaters.
- Overhead sheathing/panels.
- Ventilation covers..

NOTE

Coast Guard personnel will operate all shipboard machinery and equipment.

3.2 Operational test, initial. Prior to commencement of work, the Contractor must witness Coast Guard personnel perform an initial operational test of the ventilation systems included in this work item, to demonstrate existing operational condition. Submit a CFR.

3.3 Cleaning requirements. The Contractor must clean and inspect the following ventilation systems, shown on Coast Guard Drawings 225B WLB 512-001, 225B WLB 512-007, and 225 WLB 259-005, in accordance with SFLC Std Spec 5100. Submit a CFR.

TABLE 1 – ENGINE ROOM

SYSTEM LOCATION	TYPE
4-66-0-E (MMR)	Exhaust
4-66-0-E (MMR)	Supply
4-82-0-E (AMR)	Exhaust
4-82-0-E (AMR)	Supply

3.3.1 The Contractor must clean the exhaust ventilation ducting up to and including the discharge of the engine room exhaust fans. The Contractor is not expected to clean the exhaust stack plenum area.

3.3.2 Disassemble the exhaust system as required to clean all sections of the exhaust system.

3.3.2.1 After cleaning, reassemble vent ducting using new gaskets and fasteners.

3.3.3 Prior to reassembling the vent systems, visually inspect the systems in the presence of the Coast Guard Inspector. Verify that the vent systems are clean and oil and build up free. The Contractor must use video probe equipment to allow viewing the internal surfaces of all vent ducting.

3.4 Notification. The Contractor must give written notification to the COR 48 hours before starting ventilation cleaning work.

NOTE

Coast Guard personnel will operate all shipboard machinery and equipment.

3.5 Operational test, post repairs. After completion of work, the Contractor must thoroughly test, in the presence of the Coast Guard Inspector and demonstrate the ventilation systems disturbed to be in satisfactory operating condition. Submit a CFR.

4. NOTES

This section is not applicable to this work item.

WORK ITEM 5: Vent Ducts, Galley and Pantry Room, All, Commercial Cleaning

1. SCOPE

1.1 Intent. This work item describes the requirements for the Contractor to clean and inspect the designated shipboard ventilation systems.

1.2 Government-furnished property.

None.

2. REFERENCES

COAST GUARD DRAWINGS

Coast Guard Drawing 225B WLB 512-001, Rev K, HVAC Diagram

Coast Guard Drawing 225B WLB 512-007, Rev B, HVAC A&D, Fr 66-92, Innerbttm & 1st Platform

Coast Guard Drawing 225 WLB 259-005, Rev C, Combustion Intake & Exhaust A&D Hull Block 940

COAST GUARD PUBLICATIONS

Surface Forces Logistics Center Standard Specification 0000 (SFLC Std Spec 0000), 2020, General Requirements

Surface Forces Logistics Center Standard Specification 5100 (SFLC Std Spec 5100), 2020, Clean Shipboard Ventilation Systems

Coast Guard Technical Publication (TP) 3796, Section A, Aug 2006, Galley Hood – Model NBDL-60 (13'-4")

OTHER REFERENCES

None

3. REQUIREMENTS

3.1 General.

3.1.1 CIR.

None.

3.1.2 Tech Rep.

Not applicable.

3.1.3 Protective measures. The Contractor must furnish and install all protective measures in accordance with SFLC Std Spec 0000, paragraph 3.3.3 (Vessel component, space, and equipment protection).

3.1.4 Interferences. The Contractor must handle all interferences in accordance with SFLC Std Spec 0000, paragraph 3.3.5 (Interferences). Known interferences include, but are not limited to the following:

- Ducting screens.
- Electric pre-heaters.
- Overhead sheathing/panels.
- Ventilation covers..

NOTE

Coast Guard personnel will operate all shipboard machinery and equipment.

3.2 Operational test, initial. Prior to commencement of work, the Contractor must witness Coast Guard Personnel perform an initial operational test of the ventilation systems included in this work item, to demonstrate existing operational condition. Submit a CFR.

NOTE

It is recommended that the Contractor conduct a ship check to verify dimensions in the table below.

3.3 Cleaning requirements. The Contractor must clean and inspect the following ventilation systems, shown on Coast Guard Drawings 225B WLB 512-001, 225B WLB 512-007, and 225 WLB 259-005, in accordance with SFLC Std Spec 5100. Submit a CFR.

TABLE – 1 SYSTEM LOCATION

SYSTEM LOCATION	TYPE
Gaylord Hood	Exhaust
Galley	Supply
1-57-1-Q (Galley)	Exhaust

3.4 Additional requirements. In addition to the above, the Contractor must accomplish the following:

3.4.1 Notification. Give written notification to the COR, 48 hours before starting ventilation cleaning work.

3.4.2 Additional protective covering. In addition to providing protective covering as specified in SFLC Std Spec 5100, subsection 3.1.3 (Protective measures), provide additional protective covering for all food preparation and serving surfaces in the immediate work area, as applicable, to prevent contamination.

NOTE

Coast Guard personnel will operate all shipboard machinery and equipment.

3.5 Operational test, post repairs. After completion of work, the Contractor must thoroughly test, in the presence of the Coast Guard Inspector and demonstrate the ventilation systems included in this work item to be in satisfactory operating condition. Submit a CFR.

4. NOTES

This section is not applicable to this work item.

WORK ITEM 6: Vent Ducts, Laundry Exhaust, Commercial Cleaning

1. SCOPE

1.1 Intent. This work item describes the requirements for the Contractor to clean and inspect the designated shipboard ventilation systems.

1.2 Government-furnished property.

None.

2. REFERENCES

COAST GUARD DRAWINGS

Coast Guard Drawing 225B WLB 512-001, Rev K, HVAC Diagram

Coast Guard Drawing 225B WLB 512-007, Rev B, HVAC A&D, Fr 66-92, Innerbttm & 1st Platform

Coast Guard Drawing 225 WLB 259-005, Rev C, Combustion Intake & Exhaust A&D Hull Block 940

COAST GUARD PUBLICATIONS

Surface Forces Logistics Center Standard Specification 0000 (SFLC Std Spec 0000), 2020, General Requirements

Surface Forces Logistics Center Standard Specification 5100 (SFLC Std Spec 5100), 2020, Clean Shipboard Ventilation Systems

Coast Guard Technical Publication (TP) 3796, Section A, Aug 2006, Galley Hood – Model NBDL-60 (13'-4")

OTHER REFERENCES

None

3. REQUIREMENTS

3.1 General.

3.1.1 CIR.

None.

3.1.2 Tech Rep.

Not applicable.

3.1.3 Protective measures. The Contractor must furnish and install all protective measures in accordance with SFLC Std Spec 0000, paragraph 3.3.3 (Vessel component, space, and equipment protection).

3.1.4 Interferences. The Contractor must handle all interferences in accordance with SFLC Std Spec 0000, paragraph 3.3.5 (Interferences). Known interferences include, but are not limited to the following:

- Ducting screens.
- Electric pre-heaters.
- Overhead sheathing/panels.
- Ventilation covers..

NOTE

Coast Guard personnel will operate all shipboard machinery and equipment.

3.2 Operational test, initial. Prior to commencement of work, the Contractor must witness Coast Guard Personnel perform an initial operational test of the ventilation systems included in this work item, to demonstrate existing operational condition. Submit a CFR.

3.3 Cleaning requirements. The Contractor must clean and inspect the following ventilation systems, shown on Coast Guard Drawings 225B WLB 512-001, 225B WLB 512-007, and 225 WLB 259-005, in accordance with SFLC Std Spec 5100. Submit a CFR.

TABLE 1 – SYSTEM LOCATIONS

SYSTEM LOCATION	TYPE
1-57-4-Q (Laundry)	Exhaust
1-106-2-Q (Laundry)	Exhaust

3.4 Notification. The Contractor must give written notification to the COR, 48 hours before starting ventilation cleaning work.

NOTE

Coast Guard personnel will operate all shipboard machinery and equipment.

3.5 Operational test, post repairs. After completion of work, the Contractor must thoroughly test, in the presence of the Coast Guard Inspector and demonstrate the ventilation systems included in this work item to be in satisfactory operating condition. Submit a CFR.

4. NOTES

This section is not applicable to this work item.

WORK ITEM 7: Vent Ducts, All Other, Commercial Cleaning

1. SCOPE

1.1 Intent. This work item describes the requirements for the Contractor to clean and inspect the designated shipboard ventilation systems.

1.2 Government-furnished property.

None.

2. REFERENCES

COAST GUARD DRAWINGS

Coast Guard Drawing 225B WLB 512-001, Rev K, HVAC Diagram

Coast Guard Drawing 225B WLB 512-007, Rev B, HVAC A&D, Fr 66-92, Innerbttm & 1st Platform

Coast Guard Drawing 225 WLB 259-005, Rev C, Combustion Intake & Exhaust A&D Hull Block 940

COAST GUARD PUBLICATIONS

Surface Forces Logistics Center Standard Specification 0000 (SFLC Std Spec 0000), 2020, General Requirements

Surface Forces Logistics Center Standard Specification 5100 (SFLC Std Spec 5100), 2020, Clean Shipboard Ventilation Systems

Coast Guard Technical Publication (TP) 3796, Section A, Aug 2006, Galley Hood – Model NBDL-60 (13'-4")

OTHER REFERENCES

None

3. REQUIREMENTS

3.1 General.

3.1.1 CIR.

None.

3.1.2 Tech Rep.

Not applicable.

3.1.3 Protective measures. The Contractor must furnish and install all protective measures in accordance with SFLC Std Spec 0000, paragraph 3.3.3 (Vessel component, space, and equipment protection).

3.1.4 Interferences. The Contractor must handle all interferences in accordance with SFLC Std Spec 0000, paragraph 3.3.5 (Interferences). Known interferences include, but are not limited to:

- Ducting screens.
- Electric pre-heaters.
- Overhead sheathing/panels.
- Ventilation covers.

NOTE

Coast Guard personnel will operate all shipboard machinery and equipment.

3.2 Operational test, initial. Prior to commencement of work, the Contractor must witness Coast Guard Personnel perform an initial operational test of the ventilation systems included in this work item, to demonstrate existing operational condition. Submit a CFR.

3.3 Cleaning requirements. The Contractor must clean and inspect the following ventilation systems, shown on Coast Guard Drawings 225B WLB 512-001, 225B WLB 512-007, and 225 WLB 259-005, in accordance with SFLC Std Spec 5100. Submit a CFR.

TABLE 1 – SYSTEM LOCATIONS

SYSTEM LOCATION	TYPE
Paint Locker	Exhaust
Paint Locker	Supply
Deck Berthing	Supply
Deck Berthing	Exhaust
Main Deck	Supply
Main Deck	Exhaust
01-Deck	Supply
01-Deck	Exhaust

3.4 Notification. The Contractor must give written notification to the COR, 48 hours before starting ventilation cleaning work.

NOTE

Coast Guard personnel will operate all shipboard machinery and equipment.

3.5 Operational test, post repairs. After completion of work, the Contractor must thoroughly test, in the presence of the Coast Guard Inspector and demonstrate the ventilation systems included in this work item to be in satisfactory operating condition. Submit a CFR.

4. NOTES

This section is not applicable to this work item.

WORK ITEM 8: Compressed Air Receivers and System Valves, All, Clean, Inspect, Hydro and Lift

1. SCOPE

1.1 Intent. The work item describes the requirements for the Contractor to clean, inspect, lift test and hydrostatically test the below designated air receivers and system valves:

TABLE 1: AIR RECEIVERS

SERVICE	DESIGNATION	LOCATION	QTY	OPERATING PRESSURE (psi)
Starting Air	SA-F-E2-1, SA-F-E2-2	4-82-0-E	2	250
Ship's Whistle	ALP-F-E3-1	03-61-0-D	1	125
Ship's Service	ALP-F-E4-1	2-87-0-E	1	125

TABLE 2: SYSTEM VALVES

TYPE	SIZE	DESIGNATION	QTY	SET PRESSURE (psi)	Location/SYSTEM
Relief	½"	ALP-V-V1-1	1	90	STERN TUBE
Relief	½"	ALP-V-V2-1	1	40	SEA CHEST BLOW DOWN
Relief	½"	ALP-V-V2-2	1	40	SEA CHEST BLOW DOWN
Relief	1"	ALP-V-V3-1	1	138	STERN THRUSTER/REDUCING STATION
Relief	1"	ALP-V-V3-2	1	138	STERN THRUSTER/SS RECEIVER
Relief	1"	ALP-V-V3-3	1	138	SHIPS WHISTLE
Relief	½"	ALP-V-V920-1	1	175	UPPER LEVEL MMR/CLUTCH
Relief	1 ½"	SA-V-V4A-1	1	185	NR 1 MDE

Relief	1 ½”	SA-V-V4A-2	1	185	NR 2 MDE
Relief	1 ¼”	SA-V-V10-1	1	275	START AIR NR 3 COMPRESSOR
Relief	1 ¼”	SA-V-V10-2	1	275	START AIR NR 2 COMPRESSOR
Relief	1 ¼”	SA-V-V10-3	1	275	START AIR NR 1 COMPRESSOR
Relief	½”	SA-V-V5-4	1	275	AMR/NR 1 RECEIVER
Relief	½”	SA-V-V5-5	1	275	AMR/NR 2 RECEIVER
Reducing	½”	ALP-V-V6-1	1	125-75	EMERGENCY SHAFT SEAL
Reducing	1”	SA-V-V7-1	1	250-125	AMR/START AIR - LP REDUCING STA
Reducing	1 ½”	SA-V-V8-1	1	250-165	NR 1 MDE PRESSURE REDUCING VLV
Reducing	1 ½”	SA-V-V8-2	1	250-165	NR 1 MDE PRESSURE REDUCING VLV
Reducing	½”	SA-V-V9-1	1	250-150	UPPER LEVEL MMR/CLUTCH

1.2 Government-furnished property.

None.

2. REFERENCES

COAST GUARD DRAWINGS

Coast Guard Drawing 225B WLB 551-001, Rev G, Compressed Air System Diagram

COAST GUARD PUBLICATIONS

Surface Forces Logistics Center Standard Specification 0000 (SFLC Std Spec 0000), 2022, General Requirements

Surface Forces Logistics Center Standard Specification 0740 (SFLC Std Spec 0740), 2022, Welding and Allied Processes

Surface Forces Logistics Center Standard Specification 6310 (SFLC Std Spec 6310), 2022, Requirements for Preservation of Ship Structures

OTHER REFERENCES

American Society of Mechanical Engineers (ASME) B16.34, 2017, Valves-Flanged, Threaded, and Welding End

American Society for Testing and Materials (ASTM) International F1508, 2016, Standard Specification for Angle Style, Pressure Relief Valves for Steam, Gas, and Liquid Services

Manufacturers Standardization Society of the Valve and Fittings Industry (MSS) SP-61, 2019 Edition, Pressure Testing Of Valves

Manufacturers Standardization Society of the Valve and Fittings Industry (MSS) SP-67, 2017 Edition, Butterfly Valves

Manufacturers Standardization Society of the Valve and Fittings Industry (MSS) SP-72, 2010 Edition, Ball Valves with Flanged or Butt-Welding Ends for General Service

Manufacturers' Standardization Society of the Valve and Fittings Industry (MSS) SP-80, 2019 Edition, Bronze Gate, Globe, Angle and Check Valves

3. REQUIREMENTS

3.1 General.

3.1.1 CIR. The Contractor must submit a CIR for the inspections listed in the following paragraph(s):

None.

3.1.2 Tech Rep.

Not applicable.

3.1.3 Protective measures. The Contractor must furnish and install all protective measures in accordance with SFLC Std Spec 0000, paragraph 3.3.3 (Vessel component, space, and equipment protection).

3.1.4 Interferences. The Contractor must handle all interferences in accordance with SFLC Std Spec 0000, paragraph 3.3.5 (Interferences). Known interferences include, but are not limited to the following:

- Piping system.

NOTE

Coast Guard personnel will operate all shipboard machinery and equipment.

3.1.5 Operational test - initial. Prior to commencement of work, the Contractor must witness Coast Guard personnel perform an initial operational test of the compressed air system, to demonstrate existing operational condition. Submit a CFR.

3.2 Air receiver cleaning and inspection. The Contractor must clean and inspect each designated air receiver in paragraph 1.1 (Intent) as follows.

3.2.1 Blowdown the air receivers and collect the blowdown (condensate) into a separate container for inspection.

3.2.2 Visually inspect the blowdown (condensate) under a bright white light for oil or particulate contamination. Clean and visually inspect the internal and external surfaces of the air receiver for signs of corrosion, pitting, and other damage. Submit a CFR.

3.3 Hydrostatic test. The Contractor must perform a hydrostatic test of the designated air receiver(s) in accordance with SFLC Std Spec 0740, Appendix C and manufacturer's recommended procedures. In the event a test pressure is not listed on the applicable drawing, test to 1-1/2 times the nominal operating pressure and hold for five minutes. Refer to Coast Guard Drawing 225B WLB-551-001 for guidance. Submit a CFR.

3.3.1 To hydrostatic test, isolate the air receiver by disconnecting all piping, relief valves, and pressure switches. Install pipe plugs/caps, to prevent backflow into compressors and other system components.

3.3.2 Hydrostatically test the air receiver(s) using clean fresh water. Ensure zero leakage from or permanent deformation of pressure-containing parts by repairing all leaks, deformations, and discrepancies.

3.3.3 Instruments and equipment that might be damaged by clean fresh water must be excluded from hydrostatic pressure test.

3.3.4 After testing, drain and thoroughly dry the air receivers with warm air. Dispose of testing fluids in accordance with all applicable Federal, state, and local regulations. Reconnect all disconnected piping and restore system. Renew any disturbed gaskets.

WARNING

Do not drain any fluids, including fresh water, into any space, bilge, or exterior location.

3.4 Contractor's option for valve renewal. The Contractor may, at no additional cost to the Government, opt to renew valves designated for inspection and testing if preferable for the Contractor. If the Contractor elects to renew valves, the Contractor must ensure the following:

- New valves are commercial-standard type valves, conforming to the applicable standard listed in Table 1(Valve Standards).
- New valves must be equivalent (including identical material) to the valve being renewed.

TABLE 1 - VALVE STANDARDS

VALVE TYPE	INDUSTRY STANDARD
Steel Valves	MSS SP-61
Butterfly Valve	MSS SP-67
Ball Valves, Flanged or Butt-Welded Ends	MSS SP-72
Bronze Gate, Globe, Angle and Check Valves	MSS SP-80
Angle Style. Pressure Relief Valves	ASTM F1508
All others	ASME B16.34

3.4.1 Visually inspect the piping and mounting arrangements; and submit a CFR detailing any required modifications to accommodate the new valve(s).

3.4.2 Provide original documentation to the COR certifying each valve has been satisfactorily shop-tested. Documentation must include the set pressure, date of inspection / test, and testing facility.

3.5 Valve inspection and testing. The Contractor must inspect and test each designated air system valve as follows. Refer to Coast Guard Drawing 225B WLB-551-001 for guidance.

3.5.1 Relief valves. Disassemble as required, and visually inspect all parts for defects and deterioration. Submit a CFR.

3.5.1.1 Perform a lifting test on each relief valve in accordance with manufacturer's recommendations and ASME PTC 25. Ensure that each valve seats cleanly after pressure relief (without simmering), and with no allowable leakage.

3.5.1.2 Adjust the relief pressure on the designated relief valve as necessary to obtain the specified lifting pressure. After adjustment, perform a final check to confirm each relief valve's lifting pressure in the presence of the Coast Guard Inspector. After successful confirmation, install the relief valves. Renew all O-rings and gaskets. Submit a CFR.

3.6 Valve reinstallation/installation. Upon completion of all authorized work, the Contractor must accomplish the following:

- Remove and dispose of all blank flanges and associated gaskets.
- Reinstall/install all overhauled and new valves with new gaskets.
- Renew all missing or damaged valve label plates.
- Renew all bolting hardware.

3.7 Touch-up preservation, general. The Contractor must prepare and coat all new and disturbed surfaces to match existing adjacent surfaces in accordance with SFLC Std Spec 6310, paragraph 3.1.13 (Touch-ups and minor coating repairs.)

3.8 Data plates- valve. The Contractor must affix an anodized aluminum test data plate with lock wire to each valve. The data plate must be engraved with ¼-inch high letters, stating the following:

- Valve number / designation
- Set pressure (if applicable)
- Date of inspection / test.

3.9 Documentation. The Contractor must provide documentation to the Coast Guard Inspector certifying each valve tested. Documentation must include the valve number / designation, set pressure, date of inspection / test, and testing facility.

NOTE

Coast Guard personnel will operate all shipboard machinery and equipment.

3.10 Operational test – post repairs. After completion of work, the Contractor must thoroughly test, in the presence of the Coast Guard Inspector and demonstrate the compressed air system to be in satisfactory operating condition. Submit a CFR.

3.11 Surface preservation. The Contractor must prepare and coat the receiver exterior surfaces, using the system specified for "Machinery, Operating Temperatures Under 200 ºF" in SFLC Std Spec 6310, Appendix B (Cutter and Boat Interior Painting Systems). Select finish/top coat color to match previous paint scheme.

3.12 Data plates- air receiver. The Contractor must affix an anodized aluminum test data plate with epoxy resin cement to each air receiver. The data plate must be engraved with ¼-inch high letters, stating the following:

- Receiver name / number.
- Hydrostatic test pressure (if applicable).
- Date of inspection / test.
- Testing facility.

3.13 Documentation. The Contractor must provide documentation to the Coast Guard Inspector certifying each air receiver tested. Documentation must include the receiver name / number, method of testing, hydrostatic test pressure (if applicable), date of inspection / test, and testing facility.

4. NOTES

4.1 Air receiver definition. An air receiver is a pressure vessel for the storage of air at 600 psig and below.

WORK ITEM 9: Hull Fittings (Weight Handling Rigging Hardware), Inspect and Test

1. SCOPE

1.1 Intent. This work item describes the requirements for the Contractor to inspect and test designated hull fittings, listed in Table 1.

TABLE 1 - DESIGNATED ATON HULL FITTINGS

QTY	DESCRIPTION	LOCATION
4	Pad Eye and D-Ring, Flush Deck (CGDR50T01)	Buoy Deck, 20'-9" Off CL, P/S
10	Pad Eye and D-Ring, Flush Deck (CGDR50T01)	Buoy Deck, 19' Off CL, P/S
2	Pad Eye and D-Ring, Flush Deck (CGDR50T01)	Buoy Deck, Frame 37, P/S
14	Pad Eye and D-Ring, Flush Deck (CGDR50T01)	Buoy Deck, 15' Off CL, P/S
2	Pad Eye and D-Ring, Flush Deck (CGDR50T01)	Buoy Deck, Frame 54, P/S
16	Pad Eye and D-Ring, Flush Deck (CGDR50T01)	Buoy Deck, 108" Off CL, P/S
2	Pad Eye and D-Ring, Flush Deck (CGDR50T01)	Buoy Deck, Frame 52, P/S
8	Pad Eye and D-Ring, Flush Deck (CGDR50T01)	Buoy Deck, 36" Off CL, P/S
8	Pad Eye, Flush Deck (S-A S299)	Buoy Deck, 36" Off CL, P/S
10	Pad Eye, Flush Deck (S-A S299)	Cargo Hold, Frame 31, P/S
10	Pad Eye, Flush Deck (S-A S299)	Cargo Hold, Frame 33, P/S
10	Pad Eye, Flush Deck (S-A S299)	Cargo Hold, Frame 35, P/S
9	Pad Eye, Flush Deck (S-A S299)	Cargo Hold, Frame 37, P/S
36	D-Ring w/ Hold Down Strap (Austin 982-0046)	Cargo Hold, Bulkheads
6	Pad Eye, Flush Deck (S-A S299)	SORS Hold, Frame 41, P/S
6	Pad Eye, Flush Deck (S-A S299)	SORS Hold, Frame 43, P/S

6	Pad Eye, Flush Deck (S-A S299)	SORS Hold, Frame 45, P/S
6	Pad Eye, Flush Deck (S-A S299)	SORS Hold, Frame 47, P/S

1.2 Government-furnished property.

None.

2. REFERENCES

COAST GUARD DRAWINGS

Coast Guard Drawing 225B WLB 573-11, Rev G, ATON Tie Downs

Coast Guard Drawing 225B WLB 672-001, Rev C, Storerooms, Cargo Stowage and Ship Store Arrangement and Details

COAST GUARD PUBLICATIONS

Surface Forces Logistics Center Standard Specification 0000 (SFLC Std Spec 0000), 2022, General Requirements

Surface Forces Logistics Center Standard Specification 5000 (SFLC Std Spec 5000), 2022, Auxiliary Machine Systems

Surface Forces Logistics Center Standard Specification 6310 (SFLC Std Spec 6310), 2022, Requirements for Preservation of Ship Structures

OTHER REFERENCES

None

3. REQUIREMENTS

3.1 General.

3.1.1 CIR.

None.

3.1.2 Tech Rep.

Not applicable.

3.1.3 Protective measures. The Contractor shall furnish and install all protective coverings to seal off and protect all non-affected vessel's components, equipment, and spaces near the work area against contamination during the performance of work. Upon completion of work, the Contractor shall remove all installed protective measures, inspect for the presence of contamination, and return all contaminated

equipment, components, and spaces to original condition of cleanliness.

3.1.4 Interferences. The Contractor shall handle all interferences in accordance with SFLC Std Spec 0000, paragraph 3.3.5 (Interferences).

3.2 Inspection and test particulars. The Contractor shall accomplish the following for each hull fitting designated in paragraph 1.1, using Coast Guard Drawings 225B WLB 573-11 and 225 WLB 672-001, as guidance., and submit a CFR:

3.2.1 Visual inspection. Visually inspect all fittings for excessive damage, wear, corrosion, distortion, elongation of holes, gouges, pits, and cracks.

3.2.2 Measurements. Perform below measurement tasks and record percent wastage. Be aware that a 10% reduction in the original dimensions shall be cause for removal from service.

3.2.2.1 D-Ring. Using a suitable micrometer, measure the diameter (measurement A) at 90-degrees to the horizontal (top dead center). See Table 2 and the sketches provided in this work item as guidance, as applicable.

3.2.2.2 Flush deck tie-downs. Using a suitable micrometer, measure the diameter (measurement A) at center of bar of the S301 and S299 fittings. See Table 2 and the sketches provided in this work item as guidance, as applicable.

TABLE 2 - HULL FITTING MEASUREMENTS

MANUFACTURER	MODEL/MANUFAC. PART NUMBER		RING/BAR DIAMETER (MEASUREMENT A) (INCHES)
	DESIGNATOR	STRAP LENGTH (MEASUREMENT D) (INCHES)	
US Coast Guard	CGDR50T01	5.13	1.00
Schoellhorn-Albrecht	S113-50 (Generation 1)	5.0	1.00*
	S113-50 (Generation 2)	4.00	1.08
	S113-50 (Generation 3)	5.13	1.00
	S301		1.5
	S299		1.0
Peck and Hale	F654		0.91
Peck and Hale	F187	2.38	0.50
Austin Hardware and Supply	982-0046		0.625

***D-Ring has a tapered cross section. Measurement is only valid in the vertical. See Sketch 1.**

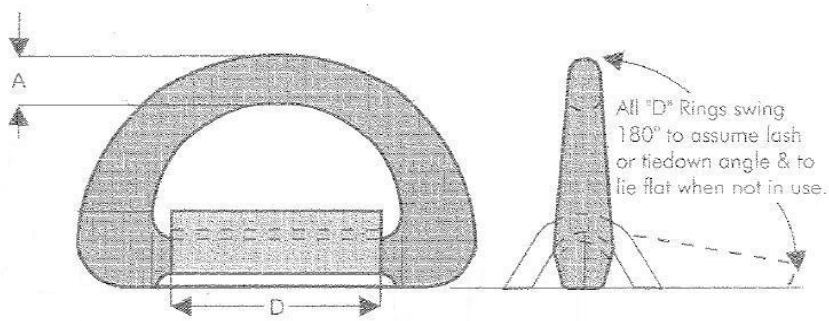

Sketch 1. Schoellhorn-Albrecht S113-50 (Generation 1) D-Ring and Strap.

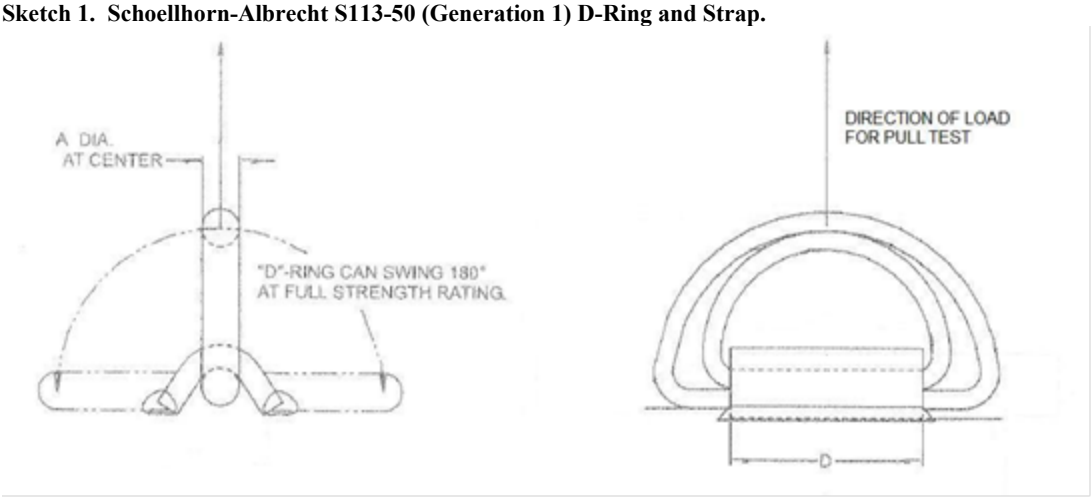

Sketch 2. Schoellhorn-Albrecht S113-50 (Generation 2 and 3) & Coast Guard CGDR50T01 D-Ring & Strap

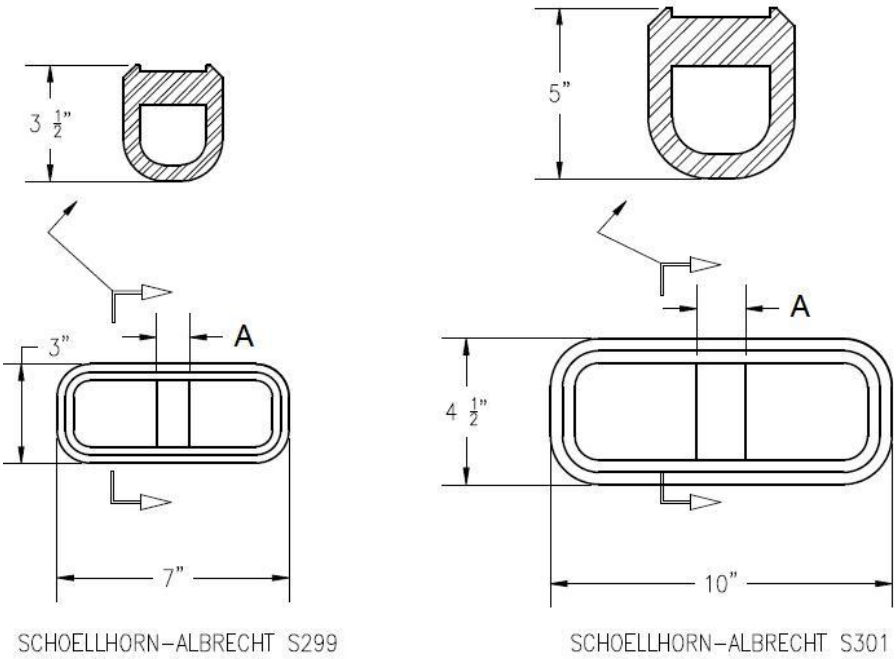

Sketch 3. Schoellhorn-Albrecht S299 and S301 Flush Deck Tie Downs.

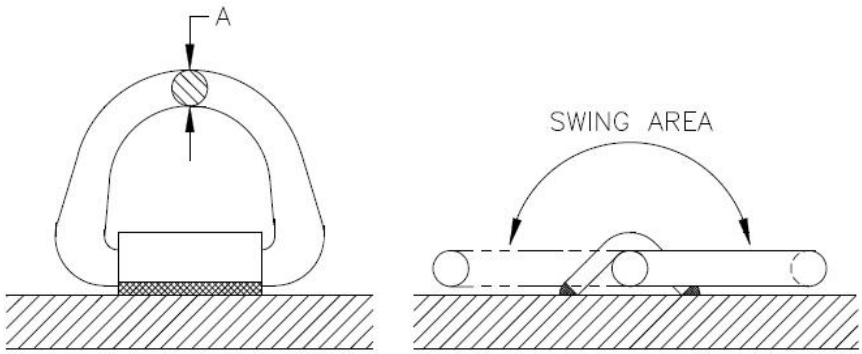

Sketch 4. Peck and Hale F187 D-Ring and Strap.

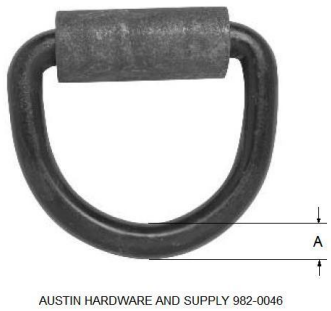

Sketch 5. Austin Hardware and Supply 982-0046 Heavy Duty Tie Down Rings with Clip.

3.2.3 Pull-test. Pull test all pad eyes and tie-downs in accordance with paragraph 3.2.7 (Pull test) of SFLC Std Spec 5000 , using Coast Guard Drawings 225B WLB 573-11 and 225 WLB 672-001, as guidance..

3.3 Touch-up preservation, general. The Contractor shall prepare and coat all new and disturbed exterior and interior surfaces, as applicable, to match existing adjacent surfaces in accordance with SFLC Std Spec 6310, paragraph 3.1.13 (Touch-ups and minor coating repairs.)

4. NOTES

This section is not applicable to this work item.

WORK ITEM 10: Hydraulic Chain Stoppers, Inspect And Service

1. SCOPE

1.1 Intent. This work item describes the requirements for the Contractor to inspect and service the Marinete Marine Corp. Model 573-009 Rising Sheave Chain Stoppers (RSCS).

1.2 Government-furnished property.

MTI	ITEM DESCRIPTION	NSN/PN	QTY	ESTIMATED COST ($/UNIT)
N	Repair Kit, HYD Chain Stopper Rising Sheave (for Para. 3.2, Tasks #2 and #3)	NSN: 2040-01-483-3947	2 ea.	2,631.46
N	Cylinder, Actuating Linear	NSN: 3040-01-483-3373	4 ea.	1,777.71

2. REFERENCES

COAST GUARD DRAWINGS

Coast Guard Drawing 225B WLB 573-009, Rev E, Bi-Dir Ch Stopper With Retractable Roller Stopper

Coast Guard Drawing 225B WLB 573-012, Rev -, Rising Sheave Chain Stopper Ripout Incidental to Upgrade

Coast Guard Drawing 225B WLB 573-013, Rev B, Rising Sheave Chain Stopper Mechanical Mods Incidental to Upgrade

Coast Guard Drawing 225B WLB 573-014, Rev -, Rising Sheave Chain Stopper Hydraulic Mods Incidental to Upgrade

COAST GUARD PUBLICATIONS

Coast Guard Technical Publication (TP) 3750, SWBS 573-A, Dec 2012, Rising Sheave Chain Stopper

Surface Forces Logistics Center Standard Specification 0000 (SFLC Std Spec 0000), 2014, General Requirements

Surface Forces Logistics Center Standard Specification 5000 (SFLC Std Spec 5000), 2014, Auxiliary Machine Systems

OTHER REFERENCES

None

3. REQUIREMENTS

3.1 General.

3.1.1 CIR. The Contractor shall submit a CIR for the inspections listed in the following task(s) in Table 1:

- Task #1.
- Task #2.
- Task #3.
- Task #4.

3.1.2 Tech Rep.

Not applicable.

3.1.3 Protective measures, general. The Contractor shall furnish and install all protective coverings to seal off and protect all non-affected vessel's components, equipment, and spaces near the work area against contamination during the performance of work. Upon completion of work, the Contractor shall remove all installed protective measures, inspect for the presence of contamination, and return all contaminated equipment, components, and spaces to original condition of cleanliness.

3.1.3.1 Protective measures, hydraulic system(s). Maintain existing hydraulic system cleanliness and take all necessary precautions to prevent the introduction of contaminants into the hydraulic system. Immediately after disconnecting or removing components from the hydraulic system, seal all openings to the rest of the system using caps for externally threaded connection points, bolt-on blanks, or taped-on discs/covers made of durable plastic or sheet-metal that is no less than 1/16-inch thick.

NOTE

Be aware that plastic bags may be used only when arrangement or configuration prevents the use of the other sealing methods specified above.

3.1.4 Interferences. The Contractor shall handle all interferences in accordance with SFLC Std Spec 0000, paragraph 3.3.5 (Interferences).

3.2 Inspection and repair tasks. The Contractor shall refer to Coast Guard Drawing 225B WLB 573-009 and TP-3750 as guidance. Perform all work in Table 1 below accordance with SFLC Std Spec 5000.

TABLE 1 - TASKS

				ADDITION REQUIREMENTS	
#	**TASK TYPE (SFLC STD SPEC 5000 PARA. REF.)**	**QTY**	**COMPONENT OR ASSEMBLY**	**APPENDIX AND PARA. FROM SFLC STD SPEC 5000**	**OTHER**
1	Operate and Inspect	2	Hydraulic Chain Stopper Assembly	3.2.1 (Operate and Inspect)	Additional inspections: 1. Check the hydraulic stopper mechanical foundation and all mounting hardware. 2. Inspect hydraulic hoses, ensuring that hose tags match hose log installation dates. 3. Verify the relief valve; adjust settings to 2150 PSI. 4. Visually inspect the seal gland; check for signs of water intrusion. 5. Visually inspect the stopper roller. 6. Verify proper speed of raise and lower (3 - 6 seconds each way). 7. Submit a CIR.
2	Disassemble and Inspect	2	Directional Control Valve Assembly	C2.4 (Valves and manifolds)	Submit a CIR.
3	Disassemble and Inspect	2	Rising Sheave Assembly (Sheave Pin Assembly)	3.2.3 (Disassemble and Inspect)	1. Renew all fasteners exposed to weather. 2. Lubricate in accordance with references. 3. Reassemble with provided GFE. 4. Submit a CIR.
4	Disassemble and Inspect	All	Hydraulic Cylinder	3.2.3 (Disassemble and Inspect)	Submit a CIR.
5	NDE	2	Hydraulic Chain Stopper Assembly and Machinery Foundation	3.2.5 (NDE)	Areas to NDE: 1. Entire stopper structure and all weld joints attaching chain stoppers to deck. 2. Foundation of the hydraulic rams and holdback blocks. 3. Submit a CFR.
6	Preserve	2	Hydraulic Chain Stopper	3.2.4 (Preservation)	Finish coat color: 1. Chain stopper: Black (17038)

				ADDITION REQUIREMENTS	
#	**TASK TYPE (SFLC STD SPEC 5000 PARA. REF.)**	**QTY**	**COMPONENT OR ASSEMBLY**	**APPENDIX AND PARA. FROM SFLC STD SPEC 5000**	**OTHER**
			Assembly, including Foundation and Chain Stopper Pockets.		2. Foundation: Gray (16099).
7	Groom and Lubricate	2	Hydraulic Chain Stopper Assembly	3.2.6 (Groom and lubricate)	
8	Final Test	2	Hydraulic Chain Stopper Assembly	B2.2 (Hydraulic chain stoppers)	Operational Load Test Weight: 16,500 (+0 -825) pounds Submit a CFR.
9	Fabricate and Install	2	Label Plate	B2.9 (Label plates)	Weight: 16,500 (+0 -825) pounds

3.3 Special requirements for various components. If a Change Request has been authorized for additional work on any of the components listed in Table 2 below, the Contractor shall refer to the corresponding Appendix or paragraph of SFLC Std Spec 5000.

TABLE 2 – SPECIAL REQUIREMENTS

COMPONENT	APPENDIX & PARAGRAPH IN SFLC STD SPEC 5000
Fluids	C2.1
Hose assemblies	C2.2
Piping and tubing	C2.3
Valves and manifolds	C2.4
Gages	C2.5
Gas charged accumulators	C2.6
Heat exchangers and fluid coolers	C2.7
Systems	C2.8
Fastener assemblies	D2.1
Wire rope assemblies	D2.2
Brakes and clutches	D2.3
Open gearing and gear reducers	D2.4

4. NOTES

This section is not applicable to this work item.

WORK ITEM 11: Crossdeck Winches, Inspect and Service

1. SCOPE

1.1 Intent. This work item describes the requirements for the Contractor to inspect and service the crossdeck winch assemblies and flag block assemblies, listed in Table 1.

TABLE 1 - EQUIPMENT

EQUIPMENT	LOCATION
Crossdeck Winch (PFW) – Model BMD-471L	Port Fwd
Crossdeck Winch (SFW) – Model BMD-471R	Stbs Fwd
Crossdeck Winch (PAW) – Model BMD-471R	Port Aft
Crossdeck Winch (SAW) – Model BMD-471L	Stbd Aft
Flag Block – Model -420	Port Fwd
Flag Block – Model -420	Stbd Fwd

1.2 Government-furnished property.

MTI	ITEM DESCRIPTION	NSN/PN	QTY	ESTIMATED COST ($/UNIT)
N	Hand Pump SS	NSN: 4320-01-517-1444	1 ea	1,499.66
N	Pressure Gauge - Model BMD-471	NSN: 6685-01-437-2519	4 ea	43.79
N	Wire Rope Assembly	NSN: 4010-01-643-2077	4 ea	900.00
N	Hydraulic Brake Repair Kit - Model BMD-471	NSN: 3950-01-526-9090	4 ea.	913.00
N	Counterbalance Valve - Model BMD-471	NSN: 4810-01-353-0586	4 ea.	150.00
N	Shuttle Valve - Model BMD-471	NSN: 4820-01-317-2748	4 ea.	35.00
N	Hydraulic Motor Seal Kit - Model BMD-471	NSN: 5330-01-475-4566	8 ea.	84.00
N	Clutch Shoe - Model BMD-471	NSN: 4910-01-475-4125	4 ea.	56.90
N	Drum Bushing - Model BMD-471	NSN: 3950-01-631-0884	8 ea.	272.00
N	Shaft Bushing - Model BMD-471	NSN: 3950-01-631-0771	4 ea.	298.00
N	Gearbox Seal Kit (For Winch Gearbox Assemblies) - Model BMD-471	NIIN: XFC343225 PN: YMD-8194-R	4 ea.	70.00
N	Control Station Repair Parts. Kit	NSN: 6110-01-644-9898	4 ea.	438.00

N	Flag Block Pivot Bearing	NSN: 3110-01-644-9905	4 ea.	675.00
N	Flag Block Bearing Cup, Sheave	NSN: 3110-01-644-9670	4 ea.	231.00
N	Flag Block Bearing Cone, Sheave	NSN: 3110-01-013-4036	4 ea.	182.00
N	Seal	NSN: 5330-01-287-2826	4 ea.	104.00
N	Manifold Repair Kit	PN: YMD-8192-R	4 ea.	551.00

****New or refurbished equipment that the Government may provide for installation in place of existing equipment.**

2. REFERENCES

COAST GUARD DRAWINGS

Coast Guard Drawing FL-1702-11, Rev -, Inspection of Sheaves

Coast Guard Drawing 225B-WLB 549-1, Rev -, Onboard Lubrication Requirements

Coast Guard Drawing 225B-WLB 556-1, Rev B, Hydraulic System Diagram

Coast Guard Drawing 225B-WLB 573-1, Rev -, Buoy Handling System Arrangement

Coast Guard Drawing 225B-WLB 573-2, Rev -, Weight Handling System Arrangement

COAST GUARD PUBLICATIONS

Coast Guard Technical Publication (TP) 3558, Apr 2008, Manufacturer's Instruction Book-SWBS Group(s) 573, Section B, Cross Deck Winch – Model BMD-471

Surface Forces Logistics Center Standard Specification 0000 (SFLC Std Spec 0000), 2022, General Requirements

Surface Forces Logistics Center Standard Specification 5000 (SFLC Std Spec 5000), 2022, Auxiliary Machine Systems

OTHER REFERENCES

None

3. REQUIREMENTS

3.1 General.

3.1.1 CIR. The Contractor must submit a CIR. for the following inspections listed in Table 2:

- Tasks #1.
- Task #2.
- Task #3.
- Task #4.
- Task #6.
- Task #7.
- Task #8.

- Task #9.
- Task #11.
- Task #12.
- Task #17.

3.1.2 Tech Rep.

Not applicable.

3.1.3 Protective measures. The Contractor must furnish and install all protective measures in accordance with SFLC Std Spec 0000, paragraph 3.3.3 (Vessel component, space, and equipment protection).

3.1.3.1 Protective measures, hydraulic system(s). Maintain existing hydraulic system cleanliness and take all necessary precautions to prevent the introduction of contaminants into the hydraulic system. Immediately after disconnecting or removing components from the hydraulic system, seal all openings to the rest of the system using caps for externally threaded connection points, bolt-on blanks, or taped-on discs/covers made of durable plastic or sheet-metal that is no less than 1/16-inch thick.

NOTE

Be aware that plastic bags may be used only when arrangement or configuration prevents the use of the other sealing methods specified above.

3.1.4 Interferences. The Contractor must handle all interferences in accordance with SFLC Std Spec 0000, paragraph 3.3.5 (Interferences).

3.2 Brake lining. The Contractor must be aware that the brake lining contains asbestos. Handle and dispose of the friction disks, in accordance with all applicable federal, state, and local regulations.

3.3 Contractor-furnished parts. The Contractor must furnish and renew all snap rings, bearings, thrust buttons, seals, o-rings, gaskets, seal washers, keys, shims, lockwashers, dowel pins, thrust washers, cotter pins, rope clamp, foundation bolts and nuts, as applicable, in accordance CG TP 3558, SWBS 573, Sections A and B.

3.4 Tasks. The Contractor must perform the tasks designated in Table 2, using SFLC Std Spec 5000, Coast Guard Drawings 225B-WLB 549-1, 225B-WLB 556-1, 225B-WLB 573-1, 225B-WLB 573-2, and CG TP 3558, SWBS 573, Sections A and B as guidance.

TABLE 2 – RECURRING TASKS

#	TASK TYPE (SFLC STD SPEC 5000 PARA. REF.)	QTY	COMPONENT OR ASSEMBLY	APPENDIX AND PARA. FROM SFLC STD SPEC 5000	OTHER
1	Operate and Inspect	4	Crossdeck Winch Assembly	3.2.1 (Operate and Inspect)	Submit a CIR.
2	Disassemble and Inspect	4	Crossdeck Winch Assembly	3.2.3 (Disassemble and Inspect)	Winch Main Drum Shaft Assembly, Clutch Assembly, And Warping Head Assembly

#	TASK TYPE (SFLC STD SPEC 5000 PARA. REF.)	QTY	COMPONENT OR ASSEMBLY	APPENDIX AND PARA. FROM SFLC STD SPEC 5000	OTHER
					Submit a CIR.
3	Disassemble and Inspect	4	Hydraulic Brake Assembly	3.2.3 (Disassemble and Inspect), D2.3 (Brakes and clutches)	Submit a CIR. GFP.
4	Disassemble and Inspect	4	Gear Box Assembly	3.2.3 (Disassemble and Inspect)	Renew GFP seals, Flush the gear box and renew oil. Submit a CIR.
5	Renew	4	Hydraulic Cartridge Valve Assemblies	C2.4 (Valves and manifolds)	GFP Counter balance valve GFP Needle valve GFP Shuttle valve
6	Disassemble and Inspect	4	Winch Hydraulic Motor Assembly	3.2.3 (Disassemble and Inspect)	GFP. Submit a CIR.
7	Disassemble and Inspect	4	Control Station	3.2.3 (Disassemble and Inspect)	GFP. Submit a CIR.
8	Disassemble and Inspect	4	Winch Assembly	3.2.3 (Disassemble and Inspect)	Submit a CIR. GFP drum and shaft bushing. Renew all bearings and seals.
9	Disassemble and Inspect	4	Band Brake	3.2.3 (Disassemble and Inspect)	Submit a CIR. Renew Brake lining and fasteners. 6.5 ft Scan-Pac Green Gripper 5/8” x 4 Wide brake lining and 43 set fasteners.
10	Renew	4	Wire Rope Assembly	D2.2 (Wire Rope Assemblies)	GFP Wire rope assembly. Note, the GFP wire rope is not lubricated.
11	Disassemble and Inspect	4	Directional Control Valve	3.2.3 (Disassemble and Inspect)	Submit a CIR. Renew seals.
12	Disassemble and Inspect	4	Clutch assembly	3.2.3 (Disassemble and Inspect)	Submit a CIR. GFP.
13	Renew	4	Pressure Gage	Renew	GFP
14	NDE	4	Cross Deck Winch Foundations	3.2.5 (NDE)	Areas to NDE: all weld

#	TASK TYPE (SFLC STD SPEC 5000 PARA. REF.)	QTY	COMPONENT OR ASSEMBLY	APPENDIX AND PARA. FROM SFLC STD SPEC 5000	OTHER
					joints connecting winch foundations to the deck. Submit a CFR.
15	Renew	4	Foundation Fasteners	D2.1 (Fastener assemblies	Provide, All foundation bolts must be 3/4 - 10NC Grade 8. Tighten all loose bolts to the torque recommended by the TP 3558, SWBS 573, Sections A and B.
16	Preserve	4	Winch Assembly and associated foundation	3.2.4 (Preservation)	Surfaces to be preserved include, but are not limited to: inside and outside surfaces of foundations, and all winch exterior surfaces that are accessible with no disassembly. Select the following top coat colors: - Spar (10371) for equipment surfaces. - Black (17038) for foundation surfaces.
17	Disassemble and Inspect	2	Flag Block, Bulkhead-Mounted Sheave Assembly	3.2.3 (Disassemble and Inspect)	Submit a CIR. GFP, Fleet Drawing FL-1702-11 Renew bearings and seals.
18	Groom and Lubricate	4	Crossdeck Winch Assembly	3.2.6 (Groom and lubricate)	
19	Weight Test	4	Crossdeck Winch Assembly	B2.3 (Winches)	See CG TP 3558, SWBS 573, Submit a CFR.
20	Fabricate and Install	4	Label Plate	B2.9 (Label plates)	

3.5 Additional tasks. The Contractor must perform the task(s) marked with an “X” in Table 3. Combine or group CFRs, as required, to minimize administrative burden and maximize efficiency.

TABLE 3 – ADDITIONAL TASKS

DESIGNATED EQUIPMENT	TASK TYPE (SFLC STD SPEC 5000 PARA. REF.)	COMPONENT OR ASSEMBLY	APPENDIX AND PARA. FROM SFLC STD SPEC 5000*	OTHER
X PFW _X__ SFW X PAW X SAW	Renew	Hose Assembly - Externally Installed (Set Of 6 Per Winch)	C2.2 (Hose assemblies)	
X	Disassemble and Inspect	Hand Pump Assembly	3.2.3 (Disassemble and Inspect)	See CG TP 3558, SWBS 573, Sections A and B. Submit CFR
X	Renew	Hand Pump Assembly	N/A	See CG TP 3558, SWBS 573, Sections A and B.

4. NOTES

This section is not applicable to this work item.

WORK ITEM 12: Hydraulic Inhaul Winch, Inspect And Service

1. SCOPE

1.1 Intent. This work item describes the requirements for the Contractor to inspect and service the hydraulic inhaul (buoy chain) winch.

1.2 Government-furnished property.

MTI	ITEM DESCRIPTION	NSN/PN	QTY	ESTIMATED COST ($/UNIT)
N	Roller bearing Unit	NSN: 3130-01-504-4363	2 ea.	4,012.00
N	Grease seal	NSN: 5330-01-462-5544	4 ea.	79.25
N	Level wind pivot bushing	NSN: 3120-01-621-2293	1 ea.	1,139.00
N	Level wind thrust bearing	NSN: 3120-01-621-2300	2 ea.	483.30
N	Rexroth DCV	NSN: 4810-01-507-0037	1 ea.	208.29
N	Rexroth Sandwich Flow Control	NSN: 4810-01-505-9289	1 ea.	250.00
N	Sun Sandwich Relief Valves	NSN: 4820-01-439-2451	2 ea.	900.00
Y	Level Wind Hydraulic Cylinder	NSN: 3040-01-441-3721	1 ea.	7,423.00
N	3:1 Pilot Ratio, Vented Counterbalance Valve Assembly	NSN: 4820-01-563-5841	1 ea	98.70
N	Fully Adjustable Needle Valve	NSN: 4820-01-416-0579	1 ea	48.75
N	Wire Rope Assembly	NSN: 4010-01-646-6972	1 ea.	500.00
Y	**Hydraulic Motor	NSN: 4320-01-445-2248	1 ea	23,998
N	**Pump, Hydraulic Ram, Hand Driven	NSN: 4320-01-286-4065	1 ea.	419.77
N	**Cylinder Pin	NSN: 5315-01-515-9847	1 ea	500.00
N	**Cylinder Pin	NSN: 5315-01-515-9912	1 ea	520.00

****New or refurbished equipment that the Government may provide for installation in place of existing equipment.**

2. REFERENCES

COAST GUARD DRAWINGS

Coast Guard Drawing 225B WLB 549-001, Rev A, Onboard Lubrication Requirements

Coast Guard Drawing 225B WLB 556-001, Rev F, Hydraulic System Diagram

Coast Guard Drawing 225B WLB 573-001, Rev E, Buoy Handling System Arrangement

Coast Guard Drawing 225B WLB 573-002, Rev -, Weight Handling System Arrangement

Coast Guard Drawing FL 7101-573, Rev L, Buoy Chain Winch Assy Model CW1

COAST GUARD PUBLICATIONS

Coast Guard Technical Publication (TP) 3498, Section A, Jul 2015, Buoy Chain Winch

Surface Forces Logistics Center Standard Specification 0000 (SFLC Std Spec 0000), 2020, General Requirements

Surface Forces Logistics Center Standard Specification 5000 (SFLC Std Spec 5000), 2020, Auxiliary Machine Systems

Surface Forces Logistics Center Standard Specification 6310 (SFLC Std Spec 6310), 2020, Requirements for Preservation of Ship Structures

OTHER REFERENCES

ASTM International (ASTM) D5363, 2008, Standard Specification for Anaerobic Single Component Adhesives (AN)

MIL-S-45180, 1998; Sealing Compound, Gasket, Hydrocarbon Fluid and Water Resistant

MIL-PRF-24176 , Oct 2004, Cement, Epoxy, Metal Repair And Hull Smoothing (Metric)

The Society for Protective Coatings (SSPC)/NACE International (NACE) Joint Surface Preparation Standard SSPC-SP 10/NACE No.2, 2007, Near-White Blast Cleaning

3. REQUIREMENTS

3.1 General.

3.1.1 CIR. The Contractor must submit a CIR for the inspections listed in the following task(s) in Table 1:

- Task#1

3.1.2 Tech Rep.

Not applicable.

3.1.3 Protective measures. The Contractor must furnish and install all protective measures in accordance with SFLC Std Spec 0000, paragraph 3.3.3 (Vessel component, space, and equipment protection).

3.1.3.1 Protective measures, hydraulic system(s). Maintain existing hydraulic system cleanliness and take all necessary precautions to prevent the introduction of contaminants into the hydraulic system. Immediately after disconnecting or removing components from the hydraulic system, seal all openings to the rest of the system using caps for externally threaded connection points, bolt-on blanks, or taped-on discs/covers made of durable plastic or sheet-metal that is no less than 1/16-inch thick.

NOTE

Be aware that plastic bags may be used only when arrangement or configuration prevents the use of the other sealing methods specified above.

3.1.4 Interferences. The Contractor must handle all interferences in accordance with SFLC Std Spec 0000, paragraph 3.3.5 (Interferences).

3.1.5 General hydraulic system requirements. The Contractor must perform all work in accordance with paragraph 3.1 of SFLC Std Spec 5000, as applicable.

3.1.6 Contractor-furnished parts. The Contractor must furnish all snap rings, bearings, thrust buttons, seals, o-rings, gaskets, seal washers, keys, shims, lockwashers, bushings, dowel pins, thrust washers, cotter pins, rope clamp, foundation bolts and nuts, as applicable, in accordance with Coast Guard Drawings 225B WLB 549-001, 225B WLB 556-001, 225B WLB 573-001, and 225B WLB 573-002.

3.2 Recurring maintenance requirements. The Contractor must perform the tasks in Table 1 below.

TABLE 1 – RECURRING MAINTENANCE REQUIREMENTS

				ADDITION REQUIREMENTS	
#	**TASK TYPE (SFLC STD SPEC 5000 PARA. REF.)**	**QTY**	**COMPONENT OR ASSEMBLY**	**APPENDIX AND PARA. FROM SFLC STD SPEC 5000**	**OTHER**
1	Operate and Inspect	1	Buoy Chain In-haul Winch and Level Wind Arm Assembly	3.2.1 (Operate and Inspect)	Inspection particulars: 1. Inspect hydraulic hoses, ensuring that hose tags match hose log installation dates. 2. Visually inspect level wind arm, and hydraulic cylinder. 3. Inspect roller chock bearings, to ensure compliance with Coast Guard Drawing FL 7101-573. 4. Inspect foundation mounting bolts. 5. Visually inspect pillow block bearings, seals, and mounting bolts; check for proper bearing alignment. 6. Inspect wire rope, hook termination, and lubrication. 7. Inspect pinion and drum drive gears. Check for proper lubrication. 8. Check gear train backlash, to ensure whether backlash is between .020 and .030 inch. 10. Check hydraulic motor for proper alignment, Check all hardware and pinion seals for leakage 11. Inspect hydraulic controls for corrosion and freedom of

				ADDITION REQUIREMENTS	
#	**TASK TYPE (SFLC STD SPEC 5000 PARA. REF.)**	**QTY**	**COMPONENT OR ASSEMBLY**	**APPENDIX AND PARA. FROM SFLC STD SPEC 5000**	**OTHER**
					operation/adjustment (including emergency brake components). 12. Check chain winch speed; document whether satisfactory or not. 13. Check level wind speed; document whether satisfactory or not. 14. Verify level wind arm relief valve settings. 15. Inspect chain winch remote's handle and rubber boot. 16. Check and operate chain winch and level wind arm controls from remove (crane booth or shack). 17. Inspect the winch ratchet pawl for proper operation of the pawl and lock pin. Submit a CIR.
2	Service and Inspect	1	Ratchet Pawl Assembly	3.2.2 (Service and inspect)	Submit a CFR.
3	Service and Inspect	1	Bull and Pinion Gears	D2.4 (Open Gearing And Gear Reducers)	Submit a CFR.
4	Inspect and Preserve	1	Winch Drum and Shaft Assembly (External Surfaces)	3.2.4 (Preserve)	1. Visual inspection of inspection of the load bearing ends of the shaft for cracks. Submit a CFR. 2. Abrasive-blast drum shaft to "Near-White", in accordance with SSPC-SP 10. 3. Coat blasted surfaces with one coat 3.0-4.0 mils DFT Inorganic Zinc (See SFLC Std Spec 6310, Appendix C).
5	Preserve		Winch Drum (Internal Surfaces)	N/A	1. Fill interior winch drum with 10 gallons of rust preventive compound conforming to MIL-PRF-16173, Class II, Grade 3, and rotate drum for 5 minutes to coat all interior

				ADDITION REQUIREMENTS	
#	**TASK TYPE (SFLC STD SPEC 5000 PARA. REF.)**	**QTY**	**COMPONENT OR ASSEMBLY**	**APPENDIX AND PARA. FROM SFLC STD SPEC 5000**	**OTHER**
					surfaces and then drain. 2. Drain, collect, and dispose of drained compound in accordance with all applicable Federal, state, and local regulations. Ensure that the coated surfaces are left exposed to the atmosphere for 24 hours to allow for adequate drying. 3. Renew each plug with a new stainless steel, Type 316, or Monel drain plug. Coat new plugs prior to installation with a sealing and locking compound conforming to ASTM D5363-AN0123 or a flexible joint compound conforming to MIL-S-45180, Type II.
6	Service and Inspect	1	Roller Chock Shaft Assembly	3.2.2 (Service and inspect)	GFP. Submit a CFR.
7	Service and Inspect	1	Level Wind Arm Pivot Pin Assembly	3.2.2 (Service and inspect)	GFP. Submit a CFR.
8	Renew and Preserve	1	Level Wind Arm Hydraulic Cylinder	3.2.4 (Preserve)	GFP.
9	Renew		Wire rope assembly	D2.2 (Wire Rope Assemblies)	GFP.
10	Renew	1	Level Wind Cylinder Control Block	C2.4 (Valves And Manifolds)	GFP
11	Service and Inspect	1	Chain Winch Control Block	C2.4 (Valves And Manifolds)	GFP Submit a CFR.
12	Renew	1	Level Wind Hydraulic Cylinder.		GFP
13	Renew	18	Buoy Chain In-haul Winch Foundation Bolts	D2.1(Fastener Assemblies)	Type: 1"-8UNC-2A x 4-1/2" LG, SS 316 Torque value: See Table 6-1 in TP-3498.
14	NDE	1	Buoy Chain In-haul Winch and Level Wind Arm Assembly Foundations	3.2.5 (NDE)	Weld joints to NDE: all joints attaching winch foundations to deck and ‘donut’ in pawl-side drum flange (identified as PN 4A in Section 99-E of drawing FL 7101-573). Submit a CFR.

				ADDITION REQUIREMENTS	
#	**TASK TYPE (SFLC STD SPEC 5000 PARA. REF.)**	**QTY**	**COMPONENT OR ASSEMBLY**	**APPENDIX AND PARA. FROM SFLC STD SPEC 5000**	**OTHER**
15	Preserve	1	Buoy Chain In-haul Winch Assembly and Level Wind Arm Assembly	3.2.4 (Preservation)	Surfaces to be preserved include, but are not limited to: winch drum shaft assembly, ratchet pawl assembly, level wind arm hydraulic cylinder, and all previously coated surfaces.
16	Renew	1	Counterbalance Valve Assembly, and Fully Adjustable Needle Valve	C2.4 (Valves And Manifolds)	GFP, Adjust Counterbalance manifold setting Appendix F of Tech Pub 3498.
17	Renew	1	Hydraulic motor		GFP
18	Align	1	Buoy Chain In-haul Winch Assembly		Perform alignment per Appendix E of Tech Pub 3498, Chain Winch Realignment Instructions. Submit a CFR
19	Renew	1	Hand Pump		GFP
20	Groom and Lubricate	1	Buoy Chain In-haul Winch and Level Wind Arm Assembly	3.2.6 (Groom and Lubricate)	Perform all adjustments in Chapter 6-2 of TP-3498.
21	Weight Test	1	Buoy Chain In-haul Winch and Level Wind Arm Assembly	N/A	Perform all weight testing In accordance TP-3498, Chapter 6, paragraph 8-6.4, Inspection and test procedures for the Buoy Chain Winch Model CW-1 onboard 175WLM, 225 WLB, and 240 WLBB class cutters. See Table 2 below. Submit a CFR.
22	Fabricate and Install	1	Label plate	B2.9 (Label Plates)	

NOTE

Coast Guard personnel will operate all machinery during testing.

TABLE 2 – TEST WEIGHTS

	MAIN HOIST TEST WEIGHTS
Static	24,750 (+5% - 0%) lbs
Rated	16,500 (+5% - 0%) lbs
Emergency Brake Release	5,000 (+0% - 5%) lbs

3.3 Additional maintenance requirements. The Contractor must perform tasks in Table 3 below marked with an "X". Submit a CFR to document all inspections and recommended additional repairs. Combine or group CFR, as required, to minimize administrative burden and maximize efficiency.

NOTE

Tasks not initially marked with an "X" must be exercised via authorized and released Change Requests (CR), when determined to be necessary by inspection results.

TABLE 3 – ADDITIONAL MAINTENANCE REQUIREMENTS

				ADDITIONAL REQUIREMENTS	
X	**TASK TYPE (SFLC STD SPEC 5000 PARA. REF.)**	**QTY**	**COMPONENT OR ASSEMBLY**	**APPENDIX AND PARA. FROM SFLC STD SPEC 5000**	**OTHER**
	Preserve	1	Winch Drum (Internal Surfaces)	N/A	1. Drill and tap two one- inch drain and fill holes, in locations designated by the CG Inspector. 2. Preserve internal surfaces, as specified in Task # 5 of Table I. 3. Plug each hole with a new stainless steel, Type 316, or Monel plug. 4. Coat new plugs prior to installation with a sealing and locking compound conforming to ASTM D5363-AN0123 or a flexible joint compound conforming to MIL-S-45180, Type II.
X	Renew	All	All Externally Installed Hose Assemblies	C2.2 (Hose Assemblies)	
X	Disassemble and Inspect	1	Ratchet Pawl Assembly	3.2.3 (Disassemble and Inspect)	Submit a CIR.
X	Disassemble and Inspect	1	Bull and Pinion Gears	D2.4 (Open Gearing And Gear Reducers)	Submit a CIR.
X	Disassemble and Inspect	1	Roller Chock Shaft Assembly	3.2.3 (Disassemble and Inspect)	Submit a CIR. GFP.
X	Disassemble and Inspect	1	Level Wind Arm Pivot Pin Assembly	3.2.3 (Disassemble and Inspect)	Submit a CIR. GFP.
X	Disassemble and Inspect	1	Level Wind Cylinder Control Block	C2.4 (Valves And Manifolds)	Submit a CIR.
X	Disassemble and Inspect	1	Chain Winch Control Block	C2.4 (Valves And Manifolds)	Submit a CIR.
X	Disassemble and Inspect	1	Brake Control Block	C2.4 (Valves And Manifolds)	Submit a CIR.

	Disassemble and Inspect	1	Hydraulic motor	3.2.3 (Disassemble and Inspect)	Perform alignment per Appendix E of Tech Pub 3498, Chain Winch Realignment Instructions. Submit a CIR.
X	Renew	1	Hand Pump and Isolation Valves	C2.4 (Valves And Manifolds)	GFP.
	Renew	1	Hydraulic motor	3.2.4 (Preservation)	GFP. Return the original hydraulic motor to the CG PA as a MTI. Perform alignment per Appendix E of Tech Pub 3498, Chain Winch Realignment Instructions.
X	Renew and Preserve	1	Level Wind Arm Hydraulic Cylinder	3.2.4 (Preservation)	GFP.
X	Disassemble and inspect	1	Winch Drum Shaft Assembly	3.2.3 (Disassemble and inspect)	Submit a CIR. GFP.
X	Disassemble and Inspect	1	Roller Chock Shaft Assembly	3.2.3 (Disassemble and inspect)	Submit a CIR. GFP.
X	Disassemble and Inspect	1	Level Wind Arm Pivot Pin Assembly	3.2.3 (Disassemble and inspect)	Submit a CIR. GFP.
	Renew	1	Hand Pump and Isolation Valves	C2.4 (Valves And Manifolds)	GFP.
	Renew	1	Level Wind Arm Hydraulic Cylinder	3.2.4 (Preserve)	GFP.
	Renew	1	Wire rope assembly	D2.2 (Wire Rope Assemblies)	Nominal diameter: 1-1/8 inch Nominal strength: XIPS Total length of rope required: 150 ft. End fitting type: Fiege OR poured spelter.
	Renew	18	Buoy Chain In-haul Winch Foundation Bolts	D2.1(Fastener Assemblies)	Type: 1"-8UNC-2A x 4-1/2" LG, SS 316 Torque value: See Table 6-1 in TP-3498.

X	Renew	1	Counterbalance Valve Assembly, and Fully Adjustable Needle Valve	C2.4 (Valves And Manifolds)	GFP, Adjust Counterbalance manifold setting Appendix F of Tech Pub 3498.

4. NOTES

This section is not applicable to this work item.

WORK ITEM 13: Mechanical Chain Stoppers, Inspect and Service

1. SCOPE

1.1 Intent. This work item describes the requirements for the Contractor to inspect and service the port and starboard mechanical chain stoppers.

1.2 Government-furnished property.

MTI	ITEM DESCRIPTION	NSN/PN	QTY	ESTIMATED COST ($/UNIT)
N	Hardware Kit, Pins	NSN: 2030-01-485-7209	2 ea.	528.47
N	Hardware Kit, Mechanical	NSN: 2030-01-485-7215	2 ea.	538.91

2. REFERENCES

COAST GUARD DRAWINGS

Coast Guard Drawing FL 2605-031, Rev D, Mechanical Chain Stopper, 1-7/8" Buoy Chain

Coast Guard Drawing FL 2605-034, Rev D, Mechanical Chain Stopper Repair Kit: 1-7/8", 1-5/8" & 1-1/4"

COAST GUARD PUBLICATIONS

Coast Guard Technical Publication (TP) 3749, 26-APR-05, 1-7/8 Inch ATON Mechanical Chain Stopper

Surface Forces Logistics Center Standard Specification 0000 (SFLC Std Spec 0000), 2022, General Requirements

Surface Forces Logistics Center Standard Specification 5000 (SFLC Std Spec 5000), 2022, Auxiliary Machine Systems

OTHER REFERENCES

None

3. REQUIREMENTS

3.1 General.

3.1.1 CIR. The Contractor shall submit a CIR for the inspections listed in Table 1, as follows:

- Task #1.
- Task #2.

3.1.2 Tech Rep.

Not applicable.

3.1.3 Protective measures. The Contractor shall furnish and install all protective coverings to seal off and protect all non-affected vessel's components, equipment, and spaces near the work area against contamination during the performance of work. Upon completion of work, the Contractor shall remove all installed protective measures, inspect for the presence of contamination, and return all contaminated equipment, components, and spaces to original condition of cleanliness.

3.1.4 Interferences. The Contractor shall handle all interferences in accordance with SFLC Std Spec 0000, paragraph 3.3.5 (Interferences).

3.2 Repair particulars. The Contractor shall use FL2605-31, FL 2605-034, and TP 3749 for reference, and perform all tasks in Table 1.

TABLE 1 – REPAIR TASKS

				ADDITIONAL REQUIREMENTS	
#	**TASK TYPE (SFLC STD SPEC 5000 PARA. REF.)**	**QTY**	**COMPONENT OR ASSEMBLY**	**APPENDIX AND PARA. FROM SFLC STD SPEC 5000**	**OTHER**
1	Operate and Inspect	2	Mechanical Chain Stopper Assembly	3.2.1 (Operate and Inspect)	Submit a CIR.
2	Disassemble and Inspect	2	Mechanical Chain Stopper Assembly	3.2.3 (Disassemble and Inspect)	Submit a CIR. Reassemble chain stoppers with GFP. Refer to paragraph 3.2.1 for materials.
3	NDE	2	Mechanical Chain Stopper Assembly	3.2.5 (NDE)	NDE task is limited to chain stopper welds.
4	Preserve	2	Mechanical Chain Stopper Assembly and foundation	3.2.4 (Preservation)	Select the following top coating colors: Black (17038) for the chain stopper surfaces. Gray (16099) for the foundation surfaces.
5	Groom and Lubricate	2	Mechanical Chain Stopper Assembly	3.2.6 (Groom and Lubricate)	
6	Weight Test	2	Mechanical Chain Stopper Assemblies	B2.1(Mechanical Chain Stoppers)	Operational test load: 25,000 lbs. Submit a CFR.

				ADDITIONAL REQUIREMENTS	
#	**TASK TYPE (SFLC STD SPEC 5000 PARA. REF.)**	**QTY**	**COMPONENT OR ASSEMBLY**	**APPENDIX AND PARA. FROM SFLC STD SPEC 5000**	**OTHER**
7	Fabricate and Install	2	Label plate	B2.9 (Label plates)	

3.2.1 Breakdown GFP kit. For full kit parts list, refer to Coast Guard Drawing FL 2605-034. Pin and bushing kits contain the following parts, typically: spring assembly pin, SS washers, SS hex bolt, end hinge pins, middle hinge pins, lock hinge pin, grease fittings and bronze bushings. At the installation of each bronze bushing, the Contractor shall drill a hole to line up with grease fitting in accordance with «DWG1» and FL 2605-034. Clean each bushing after drilling.

4. NOTES

This section is not applicable to this work item.

WORK ITEM 14: Warping Capstan, Inspect and Service

1. SCOPE

1.1 Intent. This work item describes the requirements for the Contractor to inspect and service the hydraulic warping the capstan.

1.2 Government-furnished property.

None.

2. REFERENCES

COAST GUARD DRAWINGS

None.

COAST GUARD PUBLICATIONS

Coast Guard Technical Publication (TP) 3559, Section 582B, Apr 2009, Aft Capstan, 21" - Model BMD-475

Surface Forces Logistics Center Standard Specification 0000 (SFLC Std Spec 0000), 2020, General Requirements

Surface Forces Logistics Center Standard Specification 5000 (SFLC Std Spec 5000), 2020, Auxiliary Machine Systems

OTHER REFERENCES

None.

3. REQUIREMENTS

3.1 General.

3.1.1 CIR. The Contractor must submit a CIR for the inspections listed in Table 1:

- Task #1.
- Task #2.
- Task #4.
- Task #5.

3.1.2 Tech Rep.

Not applicable.

3.1.3 Protective measures. The Contractor must furnish and install all protective measures in accordance with SFLC Std Spec 0000, paragraph 3.3.3 (Vessel component, space, and equipment protection).

3.1.4 Interferences. The Contractor must handle all interferences in accordance with SFLC Std Spec 0000, paragraph 3.3.5 (Interferences).

3.2 Tasks to be accomplished. The Contractor must perform the tasks designated in Table 1 below, in accordance with SFLC Std Spec 5000 and CG TP-3559, SWBS 582B

TABLE 1 – RECURRING TASKS

				ADDITION REQUIREMENTS	
#	**TASK TYPE**	**QTY**	**COMPONENT OR ASSEMBLY**	**APPENDIX AND PARA. FROM SFLC STD SPEC 5000**	**OTHER**
1	Operate and Inspect	1	Warping Capstan	3.2.1 (Operate and inspect)	Submit a CIR.
2	Disassemble and Inspect	1	Capstan Head Shaft Assembly	3.2.3 (Disassemble and inspect)	Submit a CIR.
3	Service and Inspect	1	Gear Reducer	D2.4 (Open gearing and gear reducers)	Submit a CFR.
4	Disassemble and Inspect	1	Disc Brake	D2.3 (Brakes and clutches)	Submit a CIR.
5	Disassemble and Inspect	1	Control Valve	C2.4 (Valves and manifolds)	Submit a CIR.
6	NDE	1	Warping Capstan Assembly And Foundation	3.2.5 (NDE)	NDE: All joints attaching capstan foundations to deck. Submit a CFR.
7	Preserve	1	Warping Capstan Assembly And Foundation	3.2.4 (Preservation)	Surfaces to be preserved include entire capstan assembly, head shaft assembly, control valve and stand, gear reducer, foundation, and all other previously coated surfaces.
8	Groom and lubricate	1	Warping Capstan Assembly	3.2.6 (Groom and lubricate)	
9	Operational and Weight Test	1	Warping Capstan	B2.6 (Capstans)	Submit a CFR.
10	Fabricate and Install	1	Label Plates	B2.9 (Label plates)	

Developer: Delete paragraphs 3.3 and 3.4, and Table 2, if not applicable/needed.

3.3 Additional maintenance requirements. The Contractor must perform the task below, if marked with an "X".

TABLE 2 – additional tasks

ADDITIONAL TASK		TASK TYPE	QTY	COMPONENT OR ASSEMBLY	APPENDIX AND PARA. FROM SFLC STD SPEC 5000	OTHER
____	1	Renew	6	Hose Assemblies	C2.2 (Hose assemblies)	Submit a CFR.

4. NOTES

This section is not applicable for this work item.

WORK ITEM 15: Single Point Davit, Inspect and Service

1. SCOPE

1.1 Intent. This work item describes the requirements for the Contractor to inspect and service the Single Point Davit (SPD) - Model RAD30-15.5.

1.2 Government-furnished property.

MTI	ITEM DESCRIPTION	NSN/PN	QTY	ESTIMATED COST ($/UNIT)
N	Swing Brake Seal Kit	NSN: 5330-01-390-3514 PN: 90-016-2011	2 ea	68.45
N	Swing Brake Disc Kit	NSN: 3010-01-464-1040 PN: 90-016-2131	2 ea	187.20
N	Swing Holding Valve	NSN: 4820-01-466-4918 PN: CBEA-LHV-YHL (Sun Hydraulics)	1 ea	251.50
N	Wire Rope Assembly	NSN: 4010-01-620-9604 PN: JWCG062100PL	1 ea	660.00

***Government-loaned property, which must be returned to the vessel upon completion of the availability.**
****New or refurbished equipment that the Government may provide for installation in place of existing equipment.**
*****Government-furnished property, which is to be supplied by either the vessel or the C4IT Service Center.**

2. REFERENCES

COAST GUARD DRAWINGS

Coast Guard Drawing 225B WLB 556-005, Rev D, Aft Hydraulic System A/D, Fr 66 Aft, Block 950, 970

COAST GUARD PUBLICATIONS

Coast Guard Technical Publication (TP) 11101, SWBS 583, Section A (SWBS 583A), Davit, Single Point Slewing Arm Model - RAD30 - 15.5 (BMD-710)

Surface Forces Logistics Center Standard Specification 0000 (SFLC Std Spec 0000), 2020, General Requirements

Surface Forces Logistics Center Standard Specification 0740 (SFLC Std Spec 0740), 2020, Welding and Allied Processes

Surface Forces Logistics Center Standard Specification 5000 (SFLC Std Spec 5000), 2020, Auxiliary Machine Systems

OTHER REFERENCES

None

3. REQUIREMENTS

3.1 General.

3.1.1 CIR. The Contractor must submit a CIR for the inspections listed in the following paragraph(s):

- Task #1.
- Task #2.
- Task #3.
- Task #4.
- Task #5.
- Task #7.

3.1.2 Tech Rep.

Not applicable.

3.1.3 Protective measures. The Contractor must furnish and install all protective measures in accordance with SFLC Std Spec 0000, paragraph 3.3.3 (Vessel component, space, and equipment protection).

3.1.3.1 Protective measures, hydraulic system(s). Maintain existing hydraulic system cleanliness and take all necessary precautions to prevent the introduction of contaminants into the hydraulic system. Immediately after disconnecting or removing components from the hydraulic system, seal all openings to the rest of the system using caps for externally threaded connection points, bolt-on blanks, or taped-on discs/covers made of durable plastic or sheet-metal that is no less than 1/16-inch thick.

NOTE
Be aware that plastic bags may be used only when arrangement or configuration prevents the use of the other sealing methods specified above.

3.1.4 Interferences. The Contractor must handle all interferences in accordance with SFLC Std Spec 0000, paragraph 3.3.5 (Interferences). Known interferences include, but are not limited to the following:

- Small Boat

3.2 Inspect and service task particulars. The Contractor must refer to CG TP-11101 as guidance during the performance of the tasks specified in Table 1. Perform all designated tasks in accordance with SFLC Std Spec 5000, as applicable.

TABLE I – RECURRING TASKS

	ADDITION REQUIREMENTS

#	TASK TYPE	QTY	COMPONENT OR ASSEMBLY	APPENDIX AND PARA. FROM 5000_STD	OTHER
1	Operate and Inspect	1	SPD System	3.2.1 (Operate and Inspect) Appendix A	Submit a CIR
2	Disassemble and Inspect	1	Fall Sheave Pin Assembly	3.2.3 (Disassemble and inspect)	Submit a CIR Renew bearing and seals.
3	Service and Inspect	1	Accumulator Assembly	C2.4 (Valves and manifolds)	Submit a CIR.
4	Service and Inspect	1	Accumulator Charging Hand Pump Assembly	C2.4 (Valves and manifolds)	Submit a CIR
5	Service and Inspect	1	Control Valve Assembly	C2.4 (Valves and manifolds)	Submit a CIR
6	Renew	1	Counterbalance Valve	C2.4 (Valves and manifolds)	GFP
7	Service and Inspect	1	Winch Assembly	3.2.2 (Service and inspect)	Submit a CIR.
8	Service and Inspect	2	Swing Drive Brake	D2.3 (Brakes and clutches)	GFP
9	Renew	3	External Hose Assembly	C2.2 (Hose assemblies)	Submit a CFR.
10	Renew	1	Wire Rope Assembly	D2.2 (Wire rope assemblies)	GFP.
11	Renew	All	System Hydraulic Fluid	C2.1 (Fluids)	
12	Preserve	1	SPD System	3.2.4 (Preservation)	Preservation to include all previously-coated surfaces.
13	Groom and Lubricate	1	SPD System	3.2.6 (Groom and Lubricate)	Perform all maintenance specified in TP-11101, Chapter 4.
14	Final Operational And Weight Tests	1	SPD System	B2.7 (Davits)	After completion of all other work, perform the operational and weight testing for this system. Main Hoist test weights are as follows: • Static: 9,000 (+450 -0) pounds • Dynamic: 7,500 (+375 -0) pounds • Rated: 6,000 (+0 -300) pounds • CT Operational test: 1,500 (+75 -000) pound. Submit a CFR.
15	Fabricate and Install	1	Label plate	B2.9 (Label Plates)	
16	Weatherize	All	Hose fittings	C2.2.1.2.2 (Weatherization).	

3.3 Special requirements for various components. If a Change Request has been authorized for additional work on any of the components listed in Table II below, the Contractor must refer to the corresponding Appendix or paragraph of SFLC Std Spec 5000, as applicable.

TABLE II – SPECIAL REQUIREMENTS

COMPONENT	APPENDIX & PARAGRAPH IN SFLC STD SPEC 5000
Fluids	C2.1
Hose assemblies	C2.2
Piping and tubing	C2.3
Valves and manifolds	C2.4
Gages	C2.5
Gas charged accumulators	C2.6
Heat exchangers and fluid coolers	C2.7
Systems	C2.8
Fastener assemblies	D2.1
Wire rope assemblies	D2.2
Brakes and clutches	D2.3
Open gearing and gear reducers	D2.4

4. NOTES

This section is not applicable to this work item.

WORK ITEM 16: Commissary Hoist, Inspect and Service

1. SCOPE

1.1 Intent. This work item describes the requirements for the Contractor to inspect and service the Commissary Hoist system.

1.2 Government-furnished property.

None.

2. REFERENCES

COAST GUARD DRAWINGS

None.

COAST GUARD PUBLICATIONS

Coast Guard Technical Publication (TP) 3562, Sep 2013, SWBS 589, Section C, Dumbwaiter, Model –F-WK-806

Surface Forces Logistics Center Standard Specification 0000 (SFLC Std Spec 0000), 2020, General Requirements

Surface Forces Logistics Center Standard Specification 3020 (SFLC Std Spec 3020), 2020, Overhaul AC Electrical Motors

Surface Forces Logistics Center Standard Specification 5000 (SFLC Std Spec 5000), 2020, Auxiliary Machine Systems

OTHER REFERENCES

None.

3. REQUIREMENTS

3.1 General.

3.1.1 CIR. The Contractor must submit a CIR for the inspections listed in the following tasks in Table 1:

- Task #1.
- Task #2.
- Task #3.

3.1.2 Tech Rep.

Not applicable.

3.1.3 Protective measures. The Contractor must furnish and install all protective measures in accordance with SFLC Std Spec 0000, paragraph 3.3.3 (Vessel component, space, and equipment protection).

3.1.4 Interferences. The Contractor must handle all interferences in accordance with SFLC Std Spec 0000, paragraph 3.3.5 (Interferences).

3.2 Inspection and service particulars. The Contractor must perform the tasks listed in Table 1 below in accordance with TP 3562, SWBS 589C; and using SFLC Std Spec 5000 as guidance.

TABLE 1 – TASK PARTICULARS

				ADDITIONAL REQUIREMENTS	
#	**TASK TYPE**	**QTY**	**COMPONENT OR ASSEMBLY**	**APPENDIX AND PARA. FROM 5000_STD**	**OTHER**
1	Operate and Inspect	1	Commissary Hoist	3.2.1 (Operate and inspect	Refer to TP 3562, SWBS 589C Submit a CIR.
2	Disassemble and Inspect	1	Electric brake	D2.3(Brakes and clutches)	Submit a CIR
3	Overhaul and Preserve	1	Electric Motor	3.2.4 (Preservation)	Perform requirements in paragraphs 3.1 thru 3.4.3 of SFLC Std Spec 3020. Submit a CIR for all inspections required
4	Service and Inspect	1	Hoist Sheave Assembly	3.2.2 (Service and inspect)	Submit a CFR.
5	Service and Inspect	1	Deflection Sheave Assembly	3.2.2 (Service and inspect)	Submit a CFR.
6	Service and Inspect	2	Carriage Guide Roller and Side Roller Assemblies	3.2.2 (Service and inspect)	Submit a CFR.
7	Service and Inspect	1	Carriage Sheave Assembly	3.2.2 (Service and inspect)	Submit a CFR.
8	Service and Inspect	1	Carriage Broken Rope Safety Device Assembly	3.2.2 (Service and inspect)	Submit a CFR.
9	Service and Inspect	1	Slack Rope Safety Device Assembly	3.2.2 (Service and inspect)	Submit a CFR.
10	Service and Inspect	1	Wire Rope Drum and Drum Shaft Assembly	3.2.2 (Service and inspect)	Submit a CFR.
11	Service and Inspect	1	Sprockets and Sprocket Shaft Assemblies, Roller Chain, and Chain Tension Assembly	3.2.2 (Service and inspect)	Submit a CFR.
12	Service and Inspect	1	Door Assembly	3.2.2 (Service and inspect)	Submit a CFR.
13	Service and Inspect	1	Control Station	3.2.2 (Service and inspect)	Submit a CFR.

				ADDITIONAL REQUIREMENTS	
#	**TASK TYPE**	**QTY**	**COMPONENT OR ASSEMBLY**	**APPENDIX AND PARA. FROM 5000_STD**	**OTHER**
14	Service and Inspect	1	Door Switch Assembly	3.2.2 (Service and inspect)	Submit a CFR.
15	Service and Inspect	1	Hold Level Door Assembly	3.2.2 (Service and inspect)	Submit a CFR.
16	Service and Inspect	1	Hold Level Deck Control Station	3.2.2 (Service and inspect)	Submit a CFR.
17	Service and Inspect	1	Hold Level Deck Door Switch Assembly	3.2.2 (Service and inspect)	Submit a CFR.
18	Service and Inspect	All	Guide Rail Assemblies	3.2.2 (Service and inspect)	Submit a CFR.
19	Service and Inspect	1	Carriage Assembly	3.2.2 (Service and inspect)	Submit a CFR.
20	Service and Inspect	1	Up Over Travel Limit Switch Assembly	3.2.2 (Service and inspect)	Submit a CFR.
21	Service and Inspect	1	Down Stop Limit Switch Assembly	3.2.2 (Service and inspect)	Submit a CFR.
22	Service and Inspect	1	Up Stop Limit Switch Assembly	3.2.2 (Service and inspect)	Submit a CFR.
23	Service and Inspect	1	Slack Rope Safety Device Limit Switch Assembly	3.2.2 (Service and inspect)	Submit a CFR.
24	Service and Inspect	1	Worm Gear Reducer	3.2.2 (Service and inspect)	Submit a CFR.
26	Renew	1	Wire Rope Assembly	D2.2 (Wire Rope Assemblies)	Refer to TP 3562, SWBS 589C
27	Preserve	1	Commissary Hoist Assembly	3.2.4 (Preservation)	Preservation to include: capstan assembly housing and foundation and the motor casing, and gear reducer, and all other previously painted associated components surfaces. Select the following top coat colors: Grey (26307)
28	Adjust and Align	1	Rails and Car Guide		Refer to TP 3562, SWBS 589C
29	Groom and lubricate	1	Commissary Hoist	3.2.6 (Groom and lubrication)	Refer to lubrication table in TP 3562, SWBS 589C

3.3 Operational test, post repairs. After completion of work and in the presence of the Coast Guard Inspector, the Contractor must thoroughly test and demonstrate the Commissary Hoist to be in satisfactory operating condition. Submit a CFR.

4. NOTES

This section is not applicable to this work item.

WORK ITEM 17: Buoy Crane, Appleton EB600-60-40, Inspect and Service

1. SCOPE

1.1 Intent. This work item describes the requirements for the Contractor to inspect and service the Appleton EB600-60-40 Crane.

1.2 Government-furnished property.

MTI	ITEM DESCRIPTION	NSN/PN	QTY	ESTIMATED COST ($/UNIT)
N	Main Fall Wire Rope	NSN: 4010-01-486-0047 PN: JWCG13001919PL	1	2,642.00
N	Aux Fall Wire Rope	NSN: 4010-01-594-2228 PN: JWCG75200637PL	1	805.32

****New or refurbished equipment that the Government may provide for installation in place of existing equipment.**

2. REFERENCES

COAST GUARD DRAWINGS

None.

COAST GUARD PUBLICATIONS

Coast Guard Technical Publication (TP) 10512, Section 573-A, July 2018, Buoy Handling Crane – Model EB600-60-40

Surface Forces Logistics Center Standard Specification 0000 (SFLC Std Spec 0000), 2020, General Requirements

Surface Forces Logistics Center Standard Specification 5000 (SFLC Std Spec 5000), 2020, Auxiliary Machine Systems

Surface Forces Logistics Center Standard Specification 6310 (SFLC Std Spec 6310), 2020, Auxiliary Machine Systems

OTHER REFERENCES

None.

3. REQUIREMENTS

3.1 General.

3.1.1 CIR. The Contractor must submit a CIR for the inspections required in the following Table 1 tasks:

- Task# 1.
- Task# 2.
- Task# 3.
- Task# 4.
- Task# 5.
- Task# 6.

3.1.2 Tech Rep. The Contractor must provide the services of a Qualified Technical Representative who is familiar with the Appleton EB600-60-40 equipment/system, to accomplish the following on site:

- Advise on manufacturer's proprietary system information.
- Ensure compliance with manufacturer's procedures and standards during system disassembly, inspection, and reassembly as applicable.

3.1.2.1 Ensure the Tech Rep has experience with the system/equipment stated above and demonstrated on their résumé.

3.1.2.2 Submit the name and résumé of the Tech Rep to the COR at the Arrival Conference.

3.1.3 Protective measures. The Contractor must furnish and install all protective measures in accordance with SFLC Std Spec 0000, paragraph 3.3.3 (Vessel component, space, and equipment protection).

3.1.3.1 Protective measures, hydraulic system(s). Maintain existing hydraulic system cleanliness and take all necessary precautions to prevent the introduction of contaminants into the hydraulic system. Immediately after disconnecting or removing components from the hydraulic system, seal all openings to the rest of the system using caps for externally threaded connection points, bolt-on blanks, or taped-on discs/covers made of durable plastic or sheet-metal that is no less than 1/16-inch thick.

NOTE

Be aware that plastic bags may be used only when arrangement or configuration prevents the use of the other sealing methods specified above.

3.1.4 Interferences. The Contractor must handle all interferences in accordance with SFLC Std Spec 0000, paragraph 3.3.5 (Interferences).

3.2 Tasks. The Contractor must perform the tasks specified in Table 1, for the buoy crane, in accordance with SFLC Std Spec 5000 and CG TP 10512. Install all Government-furnished equipment and components, as applicable, during equipment/component reassembly.

TABLE 1 - RECURRING TASKS

#	TASK TYPE	QTY	COMPONENT OR ASSEMBLY	APPENDIX AND PARA. FROM SFLC STD SPEC 5000	OTHER

#	TASK TYPE	QTY	COMPONENT OR ASSEMBLY	APPENDIX AND PARA. FROM SFLC STD SPEC 5000	OTHER
1	Operate and Inspect	1	Buoy Crane Assembly	3.2.1 (Operate and inspect)	Submit a CIR.
2	Service and Inspect	1	Buoy Crane Assembly	3.2.2 (Service and inspect)	Submit a CIR.
3	Disassemble and Inspect	1	Main Winch Brake Cylinder Assembly	3.2.3 (Disassemble and inspect) D2.3 (Brake and clutch)	Renew friction discs. Submit a CIR.
4	Disassemble and Inspect	1	Aux Winch Brake Cylinder Assembly	3.2.3 (Disassemble and inspect) D2.3 (Brake and clutch)	Renew friction discs. Submit a CIR.
5	Disassemble and Inspect	4	Slew Drive Brake Assemblies	3.2.3 (Disassemble and inspect) D2.3 (Brake and clutch)	Renew friction discs. Submit a CIR.
6	Service and Inspect	All	Fwd HPU Assemblies	3.2.2 (Service and inspect) C2.1 (Fluids)	Submit a CIR. Renew reservoir oil.
7	Renew	1	Main Hoist Wire Rope Assembly	D2.2 (Wire rope assemblies)	GFP. See 4.1 (Retention of wire rope manufacturer's Test Certification and Serial Number)
8	Renew	1	Aux Hoist Wire Rope Assembly	D2.2 (Wire rope assemblies)	GFP. See 4.1 (Retention of wire rope manufacturer's Test Certification and Serial Number).
9	Partially-Preserve	All	Crane Exterior Surfaces	3.2.4 (Preservation)	Surfaces to be preserved are all previously-painted surfaces, including but not limited to: boom, cylinder bodies, turret, hydraulic motor case, pedestal/foundation, winch body, control stand, foundation bolts and flange, etc. Disconnect components, as necessary, to facilitate partial-preservation.
10	Groom and Lubricate	1	Buoy Crane Assembly	3.2.6 (Groom and lubricate) C2.4 (Valves and manifolds)	Perform all tasks in TP 10512, paragraph 4-23. Set and tag in place all system pressure control valves (e.g. relief valves, etc.).

#	TASK TYPE	QTY	COMPONENT OR ASSEMBLY	APPENDIX AND PARA. FROM SFLC STD SPEC 5000	OTHER
11	Final test	1	Buoy Crane Assembly	B2.4.1 (Functional / No-load test) B2.4.3 (Winch Brake / Modified static load test) B2.4.4 (Dynamic Overload test) B2.4.5 (Rated load test)	Perform operational and weight testing. Use Paragraph 6-10 and Appendix W of TP 10512 for guidance. Refer to Table 2 for required test weights. Submit a CFR.
12	Fabricate and Install	1	Label plate	B2.9 (Label plates)	
13	Weatherize	All	Hose fittings	C2.2.1.2.2 (Weatherization).	

TABLE 2 - TEST WEIGHTS

	TEST WEIGHTS – AUX HOIST
Modified Static Test	15,000 (+5% - 0%)lbs
Dynamic	12,500 (+5% - 0%)lbs
Rated	10,000 (+0% - 5%)lbs at rated speed
	TEST WEIGHTS – MAIN HOIST
Modified Static Test	60,000 (+5% - 0%)lbs
Dynamic	45,000 (+5% - 0%)lbs
Rated	40,000 (+0% - 5%)lbs at rated speed

NOTE

Coast Guard Personnel will operate equipment.

3.3 Filtering hydraulic system using Contractor filter cart. The Contractor must furnish a minimum 5gpm filtering cart/rig equipped with a three-micron absolute filter, a water separator, and a pressure differential gage across the filter element assembly. Connect the supply and discharge lines of the filtering cart/rig to the hydraulic system.

NOTE

The best connection points will minimize filtering time and will maximize the rate at which previously unfiltered fluid passes through the rig/cart. Select points at opposite ends of the reservoir if possible.

3.3.1 Continuously circulate system hydraulic fluids through the filtering cart/rig. The Coast Guard Inspector must cycle all system actuators four separate times as described in the notice below during the filtering process. Upon conclusion of actuator cycling, take a hydraulic oil sample.

NOTE

To dislodge and suspend particulate contamination and to heat the fluid to a maximum, constant, steady state temperature, the Coast Guard inspector will cycle all actuators associated with the hydraulic system for a minimum of 20 minutes at the start of the filtering process. The Coast Guard Inspector will repeat this process a minimum of three additional times, equally spaced through the filtering period.

3.3.2 The Contractor must renew the filter element as required and whenever the pressure differential across the filter element exceeds the filter element manufacturer's specifications.

3.3.3 The Contractor must furnish a portable oil sample particle counting analyzer. All oil samples must be immediately tested with the portable analyzer onboard the Cutter. Submit CFR.

3.3.4 Whenever a noticeable increase in the pressure drop across the filter cart is observed, the filter must be renewed. Be aware that this may occur as frequently as 15 min intervals.

3.3.5 During filtering, constant monitoring of the filtering oil must be maintained in order to determine the contamination level. Filtering must continue until the fluid entering the return filter meets the particle population ISO cleanliness code of 19/17/14, in accordance with ISO 4406. In addition, the Contractor must visually inspect return filter for contamination and submit CFR.

3.3.6 The Contractor must furnish return filters as required and whenever the pressure differential across the filter element exceeds the filter element manufacturer's specifications. The Contractor must dispose all used filters in accordance with all rules and regulations.

3.3.7 Take a representative sample of oil from the hydraulic system in accordance with Std Spec 5000 paragraph C2.1.3. Send sample out to a laboratory for oil analysis. Analysis must include viscosity, moisture, total acid number, particle size and population in sufficient detail to determine ISO cleanliness code of 19/17/14, in accordance with ISO 4406. Submit CFR.

4. NOTES

4.1 Retention of wire rope manufacturer's Test Certification and Serial Number. Ship's crew will retain both main and aux wire rope manufacturer's test certification and serial numbers.

WORK ITEM 18: Grey Water Holding Tanks, Clean and Inspect

1. SCOPE

1.1 Intent. This work item describes the requirements for the Contractor to clean and inspect the following tank(s):

TABLE 1 – TANKS

TYPE OF TANK	LOCATION	CAPACITY - 95% (Gallons)	LOW SUCTION (Gallons)
Grey Water Tank	4-82-2-W	2,798	25
Grey Water Tank	4-48-1-W	11,264	50
Grey Water Tank	4-48-2-W	11,264	50

1.2 Government-furnished property.

None.

1. REFERENCES

COAST GUARD DRAWINGS

Coast Guard Drawing 225B WLB 593-001, Rev D, Sewage and Waste Water System Diagram

Coast Guard Drawing 225B WLB 593-009, Rev B, Sewage Holding Tank

COAST GUARD PUBLICATIONS

Surface Forces Logistics Center Standard Specification 0000 (SFLC Std Spec 0000), 2022, General Requirements

OTHER REFERENCES

ASTM International (ASTM) D1330, 2015, Standard Specification for Rubber Sheet Gaskets

3. REQUIREMENTS

3.1 General.

3.1.1 CIR.

None.

3.1.2 Tech Rep.

Not applicable.

3.1.3 Protective measures. The Contractor must furnish and install all protective measures in accordance with SFLC Std Spec 0000, (Vessel component, space, and equipment protection).

3.1.3.1 Plug all inlet and outlet piping in the tank(s) to prevent contaminants from entering. Use plugs with an attached lanyard, ring or other system that will ensure plugs are not lost in the pipe openings.

3.1.4 Interferences. The Contractor must handle all interferences in accordance with SFLC Std Spec 0000, (Interferences). Known interferences include, but are not limited to the following:

- Piping.
- Pump(s).
-

3.2 Plug log. The Contractor must keep a written record of all plugs put in any tank vents. A separate list must be kept for each tank being entered.

3.2.1 Ensure that all plugs are removed from each tank upon completion of work in the tank.

3.2.2 The plug log must be available to the Coast Guard Inspector when the inspector is performing his close-out inspection on each tank.

NOTE

Coast Guard personnel will operate all shipboard machinery and equipment.

3.3 Operational test, initial. Prior to commencement of work, the Contractor must witness Coast Guard personnel perform an initial operational test of all items or shipboard devices to be disturbed, used, repaired, or altered, to demonstrate existing operational condition. Submit a CFR.

3.4 Service disruption. When grey water is disrupted due to Contractor repairs, the Contractor must refer to SFLC Standard Spec 0000 par 3.2.11 to provide required temporary facilities.

3.5 Cleaning. The Contractor must accomplish the following for the tank(s) listed. The Contractor must refer to Coast Guard drawings 225B WLB 593-001 and 225B WLB 593-009 for guidance.

3.5.1 Content removal. Remove and dispose of all contents, fluids, and/or residues in accordance with all applicable Federal, state, and local regulations

3.5.2 Cleaning requirements. Remove manhole cover(s). Clean all tank structure's interior surfaces free of all foreign materials, sediment, and sludge. Remove all persistent residues, taking care not to damage the tank coating system. Remove cleaning media and residues continuously from the tank during the washing process. Remove any residual wash media and wipe up residual moisture with clean lint-free cloths. Collect, contain, and dispose of all wash media, residues, and cleaning materials in accordance with all Federal, state, and local regulations. Clean all tank vent lines. Remove and clean the eductors and level switches inside of the tank(s). Reinstall the eductors and level switches upon completion of tank cleaning. Use new gaskets and o-rings to install/reinstall all removed/disturbed components.

3.6 Inspection. The Contractor must visually inspect all interior surfaces, including, but not limited to bulkheads, floor and overhead plating, structural members, manhole cover surfaces, fasteners and gasket seating surfaces. Submit the "Tank and Void Assessment Form" via CFR (see paragraph 4.2 of the Work Item titled "General Requirements"). Electronic PDF version of this form will be furnished by the COR upon request. Include the following, as applicable:

- Tank structural condition.
- Inaccessible areas.
- Condition of tank coating, including measurements taken, percentage, location, and type of coating failure (not applicable for stainless steel tanks).
- Tank level indicator (TLI), vacuum and/or float switch condition.
- Suction and discharge piping and vent line condition.
- Fastener material (stainless steel) and condition.
- Zinc anode condition (remaining percentage).

3.7 Control panel assembly. The Contractor must open and vacuum clean the control panel assembly. Inspect the control panel assembly for any indications of overheating or loose wiring or connections. Submit a CFR

3.8 Closing. The Contractor must notify the COR at least 24 hours prior to closing the tank(s) and ensure tank closure is accomplished in the presence of the Coast Guard Inspector. After satisfactory inspection by the Coast Guard Inspector, and completion of all authorized repairs, close the manhole cover(s) with new gasket material conforming to ASTM D1330.

3.8.1 Renew up to 10% of nuts and washers.

3.8.1.2 Chase threads on studs to ensure even installation of the access covers. Renew any damaged or missing fasteners. Existing undamaged fasteners may be reused. For purpose of bid, assume 10% of existing fasteners will require renewal. Renew all nylon insert/nylock nuts.

NOTE

Coast Guard personnel will operate all shipboard machinery and equipment.

3.9 Operational test, post repairs. After completion of work, the Contractor must thoroughly test, in the presence of the Coast Guard Inspector and demonstrate all items or shipboard devices that have been disturbed, used, repaired, altered, or installed to be in satisfactory operating condition. Submit a CFR.

3.9.1 The Contractor must adjust the set point on each of the vacuum pressure switches (as applicable) to the set points noted previously.

3.9.2 The Contractor must verify operation of the low and high level switches/alarms and that the pumps cycle from lead to lag status during operation. Demonstrate proper operation of tank TLIs to prove satisfactory operating condition.

3.9.3 Upon completion of testing and, in the presence of the Coast Guard Inspector, the Contractor must pump tank(s) to the limit of the ship's installed pumps.

4. NOTES

This section is not applicable to this work item.

WORK ITEM 19: Sewage Holding Tanks, Clean and Inspect

1. SCOPE

1.1 Intent. This work item describes the requirements for the Contractor to clean and inspect the following tank(s):

TABLE 1 – TANKS

TYPE OF TANK	LOCATION	CAPACITY - 95% (Gallons)	LOW SUCTION (Gallons)
Sewage Holding Tank	4-82-2-W	1,772	50
Sewage Atmospheric Tank	4-82-0-E	600	20

1.2 Government-furnished property.

None.

2. REFERENCES

COAST GUARD DRAWINGS

Coast Guard Drawing 225B WLB 593-001, Rev D, Sewage and Waste Water System Diagram

Coast Guard Drawing 225B WLB 593-009, Rev B, Sewage Holding Tank

COAST GUARD PUBLICATIONS

Surface Forces Logistics Center Standard Specification 0000 (SFLC Std Spec 0000), 2022, General Requirements

OTHER REFERENCES

ASTM International (ASTM) D1330, 2015, Standard Specification for Rubber Sheet Gaskets

3. REQUIREMENTS

3.1 General.

3.1.1 CIR.

None.

3.1.2 Tech Rep.

Not applicable.

3.1.3 Protective measures. The Contractor must furnish and install all protective measures in accordance with SFLC Std Spec 0000, (Vessel component, space, and equipment protection).

3.1.3.1 Plug all inlet and outlet piping in the tank(s) to prevent contaminants from entering. Use plugs with an attached lanyard, ring or other system that will ensure plugs are not lost in the pipe openings.

3.1.4 Interferences. The Contractor must handle all interferences in accordance with SFLC Std Spec 0000, (Interferences). Known interferences include, but are not limited to the following:

- Piping.
- Pump(s).
-

3.2 Plug log. The Contractor must keep a written record of all plugs put in any tank vents. A separate list must be kept for each tank being entered.

3.2.1 Ensure that all plugs are removed from each tank upon completion of work in the tank.

3.2.2 The plug log must be available to the Coast Guard Inspector when the inspector is performing his close-out inspection on each tank.

NOTE

Coast Guard personnel will operate all shipboard machinery and equipment.

3.3 Operational test - initial. Prior to commencement of work, the Contractor must witness Coast Guard personnel perform an initial operational test of all items or shipboard devices to be disturbed, used, repaired, or altered, to demonstrate existing operational condition. Submit a CFR.

3.4 Service disruption. When sewage collection service is disrupted due to contractor repairs, the Contractor must refer to SFLC Standard Spec 0000 par 3.2.11 to provide required temporary facilities.

3.5 Cleaning and inspection requirements. The Contractor must accomplish the following for the tank(s) listed in paragraph 1.1 (Intent), referring to Coast Guard drawings 225B WLB 593-001 and 225B WLB 593-009 for guidance:

3.5.1 Content removal. Remove and dispose of all contents, fluids, and/or residues in accordance with all applicable Federal, state, and local regulations

3.5.2 Cleaning requirements. Remove manhole cover(s). Clean all tank structure's interior surfaces free of all foreign materials, sediment, and sludge. Remove all persistent residues, taking care not to damage the tank coating system. Remove cleaning media and residues continuously from the tank during the washing process. Remove any residual wash media and wipe up residual moisture with clean lint-free cloths.

Collect, contain, and dispose of all wash media, residues, and cleaning materials in accordance with all Federal, state, and local regulations. Clean all tank vent lines. Remove and clean the eductors and level switches inside of the tank(s). Reinstall the eductors and level switches upon completion of tank cleaning. Use new gaskets and o-rings to install/reinstall all removed/disturbed components.

3.5.3 Inspection. Visually inspect all interior surfaces, including, but not limited to bulkheads, floor and overhead plating, structural members, manhole cover surfaces, fasteners and gasket seating surfaces. Submit the "Tank and Void Assessment Form" via CFR (see paragraph 4.2 of the Work Item titled "General Requirements"). Electronic PDF version of this form will be furnished by the COR upon request. Include the following, as applicable:

- Tank structural condition.
- Inaccessible areas.
- Condition of tank coating, including measurements, percentage, location, and type of coating failure (not applicable for stainless steel tanks).
- Tank level indicator (TLI), vacuum and/or float switch condition.
- Suction and discharge piping and vent line condition.
- Fastener material (stainless steel) and condition.
- Zinc anode condition (remaining percentage).

3.5.4 Control panel assembly. Open and vacuum clean the control panel assembly. Inspect the control panel assembly for any indications of overheating or loose wiring or connections. Submit a CFR

3.6 Closing. The Contractor must notify the COR at least 24 hours prior to closing the tank(s) and ensure tank closure is accomplished in the presence of the Coast Guard Inspector. After satisfactory inspection by the Coast Guard Inspector, and completion of all authorized repairs, close the manhole cover(s) with new gasket material conforming to ASTM D1330.

3.6.1 The Contractor must renew up to 10% of nuts and washers.

3.6.1.2 Chase threads on studs to ensure even installation of the access covers. Renew any damaged or missing fasteners. Existing undamaged fasteners may be reused. For purpose of bid, assume 10% of existing fasteners will require renewal. Renew all nylon insert nuts.

NOTE

Coast Guard personnel will operate all shipboard machinery and equipment.

3.7 Operational test, post repairs. After completion of work, the Contractor must accomplish the following in the presence of the Coast Guard Inspector, and submit a CFR:

3.7.1 Adjust the set point on each of the vacuum pressure switches (as applicable) to the set points noted previously.

3.7.2 Verify operation of the low and high level switches/alarms and that the pumps cycle from lead to lag status during operation. Demonstrate proper operation of tank TLIs to prove satisfactory operating condition.

3.7.3 Upon completion of testing and, in the presence of the Coast Guard Inspector, pump tank(s) to the limit of the ship's installed pumps.

4. NOTES

4.1 Atmospheric tank. The atmospheric sewage tank is a standalone tank and is not a part of the ship's structure.

WORK ITEM 20: Sewage Piping, Clean and Flush

1. SCOPE

1.1 Intent. This work item describes the requirements for the Contractor to clean the sewage piping system.

1.2 Government-furnished property.

None.

2. REFERENCES

COAST GUARD DRAWINGS

Coast Guard Drawing 225B WLB 528-001, Rev G, Plumbing and Interior Deck Drains

Coast Guard Drawing 225B WLB 593-001, Rev E, Sewage and Waste Water System

COAST GUARD PUBLICATIONS

Surface Forces Logistics Center Standard Specification 0000 (SFLC Std Spec 0000), 2022, General Requirements

OTHER REFERENCES

ASTM International (ASTM) D1330, 2010, Standard Specification for Rubber Sheet Gaskets

3. REQUIREMENTS

3.1 General.

3.1.1 CIR.

None.

3.1.2 Tech Rep.

Not applicable.

3.1.3 Protective measures. The Contractor must furnish and install all protective measures in accordance with SFLC Std Spec 0000, paragraph 3.3.3 (Vessel component, space, and equipment protection).

3.1.4 Interferences. The Contractor must handle all interferences in accordance with SFLC Std Spec 0000, (Interferences). Known interferences include, but are not limited to the following:

- Sewage pumps
- Toilets

3.2 Contamination prevention. The Contractor must take all precautions to prevent contamination of personnel and spaces in accordance with all applicable Federal, state, and local regulations.

3.3 Personnel qualification. The Contractor must ensure that personnel accomplishing this work are qualified and experienced in operating the pressurized water system and handling the chemicals. For each operator/cleaning technician, submit documentation of applicable experience and training obtained within the last twelve months along with the Cleaning Plan.

NOTE

Coast Guard personnel will operate all shipboard machinery and equipment.

3.4 Operational test - initial. Prior to commencement of work, the Contractor must witness Coast Guard personnel perform an initial operational test of all items or shipboard devices to be disturbed, used, repaired, or altered, to demonstrate existing operational condition. Submit a CFR.

3.5 Cleaning plan. Submit the written plan for chemical cleaning to the COR before work is to commence. The procedure must include products to be used, safety precautions, disposal requirements, sequence of events, etc. Submit a MSDS to the COR for all chemicals proposed for use. Changes to the chemical cleaning plan as written, need to be approved by the COR (and Facilities).

CAUTION

Although the Coast Guard prefers pressurized water as the cleaning fluid, the Contractor may propose chemical cleaning as an alternative, providing that the proposed chemical cleaning agent is environmentally safe, suitable for use in marine sewage piping application, and pre-approved by the COR.

The chemicals used in the cleaning (including cleaning chemicals, neutralizing compounds, and defoaming chemicals) must not cause any significant detrimental effects to the sewage piping system or any other system components Due to the fact that system piping has historically been difficult to clean by pressure washing only, chemical cleaning is usually required to successfully complete the cleaning process.

3.5.1 Procedure requirements. The Contractor must ensure that the procedure includes the following:

- Methods of cleaning.
- All safety precautions required during cleaning operations.
- List of qualified personnel who will operate machinery or handle chemicals (see paragraph 3.3 (Personnel qualification) herein).
- Locations in the sewage piping where cleaning will take place, and any additional fittings necessary.

- Sequence of each location that ensures all piping sections will be cleaned and all foreign debris removed.

3.5.2 Plan submittal. The Contractor must submit the written plan to the COR for approval at least 96 hours prior to commencing cleaning operations. Changes to the chemical cleaning plan as written, need to be approved by the COR (and local Facilities).

3.6 Clean and flush. The Contractor must clean and flush approximately 1,400 linear feet of sewage system piping, shown on Coast Guard Drawings 225B WLB 593-001 and 225B WLB 528-001.

3.6.1 Pumps and valves. Replace system tank valve(s) with temporary spool piece(s) before cleaning. Visually inspect system pumps and valve(s); and submit a CFR. Upon completion of work, reinstall the removed tank valve(s) with new gaskets.

3.6.2 Cleaning. Continue cleaning until all of the following conditions are met:

- All visible calcium carbonate deposits, solid deposits and build-up are removed from pipe walls.
- Discharge water from the piping being cleaned is free of all visible scale and deposits.

3.6.3 Inspect the piping interior using a borescope in the presence of the COR, to verify that all solid deposits visible to the unmagnified eye have been removed. Continue the cleaning process until all visible solid deposits are removed from the pipe walls.

3.6.4 Flush twice the volume of the system cleaned with water to include 3 repeated pH tests between 6 and 8. The flushing water shall be collected and disposed by the Contractor.

3.7 Waste disposal. The Contractor must dispose of all cleaning fluids and debris in accordance with all applicable Federal, state, and local regulations. Remove all unused chemicals from USCG property immediately upon completion of work item. Do not drain any fluids (including fresh water) into any space, bilge, or exterior location.

3.8 Gasket renewal. The Contractor must reinstall all removed valves and fittings with new gasket material conforming to ASTM D1330.

NOTE

Coast Guard personnel will operate all shipboard machinery and equipment.

3.9 Operational test – post repairs. After completion of work, the Contractor must thoroughly test, in the presence of the Coast Guard Inspector and demonstrate all items or shipboard devices that have been disturbed, used, repaired, altered, or installed to be in satisfactory operating condition. Submit a CFR.

3.9.1 Leak test. After all system components are reinstalled, the Contractor must test all disturbed piping for leaks, as follows, and submit a CFR:

- Plug all system openings (except the highest) and fill system with water to the point of overflow. Ensure that the water level does not go down (without adding any water) for sufficient time to inspect the entire system (no less than 15 minutes).
- Closely monitor the system for leaks. Repair all leaks detected.

- Repeat test and inspection until no leaks are detected.

4. NOTES

This section is not applicable to this work item.

WORK ITEM 21: Tanks, Grey Water Holding, Preserve, Partial

1. SCOPE

1.1 Intent. This work item describes the requirements for the Contractor to prepare and preserve the following tank(s):

TABLE 1 – TANKS

TYPE OF TANK	LOCATION	CAPACITY - 95% (Gallons)	LOW SUCTION (Gallons)	% OF TANK COATING REPAIR
Grey Water	4-82-2-W	2,798	25	33
Grey Water	4-48-1-W	11,264	50	33
Grey Water	4-48-2-W	11,264	50	33

1.2 Government-furnished property.

None.

2. REFERENCES

COAST GUARD DRAWINGS

Coast Guard Drawing 225B WLB 593-001, Rev D, Sewage and Waste Water System Diagram

Coast Guard Drawing 225B WLB 593-009, Rev B, Sewage Holding Tank

COAST GUARD PUBLICATIONS

Surface Forces Logistics Center Standard Specification 0000 (SFLC Std Spec 0000), 2022, General Requirements

Surface Forces Logistics Center Standard Specification 6310 (SFLC Std Spec 6310), 2022, Requirements for Preservation of Ship Structures

Surface Forces Logistics Center Standard Specification 8636 (SFLC Std Spec 8636), 2022, Temporary Hull Accesses

OTHER REFERENCES

None

3. REQUIREMENTS

3.1 General.

3.1.1 CIR.

None.

3.1.2 Tech Rep.

Not applicable.

3.1.3 Protective measures. The Contractor must furnish and install all protective measures in accordance with SFLC Std Spec 0000, paragraph 3.3.3 (Vessel component, space, and equipment protection).

3.1.3.1 The Contractor must plug all inlet and outlet piping in the tank(s) to prevent contaminants from entering. Use plugs with an attached lanyard, ring or other system that will ensure plugs are not lost in the pipe openings. Maintain a plug accountability log outside the tank to prevent any of the installed temporary plugs from being lost inside the tank or forgotten inside at tank closure. Submit this log to the COR after completion of work item.

3.1.4 Interferences. The Contractor shall handle all interferences in accordance with SFLC Std Spec 0000, paragraph 3.3.5 (Interferences). Known interferences include, but are not limited to the below-listed:

- Piping.
- Pump(s).
-

3.2 Temporary access openings. Due to limited access to work areas, the Contractor may, with express permission of the KO (via submission of a CFR), cut access holes to facilitate accomplishment of the work specified herein. Perform all work required to open and close the access openings in accordance with SFLC Std Spec 8636.

NOTE

Requirements for tank opening and closing, content disposal, and inspection are covered in the clean and inspect item.

3.3 Substrate inspection. After completion surface preparation and before coating application, the Contractor must perform a visual inspection of the prepared substrate, and submit a CFR.

3.4 Surface preservation. The Contractor must accomplish the following tasks for the tanks listed in paragraph 1.1 (Intent):

3.4.1 Remove and retain the tank manhole cover(s).

3.4.2 The Contractor must prepare and coat the designated tank interior surfaces, using the system specified for "Tanks and Voids (Grey Water, Sewage, and CHT Tanks), Option II", in SFLC Std Spec 6310, Appendix B (Cutters and Boat Interior Paint Systems).

NOTES

1. A profile suitable for over coating would be similar to what is produced by abrading the coating with 100-grit paper.

3.4.2.1 The Contractor must prepare all surfaces identified for preservation in accordance with SFLC Std Spec 6310, paragraph 3.1.13, Touch-ups and minor coating repairs.

NOTE

Surfaces being preserved are considered "critical-coated surfaces".

3.5 In-process quality control. The Contractor must abide by all the safety, preservation, and quality control requirements specified in SFLC Std Spec 0000, paragraph 3.2.4.2 (In-process QC measures for "critical-coated surfaces).

4. NOTES

This section is not applicable to this work item.

WORK ITEM 22: Tanks (Sewage Holding), Preserve, Partial

1. SCOPE

1.1 Intent. This work item describes the requirements for the Contractor to prepare and preserve the following tank(s):

TABLE 1 – TANKS

TYPE OF TANK	LOCATION	CAPACITY - 95% (Gallons)	LOW SUCTION (Gallons)	% OF TANK COATING REPAIR
Sewage Holding	4-82-2-W	1,772	50	33
Sewage Atmospheric	4-82-0-E	600	600	33

1.2 Government-furnished property.

None.

2. REFERENCES

COAST GUARD DRAWINGS

Coast Guard Drawing 225B WLB 593-001, Rev D, Sewage and Waste Water System Diagram

Coast Guard Drawing 225B WLB 593-009, Rev B, Sewage Holding Tank

COAST GUARD PUBLICATIONS

Surface Forces Logistics Center Standard Specification 0000 (SFLC Std Spec 0000), 2022, General Requirements

Surface Forces Logistics Center Standard Specification 6310 (SFLC Std Spec 6310), 2022, Requirements for Preservation of Ship Structures

Surface Forces Logistics Center Standard Specification 8636 (SFLC Std Spec 8636), 2022, Temporary Hull Accesses

OTHER REFERENCES

None

3. REQUIREMENTS

3.1 General.

3.1.1 CIR.

None.

3.1.2 Tech Rep.

Not applicable.

3.1.3 Protective measures. The Contractor must furnish and install all protective measures in accordance with SFLC Std Spec 0000, paragraph 3.3.3 (Vessel component, space, and equipment protection).

3.1.3.1 The Contractor must plug all inlet and outlet piping in the tank(s) to prevent contaminants from entering. Use plugs with an attached lanyard, ring or other system that will ensure plugs are not lost in the pipe openings. Maintain a plug accountability log outside the tank to prevent any of the installed temporary plugs from being lost inside the tank or forgotten inside at tank closure. Submit this log to the COR after completion of work item.

3.1.4 Interferences. The Contractor shall handle all interferences in accordance with SFLC Std Spec 0000, paragraph 3.3.5 (Interferences). Known interferences include, but are not limited to the below-listed:

- Piping.
- Pump(s).
-

3.2 Temporary access openings. Due to limited access to work areas, the Contractor may, with express permission of the KO (via submission of a CFR), cut access holes to facilitate accomplishment of the work specified herein. Perform all work required to open and close the access openings in accordance with SFLC Std Spec 8636.

NOTE

Requirements for tank opening and closing, content disposal, and inspection are covered in the clean and inspect item.

3.3 Substrate inspection. After completion surface preparation and before coating application, the Contractor must perform a visual inspection of the prepared substrate, and submit a CFR.

3.4 Surface preservation. The Contractor must accomplish the following tasks for the tanks listed in paragraph 1.1 (Intent):

3.4.1 Remove and retain the tank manhole cover(s).

3.4.2 The Contractor must prepare and coat the designated tank interior surfaces, using the system specified for "Tanks and Voids (Grey Water, Sewage, and CHT Tanks), Option II", in SFLC Std Spec 6310, Appendix B (Cutters and Boat Interior Paint Systems).

NOTES

1. A profile suitable for over coating would be similar to what is produced by abrading the coating with 100-grit paper.

3.4.2.1 The Contractor must prepare all surfaces identified for preservation in accordance with SFLC Std Spec 6310, paragraph 3.1.13, Touch-ups and minor coating repairs.

NOTE

Surfaces being preserved are considered "critical-coated surfaces".

3.5 In-process quality control. The Contractor must abide by all the safety, preservation, and quality control requirements specified in SFLC Std Spec 0000, paragraph 3.2.4.2 (In-process QC measures for "critical-coated surfaces).

4. NOTES

This section is not applicable to this work item.

WORK ITEM 23: SORS Cargo Rail Remove

1. SCOPE

1.1 Intent. This work item describes the requirements for the Contractor to rip out the rail system in the Spilled Oil Recovery System (SORS) cargo hold.

1.2 Government-furnished property.

None.

2. REFERENCES

COAST GUARD DRAWINGS

Coast Guard Drawing 225-WLB-597-020, Rev B, SORS Hold Stowage and Rail System

Coast Guard Drawing 225B-WLB-597-051, Rev A, SORS Hold Stowage and Handling Fittings

COAST GUARD PUBLICATIONS

Surface Forces Logistics Center Standard Specification 0000 (SFLC Std Spec 0000), 2022, General Requirements

Surface Forces Logistics Center Standard Specification 0740 (SFLC Std Spec 0740), 2022, Welding and Allied Processes

Surface Forces Logistics Center Standard Specification 6310 (SFLC Std Spec 6310), 2022, Requirements for Preservation of Ship Structures

OTHER REFERENCES

None.

3. REQUIREMENTS

3.1 General. The intent of this work item is to rip out the rail system in the SORS cargo hold.

3.1.1 CIR.

None.

3.1.2 Tech Rep.

Not applicable.

3.1.3 Protective measures. The Contractor must furnish and install all protective measures in accordance with SFLC Std Spec 0000, paragraph 3.3.3 (Vessel component, space, and equipment protection).

3.1.4 Interferences. The Contractor must handle all interferences in accordance with SFLC Std Spec 0000, paragraph 3.3.5 (Interferences). Known interferences include, but are not limited to the following:

- Hangers
- Staircase

3.2 Removal. The Contractor must remove and dispose of all rails, strongbacks, foundations, and padeyes in accordance with Coast Guard Drawings 225-WLB-597-020 and 225B-WLB-597-051, as applicable.

3.2.1 Cut and remove the following support rails from the deck and grind remaining surfaces flush to deck.

- Forward Skimmer Stowage Crate Support Rail
- Aft Skimmer Stowage Crate Support Rail
- Forward FSB Container Support Rail
- Aft FSB Container Support Rail

3.2.2 Cut and remove the following from the deck and grind remaining surfaces flush to deck.

- Strongback for Skimmer Stowage Crate
- Strongback for FSB Stowage Container
- Centerline Padeye for FSB Container Lashing
- Outboard Padeye for FSB Container Lashing

3.2.2 Cut and remove the following, if existing, from the deck and grind remaining surfaces flush to deck.

- Centerline Padeye for Skimmer Cage Lashing
- Outboard Padeye for Skimmer Cage Lashing

3.3. Modification. Stencil hold deck load rating of 138 lbs/square foot on aft and forward bulkheads in 4” text.

3.4 Gas freeing. When entering a tank, compartment, confined space, or conducting hot work, refer to and comply with SFLC Std Spec 0000, General Requirements.

3.5 Touch-up preservation. The Contractor must prepare and coat all new and disturbed surfaces to match existing adjacent surfaces in accordance with SFLC Std Spec 6310, (Touch-ups and minor coating repairs.)

3.6 Material disposal. The Contractor shall dispose of all removed material not designated for reinstallation in accordance with all Federal, State, and Local requirements.

4. NOTES

This section is not applicable to this work item.

WORK ITEM 24: Tanks, Potable Water, Preserve, Partial,

1. SCOPE

1.1 Intent. This work item describes the requirements for the Contractor to prepare and coat a portion of the surfaces of the following tank(s) as designated:

TABLE 1 - TANKS

TYPE OF TANK	LOCATION	CAPACITY - 95% (GALLONS)	% OF TANK COATING REPAIR	LOW SUCTION (GALLONS)
Potable Water	2-25-1-W	4,028	33	80
Potable Water	2-25-2-W	4,028	33	80

1.2 Government-furnished property.

None.

2. REFERENCES

COAST GUARD DRAWINGS

Coast Guard Drawing 225B WLB 601-001, Rev F, General Arrangement Inboard & Outboard Profiles

COAST GUARD PUBLICATIONS

Surface Forces Logistics Center Standard Specification 0000 (SFLC Std Spec 0000), 2022, General Requirements

Surface Forces Logistics Center Standard Specification 6310 (SFLC Std Spec 6310), 2022, Requirements for Preservation of Ship Structures

Surface Forces Logistics Center Standard Specification 8636 (SFLC Std Spec 8636), 2022, Temporary Hull Accesses

OTHER REFERENCES

American National Standards Institute/NSF International (ANSI/NSF) 61, 2008, Drinking Water System Components - Health Effects

American National Standards Institute/American Water Works Association (ANSI/AWWA) C652, 2011, Disinfection of Water-Storage Facilities

3. REQUIREMENTS

3.1 General. The Contractor must refer to Coast Guard Drawing 225B WLB 601-001 for guidance.

3.1.1 CIR.

None.

3.1.2 Tech Rep.

Not applicable.

3.1.3 Protective measures. The Contractor must furnish and install all protective measures in accordance with SFLC Std Spec 0000, paragraph 3.3.3 (Vessel component, space, and equipment protection).

3.1.4 Interferences. The Contractor must handle all interferences in accordance with SFLC Std Spec 0000, paragraph 3.3.5 (Interferences).

3.2 Temporary access openings. With express permission of the KO via submission of a CFR and in accordance with SFLC Std Spec 8636, the Contractor may perform all work required to cut open and close temporary access openings to facilitate accomplishment of the work specified herein.

3.3 In-process quality control measures. The Contractor must abide by all the safety, preservation, and quality control requirements specified in SFLC Std Spec 0000, paragraph 3.2.4.2 (In-process QC measures for “critical-coated surfaces”). Surfaces being preserved are considered “critical-coated surfaces”.

3.5 Surface preservation. The Contractor must remove and retain the tank manhole cover(s). Prepare and coat the designated tank interior surfaces, using the system specified for "Tanks and Voids (Potable Water Tanks)" in SFLC Std Spec 6310, Appendix B (Cutter and Boat Interior Painting Systems). Power tool clean all affected surfaces to “bare metal”, in lieu of using abrasive blasting; and feather edges of existing intact coating to the prepared areas, in order to provide a smooth transition with the new paint. Select finish/top coat color to match existing adjacent surfaces.

3.5.1 The Contractor must ensure heated air is used if necessary to maintain the proper temperature during application and cure. Ventilation must be a continuous airflow with a minimum of one complete air change every four (4) hours.

3.5.2 The Contractor must ensure tanks are cured in accordance with the manufacturer’s instructions for NSF/NEHC certification under the same conditions before being filled.

NOTE

Typical curing times are at least 7 days, and range up to 14 days or longer, depending on the paint selected, amount of surface area covered, and environmental conditions. See paint manufacturer's recommendations for specific application.

CAUTION

Verify application and cure requirements with paint manufacturer prior to paint purchase and application. Lack of attention to environmental conditions can adversely impact paint system cure, cause unnecessary contract time delays, and negatively impact crew health and vessel habitability when tanks are put back into service.

DO NOT assume paint Product Data Sheet to be accurate. Contact paint manufacturer directly to verify, as formulations change and new application information may be available.

3.5.3 The Contractor must ensure freshly painted potable water tanks are rinsed at least twice with freshwater before being disinfected and put into service.

4. NOTES

This section is not applicable to this work item.

WORK ITEM 25: Temporary Services, Provide - Cutter

1. SCOPE

1.1 Intent. This work item describes the requirements for the Contractor to provide temporary services to the Cutter, during the performance of this availability.

1.2 Government-furnished property.

None.

2. REFERENCES

COAST GUARD DRAWINGS

None

COAST GUARD PUBLICATIONS

Surface Forces Logistics Center Standard Specification 0000 (SFLC Std Spec 0000), 2022, General Requirements

Surface Forces Logistics Center Standard Specification 8635 (SFLC Std Spec 8635), 2022, Temporary Services

OTHER REFERENCES

None

3. REQUIREMENTS

3.1 General.

3.1.1 CIR.

None.

3.1.2 Tech Rep.

Not applicable.

3.1.3 Protective measures. The Contractor must furnish and install all protective measures in accordance with SFLC Std Spec 0000, paragraph 3.3.3 (Vessel component, space, and equipment protection).

3.1.4 Interferences. The Contractor must handle all interferences in accordance with SFLC Std Spec 0000, paragraph 3.3.5 (Interferences).

3.2 Temporary service particulars. The Contractor must provide the below listed temporary services, in accordance with SFLC Std Spec 8635.

TABLE 1 - SERVICE SELECTION

*SUB-PARAGRAPH	TITLE	Y/N
3.3.1	Office space	N
3.3.2	Telephone and internet access	N
3.3.3	Parking	Y
3.3.4	Duty section berthing: 04 male, 04 female. Duty section berthing must be provided for during disruption of berthing areas	Y
3.3.5	Electrical power (including all requirements in associated sub-paragraphs)	Y
3.3.6	Hull grounding straps (not applicable when cutter is waterborne)	N
3.3.7	Compressed air (including all requirements in associated sub-paragraphs)	N
3.3.8	Hazardous material/hazardous waste disposal (see Tables 2 and 3 below)	Y
3.3.9	Heavy lift equipment: 40 hours	Y
3.3.10	Water supply	
3.3.10.1	Potable water: 3000 gallons per day, at 60 psig.	Y
3.3.10.2	Hot-circulating water	N
3.3.10.3	Cooling water	Y
3.3.10.4	Firemain system (including all requirements in associated sub-paragraphs) **NOTE** Firemain manifolds and hoses must be able to reach lower compartments of ships. **NOTE** Previous Alaska Area availabilities have experienced issues related to firemain and other hoses freezing pier side. Contractor should take all applicable steps to prevent this. Lapses of fire protection at any time due to foreseeable freezing will reflect on the contractor and may incur additional costs or requirements; subject to all applicable laws and regulations.	Y
3.3.11	Steam (including all requirements in associated sub-paragraphs)	N
3.3.12	Refuse disposal	Y
3.3.13	Sewage and grey water disposal (including all requirements in associated sub-paragraphs)	Y
3.3.14	Storage – General (including all requirements in associated sub-paragraphs):	
3.3.14	Dry stores.	N
3.3.14	Paint and flammable stores.	N
3.3.14	Refrigerated stores.	Y
3.3.15	Small boat storage (including all requirements in associated sub-paragraphs)	Y

***Each sub-paragraph number relates directly to the identical sub-paragraph number in SFLC Std Spec 8635.**

TABLE 2 - HAZARDOUS WASTE DISPOSAL – LIQUIDS (GALLONS)

PAINT THINNERS	ENGINE COOLANT	BILGE WATER
Xx	xx	xx

TABLE 3 - HAZARDOUS WASTE DISPOSAL – SOLIDS

OILY FILTERS	OILY RAGS (LBS)	EMPTY 1-GAL CONTAINER*	EMPTY 5-GAL CONTAINER*	EMPTY 55-GAL CONTAINER*

xx	xx	xx	xx	xx

***Previously housed hazardous materials.**

3.2 Extended temporary services. If the performance period of the contract is extended by the KO, the contractor must continue to provide all temporary services as specified herein for the extension period.

4. NOTES

This section is not applicable to this work item.

WORK ITEM 26: Steering System PLC, Upgrade

1. SCOPE

1.1 Intent. This work item describes the requirements for the Contractor to replace and program the steering system PLCs in accordance with Original Equipment Manufacturer (OEM) guidance.

1.2 Government-furnished property.

MTI	ITEM DESCRIPTION	NSN/PN	QTY	ESTIMATED COST ($/UNIT)
N	Siemens CPU 1214	NSN: 7042-01-693-4330 PN: 6ES7214-1AG40-0XB0	2 ea.	400.00
N	Siemens Memory Card, S7-1200, 4MB	NSN: 7050-12-414-4763 PN: 6ES7954-8LC03-0AA0	2 ea.	60.00
N	Siemens Expansion Module, S7-1200, 8 DI, 8 DO	NSN: 5998-01-693-4347 PN: 6ES7223-1BH32-0XB0	2 ea.	255.00

***Government-loaned property, which shall be returned to the vessel upon completion of the availability.**
****New or refurbished equipment that the Government may provide for installation in place of existing equipment.**
*****Government-furnished property, which is to be supplied by either the vessel or the C4IT Service Center.**

2. REFERENCES

COAST GUARD DRAWINGS

Coast Guard Drawing (CGDWG) 225-WLB-561-202, Rev B, JAN 2021, Steering Control Wiring Diagram

COAST GUARD PUBLICATIONS

Coast Guard Technical Publication (CGTP) 3555, SWBS 561, Section A, Jan 2021, Steering Gear System- Model 990192-1

Surface Forces Logistics Center Standard Specification 0000 (SFLC Std Spec 0000), 2020, General Requirements

Surface Forces Logistics Center Standard Specification 3041 (SFLC Std Spec 3041), 2020, Shipboard Electrical Cable Test

Surface Forces Logistics Center Standard Specification 3042 (SFLC Std Spec 3042), 2020, Shipboard Electrical Cable Removal, Relocation, Splice, Repair, and Installation

OTHER REFERENCES

None

3. REQUIREMENTS

3.1 General.

3.1.1 CIR. The Contractor shall submit a CIR for the inspections listed in the following paragraph(s):

- 3.5 Acceptance testing

3.1.2 Tech Rep. The Contractor shall provide the services of a Qualified Technical Representative who is familiar with Siemens PLCs and equipped with a laptop loaded with Siemens STEP 7 development software (version 14 or higher) and a communication cable to accomplish the following on site:

- Advise on manufacturer's proprietary system information.
- Assist with the following installation and repair method(s): remove old PLC and installing new PLC, load software to Siemens PLC/CPU 1219, connect all cable/wire, and test the Steering Gear System.
- Ensure compliance with manufacturer's procedures and standards during system disassembly, inspection, and reassembly as applicable.

3.1.2.1 Ensure the Tech Rep has experience with the system/equipment stated above and demonstrated on their résumé.

3.1.2.2 Submit the name and résumé of the Tech Rep to the COR at the Arrival Conference.

3.1.3 Protective measures. The Contractor shall furnish and install all protective coverings to seal off and protect all non-affected vessel's components, equipment, and spaces near the work area against contamination during the performance of work. Upon completion of work, the Contractor shall remove all installed protective measures, inspect for the presence of contamination, and return all contaminated equipment, components, and spaces to original condition of cleanliness.

3.1.4 Interferences. The Contractor shall handle all interferences in accordance with SFLC Std Spec 0000, paragraph 3.3.5 (Interferences).

3.1.5 Electrical work. The Contractor must accomplish all electrical work in accordance with SFLC Std Spec 3042, and test cables in accordance with SFLC Std Spec 3041. Utilize the existing wire ways for new cable runs as much as possible.

3.2 Removal. The Contractor shall disconnect and remove both the existing PLCs, Allen Bradley Model SLC-150.

3.2.1 Parts to be removed. Remove the Steering Processor Units (piece 18) and Memory Modules (piece 19) shown on sheet 26 of drawing CG DWG 225-WLB-561-202.

3.2.2 Check wiring. Ensure all wire leads into the PLC are labeled as they will be reused on the replacement PLC. If labels are missing, add them in accordance with SFLC Std Spec 3042.

3.2.3 Disconnect and dispose. Disconnect Steering Processor Units and Memory Modules and dispose of them in accordance with local ordinances.

3.3 Installation. The Contractor shall install new Siemens model PLCs and reconnect existing wire leads in accordance with sheets 26A, 27A, and 29A of CG DWG 225-WLB-561-202.

3.4 Program and Configure. The Contractor shall program the replacement Siemens PLC using the Siemens development STEP 7 software and configuration files provided by the Government. After installing the software, the replacement Siemens PLCs have to be set in "Run" mode to test Steering Gear system.

3.5 Acceptance testing. The Contractor shall thoroughly test the steering controls and ensure the system is fully operational. Submit a CIR.

3.5.1 Determine success. In the presence of a Government representative, test all probable steering changes and configurations. The system passes testing when tests are completed with no errors or unexplained behavior.

3.5.2 In event of failure. In the event errors or unexplained behavior are encountered, a system groom by the OEM may be required. Submit a CFR recommending that Recurring Work Item (RWI) 56110_RAD_0121_225WLB be authorized.

4. NOTES

This section is not applicable to this work item.

WORK ITEM 27: Thruster Motor, Replace

1. SCOPE

1.1 Intent. This work item describes the requirements for the Contractor to remove the existing thruster motors onboard 225' WLB B-Class assets and install new replacement motors.

1.2 Government-furnished property.

MTI	ITEM DESCRIPTION	NSN/PN	QTY	ESTIMATED COST ($/UNIT)
Y	Thruster Motor, DC	NSN: 6105-01-687-0855	2 ea.	97,200.00
Y	Thruster Motor, Blower	NSN: 6105-01-461-8718	2 ea.	623.29
Y	Coupling, Shaft, Assembly	NSN: 3040-01-F23-6730	2 ea.	25,900.00

***Government-loaned property, which must be returned to the vessel upon completion of the availability.**
****New or refurbished equipment that the Government may provide for installation in place of existing equipment.**
*****Government-furnished property, which is to be supplied by either the vessel or the C4IT Service Center.**

2. REFERENCES

COAST GUARD DRAWINGS

Coast Guard Drawing (DWG) 225B-WLB-180-011, Rev B, Bow & Stern Thruster

Coast Guard Drawing (DWG) 225B-WLB-201-2, Rev D, Access Removal Routes

Coast Guard Drawing (DWG) 225B-WLB-320-1, Rev AK, Electrical One Line Diagram

Coast Guard Drawing (DWG) 225B-WLB-437-3, Rev D, Thruster Control System Block & Elem Wrg Diag Modifications

Coast Guard Drawing (DWG) 225B-WLB-568-001, Rev B, Bow Thruster A & D

Coast Guard Drawing (DWG) 225B-WLB-568-002, Rev B, Stern Thruster Arrangement and Detail

Coast Guard Drawing (DWG) 225B-WLB-74-5, Rev A, Guideline for Field Cut Penetrations

NAVSEA Drawing 803-1385866, Rev E, Penetration, Bulkhead and Deck

COAST GUARD PUBLICATIONS

Coast Guard Technical Publication (TP) 3556, SWBS 568, Section A, Feb 2021, Bow and Stern Thrusters

Surface Forces Logistics Center Standard Specification 0000 (SFLC Std Spec 0000), 2022, General Requirements

Surface Forces Logistics Center Standard Specification (SFLC Std Spec) 2351, 2022, Overhaul DC Generators & Motors

Surface Forces Logistics Center Standard Specification 6310 (SFLC Std Spec 6310), 2022, Requirements for Preservation of Ship Structures

OTHER REFERENCES

MIL-STD-2003, Sep 2009, Electric Plant Installation Standard Methods for Surface Ships and Submarines (Cable)

3. REQUIREMENTS

3.1 General.

3.1.1 CIR. None.

3.1.2 Tech Rep. The Contractor must provide the services of a Qualified Technical Representative who is familiar with DC thruster motors and employed by a shop that is a member of the Electrical Apparatus Service Association (EASA) and adheres to the association's standards, including ANSI/EASA AR100. The Tech Rep will accomplish the following on site:

- Advise on manufacturer's proprietary system information.
- Assist with the installation method(s).
- Ensure compliance with manufacturer's procedures and standards during system disassembly, inspection, and reassembly as applicable.

3.1.2.1 Ensure the Tech Rep has experience with the system/equipment stated above and demonstrated on their résumé.

3.1.2.2 Submit the name and résumé of the Tech Rep to the COR at the Arrival Conference.

3.1.3 Protective measures. The Contractor must furnish and install all protective measures in accordance with SFLC Std Spec 0000, (Vessel component, space, and equipment protection).

3.1.4 Interferences. The Contractor must handle all interferences in accordance with SFLC Std Spec 0000, (Interferences). Known interferences include, but are not limited to the following:

- Piping
- Steel deckplates
- Electrical wiring
- Piping
- Removable ladder

3.2 Removal. The Contractor must remove the motors or assemblies in accordance with Section A.2.1 of Appendix A of SFLC Std Spec 2351.

3.2.1 Dispose of removed motors in accordance with all applicable Federal, state, and local regulations.

3.3 Preparation. The Contractor must prepare and execute modifications to the ship and new motor upon receipt, prior to installation onboard the asset.

3.3.1 Motor. The Contractor must perform the following work in accordance with all SWBS 320, 437, and 568 references cited in this Work Item:

- Verify existing coupling type is in accordance with original B class configuration (jaw type). If the coupling type deviates from class configuration, submit a CFR.
- Short terminals S1 and S2 together.
- Remove motor control box and double the depth to allow room for cable connections during the install.
- Remove all external boxes and blower motor in order to transit through the vessel.
- Inspect the existing drive shaft. The flex half may be reused if it is in good condition and the coupling sleeve fits correctly. Submit a CFR.

3.3.1.1 Convert to continuous gear couplings. The existing jaw coupling is taller and as such utilizes a shorter driveshaft. Renew with GFE Driveshaft assembly (NSN 3040-01-F23-6730). The new driveshaft assembly will have raw stock bore dimensions on the areas to be fitted to the pinion/motor. Couplings will have to be machined to achieve .0018”-.0037” interference fit to the motor/pinion and keyways cut/fitted with approximately .0001”-.002” width clearance to the keyway and .015” to .030” top clearance.

3.3.1.2 If the drive shaft flex half is renewed, the same fit tolerances apply and the new coupling will have to be bored to match the driveshaft. The thruster driveshaft keyway is likely standard/imperial. The motor shaft keyway is metric/25mm. Drill/Tap coupling keyways for a set setscrew (utilize existing set screw coupling location as reference).

3.3.1.3 Always verify the pinion coupling half (Lowest coupling half in the arrangement) is a fixed coupling half.

3.3.1.4 Drill/Tap new coupling keyways for a set setscrew (utilize existing set screw coupling location as reference).

3.3.2 Structural. The Contractor must perform the following work in accordance with all SWBS 74, 180, and 201 references cited in this Work Item:

- Modify the outboard handrail in the Bow Thruster space (4-12-0-E), remove a foundation, and add cross members as needed.
- In the stern thruster space: Cut aft section of the deck and add a flat bar combing around cut out.
- Add two piece of 3” x 3” x ¼” x 24” long angle for added support on port and starboard side of the existing foundation.

3.3.3 Other. The Contractor must:

- Provide new installation hardware as it will vary from those used with the previous motor.

3.3 Installation. The Contractor must install the new motors in accordance with Section A.2.2 of Appendix A of SFLC Std Spec 2351. See drawings 225B-WLB-568-001, 225B-WLB-568-002, and 225-WLB-568-202.

3.3.1 Bulkhead and deck penetrations, furnish and installation. The Contractor must furnish and install all bulkhead and deck penetrations in accordance with procedures and notes shown on NAVSEA Drawing 803-1385866 and MIL-STD-2003.

3.3.2 Connect positive leads to bus A1 and negative leads to bus A2.

3.4 Final acceptance testing. The Contractor must accomplish the final acceptance tests of Section A.2.3 of Appendix A of SFLC Std Spec 2351.

4. NOTES

This section is not applicable to this work item.

FIGURE 1. THRUSTER MOTOR

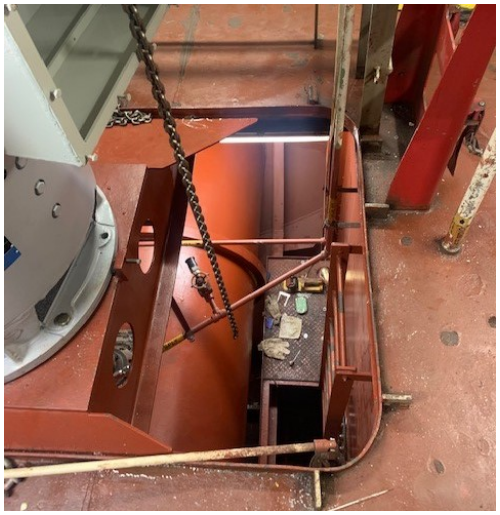

FIGURE 2. DECKPLATE AND CROSSBEAMS

FIGURE 3. RAILING

FIGURE 4. STERN THRUSTER MOTOR

WORK ITEM 28: Compartment Deck, Preserve

1. SCOPE

1.1 Intent. This work item describes the requirements for the Contractor to preserve Compartment decks, approximately 836 square-feet (SQFT).

1.2 Government-furnished property.

None.

2. REFERENCES

COAST GUARD DRAWINGS

Coast Guard Drawing 225B-WLB 601-01, Rev J, General Arr Inboard and Outboard Profiles

Coast Guard Drawing 225B-WLB 631-02, Rev G, Painting Schedule

COAST GUARD PUBLICATIONS

Surface Forces Logistics Center Standard Specification 0000 (SFLC Std Spec 0000), 2022, General Requirements

Surface Forces Logistics Center Standard Specification 6310 (SFLC Std Spec 6310), 2022, Requirements for Preservation of Ship Structures

Surface Forces Logistics Center Standard Specification 0740 (SFLC Std Spec 0740), 2022, Welding and Allied Processes

OTHER REFERENCES

The Society for Protective Coatings (SSPC) Surface Preparation Specification No.11 (SSPC-SP 11), 2013, Power Tool Cleaning to Bare Metal

3. REQUIREMENTS

3.1 General.

3.1.1 CIR. The Contractor shall submit a CIR for the inspections listed in the following paragraph(s):

- 3.3 (Substrate inspection).

3.1.2 Technical Representative.

Not applicable.

3.1.3 Protective measures. The Contractor shall furnish and install all protective coverings to seal off and protect all non-affected vessel's components, equipment, and spaces near the work area against contamination during the performance of work. Upon completion of work, the Contractor shall remove all installed protective measures, inspect for the presence of contamination, and return all contaminated equipment, components, and spaces to original condition of cleanliness.

3.1.4 Interferences. The Contractor shall handle all interferences in accordance with SFLC Std Spec 0000, paragraph 3.3.5 (Interferences). Known interferences include, but are not limited to the following:

- Insulation.
- Deck equipment, pumps and piping.
- Lockers, benches and Vidmars.
- Deck grating.
- Fan and vent ducts.
- Hand rail and stanchions.

3.2 Surface preservation, 100% interior. The Contractor must perform 100% preservation (or Partial Preservation, as noted) in accordance with SFLC Std Spec 6310, Appendix B (Cutter and Boat Interior Painting Systems) on the following interior surfaces:

- Thruster Machinery Room, upper-level deck, 360 SQFT (approx.)
  - Survival Suit Locker (02-75-2-Q) and (02-75-1-Q) decks, 96-SQFT (approx.).
  - AMR (4-82-0-E) deck “Partial Preservation” not to exceed 100-SQFT.
  - ATON Shop (1-21-2-Q) and ATON Storeroom (1-16-4-A) decks, “Partial Preservation” not to exceed 100-SQFT
  - SORS Cargo hold (3-39-0-AA) deck and bulkheads, “Partial Preservation” not to exceed 180-SQFT
  - 836-SQFT Total.

3.2.1 Preparation method. The Contractor must prepare interior surfaces using SSPC-SP 11.

3.2.2 Coating method. The Contractor must apply finish/top coat color to interior surfaces as follows: match existing adjacent surfaces.

3.3 Substrate inspection. Upon completion of surface preparation and prior to application of primer coat the Contractor must perform a visual inspection of the prepared surfaces; submit a CFR.

4. NOTES

This section is not applicable to this work item.

WORK ITEM 29: Air Conditioning Unit Foundations, AMR, Preserve

1. SCOPE

1.1 Intent. This work item describes the requirements for the Contractor to preserve the foundations of the two chilled water air conditioning plants in the Auxiliary Machinery Room (4-82-0-E), AC-1 and AC-2.

1.2 Government-furnished property.

None.

2. REFERENCES

COAST GUARD DRAWINGS

Coast Guard Drawing 225B-WLB-180-005, Rev G, Foundations Hull Block 940

Coast Guard Drawing 225B-WLB-185-010, Rev D, Foundations to Suit Chiller Unit Installation Incidental to MMA

Coast Guard Drawing 225B-WLB-201-001, Rev D, Machinery Spaces Arrangement

Coast Guard Drawing 225B-WLB-514-008, Rev A, MMA Chilled Water System Diagram

Coast Guard Drawing 225B-WLB-514-009, Rev A, MMA Chilled Water System A&D Below Main Deck

COAST GUARD PUBLICATIONS

Coast Guard Technical Publication (TP) 10996, Manufacturers Instruction Book-SWBS Group(s) 514, Section A, Chilled Water Air Conditioning Plant – Model AMC-334-2Q – Installation & Operating Manual

Surface Forces Logistics Center Standard Specification 0000 (SFLC Std Spec 0000), 2022, General Requirements

Surface Forces Logistics Center Standard Specification 0740 (SFLC Std Spec 0740), 2022, Welding and Allied Processes

Surface Forces Logistics Center Standard Specification 6310 (SFLC Std Spec 6310), 2022, Requirements for Preservation of Ship Structures

OTHER REFERENCES

None

3. REQUIREMENTS

3.1 General.

3.1.1 CIR.
None.

3.1.2 Tech Rep.

Not applicable.

3.1.3 Protective measures. The Contractor must furnish and install all protective coverings to seal off and protect all non-affected vessel's components, equipment, and spaces near the work area against contamination during the performance of work. Upon completion of work, the Contractor must remove all installed protective measures, inspect for the presence of contamination, and return all contaminated equipment, components, and spaces to original condition of cleanliness.

3.1.4 Interferences. The Contractor must handle all interferences in accordance with SFLC Std Spec 0000, paragraph 3.3.5 (Interferences).

3.2 Surface preservation. The Contractor must clean, prepare, and coat the designated equipment foundation surfaces, including all adjacent structural members, using the system specified for “Bilges, Cofferdams, and Forepeaks, Steel”, in SFLC Std Spec 6310, Appendix B (Cutter and Boat Interior Painting Systems). Select the following:

- Option II system.
- Top /finish coat color: Red (20152)

WARNING

Abrasive-blasting is not permissible in a machinery spaces.

4. NOTES

This section is not applicable to this work item.

WORK ITEM 30: Shower Pan Renew

1. SCOPE

1.1 Intent. This work item describes the requirements for the Contractor to inspect and reseal or renew the shower pan deck covering with a polymeric deck covering system (MIL-PRF-24613, Type III, Epoxy).

1.2 Government-furnished property.

None.

2. APPLICABLE DOCUMENTS

COAST GUARD DRAWINGS

Coast Guard Drawing 225B-WLB 801-15, Rev B, Scantlings, Decks & Platforms

Coast Guard Drawing 225B-WLB 634-1, Rev F, Deck Covering Schedule

Coast Guard Drawing 225B-WLB 644-1, Rev D, Sanitary & Laundry Spaces & Arrgt & Details

Coast Guard Drawing 225B-WLB 528-8, Rev D Plumbing & Deck Drains A/D, Fr 76, Fwd Abv Mn Dk, Block 960a

Coast Guard Drawing 225B-WLB 528-9, Rev C, Plumbing & Deck Drains A/D, FR-76, Aft Abv Mn Dk, Block 970

Coast Guard Drawing 225B-WLB 532-13, Rev B, Potable Water System A/D, FR-76, Aft Abv Mn Dk

COAST GUARD PUBLICATIONS

Surface Forces Logistics Center Standard Specification 0000 (SFLC Std Spec 0000), 2022, General Requirements

Surface Forces Logistics Center Standard Specification 0740 (SFLC Std Spec 0740), 2022, Welding and Allied Processes

Surface Forces Logistics Center Standard Specification 6341 (SFLC Std Spec 6341), 2022, Install New Deck Covering Systems

Surface Forces Logistics Center Standard Specification 6310 (SFLC Std Spec 6310), 2022, Preserve Ship Structures

OTHER REFERENCES

MIL-A-46106, Jun 1992, Adhesive-Sealants, Silicone, Rtv, One-Component

MIL-D-18873, Jul 1982, Deck Covering Magnesia Aggregate Mixture

MIL-D-23134, Jul 1999, Deck Underlay and Covering, Insulating, Magnesia Aggregate Mixture

MIL-D-21631, Dec 1990, Deck Covering, Latex Concrete

MIL-PRF-3135, Nov 1986, Deck Covering Underlay Materials

MIL-PRF-24613, Dec 1990, Deck Covering Materials, Interior, Cosmetic Polymeric

MIL-STD-1689, Nov 1990, Fabrication, Welding and Inspection of Ships Structure

Naval Ship's Technical Manual (NSTM) Chapter 634, Dec 2001, Deck Covering

The Society for Protective Coatings (SSPC) Surface Preparation Specification No.11 (SSPC-SP 11), 2013, Power Tool Cleaning to Bare Metal

3. REQUIREMENTS

3.1 General.

3.1.1 CIR.

None.

3.1.2 Technical Representative.

Not applicable.

3.1.3 Protective measures. The Contractor must furnish and install suitable covering to seal off and protect all non-affected surfaces/equipment and spaces in the vicinity of the work area against contamination during the performance of work. Upon completion of work, remove protective material and inspect for the presence of contamination. Clean all equipment and spaces, contaminated due to improper protection, to original condition of cleanliness.

3.1.4 Interferences. The Contractor must be aware that interferences in way of work include, but are not limited to what is listed in Table I below. Handle all interferences in accordance with SFLC Std Spec 0000, (Interferences):

- Deck drains
- Shower enclosures.
- Piping.
- Plumbing boxes.
- Showerheads.

3.2 Shower pan renew particulars. The Contractor must perform all tasks specified in SFLC Std Spec 6341 and herein, to install a new covering system in the location(s) specified in Table I below.

TABLE I - DECKING SYSTEM PARTICULARS

LOCATION	AREA (*SQFT)	DECK MTL (A/S**)	SYSTEM/APPENDIX (SFLC STD SPEC 6341)	***COVE BASE	SYSTEM COLOR	UNDERLAYMENT REQUIREMENT
Crews Head (1-98-1-L) Shower Pan	9	S	Cosmetic Polymeric Epoxy Resin, Type III (One-Step Epoxy System)/Appendix A	Y	See 3.4.2.6	Renew existing underlayment.
Crews Head (1-96-1-L) Shower Pan	9	S	Cosmetic Polymeric Epoxy Resin, Type III (One-Step Epoxy System)/Appendix A	Y	See 3.4.2.6	Renew existing underlayment.
Crews Head (1-82-1-L) Shower Pan	9	S	Cosmetic Polymeric Epoxy Resin, Type III (One-Step Epoxy System)/Appendix A	Y	See 3.4.2.6	Renew existing underlayment.
Crews Head (1-97-4-4-L) Shower Pan	9	S	Cosmetic Polymeric Epoxy Resin, Type III (One-Step Epoxy System)/Appendix A	Y	See 3.4.2.6	Renew existing underlayment.
CPO Head (01-57-4-L) Shower Pan	9	S	Cosmetic Polymeric Epoxy Resin, Type III (One-Step Epoxy System)/Appendix A	Y	See 3.4.2.6	Renew existing underlayment.
Total	**45**					

***Approximated.**
****Note: A = Aluminum; S = Steel.**
*****See SFLC Std Spec 6341 for definition of cove base.**

3.2.1 Temporarily remove the shower enclosures (stalls) and overheads. Ensure deck drains are not damaged in the process. Set aside the shower stalls and overhead panels for reuse.

NOTE:

ALL showers in a given space get restored at once. The spaces vary with one, two or three shower configurations.

3.2.2 Renewal. Remove and scrap approximately (5) existing shower pan deck covering systems from the shower stalls taking care not to disturb surrounding layers or materials. Disposal must be in accordance with all local, state, and federal laws and regulations.

3.2.2.1 Power tool clean to bare metal all steel decks in the work areas in accordance with SSPC-SP 11.

3.2.2.2 Surfaces must be completely free of corrosion products, mill scale, dirt, oil, grease, moisture, deteriorated paint, and other surface contaminants.

3.2.2.3 Prior to priming deck surfaces, in the presence of the Coast Guard Inspector, visually inspect, the expose deck surfaces, piping and drains for corrosion and damage. If severe deck corrosion is present, perform a UT inspection of the affected areas (approximately 100 shots total) in accordance with SFLC Std Spec 0740, to determine the boundary of sound material. Chalk out the boundary of the corroded

plating where the remaining thicknesses are less than 75% of the original thickness as shown on Coast Guard Drawing 225B-WLB 801-15 and submit a CFR.

3.2.4.4 Prior to installing new underlay in the shower stall area, prime and paint the deck with one coat of primer and two (2) coats of paint. Follow guidance given in SFLC Std Spec 6341.

3.2.4.5 Install underlay material on the deck in the shower stalls conforming to MIL-PRF-3135 in accordance with SFLC Std Spec 634, NSTM Chapter 634 and Manufacturer's Instruction. Slope the underlayment to the deck drain and ensure that the underlayment provides adequate support for the shower pan.

3.2.4.6 Install polymeric deck covering system in the work areas in accordance with SFLC Std Spec 6341. Polymeric system must conform to MIL-PRF-24613, Type III, Epoxy. Known manufacturers of this product include;

AMERICAN HI-TECH FLOORING COMPANY
952 Norfolk Square Norfolk, Virginia 23502
Phone: (800) 436-6501; Fax: (757) 466-1219.

Color must be chosen by the cutter, here are some choices:
http://www.hitechflooring.com/epoxy_flooring_colors.shtml.

3.2.4.7 Install cove base molding in accordance with SFLC Std Spec 6341.

3.2.5 Sealing requirements. The Contractor must accomplish the following tasks to seal the shower pans:

3.2.5.1 Thoroughly clean deck covering surfaces with a suitable cleaning detergent conforming to MIL-D-16791, and hot water.

3.2.5.2 Rinse, clean, and dry the deck surfaces until no residue is visible.

3.2.5.3 Lightly sand with No. 0 steel wool or No. 60 sandpaper, or mechanically sand the surfaces, to remove the existing sealer coat; avoid damaging the color coating. Vacuum thoroughly to remove dust.

3.2.5.4 Thoroughly seal the deck covering system with a minimum of two coats of a suitable sealer, in accordance with the deck covering system manufacturer's recommendations (see 4.1 (sealer particulars)). Allow sealer to cure for the amount of time recommended by the manufacturer. Keep traffic off deck until sealer is cured.

NOTE

The sealing process is complete when the deck has a uniform appearance i.e., when the surface film is continuous and free of blotchy areas. Sealer coats must be installed as thin as possible while still coating the entire surface so that a slip resistant orange peel effect is present on the finished surface.

3.2.6 Caulk all edges of decking after deck covering has cured to prevent water intrusion under deck.

3.2.7 The Contractor must reinstall shower stall partitions, sheathing, towel bars and soap dishes in accordance with Coast Guard Drawings 225B-WLB 644-1 and SFLC Std Spec 0740. Use all new stainless steel fasteners, Type 316, in accordance with 225B-WLB 644-1. Caulk all seams with a silicone based caulking in accordance with MIL-A-46106

3.3 Touch-up preservation. The Contractor must prepare and coat all new and disturbed exterior and interior surfaces to match existing adjacent surfaces, in accordance with SFLC Std Spec 6310, Appendix A (Cutter and Boat Exterior Painting Systems) and Appendix B (Cutter and Boat Interior Painting Systems), respectively, and as applicable.

4. NOTES

4.1 Sealer particulars. Sealer for designated deck covering system(s) may be procured from the deck covering system's manufacturer. Authorized suppliers for latex terrazzo systems are listed on the Qualified Product Listing (QPL) 3134 for MIL-D-3134. Authorized suppliers for cosmetic polymeric deck covering systems are listed on the Qualified Product Listing (QPL) 24613 for MIL-PRF-24613.

WORK ITEM 31: Sewage Piping, Renew

1. SCOPE

1.1 Intent. This work item describes the requirements for the Contractor to renew approximately two feet of 90/10 CuNi pipe in crew stateroom 01-86-1-L.

1.2 Government-furnished property.

None.

2. REFERENCES

COAST GUARD DRAWINGS

Coast Guard Drawing 225B WLB 505-1, Rev D, General Requirements for Piping Systems

Coast Guard Drawing 225B WLB 593-1, Rev E, Sewage and Waste Water System Diagram

COAST GUARD PUBLICATIONS

Surface Forces Logistics Center Standard Specification 0000 (SFLC Std Spec 0000), 2022, General Requirements

Surface Forces Logistics Center Standard Specification 0740 (SFLC Std Spec 0740), 2022, Welding and Allied Processes

Surface Forces Logistics Center Standard Specification 6310 (SFLC Std Spec 6310), 2022, Requirements for Preservation of Ship Structures

OTHER REFERENCES

None.

3. REQUIREMENTS

3.1 General.

3.1.1 CIR.

None.

3.1.2 Tech Rep.

Not applicable.

3.1.3 Protective measures. The Contractor must furnish and install all protective measures in accordance with SFLC Std Spec 0000, paragraph 3.3.3 (Vessel component, space, and equipment protection).

3.1.4 Interferences. The Contractor must handle all interferences in accordance with SFLC Std Spec 0000, paragraph 3.3.5 (Interferences).

3.1.5 Confined or enclosed space entry and hot work. Prior to hot work the Contractor must open, ventilate, and clean all spaces and components necessary to accomplish this work item as required to certify them as "SAFE FOR PERSONNEL" and/or "SAFE FOR HOT WORK." In accordance with SFLC Std Spec 0000, paragraph 3.3.1.2 (Confined or enclosed space entry and hot work). Marine Chemist Certification must be obtained prior to commencement of work and maintained throughout the duration of work.

3.1.6 Welding, testing and inspection. All welding must be in accordance with SFLC Std Spec 0740. All compartment/boundary testing and NDE must be in accordance with SFLC Std Spec 0740, Appendix C.

3.2 Renewals. The Contractor must renew approximately two (2) feet of 90/10 CuNi pipe in crew stateroom 01-86-1-L in accordance with SFLC Std Spec 0000, SFLC Std Spec 0740, and Coast Guard drawings 225B WLB 593-1, and 225B WLB 505-1.

3.3 Sewage System Handling Precautionary Measures. The work of this item presents a number of hazards, including risks of infectious disease transmittal and Hydrogen Sulfide asphyxiation/explosion. The following precautions must be observed.

3.3.1 Notify the Cutter's Commanding officer prior to opening any sewage piping.

3.3.2 When performing maintenance which requires disassembly of sewage equipment or when contact with sewage/black water is possible, rubber gloves, rubber boots, eye/faceshields and coveralls (disposable articles acceptable) must be worn. Before beginning maintenance, several plastic laundry-size bags must be brought to the maintenance area. Upon completion of maintenance, the area and components must be washed down with hot potable water and detergent and rinsed with seawater or fresh water. Personnel must then move from the immediate maintenance area and remove protective clothing. Protective clothing must then be placed in the plastic bags, with rubber boots and gloves going in one bag, and protective clothing going in another bag. Rubber boots and gloves must be washed in hot potable water and detergent, and must be rinsed with an iodine, phenol, or hypochlorite disinfectant solution, prior to re-use. Fabric protective clothing may receive normal laundering, disposable coveralls must be discarded. In no case must maintenance personnel walk through living, eating, working, or any manned spaces still wearing protective clothing, boots, or gloves. Before leaving the maintenance area, personnel must thoroughly wash hands, lower arms, and face, in that order, with hot water and soap using the wash-up facilities provided in the area.

3.3.3 In the event spaces become contaminated with sewage/black water as a result of leaks, spills, or sewage system backflow, the space must be evacuated immediately and the cutter's Commanding Officer notified of the spill. The spill area must be secured from traffic, and a Marine Chemist must test the area to ensure that the atmosphere is within acceptable limits. A safety watch with respiratory protection or a Supplied Air Respirator/Self-Contained Breathing Apparatus (SAR/SCBA) or air-line mask must be posted at the compartment access during cleanup. The spilled sewage/black water must then be removed or washed down. Respiratory protection must be used if the atmosphere is not within acceptable limits. If the atmosphere is within acceptable limits, cleanup may be accomplished without respiratory protection; however, respiratory protection must be kept on hand during the cleanup. The area must be recertified as

gas free at least every two (2) hours and every hour for ambient temperatures above 32.2° C (90° F) or more frequently if deemed necessary by the Marine Chemist. The need for temporary ventilation must be determined by the Marine Chemist. A final washdown must be accomplished with hot, potable water and stock detergent. In addition, food service spaces, berthing areas, and medical spaces must be treated with an an iodine, phenol, or hypochlorite disinfectant.

3.3.4 Personnel working in sewage/black water spaces or on sewage/black water system equipment must not smoke, eat, or drink before a thorough wash up with hot water and soap.

3.3.5 Bilges contaminated with sewage/black water must be pumped out, washed down with fresh water, and pumped out again.

3.3.6 All fluid that drains from the affected sewage piping system must be cleaned up and removed within 1 hour of draining. Any fluid that drains on the cutter's decks must be cleaned up and removed immediately. The Contractor must drain and dispose of all residual fluids in the piping system in accordance with all Federal, state, and local rules and regulations.

NOTE

Couplings may be required as well as replacement of wye/y.

3.4 Removal and Installation. Remove the sections of sewage piping as designated by the CG Inspector. Dispose of removed piping in accordance with all Federal, state, and local rules and regulations.

3.4.1 Install temporary caps or plugs to the open piping upon removal to prevent system/components and surrounding area from contamination.

3.4.2 Inspect the surrounding piping for signs of deterioration and/or corrosion. Submit a CFR.

3.4.3 Renew all designated sections of 90/10 CuNi sewage piping.

3.5 Pipe flushing. After all authorized work is completed; the Contractor must accomplish the following:

NOTE

Piping may need to be chemically cleaned if brazing is conducted for repair option.

3.5.1 Flush all new and disturbed piping with clean fresh water for five minutes, or until all debris is removed, whichever occurs first.

3.5.2 Ensure that flushing fluid is directed to move scale and foreign debris away from installed machinery to prevent possible damage upon operational testing.

3.5.3 Submit a CFR documenting date and time of flushing process, and verification of piping cleanliness.

3.5.4 Dispose of flushing fluid in accordance with all applicable Federal, state, and local regulations.

NOTE

Do not drain any fluids, including fresh water, into any space, bilge, or exterior location.

3.6 Hydrostatic test. After all authorized repairs, the Contractor must hydrostatically test all new and disturbed piping and components of the sewage piping system in accordance with SFLC Std Spec 0740, Appendix C, "Hydrostatic Test". Ensure zero leakage from or permanent deformation of pressure-containing parts by repairing all leaks, deformations, and discrepancies. Submit a CFR.

NOTE

Coast Guard personnel will operate all shipboard machinery and equipment.

3.7 Operational test, post repairs. After completion of work, the Contractor must thoroughly test, in the presence of the Coast Guard Inspector and demonstrate all items or shipboard devices that have been disturbed, used, repaired, altered, or installed to be in satisfactory operating condition. Submit a CFR.

3.8 Touch-up preservation. The Contractor must prepare and coat all new and disturbed surfaces to match existing adjacent surfaces in accordance with SFLC Std Spec 6310, (Touch-ups and minor coating repairs).

4. NOTES

This section is not applicable to this work item.

WORK ITEM 32: Deck Covering (Carpeting), Renew

1. SCOPE

1.1 Intent. This work item describes the requirements for the Contractor to renew carpeting deck covering.

1.2 Government-furnished property.

None.

2. REFERENCES

COAST GUARD DRAWINGS

Coast Guard Drawing 225B-WLB 601-01, Rev P, General Arr Inboard and Outboard Profiles

Coast Guard Drawing 225B-WLB 634-01, Rev F, Deck Cover Schedule

COAST GUARD PUBLICATIONS

Surface Forces Logistics Center Standard Specification 6341 (SFLC Std Spec 6341), 2022, Install New Deck Covering Systems

OTHER REFERENCES

Federal Specification (Fed Spec) DDD-C-95, Mar 1972, Carpets and Rugs, Wool, Nylon, Acrylic, Modacrylic

MIL-STD-1623, Dec 1981, Fire Performance Requirements and Approved Specifications for Interior Finish Materials and Furnishings

3. REQUIREMENTS

3.1 General.

3.1.1 CIR. None.

3.1.2 Technical Representative. Not applicable.

3.1.3 Protective measures. The Contractor must furnish and install suitable covering to seal off and protect all non-affected surfaces/equipment and spaces in the vicinity of the work area against contamination during the performance of work. Upon completion of work, remove protective material

and inspect for the presence of contamination. Clean all equipment and spaces, contaminated due to improper protection, to original condition of cleanliness.

3.1.4 Interferences. The Contractor must handle all interferences in accordance with SFLC Std Spec 0000, paragraph 3.3.5 (Interferences). Known interferences include, but are not limited to the following:

- Stateroom and wardroom furnishings.

3.2 Deck covering installation particulars. The Contractor must perform all tasks specified in SFLC Std Spec 6341, Appendix E (Carpeting), and herein, to install a new deck covering system in the location(s) specified in Table I below.

TABLE I - DECKING SYSTEM PARTICULARS

LOCATION	AREA (*SQFT)	DECK MTL (A/S**)	COVE BASE	UNDERLAYMENT REQUIREMENT
CO Stateroom (02-57-1-L)	120	S	Yes: __ No : __	New: X Retain Existing: __ Insulating __ None:_____
CO Cabin (02-57-0-L)	216	S		New: X Retain Existing: __ Insulating __ None: _____
Officers Stateroom (02-57-4-L)	106	S		New: Retain Existing: __ Insulating __ None: X
Officers Stateroom (02-69-4-L)	120	S		New: Retain Existing: __ Insulating __ None: X
Officers Stateroom (02-69-1-L)	120	S		New: Retain Existing: __ Insulating __ None: X
CPO Stateroom (01-74-2-L)	100	S		New: Retain Existing: __ Insulating __ None: X
CPO Wardroom (01-57-0-L)	300	S		New: Retain Existing: __ Insulating __ None: X

Crews Stateroom (1-96-0-L)	120	S		New: X Retain Existing: __ Insulating __ None: _____
Total	**1202**			

***Approximated.**
****Note: A = Aluminum; S = Steel**

3.3 Visual inspection. The Contractor must perform a visual inspection of all exposed deck surfaces, prior to priming deck surfaces and submit a CFR.

3.4 Carpeting requirements. The Contractor must procure carpeting of the following construction type, for installation:

Single Level Loop Pile (42 Oz. Per Sq. Yd. Pile)

3.4 Deck covering color. The Contractor must submit a deck covering color chart to Coast Guard Inspector, for the purpose of color selection.

4. NOTES

4.1 Sources for carpeting procurement. Carpeting meeting the requirements specified in SFLC Std Spec 6341, Appendix E may be procured from the following sources:

NAME	CONTACT INFORMATION
Marine Carpet Sales	803-254-9970 *http://www.marinecarpetsales.com/marine-carpet-products.cfm*
Continental Flooring Company	(800) 825-1221; (410) 750-2614
Don Freeman	(410) 336.2403
Fleming and Sheely	(410) 483-5350
Professional Carpet Sales and Interiors	(800) 845-6106

WORK ITEM 33: Focsle Kickpipe Stuffing Tube, Renewal.

1. SCOPE

1.1 Intent. This work item describes the requirements to replace and renew the electric cable Kickpipe stuffing tube located at the forward most Forecastle under Jackstaff of CGC FIR (WLM213).

1.2 Government-furnished property.

None.

2. REFERENCES

COAST GUARD DRAWINGS

Coast Guard Drawing 225B WLB_601_002, Rev. Y, Booklet Of General Drawings

Coast Guard Drawing 225-WLB _320_1, Rev AT, Electrical One-Line Diagram

Coast Guard Drawing 225B-WLB_330_002, Rev M, Lighting System Forward of FR. 30 Hill Block 910/901

Coast Guard Drawing 225B-WLB_330_007, Rev T, Lighting System 02 Level & Above Hull Block 960B/975 & 970 Partial

COAST GUARD PUBLICATIONS

Surface Forces Logistics Center Standard Specification (SFLC Std Spec) 0000, 2022, General Requirements

Surface Forces Logistics Center Standard Specification (SFLC Std Spec) 0740, 2022, Welding and Allied Processes

Surface Forces Logistics Center Standard Specification (SFLC Std Spec) 3041, 2022, Shipboard Electrical Cable Test

Surface Forces Logistics Center Standard Specification (SFLC Std Spec) 3042, 2022, Shipboard Electrical Cable Removal, Relocation, Splice, Repair, and Installation

Surface Forces Logistics Center Standard Specification (SFLC Std Spec) 6310, 2022, Requirements for Preservation of Ship Structures

OTHER REFERENCES

MIL-STD-2003-3A, Sep 2009, Electric Plant Installation Standard Methods for Surface Ships & Submarines (Penetrations)

Mil-S-24235/9E, 1992, Stuffing Tubes, Metal, And Packing Assemblies For Electric Cables, Brass and Steel, for Decks and Bulkhead With Pipe Protection.

MIL-I-3064, Mar 1991, Insulation, Electrical, Plastic-Sealer

Mil-DTL-24643/15, Power and Lighting, Watertight, Circuit Integrity

3. REQUIREMENTS

3.1 General.

3.1.1 CIR.

None.

3.1.2 Tech Rep.

Not applicable.

3.1.3 Protective measures. The Contractor must furnish and install all protective measures in accordance with SFLC Std Spec 0000, paragraph 3.3.3 (Vessel component, space, and equipment protection).

3.1.4 Interferences. The Contractor must handle all interferences in accordance with SFLC Std Spec 0000, paragraph 3.3.5 (Interferences). Known interferences include, but are not limited to the following:

- Installed wiring

3.1.5 Welding. Perform all welding and nondestructive inspections in accordance with SFLC Std Spec 0740. The patched welding plate shall be the same material and thickness of the deck.

3.2 Cable removal. Disconnect the cable at connection points as listed in Table I below per Section 3.3 of SFLC Std Spec 3042. The affected circuit is shown on Coast Guard Drawings 225-WLB_320_001, Sh. 9, (L11), 225B-WLB_330_002, _330_007 and _601_002 Pull each disconnected cable listed in Table I through the jackstaff and coil out of the way. Protect exposed cable ends, jacks, receptacles, and connectors from water and foreign material intrusion. See Figures 1, 2, 3 and 4.

3.3 Stuffing tubes. Crop out the stuffing tube and replace with the new kickpipe or swage tube of standard or extra heavy wall thickness with like material. Select, space, and install tubes in accordance with MIL-STD-2003-3. Use the installation method of Figure 3D1 (kickpipe and stuffing tube) or 3D2 (swage tube) in Appendix D, welding both sides of the deck plating.

NOTES

A-Team/APM: Make sure to check with the Cutter for the cable size as listed on TABLES I is correct to comply with the proper stuffing tube and Packing Assembly on TABLE II in according with MIL-2003-3A and Mil-S-24235/9E.

3.4 Cable reinstallation. Reinstall and reconnect the cables listed below in Table I per Section 3.3 of SFLC Std Spec 3042. All stuffing tube packing materials shall be new and not older than manufacturer's recommended shelf life. Defer any installation of plastic sealer until after testing of Section 3.5 below is completed.

3.5 Testing. For each stuffing tube and associated circuit, ensure that the following tests are performed:

3.5.1 The cable insulation resistance test of SFLC Std Spec 3041, as directed by SFLC Std Spec 3042, paragraph 3.3.9.

3.5.2 The water hose test of Appendix C of SFLC Std Spec 0740, as directed by SFLC Std Spec 3042, paragraph 3.3.10, to verify that the plating patch or cable packing and stuffing tube welds are watertight.

3.5.3 The post installation operational test, as directed by SFLC Std Spec 0000, paragraph 3.3.5.1.

3.6 Touch-up preservation. Prepare and coat all new and disturbed exterior and interior surfaces to match existing adjacent surfaces in accordance with SFLC Std Spec 6310.

3.7 Plastic sealer. After satisfactory completion of testing, apply plastic sealer electrical insulation (MIL-I-3064, Type HF) if required by the installation method of MIL-STD-2003-3 used to install the stuffing tube.

TABLE I – KICKPIPE AND STUFFING TUBE INSTALLATION LIST

CIRCUIT IDENTIFIER	FUNCTION	DISCONNECTION POINT	CABLE TYPE	SWAGE TUBE SIZE	DECK	FRAME	SIDE
(03-67-2)-1L-B, (DWGS 225-WLB_-320_1, 225B-WLB_330_2,__7)	MOST FWD DECK LIGHTS & FLOOD LIGHTS	CONENCTION BOX (CB)	LSDSGS-9	C (.544)	01	0	PORT

4. NOTES

4.1 The following stuffing and swage tube data is provided for information:

TABLE II – STUFFING TUBE DATA

CABLE		KICKPIPE SIZE	MILITARY PART NUMBER		
TYPE	MAXIMUM DIAMETER (MILS)		STEEL STUFFING TUBE ASSEMBLY*	STEEL DECK [BULKHEAD] SWAGE TUBE ASSEMBLY*	PREFORMED PACKING ASSEMBLY
LS3SJ14	370	3/8– 18 NPT	M24235/9-121	M24235/17-061 [M24235/17-001	M16685-2IA
LS2SJ-14	350	3/8– 18 NPT	M24235/9-121	M24235/17-061 [M24235/17-001	M16685-2IA
LSDSGS-9 (D9)	544	3/4 -14 NPT	M24235/9-123	M24235/17-063	M16685-2IC

* A tube assembly consists of the tube body, gland nut, and gland ring. Order packing separately.

4.2 Followings are various photos of cable location.

FIGURE 1. FORWARD MOST FOSLE KICKPIPES.

FIGURE 2. CLOSE LOOK - CORRODED KICKPIPE.

(03-67-2)
1L-B

FIGURE 3. KICKPIPE CABLE ID.

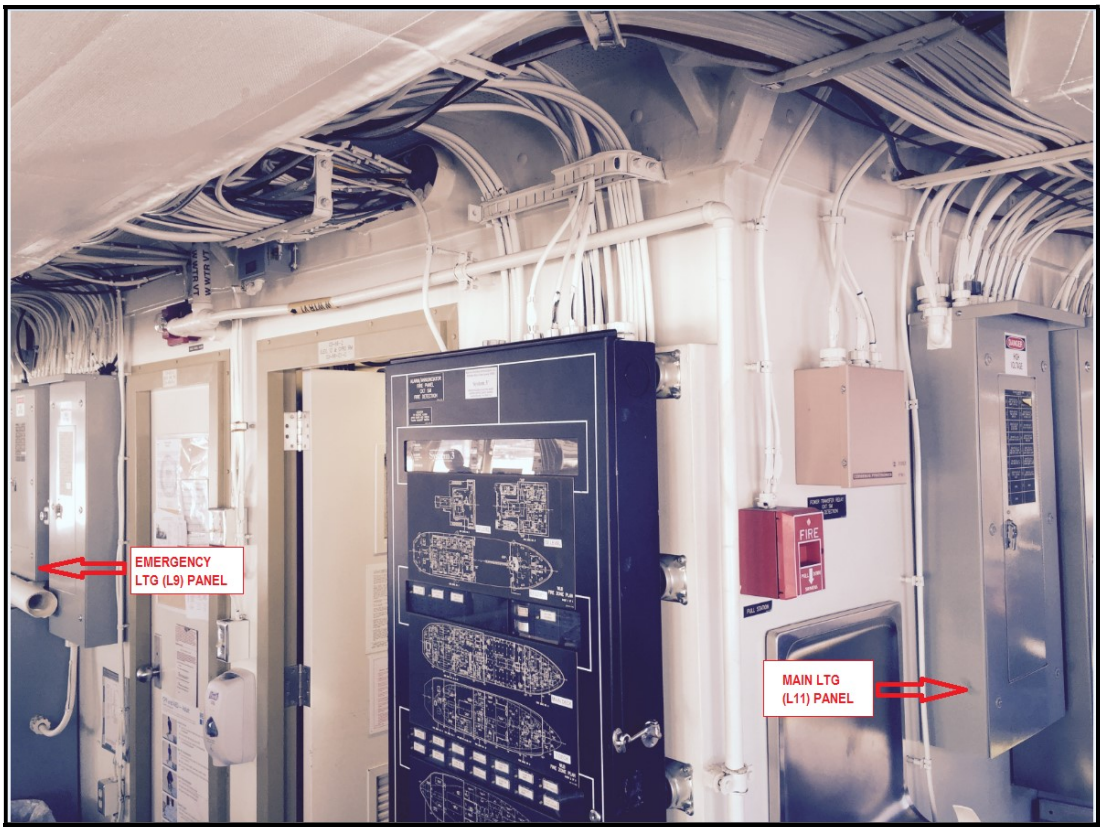

FIGURE 4. PILOTHOUSE (L11) 120 VAC POWER PANEL (WLB 216).

WORK ITEM 34: Foc'sle Deck, Preserve

1. SCOPE

1.1 Intent. This work item describes the requirements for the Contractor to preserve the Foc'sle deck.

1.2 Government-furnished property.

None.

2. REFERENCES

COAST GUARD DRAWINGS

Coast Guard Drawing 225B-WLB 601-01, Rev J, General Arr Inboard and Outboard Profiles

Coast Guard Drawing 225B-WLB 631-02, Rev G, Painting Schedule

COAST GUARD PUBLICATIONS

Surface Forces Logistics Center Standard Specification 0000 (SFLC Std Spec 0000), 2022, General Requirements

Surface Forces Logistics Center Standard Specification 6310 (SFLC Std Spec 6310), 2022, Requirements for Preservation of Ship Structures

Surface Forces Logistics Center Standard Specification 0740 (SFLC Std Spec 0740), 2022, Welding and Allied Processes

OTHER REFERENCES

The Society for Protective Coatings (SSPC) Surface Preparation Specification No.11 (SSPC-SP 11), 2013, Power Tool Cleaning to Bare Metal

3. REQUIREMENTS

3.1 General.

3.1.1 CIR. The Contractor shall submit a CIR for the inspections listed in the following paragraph(s):

- 3.3 (Substrate inspection).

3.1.2 Technical Representative.

Not applicable.

3.1.3 Protective measures. The Contractor shall furnish and install all protective coverings to seal off and protect all non-affected vessel's components, equipment, and spaces near the work area against contamination during the performance of work. Upon completion of work, the Contractor shall remove all installed protective measures, inspect for the presence of contamination, and return all contaminated equipment, components, and spaces to original condition of cleanliness.

3.1.4 Interferences. The Contractor shall handle all interferences in accordance with SFLC Std Spec 0000, paragraph 3.3.5 (Interferences). Known interferences include, but are not limited to the following:

- Deck equipment.
- Anchor chain.
- Vents, overflows, sounding tube and piping.
- Hatches, chocks and bitts.

3.2 Surface preservation, 100% interior. The Contractor must perform 100% preservation in accordance with SFLC Std Spec 6310, Appendix A (Cutter and Boat Exterior Painting Systems) on the following exterior surfaces:

- Foc'sle, 01 level deck, (approx.) 1000-SQFT.

3.2.1 Preparation method. The Contractor must prepare interior surfaces using SSPC-SP 11.

3.2.2 Coating method. The Contractor must apply finish/top coat color to interior surfaces as follows: match existing adjacent surfaces.

3.3 Substrate inspection. Upon completion of surface preparation and prior to application of primer coat the Contractor must perform a visual inspection of the prepared surfaces; submit a CFR.

4. NOTES

This section is not applicable to this work item.

WORK ITEM 35: Power Circuit Breakers, Inspect, Maintain & Test

1. SCOPE

1.1 Intent. This work item describes the requirements for the Contractor to clean, inspect, lubricate and test 09 Siemens RL power circuit breakers located on the Ship Service and Emergency Switchboards that were designed and tested to UL 1066 standards.

1.2 Government-furnished property.

None.

2. REFERENCES

COAST GUARD DRAWINGS

Coast Guard Drawing 225-WLB 320-1, Rev. AR, Electrical One-Line Diagram

COAST GUARD PUBLICATIONS

Surface Forces Logistics Center Standard Specification (SFLC Std Spec) 0000, 2022, General Requirements

Surface Forces Logistics Center Standard Specification (SFLC Std Spec) 3042, 2022, Shipboard Electrical Cable Removal, Relocation, Splice, Repair, and Installation

Coast Guard Technical Publication (TP) 3534A_SWBS 324_A, Switchboards, Ship Service and Emergency Diesel Generator – Model D213041-M1.

OTHER REFERENCES

American National Standards Institute/National Electrical Manufacturers Association (ANSI/NEMA) AB 4, Mar 2011, Guidelines for Inspection and Preventive Maintenance of Molded Case Circuit Breakers Used in Commercial and Industrial Applications

Underwriters Laboratories Inc. (UL) 1066, Low-Voltage AC and DC Power Circuit Breakers Used in Enclosures, Aug. 2022

3. REQUIREMENTS

3.1 General.

3.1.1 CIR. The Contractor must submit a CIR for the inspections listed in the following paragraph(s):

- 3.2 Operational assessment.
- 3.4.2 Inspection.
- 3.4.3 Testing.

3.1.2 Tech Rep. The Contractor must provide the services of a Qualified Technical Representative (Tech Rep) who is familiar with the original equipment manufacturer or employed by a firm accredited by the InterNational Electrical Testing Association (NETA). An accredited firm shall use only NETA certified technicians with calibrated test equipment during the performance of this work item. The Tech Rep shall accomplish the following on site:

- Advise on manufacturer's proprietary system information..
- Assist with the installation and repair method(s).
- Ensure compliance with manufacturer's procedures and standards during system disassembly, inspection, and reassembly as applicable.

3.1.2.1 Ensure the Tech Rep has experience with the system/equipment stated above and demonstrated on their résumé.

3.1.2.2 Submit the name and résumé of the Tech Rep to the COR at the Arrival Conference.

3.1.3 Protective measures. The Contractor must furnish and install all protective measures in accordance with SFLC Std Spec 0000, paragraph 3.3.3 (Vessel component, space, and equipment protection).

3.1.4 Interferences. The Contractor must handle all interferences in accordance with SFLC Std Spec 0000, paragraph 3.3.5 (Interferences).

3.1.5 The Contractor must notify the Coast Guard Inspector 48 hours prior to starting work on this item.

3.1.6 Outages. The Contractor must coordinate the disconnection and removal of the circuit breakers with the Coast Guard Inspector to ensure orderly shutdown of equipment. Providing temporary circuit breakers or temporarily relocating circuit breakers from non-essential circuits to essential circuits (same frame size and trip settings) are acceptable strategies to minimize outage durations. When power interruption is expected to exceed 15 minutes, secure uninterruptable power supplies and supported loads.

3.1.7 Essential circuits. The Contractor must minimize the interruption of power to the following circuits, unless actively being serviced by other work items:

3.1.7.1 Ship service lighting (unless temporary lighting is installed).

3.1.7.2 Fire (circuits F and SM), flooding (circuit FD), and general (circuit G) alarms.

3.1.7.3 Main announcing (circuit 1MC) and dial telephone (circuit J) systems.

3.1.7.4 Galley, scullery, potable water heater, HVAC, and sewage systems (unless cutter crew is not living on board).

3.1.7.5 Electric fire pump (unless temporary firefighting water supply is connected).

3.2 Operational assessment. The Contractor must perform an operational assessment of 09 Siemens Ship Service and Emergency Switchboards RL breakers, (see Bill-of-Material drawing B/M-213041 -1), one

each listed below prior to removal from the switchboard in accordance with TP 3534A_324_A and Coast Guard Drawing 225-WLB 320-1. Submit an operational assessment report via CFR.

- Shore Power No. 1 (4PSA-1S),
- Shore Power No. 2 (4PSB-1S),
- Generator No. 1 (1SGA-4P-1S),
- Generator No. 2 (2SGB-4P-2S),
- Bus Tie,
- No. 1 FWD MCHRY (2S-4P-E),
- No. 2 FWD MCHRY (2S-4P-D),
- Emergency Tie (1S-4P-1E),
- Emergency Generator (1EG-4EP-1E).

3.2.1 General.

NOTE

Coast Guard personnel will operate all shipboard machinery and equipment.

3.2.1.1 For cutters with stationary mounted circuit breakers or draw-out type with no TEST position, Ship's Force will run generators or operate shore power, as necessary, to establish safe plant conditions for the operational assessment and provide circuit breaker control power. Ensure that water cooled prime movers are furnished with adequate normal or temporary raw water supplies and that required auxiliaries such as batteries, exhaust, ventilation, start air, fuel oil, jacket water, and lube oil are available.

3.2.1.2 When practicable, operate draw-out type circuit breakers in the TEST position such that the primary contacts (stabs) are disconnected from the switchboard bus but all secondary (control) contacts are still connected to switchboard circuits. For generator circuit breakers, remove the control power transformer secondary winding fuses. Taking appropriate electrical safety precautions, connect a Contractor-furnished temporary control power supply, fused to an ampacity no greater than the normal control power supply, to the vacated load side fuse clips.

3.2.1.3 For a circuit breaker that is locked out and/or tagged out (caution or danger tag), typically in support of another work item, complete the tasking requiring the isolation or shift the work isolation boundary so that the lock and/or tags may be cleared. When shifting the isolation boundary is the only feasible option, such is typically accomplished by opening a local disconnect switch or temporarily disconnecting the feeder cable in accordance with SFLC Std Spec 3042. Ensure that a new lock and/or tag are installed at the new isolation boundary prior to clearing those from the circuit breaker to be removed.

3.2.2 Initial conditions. The circuit breaker to be operationally assessed is assumed to be open with the closing spring charged and control power available.

3.2.3 Manual operation. The Contractor must perform the following for a circuit breaker with mechanical closing and opening controls on the frame:

3.2.3.1 Manually close the circuit breaker. Verify that the mechanical flag for circuit breaker position, if installed, changes state satisfactorily. Confirm that circuit breaker position indicating lights and machinery control system display, if applicable, also toggle. If installed, verify that the spring charging motor recompresses the closing spring and automatically drops out shortly after the spring is fully charged. If no spring charging motor is installed or it fails to operate, manually recompress the closing spring.

3.2.3.2 Manually trip the circuit breaker. Verify that the mechanical flag for circuit breaker position, if installed, changes state satisfactorily. Confirm that circuit breaker position indicating lights and machinery control system display, if applicable, also toggle.

3.2.3.3 If the circuit breaker is equipped with a mechanical or electrical lockout, activate each lockout device one at a time and verify that the circuit breaker cannot be closed manually.

3.2.3.4 If the circuit breaker is equipped with an undervoltage release coil, secure power to the coil by removing a secondary control power fuse or securing the temporary control power supply. Attempt to manually close the circuit breaker. Observe indicators and flags to ensure that the main contacts do not close (even momentarily). Discharge of the closing spring is acceptable. Reenergize the undervoltage release coil.

3.2.3.5 For circuit breakers without an undervoltage release coil or for those where the closing spring did not discharge while testing the undervoltage release closing interlock, secure control power to the spring charging motor, ensuring that the undervoltage release coil, if installed, remains energized. Some circuit breaker designs have an internal spring charging motor switch for this purpose; otherwise a control power lead to the motor must be temporarily disconnected at the secondary terminal block. Manually close the circuit breaker and then manually open it to discharge the closing spring.

3.2.3.6 Verify that the mechanical flag for closing spring status, if installed, changes state during this step. Manually charge the closing spring, observing the ratchet mechanism and pawls for signs of damage, such as binding or excessive wear.

3.2.3.7 Reenergize any circuit breaker control circuits that were deenergized in paragraph 3.2.3.5 above.

3.2.4 Electrical operation. The Contractor must perform the following for a circuit breaker with electrical closing and opening controls on the switchboard:

3.2.4.1 Electrically close the circuit breaker. Verify that the mechanical flag for circuit breaker position and closing spring status, if installed, change state satisfactorily. Confirm that circuit breaker position indicating lights and machinery control system display, if applicable, also toggle. If installed, verify that the spring charging motor recompresses the closing spring and automatically drops out shortly after the spring is fully charged. If no spring charging motor is installed or it fails to operate, manually recompress the closing spring.

3.2.4.2 Electrically trip the circuit breaker. Verify that the mechanical flag for circuit breaker position, if installed, changes state satisfactorily and that the shunt trip coil remains deenergized while the control switch is held in the TRIP position. Confirm that circuit breaker position indicating lights and machinery control system display, if applicable, also toggle.

3.2.4.3 If the circuit breaker is equipped with a mechanical or electrical lockout, activate each lockout device one at a time and verify that the circuit breaker cannot be closed electrically.

3.2.4.4 If the circuit breaker is equipped with an undervoltage release coil, secure power to it by temporarily disconnecting the associated lead at the secondary terminal block; ensure that power to the closing coil and position indicating circuit remains available. Attempt to electrically close the circuit breaker and observe indicators and flags to ensure that the main contacts do not close (even momentarily). Discharge of the closing spring is acceptable.

3.2.4.5 Reenergize any circuit breaker control circuits that were deenergized in paragraph 3.2.4.4 above.

3.2.4.6 If the circuit breaker is equipped with an anti-pump mechanism, electrically close the circuit breaker and continue to hold the control switch in the CLOSE position. If practicable, trip the circuit breaker on fault by simulating an overcurrent condition at the trip unit; otherwise defer this test until the circuit breaker arrives at the maintenance facility. Verify that the circuit breaker does not reclose until the control switch is released and another closing operation is attempted. Open the circuit breaker.

3.2.5 Bell alarm switch. The Contractor must perform the following for a circuit breaker with a bell alarm switch:

3.2.5.1 Close the circuit breaker using mechanical or electrical control.

3.2.5.2 If practicable, automatically trip the circuit breaker by simulating an overcurrent condition at the trip unit or by momentarily deenergizing control power to activate the undervoltage release; otherwise defer this test until the circuit breaker arrives at the maintenance facility. Verify that the bell alarm switch contacts are in the tripped state.

3.2.5.3 Manually reset the tripped circuit breaker using mechanical or electrical control. Verify that the bell alarm switch contacts are in the normal state.

3.2.6 Draw-out interlock. The Contractor must perform the following for a circuit breaker with a draw-out interlock:

3.2.6.1 De-energize both sets of primary contacts (stabs) in the switchboard.

3.2.6.2 If the circuit breaker is equipped with an undervoltage release or can only be operated electrically and temporary control power is not already installed:

3.2.6.2.1 Remove the control power transformer secondary winding fuses.

3.2.6.2.2 Taking appropriate electrical safety precautions, connect a Contractor-furnished temporary control power supply, fused to an ampacity no greater than the normal control power supply, to the vacated load side fuse clips.

3.2.6.3 Ensure that the circuit breaker is withdrawn to the TEST position such that the primary contacts (stabs) are disconnected from the switchboard bus but all secondary (control) contacts are still connected to switchboard circuits.

3.2.6.4 Close the circuit breaker using mechanical or electrical control.

3.2.6.5 Attempt to rack in the closed circuit breaker to the CONNECTED position. Verify that such an operation is physically impossible or confirm that the circuit breaker automatically trips before the stabs reach the primary contacts in the switchboard.

3.2.6.6 If not already tripped, open the circuit breaker using mechanical or electrical control and fully insert it to the CONNECTED position.

3.2.6.7 Close the circuit breaker using mechanical or electrical control.

3.2.6.8 Attempt to rack out the closed circuit breaker to the TEST or DISCONNECTED position. Verify that such an operation is physically impossible or confirm that the circuit breaker automatically trips before the stabs separate from the primary contacts in the switchboard.

3.2.6.9 If not already tripped, open the circuit breaker using mechanical or electrical control.

3.2.7 Spring discharge interlock. The Contractor must perform the following for a circuit breaker with a spring discharge interlock:

3.2.7.1 If not already compressed, charge the closing spring.

3.2.7.2 Rack out the open circuit breaker to the DISCONNECTED position. Verify that such an operation is physically impossible or confirm that the closing spring automatically discharges between the TEST and DISCONNECTED positions.

3.2.8 Restoration. The Contractor must perform the following for each circuit breaker assessed in accordance with section 3.2 Operational assessment.

3.2.8.1 Ensure that the circuit breaker is open.

3.2.8.2 If not already accomplished, remove the circuit breaker control power transformer secondary winding fuses and disconnect any temporary control power supply.

3.2.8.3 If compressed, discharge the closing spring.

3.3 Removal. The Contractor must comply with the following procedures while removing circuit breakers in completion of this work item:

3.3.1 Prior to the removal of each circuit breaker, record location (position or circuit identifier), wiring information, and if adjustable, as found pickup and time delay settings. Retain all mounting and connecting hardware for later reuse. Submit a CFR with all recorded data to the Coast Guard Inspector.

3.3.2 Disconnect and remove the circuit breakers listed in the table below.

3.3.3 Inspect the primary and secondary disconnects in the switchboard for wear and erosion. Check the torques of all primary disconnect studs to the bus work or power cable lugs. Inspect for broken control wiring lugs and check the tightness of wiring at the secondary disconnect terminal blocks. Renew any broken lugs and tighten any loose connections to wiring or bus.

3.3.4 Temporarily cover or insulate switchboard openings created by the removal of circuit breakers to prevent personnel contact with energized conductors and to block the entry of debris from other ongoing industrial activities.

3.4 Shop Work. The Contractor must comply with the following procedures while servicing circuit breakers in completion of this work item:

3.4.1 Cleaning and lubrication. Clean circuit breaker internals with manufacturer's approved solvents and lint free cloths. Do not use high pressure air or wire brushes. Lubricate all components in accordance with manufacturer's instructions.

3.4.2 Inspection. Perform the inspections and take the measurements described below. Report all results, including any adjustments made, on a CFR.

3.4.2.1 Remove and inspect the arc chutes. Note if an arc chute is severely burned, cracked, or excessively eroded.

3.4.2.2 Visually inspect all primary intermediate (if installed), main, and arcing contacts for erosion and evidence of overheating. Inspect associated insulators for cracks and degradation. Determine whether the condition of one or more contacts or insulators meets the criteria for renewal in accordance with manufacturer's guidelines.

3.4.2.3 Set up the circuit breaker for maintenance or slow closing. Check alignment and measure the contact force, spring tension, air gap, and wipe on each contact in accordance with manufacturer's instructions and make adjustments, as necessary, to set these values within specification.

3.4.2.4 Check contact closure sequencing to ensure that the differences in the making of the arcing contacts on the same pole and between poles is within manufacturer's tolerances. Also verify that the opening sequencing is satisfactory in the same manner.

3.4.2.5 Reinstall the arc chutes and torque all fasteners in accordance with manufacturer's instructions.

3.4.2.6 Inspect the primary and secondary disconnects (stabs) for wear and erosion. For a circuit breaker with finger type primary disconnects, check that the proper force is applied when a dummy bar, representative of the mating stationary disconnect, is inserted.

3.4.2.7 Inspect mechanical linkages, bearings, pawls, gears, cams, rollers, rods, and shafts for excessive wear and damage. Identify incorrectly assembled components. Note all missing and improperly installed fasteners.

3.4.2.8 Inspect electrical switches, solenoids, relays, wiring, and motors for excessive wear and damage. Perform an insulation resistance check of all control wiring using a 500 VDC test voltage. Isolate and identify any wiring or component with insulation resistance of less than 1 MΩ to ground.

3.4.2.9 For a circuit breaker equipped with a spring charging motor, verify that the motor cutoff switch is aligned in accordance with manufacturer's instructions.

3.4.3 Testing. After satisfactory visual inspection and completion of any authorized repair work, test each circuit breaker as directed in this section.

3.4.3.1 Perform the following tests of ANSI/NEMA AB 4, Section 6:

- Mechanical operation
- Insulation resistance
- Individual pole resistance (millivolts drop)
- Inverse-time overcurrent trip (not applicable to non-automatic switches)
- Instantaneous overcurrent trip
- Rated hold-in current

3.4.3.2 Short-time overcurrent trip. This test is applicable only if the circuit breaker is equipped with a short-time delay trip. The operation of the short-time delay unit should be within 90% and 125% of the overcurrent setting of the circuit breaker as shown on the manufacturer's time-current curves.

3.4.3.3 Ground fault trip. The circuit breaker should not be equipped with a ground fault trip. If such is installed, submit a CFR noting the discrepancy.

3.4.3.4 Dielectric test. Perform a dielectric test on each 480 or 600 volt rated circuit breaker where the case was opened for repair or the circuit breaker was obtained through non-OEM authorized supply channels. The dielectric test should be conducted at an AC test voltage of 1568 (480 volt rating) or 1760 volts (600 volt rating) or at 2500 volts DC for 1 minute withstand. Conduct the dielectric test for each of the following conditions:

- Each pole (line to load terminal) with the circuit breaker open
- Each pair of line to line terminals with the circuit breaker closed
- Each line terminal to ground with the circuit breaker open
- Each pole to ground with the circuit breaker closed

3.4.3.5 For each circuit breaker accessory, perform the applicable tests of ANSI/NEMA AB 4, Section 7. Review the Table 1 configuration below for each circuit breaker and submit a CFR for model number discrepancies as well as any missing or extra accessory. When performing ANSI/NEMA AB 4, Section 7.3, use a variable voltage control power source and voltmeter to measure dropout and pickup voltages of the undervoltage release coil. Dropout voltage shall be between 15% and 60% of the coil voltage rating; pickup shall occur between 30% and 85%.

3.4.3.6 Record the following data for each circuit breaker that was tested:

- Circuit breaker model and serial number
- Circuit identifier or position
- Test data and results
- Test technician name and date of test
- Name and address of testing laboratory

3.4.3.7 Update the label on the circuit breaker case, as necessary, so that it accurately describes the circuit breaker configuration and installed accessories. Apply a sticker showing the name of the testing laboratory along with the date of the test.

3.5 <u>Reinstallation</u>. The Contractor must perform the following for each circuit breaker removed in accordance with section 3.3 Removal.

3.5.1 Vacuum out the circuit breaker enclosure and completely remove any foreign material.

3.5.2 Lubricate primary and secondary disconnects in accordance with manufacturer's instructions.

3.5.3 Reinstall and reconnect each circuit breaker using information retained in paragraph 3.2.1 above.

3.5.4 Perform an energized operational test of all affected circuit breakers in the presence of the Coast Guard Inspector. Verify that all accessory devices are functioning. For circuit breakers supplying three phase motor loads, either directly or indirectly through intermediate panelboards, perform a phase rotation check if any power wiring was disconnected.

3.5.5 When isolation is no longer required, reconnect all cables disconnected per paragraph 3.2.1.4 above per SFLC Std Spec 3042

4. NOTES

4.1 Inspection periodicity. Circuit breakers are normally maintained, tested, and lubricated at 48 month intervals; however, such should also be performed when the following number of open-close cycles with main contact current flow are exceeded since the last inspection:

4.1.1 800 ampere frame and below – 2800 cycles

4.1.2 900-2500 ampere frame – 800 cycles

4.1.3 3000 ampere frame and above – 400 cycles

4.2 High current fault. When a circuit breaker interrupts a high current fault, perform the arc chute and primary contact inspections before returning the device to operation. Also inspect the associated switchboard bus work for deformation and possible derangement..

WORK ITEM 36: Independent NACE Inspector (Level 3), Provide

1. SCOPE

1.1 Intent. This work item describes the requirement for the Contractor to provide the services of an independent NACE-certified level 3 inspector for the preservation of all critical-coated surfaces.

1.2 Government-furnished property.

None.

2. REFERENCES

COAST GUARD DRAWINGS

None.

COAST GUARD PUBLICATIONS

Surface Forces Logistics Center Standard Specification 0000 (SFLC Std Spec 0000), 2022, General Requirements

Surface Forces Logistics Center Standard Specification 5000 (SFLC Std Spec 5000), 2022, Auxiliary Machine Systems

Surface Forces Logistics Center Standard Specification 6310 (SFLC Std Spec 6310), 2022, Requirements for Preservation of Ship Structures

OTHER REFERENCES

The Society for Protective Coatings (SSPC) Surface Preparation Specification No.1 (SSPC-SP 1), Solvent Cleaning

The Society for Protective Coatings (SSPC) Surface Preparation Specification No.3 (SSPC-SP 3), Power Tool Cleaning)

The Society for Protective Coatings (SSPC) Surface Preparation Specification No.11 (SSPC-SP 11), Power Tool Cleaning to Bare Metal

The Society for Protective Coatings (SSPC), Paint Application Specification No. 2 (PA-2), Procedure for Determining Conformance to Dry Coating Thickness Requirements

The Society for Protective Coatings SSPC-SP 10/NACE No.2, Near-White Blast Cleaning

3. REQUIREMENTS

3.1 General.

3.1.1 CIR.

None.

3.1.2 Tech Rep. The Contractor shall provide the services of an independent Certified Coating Inspector. The Coating Inspector shall be Independent and certified NACE level 3.

3.1.2.1 Professional independence. The Tech Rep shall neither be an employee of the Contractor, nor of any coating system manufacturer.

3.1.2.2 The services of the tech rep shall be used for all preservation, partial-preservation, and touch-ups of critical-coated surfaces.

3.1.2.2 Inspector or tech rep duties. The Coating Inspector for the contractor-provided NACE-certified Tech Rep shall remain on site, to perform the following duties, as applicable, for each work item that involves preservation of "critical-coated surfaces":

- Verify inspection instrument calibration
- Verify and approve the suitability of ambient conditions before surface preparation is begun, and before each coat of paint is applied.
- Verify all aspects of surface preparation – including, but not limited to: Cleanliness of compressed air; adequacy of solvent cleaning; proper handling of blast media and actual surface preparation procedure.
- Inspect and approve final surface preparation, before application of primer coat.
- Supervise and approve coating system preparation and application procedures, including but not limited to: mixing and thinning, stripe coating application, spray techniques, and film thickness measurements and recordings.
- Determine when applied coats have sufficiently cured for overcoating or for system service resumption (see paragraph 3.1.19 of SFLC Std Spec 6310 (Critical drying time requirements)).
- Complete and sign the quality assurance (QA) inspection forms, provided in Appendix E of SFLC Std Spec 6310 (Coatings QA Forms/QA-1 thru QA-5).
- Submit all completed QA inspection forms to the COR (through the Contractor), upon completion of work.
- Approve all preservation plans

NOTE
The NACE Inspector must remain onsite, to fulfill the tasked duties listed above - unless otherwise approved by the KO.

3.1.2.2 The Contractor shall submit the name of the Tech Rep to the COR at the Arrival Conference.

3.1.2.3 Tech Rep shall maintain daily communication with the contractor and COR, ensuring progress, problems, or any deviations from the specification are known immediately to all parties.

3.1.3 Protective measures. The Contractor shall furnish and install all protective coverings to seal off and protect all non-affected vessel's components, equipment, and spaces near the work area against contamination during the performance of work. Upon completion of work, the Contractor shall remove all installed protective measures, inspect for the presence of contamination, and return all contaminated equipment, components, and spaces to original condition of cleanliness.

3.1.4 Interferences. The Contractor shall handle all interferences in accordance with SFLC Std Spec 0000, paragraph 3.3.5 (Interferences). Known interferences include, but are not limited to the following:

3.2 Work Location. The concerned work locations are all surfaces that require preservation, partial-preservation, and touch-ups of critical-coated surfaces.

3.2.1 Touch-Up Preservation. Documentation for critical-coated surfaces shall not be waived for touch-up preservation.

4. NOTES

4.1 Definitions.

4.1.1 Critical-coated surfaces. Areas where premature failure of the coating system cannot be detected by routine observation due to inaccessibility, or areas where restoration of a failed system cannot be undertaken without laying up the ship at an industrial facility or a forward repair site; or areas where restoration of a failed system may subject a vessel to a loss of operational days, in addition to resulting in avoidable repair costs. The absence of the critical- coated surfaces designation in the individual work items does NOT downgrade, diminish, or relax the critical-coated surface protocols for established list defined within SFLC Std Spec 0000 paragraph 1.3. The list of “Critical- coated surfaces” will always be treated as critical-coated surfaces as set forth in the applicable sections of this standard. Individual work items may place the critical- coated surface protocols on additional surfaces.

4.1.2 Partial Preservation. Surface preparation and coating application accomplished for up to 33% of a ship component (e.g., tank, u/w body, freeboard, main deck, grid cooler, crane, davit, etc.). This may also include an additional finish coat over 100% of the component - for aesthetic purpose. In-process QC measures are applicable for partial preservation of surfaces defined as "critical-coated surfaces" [see paragraph 3.2.4.2 (In-process QC measures for “critical-coated surfaces”) of SFLC Std Spec 0000].

4.1.3 Touch-up. Preservation operations on cumulative surface areas less than 10 percent of the total area (e.g., bilge, tank, space, etc.) being preserved, with no individual area greater than 10 square feet. Included under touch-up operations are new and disturbed surfaces of less than 10 square feet. Except for potable water, reserve feedwater, or freshwater drain collecting tanks.

4.2 Auxiliary Equipment Preservation. Preservation and partial preservation tasks shall be performed in accordance with STLF Std. Spec 5000 paragraph 3.2.4 and all subparagraph

WORK ITEM 37: Tenting, Provide

1. SCOPE

1.1 Intent. This work item describes the requirements for the Contractor to provide suitable tenting to create or maintain required ambient conditions for preservation and to contain all waste generated during preservation processes for the following work items:

NOTE
This work item is not separately priced. Factor tenting costs into bid for below work items.

- WORK ITEM 17: Buoy Crane, Preserve Partial
- WORK ITEM 34: Foc'sle Deck, Preserve

1.2 Government-furnished property.

None.

2. REFERENCES

COAST GUARD DRAWINGS

Coast Guard Drawing 225-WLB 601-001, Rev AC, General Arrangements Inboard and Outboard Profiles

COAST GUARD PUBLICATIONS

Surface Forces Logistics Center Standard Specification 0000 (SFLC Std Spec 0000), 2020, General Requirements

Surface Forces Logistics Center Standard Specification 6310 (SFLC Std Spec 6310), 2020, Requirements for Preservation of Ship Structures

OTHER REFERENCES

Code of Federal Regulations (CFR) Title 29, Part 1910, Occupational Safety and Health Standards

Code of Federal Regulations (CFR) Title 29, Part 1915, Occupational Safety and Health Standards for Shipyard Employment

Code of Federal Regulations (CFR) Title 40, Protection of the Environment

3. REQUIREMENTS

3.1 General.

3.1.1 CIR.

None.

3.1.2 Tech Rep.

Not Applicable.

3.1.3 Protective measures. The Contractor must furnish and install all protective measures in accordance with SFLC Std Spec 0000, paragraph 3.3.3 (Vessel component, space, and equipment protection).

3.1.4 Interferences. The Contractor must handle all interferences in accordance with SFLC Std Spec 0000, paragraph 3.3.5 (Interferences).

3.1.5 Work coordination: The Contractor must coordinate the accomplishment of this work item with the following work items :

- WORK ITEM 17: Buoy Crane, Preserve Partial
- WORK ITEM 34: Foc'sle Deck, Preserve

3.2 Environmental protection. The Contractor must abide by all requirements for environmental protection specified in SFLC Std Spec 0000, Appendix A (Requirements for Environmental Protection at Contractor Operated (Non USCG) Facilities), and Appendix B (Requirements for Environmental Protection at USCG Facilities).

3.3 Safety and protection. The Contractor must comply with all required and applicable safety and protection specified in SFLC Std Spec 0000, paragraph 3.3.1 (Personnel safety and property protection - general), and all OSHA safety and health regulations, and any other applicable federal, state, and local laws, and regulations, for the protection of both personnel and property. Relevant Coast Guard and federal regulations include, but are not limited to the following:

- Suitable Scaffolding and/or lifelines are required for working above five feet (29 CFR 1910 and 1915)
- Temporary lines or rails must be installed in place of all removed lifelines or life rails, and be retained until replacement tasks have been completed.
- Adequate illumination is required in walkways, work areas, and access to provide a safe work environment (29 CFR 1915.92(a))

3.4 Tenting. The Contractor must tent work areas defined by the scope of work items referenced in Paragraph 1.1 during surface preparation and preservation operations in accordance with SFLC Std Spec 6310, paragraph 3.1.5 (Tenting and ambient condition control) and SFLC Std Spec 0000, paragraph A2.2.14/B2.2.16 (Containment - general). Tenting features must be as follows:

- Tenting must be set up in a way that it will not interfere with the blasting, preservation, or machinery removal and reinstallation operations.
- Tenting must be constructed to prevent precipitation from affecting preservation operations, and be able to withstand severe inclement weather conditions.

- Tenting must be outfitted with a re-sealable opening that will permit loading and unloading of equipment and supplies.
- Tenting must be used to protect the environment from possible contamination due to preservation work.
- Tenting must prevent all preservation waste products from leaving the work area including but not limited to: dust generated from blasting, blast media, and paint chips.
- Tenting interior spaces must be kept orderly, with waste and debris disposed of regularly.
- Temporary tenting must be included to protect exterior surfaces from inclement weather, while undergoing preservation.
- Temporary enclosures may be rigged and left overnight as long as they do not block egress routes or ventilation.

3.5 Ambient condition control. The Contractor must control environmental conditions necessary for required works in accordance with SFLC Std Spec 6310, paragraph 3.1.4 (Ambient condition parameters).

3.5.1 Control equipment. To maintain ambient conditions recommended by coating system manufacturers and to accomplish surface preparation and coating application, the Contractor must provide suitable ambient condition control equipment including, but not limited to:

- Lighting : Lights and light fixtures
- Temperature : HVAC systems (e.g. heaters, air-conditioners)
- Humidity : Humidifiers, or dehumidifiers
- Air circulation : Blowers, and ventilators

3.5.2 Control plan. The Contractor must submit an ambient condition control plan to the COR before or on arrival conference prior to initiating ambient condition control process.

3.6 Touch-up preservation, general. The Contractor must prepare and coat all new and disturbed exterior and interior surfaces, as applicable, to match existing adjacent surfaces in accordance with SFLC Std Spec 6310, paragraph 3.1.13 (Touch-ups and minor coating repairs).

4. NOTES

This section is not applicable to this work item.

WORK ITEM 38: Main Reduction Gear PTO's Seal, Renew

1. SCOPE

1.1 Intent. This work item describes the requirements for the Contractor to renew the Thruster Generator Power take-off (PTO) Oil Seals.

1.2 Government-furnished property.

MTI	ITEM DESCRIPTION	NSN/PN	QTY	ESTIMATED COST ($/UNIT)
N	Oil Seal, Split	PN: 6001-2378 Drawing 010170-0353; 80 .	2 ea.	250

***Government-loaned property, which shall be returned to the vessel upon completion of the availability.**
****New or refurbished equipment that the Government may provide for installation in place of existing equipment.**
*****Government-furnished property, which is to be supplied by either the vessel or the C4IT Service Center.**

2. REFERENCES

COAST GUARD DRAWINGS

Coast Guard Drawing 225-WLB 243-001, Rev B; PROPULSION SHAFTING ARRANGEMENT

COAST GUARD PUBLICATIONS

Coast Guard Technical Publication (TP) IB-H2-0002-V0, Nov 2024, ROPULSION SHAFTING AND BEARINGS - MODEL 01-BCP, 587.55TS-94365A & 1K571500 - TECHNICAL MANUAL

Surface Forces Logistics Center Standard Specification 0000 (SFLC Std Spec 0000), 2022, General Requirements

OTHER REFERENCES

The Society for Protective Coatings (SSPC) Surface Preparation Specification No.1 (SSPC-SP 1), 2004, Solvent Cleaning

3. REQUIREMENTS

3.1 General.

3.1.1 CIR.

None.

3.1.2 Tech Rep.

None.

3.1.3 Protective measures. The Contractor must furnish and install all protective measures in accordance with SFLC Std Spec 0000, paragraph 3.3.3 (Vessel component, space, and equipment protection).

3.1.4 Interferences. The Contractor must handle all interferences in accordance with SFLC Std Spec 0000, paragraph 3.3.5 (Interferences). Known interferences include, but are not limited to the following:

- Shaft guards
- Nearby coupling
- Nearby piping

3.2 PTO Shaft seal renewal.

3.2.1 The Contractor shall renew the PTO shaft seal using Coast Guard Drawing 225 WLB 243-001 an CG Tech Pub IB-H2-0002-V0.

NOTE

Note that CG Tech Pub IB-H2-0002-V0 illustrates the subject PTO seals in drawings and material lists, but is silent on any sela renewal procedure. Appendix AB of that Tech Pub has a procedure for the quill shaft's fwd split seal. Although it is specific to that seal, general information may be of use.

3.2.1.1 Split seal is authorized. USCG prefers whenever possible a solid seal (un-split) seals are utilized. However, in situation like this where additional disassembly is undesired a split seal is a time saver.

3.2.2 Remove seal retainer plate Item #82 to access seal. In removing old seals, pay close attention in removal of seal orientation. Between the two lip seals is a seal spacer #81, that must be slid as far aft as possible so it's temporarily out of the wayed.

3.2.3 Clean up seal bore and shaft in way of seals using soft brush and solven. Ensure that all parts of the old seal have been removed.

3.2.4 Submit a CFR with any negative findings discovered in the course of removing existing seals.

3.2.5 Install the new split seals in the seal cavity, lightly grease seals. Ensure lips are facing the same as removed (it is expected the interior lips face inboard and the exterior seal faces outboard).

3.2.5.1 The split of both seals should be at the 12:00 position.

3.2.6 Reinstall seal retainer plate Item #82.

3.2.7 Fill with new grease the grease cavity via the zerk fitting, until clean grease exits the relief fitting. Grease must be NLGI @ grease on the MIL-G-24508 qualified products list.(QPL).

3.2.8 Operational Test

3.3.1 In the course of the next planned MRG-Thruster Generator operation and in the presence of the Coast Guard Inspector, observe the seals for leakage.

4. NOTES

This section is not applicable to this work item.

Figure 1: PTO Generator Seal Area, at Reduction Gear.

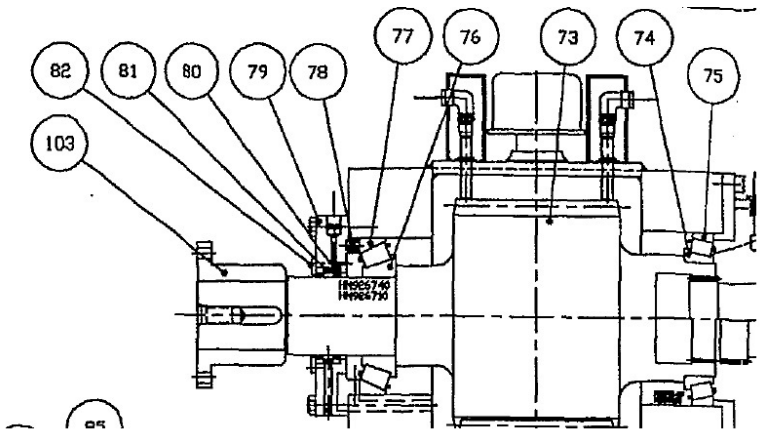

01070-0353	C	3		79	Cap, Generator	1	50040-5464	PGC	
01070-0353	C	3		80	Oil Seal	2	36000-0739	CHICAGO RAWHIDE	44967 CRWH1
01070-0353	C	3		81	Spacer, Seal	1	50315-9033	PGC	
01070-0353	C	3		82	Plate, Seal Retainer	1	50085-2859	PGC	

Figure 2. PTO seal (excerpt from Tech Pub)

WORK ITEM 39: Steering Gear Heat Exchanger, Modify

1. SCOPE

1.1 Intent. This work item describes the requirements for the Contractor to install expansion joints in the ASW piping of the steering gear coolers to isolate the coolers from vibration, in the Steering Gear Room (1-102-0-E).

1.2 Government-furnished property.

None.

2. REFERENCES

COAST GUARD DRAWINGS

Coast Guard Drawing 225-WLB 256-001, Rev U; Seawater Cooling Sys Diagram

Coast Guard Drawing 225B-WLB 256-001, Rev P; Seawater Cooling Sys Diagram

Coast Guard Drawing 225-WLB 505-1, Rev D; General Requirements for Piping Systems

Coast Guard Drawing 225B-WLB 505-1, Rev D; General Requirements for Piping Systems

Coast Guard Drawing 225-WLB 561-005, Rev H; Steering Gear Heat Exchanger Replacement

Coast Guard Drawing 225B-WLB 561-005, Rev E; Steering Gear Heat Exchanger Replacement

Coast Guard Drawing 225-WLB 561-001, Rev E Steering Gear Hydraulic Diagram

Coast Guard Drawing 225B-WLB 561-001, Rev C, Steering Gear Hydraulic Diagram

COAST GUARD PUBLICATIONS

Coast Guard Commandant Instruction (COMDTINST) M10360.3 (series), Coatings and Color Manual

Surface Forces Logistics Center Standard Specification 0000 (SFLC Std Spec 0000), Jan 2022, General Requirements

Surface Forces Logistics Center Standard Specification 0740 (SFLC Std Spec 0740), Jan 2012, Welding and Allied Processes

Surface Forces Logistics Center Standard Specification 0850 (SFLC Std Spec 0850), Jun 2009, General Requirements for Drawing Preparation

Coast Guard Technical Publication (TP) 3555, 21-May-1996, Steering Gear Systems

OTHER REFERENCES

None.

3. REQUIREMENTS

3.1 General.

None.

3.1.1 CIR.

None.

3.1.2 Technical Representative.

Not applicable.

3.1.3 Protective measures.

Not applicable.

3.1.4 Interferences. The Contractor shall be aware that interferences in way of work include, but are not limited to the below-listed. Handle all interferences in accordance with SFLC Std Spec 0000, paragraph.

- Piping and fittings.

NOTE

Coast Guard personnel will operate all shipboard machinery and equipment.

3.2 Operational test - initial. Prior to commencement of work, the Contractor shall witness an operational pre-test (by Coast Guard personnel) of all items or shipboard devices to be disturbed, used, repaired, or altered, to demonstrate existing operational condition. Submit a CFR.

3.3 Removals.

3.3.1 The Contractor shall disconnect and remove the ASW piping for both coolers on the Steering Gear HPU, as shown on Coast Guard Drawing 225-WLB-561-001, 225B-WLB-561-001, 225–WLB-561-005 and 225B-WLB-561-005.

3.4 Installations and modifications. The Contractor shall accomplish the following tasks, as shown on Coast Guard Drawing 225–WLB-561-005, 225B-WLB-561-005, 225-WLB-505-1 and 225B-WLB-505-1.

3.4.1 Install the ASW piping, valves and fittings connecting the ASW system to each heat exchanger, as shown on Coast Guard Drawing 225–WLB-561-005 and 225B-WLB-561-005.

3.5 Temporary ASW connections . The auxiliary sea water (ASW) system is required to remain online import to provide cooling to the air conditioning condensers and the vessel refrigeration unit. The ASW system may need to be temporarily secured in order to connect the new ASW piping for the hydraulic oil heat exchanger to the existing ASW system. In the event that this system may need to be secured to accomplish this engineering change, the contractor may need to provide a temporary alternate source of ASW to equipment that normally uses this ASW import. The contractor shall work with the Coast Guard inspector and vessel Engineering Officer when necessary to determine if there will be a need for this

requirement. The contractor shall determine the proper location and method to provide this temporary connection.

3.6 All new piping, takedown joints, fittings, valves, flexible connections gaskets, nuts and bolts required to complete the piping modifications above shall be in accordance with the piping system requirements contained on CG Dwg 225–WLB-561-005 and 225B-WLB-561-005.

NOTE

Coast Guard personnel will operate all shipboard machinery and equipment.

3.7 Operational test – post repairs. After completion of work, the Contractor shall witness an operational test (by Coast Guard personnel) of all items or shipboard devices that have been disturbed, used, repaired, altered, or installed, to prove that they are in satisfactory operating condition. Submit a CFR.

3.7.1 Hydrostatically test the newly installed ASW piping, and connectors to 105 psig in accordance with the directions shown in reference CG Dwg 225–WLB-561-005 and 225B-WLB-561-005. Demonstrate that there is no leakage to the Coast Guard Inspector.

3.7.2 Repair any leaks and retest in the presence of the Coast Guard Inspector.

3.8 Reassembly. Remake all connections.

3.9 Touch-up preservation. The Contractor shall prepare and coat all new and disturbed surfaces to match existing adjacent surfaces in accordance with SFLC Std Spec 6310, paragraph 3.1.13 (Touch-ups and minor coating repairs.)

3.10 Label plate. The Contractor shall install a label plate to document satisfactory test completion in accordance with SFLC Std Spec 5000, Appendix B, Paragraph B2.9 (Label Plates).

4. NOTES

This section is not applicable to this work item.

WORK ITEM 40: Directional Control Valve, Upgrade

1. SCOPE

1.1 Intent. This work item describes the requirements for the Contractor to modify the buoy chain winch by replacing a Directional Control Valve (DCV) and control equipment in the manifold on 225' WLB assets.

1.2 Government-furnished property.

MTI	ITEM DESCRIPTION	NSN/PN	QTY	ESTIMATED COST ($/UNIT)
N	Directional Control Valve (DCV)	NSN: 4810-01-F19-5719 PN: 4WRE10E75-2X/G24K4/V	1 ea.	1137.00
N	Amplifier Card	NSN: 5996-01-F19-5720 PN: VT-VRPA2-2-1X/V0/T1	1 ea.	958.21
N	Amplifier Card Holder	NSN: 5996-01-F19-5721 PN: VT3002-1-2X/48F	1 ea.	367.50
N	Mating Connector, 4P G4WIF PG7 SW	NSN: 5935-01-F19-5722 PN: R900023126	1 ea.	150.00

***Government-loaned property, which must be returned to the vessel upon completion of the availability.**
****New or refurbished equipment that the Government may provide for installation in place of existing equipment.**
*****Government-furnished property, which is to be supplied by either the vessel or the C4IT Service Center.**

2. REFERENCES

COAST GUARD DRAWINGS

Coast Guard Drawing 225-WLB-437-210, Rev D, Buoy Deck Equipment Electrical Control System Mods Blk & Elem Wiring Diagram

Coast Guard Drawing 225-WLB-438-002, Rev D, Buoy Deck Controls Install to Suit MMA Aton Crane

Coast Guard Drawing 225B-WLB-438-002, Rev C, Buoy Deck Controls Install to Suit MMA Aton Crane

Coast Guard Drawing 225-WLB-573-207, Rev -, Replacement DCV Amplifier Card Wiring Diagram

COAST GUARD PUBLICATIONS

Coast Guard Commandant Instruction (COMDTINST) 9077.1 (series), Equipment Lockout/Tags-Plus Instruction

Coast Guard Technical Publication (TP) 3498, SWBS 573, Feb 2021, Buoy Chain Winch

Surface Forces Logistics Center Standard Specification 0000 (SFLC Std Spec 0000), 2022, General Requirements

Surface Forces Logistics Center Standard Specification 3042 (SFLC Std Spec 3042), 2022, Shipboard Electrical Cable Removal, Relocation, Splice, Repair, and Installation

OTHER REFERENCES

None

3. REQUIREMENTS

3.1 General.

3.1.1 CIR. The Contractor must submit a CIR for the inspections listed in the following paragraph(s):

- 3.4 Acceptance Testing

3.1.2 Tech Rep. The Contractor must provide the services of a Qualified Technical Representative who is familiar with the Directional Control Valve (DCV) and accompanying Rexroth equipment to accomplish the following on site:

- Advise on manufacturer's proprietary system information.
- Assist with installation and repair method(s).
- Ensure compliance with manufacturer's procedures and standards during system disassembly, inspection, and reassembly as applicable.

3.1.2.1 Ensure the Tech Rep has experience with the system/equipment stated above and demonstrated on their résumé.

3.1.2.2 Submit the name and résumé of the Tech Rep to the COR at the Arrival Conference.

3.1.3 Protective measures. The Contractor must furnish and install all protective measures in accordance with SFLC Std Spec 0000, paragraph 3.3.3 (Vessel component, space, and equipment protection).

3.1.4 Interferences. The Contractor must handle all interferences in accordance with SFLC Std Spec 0000, paragraph 3.3.5 (Interferences).

3.2 Remove Existing Equipment. The Contractor must remove existing DCV parts by completing the following:

3.2.1 Secure valves. Secure hydraulic pressure lines on both sides of the existing DCV.

3.2.2 Label existing wires. Label all wires entering the amplifier card holder according to the originating terminal for each lead. See Replacement DCV Amplifier Card Wiring Diagram DWG 225-WLB-573-207, Rev (-).

3.2.3 Label existing power supply wires. Label all wires entering the power supply according to the originating terminal (e.g. AC Input L/N, DC Output +/-) for each lead.

3.2.4 Disconnect existing. Secure breaker D on the Power Panel 1-18-3 which feeds the Crane PLC per CG drawings 225-WLB-437-210, 225-WLB-438-002, 225B-WLB-438-002. Disconnect equipment as defined below.

3.2.4.1 Disconnect wires where they enter the amplifier card holder (labeled in previous step) and pull back for later reinstallation.

3.2.4.2 Disconnect wires to the mounted power supply.

3.2.5 Remove existing. Remove equipment identified below:

3.2.5.1 Remove amplifier card, P/N: VT5006, dispose of the card in accordance with local regulations.

3.2.5.2 Dismount card holder, P/N: VT3002-1-2X/32D, from the enclosure and dispose of the card holder in accordance with local regulations. Set aside screws for later use.

3.2.5.3 Disconnect feedback sensor connector of cable from the end of the DCV. For 225' WLB assets, this cable is K-1EH1, LS3SJ-18.

3.2.5.4 Remove and dispose of the existing DCV feedback sensor cable in accordance with SFLC Standard Spec 3042.

3.2.5.5 Disconnect solenoid control cables K-1EH2 and K-1EH3 from the DCV. Set aside for later use.

3.2.5.6 Remove DCV, P/N: 4WRE10W-64-12/24Z4/M. See Figure 1.

3.2.5.7 Remove the existing power supply from the enclosure and set aside hardware for later use.

3.3 Install Replacement Equipment. The Contractor must install new DCV parts by completing the following:

3.3.1 Mount DCV. Install the new DCV, P/N: 4WRE10E75-2X/G24K4/V, and reconnect solenoid control cables K-1EH2 and K-1EH3.

3.3.2 Create and install feedback connector. Install the new mating connector, P/N: 4P G4WIF PG7 SW, to the DCV.

3.3.2.1 Measure and cut the length of cable needed to run from the feedback mating connector to the amplifier card using existing cableways.

NOTE

Recommended cable for the feedback mating connector is AlphaWire P/N 2829/4 but it can be replaced with any other cable which meets the following key specifications:

- four conductors, shielded	**- 18 AWG**
- PTFE insulation	**- compliance with Std Spec 3042**

3.3.2.2 Attach the DCV Mating Connector: 4P G4WIF PG7 SW to the new cable. See Table 1 and Figure 2.

3.3.2.3 Install and label the cable in accordance with SFLC Standard Spec 3042. For 225' WLB assets, this cable is K-1EH1.

3.3.3 Install new power supply. Install replacement power supply in the same location.

3.3.3.1 Mount the power supply in the same location as the previous supply, reusing the hardware set aside in step 3.2.5.7 if possible.

3.3.3.2 Reconnect AD and DC leads to the power supply.

3.3.4 Install new amplifier card. Install replacement card holder and amplifier card:

3.3.4.1 Mount the new card holder P/N: VT3002-1-2X/48F in place of the original holder using hardware set aside in step 3.2.5.2 above. See Figure 3.

3.3.4.2 Install the new amplifier card: P/N: VT-VRPA2-2-1X/V0/T1.

3.3.4.3 Connect any remaining leads set aside in step 3.2.4.1 to the new amplifier card in accordance with Table 1 and Figures 4 and 5 below.

TABLE 1 – FEEDBACK CABLE CONNECTIONS

Cond. #	COLOR	Mating Connector	TB B Position	Amp. Card Holder
1	W	1	17	z18
2	BK	2	18	z12
3	R	3	19	z14
4	GR	4	20	z16
Shield	NONE	NONE	NONE	z10

3.4 Acceptance Testing. The Contractor must return the system to full functionality and test for operation. Submit a CIR.

3.4.1 Open hydraulic pressure lines on both sides of the existing DCV.

3.4.2 Remove Red Danger Tags IAW COMDTINST 9077.1 (series).

3.4.3 Reenergize all circuits following completion of work.

3.4.4 Test DC output of the new power supply for 24VDC using a voltmeter.

3.4.5 Test and run machinery and check for leaks.

3.4.6 If tests are unsatisfactory, perform amplifier card tests as described in Analog Amplifier Card VT-VRPA2-.-1X/V0/T Commissioning Instructions from Tech Pub 3498.

3.4.7 Perform a Static Load Test to ensure the DCV operates safely under load.

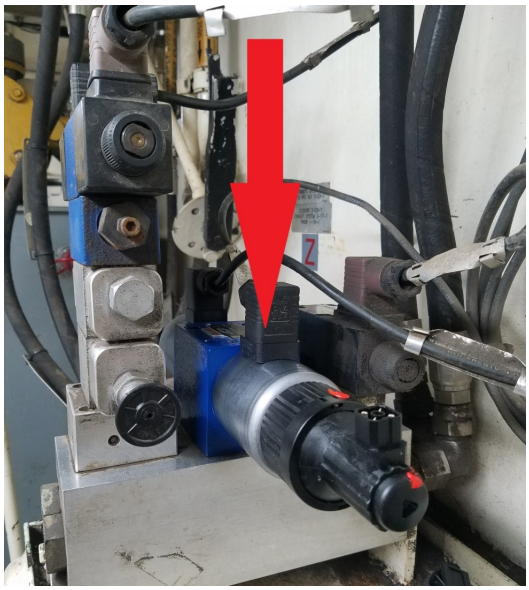

FIGURE 1. DCV TO BE REMOVED

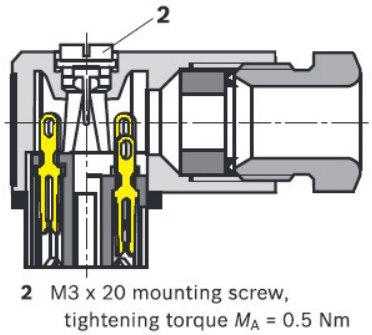

FIGURE 2. MATING CONNECTOR SOLDER TERMINALS

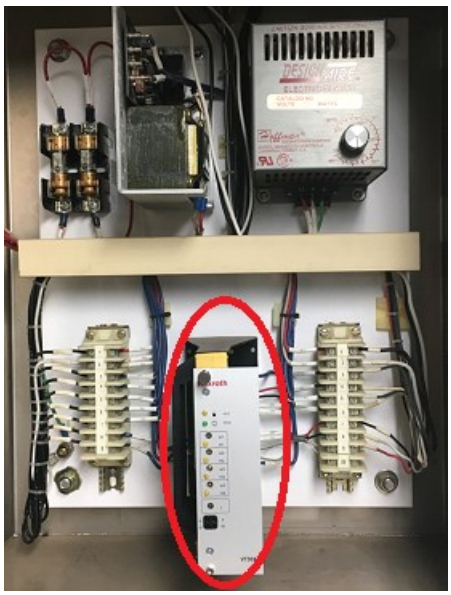

FIGURE 3. CARD AND HOLDER MOUNTING POSITION

Pin assignment of blade connector

These are the terminals the leads were connected to on the old card.

Pin	Row d	Row b	Row z	
2	Command value call-up 1 (24V input) **12c**	Command value 1 (potentiometer connection ±10 V) **14c**	Solenoid a+ **2a**	
4	Command value call-up 2 (24V input)	Command value 2 (potentiometer connection ±10 V)	Solenoid a- **32a**	
6	Command value call-up 3 (24V input)	Command value 3 (potentiometer connection ±10 V)	Solenoid b+ **2c**	
8	Command value call-up 4 (24V input)	Command value 4 (potentiometer connection ±10 V)	Solenoid b- **32c**	
10	Ramp call-up 1 (24V input) **	Command value inversion (24V input)	Shield (position transducer shield only) **28c**	
12	Ramp call-up 2 (24V input) **	Reserved	Position transducer supply (- output)	**term B18**
14	Ramp call-up 3 (24V input) **	Command value 5 + (10V)	Position transducer signal (- input)	**term B19**
16	Ramp call-up 4 (24V input) **	Command value 5 - (-10V)	Position transducer signal (+ input)	**term B20**
18	Enable (24V input) **22ac**	Reserved	Position transducer supply (+ output)	**term B17**
20	Reserved	4-quadrant operation (24V input) **	System ground	
22	Ready-for-operation signal **24c** (24 V, H-active, 50 mA)	Command value 6 + (4 to 20 mA)	Reserved	**These should have been jumpered on the old card holder. Do the same here.**
24	External ramp	Command value 6 - (4 to 20 mA)	Reserved	
26	Reserved	Measuring point signal	Reserved	
28	Reference/external ramp	Reference potential for outputs (M0)	Reserved	
30	Command value output ± 10 V	- 10 V/20 mA **24a**	Operating voltage (24 V) **22ac**	
32	Actual value output ± 10 V	+ 10 V/20 mA **26a**	L0 (0 V) **28ac**	

** only with amplifier card type VT-.../T5

FIGURE 4. PIN ASSIGNMENTS: OLD TO NEW

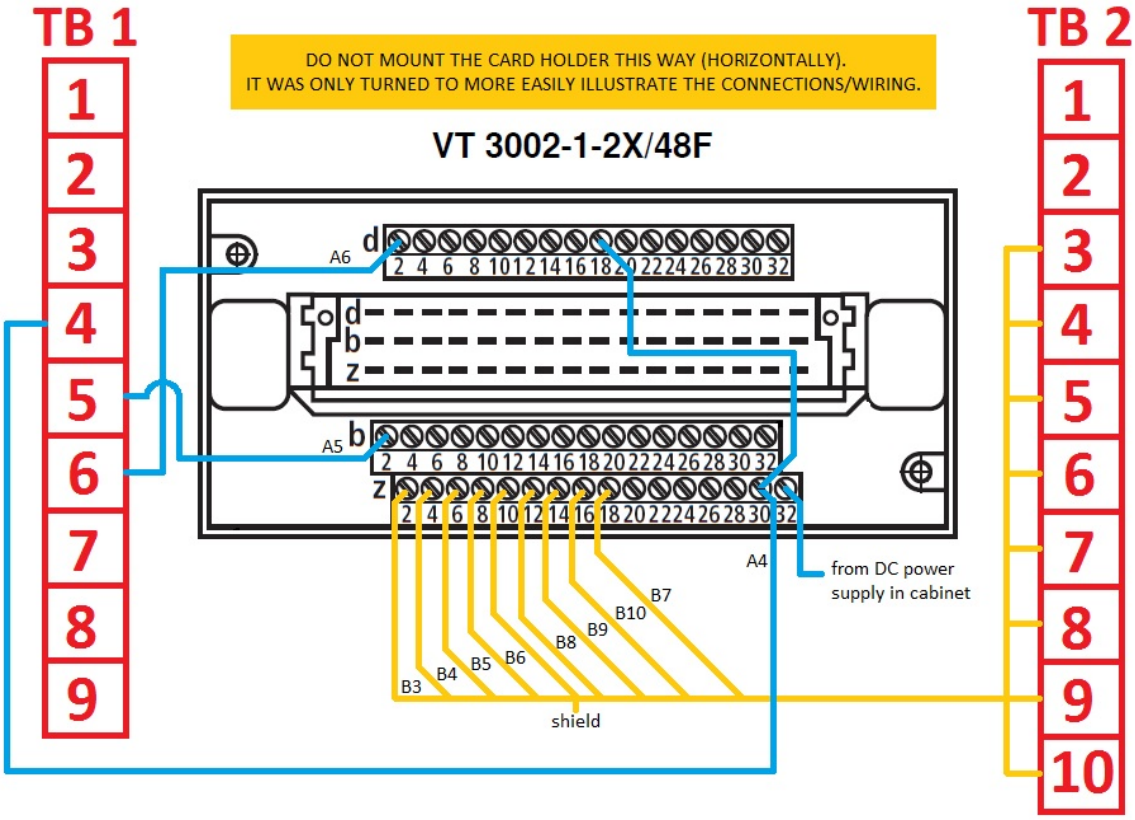

FIGURE 5. CARD HOLDER WIRING DIAGRAM

4. NOTES

This section is not applicable to this work item.

WORK ITEM 41: Single Point Davit Ladder, Renew

1. SCOPE

1.1 Intent. This work item describes the requirements for the Contractor to renew the ladder on the Appleton Marine single point small boat davit.

1.2 Government-furnished property.

None.

2. REFERENCES

COAST GUARD DRAWINGS

Coast Guard Drawing 225B-WLB-601-001, Rev P, General Arrangements, Inboard and Outboard Profiles

Coast Guard Drawing 225B-WLB-623-001, Rev H, Ladders - Vertical

COAST GUARD PUBLICATIONS

Coast Guard Technical Publication (TP) 3720, 01-AUG-2024, Single Point Slewing Arm Davit Model RAD30 – 15.5, Operation, Maintenance, & Repair Instructions, Appleton Marine

Surface Forces Logistics Center Standard Specification 0000 (SFLC Std Spec 0000), 2022, General Requirements

Surface Forces Logistics Center Standard Specification 0740 (SFLC Std Spec 0740), 2022, Requirements for Welding and Allied Processes

Surface Forces Logistics Center Standard Specification 6310 (SFLC Std Spec 6310), 2022, Requirements for Preservation of Ship Structures

OTHER REFERENCES

None.

3. REQUIREMENTS

3.1 General. The intent of this work item is to renew the ladder on the Appleton Marine single point small boat davit.

3.1.1 CIR.

None.

3.1.2 Tech Rep.

Not applicable.

3.1.3 Protective measures. The Contractor must furnish and install all protective measures in accordance with SFLC Std Spec 0000, paragraph 3.3.3 (Vessel component, space, and equipment protection).

3.1.4 Interferences. The Contractor must handle all interferences in accordance with SFLC Std Spec 0000, paragraph 3.3.5 (Interferences). Known interferences include, but are not limited to the following:

- Handrails
- Decks
- Non-skid coating on adjacent deck surfaces
- Piping

3.2 Removal. The Contractor must remove the ladder of the single point small boat davit from the davit pedestal in accordance with SFLC Std Spec 0740. The small boat davit is located at Frame 94 on 02 Level Weather Deck 02-77-0-D, as noted on Coast Guard Drawing 225B-WLB-601-001 and Figure 1. Retain the ladder for renewal.

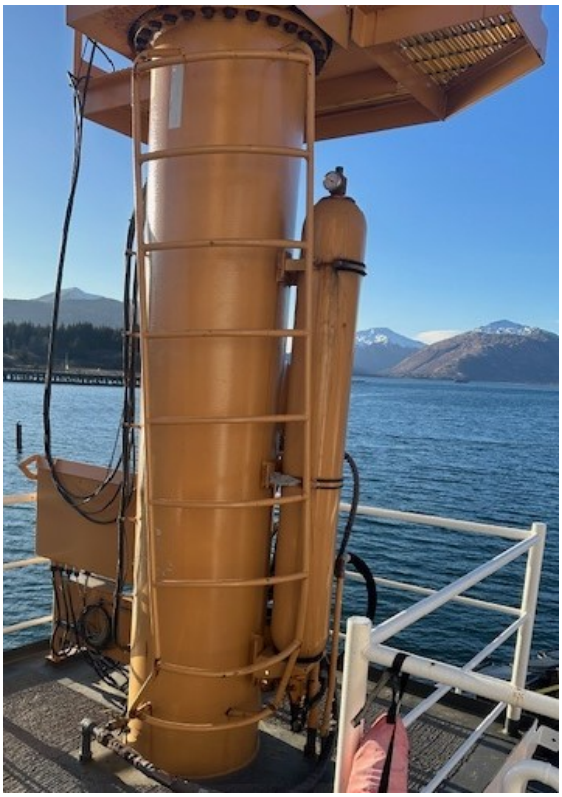

FIGURE 1. APPLETON MARINE SINGLE POINT SMALL BOAT DAVIT.

3.3 Renewal. The Contractor must renew existing ladder in accordance with SFLC Std Spec 0740. The Contractor is authorized to crop corroded and bent sections of the ladder and repair with equivalently sized material. Submit a CFR if existing ladder is incapable of repair.

3.3.1. Upon verification with Coast Guard Inspector that the existing ladder is incapable of repair, utilize existing ladder as a template, fabricate a new ladder in accordance with drawing AMD-1525 of TP 3720 and SFLC Std Spec 0740, and discard existing ladder.

3.3.2. Reinstall ladder to the single point davit pedestal in accordance with drawing AMD-1525 of TP 3720 and SFLC Std Spec 0740.

3.4 Boundary test, generic. The Contractor must verify the integrity of all boundaries affected by this work item using one of the methods described in SFLC Std Spec 0740, Appendix C. Submit a CFR.

3.5 Touch-up preservation. The Contractor must prepare and coat all new and disturbed surfaces to match existing adjacent surfaces in accordance with SFLC Std Spec 6310, paragraph 3.1.13 (Touch-ups and minor coating repairs.)

3.6 Gas freeing. When entering a tank, compartment, confined space, or conducting hot work, refer to and comply with SFLC Std Spec 0000, General Requirements.

3.7 Welding and brazing. Perform all welding, brazing, and non-destructive testing (NDT) in accordance with SFLC Std Spec 0740, Welding and Allied Processes.

3.8 Material disposal. The Contractor shall dispose of all removed material not designated for reinstallation in accordance with all Federal, State, and Local requirements.

4. NOTES

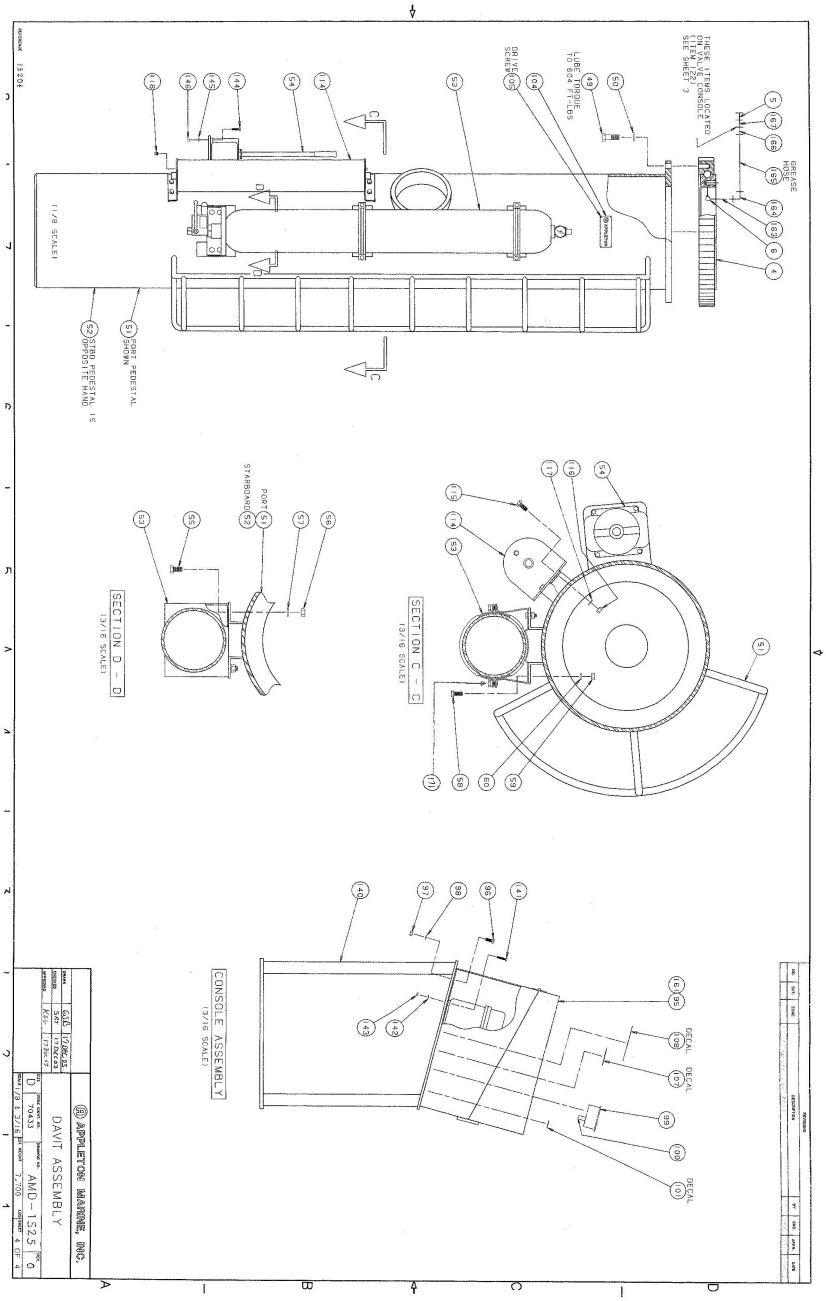

FIGURE 2. DRAWING AMD-1525 EXCERPTED FROM TECHNICAL PUBLICATION 3720

WORK ITEM 42: Port Anchor Windlass, Inspect and Service

1. SCOPE

1.1 Intent. This work item describes the requirements for the Contractor to inspect and service the port Appleton Model BMD-478 Anchor Windlasses.

NOTE
Cutter crew reports that their port anchor windlass has a recurring issue where the unit gets stuck or seized and requires significant force to release, often through the use of external means like chain falls.
Intent of this work is to identify and correct this issue.

1.2 Government-furnished property.

None.

2. REFERENCES

COAST GUARD DRAWINGS

Coast Guard Drawing 225B WLB 581-001, Rev C, Anchor Handling System Arrangement

COAST GUARD PUBLICATIONS

Coast Guard Technical Publication (TP) 3559, SWBS 581B, Anchor Windlass, P/S - Model BMD-478

Surface Forces Logistics Center Standard Specification 5000 (SFLC Std Spec 5000), 2022, Auxiliary Machine Systems

OTHER REFERENCES

None

3. REQUIREMENTS

3.1 General.

3.1.1 CIR. The Contractor must submit a CIR for the inspections listed in Table 1:

- Task # 1.

3.1.2 Tech Rep.

Not applicable.

3.1.3 Protective measures. The Contractor must furnish and install all protective measures in accordance with SFLC Std Spec 0000, paragraph 3.3.3 (Vessel component, space, and equipment protection).

3.1.4 Interferences. The Contractor must handle all interferences in accordance with SFLC Std Spec 0000, paragraph 3.3.5 (Interferences). Known interferences include, but are not limited to the below-listed:

- Port anchor (remove at the swivel shot).
- Port anchor chain.

NOTE

Each anchor weighs 2,250 pounds and each chain is 1-1/8 inch Stud-Link, Grade III with a length of 7 shots.

3.2 Inspection and repair. The Contractor must accomplish the tasks specified in Table 1, in accordance with SFLC Std Spec 5000, TP 3559 SWBS 581B, and Coast Guard Drawing 225B WLB 581-001.

TABLE 1 – RECURRING MAINTENANCE REQUIREMENTS

				ADDITIONAL REQUIREMENTS	
#	**TASK TYPE**	**QTY**	**COMPONENT OR ASSEMBLY**	**APPENDIX AND PARA. FROM SFLC STD SPEC 5000**	**OTHER**
1	Operate and Inspect	1	Anchor Windlass Assembly	3.2.1 (Operate and inspect)	Submit a CIR. Report and instances of seizing, binding, or resistance to movement.
2	Service and Inspect	1	Anchor Windlass Assembly	3.2.2 (Service and inspect)	Submit a CFR. Identify source of seizing. If further disassembly is required, submit a CR detailing plan for disassembly and rationale.
3	Groom and Lubricate	1	Anchor Windlass Assembly	3.2.6 (Groom and lubricate)	
4	Final Operational and/or weight test	1	Anchor Windlass	B2.5 (Anchor windlass)	Submit a CFR.
5	Fabricate and Install	1	Label plate	B2.9 (label plates)	System: Anchor Windlass

4. NOTES

This section is not applicable to this work item.

WORK ITEM 43: Dining Provide

1. SCOPE

1.1 Intent. This work item describes the requirements for the Contractor to provide temporary dining and lodging for Coast Guard personnel.

1.2 Government-furnished property.

None.

2. REFERENCES

COAST GUARD DRAWINGS

None

COAST GUARD PUBLICATIONS

Culinary Operations Management, COMDTINST 4061.5 (series)

OTHER REFERENCES

CFR Title 41, Public Contracts and Property Management

Public Law 101-391, 1990, Hotel and Motel Fire Safety Act

Hotel-Motel National Master List, https://apps.usfa.fema.gov/hotel/

AAA/CAA - http://newsroom.aaa.com/diamond-ratings/diamond-rating-definitions/

FORBES (formerly MOBIL) Travel Guide - http://www.forbestravelguide.com/

3. REQUIREMENTS

3.4 Dining requirements. The Contractor must provide healthy, appetizing, and nutritious dining options for 3 meals a day per COMDTINST 4061.5 (series). The Contractor must provide a minimum of **3** breakfast dining facilities, **3** lunch dining facilities, and **4** dinner dining facilities. Dining shall include all wait staff gratuities for up to 50 Coast Guard personnel. The breakfast and dinner dining facilities must be within a **5** mile radius of the crew's primary lodging location, and at least **3** lunch dining facilities must be within a **5** mile radius of the shipyard or Pier side location. **NOTE**: ***Continental meals provided by a lodging facility are not acceptable meal options and shall not be used to satisfy the forementioned minimal dining facility requirements.***

NOTE

Due to the sparsely populated region of this requirement, the Coast Guard will accept a single physical "facility" as a meeting this part of the requirement. This does not allow a single option for each meal to suffice, still required are 3 different breakfast providers, 3 different lunch providers, and 4 different dinner providers, preserving the crew's options for meals.

3.4.1 Commencement and completion. Dining must commence **01 September 2026** at lunch and end **11 November 2026** after breakfast**.**

3.4.2 Breakfast. The combined options across dining facilities must at a minimum include the following for each breakfast:

- A choice of two whole fresh fruits.
- A choice of three fruit juices.
- A choice of whole or low fat milk.
- A choice of two cereals.
- Eggs cooked to order.
- Pancakes, French toast or waffles.
- Bacon or another breakfast meat.
- A choice of potatoes or grits.
- A choice of toast or pastry.
- A choice of coffee or tea.
- Butter, margarine, syrup and jelly or jam.

3.4.3 Lunch and dinner. Each lunch and dinner must include a choice of three different hot entrées. Entrée choices must vary in a manner not to repeat within a 3-day period. The combined options across dining facilities must include the following daily entrée choices:

- Poultry (baked and grilled options must be available upon request, in lieu of battered and/or fried).
- Beef or pork
- Fish or shellfish (baked and grilled options must be available upon request, in lieu of battered and/or fried).
- Vegetarian alternative options
- A choice of soup or salad, with crackers & regular &/or low fat dressing. Soup choices must not repeat within a 3-day period.
- A choice of potatoes or pasta with accompanying sauces.
- A choice of two vegetables.
- Water and a choice of beverages.
- A choice of breads; and a choice of butter or margarine.
- A choice of three different desserts or whole fresh fruit.

3.4.4 Take-out meals. The Contractor must substitute carry-out meals for up to **50** Coast Guard personnel for breakfast, lunch and/or dinner, when designated by the Contracting Officer's Representative (COR). The Contractor must coordinate pick up times and location with the COR. Lunch carry-out meals must include either hot meals as detailed in paragraph 3.4.3 or a box lunch which must include:

- A sandwich with a choice of three different options of deli meat on a choice of breads or wraps (including choice of condiments).
- A bag of chips.
- Potato, pasta or garden salad with dressing.
- A dessert with a choice of two options, including fresh whole fruit as one option.
- A beverage from a choice of soda, diet soda, bottled water and juices.

3.5 Dining Facility. The Contractor provided dining facilities must be for the sole purpose of dining, and must be available to the crew for no less than 3 hours per meal.

3.6 Commercial Standards. The Contractor must meet, at a minimum, the requirements of Recommend for a Forbes (formerly Mobil) Travel Guide rating or three diamonds (♦♦♦) for an American Automobile Association (AAA) rating for dining and lodging.

4. NOTES

None.

WORK ITEM 44: Lodging Provide

1. SCOPE

1.1 Intent. This work item describes the requirements for the Contractor to provide temporary dining and lodging for Coast Guard personnel.

1.2 Government-furnished property.

None.

2. REFERENCES

COAST GUARD DRAWINGS

None

COAST GUARD PUBLICATIONS

Culinary Operations Management, COMDTINST 4061.5 (series)

OTHER REFERENCES

CFR Title 41, Public Contracts and Property Management
Public Law 101-391, 1990, Hotel and Motel Fire Safety Act
Hotel-Motel National Master List, https://apps.usfa.fema.gov/hotel/
AAA/CAA - http://newsroom.aaa.com/diamond-ratings/diamond-rating-definitions/
FORBES (formerly MOBIL) Travel Guide - http://www.forbestravelguide.com/

3. REQUIREMENTS

3.1 Lodging requirements. The Contractor must provide quality temporary lodging, for **50** Coast Guard personnel within a **5**-mile radius of the contractor provided shipyard or pier/dockside location.

3.1.2 Occupancy particulars. Provide **24** double-bedded rooms and **03** single occupancy rooms for Coast Guard personnel.

3.1.3 Commencement and completion. Ensure that lodging must commence **01 September 2026** and terminate **11 Nov 2026** unless option items are executed**.**

3.2 Regulations and standards. The Contractor must ensure that all lodging facilities provided must meet the following minimum standards:

- Meet the Hotel and Motel Fire Safety Act of 1990 (PL101-391) and be listed on the Hotel-Motel Master List (see 4.1 (Hotel and Motel Fire Safety Act of 1990 (PL101-391))).
- Lodging Facility must be within **5** miles of the Dry-dock location or Dockside location.
- Facility must meet at a minimum the requirements of either three stars for a Forbes (formerly Mobil) Travel Guide rating or three diamonds for an American Automobile Association (AAA) rating at time of proposal.
- Full indoor laundry facility on premises with 24/7 guest access.
- Full access and use of a workout facility or fitness center in designated exercise room w/ dedicated equipment specialized for the use of working out. At a minimum the facility shall include assorted free weights, 3 aerobic machines (e.g. treadmill, rowing machine, elliptical machine, weight machine, free weights etc.) and assorted strength machines for all primary muscle groups (e.g., legs, arms, chest, back, etc). The facility must be either on the lodging facility premises or within walking distance (not to normally exceed1/2 mile(s) or 5-minute commute via vehicle).
- Access to internet in all rooms.
- Minimum maid service and cleaning every third day.
- Iron and Ironing Board in every room.
- Full Bath in every room.
- Microwave, coffeemaker and refrigerator in every room.
- Personal belongings safe in every room.
- Lodging facility room entrances must be accessible only by internal hallway(s). The internal hallway(s) must have locked exterior doors, accessible by key-holding facility guests only. Internal hallway(s) must be accessible by the berthing facility's lobby. The lobby must be staffed by a front desk attendant 24 hours a day and 7 days a week.

3.3 Parking. The Contractor must ensure that the lodging facility have parking available for a minimum of **6** vehicles during the entire duration of the stay.