SOLICITATION/CONTRACT/ORDER FOR COMMERCIAL PRODUCTS AND COMMERCIAL SERVICES

NOTE: OFFEROR TO COMPLETE BLOCKS 12, 17, 23, 24, AND 30.

1. REQUISITION NUMBER

2. CONTRACT NUMBER

3. AWARD/EFFECTIVE DATE

4. ORDER NUMBER

5. SOLICITATION NUMBER: W912DW26QA036

6. SOLICITATION ISSUE DATE

7. FOR SOLICITATION INFORMATION CALL:

a. NAME: DELLA OVERTON

b. TELEPHONE NUMBER *(No collect calls)*: (206) 316-3168

8. OFFER DUE DATE/ LOCAL TIME: 13 APR 2026 11:00 AM

9. ISSUED BY — CODE W912DW

W071 ENDIST SEATTLE
KO CONTRACTING DIVISION, 4735 EAST MARGINAL WAY SOUTH
SEATTLE, WA 98134-2329
UNITED STATES
DELLA OVERTON, EMAIL: DELLA.S.OVERTON@USACE.ARMY.MIL
TELEPHONE: (206) 316-3168

10. THIS ACQUISITION IS
- [x] SMALL BUSINESS
- [ ] HUBZONE SMALL BUSINESS
- [ ] SERVICE-DISABLED VETERAN-OWNED SMALL BUSINESS (SDVOSB)
- [ ] UNRESTRICTED OR
- [ ] WOMEN-OWNED SMALL BUSINESS (WOSB)
- [ ] ECONOMICALLY DISADVANTAGED WOMEN-OWNED SMALL BUSINESS (EDWOSB)
- [ ] 8(A)
- [x] SET ASIDE: 100 % FOR:

NORTH AMERICAN INDUSTRY CLASSIFICATION STANDARD (NAICS): 811310

SIZE STANDARD: USD 12,500,000.00

11. DELIVERY FOR FREE ON BOARD (FOB) DESTINATION UNLESS BLOCK IS MARKED
- [ ] SEE SCHEDULE

12. DISCOUNT TERMS

13a. THIS CONTRACT IS A RATED ORDER UNDER THE DEFENSE PRIORITIES AND ALLOCATIONS SYSTEM - DPAS (15 CFR 700) [ ]

13b. RATING

14. METHOD OF SOLICITATION
- [x] REQUEST FOR QUOTE (RFQ)
- [ ] INVITATION FOR BID (IFB)
- [ ] REQUEST FOR PROPOSAL (RFP)

15. DELIVER TO — CODE

SEE SCHEDULE

16. ADMINISTERED BY — CODE

17a. CONTRACTOR/ OFFEROR — CODE — FACILITY CODE

TELEPHONE NUMBER

18a. PAYMENT WILL BE MADE BY — CODE

17b. [ ] CHECK IF REMITTANCE IS DIFFERENT AND PUT SUCH ADDRESS IN OFFER

18b. SUBMIT INVOICES TO ADDRESS SHOWN IN BLOCK 18a UNLESS BLOCK BELOW IS CHECKED [ ] SEE ADDENDUM

19. ITEM NUMBER	20. SCHEDULE OF SUPPLIES/SERVICES	21. QUANTITY	22. UNIT	23. UNIT PRICE	24. AMOUNT
	SEE CONTINUATION *(Use Reverse and/or Attach Additional Sheets as Necessary)*				

25. ACCOUNTING AND APPROPRIATION DATA

SEE CONTINUATION

26. TOTAL AWARD AMOUNT *(For Government Use Only)*

- [x] 27a. SOLICITATION INCORPORATES BY REFERENCE (FEDERAL ACQUISITION REGULATION) FAR 52.212-1, 52.212-4. FAR 52.212-3 AND 52.212-5 ARE ATTACHED. ADDENDA — [x] ARE [ ] ARE NOT ATTACHED
- [ ] 27b. CONTRACT/PURCHASE ORDER INCORPORATES BY REFERENCE FAR 52.212-4. FAR 52.212-5 IS ATTACHED. ADDENDA — [ ] ARE [ ] ARE NOT ATTACHED

[ ] 28. CONTRACTOR IS REQUIRED TO SIGN THIS DOCUMENT AND RETURN _____ COPIES TO ISSUING OFFICE. CONTRACTOR AGREES TO FURNISH AND DELIVER ALL ITEMS SET FORTH OR OTHERWISE IDENTIFIED ABOVE AND ON ANY ADDITIONAL SHEETS SUBJECT TO THE TERMS AND CONDITIONS SPECIFIED

[ ] 29. AWARD OF CONTRACT: REFERENCE _____ OFFER DATED _____. YOUR OFFER ON SOLICITATION (BLOCK 5), INCLUDING ANY ADDITIONS OR CHANGES WHICH ARE SET FORTH HEREIN, IS ACCEPTED AS TO ITEMS: SEE CONTINUATION

30a. SIGNATURE OF OFFEROR/CONTRACTOR

31a. UNITED STATES OF AMERICA *(SIGNATURE OF CONTRACTING OFFICER)*

30b. NAME AND TITLE OF SIGNER *(Type or print)*

30c. DATE SIGNED

31b. NAME OF CONTRACTING OFFICER *(Type or print)*

31c. DATE SIGNED

Solicitation/Contract Form Continuation

Instrument Name: AFD CO2 Cylinder Hydrostatic Testing

QUOTER INSTRUCTIONS

1. The Solicitation (RFQ) Number is: **W912DW26QA036** as described in Block 5 of this solicitation (page 1). The title is AFD CO2 Cylinder Hydrostatic Test.

2. Per Block 10 of this solicitation (page 1) this is a 100% small business set-aside. The NAICS code for this requirement is 811310 - Commercial and Industrial Machinery and Equipment (except Automotive and Electronic) Repair and Maintenance (Fire Extinguisher Repair and Maintenance, without Installation) with a size standard of $12.5M. The PSC is S202 - Housekeeping - Fire Protection.

3. See the Scope of Work (SOW) for a complete description of this requirement.

4. Closing Date and Time Due: 13 April 2026 NLT 1100 PST.

5. Award will be made as a Firm-Fixed Priced Purchase Order to the lowest priced quote whose quote conforms to the requirement of the solicitation and where price has been determined fair and reasonable. The quoter must provide pricing for ALL items in the solicitation for its quote to be acceptable to the Government. Quotes must set forth full, accurate and complete information as required by the RFQ.

Multiple quotes are not accepted for this RFQ. If multiple quotes are received only one quote (as determined by the Contracting Officer) will be evaluated by the Government. The quote shall be determined acceptable based on the date and time received.

The contractor should list any special features or warranty information applicable to the quoted product(s).

6. Quotes shall be emailed to della.s.overton@usace.army.mil with the subject line "**RFQ W912DW26QA036**". All questions resulting from this RFQ shall be submitted by close of business two (2) days prior to the closing date. For questions email the aforementioned email address. For timely submitted inquiries, responses may be posted as an amendment to the solicitation via Contract Opportunities website at www.sam.gov prior to the RFQ closing date. Quoters are responsible for reviewing the Contract Opportunities website for any posted amendments to the RFQ.

7. PROSPECTIVE OFFERORS: Contractors shall be registered in the System for Awards Management (SAM) prior to award of a contract or agreement resulting from solicitations.

"Registered in the System for Award Management (SAM) database" means that -

(1) The Offeror has entered all mandatory information, including the unique entity identifier and the EFT indicator, if applicable, the Commercial and Government Entity (CAGE) code, as well as data required by the Federal Funding Accountability and Transparency Act of 2006 (see subpart 4.14), into the SAM database.

(2) The offeror has completed the Core, Assertions, and Representations and Certification, and Points of contact sections of the registration in the SAM database.

(3) The Government has validated all mandatory data fields, to include validation of the Taxpayer Identification Number (TIN) with the Internal Revenue Service (IRS). The Offeror will be required to provide consent for TIN validation to the Government as a part of the SAM registration process.

(4) The Government has marked the record "Active".

This rule more efficiently implements the Debt Collection Improvement Act of 1996, as it requires contractors to be registered in SAM for consideration of future solicitations, awards, and payment. Registration is required prior to award of a contract, basic agreement, basic ordering agreement, or blanket purchase agreement from a solicitation. LACK OF REGISTRATION IN THE SAM DATABASE WILL MAKE AN OFFER INELIGIBLE FOR AWARD. The web site may be accessed at www.sam.gov.

Offerors are hereby notified of the following requirements concerning the Cybersecurity Maturity Model Certification (CMMC) program. Compliance with the specified CMMC level is a condition for contract award and for the duration of the contract.

(1) CMMC Program Overview:

The CMMC program is a Department of War initiative to protect Federal Contract Information (FCI) and Controlled Unclassified Information (CUI) that is handled by contractors. The program requires contractors to implement specific cybersecurity standards and, in some cases, undergo assessments to verify compliance. The CMMC program has three levels of certification.

(2) Applicable CMMC Level for this Solicitation:

* CMMC Level 1 (Self-Assessment): This level is required for contractors that will handle Federal Contract Information (FCI). Offerors must have a current self-assessment and an annual affirmation of compliance with the security requirements specified in RFO 252.204-7021.

(3) To be eligible for award, an offeror must have a current CMMC status at or above the level specified in this solicitation posted in the Supplier Performance Risk System (SPRS) (https://piee.eb.mil). Contracting Officers will verify the offeror's CMMC status in SPRS prior to contract award.

(4) Contractors are required to maintain their CMMC status for the duration of the contract, including any option periods. This includes performing annual self-assessments and affirmations of continuous compliance in SPRS.

8. ELECTRONIC FUNDS TRANSFER (EFT): The Government will make all payments by EFT.

The USACE Finance Center (UFC) has altered their process for obtaining electronic funds transfer (EFT) banking information utilized for vendor contract payment and will no longer accept UFC Form 23 to update EFT banking information for vendors. Banking information for all vendors will be retrieved from SAM.gov and entered into CEFMS II. There are no exceptions to this policy change. All contractors must notify the UFC via e-mail at: cefc-fc-eft@usace.army.mil when banking information has been updated in SAM.gov. Compliance with this requirement will help ensure timely payment to the correct back account.

9. State and Local Taxes

The U.S. Army Corps of Engineers is exempt from paying state and local taxes per Title 4 United States Code 104-107. The U.S. Army Corps of Engineers Tax ID Number is 62-1642142.

Contractors performing services for the U.S. Army Corps of Engineers are not exempt from state and local taxes in transactions with vendors, suppliers or subcontractors.

It is the contractor's responsibility to investigate applicable federal, state, and local taxes, along with any specific exemptions that may exist. This includes any applicable Value-Added Taxes (VAT), sales, use, and excise taxes.

The U.S. Army Corps of Engineers will not accept any invoice with a separate tax line. If there are any appropriate taxes, the contractor my considerer that tax as the cost of doing business and incorporate that cost within the cost of the item or job.

10. Submittals MUST include:

a) Signed and dated STANDARD FORM 1449 (Solicitation/ Contract/ Order for Commercial Items). See blocks 30a, b, and c.

b) Signed and dated STANDARD FORM 30, if applicable, for any Amendments to the solicitation. See blocks 15a, b, and c.

c) Completed pricing information for all CLIN items.

d) Completed full text clauses that require fill-in information.

e) Required items in #11 below.

11. The contractor is required to provide the following information with your quote:

Federal Taxpayer's ID Number (EIN): _____

Unique Entity ID (UEI):_____

Cage Code Number _____

Remit to Address: _____

Company Name: _____

DBA: _____

Address: _____

City/State/Zip: _____

Phone & Fax Numbers: _____

Point of Contact: _____

E-Mail Address: _____

Scope of Work

CO2 Cylinder Inspection
Hydrostatic Testing & Recertification

Albeni Falls Dam | Seattle District
U.S. Army Corps of Engineers

1. General: This contract is to provide inspection and recertification items and services for high-pressure carbon dioxide cylinders used in a fire suppression system at Albeni Falls Dam (AFD).

2. Description of Services: Contractor is to provide all parts, labor, materials, personnel, transportation (pickup from and delivery to AFD), perform hydrostatic testing, and refilling of the CO2 cylinders as described in this scope of work (SOW).

   AFD and the government invoke the requirements of the Code of Federal Regulations 49 CFR 180.205, *General Requirements for Requalification of Specification Cylinders*, as applicable.

3. Type of Contract: Firm Fixed Price

4. Background: The cylinders of this contract supply pressurized CO2 to the fire suppression system in AFD's electrical power generation units. The system uses 48-each, 75-pound CO2 cylinders. During normal operation, 48 cylinders are connected to the system, and a minimum of 48 spare cylinders are held in reserve. AFD has approximately 14 extra cylinders for a total of 62 cylinders that may require evaluation.

5. Period of Performance: The contractor shall begin work immediately after notice of award and finish no later than 30 June 2026.

6. Place of Performance: Cylinder pickup and delivery will take place at:

   Albeni Falls Dam
   Powerhouse Entrance
   2376 East Highway 2
   Oldtown, Idaho 83822

   Please note that pickup and delivery shall occur Monday through Thursday, from 7:00 AM until 3:30 PM. AFD personnel will stage the cylinders for the Contractor at or near the public entrance.

   No pickups and deliveries are allowed on Fridays, Saturdays or Sundays or on federal holidays.

7. Points of Contact (POC):

7.1. Invoicing and Payment:

U.S. Army Corps of Engineers
Albeni Falls Dam
Attn: Christine Kimel, Contract Performance Specialist
2376 East Highway 2
Oldtown, Idaho 83822
Phone: 509-437-3133, x7232
Email: Christine.M.Kimel@usace.army.mil

7.2. Technical:

U.S. Army Corps of Engineers
Albeni Falls Dam
Attn: Jeff Smutny, Mechanical Engineer
2376 East Highway 2
Oldtown, Idaho 83822
Phone: 509-437-3133, x7223
Email: Jeffrey.D.Smutny@usace.army.mil

8. Scope of Work: Offeror shall quote each of the following CLINs.

8.1. CLIN 001 – Transport, Evaluation & As-found Reporting

- Take possession of CO_2 cylinders at Albeni Falls Dam. Total quality may vary depending on the number of cylinders available. There will be at least 48 cylinders and at most 62 cylinders.
- Transport the cylinders to Contractor's facility.
- Empty each cylinder, reclaiming the CO_2.
- Remove valve, visually inspect cylinder inside and out for pitting, corrosion or other damage.
- Fill each cylinder with water and hydrotest each cylinder to 150% of the normal working pressure.
- Measure the expansion of each cylinder. If the allowable limit of permanent deformation is exceeded, mark the cylinder as unserviceable.
- Make the overall determination of each cylinder's integrity and fitness for service and document accordingly.
- Evaluate each valve, determine if rebuilding is possible. If not, note that valve replacement is required.
- Compile an as-found inspection report for each cylinder. One report is adequate for the entire lot, but each cylinder shall be identified by serial number or most recent recertification stamp.
- Submit the As-Found Report for all cylinders and valves to the Albeni Falls POCs.

8.2. CLIN 002 – Rebuilding of Kidde Type "I" Valves

- Quote parts (rebuild kit) and labor for one (1) valve rebuild.

8.3. CLIN 003 – Replacement of Kidde Type "I" Valve

- Quote price for one (1) new complete valve.

8.4. CLIN 004 – Replacement of 75-Pound Cylinder Assembly
- Quote price for one (1) new complete cylinder with valve.

8.5. CLIN 005 – Replacement of 75-Pound Cylinder
- Quote price for one (1) new cylinder (cylinder only, no valve).

8.6. CLIN 006 – Documentation and Recertification of Cylinders & Valves
- Quote price for complete documentation of work performed.
- The recertification record(s) shall identify each cylinder assembly, describe the work performed on each cylinder, and state that cylinder and valve are serviceable.
- It is permissible for Contractor to submit one record for each cylinder and valve, or to submit one document that contains the individual recertification information for the full lot of cylinders and valves.

9. Quality Control:

9.1. The cylinders will be inspected by the AFD Quality Assurance Representative (QAR) prior to the contractor taking custody of the cylinders.
9.2. To the extent possible, the QAR will ensure that the cylinders are not damaged, are serviceable, and are suitable for testing, refilling, and re-certification.
9.3. At the time of return, each cylinder will be inspected for proper stamped markings, decals, and required documentation.

10. Definitions:

Contractor: A supplier or vendor awarded a contract to provide specific supplies or service to the government. The term used in this contract refers to the prime.

Contracting Officer: A government employee with the authority to enter into, administer, and or terminate contracts, and make related determinations and findings on behalf of the government. Note: The Contracting Officer is the only individual who can legally bind the government.

11. Government Furnished Items & Equipment:

11.1. The Government (Albeni Falls Dam) will provide a minimum of 48-each, 75-pound CO2 cylinders up to a maximum of 62-each, 75-pound CO2 cylinders. The Contractor should be prepared to transport 62 cylinders.
11.2. All cylinders are equipped with Kidde High-Pressure CO2 Fire Suppression Valves. See Appendix for the current technical datasheet.
11.3. All cylinders are assumed to be full, or nearly full, of carbon dioxide. All cylinders are complete with HPCO2 valves and protective cylinder 'bottle' caps. See Appendix for the cylinder technical datasheet.

12. Site-Specific Safety & Occupational Health Plan: For this contract, no safety or occupation health plan is required. The Contractor, or their subcontractor, will take possession of the

cylinders at the public entrance to the powerhouse. No on-site contracted activities are anticipated.

13. Hazardous Waste: No hazardous waste will be produced on government property. Therefore, no hazardous waste training is required. No off-site hazardous waste is expected to be produced during the execution of this contract. However, if hazardous waste is produced, the proper handling and disposal is the sole responsibility of the Contractor.

Appendix B
Quality Assurance Surveillance Plan

Performance Objective	*Standard*	**Performance Threshold**	**Method of Surveillance**
All requested certifications received by Corps: hardcopies delivered with recertified and refilled cylinders; digital copies delivered via email.		Zero Deviation from Standard	100% Inspection
All cylinders bear updated markings and decals indicating recertification and date of recertification.		Zero Deviation from Standard	100% Inspection
System is re-energized, confirmed to be fully functional.		Zero Deviation from Standard	100% Inspection
Contractor locks are removed, Contractor is signed off clearance, and system is released to AFD personnel.		Zero Deviation from Standard	100% Inspection

Kidde Fire Systems

High Pressure Carbon Dioxide Fire Suppression System

Effective: October 2024
K-81-1000 Rev AA

Kidde Fire Systems High Pressure Carbon Dioxide ($HPCO_2$) fire suppression system is the ideal fire suppression solution for heavy and light industrial applications where unoccupied spaces or assets need protection, where CO_2 is an acceptable agent and other agents would be cost prohibitive, and where in addition to the primary total flooding design, a local application system may be required. CO_2 agent is stored in seamless steel cylinders as a liquid under its own vapor pressure and at ambient temperature.

FEATURES

Environmentally safe

- CO_2 is naturally occurring gas
- Global Warming Potential (GWP) of One (1)
- Ozone Depletion Potential (ODP) of Zero (0)

Since CO_2 is a gas, it can penetrate and spread to all parts of the protected area. As a gas or as a finely divided solid called 'snow' or 'dry ice', CO_2 will not conduct electricity and therefore, can be used on energized electrical equipment. CO_2 also leaves no residue, thus eliminating cleanup of the agent itself. Additionally, CO_2 is low-cost, therefore can be used on deep-seated fires and oils, fats and greases where larger agent quantities are required. CO_2 Suppression system is the only clean agent system that can be used for deep seated fires.

A sampling of industries using Cardox $LPCO_2$ include:

- Manufacturing
  - Automotive Plants
  - Cement Plants
  - Industrial Food Fryers
- Power Generation
  - Turbine Enclosures
  - Coal Handling Systems
  - Fume Handling Systems
  - High Voltage Switchgear
- Metals
  - Rolling Mills
  - Metal Processing
- Other Industries
  - Printing Presses
  - Flammable Materials Storage
- Marine Applications
  - Engine Rooms
  - Electrical Rooms
  - Paint Vaults

A choice of hardware profiles to suit various application types and requirements:

- Cylinder Sizes:
  - Small: 25, 35, lb.
  - Medium: 50, 75 lb.
  - Large: 100, 123* lb.

Note *: Availability to be announced.

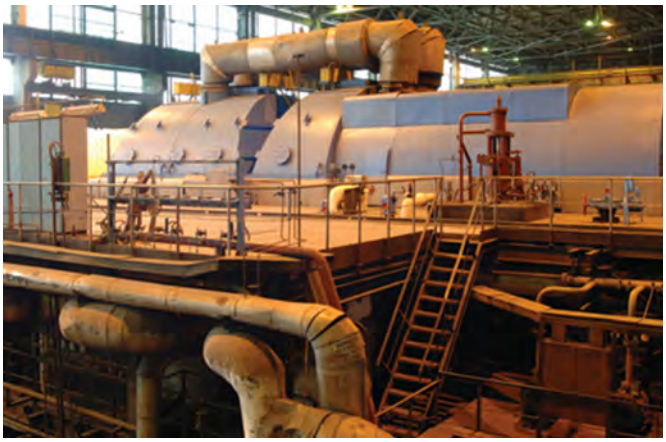

- Cylinder Orientation
  - 25, 35. & 50 lb.: Mounted horizontally or vertically (Bent Siphon Tube), Valve size: 1/2"
  - 75, 100, & 123 lb.: Mounted vertically, Valve size 5/8"
- System Actuation:
  - Primary: By Control Heads
  - Secondary: By back-pressure without additional hardware
- Stop (Directional) Valve. Sizes Offered: 1/2" to 4"
- Lockout Valve. Sizes Offered: 1/4" to 4"
- Nozzle Types Offered: S & Flanged S, M, V & Flanged V, and L
- Safety Accessories for Occupiable Areas:
  - Mechanical Discharge Delay
  - Pressure Operated Siren
  - Signage for various types

Wide operating temperature

- Range of -10 to 130 °F (-23 to 54 °C) allows extreme installation environments.

Specify with confidence!

- UL Listed
- FM Approved
- USCG Approved

Suppression System Configuration

$HPCO_2$ systems may be configured for total flooding, local application, or both.

Total Flooding: In a total flooding system, a predetermined amount of CO_2 is discharged through fixed piping and nozzles into an enclosed space or enclosure around the hazard. Total flooding is applicable when the hazard is totally enclosed and when all openings surrounding the hazard can be closed automatically prior to or at the start of system discharge. If all the openings cannot be closed, additional CO_2 must be provided to compensate for agent loss through these openings during the discharge and appropriate concentration retention periods. The CO_2 concentration must be maintained for a sufficient period of time to allow the fuel and any other surfaces or equipment in contact with the fuel to cool below the ignition temperature of the combustibles.

Local Application: Local application systems differ from total flooding in that the nozzles are arranged to discharge directly onto the fire. One of the principal uses of local- application systems is to protect open tanks containing flammable liquids, but this technique can be generalized to protect three-dimensional hazards such as paint spray booths and printing presses.

CO_2 systems can also consist of hand hose lines permanently connected by means of fixed piping to a fixed supply of suppression agent. These systems are frequently provided for manual protection of small, localized equipment. Although not a substitute for a fixed system, a hose line can be used to supplement a fixed system where the hazard is accessible for manual firefighting.

Cylinder and Valve Assemblies

The agent cylinders are steel and equipped with a forged brass valve assembly which contains a safety disc device for protection against over pressurization due to elevated temperatures. Each valve is equipped with a side port that serves both as a fill connection and as a control port for attachment of a variety of Kidde Fire Systems control heads.

The threaded connection on the top of each valve mates with a discharge head to allow agent release and distribution into the system piping.

High pressure CO_2 hardware has been in service for more than 50 years. The hardware is time-tested and has gained the trust of our customers and end users.

WARNING

Cylinders are shipped from the factory with a protection cap installed that prevents impacts and damage to the valve during the transportation.

Cylinder Rack and Framing, Example Arrangement

Single and double mounting straps are available for all cylinder sizes. However to provide flexibility of installation for three or more cylinders, three different styles of framing arrangements available:

Arrangement A

This style (Figure 1) is used for a single row of cylinders, that can be either wall mounted or free standing.

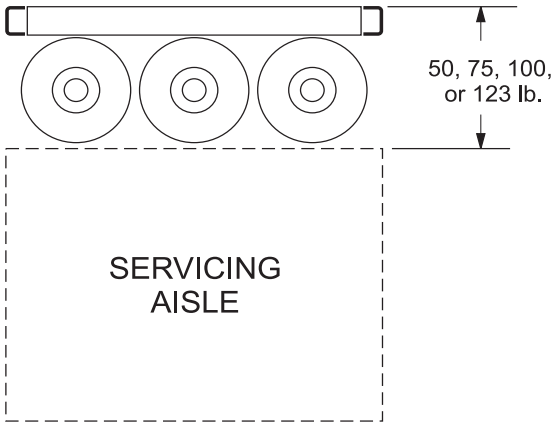

Figure 1. Multiple Cylinder Mounting, Arrangement A

Arrangement B

This style (Figure 2) provides for one row of cylinders on each side of the framing. This arrangement is free standing and requires two aisles. It has the advantage of permitting free access to any cylinder without disturbing any other cylinder.

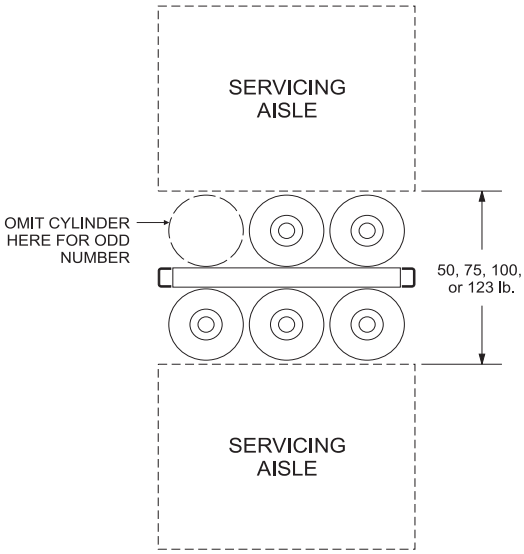

Figure 2. Multiple Cylinder Mounting, Arrangement B

Arrangement C:

This style (Figure 3) provides for a double row of cylinders on the same side of the framing. This arrangement can be free standing or wall mounted. It is generally used when the cylinders are to be wall mounted and sufficient space is not available to arrange them in a single row.

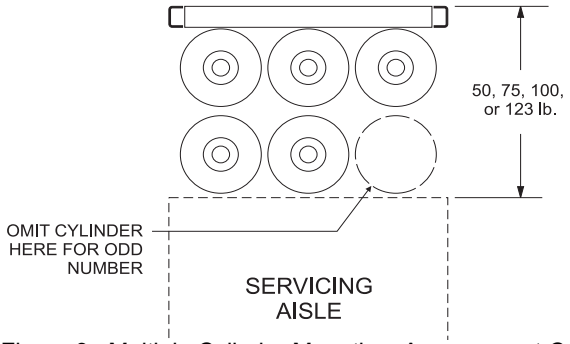

Figure 3. Multiple Cylinder Mounting, Arrangement C

Larger quantities of cylinders can be accommodated by adding additional framing. All framing is supplied with pre-drilled mounting holes. Any combination of cylinder stowage, junction box installation, pneumatic selector valve installation and cylinder manifold support can be accommodated by the holes in the framing. All bolts and nuts are supplied as part of the framing. Drilling is not required at the job site in order to erect the bracketing. In addition the cylinder manifolds are arranged to be fastened to the framing.

Discharge Manifold

$HPCO_2$ Agent cylinders can be manifolded together as an End, Center, or H setup, with additional options for a for connected Main and Reserve systems.

Figure 4. Typical Manifold Layout

Discharge Heads

Each cylinder and valve assembly must be equipped with a discharge head at installation to actuate the cylinder valve. The discharge head is assembled to the top of the cylinder valve and contains a spring-loaded piston which when actuated by CO_2 pressure is designed to depress the main check in the valve and discharge the contents of the cylinder. The piston provides the necessary mechanical advantage to open the valve's main check. The discharge outlet is designed to mate with a flexible hose or swivel adapter for connection to the distribution piping. The discharge head also contains an integral stop check whose function is to automatically prevent the loss of CO_2 during system discharge in the event that a cylinder is removed from the distribution piping. Two different style discharge heads are available:

Table 1: Discharge Heads

Plain-nut	Grooved-nut
• Discharges upon activation of its associated control head or upon application of pressure entering through the outlet • Used on each cylinder of a multiple-cylinder system • Datasheet K-81-1060	• Can only be actuated by a control head. Pressure entering the outlet will not actuate the cylinder • Used for single-cylinder, or connected single cylinder main and reserve systems • Datasheet K-81-1070

Discharge Hoses

Flexible discharge hoses are used to provide the interconnection between the discharge head and the distribution manifold or piping. The hoses are made of wire-reinforced rubber.

A 1/2 in. flexible discharge hose is used with the 25, 35, and 50 lb cylinders. The 3/4 in hose is used with the 75, 100, and 123 lb cylinders.

Figure 5. Discharge Hose

Control Heads

Actuation of the suppression system is initiated by use of control head(s). Control heads are components that attach to the control ports of the CO_2 cylinder valves. The control head initiates the suppression system discharge by opening the cylinder valve's pilot check. This allows CO_2 to pressurize the discharge head piston, which opens the main check in the valve and discharges the contents of the cylinder.

One control head is used for CO_2 systems having one or two cylinders. A minimum of two control heads are required for suppression systems that have three or more CO_2 cylinders.

Control heads are also used in conjunction with pressure operated time delays, stop valves, and pneumatic transmitters to control the flow of CO_2 throughout the piping network. All of the control heads are self-venting in the set position to prevent accidental discharge in the event of a slow build-up of pressure in a pilot line or a slow leak at the pilot check of the cylinder valve.

There are multiple types of control heads available:

Note: For more information on each control head type, see the corresponding datasheet.

Table 2: Control Heads

Lever Operated Control Head • Allows for manual operation of the cylinder. • See datasheet K-85-6005	
Lever and Pressure Operated Control Head • Allows for either manual or pressure actuation of the cylinder. • See datasheet K-85-0535	
Pressure Operated Control Head • Allows for pressure actuation of the cylinder. • See datasheet K-85-0510	
Electric Control Head • Allows for electric actuation of the cylinder from a system control panel. Also offers manual operation at the cylinder. • See datasheet K-81-8010	

Table 2: Control Heads

Electric and Cable Control Head • Allows for electric actuation of the cylinder from a system control panel or remote operation through a cable system. Also offers manual operation at the cylinder. • See datasheet K-81-8030	
Cable Operated Control Head • Allows remote operation of the cylinder through a cable system. Also offers manual operation at the cylinder. • See datasheets K-85-0509 and K-81-6021	
Pneumatic Control Head • Allows remote operation of the cylinder by means of pressure pulses transmitted from heat-actuated detectors (HADs) via copper tubing. Also offers manual operation at the cylinder. • See datasheet K-81-7010	

Check Valves

Check valves serve to isolate a specific section of the suppression system from the entire system. Check valves are used in all fire suppression systems that are equipped with a main and reserve set of CO_2 cylinders. The valves are installed in each discharge manifold to isolate the main and reserve cylinders from each other. Check valves are also used in systems incorporating directional valves where a common set of CO_2 cylinders to protect areas or equipment of unequal sizes. The check valves divide the cylinder group into subsets for discharge of the required amounts of CO_2 into the protected areas or equipment. Check valves are available in sizes ranging from 1/4 to 3 in. diameter. The 1/4-inch and 3/8-inch check valves are also used in Nitrogen or CO_2 pilot lines.

Figure 6. 1/4 in. Check Valve

For more information, see K-85-0520, K-85-0522, and K-81-5100.

Stop (Directional) Valves

Stop (Directional) valves allow cost-effective protection for facilities with several assets requiring protection. Stop valves find two primary applications in CO_2 systems. The first application is in multi-hazard systems which share a common CO_2 suppression system. Stop valves are used to route the CO_2 from the shared supply to the individual areas or equipment being protected.

The second application for these valves is as a life safety device to prevent the accidental discharge of CO_2 into a normally occupied area. The stop valve prevents the flow of CO_2 until the attached control head is operated.

All Kidde Fire Systems Stop valves operate on a differential-pressure principle, using the pressure of the discharging CO_2 to open the stop check and allow flow through the valve. All valves automatically reset (close) after discharge is completed.

Stop valves are available in sizes ranging from 1/2 to 4 in. diameter.

For more information, see K-81-5130.

Lockout Valves

A lockout valve is a manually operated valve installed between the CO_2 manifold and the discharge pipe to the protected area. The lockout valve can be locked in the closed position to prevent CO_2 from discharging into the protected area. The lockout valve shall be installed at the end of the CO_2 manifold or, if a common manifold protects multiple hazards, after each selector valve.

The lockout valve consists of a carbon steel or stainless steel valve with threaded ends. Either valve style can be provided with or without limit switches. Lockout valves are available in sizes ranging from 1/4 to 4 in. diameter.

Figure 7. Lockout Valves with Lock

The lockout valve without limit switches is available in sizes 1/4” through 2”. The lockout valve with 2 SPDT limit switches and indicator is available in sizes 1/4” through 2”. The lockout valve with 2 SPDT explosion proof limit switches and indicator is available in sizes 1/4” through 2”. For more information, see K-81-1300, K-81-1310, and K-81-1320.

Discharge Nozzles

Figure 8. $HPCO_2$ Nozzles (Type S, Type M, Type V with Flange, and Type L)

Discharge nozzles control the distribution of CO_2 into the protected area for total flooding or onto the protected equipment for local application. These discharge nozzles are designed to provide the proper combination of flow rate and discharge pattern to protect vital equipment. See Table 3 for more information on nozzle styles and applications.

Discharge nozzles are marked to identify the nozzle and show the nozzle's equivalent single orifice diameter. The equivalent diameter refers to the orifice diameter of a "standard" single orifice type nozzle having the same flow rate as the discharge nozzle.

Strainers are provided with nozzles having smaller orifice sizes to prevent foreign objects in the pipe from clogging the nozzle orifice.

A Flange Mounting kit is available for Type S Multijet and the Type V Vent nozzles.

Table 3. Nozzle Styles

Nozzle Type	Application	Nominal Spray Pattern
Multijet Type S	Total Flood -or- Local Application Rate by Volume	Cone
Multijet Type S, Flange		
Multijet Type S, Coated		
Multijet Type M		
Vent Type V	Total Flood	Jet
Multijet Type L	Local Application Rate by Area	180° Fan

Note: See flow calculation report for nozzle part numbers and drill codes.

Multijet Nozzle, Type S

The type S multijet nozzles have a female 1/2 in. NPT inlet connection for attaching to the distribution piping. The basic type S nozzle has a red painted cold-rolled steel body. A flanged type S nozzle and flanged mounting kit are also available for placing the nozzle on the exterior of a duct or enclosure. The flanged mounting kit includes a frangible disc which ruptures upon discharge. The flanged nozzle and mounting kit may be used to prevent particulate and liquid matter from clogging the orifices. The flanged nozzle body is painted red.

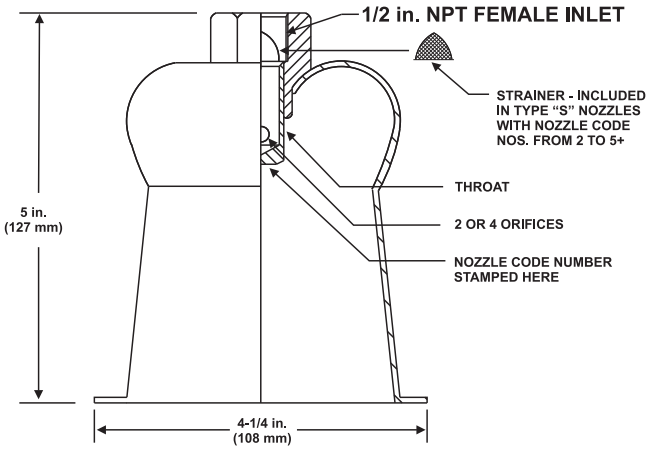

Figure 9. Multijet Nozzle, Type S Flanged

For more information, see K-81-1130 and K-81-1170.

Multijet Nozzle, Type M

The type M multijet nozzle is similar in design and operation to the type S multijet nozzle, and is used for applications requiring higher flow rates than those attainable with the type S nozzle. The nozzle body is longer than the type S body in order to accommodate the higher flow rates. The type M nozzle has a red painted, cold-rolled steel body and a 3/4 in. NPT inlet connection for attaching to the CO_2 distribution piping.

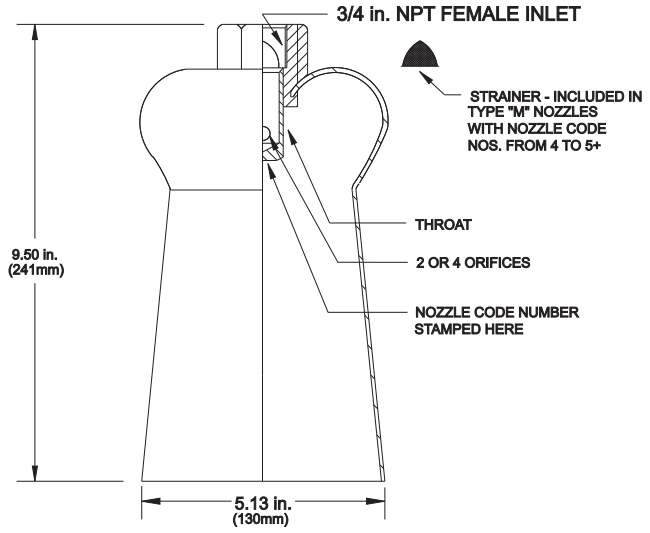

Figure 10. Multijet Nozzle, Type M

For more information, see K-81-1150 and K-81-1170.

Vent Nozzle, Type V

The type V vent nozzle is a single-orifice nozzle used to discharge a jet of CO_2 into an enclosure such as a duct. The type V nozzles are only used for total flooding applications.

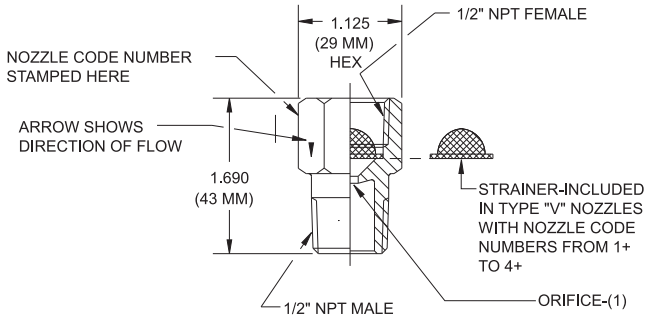

Figure 11. Vent Nozzle, Type V

For more information, see K-81-1110, K-81-1120, and K-81-1170.

Multijet Nozzle, Type L

The type L multijet nozzle has a 1/2-inch NPT female connection for attaching to the CO_2 distribution piping. The discharge produces a 180° flat fan pattern that is highly effective for protection of dip tanks, drain boards and similar two dimensional hazards. The nozzle is attached to the side of a tank and offers no obstruction to overhead trolleys or dipping operations.

The type L nozzles are only used for local application systems.

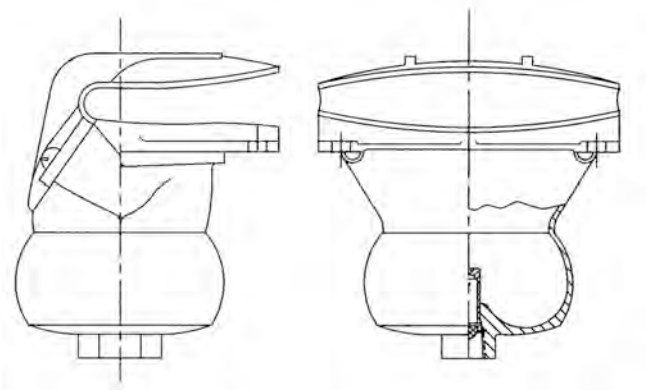

Figure 12. Multijet Nozzle, Type L

Hand Hose Line Systems

A Hand Hose Line System consists of a hose reel or rack, hose, and a discharge nozzle assembly connected by fixed piping to a supply of CO_2.

Hand hose line systems may be used to supplement fixed fire protection systems or to supplement first response portable fire extinguishers for the protection of specific hazards for which CO_2 is a suitable extinguishing agent. These systems shall not be used as a substitute for other fixed CO_2 fire-extinguishing systems equipped with fixed nozzles, except where the hazard cannot adequately or economically be protected by a fixed system. The decision as to whether hose lines are applicable to the particular hazard shall rest with the authority having jurisdiction.

Hand hose line systems shall be placed such that they are easily accessible and that the hose length is adequate to reach the most distant hazard. In general, they should not be located where they will be exposed to the hazard, nor shall they be located inside any hazard area protected by a total flooding system.

If multiple hose stations are used, they shall be spaced so that one or more hose lines can cover any area within the hazard.

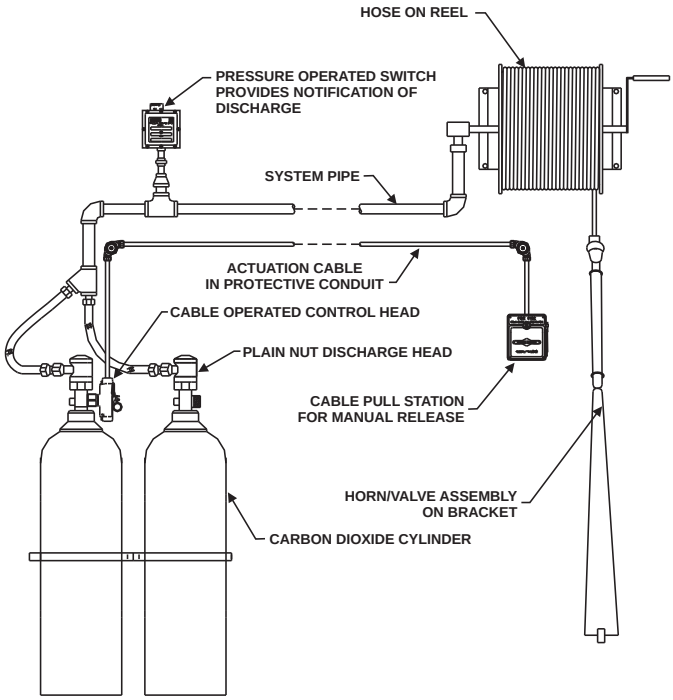

Figure 13. Typical Hand Hose Line System with Reel

PRESSURE OPERATED SIRENS

The Pressure Operated Sirens are used as audible alarms in and outside the hazard, warning those in the area to evacuate. These units discharges CO_2 when operated.

Note: When the CO_2 discharge occurs outside the hazard, the discharge does not contribute to a firefighting concentration and the total system agent quantity must be compensated to account for the CO_2 discharged by the siren.

Figure 14. Pressure Operated Siren

DISCHARGE DELAY DEVICES

Discharge delay devices are designed to delay the discharge of CO_2 for an appropriate period of time to allow for an orderly and safe evacuation from the protected area. Discharge delays also provide a time interval for equipment to shutdown and auxiliary interlocks to engage prior to the agent discharge. Discharge delays are used to control the length of the pre-discharge warning period by holding back the actuation of a stop valve which prevents flow of CO_2 into the hazard area. Discharge delays can use either the CO_2 agent or a Nitrogen pilot cylinder to operate.

Figure 15. Discharge Delay

For more information, see datasheets K-81-5210 and K-85-9130.

ODORIZER ASSEMBLY

CO_2 is odorless and colorless. Therefore for the safety of personnel who may occupy the hazard area, odorizer assemblies are required with each CO2 system regardless of size. Odorizers are used to inject wintergreen scent into the CO_2 discharge as a means to warn occupants of the presence of CO_2. Upon discharge, the CO_2 pressure ruptures a burst disc to release the scent intermixing it with the CO_2.

Figure 16. Odorizer

For more information, see datasheet K-81-9162.

DISCHARGE INDICATOR

The discharge indicator,installed on the system, gives clear visual indication of a system discharge.

Figure 17. Discharge Indicator

For more information, see datasheet K-85-0527.

SAFETY OUTLET

Use a safety outlet for pressure relief of manifold arrangements using directional valves

Figure 18. Safety Outlet

For more information, see datasheet K-81-5170.

DISCHARGE PRESSURE SWITCH

Provides a pressure operated electrical switch. Once operated by system pressure, the switch can be used to enunciate alarms, shut down ventilation and/or other electrical equipment and turn on electrical automatic dampers or other necessary equipment.

Figure 19. Discharge Pressure Switch

For more information, see datasheet K-81-5180.

PRESSURE TRIP

The pressure trip provides a pressure operated mechanical quick release to close dampers, shut spring loaded shutoff valves, and other similar applications

Figure 20. Pressure Trip

For more information, see datasheet K-81-5200.

WARNING SIGNS

Warning signs shall be posted inside and outside all areas protected by a CO_2 system, and in adjoining areas where the CO_2 could migrate. These warning signs instruct the occupants to evacuate the area immediately when the alarms operate, as well as to warn personnel not to enter the protected space after a CO_2 discharge until the area has been safely ventilated. Kidde Fire Systems offers different safety warning signs with wording specific to each application.

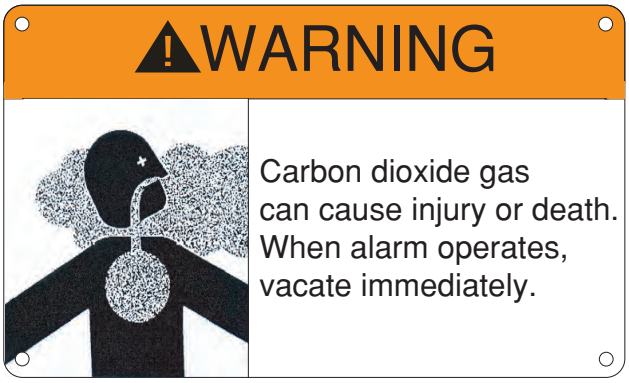

Figure 21. Sign in Every Protected Space

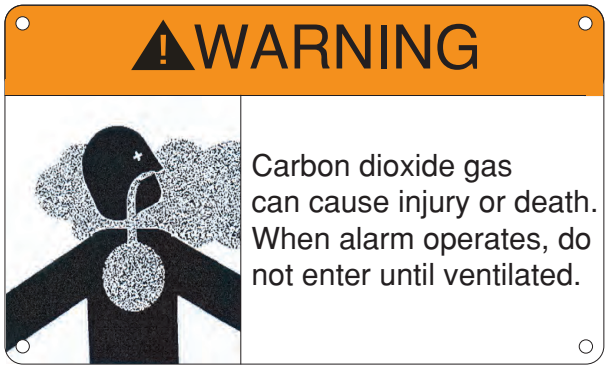

Figure 22. Sign at Every Entrance to Protected Space

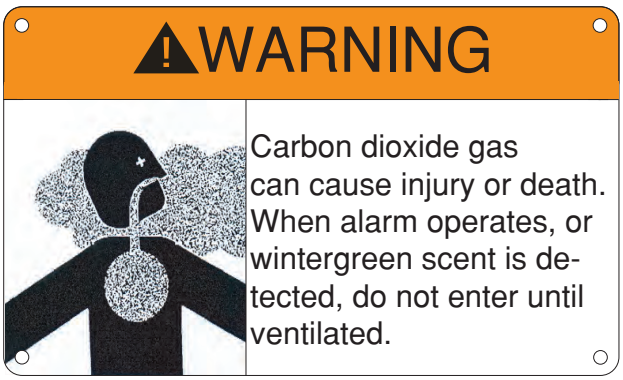

Figure 23. Sign at Every Entrance to Protected Space for Systems Provided with a Wintergreen Odorizer

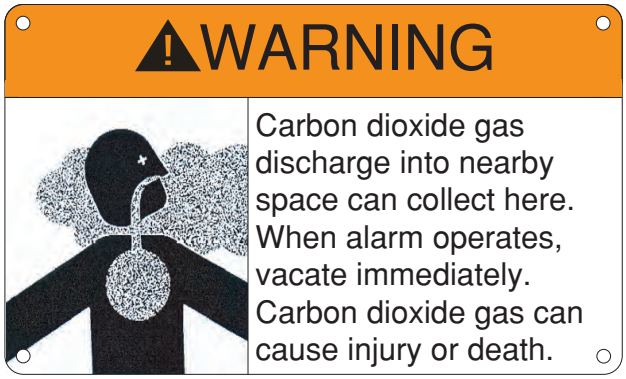

Figure 24. Sign in Every Nearby Space Where CO_2 Can Accumulate to Hazardous Levels

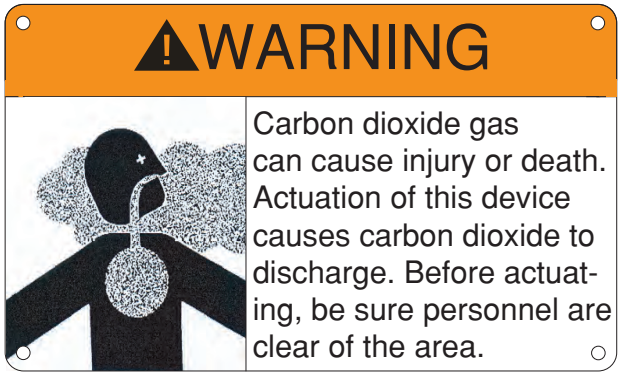

Figure 25. Sign at Each Manual Actuation Station

For more information, see datasheet K-81-9171.

POST DISCHARGE CLEANUP

CO2 can be lethal at certain concentrations. For the safety of the personnel after a discharge, ensure all air-exchanging equipment is turned back on and all areas to where the agent was discharged or where the discharged agent could migrate, should be thoroughly ventilated and purged with fresh air.

Kidde Fire Systems, Kidde Fire Protection and Fenwal Controls branded products are created exclusively by Kidde-Fenwal, LLC, 400 Main St, Ashland, MA 01721, USA
All trademarks are the property of their respective owners.

This literature is provided for informational purposes only. Kidde-Fenwal, LLC believes this data to be accurate, but it is published and presented without any guarantee or warranty whatsoever. Kidde-Fenwal, LLC assumes no responsibility for the product's suitability for a particular application. The fire suppression system design, installation, maintenance, service and troubleshooting must be performed by trained, authorized Kidde Fire Systems distributors for the product to work correctly. If you need more information on this product, or if you have a particular problem or question, contact: Kidde-Fenwal, LLC, Ashland, MA 01721 USA, Telephone: (508) 881-2000.

©2024 Kidde-Fenwal, LLC

EXPORT INFORMATION (USA)
Jurisdiction: EAR
Classification: EAR99
This document contains technical data subject to the EAR.

Kidde-Fenwal, LLC
400 Main Street
Ashland, MA 01721
Ph: 508.881.2000
Fax: 508.881.8920
kiddefiresystems.com

HPCO$_2$ Component Description

Type "I" Cylinder Valve, 5/8 in. With Typical Cylinder

P/N: WK-840253-000

Effective: January 2019
K-81-1050 Rev AF

FEATURES

- ***5/8-in diameter bore***
- ***1-in NGT external threads***
- ***0°F (-18°C) to 130°F (55°C) agency temperature range***
- ***Underwriters' Laboratories Listed - File Number EX923***
- ***Factory Mutual Approved - Standard 5420***

DESCRIPTION

Kidde Fire Systems' High-Pressure Carbon Dioxide (CO2) Fire Suppression Systems use a forged brass discharge valve to dispense CO2 from the 75-lbm or 100-lbm capacity cylinder assemblies. A US DOT compliant safety relief device, protecting the cylinder from over pressurization, is provided as part of the discharge valve assembly. A side port functions as a fill connection or as an attachment point for a compatible control head. Since the CO2 is stored under its own vapor pressure, a pressure gauge is not provided.

The discharge valve cannot dispense the cylinder contents without a properly attached discharge head. A discharge flex hose connects the discharge head to the system manifold. Alternatively, a swivel adapter may be used in place of a discharge flex hose to connect to the system manifold.

The discharge valve is provided as part of the HPCO2 cylinder assembly. A discharge head and flex hose need to be ordered for each cylinder assembly.

Figure 1. 5/8 in. Discharge Valve

ORDERING INFORMATION

Description	Part Number
Discharge Valve, 5/8 in.	WK-840253-000

REFERENCED COMPONENTS

Description	Reference Data Sheet
Cylinder & Valve Assembly, 75/100-lbm	K-81-1010
Discharge Head, Plain Nut	K-81-1060
Discharge Head, Groove Nut	K-81-1070
Discharge Hose, ¾" NPT	K-81-1090
Adapter, Swivel	K-81-1105

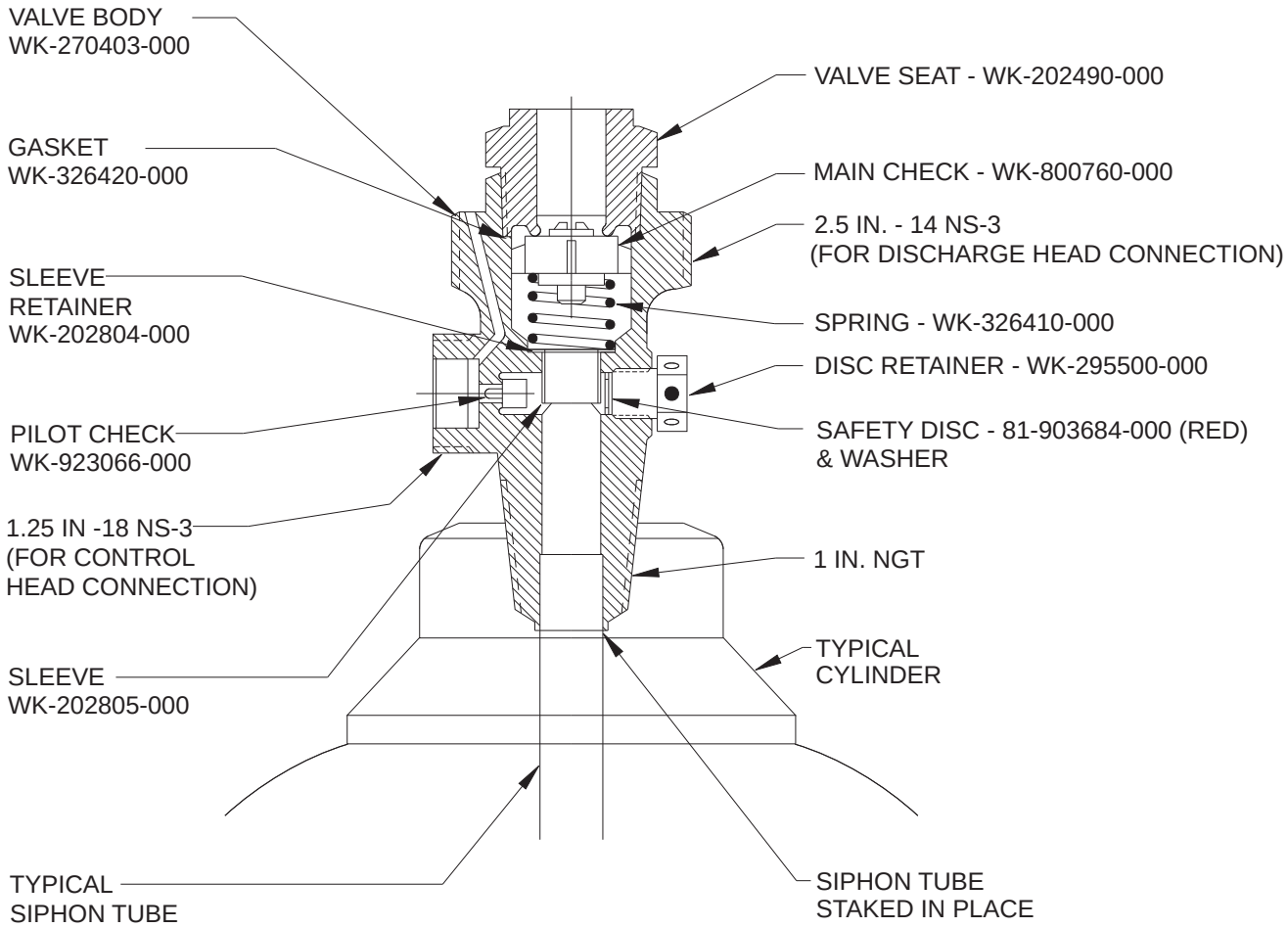

Figure 2. Discharge Valve Components

MATERIALS:

VALVE BODY:	**BRASS**
GASKET:	**COPPER**
VALVE SEAT:	**BRASS**
SLEEVE:	**BRASS**
SLEEVE RETAINER:	**BRASS**
MAIN CHECK:	**BRASS WITH RUBBER SEAT**
PILOT CHECK:	**STAINLESS STEEL WITH RUBBER SEAT**
DISC RETAINER:	**BRASS**

PRESSURE RATING:
WORKING = 2300 PSIG (158 BAR)
HYDROSTATIC = 6000 PSIG (413 BAR)

EXPORT INFORMATION (USA)
Jurisdiction: EAR
Classification: EAR99
This document contains technical data subject to the EAR.

KIDDE is a registered trademark of Kidde-Fenwal, Inc., or its parents, subsidiaries or affiliates.

This literature is provided for informational purposes only. KIDDE-FENWAL, INC. believes this data to be accurate, but it is published and presented without any guarantee or warranty whatsoever. KIDDE-FENWAL, INC. assumes no responsibility for the product's suitability for a particular application. Product features specified are only applicable when the fire suppression system is correctly designed, installed, maintained and serviced by trained, authorized Kidde Fire Systems distributors as per the applicable design, installation, operation, and maintenance manuals. If you need more information on this product, or if you have a particular problem or question, contact: KIDDE-FENWAL, INC., Ashland, MA 01721 USA, Telephone: (508) 881-2000.

Kidde Fire Systems
400 Main Street
Ashland, MA 01721
Ph: 508.881.2000
Fax: 508.881.8920
www.kiddefiresystems.com

©2019 Kidde-Fenwal, Inc.

CO_2 Component Description

Type "I" Cylinder Valve, 5/8-in. With Typical Cylinder

Kidde Fire Systems
A UTC Fire & Security Company

Effective: March 2011
K-81-1050

P/N: 840253

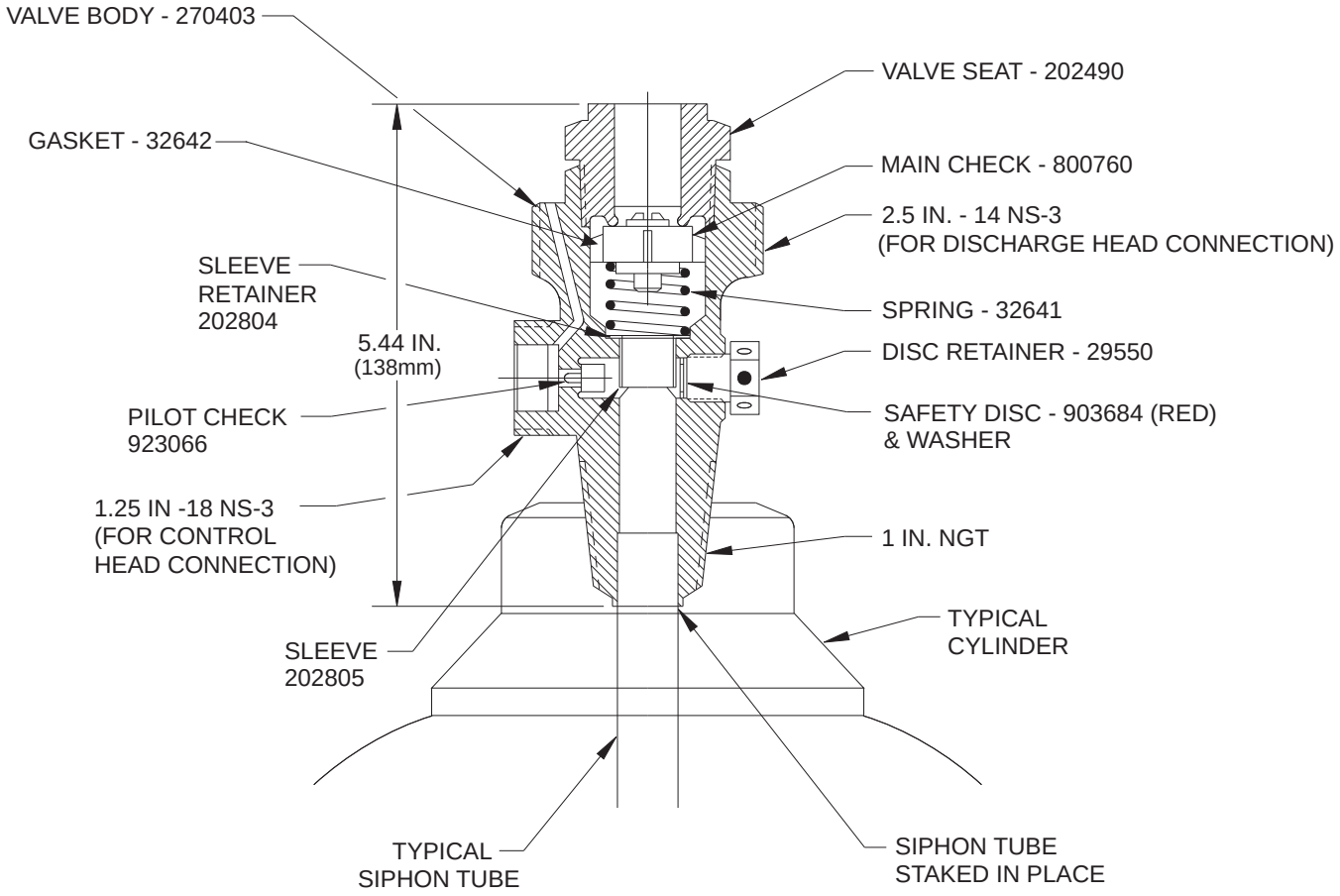

MATERIALS:

VALVE BODY:	**BRASS**
VALVE SEAT:	**BRASS**
SLEEVE:	**BRASS**
SLEEVE RETAINER:	**BRASS**
MAIN CHECK:	**BRASS WITH RUBBER SEAT**
PILOT CHECK:	**STAINLESS STEEL WITH RUBBER SEAT**

PRESSURE RATING:
WORKING = 2300 PSIG (158 BAR)
HYDROSTATIC = 6000 PSIG (413 BAR)

This literature is provided for informational purposes only. KIDDE-FENWAL, INC. assumes no responsibility for the product's suitability for a particular application. The product must be properly applied to work correctly.
If you need more information on this product, or if you have a particular problem or question, contact KIDDE-FENWAL, INC., Ashland, MA 01721. Telephone: (508) 881-2000.

Kidde Fire Systems
A UTC Fire & Security Company
400 Main Street
Ashland, MA 01721
Ph: 508.881.2000
Fax: 508.881.8920
www.kiddefiresystems.com

 © 2011 Kidde-Fenwal Inc. Printed in USA

HPCO$_2$ Component Description

75 and 100 lbm Capacity
Carbon Dioxide Cylinder and Valve Assemblies

Effective: June 2020
K-81-1010 Rev AE

FEATURES

- ***US DOT 3AA-2300 Specification***
- ***TC 3AM-176 Specification***
- ***Type I Valve, 5/8"***
- ***Straight Siphon Tube***
- ***Underwriters' Laboratories Listed - File Number EX923***
- ***United States Coast Guard Approved***
- ***FM Approved, Standard 5420***

DESCRIPTION

The Kidde Fire Systems High-Pressure Carbon Dioxide (CO2) Fire Suppression System uses seamless steel cylinders to store carbon dioxide agent. The agent is stored under its own vapor pressure as a non-flammable compressed gas. Due to the physical properties of CO_2, both the vapor and liquid state are present within the cylinder. Each assembly is factory fitted with a discharge valve and siphon tube. A US DOT compliant safety relief device, protecting the cylinder from over pressurization, is provided as part of the discharge valve assembly. For shipment, a standard shipping cap is included, which mates to external threads on the cylinder neck to protect the discharge valve from inadvertent damage.

Prior to removing the shipping cap, each cylinder shall be properly secured using cylinder straps or Framing/Oak Rack Kits as required.

The discharge valve cannot dispense the cylinder contents without a properly attached discharge head. This feature provides an enhanced safeguard during transport. A discharge flex hose connects the discharge head to the system manifold. Alternatively, a swivel adapter may be used in place of a discharge flex hose to connect to the system manifold. One or more control heads will be required to actuate a manifold of cylinders.

After discharge, charging accessories are required to safely vent any residual pressure to service the discharge valve and then re-fill the cylinder.

SPECIFICATIONS

Service Pressure, Max:	2300-psi (158-bar)
Temperature, Min:	0°F (-17°C)
Temperature, Max:	130°F (55°C)

DIMENSIONS

Cylinder Capacity (lbm)	A Height (in.)	B Dia. (in.)
100	62.0”	10.50
75	60.0	9.25

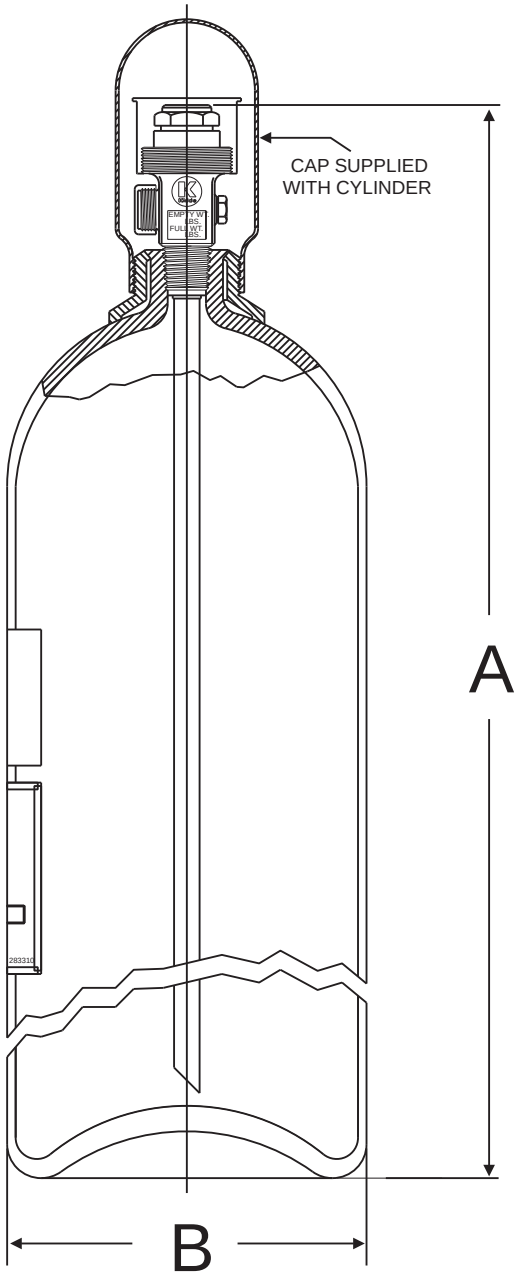

Figure 1. Cylinder

ORDERING INFORMATION

Description	Application	Approvals	Part Number
Cylinder & Valve Assembly, 100-lbm	Industrial and Marine	UL/ULC FM Approvals USCG Various Class Societies	81-870269-000
Cylinder & Valve Assembly, 75-lbm			81-870287-000

REFERENCED COMPONENTS

Description	Reference Data Sheet
Discharge Head, Plain Nut	K-81-1060
Discharge Head, Grooved Nut	K-81-1070
Hose, ¾” Outlet Discharge	K-81-1090
Adapter, Swivel	K-81-1105
Strap, Single Cylinder	K-81-1230
Strap, Dual Cylinder	K-81-1240
Framing Kit, Steel	See manual 81-CO2MAN-001
Rack Kit, Oak	See manual 220610
Control Head, Electric	K-81-8010*
Control Head, Cable Operated	K-81-6020*
Valve, 5/8” Type I (spare only)	K-81-1050
Fixture, Blow-Off	K-81-9110
Adapter, Charging	
* Typical listed, see referenced manuals for all applicable control heads.	

EXPORT INFORMATION (USA)
Jurisdiction: EAR
Classification: EAR99
This document contains technical data subject to the EAR.

All trademarks are the property of their respective owners.

This literature is provided for informational purposes only. KIDDE-FENWAL, INC. believes this data to be accurate, but it is published and presented without any guarantee or warranty whatsoever. KIDDE-FENWAL, INC. assumes no responsibility for the product's suitability for a particular application. The fire suppression system design, installation, maintenance, service and troubleshooting must be performed by trained, authorized Kidde Fire Systems distributors for the product to work correctly.
If you need more information on this product, or if you have a particular problem or question, contact:
KIDDE-FENWAL, INC., Ashland, MA 01721 USA, Telephone: (508) 881-2000.

Kidde Fire Systems
400 Main Street
Ashland, MA 01721
Ph: 508.881.2000
Fax: 508.881.8920
kiddefiresystems.com

©2020 Carrier

Continuation of Supplies or Services and Prices/Costs

Additional Information/Notes

Item	Supplies/Service	Quantity	Unit	Unit Price	Amount
0001	The contractor shall provide all personnel equipment, supplies, facilities, tools, materials, supervision, and other items and non-personal services necessary to provide inspection and recertification services for high-carbon dioxide cylinders used in a fire suppression system at Albeni Falls Dam (AFD). Contractor is to provide all parts, labor, materials, personnel, transportation (pickup from and delivery to AFD), perform hydrostatic testing, and refilling of the CO2 cylinders as described in the Scope of Work (SOW). Pricing Arrangement: Firm Fixed Price	1	Job		
Option Line Item 0002	Rebuilding of Kiddie Type "I" Valves. Quote parts (rebuild kit) and labor for one (1) valve rebuild. Pricing Arrangement: Firm Fixed Price	1	Job		
Option Line Item 0003	Replacement of Kiddie Type "I" Valve. Quote price for one (1) new complete valve. Pricing Arrangement: Firm Fixed Price	1	Each		
Option Line Item 0004	Replacement of 75-Pound Cylinder Assembly. Quote price for one (1) new complete cylinder with valve. Pricing Arrangement: Firm Fixed Price	1	Each		
Option Line		1	Each		

Item 0005	Replacement of 75-Pound Cylinder. Quote price for one (1) new cylinder (cylinder, no valve). Pricing Arrangement: Firm Fixed Price				
Option Line Item 0006	Documentation and Recertification of Cylinders & Valves. Quote price for complete documentation of work performed. The recertification record(s) shall identify each cylinder assembly, describe the work performed on each cylinder, and state that cylinder and valve are serviceable. It is permissible for Contractor to submit one record for each cylinder and valve, or to submit one document that contains the individual recertification information for the full lot of cylinders and valves. Pricing Arrangement: Firm Fixed Price	1	Job		

Continuation of Description

Requirements

This is a non-personal services contract to perform hydrostatic testing of the Carbon Dioxide (CO2) Compressed Gas Cylinders that are part of the CO2 Fire Suppression System at Albeni Dam. The Government shall not exercise any supervision of control over the contract service providers performing the services herein. Such contract service providers shall be accountable solely to the Contractor who, in turn, is responsible to the Government.

0001
Product Service Code : S202

Continuation of Inspection and Acceptance

Overall Contract Inspection/Acceptance Locations

0001	Inspection and Acceptance Location Both Other Instructions: Please follow information provided in attached Scope of Work. DoDAAC: 960513 CountryCode: USA ARMY CORPS OF ENGINEERS CIVIL WORKS SEATTLE DIST 2376 E HIGHWAY 2, PROJECT ENGINEER ALBENI FALLS DAM OLDTOWN, ID 83822-9243 UNITED STATES Jeff Smutny
Option Line Item 0002	Inspection and Acceptance Location Both Other Instructions: Please follow information provided in attached Scope of Work. DoDAAC: 960513 CountryCode: USA ARMY CORPS OF ENGINEERS CIVIL WORKS SEATTLE DIST 2376 E HIGHWAY 2, PROJECT ENGINEER ALBENI FALLS DAM OLDTOWN, ID 83822-9243 UNITED STATES Jeff Smutny
Option Line Item 0003	Inspection and Acceptance Location Both Other Instructions: Please follow information provided in attached Scope of Work.

	DoDAAC: 960513 CountryCode: USA ARMY CORPS OF ENGINEERS CIVIL WORKS SEATTLE DIST 2376 E HIGHWAY 2, PROJECT ENGINEER ALBENI FALLS DAM OLDTOWN, ID 83822-9243 UNITED STATES Jeff Smutny
Option Line Item 0004	Inspection and Acceptance Location Both Other Instructions: Please follow information provided in attached Scope of Work. DoDAAC: 960513 CountryCode: USA ARMY CORPS OF ENGINEERS CIVIL WORKS SEATTLE DIST 2376 E HIGHWAY 2, PROJECT ENGINEER ALBENI FALLS DAM OLDTOWN, ID 83822-9243 UNITED STATES Jeff Smutny
Option Line Item 0005	Inspection and Acceptance Location Both Other Instructions: Please follow information provided in attached Scope of Work. DoDAAC: 960513 CountryCode: USA ARMY CORPS OF ENGINEERS CIVIL WORKS SEATTLE DIST 2376 E HIGHWAY 2, PROJECT ENGINEER ALBENI FALLS DAM OLDTOWN, ID 83822-9243 UNITED STATES Jeff Smutny

Option Line Item 0006	Inspection and Acceptance Location Both Other Instructions: Please follow information provided in attached Scope of Work. DoDAAC: 960513 CountryCode: USA ARMY CORPS OF ENGINEERS CIVIL WORKS SEATTLE DIST 2376 E HIGHWAY 2, PROJECT ENGINEER ALBENI FALLS DAM OLDTOWN, ID 83822-9243 UNITED STATES Jeff Smutny

Continuation of Deliveries or Performance

0001	**Delivery Schedule** Delivery Requested By Delivery Date 30 Jun 2026 **Quantity** 1 Job **Address and POC** Place of Performance DoDAAC: 960513 CountryCode: USA ARMY CORPS OF ENGINEERS CIVIL WORKS SEATTLE DIST 2376 E HIGHWAY 2, PROJECT ENGINEER ALBENI FALLS DAM OLDTOWN, ID 83822-9243 UNITED STATES Christine M. KImel, DELIVER_TO_EMP_ID_NO **Period of Performance** From 27 Apr 2026 To 30 Jun 2026
Option Line Item 0002	**Delivery Schedule** Delivery Requested By Delivery Date 30 Jun 2026 **Quantity** 1 Job **Address and POC** Place of Performance DoDAAC: 960513 CountryCode: USA ARMY CORPS OF ENGINEERS CIVIL WORKS SEATTLE DIST 2376 E HIGHWAY 2, PROJECT ENGINEER ALBENI FALLS DAM OLDTOWN, ID 83822-9243 UNITED STATES Christine M. KImel, DELIVER_TO_EMP_ID_NO

	Period of Performance From 27 Apr 2026 To 30 Jun 2026
Option Line Item 0003	**Delivery Schedule** Delivery Requested By Delivery Date 30 Jun 2026 **Quantity** 1 Each **Address and POC** Place of Performance DoDAAC: 960513 CountryCode: USA ARMY CORPS OF ENGINEERS CIVIL WORKS SEATTLE DIST 2376 E HIGHWAY 2, PROJECT ENGINEER ALBENI FALLS DAM OLDTOWN, ID 83822-9243 UNITED STATES Christine M. KImel, DELIVER_TO_EMP_ID_NO **Period of Performance** From 27 Apr 2026 To 30 Jun 2026
Option Line Item 0004	**Delivery Schedule** Delivery Requested By Delivery Date 30 Jun 2026 **Quantity** 1 Each **Address and POC** Place of Performance

	DoDAAC: 960513 CountryCode: USA ARMY CORPS OF ENGINEERS CIVIL WORKS SEATTLE DIST 2376 E HIGHWAY 2, PROJECT ENGINEER ALBENI FALLS DAM OLDTOWN, ID 83822-9243 UNITED STATES Christine M. KImel, DELIVER_TO_EMP_ID_NO **Period of Performance** From 27 Apr 2026 To 30 Jun 2026
Option Line Item 0005	**Delivery Schedule** Delivery Requested By Delivery Date 30 Mar 2026 **Quantity** 1 Each **Address and POC** Place of Performance DoDAAC: 960513 CountryCode: USA ARMY CORPS OF ENGINEERS CIVIL WORKS SEATTLE DIST 2376 E HIGHWAY 2, PROJECT ENGINEER ALBENI FALLS DAM OLDTOWN, ID 83822-9243 UNITED STATES Christine M. KImel, DELIVER_TO_EMP_ID_NO **Period of Performance** From 27 Apr 2026 To 30 Jun 2026

Option Line Item 0006	**Delivery Schedule** Delivery Requested By Delivery Date 30 Jun 2026 **Quantity** 1 Job **Address and POC** Place of Performance DoDAAC: 960513 CountryCode: USA ARMY CORPS OF ENGINEERS CIVIL WORKS SEATTLE DIST 2376 E HIGHWAY 2, PROJECT ENGINEER ALBENI FALLS DAM OLDTOWN, ID 83822-9243 UNITED STATES Christine M. KImel, DELIVER_TO_EMP_ID_NO **Period of Performance** From 27 Apr 2026 To 30 Jun 2026

Contract Clauses

FAR Clauses Incorporated by Reference

Number	Title	Effective Date	Alternate Deviation	Variation Effective Date
52.203-19	Prohibition on Requiring Certain Internal Confidentiality Agreements or Statements.	2017-01		
52.204-13	System for Award Management-Maintenance. (Deviation)	2026-02		
52.209-6	Protecting the Government's Interest When Subcontracting With Contractors Debarred, Suspended, Proposed for Debarment, or Voluntarily Excluded. (Deviation)	2026-02		
52.212-4	Terms and Conditions-Commercial Products and Commercial Services. (Deviation)	2026-02		
52.219-6	Notice of Total Small Business Set-Aside. (Deviation)	2026-02		
52.222-19	Child Labor-Cooperation with Authorities and Remedies. (Deviation)	2026-02		
52.222-36	Equal Opportunity for Workers with Disabilities. (Deviation)	2026-02		
52.222-50	Combating Trafficking in Persons. (Deviation)	2026-02		
52.226-8	Encouraging Contractor Policies	2024-05		

	to Ban Text Messaging While Driving.	
52.229-12	Tax on Certain Foreign Procurements.	2021-02
52.232-33	Payment by Electronic Funds Transfer-System for Award Management.	2018-10
52.232-40	Providing Accelerated Payments to Small Business Subcontractors.	2023-03
52.233-3	Protest after Award. (Deviation)	2026-02
52.233-4	Applicable Law for Breach of Contract Claim. (Deviation)	2026-02

DFARS Clauses Incorporated by Reference

Number	Title	Effective Date	Alternate Deviation	Variation Effective Date
252.203-7000	Requirements Relating to Compensation of Former DoD Officials.	2011-09		
252.203-7002	Requirement to Inform Employees of Whistleblower Rights.	2022-12		
252.204-7012	Safeguarding Covered Defense Information and Cyber Incident Reporting.	2024-05		
252.204-7018	Prohibition on the Acquisition of	2023-01		

	Covered Defense Telecommunications Equipment or Services.	
252.225-7056	Prohibition Regarding Business Operations with the Maduro Regime.	2023-01
252.232-7003	Electronic Submission of Payment Requests and Receiving Reports.	2018-12
252.232-7010	Levies on Contract Payments.	2006-12
252.247-7023	Transportation of Supplies by Sea.	2024-10

DFARS Clauses Incorporated by Full Text

Number	Title	Effective Date	Alternate Deviation	Variation Effective Date
252.204-7021	Contractor Compliance with the Cybersecurity Maturity Model Certification Level Requirements.	2025-11		

CONTRACTOR COMPLIANCE WITH THE CYBERSECURITY MATURITY MODEL CERTIFICATION LEVEL REQUIREMENTS (NOV 2025)

(a) *Definitions*. As used in this clause-

"Controlled unclassified information" means information the Government creates or possesses, or information an entity creates or possesses for or on behalf of the Government, that a law, regulation, or Governmentwide policy requires or permits an agency to handle using safeguarding or dissemination controls (32 CFR 2002.4(h)).

"Current" means-

(1) With regard to Conditional Cybersecurity Maturity Model Certification (CMMC) Status-

(i) Not older than 180 days for Conditional Level 2 (Self) assessments and Conditional Level 2 (certified third-party assessment organization (C3PAO)) assessments, with-

(A) No changes in compliance with the requirements at 32 CFR part 170 since the Conditional CMMC Status date (see 32 CFR 170.16 and 170.17); and

(B) A corresponding affirmation of continuous compliance by an affirming official (see 32 CFR 170.4); and

(ii) Not older than 180 days for Conditional Level 3 (Defense Industrial Base Cybersecurity Assessment Center (DIBCAC)) assessments, with-

(A) No changes in compliance with the requirements at 32 CFR part 170 since the Conditional CMMC Status date (see 32 CFR 170.18); and

(B) A corresponding affirmation of continuous compliance by an affirming official;

(2) With regard to Final CMMC Status-

(i) Not older than 1 year for Final Level 1 (Self), with-

(A) No changes in compliance with the requirements at 32 CFR part 170 since the Final CMMC Status date (see 32 CFR 170.15); and

(B) A corresponding affirmation of continuous compliance, not older than 1 year, by an affirming official;

(ii) Not older than 3 years for Final Level 2 (Self) assessments and Final Level 2 (C3PAO) assessments, with-

(A) No changes in compliance with the requirements at 32 CFR part 170 since the Final CMMC Status date (see 32 CFR 170.16 and 170.17); and

(B) A corresponding affirmation of continuous compliance, not older than 1 year, by an affirming official; and

(iii) Not older than 3 years for Final Level 3 (DIBCAC) assessments, with-

(A) No changes in compliance with the requirements at 32 CFR part 170 since the Final CMMC Status date (see 32 CFR 170.18); and

(B) A corresponding affirmation of continuous compliance, not older than 1 year, by an affirming official; and

(3) With regard to affirmation of continuous compliance (32 CFR 170.22), not older than 1 year with no changes in compliance with the requirements at 32 CFR part 170.

"Cybersecurity Maturity Model Certification (CMMC) status" means the result of meeting or exceeding the minimum required score for the corresponding assessment. The potential statuses are as follows:

(1) Final Level 1 (Self).

(2) Conditional Level 2 (Self).

(3) Final Level 2 (Self).

(4) Conditional Level 2 (C3PAO).

(5) Final Level 2 (C3PAO).

(6) Conditional Level 3 (DIBCAC).

(7) Final Level 3 (DIBCAC).

"Cybersecurity Maturity Model Certification unique identifier (CMMC UID)" means 10 alpha-numeric characters assigned to each CMMC assessment and reflected in the Supplier Performance Risk System (SPRS) for each contractor information system.

"Federal contract information (FCI)" means information, not intended for public release, that is provided by or generated for the Government under a contract to develop or deliver a product or service to the Government. It does not include information provided by the Government to the public, such as on public websites, or simple transactional information, such as information necessary to process payments.

"Plan of action and milestones" means a document that identifies tasks to be accomplished. It details resources required to accomplish the elements of the plan, any milestones in meeting the tasks, and scheduled completion dates for the milestones, as defined in National Institute of Standards and Technology Special Publication 800-115 (32 CFR 170.21).

(b) *Framework*. The Cybersecurity Maturity Model Certification (CMMC) is a framework for assessing a contractor's compliance with applicable information security protections (see 32 CFR part 170).

(c) *Duplication*. The CMMC assessments will not duplicate efforts from any other comparable DoD assessment, except for rare circumstances when a reassessment may be necessary, for example, when there are indications of issues with cybersecurity and/or compliance with CMMC requirements.

(d) *Requirements*. The Contractor shall-

(1)(i) Have and maintain for the duration of the contract a current CMMC status at the following CMMC level, or higher: CMMC Level 1 (Self) for all information systems used in performance of the contract, task order, or delivery order that process, store, or transmit FCI or CUI; and

(ii) Consult 32 CFR 170.23 related to the flowdown of the CMMC requirements, and flow down the correct CMMC level to subcontracts and other contractual instruments;

(2) Only process, store, or transmit FCI or CUI on contractor information systems that have a CMMC status at the CMMC level required in paragraph (d)(1) of this clause, or higher;

(3) Complete on an annual basis, and maintain as current, an affirmation, by the affirming official (see 32 CFR 170.4), of continuous compliance with the requirements associated with the CMMC level required in paragraph (d)(1) of this clause in the Supplier Performance Risk System (SPRS) (*https://piee.eb.mil*) for each CMMC UID applicable to each of the contractor information systems that process, store, or transmit FCI or CUI and that are used in performance of the contract;

(4) Ensure all subcontractors and suppliers complete prior to subcontract award, and maintain on an annual basis, an affirmation, by the affirming official (see 32 CFR 170.4), of continuous compliance with the requirements associated with the CMMC level required for the subcontract or other contractual instrument for each of the subcontractor information systems that process, store, or transmit FCI or CUI and that are used in performance of the subcontract; and

(5) If the Contractor has a CMMC Status of Conditional, successfully close out a valid plan of action and milestones (32 CFR 170.21) to achieve a CMMC Status of Final.

(e) *Reporting*. The Contractor shall-

(1) Submit to the Contracting Officer-

(i) The CMMC UID(s) issued by SPRS for contractor information systems that will process, store, or transmit FCI or CUI during performance of the contract; and

(ii) Any changes in the CMMC UIDs generated in SPRS throughout the life of the contract, task order, or delivery order, if applicable;

(2) Enter into SPRS the results of a current self-assessment for each CMMC UID, not covered by a C3PAO assessment or DIBCAC assessment, applicable to each of the contractor information systems that process, store, or transmit FCI or CUI and that are used in performance of the contract; and

(3) Complete in SPRS on an annual basis and maintain as current an affirmation of continuous compliance by the affirming official (see 32 CFR 170.4) for each self-assessment, C3PAO assessment, or DIBCAC assessment required under the contract in SPRS.

(f) *Subcontracts*. The Contractor shall-

(1) Insert the substance of this clause, including this paragraph (f) and excluding paragraph (e)(1), in subcontracts and other contractual instruments, including those for the acquisition of commercial products or commercial services, excluding commercially available off-the-shelf items, if the subcontract or other contractual instrument will contain a requirement to process, store, or transmit FCI or CUI; and

(2) Prior to awarding a subcontract or other contractual instrument, ensure that the subcontractor has a current CMMC certificate or current CMMC status at the CMMC level that is appropriate for the information that is being flowed down to the subcontractor based on the requirements at 32 CFR 170.23.

(End of clause)

252.232-7006	Wide Area WorkFlow Payment Instructions.	2023-01

WIDE AREA WORKFLOW PAYMENT INSTRUCTIONS (JAN 2023)

(a) Definitions. As used in this clause-

"Department of Defense Activity Address Code (DoDAAC)" is a six position code that uniquely identifies a unit, activity, or organization.

"Document type" means the type of payment request or receiving report available for creation in Wide Area WorkFlow (WAWF).

"Local processing office (LPO)" is the office responsible for payment certification when payment certification is done external to the entitlement system.

"Payment request" and "receiving report" are defined in the clause at 252.232-7003, Electronic Submission of Payment Requests and Receiving Reports.

(b) Electronic invoicing. The WAWF system provides the method to electronically process vendor payment requests and receiving reports, as authorized by Defense Federal Acquisition Regulation Supplement (DFARS) 252.232-7003, Electronic Submission of Payment Requests and Receiving Reports.

(c) WAWF access. To access WAWF, the Contractor shall-

(1) Have a designated electronic business point of contact in the System for Award Management at https://www.sam.gov; and

(2) Be registered to use WAWF at https://wawf.eb.mil/ following the step-by-step procedures for self-registration available at this web site.

(d) WAWF training. The Contractor should follow the training instructions of the WAWF Web-Based Training Course and use the Practice Training Site before submitting payment requests through WAWF. Both can be accessed by selecting the "Web Based Training" link on the WAWF home page at https://wawf.eb.mil/

(e) WAWF methods of document submission. Document submissions may be via web entry, Electronic Data Interchange, or File Transfer Protocol.

(f) WAWF payment instructions. The Contractor shall use the following information when submitting payment requests and receiving reports in WAWF for this contract or task or delivery order:

(1) Document type. The Contractor shall submit payment requests using the following document type(s):

(i) For cost-type line items, including labor-hour or time-and-materials, submit a cost voucher.

(ii) For fixed price line items-

(A) That require shipment of a deliverable, submit the invoice and receiving report specified by the Contracting Officer.

____

(Contracting Officer: Insert applicable invoice and receiving report document type(s) for fixed price line items that require shipment of a deliverable.)

(B) For services that do not require shipment of a deliverable, submit either the Invoice 2in1, which meets the requirements for the invoice and receiving report, or the applicable invoice and receiving report, as specified by the Contracting Officer.

2 in 1 Combo

(Contracting Officer: Insert either "Invoice 2in1" or the applicable invoice and receiving report document type(s) for fixed price line items for services.)

(iii) For customary progress payments based on costs incurred, submit a progress payment request.

(iv) For performance based payments, submit a performance based payment request.

(v) For commercial financing, submit a commercial financing request.

(2)) Fast Pay requests are only permitted when Federal Acquisition Regulation (FAR) 52.213-1 is included in the contract.

[Note: The Contractor may use a WAWF "combo" document type to create some combinations of invoice and receiving report in one step.]

(3) Document routing. The Contractor shall use the information in the Routing Data Table below only to fill in applicable fields in WAWF when creating payment requests and receiving reports in the system.

Routing Data Table*

Field Name in WAWF	Data to be entered in WAWF
Pay Official DoDAAC	W916TX
Issue By DoDAAC	W912DW
Admin DoDAAC	960513
Inspect By DoDAAC	960513
Ship To Code	____
Ship From Code	____
Mark For Code	____
Service Approver (DoDAAC)	____
Service Acceptor (DoDAAC)	____
Accept at Other DoDAAC	____
LPO DoDAAC	____
DCAA Auditor DoDAAC	____
Other DoDAAC(s)	____

(*Contracting Officer: Insert applicable DoDAAC information. If multiple ship to/acceptance locations apply, insert "See Schedule" or "Not applicable.")

(**Contracting Officer: If the contract provides for progress payments or performance-based payments, insert the DoDAAC for the contract administration office assigned the functions under FAR 42.302(a)(13).)

(4) Payment request. The Contractor shall ensure a payment request includes documentation appropriate to the type of payment request in accordance with the payment clause, contract financing clause, or Federal Acquisition Regulation 52.216-7, Allowable Cost and Payment, as applicable.

(5) Receiving report. The Contractor shall ensure a receiving report meets the requirements of DFARS Appendix F.

(g) WAWF point of contact.

(1) The Contractor may obtain clarification regarding invoicing in WAWF from the following contracting activity's WAWF point of contact.

____

(Contracting Officer: Insert applicable information or "Not applicable.")

(2) Contact the WAWF helpdesk at 866-618-5988, if assistance is needed.

(End of clause)

Contract Terms and Conditions Required To Implement Statutes or Executive Orders — Commercial Products and Commercial Services

FAR Clauses Incorporated by Full Text

Number	Title	Effective Date	Alternate Deviation	Variation Effective Date
52.212-5	Contract Terms and Conditions Required to Implement Statutes or Executive Orders - Commercial Products and Commercial Services. (DEVIATION 2025-O0003 and 2025-O0004)	2025-03	Deviation 2025-O0004	2025-03

Contract Terms and Conditions Required To Implement Statutes or Executive Orders-Commercial Products and Commercial Services (MAR 2025) (DEVIATION 2025-O0003 and 2025-O0004)

(a) The Contractor shall comply with the following Federal Acquisition Regulation (FAR) clauses, which are incorporated in this contract by reference, to implement provisions of law or Executive orders applicable to acquisitions of commercial products and commercial services:

(1) 52.203-19, Prohibition on Requiring Certain Internal Confidentiality Agreements or Statements (Jan 2017) (section 743 of Division E, Title VII, of the Consolidated and Further Continuing Appropriations Act, 2015 (Pub. L. 113-235) and its successor provisions in subsequent appropriations acts (and as extended in continuing resolutions)).

(2) 52.204-23, Prohibition on Contracting for Hardware, Software, and Services Developed or Provided by Kaspersky Lab Covered Entities (Dec 2023) (Section 1634 of Pub. L. 115-91).

(3) 52.204-25, Prohibition on Contracting for Certain Telecommunications and Video Surveillance Services or Equipment. (Nov 2021) (Section 889(a)(1)(A) of Pub. L. 115-232).

(4) 52.209-10, Prohibition on Contracting with Inverted Domestic Corporations (Nov 2015).

(5) 52.232-40, Providing Accelerated Payments to Small Business Subcontractors (Mar 2023) (31 U.S.C. 3903 and 10 U.S.C. 3801).

(6) 52.233-3, Protest After Award (Aug 1996) (31 U.S.C. 3553).

(7) 52.233-4, Applicable Law for Breach of Contract Claim (Oct 2004) (Public Laws 108-77 and 108-78 (19 U.S.C. 3805 note)).

(b) The Contractor shall comply with the FAR clauses in this paragraph (b) that the Contracting Officer has indicated as being incorporated in this contract by reference to implement provisions of law or Executive orders applicable to acquisitions of commercial products and commercial services:

[Contracting Officer check as appropriate.]

[ ] (1) 52.203-6, Restrictions on Subcontractor Sales to the Government (Jun 2020), with Alternate I (Nov 2021) (41 U.S.C. 4704 and 10 U.S.C. 4655).

[ ] (2) 52.203-13, Contractor Code of Business Ethics and Conduct (Nov 2021) (41 U.S.C. 3509)).

[ ] (3) 52.203-15, Whistleblower Protections under the American Recovery and Reinvestment Act of 2009 (Jun 2010) (Section 1553 of Pub. L. 111-5). (Applies to contracts funded by the American Recovery and Reinvestment Act of 2009.)

[ ] (4) 52.203-17, Contractor Employee Whistleblower Rights (Nov 2023) (41 U.S.C. 4712); this clause does not apply to contracts of DoD, NASA, the Coast Guard, or applicable elements of the intelligence community-see FAR 3.900(a).

[ ] (5) 52.204-10, Reporting Executive Compensation and First-Tier Subcontract Awards (Jun 2020) (Pub. L. 109-282) (31 U.S.C. 6101 note).

[ ] (6) [Reserved].

[ ] (7) 52.204-14, Service Contract Reporting Requirements (Oct 2016) (Pub. L. 111-117, section 743 of Div. C).

[ ] (8) 52.204-15, Service Contract Reporting Requirements for Indefinite-Delivery Contracts (Oct 2016) (Pub. L. 111-117, section 743 of Div. C).

[ ] (9) 52.204-27, Prohibition on a ByteDance Covered Application (Jun 2023) (Section 102 of Division R of Pub. L. 117-328).

[ ] (10) 52.204-28, Federal Acquisition Supply Chain Security Act Orders-Federal Supply Schedules, Governmentwide Acquisition Contracts, and Multi-Agency Contracts. (Dec 2023) (Pub. L. 115-390, title II).

[ ] (11)

(i) 52.204-30, Federal Acquisition Supply Chain Security Act Orders-Prohibition. (Dec 2023) (Pub. L. 115-390, title II).

[ ] (ii) Alternate I (Dec 2023) of 52.204-30.

[ ] (12) 52.209-6, Protecting the Government's Interest When Subcontracting With Contractors Debarred, Suspended, Proposed for Debarment, or Voluntarily Excluded. (Jan 2025) (31 U.S.C. 6101 note).

[ ] (13) 52.209-9, Updates of Publicly Available Information Regarding Responsibility Matters (Oct 2018) (41 U.S.C. 2313).

[ ] (14) [Reserved].

[ ] (15) 52.219-3, Notice of HUBZone Set-Aside or Sole-Source Award (Oct 2022) (15 U.S.C. 657a).

[ ] (16) 52.219-4, Notice of Price Evaluation Preference for HUBZone Small Business Concerns (Oct 2022) (if the offeror elects to waive the preference, it shall so indicate in its offer) (15 U.S. C. 657a).

[ ] (17) [Reserved]

[ ] (18)

(i) 52.219-6, Notice of Total Small Business Set-Aside (Nov 2020) (15 U.S.C. 644).

[ ] (ii) Alternate I (Mar 2020) of 52.219-6.

[ ] (19)

(i) 52.219-7, Notice of Partial Small Business Set-Aside (Nov 2020) (15 U.S.C. 644).

[ ] (ii) Alternate I (Mar 2020) of 52.219-7.

[ ] (20) 52.219-8, Utilization of Small Business Concerns (Jan 2025)(15 U.S.C. 637(d)(2) and (3)).

[ ] (21)

(i) 52.219-9, Small Business Subcontracting Plan (Jan 2025) (15 U.S.C. 637(d)(4)).

[ ] (ii) Alternate I (Nov 2016) of 52.219-9.

[ ] (iii) Alternate II (Nov 2016) of 52.219-9.

[ ] (iv) Alternate III (Jun 2020) of 52.219-9.

[ ] (v) Alternate IV (Jan 2025) of 52.219-9.

[ ] (22)

(i) 52.219-13, Notice of Set-Aside of Orders (Mar 2020) (15 U.S.C. 644(r)).

[ ] (ii) Alternate I (Mar 2020) of 52.219-13.

[ ] (23) 52.219-14, Limitations on Subcontracting (Oct 2022) (15 U.S.C. 657s).

[ ] (24) 52.219-16, Liquidated Damages-Subcontracting Plan (Sep 2021) (15 U.S.C. 637(d)(4)(F)(i)).

[ ] (25) 52.219-27, Notice of Set-Aside for, or Sole-Source Award to, Service-Disabled Veteran-Owned Small Business (SDVOSB) Concerns Eligible Under the SDVOSB Program (Feb 2024) (15 U.S.C. 657f).

[ ] (26)

(i) 52.219-28, Postaward Small Business Program Rerepresentation (Jan 2025) (15 U.S.C. 632(a)(2)).

[ ] (ii) Alternate I (Mar 2020) of 52.219-28.

[ ] (27) 52.219-29, Notice of Set-Aside for, or Sole-Source Award to, Economically

Disadvantaged Women-Owned Small Business Concerns (Oct 2022) (15 U.S.C. 637(m)).

[ ] (28) 52.219-30, Notice of Set-Aside for, or Sole-Source Award to, Women-Owned Small Business Concerns Eligible Under the Women-Owned Small Business Program (Oct 2022) (15 U.S.C. 637(m)).

[ ] (29) 52.219-32, Orders Issued Directly Under Small Business Reserves (Mar 2020) (15 U.S.C. 644(r)).

[ ] (30) 52.219-33, Nonmanufacturer Rule (Sep 2021) (15 U.S.C. 637(a)(17)).

[ ] (31) 52.222-3, Convict Labor (Jun 2003) (E.O.11755).

[ ] (32) 52.222-19, Child Labor-Cooperation with Authorities and Remedies (Jan 2025)(E.O. 13126).

[ ] (33) [Reserved]

[ ] (34) [Reserved]

[ ] (35)

(i) 52.222-35, Equal Opportunity for Veterans (Jun 2020) (38 U.S.C. 4212).

[ ] (ii) Alternate I (Jul 2014) of 52.222-35.

[ ] (36)

(i) 52.222-36, Equal Opportunity for Workers with Disabilities (Jun 2020) (29 U.S.C. 793).

[ ] (ii) Alternate I (Jul 2014) of 52.222-36.

[ ] (37) 52.222-37, Employment Reports on Veterans (Jun 2020) (38 U.S.C. 4212).

[ ] (38) 52.222-40, Notification of Employee Rights Under the National Labor Relations Act (Dec 2010) (E.O. 13496).

[ ] (39)

(i) 52.222-50, Combating Trafficking in Persons (Nov 2021) (22 U.S.C. chapter 78 and E.O. 13627).

[ ] (ii) Alternate I (Mar 2015) of 52.222-50 (22 U.S.C. chapter 78 and E.O. 13627).

[ ] (40) 52.222-54, Employment Eligibility Verification (Jan 2025) (Executive Order 12989). (Not applicable to the acquisition of commercially available off-the-shelf items or certain other types

of commercial products or commercial services as prescribed in FAR 22.1803.)

[ ] (41)

(i) 52.223-9, Estimate of Percentage of Recovered Material Content for EPA-Designated Items (May 2008) (42 U.S.C. 6962(c)(3)(A)(ii)). (Not applicable to the acquisition of commercially available off-the-shelf items.)

[ ] (ii) Alternate I (May 2008) of 52.223-9 (42 U.S.C. 6962(i)(2)(C)). (Not applicable to the acquisition of commercially available off-the-shelf items.)

[ ] (42) 52.223-11, Ozone-Depleting Substances and High Global Warming Potential Hydrofluorocarbons (May 2024) (42 U.S.C. 7671, et seq.).

[ ] (43) 52.223-12, Maintenance, Service, Repair, or Disposal of Refrigeration Equipment and Air Conditioners (May 2024) (42 U.S.C. 7671, et seq.).

[ ] (44) 52.223-20, Aerosols (May 2024) (42 U.S.C. 7671, et seq.).

[ ] (45) 52.223-21, Foams (May 2024) (42 U.S.C. 7671, et seq.).

[ ] (46) 52.223-23, Sustainable Products and Services (MAR 2025) (DEVIATION 2025-O0004)) (7 U.S.C. 8102, 42 U.S.C. 6962, 42 U.S.C. 8259b, and 42 U.S.C. 7671l).

[ ] (47)

(i) 52.224-3 Privacy Training (Jan 2017) (5 U.S.C. 552 a).

[ ] (ii) Alternate I (Jan 2017) of 52.224-3.

[ ] (48)

(i) 52.225-1, Buy American-Supplies (Oct 2022) (41 U.S.C. chapter 83).

[ ] (ii) Alternate I (Oct 2022) of 52.225-1.

[ ] (49)

(i) 52.225-3, Buy American-Free Trade Agreements-Israeli Trade Act (NOV 2023) (19 U.S.C. 3301 note, 19 U.S.C. 2112 note, 19 U.S.C. 3805 note, 19 U.S.C. 4001 note, 19 U.S.C. chapter 29 (sections 4501-4732), Public Law 103-182, 108-77, 108-78, 108-286, 108-302, 109-53, 109-169, 109-283, 110-138, 112-41, 112-42, and 112-43.

[ ] (ii) Alternate I [Reserved].

[ ] (iii) Alternate II (Jan 2025) of 52.225-3.

[ ] (iv) Alternate III (Feb 2024) of 52.225-3.

[ ] (v) Alternate IV (Oct 2022) of 52.225-3.

[ ] (50) 52.225-5, Trade Agreements (NOV 2023) (19 U.S.C. 2501, et seq., 19 U.S.C. 3301 note).

[ ] (51) 52.225-13, Restrictions on Certain Foreign Purchases (Feb 2021) (E.O.'s, proclamations, and statutes administered by the Office of Foreign Assets Control of the Department of the Treasury).

[ ] (52) 52.225-26, Contractors Performing Private Security Functions Outside the United States (Oct 2016) (Section 862, as amended, of the National Defense Authorization Act for Fiscal Year 2008; 10 U.S.C. Subtitle A, Part V, Subpart G Note).

[ ] (53) 52.226-4, Notice of Disaster or Emergency Area Set-Aside (Nov 2007) (42 U.S.C. 5150).

[ ] (54) 52.226-5, Restrictions on Subcontracting Outside Disaster or Emergency Area (Nov 2007) (42 U.S.C. 5150).

[ ] (55) 52.226-8, Encouraging Contractor Policies to Ban Text Messaging While Driving (May 2024) (E.O. 13513).

[ ] (56) 52.229-12, Tax on Certain Foreign Procurements (Feb 2021).

[ ] (57) 52.232-29, Terms for Financing of Purchases of Commercial Products and Commercial Services (Nov 2021) (41 U.S.C. 4505, 10 U.S.C. 3805).

[ ] (58) 52.232-30, Installment Payments for Commercial Products and Commercial Services (Nov 2021) (41 U.S.C. 4505, 10 U.S.C. 3805).

[ ] (59) 52.232-33, Payment by Electronic Funds Transfer-System for Award Management (Oct2018) (31 U.S.C. 3332).

[ ] (60) 52.232-34, Payment by Electronic Funds Transfer-Other than System for Award Management (Jul 2013) (31 U.S.C. 3332).

[ ] (61) 52.232-36, Payment by Third Party (May 2014) (31 U.S.C. 3332).

[ ] (62) 52.239-1, Privacy or Security Safeguards (Aug 1996) (5 U.S.C. 552a).

[ ] (63) 52.240-1, Prohibition on Unmanned Aircraft Systems Manufactured or Assembled by American Security Drone Act-Covered Foreign Entities (Nov 2024) (Sections 1821-1826, Pub. L. 118-31, 41 U.S.C. 3901 note prec.).

[ ] (64) 52.242-5, Payments to Small Business Subcontractors (Jan 2017) (15 U.S.C. 637(d)(13)).

[ ] (65)

(i) 52.247-64, Preference for Privately Owned U.S.-Flag Commercial Vessels (Nov 2021) (46 U.S.C. 55305 and 10 U.S.C. 2631).

[ ] (ii) Alternate I (Apr 2003) of 52.247-64.

[ ] (iii) Alternate II (Nov 2021) of 52.247-64.

(c) The Contractor shall comply with the FAR clauses in this paragraph (c), applicable to commercial services, that the Contracting Officer has indicated as being incorporated in this contract by reference to implement provisions of law or Executive orders applicable to acquisitions of commercial products and commercial services:

[Contracting Officer check as appropriate.]

[ ] (1) 52.222-41, Service Contract Labor Standards (Aug 2018) (41 U.S.C. chapter67).

[ ] (2) 52.222-42, Statement of Equivalent Rates for Federal Hires (May 2014) (29 U.S.C. 206 and 41 U.S.C. chapter 67).

[ ] (3) 52.222-43, Fair Labor Standards Act and Service Contract Labor Standards-Price Adjustment (Multiple Year and Option Contracts) (Aug 2018) (29 U.S.C. 206 and 41 U.S.C. chapter 67).

[ ] (4) 52.222-44, Fair Labor Standards Act and Service Contract Labor Standards-Price Adjustment (May 2014) (29U.S.C.206 and 41 U.S.C. chapter 67).

[ ] (5) 52.222-51, Exemption from Application of the Service Contract Labor Standards to Contracts for Maintenance, Calibration, or Repair of Certain Equipment-Requirements (May 2014) (41 U.S.C. chapter 67).

[ ] (6) 52.222-53, Exemption from Application of the Service Contract Labor Standards to Contracts for Certain Services-Requirements (May 2014) (41 U.S.C. chapter 67).

[ ] (7) 52.222-55, Minimum Wages for Contractor Workers Under Executive Order 14026 (Jan 2022).

[ ] (8) 52.222-62, Paid Sick Leave Under Executive Order 13706 (Jan 2022) (E.O. 13706).

[ ] (9) 52.226-6, Promoting Excess Food Donation to Nonprofit Organizations (Jun 2020) (42 U. S.C. 1792).

[ ] (10) 52.247-69, Reporting Requirement for U.S.-Flag Air Carriers Regarding Training to Prevent Human Trafficking (Jan 2025) (49 U.S.C. 40118(g)).

(d) Comptroller General Examination of Record. The Contractor shall comply with the provisions of this paragraph (d) if this contract was awarded using other than sealed bid, is in excess of the simplified acquisition threshold, as defined in FAR 2.101, on the date of award of this contract, and does not contain the clause at 52.215-2, Audit and Records-Negotiation.

(1) The Comptroller General of the United States, or an authorized representative of the Comptroller General, shall have access to and right to examine any of the Contractor's directly pertinent records involving transactions related to this contract.

(2) The Contractor shall make available at its offices at all reasonable times the records, materials, and other evidence for examination, audit, or reproduction, until 3 years after final payment under this contract or for any shorter period specified in FAR subpart 4.7, Contractor Records Retention, of the other clauses of this contract. If this contract is completely or partially terminated, the records relating to the work terminated shall be made available for 3 years after any resulting final termination settlement. Records relating to appeals under the disputes clause or to litigation or the settlement of claims arising under or relating to this contract shall be made available until such appeals, litigation, or claims are finally resolved.

(3) As used in this clause, records include books, documents, accounting procedures and practices, and other data, regardless of type and regardless of form. This does not require the Contractor to create or maintain any record that the Contractor does not maintain in the ordinary course of business or pursuant to a provision of law.

(e)

(1) Notwithstanding the requirements of the clauses in paragraphs (a), (b), (c), and (d) of this clause, the Contractor is not required to flow down any FAR clause, other than those in this paragraph (e)(1), in a subcontract for commercial products or commercial services. Unless otherwise indicated below, the extent of the flow down shall be as required by the clause-

(i) 52.203-13, Contractor Code of Business Ethics and Conduct (Nov 2021) (41 U.S.C. 3509).

(ii) 52.203-17, Contractor Employee Whistleblower Rights (Nov 2023) (41 U.S.C. 4712).

(iii) 52.203-19, Prohibition on Requiring Certain Internal Confidentiality Agreements or Statements (Jan 2017) (section 743 of Division E, Title VII, of the Consolidated and Further Continuing Appropriations Act, 2015 (Pub. L. 113-235) and its successor provisions in subsequent appropriations acts (and as extended in continuing resolutions)).

(iv) 52.204-23, Prohibition on Contracting for Hardware, Software, and Services Developed or Provided by Kaspersky Lab Covered Entities (Dec 2023) (Section 1634 of Pub. L. 115-91).

(v) 52.204-25, Prohibition on Contracting for Certain Telecommunications and Video Surveillance Services or Equipment. (Nov 2021) (Section 889(a)(1)(A) of Pub. L. 115-232).

(vi) 52.204-27, Prohibition on a ByteDance Covered Application (Jun 2023) (Section 102 of Division R of Pub. L. 117-328).

(vii)

(A) 52.204-30, Federal Acquisition Supply Chain Security Act Orders-Prohibition. (Dec 2023) (Pub. L. 115-390, title II).

(B) Alternate I (Dec 2023) of 52.204-30.

(viii) 52.219-8, Utilization of Small Business Concerns (Jan 2025) (15 U.S.C. 637(d)(2) and (3)), in all subcontracts that offer further subcontracting opportunities. If the subcontract (except subcontracts to small business concerns) exceeds the applicable threshold specified in FAR 19.702(a) on the date of subcontract award, the subcontractor must include 52.219-8 in lower tier subcontracts that offer subcontracting opportunities.

(ix) [Reserved]

(x) [Reserved]

(xi) 52.222-35, Equal Opportunity for Veterans (Jun 2020) (38 U.S.C. 4212).

(xii) 52.222-36, Equal Opportunity for Workers with Disabilities (Jun 2020) (29 U.S.C. 793).

(xiii) 52.222-37, Employment Reports on Veterans (Jun 2020) (38 U.S.C. 4212).

(xiv) 52.222-40, Notification of Employee Rights Under the National Labor Relations Act (Dec 2010) (E.O. 13496). Flow down required in accordance with paragraph (f) of FAR clause 52.222-40.

(xv) 52.222-41, Service Contract Labor Standards (Aug 2018) (41 U.S.C. chapter 67).

(xvi)

(A) 52.222-50, Combating Trafficking in Persons (Nov 2021) (22 U.S.C. chapter 78 and E.O 13627).

(B) Alternate I (Mar 2015) of 52.222-50 (22 U.S.C. chapter 78 and E.O. 13627).

(xvii) 52.222-51, Exemption from Application of the Service Contract Labor Standards to Contracts for Maintenance, Calibration, or Repair of Certain Equipment-Requirements (May 2014) (41 U.S.C. chapter 67).

(xviii) 52.222-53, Exemption from Application of the Service Contract Labor Standards to Contracts for Certain Services-Requirements (May 2014) (41 U.S.C. chapter 67).

(xix) 52.222-54, Employment Eligibility Verification (Jan 2025) (E.O. 12989).

(xx) 52.222-55, Minimum Wages for Contractor Workers Under Executive Order 14026 (Jan 2022).

(xxi) 52.222-62, Paid Sick Leave Under Executive Order 13706 (Jan 2022) (E.O. 13706).

(xxii)

(A) 52.224-3, Privacy Training (Jan 2017) (5 U.S.C. 552a).

(B) Alternate I (Jan 2017) of 52.224-3.

(xxiii) 52.225-26, Contractors Performing Private Security Functions Outside the United States (Oct 2016) (Section 862, as amended, of the National Defense Authorization Act for Fiscal Year 2008; 10 U.S.C. Subtitle A, Part V, Subpart G Note).

(xxiv) 52.226-6, Promoting Excess Food Donation to Nonprofit Organizations (Jun 2020) (42 U. S.C. 1792). Flow down required in accordance with paragraph (e) of FAR clause 52.226-6.

(xxv) 52.232-40, Providing Accelerated Payments to Small Business Subcontractors (Mar 2023) (31 U.S.C. 3903 and 10 U.S.C. 3801). Flow down required in accordance with paragraph (c) of 52.232-40.

(xxvi) 52.240-1, Prohibition on Unmanned Aircraft Systems Manufactured or Assembled by American Security Drone Act-Covered Foreign Entities (Nov 2024) (Sections 1821-1826, Pub. L. 118-31, 41 U.S.C. 3901 note prec.).

(xxvii) 52.247-64, Preference for Privately Owned U.S.-Flag Commercial Vessels (Nov 2021) (46 U.S.C. 55305 and 10 U.S.C. 2631). Flow down required in accordance with paragraph (d) of FAR clause 52.247-64.

(2) While not required, the Contractor may include in its subcontracts for commercial products and commercial services a minimal number of additional clauses necessary to satisfy its contractual obligations.

(End of clause)

Addendum to Contract Clauses

FAR Clauses Incorporated by Reference

Number	Title	Effective Date	Alternate Deviation	Variation Effective Date
52.209-10	Prohibition on Contracting With Inverted Domestic Corporations. (Deviation)	2026-02		
52.222-3	Convict Labor. (Deviation)	2026-02		
52.223-23	Sustainable Products. (Deviation)	2026-02		
52.240-91	Security Prohibitions and Exclusions. (Deviation)	2026-02		
52.244-6	Subcontracts for Commercial Products and Commercial Services. (Deviation)	2026-02		
52.245-1	Government Property.	2021-09		

DFARS Clauses Incorporated by Reference

Number	Title	Effective Date	Alternate Deviation	Variation Effective Date
252.237-7010	Prohibition on Interrogation of Detainees by Contractor Personnel.	2023-01		
252.245-7003	Contractor Property Management System Administration	2025-01		

FAR Clauses Incorporated by Full Text

Number	Title	Effective Date	Alternate Deviation	Variation Effective Date
52.217-7	Option for Increased Quantity-Separately Priced Line Item.	1989-03		

Option for Increased Quantity-Separately Priced Line Item (Mar 1989)

The Government may require the delivery of the numbered line item, identified in the Schedule as an option item, in the quantity and at the price stated in the Schedule. The Contracting Officer may exercise the option by written notice to the Contractor within 30 days[insert in the clause the period of time in which the Contracting Officer has to exercise the option]. Delivery of added items shall continue at the same rate that like items are called for under the contract, unless the parties otherwise agree.

(End of clause)

Solicitation Provisions

FAR Provisions Incorporated by Reference

Number	Title	Effective Date	Alternate Deviation	Variation Effective Date
52.204-7	System for Award Management-Registration. (Deviation)	2026-02		
52.212-1	Instructions to Offerors-Commercial Products and Commercial Services. (Deviation)	2026-02		

DFARS Provisions Incorporated by Reference

Number	Title	Effective Date	Alternate Deviation	Variation Effective Date
252.203-7005	Representation Relating to Compensation of Former DoD Officials.	2022-09		
252.204-7024	Notice on the Use of the Supplier Performance Risk System.	2023-03		

DFARS Provisions Incorporated by Full Text

Number	Title	Effective Date	Alternate Deviation	Variation Effective Date
252.204-7017	Prohibition on the Acquisition of Covered Defense	2021-05		

Telecommunications Equipment
or Services-Representation.

PROHIBITION ON THE ACQUISITION OF COVERED DEFENSE TELECOMMUNICATIONS EQUIPMENT OR SERVICES-REPRESENTATION (MAY 2021)

The Offeror is not required to complete the representation in this provision if the Offeror has represented in the provision at 252.204-7016, Covered Defense Telecommunications Equipment or Services-Representation, that it "does not provide covered defense telecommunications equipment or services as a part of its offered products or services to the Government in the performance of any contract, subcontract, or other contractual instrument."

(a) Definitions. "Covered defense telecommunications equipment or services," "covered mission," "critical technology," and "substantial or essential component," as used in this provision, have the meanings given in the 252.204-7018 clause, Prohibition on the Acquisition of Covered Defense Telecommunications Equipment or Services, of this solicitation.

(b) Prohibition. Section 1656 of the National Defense Authorization Act for Fiscal Year 2018 (Pub. L. 115-91) prohibits agencies from procuring or obtaining, or extending or renewing a contract to procure or obtain, any equipment, system, or service to carry out covered missions that uses covered defense telecommunications equipment or services as a substantial or essential component of any system, or as critical technology as part of any system.

(c) Procedures. The Offeror shall review the list of excluded parties in the System for Award Management (SAM) at https://www.sam.gov for entities that are excluded when providing any equipment, system, or service to carry out covered missions that uses covered defense telecommunications equipment or services as a substantial or essential component of any system, or as critical technology as part of any system, unless a waiver is granted.

(d) Representation. If in its annual representations and certifications in SAM the Offeror has represented in paragraph (c) of the provision at 252.204-7016, Covered Defense Telecommunications Equipment or Services-Representation, that it "does" provide covered defense telecommunications equipment or services as a part of its offered products or services to the Government in the performance of any contract, subcontract, or other contractual instrument, then the Offeror shall complete the following additional representation:

The Offeror represents that it [ ] will [ ] will not provide covered defense telecommunications

equipment or services as a part of its offered products or services to DoD in the performance of any award resulting from this solicitation.

(e) Disclosures. If the Offeror has represented in paragraph (d) of this provision that it "will provide covered defense telecommunications equipment or services," the Offeror shall provide the following information as part of the offer:

(1) A description of all covered defense telecommunications equipment and services offered (include brand or manufacturer; product, such as model number, original equipment manufacturer (OEM) number, manufacturer part number, or wholesaler number; and item description, as applicable).

(2) An explanation of the proposed use of covered defense telecommunications equipment and services and any factors relevant to determining if such use would be permissible under the prohibition referenced in paragraph (b) of this provision.

(3) For services, the entity providing the covered defense telecommunications services (include entity name, unique entity identifier, and Commercial and Government Entity (CAGE) code, if known).

(4) For equipment, the entity that produced or provided the covered defense telecommunications equipment (include entity name, unique entity identifier, CAGE code, and whether the entity was the OEM or a distributor, if known).

(End of provision)

Offeror Representations and Certifications - Commercial Products and Commercial Services

FAR Provisions Incorporated by Full Text

Number	Title	Effective Date	Alternate Deviation	Variation Effective Date
52.212-3	Offeror Representations and Certifications-Commercial Products and Commercial Services. (DEVIATION 2025-O0003 and 2025-O0004)	2025-03	Deviation 2025-O0004	2025-03

Offeror Representations and Certifications-Commercial Products and Commercial Services (MAR 2025) (DEVIATION 2025-O0003 and 2025-O0004)

(a) Definitions. As used in this provision-

Covered telecommunications equipment or services has the meaning provided in the clause 52.204-25, Prohibition on Contracting for Certain Telecommunications and Video Surveillance Services or Equipment.

Economically disadvantaged women-owned small business (EDWOSB) concern means a small business concern that is at least 51 percent directly and unconditionally owned by, and the management and daily business operations of which are controlled by, one or more women who are citizens of the United States and who are economically disadvantaged in accordance with 13 CFR part 127, and the concern is certified by SBA or an approved third-party certifier in accordance with 13 CFR 127.300. It automatically qualifies as a women-owned small business eligible under the WOSB Program.

Forced or indentured child labor means all work or service-

(1) Exacted from any person under the age of 18 under the menace of any penalty for its nonperformance and for which the worker does not offer himself voluntarily; or

(2) Performed by any person under the age of 18 pursuant to a contract the enforcement of which can be accomplished by process or penalties.

Highest-level owner means the entity that owns or controls an immediate owner of the offeror, or that owns or controls one or more entities that control an immediate owner of the offeror. No entity owns or exercises control of the highest level owner.

Immediate owner means an entity, other than the offeror, that has direct control of the offeror. Indicators of control include, but are not limited to, one or more of the following: ownership or interlocking management, identity of interests among family members, shared facilities and equipment, and the common use of employees.

Inverted domestic corporation, means a foreign incorporated entity that meets the definition of an inverted domestic corporation under 6 U.S.C. 395(b), applied in accordance with the rules and definitions of 6 U.S.C. 395(c).

Manufactured end product means any end product in product and service codes (PSCs) 1000-9999, except-

(1) PSC 5510, Lumber and Related Basic Wood Materials;

(2) Product or Service Group (PSG) 87, Agricultural Supplies;

(3) PSG 88, Live Animals;

(4) PSG 89, Subsistence;

(5) PSC 9410, Crude Grades of Plant Materials;

(6) PSC 9430, Miscellaneous Crude Animal Products, Inedible;

(7) PSC 9440, Miscellaneous Crude Agricultural and Forestry Products;

(8) PSC 9610, Ores;

(9) PSC 9620, Minerals, Natural and Synthetic; and

(10) PSC 9630, Additive Metal Materials.

Place of manufacture means the place where an end product is assembled out of components, or otherwise made or processed from raw materials into the finished product that is to be provided to the Government. If a product is disassembled and reassembled, the place of reassembly is not the place of manufacture.

Predecessor means an entity that is replaced by a successor and includes any predecessors of the predecessor.

Reasonable inquiry has the meaning provided in the clause 52.204-25, Prohibition on Contracting for Certain Telecommunications and Video Surveillance Services or Equipment.

Restricted business operations means business operations in Sudan that include power production activities, mineral extraction activities, oil-related activities, or the production of military equipment, as those terms are defined in the Sudan Accountability and Divestment Act of 2007 (Pub. L. 110-174). Restricted business operations do not include business operations that the person (as that term is defined in Section 2 of the Sudan Accountability and Divestment Act of 2007) conducting the business can demonstrate-

(1) Are conducted under contract directly and exclusively with the regional government of southern Sudan;

(2) Are conducted pursuant to specific authorization from the Office of Foreign Assets Control in the Department of the Treasury, or are expressly exempted under Federal law from the requirement to be conducted under such authorization;

(3) Consist of providing goods or services to marginalized populations of Sudan;

(4) Consist of providing goods or services to an internationally recognized peacekeeping force or humanitarian organization;

(5) Consist of providing goods or services that are used only to promote health or education; or

(6) Have been voluntarily suspended."Sensitive technology"-

Sensitive technology-

(1) Means hardware, software, telecommunications equipment, or any other technology that is to be used specifically-

(i) To restrict the free flow of unbiased information in Iran; or

(ii) To disrupt, monitor, or otherwise restrict speech of the people of Iran; and

(2) Does not include information or informational materials the export of which the President does not have the authority to regulate or prohibit pursuant to section 203(b)(3)of the International Emergency Economic Powers Act (50 U.S.C. 1702(b)(3)).

Service-disabled veteran-owned small business (SDVOSB) concern means a small business concern-

(1)

(i) Not less than 51 percent of which is owned and controlled by one or more service-disabled veterans or, in the case of any publicly owned business, not less than 51 percent of the stock of which is owned by one or more service-disabled veterans; and

(ii) The management and daily business operations of which are controlled by one or more service-disabled veterans or, in the case of a service-disabled veteran with permanent and severe disability, the spouse or permanent caregiver of such veteran; or

(2) A small business concern eligible under the SDVOSB Program in accordance with 13 CFR part 128 (see subpart 19.14).

(3) Service-disabled veteran, as used in this definition, means a veteran as defined in 38 U.S.C. 101(2), with a disability that is service connected, as defined in 38 U.S.C. 101(16), and who is registered in the Beneficiary Identification and Records Locator Subsystem, or successor system that is maintained by the Department of Veterans Affairs' Veterans Benefits Administration, as a service-disabled veteran.

Service-disabled veteran-owned small business (SDVOSB) concern eligible under the SDVOSB Program means an SDVOSB concern that-

(1) Effective January 1, 2024, is designated in the System for Award Management (SAM) as certified by the Small Business Administration (SBA) in accordance with 13 CFR 128.300; or

(2) Has represented that it is an SDVOSB concern in SAM and submitted a complete application for certification to SBA on or before December 31, 2023.

Service-disabled veteran-owned small business (SDVOSB) Program means a program that authorizes contracting officers to limit competition, including award on a sole-source basis, to SDVOSB concerns eligible under the SDVOSB Program.

Small business concern-

(1) Means a concern, including its affiliates, that is independently owned and operated, not dominant in its field of operation, and qualified as a small business under the criteria in 13 CFR part 121 and size standards in this solicitation.

(2) Affiliates, as used in this definition, means business concerns, one of whom directly or indirectly controls or has the power to control the others, or a third party or parties control or have the power to control the others. In determining whether affiliation exists, consideration is given to all appropriate factors including common ownership, common management, and contractual relationships. SBA determines affiliation based on the factors set forth at 13 CFR 121.103.

Small disadvantaged business concern, consistent with 13 CFR 124.1001, means a small business concern under the size standard applicable to the acquisition, that-

(1) Is at least 51 percent unconditionally and directly owned (as defined at 13 CFR 124.105) by-

(i) One or more socially disadvantaged (as defined at13 CFR 124.103) and economically

disadvantaged (as defined at 13 CFR 124.104) individuals who are citizens of the United States; and

(ii) Each individual claiming economic disadvantage has a net worth not exceeding the threshold at 13 CFR 124.104(c)(2) after taking into account the applicable exclusions set forth at 13 CFR124.104(c)(2); and

(2) The management and daily business operations of which are controlled (as defined at 13. CFR 124.106) by individuals, who meet the criteria in paragraphs (1)(i) and (ii) of this definition.

Subsidiary means an entity in which more than 50 percent of the entity is owned-

(1) Directly by a parent corporation; or

(2) Through another subsidiary of a parent corporation

Successor means an entity that has replaced a predecessor by acquiring the assets and carrying out the affairs of the predecessor under a new name (often through acquisition or merger). The term "successor" does not include new offices/divisions of the same company or a company that only changes its name. The extent of the responsibility of the successor for the liabilities of the predecessor may vary, depending on State law and specific circumstances.

Veteran-owned small business concern means a small business concern-

(1) Not less than 51 percent of which is owned and controlled by one or more veterans (as defined at 38 U.S.C. 101(2)) or, in the case of any publicly owned business, not less than 51 percent of the stock of which is owned by one or more veterans; and

(2) The management and daily business operations of which are controlled by one or more veterans.

Women-owned business concern means a concern which is at least 51 percent owned by one or more women; or in the case of any publicly owned business, at least 51 percent of its stock is

owned by one or more women; and whose management and daily business operations are controlled by one or more women

Women-owned small business concern means a small business concern-

(1) That is at least 51 percent owned by one or more women; or, in the case of any publicly owned business, at least51 percent of the stock of which is owned by one or more women; and

(2) Whose management and daily business operations are controlled by one or more women.

Women-owned small business (WOSB) concern eligible under the WOSB Program (in accordance with 13 CFR part 127), means a small business concern that is at least 51 percent directly and unconditionally owned by, and the management and daily business operations of which are controlled by, one or more women who are citizens of the United States, and the concern is certified by SBA or an approved third-party certifier in accordance with 13 CFR 127.300.

(b)

(1) Annual Representations and Certifications. Any changes provided by the Offeror in paragraph (b)(2) of this provision do not automatically change the representations and certifications in SAM.

(2) The offeror has completed the annual representations and certifications electronically in SAM accessed through http://www.sam.gov. After reviewing SAM information, the Offeror verifies by submission of this offer that the representations and certifications currently posted electronically at FAR 52.212-3, Offeror Representations and Certifications-Commercial Products and Commercial Services, have been entered or updated in the last 12 months, are current, accurate, complete, and applicable to this solicitation (including the business size standard(s) applicable to the NAICS code(s) referenced for this solicitation), at the time this offer is submitted and are incorporated in this offer by reference (see FAR 4.1201), except for paragraphs ____.

[Offeror to identify the applicable paragraphs at (c) through (v) of this provision that the offeror has completed for the purposes of this solicitation only, if any.

These amended representation(s) and/or certification(s) are also incorporated in this offer and are current, accurate, and complete as of the date of this offer.

Any changes provided by the offeror are applicable to this solicitation only, and do not result in an update to the representations and certifications posted electronically on SAM.]

(c) Offerors must complete the following representations when the resulting contract is for supplies to be delivered or services to be performed in the United States or its outlying areas, or when the contracting officer has applied part 19 in accordance with 19.000(b)(1)(ii). Check all that apply.

(1) Small business concern. The offeror represents as part of its offer that-

(i) It [ ] is, [ ] is not a small business concern; or

(ii) It [ ] is, [ ] is not a small business joint venture that complies with the requirements of 13 CFR 121.103(h) and 13 CFR 125.8(a) and (b). [The offeror shall enter the name and unique entity identifier of each party to the joint venture: _____.]

(2) Veteran-owned small business concern. [Complete only if the offeror represented itself as a small business concern in paragraph (c)(1) of this provision.] The offeror represents as part of its offer that it [ ] is, [ ] is not a veteran-owned small business concern.

(3) SDVOSB concern. [Complete only if the offeror represented itself as a veteran-owned small business concern in paragraph (c)(2) of this provision.] The offeror represents that it [ ] is, [ ] is not an SDVOSB concern.

(4) SDVOSB concern joint venture eligible under the SDVOSB Program. The offeror represents that it [ ] is, [ ] is not an SDVOSB joint venture eligible under the SDVOSB Program that complies with the requirements of 13 CFR 128.402. [Complete only if the offeror represented itself as an SDVOSB concern in paragraph (c)(3) of this provision.] [The offeror shall enter the name and unique entity identifier of each party to the joint venture: _____.]

(5) Small disadvantaged business concern. [Complete only if the offeror represented itself as a small business concern in paragraph (c)(1) of this provision.] The offeror represents that it [ ] is, [ ] is not a small disadvantaged business concern as defined in 13 CFR 124.1001.

(6) Women-owned small business concern. [Complete only if the offeror represented itself as a

small business concern in paragraph (c)(1) of this provision.] The offeror represents that it [ ] is, [ ] is not a women-owned small business concern.

(7) WOSB joint venture eligible under the WOSB Program. The offeror represents that it [ ] is, [ ] is not a joint venture that complies with the requirements of 13 CFR 127.506(a) through (c). [The offeror shall enter the name and unique entity identifier of each party to the joint venture: _____.]

(8) Economically disadvantaged women-owned small business (EDWOSB) joint venture. The offeror represents that it [ ] is, [ ] is not a joint venture that complies with the requirements of 13 CFR 127.506(a) through (c). [The offeror shall enter the name and unique entity identifier of each party to the joint venture: _____.]

Note to paragraphs (c)(9) and (10): Complete paragraphs (c)(9) and (10) only if this solicitation is expected to exceed the simplified acquisition threshold.

(9) Women-owned business concern (other than small business concern). [Complete only if the offeror is a women-owned business concern and did not represent itself as a small business concern in paragraph (c)(1) of this provision.] The offeror represents that it [ ] is a women-owned business concern.

(10) Tie bid priority for labor surplus area concerns. If this is an invitation for bid, small business offerors may identify the labor surplus areas in which costs to be incurred on account of manufacturing or production (by offeror or first-tier subcontractors) amount to more than 50 percent of the contract price:_____

(11) HUBZone small business concern. [Complete only if the offeror represented itself as a small business concern in paragraph (c)(1) of this provision.] The offeror represents, as part of its offer, that-

(i) It [ ] is, [ ] is not a HUBZone small business concern listed, on the date of this representation, as having been certified by SBA as a HUBZone small business concern in the Dynamic Small Business Search and SAM, and will attempt to maintain an employment rate of HUBZone residents of 35 percent of its employees during performance of a HUBZone contract (see 13 CFR 126.200(e)(1)); and

(ii) It [ ] is, [ ] is not a HUBZone joint venture that complies with the requirements of 13 CFR 126.616(a) through (c). [The offeror shall enter the name and unique entity identifier of each party to the joint venture: ____.] Each HUBZone small business concern participating in the

HUBZone joint venture shall provide representation of its HUBZone status.

(d) [Reserved]

(e) Certification Regarding Payments to Influence Federal Transactions (31 http://uscode.house.gov/ U.S.C. 1352). (Applies only if the contract is expected to exceed $150,000.) By submission of its offer, the offeror certifies to the best of its knowledge and belief that no Federal appropriated funds have been paid or will be paid to any person for influencing or attempting to influence an officer or employee of any agency, a Member of Congress, an officer or employee of Congress or an employee of a Member of Congress on his or her behalf in connection with the award of any resultant contract. If any registrants under the Lobbying Disclosure Act of 1995 have made a lobbying contact on behalf of the offeror with respect to this contract, the offeror shall complete and submit, with its offer, OMB Standard Form LLL, Disclosure of Lobbying Activities, to provide the name of the registrants. The offeror need not report regularly employed officers or employees of the offeror to whom payments of reasonable compensation were made.

(f) Buy American Certificate. (Applies only if the clause at Federal Acquisition Regulation (FAR) 52.225-1, Buy American-Supplies, is included in this solicitation.)

(1)

(i) The Offeror certifies that each end product, except those listed in paragraph (f)(2) of this provision, is a domestic end product and that each domestic end product listed in paragraph (f)(3) of this provision contains a critical component.

(ii) The Offeror shall list as foreign end products those end products manufactured in the United States that do not qualify as domestic end products. For those foreign end products that do not consist wholly or predominantly of iron or steel or a combination of both, the Offeror shall also indicate whether these foreign end products exceed 55 percent domestic content, except for those that are COTS items. If the percentage of the domestic content is unknown, select "no".

(iii) The Offeror shall separately list the line item numbers of domestic end products that contain a critical component (see FAR 25.105).

(iv) The terms "commercially available off-the-shelf (COTS) item," "critical component,"

"domestic end product," "end product," "foreign end product," and "United States" are defined in the clause of this solicitation entitled "Buy American-Supplies."

(2) Foreign End Products:

Line Item No.	Country of Origin	Exceeds 55% domestic content (yes/no)
____	____	____
____	____	____
____	____	____

[List as necessary]

(3) Domestic end products containing a critical component:

Line Item No. ____

[List as necessary]

(4) The Government will evaluate offers in accordance with the policies and procedures of FAR part 25.

(g)

(1) Buy American-Free Trade Agreements-Israeli Trade Act Certificate. (Applies only if the clause at FAR 52.225-3, Buy American-Free Trade Agreements-Israeli Trade Act, is included in this solicitation.)

(i)

(A) The Offeror certifies that each end product, except those listed in paragraph (g)(1)(ii) or (iii) of this provision, is a domestic end product and that each domestic end product listed in paragraph (g)(1)(iv) of this provision contains a critical component.

(B) The terms "Bahraini, Moroccan, Omani, Panamanian, or Peruvian end product," "commercially available off-the-shelf (COTS) item," "critical component," "domestic end

product," "end product," "foreign end product," "Free Trade Agreement country," "Free Trade Agreement country end product," "Israeli end product," and "United States" are defined in the clause of this solicitation entitled "Buy American-Free Trade Agreements-Israeli Trade Act."

(ii) The Offeror certifies that the following supplies are Free Trade Agreement country end products (other than Bahraini, Moroccan, Omani, Panamanian, or Peruvian end products) or Israeli end products as defined in the clause of this solicitation entitled "Buy American-Free Trade Agreements-Israeli Trade Act."

Free Trade Agreement Country End Products (Other than Bahraini, Moroccan, Omani, Panamanian, or Peruvian End Products) or Israeli End Products:

Line Item No.	Country of Origin
____	____
____	____
____	____

[List as necessary]

(iii) The Offeror shall list those supplies that are foreign end products (other than those listed in paragraph (g)(1)(ii) of this provision) as defined in the clause of this solicitation entitled "Buy American-Free Trade Agreements-Israeli Trade Act." The Offeror shall list as other foreign end products those end products manufactured in the United States that do not qualify as domestic end products. For those foreign end products that do not consist wholly or predominantly of iron or steel or a combination of both, the Offeror shall also indicate whether these foreign end products exceed 55 percent domestic content, except for those that are COTS items. If the percentage of the domestic content is unknown, select "no".

Other Foreign End Products:

Line Item No.	Country of Origin	Exceeds 55% domestic content (yes/no)
____	____	____
____	____	____
____	____	____

[List as necessary]

(iv) The Offeror shall list the line item numbers of domestic end products that contain a critical component (see FAR 25.105).

Line Item No. ____

[List as necessary]

(v) The Government will evaluate offers in accordance with the policies and procedures of FAR part 25.

(2) Buy American-Free Trade Agreements-Israeli Trade Act Certificate, Alternate II. If Alternate II to the clause at FAR 52.225-3 is included in this solicitation, substitute the following paragraph (g)(1)(ii) for paragraph (g)(1)(ii) of the basic provision:

(g)(1)(ii) The offeror certifies that the following supplies are Israeli end products as defined in the clause of this solicitation entitled "Buy American-Free Trade Agreements-Israeli Trade Act":

Israeli End Products:

Line Item No.
____
____
____
[List as necessary]

(3) Buy American-Free Trade Agreements-Israeli Trade Act Certificate, Alternate III. If Alternate III to the clause at 52.225-3 is included in this solicitation, substitute the following paragraphs (g)(1)(i)(B) and (g)(1)(ii) for paragraphs (g)(1)(i)(B) and (g)(1)(ii) of the basic provision:

(g)(1)(i)(B) The terms "Korean end product", "commercially available off-the-shelf (COTS) item," "critical component," "domestic end product," "end product," "foreign end product," "Free Trade Agreement country," "Free Trade Agreement country end product," "Israeli end product," and "United States" are defined in the clause of this solicitation entitled "Buy American-Free Trade Agreements-Israeli Trade Act."

(g)(1)(ii) The Offeror certifies that the following supplies are Korean end products or Israeli end products as defined in the clause of this solicitation entitled "Buy American-Free Trade Agreements-Israeli Trade Act":

Korean End Products or Israeli End Products:

Line Item No.	Country of Origin

____ ____
____ ____
____ ____
[List as necessary]

(4) Trade Agreements Certificate. (Applies only if the clause at FAR 52.225-5, Trade Agreements, is included in this solicitation.)

(i) The offeror certifies that each end product, except those listed in paragraph (g)(4)(ii) of this provision, is a U.S.-made or designated country end product, as defined in the clause of this solicitation entitled "Trade Agreements."

(ii) The offeror shall list as other end products those end products that are not U.S.-made or designated country end products.

Other End Products:

Line Item No.	Country of Origin
____	____
____	____
____	____

[List as necessary]

(iii) The Government will evaluate offers in accordance with the policies and procedures of FAR part 25. For line items covered by the WTO GPA, the Government will evaluate offers of U.S.-made or designated country end products without regard to the restrictions of the Buy American statute. The Government will consider for award only offers of U.S.-made or designated country end products unless the Contracting Officer determines that there are no offers for such products or that the offers for such products are insufficient to fulfill the requirements of the solicitation.

(h) Certification Regarding Responsibility Matters (Executive Order 12689). (Applies only if the contract value is expected to exceed the simplified acquisition threshold.) The offeror certifies, to the best of its knowledge and belief, that the offeror and/or any of its principals-

(1) [ ] Are, [ ] are not presently debarred, suspended, proposed for debarment, or declared ineligible for the award of contracts by any Federal agency;

(2) [ ] Have, [ ] have not, within a three-year period preceding this offer, been convicted of or

had a civil judgment rendered against them for: commission of fraud or a criminal offense in connection with obtaining, attempting to obtain, or performing a Federal, state or local government contract or subcontract; violation of Federal or state antitrust statutes relating to the submission of offers; or commission of embezzlement, theft, forgery, bribery, falsification or destruction of records, making false statements, tax evasion, violating Federal criminal tax laws, or receiving stolen property;

(3) [ ] Are, [ ] are not presently indicted for, or otherwise criminally or civilly charged by a Government entity with, commission of any of these offenses enumerated in paragraph (h)(2) of this clause; and

(4) [ ] Have, [ ] have not, within a three-year period preceding this offer, been notified of any delinquent Federal taxes in an amount that exceeds the threshold at 9.104-5(a)(2) for which the liability remains unsatisfied.

(i) Taxes are considered delinquent if both of the following criteria apply:

(A) The tax liability is finally determined. The liability is finally determined if it has been assessed. A liability is not finally determined if there is a pending administrative or judicial challenge. In the case of a judicial challenge to the liability, the liability is not finally determined until all judicial appeal rights have been exhausted.

(B) The taxpayer is delinquent in making payment. A taxpayer is delinquent if the taxpayer has failed to pay the tax liability when full payment was due and required. A taxpayer is not delinquent in cases where enforced collection action is precluded.

(ii) Examples.

(A) The taxpayer has received a statutory notice of deficiency, under I.R.C. §6212, which entitles the taxpayer to seek Tax Court review of a proposed tax deficiency. This is not a delinquent tax because it is not a final tax liability. Should the taxpayer seek Tax Court review, this will not be a final tax liability until the taxpayer has exercised all judicial appeal rights.

(B) The IRS has filed a notice of Federal tax lien with respect to an assessed tax liability, and the taxpayer has been issued a notice under I.R.C. §6320 entitling the taxpayer to request a hearing with the IRS Office of Appeals contesting the lien filing, and to further appeal to the Tax Court if the IRS determines to sustain the lien filing. In the course of the hearing, the taxpayer is

entitled to contest the underlying tax liability because the taxpayer has had no prior opportunity to contest the liability. This is not a delinquent tax because it is not a final tax liability. Should the taxpayer seek tax court review, this will not be a final tax liability until the taxpayer has exercised all judicial appeal rights.

(C) The taxpayer has entered into an installment agreement pursuant to I.R.C. §6159. The taxpayer is making timely payments and is in full compliance with the agreement terms. The taxpayer is not delinquent because the taxpayer is not currently required to make full payment.

(D) The taxpayer has filed for bankruptcy protection. The taxpayer is not delinquent because enforced collection action is stayed under 11 U.S.C. §362 (the Bankruptcy Code).

(i) Certification Regarding Knowledge of Child Labor for Listed End Products (Executive Order 13126). [The Contracting Officer must list in paragraph (i)(1) any end products being acquired under this solicitation that are included in the List of Products Requiring Contractor Certification as to Forced or Indentured Child Labor, unless excluded at 22.1503(b).]

(1) Listed end products.

Listed End Product	Listed Countries of Origin
_____	_____
_____	_____

(2) Certification. [If the Contracting Officer has identified end products and countries of origin in paragraph (i)(1) of this provision, then the offeror must certify to either (i)(2)(i) or (i)(2)(ii) by checking the appropriate block.]

(i) [ ]

(ii) [ ]

(j) Place of manufacture. (Does not apply unless the solicitation is predominantly for the acquisition of manufactured end products.) For statistical purposes only, the offeror shall indicate whether the place of manufacture of the end products it expects to provide in response to this solicitation is predominantly-

(1) [ ] In the United States (Check this box if the total anticipated price of offered end products manufactured in the United States exceeds the total anticipated price of offered end products manufactured outside the United States); or

(2) [ ] Outside the United States.

(k) Certificates regarding exemptions from the application of the Service Contract Labor Standards (Certification by the offeror as to its compliance with respect to the contract also constitutes its certification as to compliance by its subcontractor if it subcontracts out the exempt services.) [The contracting officer is to check a box to indicate if paragraph (k)(1) or (k)(2) applies.]

(1) [ ] 22.1003-4(c)(1). The offeror [ ] does [ ] does not certify that-

(i) The items of equipment to be serviced under this contract are used regularly for other than Governmental purposes and are sold or traded by the offeror (or subcontractor in the case of an exempt subcontract) in substantial quantities to the general public in the course of normal business operations;

(ii) The services will be furnished at prices which are, or are based on, established catalog or market prices (see FAR 22.1003-4(c)(2)(ii)) for the maintenance, calibration, or repair of such equipment; and

(iii) The compensation (wage and fringe benefits) plan for all service employees performing work under the contract will be the same as that used for these employees and equivalent employees servicing the same equipment of commercial customers.

(2) [ ] 22.1003-4(d)(1). The offeror [ ] does [ ] does not certify that-

(i) The services under the contract are offered and sold regularly to non-Governmental customers, and are provided by the offeror (or subcontractor in the case of an exempt subcontract) to the general public in substantial quantities in the course of normal business operations;

(ii) The contract services will be furnished at prices that are, or are based on, established

catalog or market prices (see FAR 22.1003-4(d)(2)(iii));

(iii) Each service employee who will perform the services under the contract will spend only a small portion of his or her time (a monthly average of less than 20 percent of the available hours on an annualized basis, or less than 20 percent of available hours during the contract period if the contract period is less than a month) servicing the Government contract; and

(iv) The compensation (wage and fringe benefits) plan for all service employees performing work under the contract is the same as that used for these employees and equivalent employees servicing commercial customers.

(3) If paragraph (k)(1) or (k)(2) of this clause applies-

(i) If the offeror does not certify to the conditions in paragraph (k)(1) or (k)(2) and the Contracting Officer did not attach a Service Contract Labor Standards wage determination to the solicitation, the offeror shall notify the Contracting Officer as soon as possible; and

(ii) The Contracting Officer may not make an award to the offeror if the offeror fails to execute the certification in paragraph (k)(1) or (k)(2) of this clause or to contact the Contracting Officer as required in paragraph (k)(3)(i) of this clause.

(l) Taxpayer Identification Number (TIN) (26 U.S.C. 6109, 31 U.S.C. 7701). (Not applicable if the offeror is required to provide this information to the SAM to be eligible for award.)

(1) All offerors must submit the information required in paragraphs (l)(3) through (l)(5) of this provision to comply with debt collection requirements of 31 U.S.C. 7701(c) and 3325(d), reporting requirements of 26 U.S.C. 6041, 6041A, and 6050M, and implementing regulations issued by the Internal Revenue Service (IRS).

(2) The TIN may be used by the Government to collect and report on any delinquent amounts arising out of the offeror's relationship with the Government (31 U.S.C. 7701(c)(3)). If the resulting contract is subject to the payment reporting requirements described in FAR 4.904, the TIN provided hereunder may be matched with IRS records to verify the accuracy of the offeror's TIN.

(3) Taxpayer Identification Number (TIN).

[ ]TIN: ____.

[ ]TIN has been applied for.

[ ]TIN is not required because:

[ ]Offeror is a nonresident alien, foreign corporation, or foreign partnership that does not have income effectively connected with the conduct of a trade or business in the United States and does not have an office or place of business or a fiscal paying agent in the United States;

[ ]Offeror is an agency or instrumentality of a foreign government;

[ ]Offeror is an agency or instrumentality of the Federal Government.

(4) Type of organization.

[ ]Sole proprietorship;

[ ]Partnership;

[ ]Corporate entity (not tax-exempt);

[ ]Corporate entity (tax-exempt);

[ ]Government entity (Federal, State, or local);

[ ]Foreign government;

[ ]International organization per 26 CFR1.6049-4;

[ ]Other ____.

(5) Common parent.

[ ]Offeror is not owned or controlled by a common parent;

[ ]Name and TIN of common parent:

Name ____.

TIN ____.

(m) Restricted business operations in Sudan. By submission of its offer, the offeror certifies that the offeror does not conduct any restricted business operations in Sudan.

(n) Prohibition on Contracting with Inverted Domestic Corporations.

(1) Government agencies are not permitted to use appropriated (or otherwise made available)

funds for contracts with either an inverted domestic corporation, or a subsidiary of an inverted domestic corporation, unless the exception at 9.108-2(b) applies or the requirement is waived in accordance with the procedures at 9.108-4.

(2) Representation. The Offeror represents that-

(i) It [ ] is, [ ] is not an inverted domestic corporation; and

(ii) It [ ] is, [ ] is not a subsidiary of an inverted domestic corporation.

(o) Prohibition on contracting with entities engaging in certain activities or transactions relating to Iran.

(1) The offeror shall e-mail questions concerning sensitive technology to the Department of State at CISADA106@state.gov.

(2) Representation and Certifications. Unless a waiver is granted or an exception applies as provided in paragraph (o)(3) of this provision, by submission of its offer, the offeror-

(i) Represents, to the best of its knowledge and belief, that the offeror does not export any sensitive technology to the government of Iran or any entities or individuals owned or controlled by, or acting on behalf or at the direction of, the government of Iran;

(ii) Certifies that the offeror, or any person owned or controlled by the offeror, does not engage in any activities for which sanctions may be imposed under section 5 of the Iran Sanctions Act; and

(iii) Certifies that the offeror, and any person owned or controlled by the offeror, does not knowingly engage in any transaction that exceeds the threshold at FAR 25.703-2(a)(2) with Iran's Revolutionary Guard Corps or any of its officials, agents, or affiliates, the property and interests in property of which are blocked pursuant to the International Emergency Economic Powers Act (et seq.) (see OFAC's Specially Designated Nationals and Blocked Persons List at https://www.treasury.gov/resource-center/sanctions/SDN-List/Pages/default.aspx).

(3) The representation and certification requirements of paragraph (o)(2) of this provision do not apply if-

(i) This solicitation includes a trade agreements certification (e.g., 52.212-3(g) or a comparable agency provision); and

(ii) The offeror has certified that all the offered products to be supplied are designated country end products.

(p) Ownership or Control of Offeror. (Applies in all solicitations when there is a requirement to be registered in SAM or a requirement to have a unique entity identifier in the solicitation).

(1) The Offeror represents that it [ ] has or [ ] does not have an immediate owner. If the Offeror has more than one immediate owner (such as a joint venture), then the Offeror shall respond to paragraph (2) and if applicable, paragraph (3) of this provision for each participant in the joint venture.

(2) If the Offeror indicates "has" in paragraph (p)(1) of this provision, enter the following information:

Immediate owner CAGE code: ____.

Immediate owner legal name: ____.

(Do not use a "doing business as" name)

Is the immediate owner owned or controlled by another entity: [ ] Yes or [ ] No.

(3) If the Offeror indicates "yes" in paragraph (p)(2) of this provision, indicating that the immediate owner is owned or controlled by another entity, then enter the following information:

Highest-level owner CAGE code: ____.

Highest-level owner legal name: ____.

(Do not use a "doing business as" name)

(q) Representation by Corporations Regarding Delinquent Tax Liability or a Felony Conviction under any Federal Law.

(1) As required by sections 744 and 745 of Division E of the Consolidated and Further Continuing Appropriations Act, 2015 (Pub. L. 113-235), and similar provisions, if contained in

subsequent appropriations acts, The Government will not enter into a contract with any corporation that-

(i) Has any unpaid Federal tax liability that has been assessed, for which all judicial and administrative remedies have been exhausted or have lapsed, and that is not being paid in a timely manner pursuant to an agreement with the authority responsible for collecting the tax liability, where the awarding agency is aware of the unpaid tax liability, unless an agency has considered suspension or debarment of the corporation and made a determination that suspension or debarment is not necessary to protect the interests of the Government; or

(ii) Was convicted of a felony criminal violation under any Federal law within the preceding 24 months, where the awarding agency is aware of the conviction, unless an agency has considered suspension or debarment of the corporation and made a determination that this action is not necessary to protect the interests of the Government.

(2) The Offeror represents that-

(i) It is [ ] is not [ ] a corporation that has any unpaid Federal tax liability that has been assessed, for which all judicial and administrative remedies have been exhausted or have lapsed, and that is not being paid in a timely manner pursuant to an agreement with the authority responsible for collecting the tax liability; and

(ii) It is [ ] is not [ ] a corporation that was convicted of a felony criminal violation under a Federal law within the preceding 24 months.

(r) Predecessor of Offeror. (Applies in all solicitations that include the provision at 52.204-16, Commercial and Government Entity Code Reporting.)

(1) The Offeror represents that it [ ] is or [ ] is not a successor to a predecessor that held a Federal contract or grant within the last three years.

(2) If the Offeror has indicated "is" in paragraph (r)(1) of this provision, enter the following information for all predecessors that held a Federal contract or grant within the last three years (if more than one predecessor, list in reverse chronological order):

Predecessor CAGE code: ____(or mark "Unknown").

Predecessor legal name:____.

(Do not use a "doing business as" name).

(s) [Reserved]

(t) [Reserved]

(u)

(1) In accordance with section 743 of Division E, Title VII, of the Consolidated and Further Continuing Appropriations Act, 2015 (Pub. L. 113-235) and its successor provisions in subsequent appropriations acts (and as extended in continuing resolutions), Government agencies are not permitted to use appropriated (or otherwise made available) funds for contracts with an entity that requires employees or subcontractors of such entity seeking to report waste, fraud, or abuse to sign internal confidentiality agreements or statements prohibiting or otherwise restricting such employees or subcontractors from lawfully reporting such waste, fraud, or abuse to a designated investigative or law enforcement representative of a Federal department or agency authorized to receive such information.

(2) The prohibition in paragraph (u)(1) of this provision does not contravene requirements applicable to Standard Form 312 (Classified Information Nondisclosure Agreement), Form 4414 (Sensitive Compartmented Information Nondisclosure Agreement), or any other form issued by a Federal department or agency governing the nondisclosure of classified information.

(3) Representation. By submission of its offer, the Offeror represents that it will not require its employees or subcontractors to sign or comply with internal confidentiality agreements or statements prohibiting or otherwise restricting such employees or subcontractors from lawfully reporting waste, fraud, or abuse related to the performance of a Government contract to a designated investigative or law enforcement representative of a Federal department or agency authorized to receive such information (e.g., agency Office of the Inspector General).

(v) Covered Telecommunications Equipment or Services-Representation. Section 889(a)(1)(A) and section 889 (a)(1)(B) of Public Law 115-232.

(1) The Offeror shall review the list of excluded parties in the System for Award Management (SAM) (https://www.sam.gov) for entities excluded from receiving federal awards for "covered telecommunications equipment or services".

(2) The Offeror represents that-

(i) It [ ] does, [ ] does not provide covered telecommunications equipment or services as a part of its offered products or services to the Government in the performance of any contract, subcontract, or other contractual instrument.

(ii) After conducting a reasonable inquiry for purposes of this representation, that it [ ] does, [ ] does not use covered telecommunications equipment or services, or any equipment, system, or service that uses covered telecommunications equipment or services.

(End of Provision)

Addendum to Solicitation Provisions

FAR Provisions Incorporated by Reference

Number	Title	Effective Date	Alternate Deviation	Variation Effective Date
52.203-18	Prohibition on Contracting with Entities that Require Certain Internal Confidentiality Agreements or Statements-Representation.	2017-01		
52.217-5	Evaluation of Options. (Deviation)	2026-02		

FAR Provisions Incorporated by Full Text

Number	Title	Effective Date	Alternate Deviation	Variation Effective Date
52.229-11	Tax on Certain Foreign Procurements-Notice and Representation.	2020-06		

Tax on Certain Foreign Procurements-Notice and Representation (Jun 2020)

(a) Definitions. As used in this provision-

Foreign person means any person other than a United States person.

Specified Federal procurement payment means any payment made pursuant to a contract with a foreign contracting party that is for goods, manufactured or produced, or services provided in a foreign country that is not a party to an international procurement agreement with the United States. For purposes of the prior sentence, a foreign country does not include an outlying area

of the United States.

United States person as defined in 26 U.S.C. 7701(a)(30) means

(1) A citizen or resident of the United States;

(2) A domestic partnership;

(3) A domestic corporation;

(4) Any estate (other than a foreign estate, within the meaning of 26 U.S.C. 701(a)(31)); and

(5) Any trust if-

(i) A court within the United States is able to exercise primary supervision over the administration of the trust; and

(ii) One or more United States persons have the authority to control all substantial decisions of the trust.

(b) Unless exempted, there is a 2 percent tax of the amount of a specified Federal procurement payment on any foreign person receiving such payment. See 26 U.S.C. 5000C and its implementing regulations at 26 CFR 1.5000C-1 through 1.5000C-7.

(c) Exemptions from withholding under this provision are described at 26 CFR 1.5000C-1(d)(5) through (7). The Offeror may claim an exemption from the withholding by using the Department of the Treasury Internal Revenue Service (IRS) Form W-14, Certificate of Foreign Contracting Party Receiving Federal Procurement Payments, available at www.irs.gov/w14. Any exemption claimed and self-certified on the IRS Form W-14 is subject to audit by the IRS. Any disputes regarding the imposition and collection of the 26 U.S.C. 5000C tax are adjudicated by the IRS as the 26 U.S.C. 5000C tax is a tax matter, not a contract issue. The IRS Form W-14 is provided to the acquiring agency rather than to the IRS.

(d) For purposes of withholding under 26 U.S.C. 5000C, the Offeror represents that

(1) It [ ] is [ ] is not a foreign person; and

(2) If the Offeror indicates "is" in paragraph (d)(1) of this provision, then the Offeror represents that-I am claiming on the IRS Form W-14 [ ] a full exemption, or [ ] partial or no exemption

[Offeror must select one] from the excise tax.

(e) If the Offeror represents it is a foreign person in paragraph (d)(1) of this provision, then-

(1) The clause at FAR 52.229-12, Tax on Certain Foreign Procurements, will be included in any resulting contract; and

(2) The Offeror shall submit with its offer the IRS Form W-14. If the IRS Form W-14 is not submitted with the offer, exemptions will not be applied to any resulting contract and the Government will withhold a full 2 percent of each payment.

(f) If the Offeror selects "is" in paragraph (d)(1) and "partial or no exemption" in paragraph (d)(2) of this provision, the Offeror will be subject to withholding in accordance with the clause at FAR 52.229-12, Tax on Certain Foreign Procurements, in any resulting contract.

(g) A taxpayer may, for a fee, seek advice from the IRS as to the proper tax treatment of a transaction. This is called a private letter ruling. Also, the IRS may publish a revenue ruling, which is an official interpretation by the IRS of the Internal Revenue Code, related statutes, tax treaties, and regulations. A revenue ruling is the conclusion of the IRS on how the law is applied to a specific set of facts. For questions relating to the interpretation of the IRS regulations go to https://www.irs.gov/help/tax-law-questions.

(End of provision)