USU- BUILDING 76E ROOF GARDEN

FINAL DESIGN SUBMISSION - JUNE 28, 2023

UNIFORMED SERVICES UNIVERSITY OF THE HEALTH SCIENCES, BETHESDA, MD.

VICINITY MAP (NTS)

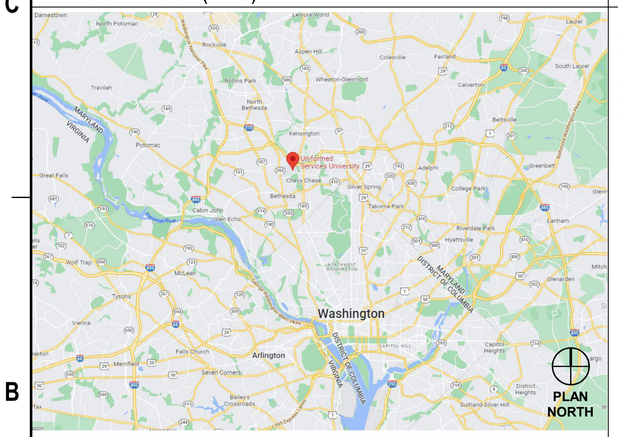

LOCATION MAP (NTS)

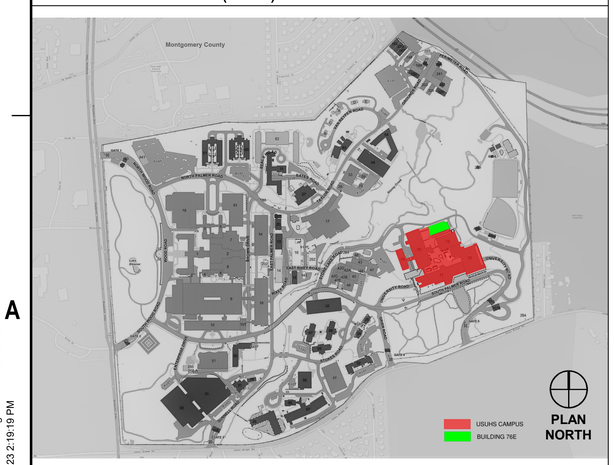

NAVAL FACILITIES ENGINEERING COMMAND (NAVFAC)

UNIFORMED SERVICES UNIVERSITY OF THE HEALTH SERVICES BETHESDA, MD

1. ARCHITECT:

MTFA ARCHITECTURE INC.
3200 LANGSTON BOULEVARD
ARLINGTON, VA 22207

2. STRUCTURAL ENGINEER:

MCMULLAN CONSULTING ENGINEERS
11800 SUNRISE VALLEY DR., SUITE 430
RESTON, VA 20191

3. MECHANICAL, ELECTRICAL, PLUMBING AND FIRE PROTECTION / LIFE SAFETY:

SUMMER CONSULTANTS, INC.
7900 WESTPARK DRIVE, SUITE A405
MCLEAN, VA 22102

4. LANDSCAPE:

OEHME, VAN SWEDEN
800 G STREET SE,
WASHINGTON D.C. 20003

5. HAZARDOUS MATERIALS:

TIDEWATER, INC.
6625 SELNICK DRIVE, SUITE A
ELKRIDGE, MD 21075

6. COST ESTIMATOR:

RIB U.S. COST
241 GARRISONVILLE RD., SUITE 202
STAFFORD, VA 22554

DRAWING INDEX

SHEET #	SHEET_NO	NAVFAC_NO	SHEET NAME
01-General			
G-001	1	13148358	COVER SHEET
G-002	2	13148359	GENERAL NOTES, ABBREVIATIONS AND SYMBOLS
G-003	3	13148360	PHASING PLANS
02-Life Safety			
GI001	4	13148361	BUILDING CODE SUMMARY
GI101	5	13148362	FIRST FLOOR
GI102	6	13148363	SECOND FLOOR
03-Structural			
S-001	7	13148364	DESIGN NOTES
S-101	8	13148365	PARTIAL LEVEL 2 (ROOF) FRAMING PLAN
S-501	9	13148366	SECTIONS AND DETAILS
S-502	10	13148367	SECTIONS AND DETAILS
S-503	11	13148368	EXISTING CONNECTION VERIFICATION DETAILS
04-Architectural			
AD101	12	13148369	LEVEL 1 DEMOLITION REFLECTED CEILING PLAN
AD102	13	13148370	LEVEL 2 DEMOLITION PLANS
AD301	14	13148371	SECTIONS - DEMO
A-101	15	13148372	OVERALL FLOOR PLAN - NEW WORK
A-102	16	13148373	LEVEL 2 - NEW WORK
A-103	17	13148374	LEVEL 2 - TRELLIS PLAN
A-111	18	13148375	LEVELS 1 & 2 RCP
A-301	19	13148376	SECTIONS
A-302	20	13148377	SECTIONS
A-501	21	13148378	DETAILS
A-502	22	13148379	DETAILS
A-503	23	13148380	RAMP PLANS AND DETAILS
A-601	24	13148381	DOOR SCHEDULE
A-701	25	13148382	RENDERED VIEWS
05-Fire Protection			
FX001	26	13148383	SYMBOLS AND ABBREVIATIONS
FD101	27	13148384	FIRST FLOOR - DEMOLITION
FD102	28	13148385	SECOND FLOOR
FX101	29	13148386	SECOND FLOOR
06-Mechanical			
M-001	30	13148387	SYMBOLS AND ABBREVIATIONS
MD101	31	13148388	MECHANICAL DEMO
M-101	32	13148389	MECHANICAL
M-301	33	13148390	MECHANICAL SECTIONS
07-Electrical			
E-001	34	13148391	SYMBOLS AND ABBREVIATIONS
ED101	35	13148392	ELECTRICAL DEMO
ED102	36	13148393	FLOOR PLANS - POWER - DEMOLITION
E-101	37	13148394	FLOOR PLANS - ELECTRICAL
E-102	38	13148395	FLOOR PLANS - POWER
08-Fire Alarm			
FA001	39	13148396	SYMBOLS AND ABBREVIATIONS
FD111	40	13148397	FIRST FLOOR - DEMOLITION
FD112	41	13148398	SECOND FLOOR
FA101	42	13148399	FIRST FLOOR
FA102	43	13148400	SECOND FLOOR
09-Landscape			
L-101	44	13148401	SOILS AND GRADING
L-102	45	13148402	PLANTING PLAN
L-201	46	13148403	PLANTING DETAILS
L-301	47	13148404	IRRIGATION PLAN
L-302	48	13148458	IRRIGATION DETAILS
L-303	49	13148459	IRRIGATION DETAILS

SYM	DESCRIPTION	DATE	APPR
	Final Design Submission	06/28/2023	

PROFESSIONAL CERTIFICATION. I CERTIFY THAT THESE DOCUMENTS WERE PREPARED OR APPROVED BY ME AND THAT I AM A DULY LICENSED ARCHITECT UNDER THE LAWS OF THE STATE OF MARYLAND, LICENSE NUMBER 9635, EXPIRATION DATE 8/15/23.

6/28/23

SEAL

MTFA architecture
3200 LANGSTON BOULEVARD, ARLINGTON, VA 22207
(703) 524 - 6616 www.mtfa.net

A/E INFO

APPROVED

FOR COMMANDER NAVFAC

ACTIVITY

FINAL DESIGN SUBMISSION

SATISFACTORY TO DATE

DES MJB | DRW CBM | CHK BB

PMDM

BRANCH MANAGER

CHIEF ENG/ARCH

FIRE PROTECTION

DEPARTMENT OF THE NAVY
NAVAL FACILITIES ENGINEERING SYSTEMS COMMAND
PUBLIC WORKS DEPARTMENT BETHESDA

NAVAL FACILITIES ENGINEERING SYSTEMS COMMAND ~ WASHINGTON
NAVAL SUPPORT ACTIVITY BETHESDA, MARYLAND

UNIFORMED SERVICES UNIVERSITY OF THE HEALTH SCIENCES BETHESDA, MD

Building 76E Roof Garden

COVER SHEET

SCALE: AS NOTED

EPROJECT NO.: 1698751

CONSTR. CONTR. NO.

NAVFAC DRAWING NO.
13148358

SHEET 1 OF 49

G-001

DRAWFORM REVISION: 25 AUGUST 2020

G-001 Final Design Submission 06/28/2023
6/28/2023 2:19:19 PM

GENERAL NOTES:

1. WORK MUST BE PERFORMED IN ACCORDANCE WITH RULES AND REGULATIONS OF GOVERNMENT AGENCIES HAVING JURISDICTION AND MUST CONFORM TO ALL ARCHITECTURAL BARRIERS ACT (ABA) AND THE AMERICANS WITH DISABILITIES AND ARCHITECTURAL BARRIERS ACT ACCESSIBILITY STANDARDS (ABAAS), NFPA, CITY, COUNTY, STATE, AND FEDERAL CONSTRUCTION, SAFETY, AND SANITARY LAW, CODES, STATUTES, AND ORDINANCES.
2. ALL CONTRACTORS MUST BE RESPONSIBLE FOR VISITING THE SITE AND EXAMINING EXISTING CONDITIONS PRIOR TO SUBMITTING A BID FOR THE WORK.
3. CONSTRUCTION OF WORK INDICATED ON THE DRAWINGS AS (N.I.C.) IS NOT IN CONTRACT.
4. WHERE SPECIFIC DIMENSIONS, DETAILS OR DESIGN INTENT CANNOT BE DETERMINED, CONSULT GOVERNMENT BEFORE PROCEEDING WITH THE WORK. TYPICAL DETAILS APPLY AT ALL SIMILAR CONDITIONS WHETHER CROSS REFERENCED OR NOT.
5. REQUIRED WORK OF A TRADE MAY BE AFFECTED BY INFORMATION ON OTHER TRADE SHEETS. ALL BIDS ARE BASED ON EXAMINATION OF A FULL SET OF DOCUMENTS. THE CONTRACTOR MUST COORDINATE THE WORK OF ALL TRADES AND SUBCONTRACTORS.
6. DIMENSION UNITS ARE IMPERIAL UNITS UNLESS NOTED OTHERWISE.
7. DIMENSIONS SHOWN ARE TO THE FINISHED FACE, CENTER-LINE OF DOOR OPENING AND COLUMN GRID LINES UNLESS NOTED OTHERWISE.
8. "VIF" OR ± INDICATED DIMENSIONS MUST BE FIELD VERIFIED. WHEN ACTUAL FIELD DIMENSIONS VARY IN SUCH A WAY THAT IT AFFECTS ELEMENTS WITHIN THE STRING, NOTIFY GOVERNMENT IMMEDIATELY.
9. DO NOT SCALE DRAWINGS. WHERE DIMENSIONS OR EXACT LOCATIONS ARE REQUIRED AND NOT INCLUDED ON THE DRAWINGS, REQUEST INFORMATION FROM GOVERNMENT.
10. THE INFORMATION CONTAINED HEREIN MAY REQUIRE ADJUSTMENT OR MODIFICATION TO CONFORM TO EXISTING CONDITIONS. IN CASES WHERE CHANGES IN DETAILS ARE NECESSARY, THESE DRAWINGS ARE USED TO SHOW ONLY THE DESIGN INTENT.
11. INSTALL MATERIALS, EQUIPMENT, HARDWARE, AND OTHER ELEMENTS IN STRICT COMPLIANCE WITH THE MANUFACTURER'S WRITTEN INSTRUCTIONS AND RECOMMENDATIONS. COORDINATE LOCATION OF CONCEALED SUPPORTS OR BLOCKING TO ENSURE PROPER INSTALLATION PRIOR TO CLOSING OF WALLS.
12. ALL DAMAGE TO EXISTING CONSTRUCTION AND PROPERTY BY THE CONTRACTOR MUST BE REPLACED AT THE CONTRACTOR'S EXPENSE WITH NEW MATERIALS TO MATCH EXISTING.
13. ELECTROLYTIC PROTECTION MUST BE PROVIDED BETWEEN DISSIMILAR METALS WHENEVER THE TWO ARE IN CONTACT.
14. OPEN EXTERIOR JOINTS AROUND WINDOW AND DOOR FRAMES, BETWEEN WALL PANELS, AT PENETRATIONS OF UTILITIES THROUGH THE BUILDING ENVELOPE MUST BE SEALED, FLASHED OR WEATHER-STRIPPED AS REQUIRED FOR COMPATIBILITY WITH ADJACENT MATERIALS TO ELIMINATE AIR LEAKAGE & WATER INFILTRATION.
15. A FULL AND COMPLETE JOB IS REQUIRED UNDER THIS CONTRACT. MATERIAL AND LABOR WHICH ARE RELATED TO THE WORK BUT NOT SPECIFICALLY INDICATED, AND WHICH ARE REQUIRED FOR A PROFESSIONALLY FINISHED JOB, MUST BE A PART OF THE WORK.
16. WORK IS TO BE PERFORMED IN A FULLY OCCUPIED BUILDING. PERIODS OF SYSTEM INTERRUPTIONS MUST BE APPROVED BY BUILDING MANAGEMENT AND MUST BE LIMITED TO OFF HOURS/DAYS. THE GOVERNMENT AND TENANT REQUIRE A 72 HOUR NOTIFICATION OF SYSTEM INTERRUPTIONS. SEE WORK RESTRICTION IN THE SPECIFICATIONS FOR ADDITIONAL REQUIREMENTS.
17. VERIFICATION & ADJUSTMENT OF LAYOUTS IS PART OF THE SCOPE OF WORK. PROVIDE CONFIRMATION OF ALL DIMENSIONS AND LAYOUT WITH THE GOVERNMENT PRIOR TO INSTALLATION OF SYSTEMS. THE CONTRACTOR IS RESPONSIBLE FOR ON-SITE VERIFICATION OF ALL FIELD CONDITIONS, QUANTITIES, AND DIMENSIONS PRIOR TO CONSTRUCTION.
18. THE CONTRACTOR IS RESPONSIBLE FOR PAYMENT OF ALL APPLICABLE PERMITS.
19. THE GENERAL NOTES AND TYPICAL DETAILS APPLY THROUGHOUT THE JOB UNLESS OTHERWISE NOTED OR SHOWN.
20. NO MATERIAL CUTTING OR FABRICATION OF ANY WORK WILL BEGIN UNTIL THE CONTRACTOR HAS RECEIVED WRITTEN AND/OR STAMPED APPROVAL (FROM THE GOVERNMENT) OF RELATED SHOP DRAWINGS AND MANUFACTURERS' SPECIFICATION DATA.
21. THE CONTRACTOR IS TO PROVIDE CLOSE OUT DOCUMENTATION UPON COMPLETION OF THE PROJECT TO THE TENANT. COORDINATE FINAL REQUIREMENTS WITH GOVERNMENT. GC TO PROVIDE ELECTRONIC AND HARD COPIES OF AS-BUILTS.
22. THE CONTRACTOR MUST MAINTAIN EMERGENCY EGRESS ACCESS AND ENSURE SECURITY OF THE SPACE AT ALL TIMES.
23. WORK MUST BE COMPLETED DURING TYPICAL OPERATION HOURS EXCEPT FOR SHUT DOWNS AND WORK INVOLVING NOISE OR ODORS AND WORK INVOLVING OTHER OCCUPIED FLOORS AND ADJACENT SPACES. WORK INVOLVING NOISE OR ODORS, AND WORK INVOLVING OTHER OCCUPIED FLOORS AND ADJACENT SPACES MUST BE DONE PRIOR TO 6:00AM AND/OR AFTER 6:00PM OR DURING WEEKENDS, UON. COORDINATION WITH THE GOVERNMENT IS REQUIRED.
24. COMPLETE SPECIFICATIONS ARE TO BE A PART OF THIS CONSTRUCTION DOCUMENT SUBMITTAL.
25. EXISTING FIRE SEPARATION WALLS AND THEIR RATINGS MUST BE MAINTAINED BETWEEN THE CONSTRUCTION AREA AND OCCUPIED AREAS. PROVIDE TEMPORARY FIRE BARRIERS AS REQUIRED.

HAZARDOUS MATERIALS:

1. A HAZARDOUS MATERIALS SURVEY ASSESSMENT HAS BEEN CONDUCTED FOR ASBESTOS-CONTAINING MATERIALS (ACM), LEAD-BASED PAINT (LBP) AND OTHER POTENTIALLY REGULATED MATERIALS. REFER TO THE USU-76 REVIEW ROOF DESIGN HAZARDOUS MATERIALS ASSESSMENT REPORT DATED NOVEMBER 1, 2022.
2. SUSPECT ASBESTOS-CONTAINING MATERIALS (ACM) ARE PRESENT IN THE DESIGNATED RENOVATION AREA. REFER TO THE USU-76 REVIEW ROOF DESIGN HAZARDOUS MATERIALS ASSESSMENT REPORT DATED NOVEMBER 1, 2022.
3. LEAD-BASED PAINT COATED COMPONENTS ARE NOT PRESENT IN THE DESIGNATED AREA. REFER TO THE USU-76 REVIEW ROOF DESIGN HAZARDOUS MATERIALS ASSESSMENT REPORT DATED NOVEMBER 1, 2022.
4. IF ASBESTOS ABATEMENT IS REQUIRED, ABATEMENT SHALL BE PERFORMED WITHIN A NEGATIVE PRESSURE ENCLOSURE (NPE) WITH AFFIXED DECONTAMINATION UNIT, USING PROPER ENGINEERING CONTROLS AND WORK PRACTICES IN COMPLIANCE WITH FEDERAL, STATE AND LOCAL REGULATIONS DETAILED IN THE SPECIFICATION SECTION 020850– ASBESTOS ABTEMENT PROCEDURES.
5. LEAD REMEDIATION IS NOT ANTICIPATED DURING THIS RENOVATION. REFER TO THE SPECIFICATION SECTION 020900 – CONTROL OF LEAD-BASED PAINT FOR LEAD SAFE WORK PRACTICES TO BE FOLLOWED DURING DEMOLITION.
6. IF ADDITIONAL SUSPECT MATERIALS ARE UNCOVERED DURING RENOVATIONS, IN AREAS PREVIOUSLY NOT IDENTIFIED, ALL CONSTRUCTION ACTIVITIES SHALL CEASE AND BULK SAMPLING AND/OR XRF TESTING FOR LBP SHALL BE PERFORMED TO CONFIRM OR REFUTE THE PRESENCE OF ACM OR LBP.
7. FOR FLOURESCENT LAMP LIGHT FIXTURES AND OTHER REGULATED COMPONENTS THAT CONTAIN PCBs and MERCURY, REFER TO THE SPECIFICATION SECTION 020890 FOR SMALL PCB ITEMS AND MERCURY LAMPS.
8. HAZARDOUS MATERIAL NOTES ABOVE AND COORDINATING SPECIFICATIONS PROVIDED BY TIDEWATER, INC.

MATERIAL SYMBOLS:

CONCRETE
STEEL
BATT INSULATION
ENGINEERED FILL
RIGID INSULATION
SEALANT / CAULKING
WOOD BLOCKING
FINISH WOOD / HARD WOOD
CUT BLOCKING / SHIM
BRICK
CONCRETE MASONRY
GYPSUM

SCOPE OF WORK:

THE GENERAL SCOPE OF WORK INCLUDES, BUT IS NOT LIMITED TO, DEMOLITION OF EXISTING ROOFING, INTERIOR / EXTERIOR RENOVATIONS FOR A ROOF GARDEN ON THE 2ND FLOOR. THE RENOVATION INCLUDES A RAMP, ROOF ACCESS, VEGETATIVE ROOFING SYSTEM WITH WOOD PAVERS, STRUCTURAL STRENGTHENING, MECHANICAL PLUMBING, FIRE PROTECTION AND ELECTRICAL RELOCATION / UPGRADES TO SUPPORT THE ROOF GARDEN DESIGN.

DRAWING SYMBOLS:

1 / A101 — EXTERIOR ELEVATION REFERENCE
1 / A101 — BUILDING / WALL SECTION
1 / A101 — INTERIOR ELEVATION REFERENCE
1 / A101 — 1 / A101 — DETAILS
0 — COLUMN REFERENCE
1a — PARTITION TYPE
9'-0" — CEILING HEIGHT A.F.F.
ACT-1 — CEILING MATERIAL
SPOT ELEVATION
1 — REVISION
ROOM NAME / 101 — ROOM NAME & NUMBER
101 — DOOR NUMBER
W1a — WINDOW / LOUVER / GLASS TYPE
— KEY NOTE (First number indicates specification division)
VEW # / SHT # — DRAWING TITLE / SCALE — DRAWING TITLE
VEW # / REF SHT # # — DRAWING TITLE / SCALE — DRAWING TITLE BACK REFERENCED

ABBREVIATIONS:

AB	ANCHOR BOLT
ABV	ABOVE
ACC	ACCESS
ACOUS	ACOUSTICAL
ACP	ACOUSTICAL PANEL CEILING
AD	AREA DRAIN
ADJ	ADJUSTABLE
AFF	ABOVE FINISH FLOOR
AHU	AIR HANDLING UNIT
ALT	ALTERNATE
ALUM	ALUMINUM
ANC	ANCHORS
APPROX	APPROXIMATE
ARCH	ARCHITECT
AUTO	AUTOMATIC
AVG	AVERAGE
B	BATHROOM
BD	BEAD
BIT	BITUMINOUS
BLDG	BUILDING
BLK	BLOCK
BLKG	BLOCKING
BM	BEAM
BO	BY OWNER
BOT	BOTTOM
BRD	BOARD
BRKT	BRACKET
BSL	BUILDING SETBACK LINE
BSMT	BASEMENT
BU	BUILT UP
CAB	CABINET
CEM	CEMENT
CF	CUBIC FOOT (FEET)
CI	CAST IRON
CJ	CONTROL JOINT
CL, CLO	CLOSET
CLG	CEILING
CLL	CONTRACT LIMIT LINE
CLR	CLEAR
CMU	CONCRETE MASONRY UNIT
CNR	CORNER
CO	CLEAN OUT
COL	COLUMN
CONC	CONCRETE
CONST	CONSTRUCTION
CONT	CONTINUOUS
CPT	CARPET
CS	COURSES
CT	CERAMIC TILE
CTR	CENTER
CTSK	COUNTER SUNK
DBL	DOUBLE
DEPT	DEPARTMENT
DET	DETAIL
DF	DRINKING FOUNTAIN
DH	DOUBLE HUNG
DIA	DIAMETER
DIFF	DIFFUSER
DIM	DIMENSION
DISP	DISPENSER
DIV	DIVISION (DIVIDED)
DN	DOWN
DR	DOOR
DS	DOWN SPOUT
DW	DISHWASHER
DWGS	DRAWINGS
DWR	DRAWER
E	EAST
EA	EACH
EJ	EXPANSION JOINT
EL	ELEVATION
ELEC	ELECTRICAL
ELEV	ELEVATION
ENCL	ENCLOSURE
ENT	ENTRANCE
EQ	EQUAL
EQUIP	EQUIPMENT
ETR	EXISTING TO REMAIN
EWC	ELECTRIC WATER COOLER
EX	EXISTING
EXP	EXPANSION
FD	FLOOR DRAIN
FE(C)	FIRE EXTINGUISHER
FF	FINISHED FLOOR
FF&E	FIXTURE FURNITURE & EQUIPMENT
FG	FINISHED GRADE
FIN	FINISH
FL	FLOORING
FLEX	FLEXIBLE
FLSG	FLASHING
FLUOR	FLUORESCENT
FR	FRAME
FRPF	FIRE PROOFING
FRT	FIRE RETARDANT TREATED
FT	FOOT (FEET)
FTG	FOOTING
FUR	FURRING
FVC	FIVE VALVE CABINET
GA	GAUGE
GALV	GALVANIZED
GB	GYPSUM BOARD
GC	GENERAL CONTRACTOR
GL	GLASS
GR	GRADE
GWB	GYPSUM WALLBOARD
HB	HOSE BIB
HC	HOLLOW CORE
HD	HEAVY DUTY
HDWD	HARDWOOD
HDWR	HARDWARE
HM	HOLLOW METAL
HORIZ	HORIZONTAL
HP	HIGH POINT
HT	HEIGHT
HVAC	HEATING, VENT, AIR CONDITIONING
ID	INSIDE DIAMETER
IGU	INSULATED GLASS UNIT
INST	INSTALLATION
INSUL	INSULATION
INT	INTERIOR
JAN	JANITOR
JBE	JOIST BEARING ELEVATION
JST	JOIST
JT	JOINT
KD	KNOCK DOWN
KIT	KITCHEN
KO	KNOCK OUT
LAM	LAMINATED
LAV	LAVATORY
LIN	LINEAR
LP	LOWPOINT
LT	LIGHT
LW	LIGHTWEIGHT
MACH	MACHINE
MAINT	MAINTENANCE
MATL	MATERIAL
MAX	MAXIMUM
MB	MARKER BOARD
MDF	MEDIUM DENSITY FIBERBOARD
MECH	MECHANICAL
MEMB	MEMBRANE
MEP	MECHANICAL, ELECTRICAL, PLUMBING
MET, MTL	METAL
MEZZ	MEZZANINE
MFR	MANUFACTURER
MIN	MINIMUM
MISC	MISCELLANEOUS
MLDG	MOLDING
MO	MASONRY OPENING
MOD	MODIFIED
MTD	MOUNTED
N, NO	NORTH
NIC	NOT IN CONTRACT
NRC	NOISE REDUCTION COEFFICIENT
NTS	NOT TO SCALE
OA	OVERALL
OC	ON CENTER
OD	OUTSIDE DIAMETER
OFCI	OWNER FURNISHED / CONTRACTOR INSTALLED
OFF	OFFICE
OH	OVERHEAD
OP HD	OPPOSITE HAND
OPG	OPENING
OPP	OPPOSITE
P-LAM	PLASTIC LAMINATE
PAR	PARTIAL
PART	PARTITION
PED	PEDESTRIAN
PLX	PLEXIGLASS
PLYWD	PLYWOOD
PNL	PANEL
POL	POLISH (POLISHED)
PR	PAIR
PREFAB	PREFABRICATED
PSF	POUNDS PER SQUARE FOOT
PSI	POUNDS PER SQUARE INCH
PT	PAINT
PTD	PAINTED
QT	QUARRY TILE
QTY	QUANTITY
RAD	RADIUS
RCP	REFLECTED CEILING PLAN
RD	ROOF DRAIN
REF	REFERENCE
REF'G	REFRIGERATOR
REINF	REINFORCED (ING)
REQ	REQUIRED
RES	RESILIENT
REV	REVISE (REVISION)
RO	ROUGH OPENING
RTU	ROOF TOP UNIT
SC	SOLID CORE
SCHED	SCHEDULE
SCHWD	SOLID CORE WOOD DOOR
SECT	SECTION
SF	SQUARE FOOT (FEET)
SFPS	STRETCHED FABRIC PNL. SYS
SHR	SHOWER
SHT	SHEET
SIM	SIMILAR
SL	SLIDING
SQ	SQUARE
SS, S.STL.	STAINLESS STEEL
SSK	SERVICE SINK
STA	STATION
STC	SOUND TRANSMISSION CLASS
STD	STANDARD
STL	STEEL
STN	STAIN
STOR	STORAGE
STRUCT	STRUCTURAL
SUSP	SUSPENDED
SW	SWITCH
SYS	SYSTEM
T&G	TONGUE & GROOVE
T.O.STL	TOP OF STEEL
TB	TACK BOARD
TBR	TO BE REMOVED
TEL	TELEPHONE
TEMP	TEMPERED
THK	THICK
THR	THRESHOLD
TLT	TOILET
TO	TOP OF
TOS	TOP OF SLAB
TV	TELEVISION
TYP	TYPICAL
UL	UNDERWRITER'S LABORATORIES
UNF	UNFINISHED
UNO	UNLESS NOTIFIED (NOTED) OTHERWISE
UR	URINAL
UTL	UTILITY
VCT	VINYL COMPOSITE TILE
VERT	VERTICAL
VIF	VERIFY IN FIELD
W	WEST
W/	WITH
W/O	WITH OUT
WD	WOOD
WH	WATER HEATER
WP	WATERPROOFING
WR	WATER RESISTANT
WT	WEIGHT

SYM.	DESCRIPTION	DATE	APPR
	Final Design Submission	06/28/2023	

NAVFAC

PROFESSIONAL CERTIFICATION. I CERTIFY THAT THESE DOCUMENTS WERE PREPARED OR APPROVED BY ME AND THAT I AM A DULY LICENSED ARCHITECT UNDER THE LAWS OF THE STATE OF MARYLAND, LICENSE NUMBER 9635, EXPIRATION DATE 8/15/23.

6/28/23 SEAL

MTFA architecture
3200 LANGSTON BOULEVARD, ARLINGTON, VA 22207
(703) 524 - 8616 www.mtfa.net

A/E INFO

APPROVED

FOR COMMANDER NAVFAC

ACTIVITY: FINAL DESIGN SUBMISSION

SATISFACTORY TO DATE

DES MJB | DRW CBM | CHK BB

PM/DM

BRANCH MANAGER

CHIEF ENG/ARCH

FIRE PROTECTION

DEPARTMENT OF THE NAVY
NAVAL FACILITIES ENGINEERING SYSTEMS COMMAND
PUBLIC WORKS DEPARTMENT, BETHESDA

NAVAL FACILITIES ENGINEERING SYSTEMS COMMAND ~ WASHINGTON
NAVAL SUPPORT ACTIVITY BETHESDA, MARYLAND
BETHESDA, MD
UNIFORMED SERVICES UNIVERSITY OF THE HEALTH SCIENCES
Building 76E Roof Garden
GENERAL NOTES, ABBREVIATIONS AND SYMBOLS

SCALE: AS NOTED
EPROJECT NO.: 1698751
CONSTR. CONTR. NO.
NAVFAC DRAWING NO. 13148359
SHEET 2 OF 49
G-002

DRAWFORM REVISION: 25 AUGUST 2020

G-002 Final Design Submission 06/28/2023
6/28/2023 2:19:20 PM

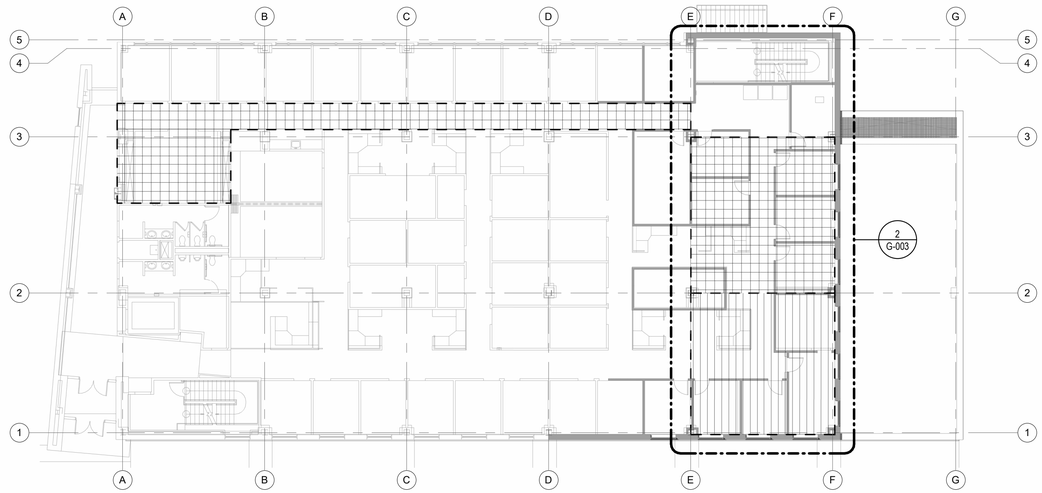

3 G-003 LEVEL 1 - OVERALL PHASING
SCALE: 1/16" = 1'-0"

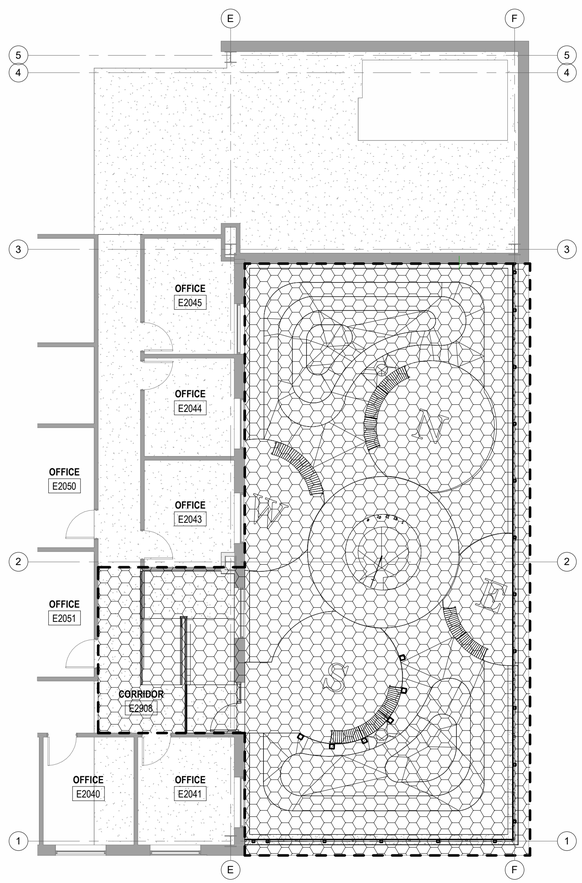

2 G-003 LEVEL 2 - PHASING PLAN
SCALE: 1/8" = 1'-0"

1 G-003 LEVEL 1 - ENLARGED PHASING PLAN
SCALE: 1/8" = 1'-0"

LEGEND (PHASING)

PHASE 1 - CONSTRUCTION

PHASE 2 - CONSTRUCTION

PHASE 3 - CONSTRUCTION

GENERAL NOTES (PHASING)

1. MAINTAIN CLEAR AND SAFE EGRESS FOR ALL OCCUPIED SPACES AND ADJACENT AREAS DURING PHASED CONSTRUCTION.
2. WORK IN GROUND FLOOR DETAIL 2/M-101 AND WORK ON FIRST FLOOR NORTH OF COLUMN LINE 2 SHALL OCCUR DURING PHASE 1. WORK ON FIRST FLOOR SOUTH OF COLUMN LINE 2 SHALL OCCUR DURING PHASE 2. WORK ON ROOF AND ON SECOND FLOOR SHALL OCCUR DURING PHASE 3.
3. WORK ON THE GROUND FLOOR COORIDOR BETWEEN COLUMNS A - E AND 3 - 4 SHALL BE COMPLETED DURING WEEKEND HOURS. EXISTING CEILING SYSTEM, GRID, LIGHTS AND ALL DEVICES TO REMAIN.

PLAN NORTH TRUE NORTH

0 8' 16' 32' 48'
1/16" = 1'-0"

0 4' 8' 16' 24'
1/8" = 1'-0"

SYM.	DESCRIPTION	DATE	APPR
	Final Design Submission	06/28/2023	

NAVFAC

PROFESSIONAL CERTIFICATION. I CERTIFY THAT THESE DOCUMENTS WERE PREPARED OR APPROVED BY ME AND THAT I AM A DULY LICENSED ARCHITECT UNDER THE LAWS OF THE STATE OF MARYLAND, LICENSE NUMBER 9635, EXPIRATION DATE 8/15/23.

6/28/23
SEAL

MTFA architecture
3200 LANGSTON BOULEVARD, ARLINGTON, VA 22207
(703) 524 - 8616 www.mtfa.net

A/E INFO

APPROVED

FOR COMMANDER NAVFAC

ACTIVITY
FINAL DESIGN SUBMISSION

SATISFACTORY TO DATE

DES MJB | DRW CBM | CHK BB

PM/DM

BRANCH MANAGER

CHIEF ENG/ARCH

FIRE PROTECTION

DEPARTMENT OF THE NAVY
NAVAL FACILITIES ENGINEERING SYSTEMS COMMAND ~ WASHINGTON
PUBLIC WORKS DEPARTMENT, BETHESDA
NAVAL FACILITIES ENGINEERING SYSTEMS COMMAND
NAVAL SUPPORT ACTIVITY BETHESDA, MARYLAND
UNIFORMED SERVICES UNIVERSITY OF THE HEALTH SCIENCES
BETHESDA, MD
Building 76E Roof Garden
PHASING PLANS

SCALE: AS NOTED
EPROJECT NO.: 1698751
CONSTR. CONTR. NO.
NAVFAC DRAWING NO. 13148360
SHEET 3 OF 49
G-003

DRAWFORM REVISION: 25 AUGUST 2020

G-003 Final Design Submission 06/28/2023
6/28/2023 2:19:26 PM

APPLICABLE CODES

1. UNIFIED FACILITIES CRITERIA (UFC)
   - 2022 UFC 1-200-01 DOD BUILDING CODE
   - 2021 UFC 3-600-01 CHANGE 6 FIRE PROTECTION ENGINEERING FOR FACILITIES
2. INTERNATIONAL CODE COUNCIL (ICC)
   - 2021 INTERNATIONAL BUILDING CODE (IBC)
   - 2021 INTERNATIONAL EXISTING BUILDING CODE (IEBC)
3. NATIONAL FIRE PROTECTION ASSOCIATION (NFPA)
   - 2021 NFPA 1 FIRE CODE
   - 2022 NFPA 10 STANDARD FOR PORTABLE FIRE EXTINGUISHERS
   - 2022 NFPA 13 STANDARD FOR THE INSTALLATION OF SPRINKLER SYSTEMS
   - 2023 NFPA 70 NATIONAL ELECTRICAL CODE
   - 2022 NFPA 72 NATIONAL FIRE ALARM AND SIGNALING CODE
   - 2021 NFPA 101 LIFE SAFETY CODE

MAJOR PROJECT

REQUIRED - PER UFC 3-600-01 SECTION 2-1.20, THE WORK FALLS UNDER MAJOR PROJECT REQUIREMENTS.
PROVIDED - THE MODIFICATION WILL MEET MAJOR PROJECT REQUIREMENTS.

EXISTING FACILITY

REQUIRED - THE BUILDING WILL MEET THE CRITERIA FOR NFPA 101 CHAPTER 43 FOR MODIFICATION WORK.
PROVIDED - ALL NEW WORK AND MATERIALS WILL MEET NEW CONSTRUCTION CRITERIA INCLUDING BUT NOT LIMITED TO IBC AND NFPA 101 CRITERIA. THE BUILDING WILL REMAIN OCCUPIED OUTSIDE AREA OF WORK. LIFE SAFETY SYSTEMS WILL REMAIN ACTIVE THROUGHOUT CONSTRUCTION.

CONSTRUCTION TYPE

REQUIRED - PER IBC SECTION 601, ALL BUILDINGS MUST BE ASSIGNED A TYPE OF CONSTRUCTION.
PROVIDED - THE FACILITY MOST CLOSELY RESEMBLES CONSTRUCTION TYPE IB IN ACCORDANCE WITH IBC CHAPTER 6.

OCCUPANCY USE

REQUIRED - NFPA 101 SECTION 6.1.14 ALLOWS MULTIPLE OCCUPANCIES TO BE TREATED AS MIXED USE NON-SEPARATED WHERE INCIDENTAL TO ANOTHER OCCUPANCY.
PROVIDED - THE FACILITY WILL BE TREATED AS A MIXED USE NON-SEPARATED OCCUPANCY TYPE.

OCCUPANCY CLASSIFICATIONS

IN ACCORDANCE WITH IBC CHAPTER 3 AND NFPA 101 CHAPTER 6.

1. BUSINESS / B
2. STORAGE / S-1
3. STORAGE / S-2
4. ASSEMBLY / A-3 - ONLY PRESENT ON GROUND FLOOR

BUILDING AREA

THE ALLOWABLE AREA PER FLOOR IS BASED ON IBC SECTION 506.

ALLOWABLE AREA PER FLOOR - 144,000 SQUARE FEET
FIRST FLOOR AREA - 13,144 SQUARE FEET
SECOND FLOOR AREA - 13,144 SQUARE FEET

OCCUPANCY	MULTIPLE FLOOR SPRINKLERED, ALLOWABLE AREA
STORAGE (S-1)	144,000

STORIES AND HEIGHT

THE ALLOWABLE BUILDING STORIES AND HEIGHT ARE BASED ON IBC CHAPTER 504.

ALLOWABLE BUILDING STORIES AND HEIGHT ABOVE GRADE - 12 STORIES | 180 FEET
ACTUAL BUILDING STORIES AND HEIGHT ABOVE GRADE - 2 STORIES | 43 FEET

STRUCTURAL FIRE RESISTANCE RATING

PER IBC TABLE 601, REQUIRED AND PROVIDED FIRE RESISTANCE TABLE.

COMPONENT		REQUIRED FIRE RESISTANCE	PROVIDED FIRE RESISTANCE
PRIMARY STRUCTURAL FRAME		2 HOUR	2 HOUR
BEARING WALLS	EXTERIOR	2 HOUR	2 HOUR
	INTERIOR	2 HOUR	2 HOUR
NONBEARING WALLS AND PARTITIONS	EXTERIOR	BY OTHER CRITERIA	BY OTHER CRITERIA
	INTERIOR	0 HOUR	0 HOUR
FLOOR CONSTRUCTION AND SECONDARY MEMBERS		2 HOUR	2 HOUR
ROOF CONSTRUCTION AND SECONDARY MEMBERS		1 HOUR	1 HOUR

REQUIRED OCCUPANCY SEPARATION - 0 HOUR
PROVIDED OCCUPANCY SEPARATION - 0 HOUR

EXTERIOR WALL FIRE RESISTANCE RATING

REQUIRED - PER IBC TABLE 705.5, EXTERIOR WALLS ARE REQUIRED TO HAVE A 1-HOUR FIRE RATING WHEN LESS THAN 30 FEET FROM ADJACENT BUILDINGS.
PROVIDED - THE SOUTH EXTERIOR WALL IS LESS THAN 30 FEET FROM BUILDING 73 D AND HAS A 1-HOUR FIRE RATING. ALL OTHER EXTERIOR WALLS ARE MORE THAN 30 FEET FROM THE CLOSEST BUILDING AND HAVE NO FIRE RATING.

OCCUPANT LOAD

OCCUPANCY CLASSIFICATION	OCCUPANCY USE GROUP	OCCUPANT LOAD FACTOR	COMMENTS	AREA	OCCUPANT LOAD
FIRST FLOOR					
BUSINESS	LESS CONCENTRATED	150 SF/PERSON	GROSS	11,720 SF	79
BUSINESS	TABLES AND CHAIRS	15 SF/PERSON		460 SF	31
STORAGE	IN NON STORAGE	500 SF/PERSON		964 SF	2
TOTAL				13,144 SF	112
SECOND FLOOR					
BUSINESS	TABLES AND CHAIRS	15 SF/PERSON	GROSS	709 SF	48
BUSINESS	COLLABORATION < 450 SF	30 SF/PERSON		785 SF	27
BUSINESS	LESS CONCENTRATED	150 SF/PERSON		11,811 SF	79
STORAGE	IN NON-STORAGE	500 SF/PERSON		624 SF	2
TOTAL				13,144 SF	156

EGRESS CAPACITY

THE FACILITY EGRESS CAPACITY FACTORS ARE:
- 0.2 INCHES/PERSON FOR LEVEL COMPONENTS.
- 0.3 INCHES/PERSON FOR STAIR COMPONENTS.

REQUIRED - EGRESS CAPACITY MUST BE ABLE TO SUPPORT OCCUPANT LOAD.
PROVIDED - EGRESS CAPACITY IS ADEQUATE TO SUPPORT OCCUPANT LOAD.

SEE LIFE SAFETY PLANS FOR EGRESS CAPACITY PER EXIT.

INTERIOR FINISH

REQUIRED INTERIOR FINISH - NFPA 101 CHAPTER 10

WALLS AND CEILINGS
1. BUSINESS - CLASS C MINIMUM

FLOORS
1. BUSINESS - CLASS II

PROVIDED INTERIOR FINISH
WALLS AND CEILINGS - CLASS C
FLOORS - CLASS II

BUILDING CODE AND LIFE SAFETY NARRATIVE

THE PROJECT ENTAILS THE ADDITION OF A ROOF GARDEN ON THE SECOND FLOOR OF USUHU BUILDING 76E. THE STRUCTURE UNDERNEATH THE PLANNED ROOF GARDEN WILL BE MODIFIED TO SUPPORT THE ADDITIONAL LOAD. PART OF THE PROJECT SCOPE OF WORK INCLUDES ALTERING ROOM E2042 ON THE SECOND FLOOR TO CREATE A RAMP OUT TO THE ROOF GARDEN.

MEANS OF EGRESS

REQUIRED # OF EXITS PER FLOOR - 2
PROVIDED # OF EXITS PER FLOOR - 2

REQUIRED ARRANGEMENT OF EGRESS			
OCCUPANCY	MAX ALLOWABLE TRAVEL DISTANCE	MAX ALLOWABLE COMMON PATH OF TRAVEL	MAX ALLOWABLE DEAD END
BUSINESS	300 FEET	100 FEET	50 FEET
STORAGE	400 FEET	100 FEET	100 FEET
ASSEMBLY	250 FEET	75 FEET	20 FEET

REQUIRED - TRAVEL DISTANCES MUST BE LESS THAN MOST STRICT REQUIREMENT (BUSINESS - ON 1ST AND 2ND FLOOR).
PROVIDED - TRAVEL DISTANCES ARE LESS THAN MOST STRICT REQUIREMENT (BUSINESS - ON 1ST AND 2ND FLOOR).

SEE LIFE SAFETY PLANS FOR LOCATIONS OF ACTUAL ARRANGEMENT OF EGRESS.

REQUIRED: EXIT REMOTENESS SHALL AT MINIMUM BE ONE THIRD OF THE LENGTH OF BUILDING DIAGONAL.
PROVIDED: EXITS ARE LOCATED MORE THAN $\frac{1}{3}$ OF THE BUILDINGS DIAGONAL APART.

FIRE PROTECTION SYSTEMS

REQUIRED - UFC REQUIRES FACILITIES TO BE PROTECTED WITH AN AUTOMATIC WET-PIPE SPRINKLER SYSTEM IN COMPLIANCE WITH NFPA 13 AND UFC 3-600-01.
PROVIDED - THE BUILDING IS PROTECTED WITH AN AUTOMATIC WET-PIPE SPRINKLER SYSTEM IN COMPLIANCE WITH NFPA 13 AND UFC 3-600-01.

REQUIRED - UFC REQUIRES A FIRE ALARM SYSTEM IN COMPLIANCE WITH NFPA 72 AND UFC 3-600-01 AND A MASS NOTIFICATION SYSTEM IN COMPLIANCE WITH UFC 4-021-01.
PROVIDED - THE BUILDING HAS A COMBINED ADDRESSABLE FIRE ALARM AND MASS NOTIFICATION SYSTEM INSTALLED IN COMPLIANCE WITH NFPA 72, UFC 3-600-01, AND UFC 4-021-01.

SYM	DESCRIPTION	DATE	APPR
	FINAL DESIGN SUBMISSION	06/28/2023	

NAVFAC

PROFESSIONAL CERTIFICATION. I CERTIFY THAT THESE DOCUMENTS WERE PREPARED OR APPROVED BY ME AND THAT I AM A DULY LICENSED ENGINEER UNDER THE LAWS OF THE STATE OF MARYLAND, LICENSE NUMBER 41681, EXPIRATION DATE 2/28/2024.

SEAL

MTFA architecture
3200 LEE HIGHWAY, ARLINGTON, VA 22207
(703) 524 - 6616 www.mtfa.net

SUMMER CONSULTANTS INCORPORATED
7900 Westpark Dr. | Suite A405 | McLean, VA 22102
(703) 556-8820 | www.summerconsultants.com
A/E INFO

APPROVED

FOR COMMANDER NAVFAC

ACTIVITY
FINAL DESIGN SUBMISSION

SATISFACTORY TO DATE

DES	EA	DRW	JL	CHK	AP

PM/DM
BRANCH MANAGER
CHIEF ENG/ARCH
FIRE PROTECTION

DEPARTMENT OF THE NAVY
NAVAL FACILITIES ENGINEERING SYSTEMS COMMAND
PUBLIC WORKS DEPARTMENT, BETHESDA
NAVAL FACILITIES ENGINEERING SYSTEMS COMMAND ~ WASHINGTON
NAVAL SUPPORT ACTIVITY BETHESDA, MARYLAND
BETHESDA, MD
UNIFORMED SERVICES UNIVERSITY OF THE HEALTH SCIENCES
Building 76E Roof Garden
BUILDING CODE SUMMARY

SCALE: AS NOTED
EPROJECT NO.: 1698751
CONSTR. CONTR. NO.
NAVFAC DRAWING NO. 13148361
SHEET 4 OF 49
GI001

DRAWFORM REVISION: 25 AUGUST 2020

FILE NAME: 171.43 GI001.DWG
OUR REF: 171.43
PLOT DATE: 6/20/2023 11:10:09 AM

USE AND OCCUPANT LOAD FACTORS

- BUSINESS USE - TABLES AND CHAIRS
- BUSINESS USE - LESS CONCENTRATED
- STORAGE USE - IN NON-STORAGE

OCCUPANT LOAD - 1ST FLOOR

OCCUPANCY CLASSIFICATION	OCCUPANCY USE GROUP	OCCUPANT LOAD FACTOR	AREA	OCCUPANT LOAD
BUSINESS	TABLES AND CHAIRS	15 SF/PERSON	460 SF	31
BUSINESS	LESS CONCENTRATED	150 SF/PERSON	11,720 SF	79
STORAGE	IN NON-STORAGE	500 SF/PERSON	964 SF	2
TOTAL			13,144 SF	112

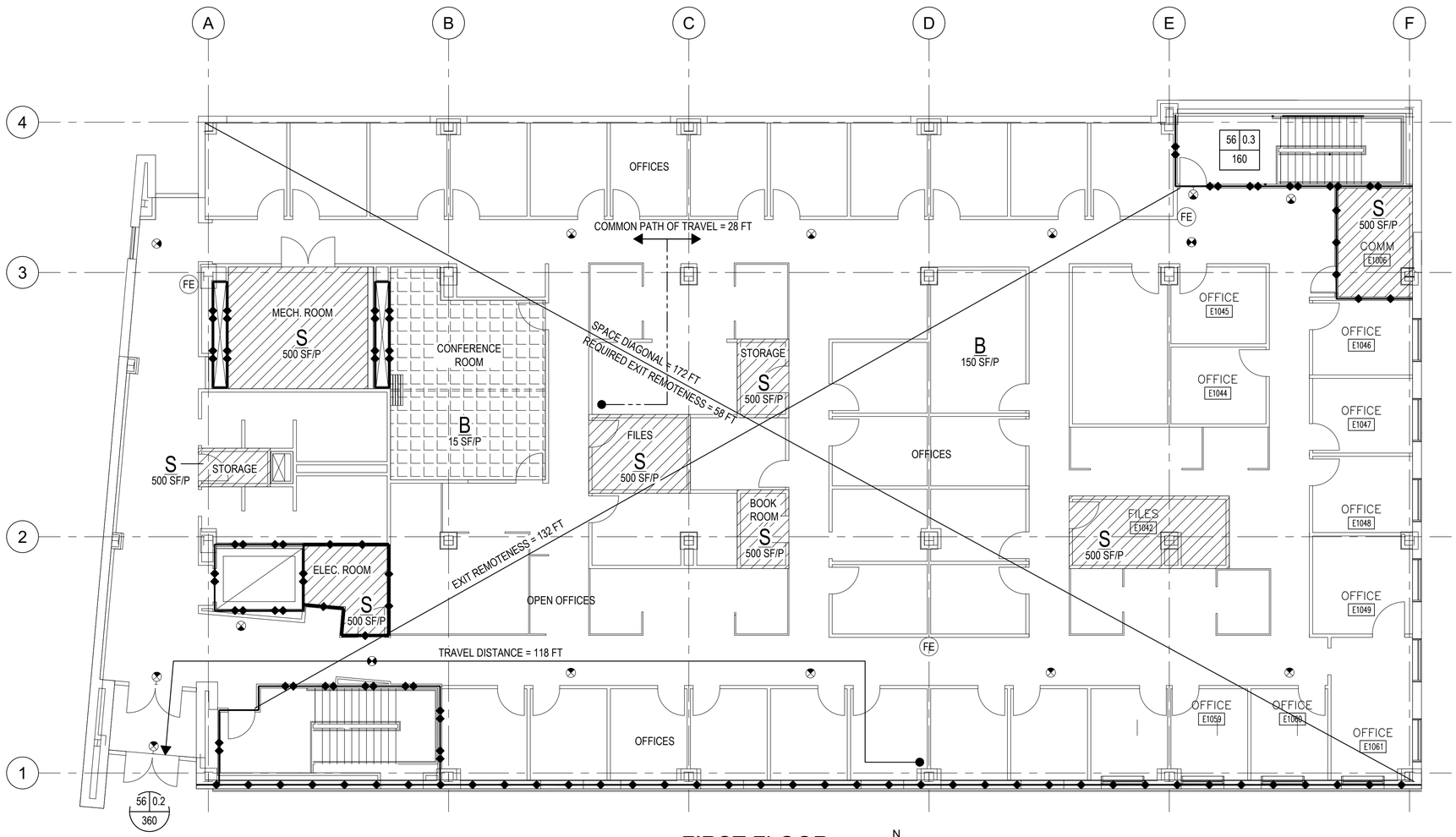

1 FIRST FLOOR
1/8"=1'-0"
0 8' 16'
N

LIFE SAFETY LEGEND

- A — OCCUPANCY USE
- 15 SF/P — OCCUPANT LOAD FACTOR (OLF) SQUARE FEET/ PERSON
- 200 | 0.3 / 200 — NUMBER OF OCCUPANTS USING EXIT STAIR; EGRESS WIDTH CAPACITY FACTOR; MAXIMUM NUMBER OF OCCUPANTS EGRESS WIDTH CAN SUPPORT
- 200 | 0.3 / 200 — NUMBER OF OCCUPANTS USING EXIT DOOR; EGRESS WIDTH CAPACITY FACTOR; MAXIMUM NUMBER OF OCCUPANTS EGRESS WIDTH CAN SUPPORT
- 2 HOUR FIRE BARRIER
- 1 HOUR FIRE BARRIER
- DEAD END
- COMMON PATH OF TRAVEL
- MAXIMUM TRAVEL DISTANCE
- FE — PORTABLE FIRE EXTINGUISHER
- EXIT SIGN

SYM	DESCRIPTION	DATE	APPR
	FINAL DESIGN SUBMISSION	06/28/2023	

NAVFAC

PROFESSIONAL CERTIFICATION. I CERTIFY THAT THESE DOCUMENTS WERE PREPARED OR APPROVED BY ME AND THAT I AM A DULY LICENSED ENGINEER UNDER THE LAWS OF THE STATE OF MARYLAND, LICENSE NUMBER 41981, EXPIRATION DATE 2/28/2024.

STATE OF MARYLAND · EDWARD A. ARCHER · No. 41981 · PROFESSIONAL ENGINEER

SEAL

MTFA architecture
3200 LEE HIGHWAY, ARLINGTON, VA 22207
(703) 524 - 6616 www.mtfa.net

SUMMER CONSULTANTS INCORPORATED
7900 Westpark Dr. | Suite A405 | McLean, VA 22102
(703) 556-8820 | www.summerconsultants.com
A/E INFO

APPROVED

FOR COMMANDER NAVFAC

ACTIVITY
FINAL DESIGN SUBMISSION

SATISFACTORY TO DATE

DES EA DRW JL CHK AP

PM/DM

BRANCH MANAGER

CHIEF ENG/ARCH

FIRE PROTECTION

DEPARTMENT OF THE NAVY
NAVAL FACILITIES ENGINEERING SYSTEMS COMMAND
PUBLIC WORKS DEPARTMENT, BETHESDA

NAVAL FACILITIES ENGINEERING SYSTEMS COMMAND ~ WASHINGTON
NAVAL SUPPORT ACTIVITY BETHESDA, MARYLAND

UNIFORMED SERVICES UNIVERSITY OF THE HEALTH SCIENCES
BETHESDA, MD

Building 76E Roof Garden

FIRST FLOOR

SCALE: AS NOTED

EPROJECT NO.: 1698751

CONSTR. CONTR. NO.

NAVFAC DRAWING NO.
13148362

SHEET 5 OF 49

GI101

DRAWFORM REVISION: 25 AUGUST 2020

FILE NAME: 171.43 GI101.DWG
OUR REF: 171.43
PLOT DATE: 6/20/2023 11:10:17 AM

USE AND OCCUPANT LOAD FACTORS

- BUSINESS USE - TABLES AND CHAIRS
- BUSINESS USE - LESS CONCENTRATED
- BUSINESS USE - LESS CONCENTRATED
- STORAGE USE - IN NON-STORAGE

OCCUPANT LOAD - 2ND FLOOR

OCCUPANCY CLASSIFICATION	OCCUPANCY USE GROUP	OCCUPANT LOAD FACTOR	AREA	OCCUPANT LOAD
BUSINESS	TABLES AND CHAIRS	15 SF/PERSON	709 SF	48
BUSINESS	COLLABORATION < 450 SF	30 SF/PERSON	785 SF	27
BUSINESS	LESS CONCENTRATED	150 SF/PERSON	11,811 SF	79
STORAGE	IN NON-STORAGE	500 SF/PERSON	624 SF	2
TOTAL			13,144 SF	156

NOTES

1. PROVIDE POSTED SIGNAGE OF 49 MAXIMUM ALLOWABLE OCCUPANTS.

LIFE SAFETY LEGEND

- A — OCCUPANCY USE
- 15 SF/P — OCCUPANT LOAD FACTOR (OLF) SQUARE FEET/ PERSON
- NUMBER OF OCCUPANTS USING EXIT STAIR
- EGRESS WIDTH CAPACITY FACTOR
- 200 | 0.3 / 200 — MAXIMUM NUMBER OF OCCUPANTS EGRESS WIDTH CAN SUPPORT
- 2 HOUR FIRE BARRIER
- 1 HOUR FIRE BARRIER
- DEAD END
- COMMON PATH OF TRAVEL
- MAXIMUM TRAVEL DISTANCE
- FE — PORTABLE FIRE EXTINGUISHER
- EXIT SIGN

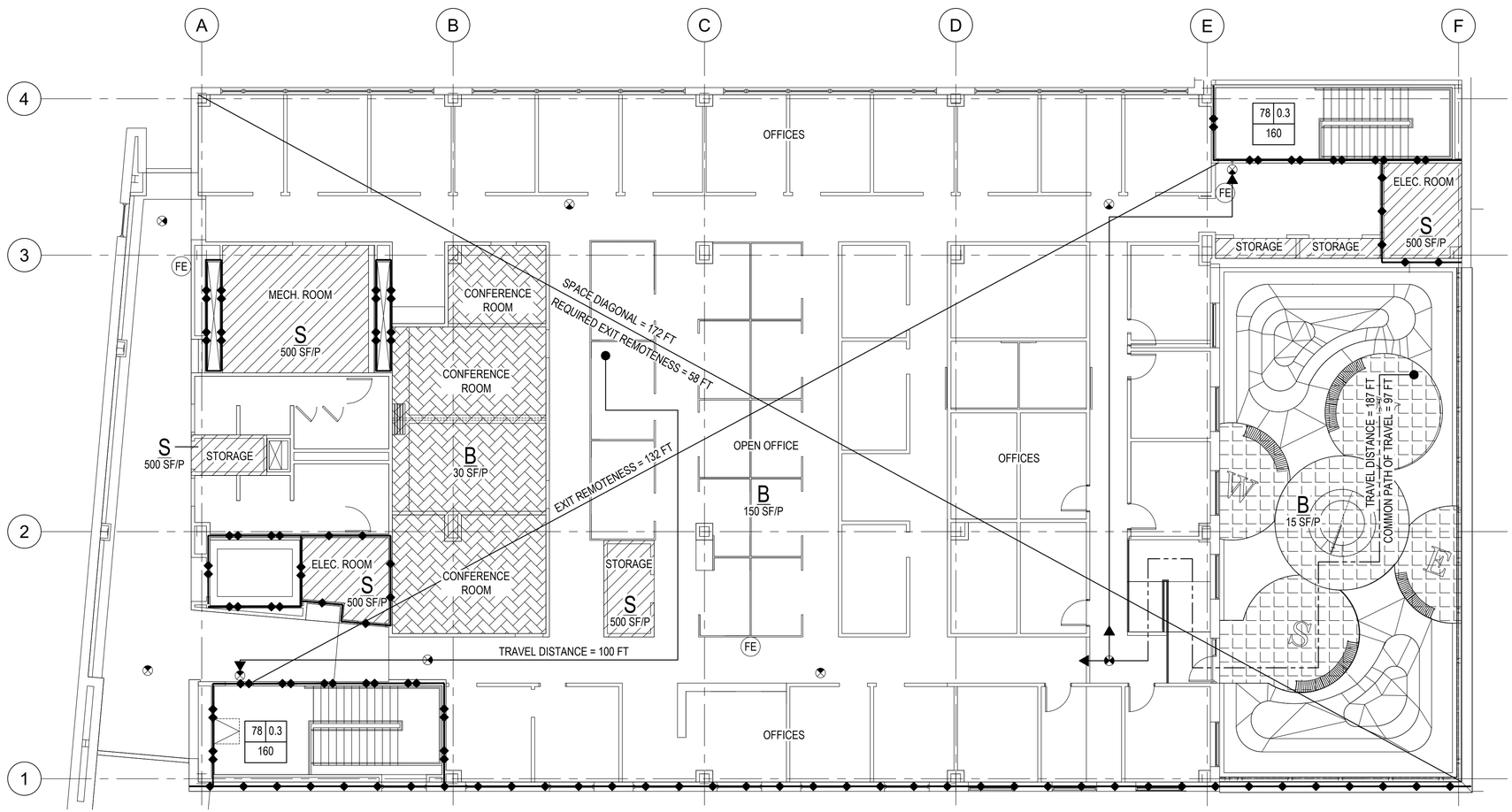

1 SECOND FLOOR
1/8"=1'-0"
0 8' 16'
N

SYM	DESCRIPTION	DATE	APPR
	FINAL DESIGN SUBMISSION	06/28/2023	

NAVFAC

PROFESSIONAL CERTIFICATION. I CERTIFY THAT THESE DOCUMENTS WERE PREPARED OR APPROVED BY ME AND THAT I AM A DULY LICENSED ENGINEER UNDER THE LAWS OF THE STATE OF MARYLAND, LICENSE NUMBER 41681, EXPIRATION DATE 2/28/2024.

SEAL

MTFA architecture
3200 LEE HIGHWAY, ARLINGTON, VA 22207
(703) 524 - 6616 www.mtfa.net

SUMMER CONSULTANTS INCORPORATED
7900 Westpark Dr. | Suite A405 | Mclean, VA 22102
(703) 556-8820 | www.summerconsultants.com
A/E INFO

APPROVED

FOR COMMANDER NAVFAC

ACTIVITY: FINAL DESIGN SUBMISSION

SATISFACTORY TO DATE

DES	EA	DRW	JL	CHK	AP

PM/DM

BRANCH MANAGER

CHIEF ENG/ARCH

FIRE PROTECTION

DEPARTMENT OF THE NAVY
NAVAL FACILITIES ENGINEERING SYSTEMS COMMAND
PUBLIC WORKS DEPARTMENT, BETHESDA

NAVAL FACILITIES ENGINEERING SYSTEMS COMMAND ~ WASHINGTON
NAVAL SUPPORT ACTIVITY BETHESDA, MARYLAND, BETHESDA, MD

UNIFORMED SERVICES UNIVERSITY OF THE HEALTH SCIENCES

Building 76E Roof Garden

SECOND FLOOR

SCALE: AS NOTED

EPROJECT NO.: 1698751

CONSTR. CONTR. NO.

NAVFAC DRAWING NO. 13148363

SHEET 6 OF 49

GI102

DRAWFORM REVISION: 25 AUGUST 2020

FILE NAME: 171.43 GI102.DWG
OUR REF: 171.43
PLOT DATE: 6/20/2023 11:10:24 AM

DESIGN NOTES

I. CODES AND STANDARDS
- A. WORK IN ACCORDANCE WITH REQUIREMENTS OF THE UFC 1-200-01 DOD BUILDING CODE, UFC 3-301-01 STRUCTURAL ENGINEERING, AND THE INTERNATIONAL BUILDING CODE, 2018.
- B. USE THE CURRENT VERSTION OF ALL CODES, REFERENCES AND STANDARDS REFERRED UNLESS A DIFFERENT VERSION IS LISTED IN THE BUILDING CODE.

II. DESIGN AND LOADING CRITERIA
- A. SNOW LOAD
  1. GROUND SNOW LOAD: (PG) = 25.0 PSF
  2. SNOW EXPOSURE FACTOR (CE): = 1.0
  3. IMPORTANCE FACTOR (I): = 1.0
  4. THERMAL FACTOR (CT): = 1.0
  5. FLAT ROOF SNOW LOAD (PF): = 20 PSF
- B. SEISMIC LOAD
  1. RISK CATEGORY: = II
  2. SEISMIC IMPORTANCE FACTOR (I): = 1.0
  3. MAPPED SPECTRAL RESPONSE: SS = 0.134, S_1= 0.043
  4. SPECTRAL RESPONSE COEFF S_{DS} = 0.116, S_{D1}= 0.043
  5. SITE CLASSIFICATION: = C
  6. SEISMIC DESIGN CATEGORY = A
- C. WIND LOAD
  1. ULTIMATE WIND SPEED: = 112 MPH
  2. RISK CATEGORY: = II
  3. EXPOSURE: = B
  4. INTERNAL PRESSURE COEFF: = +/- 0.18
  5. COMPONENT AND CLADDING:
     - FOR PARAPET (GURADRAIL) = 89 PSF MAX [ULTIMATE]
     - ROOFTOP:
       - TRELLIS = 40.5 PSF [ULTIMATE]
     - UPLIFT ON ROOF:
       - ZONE 1: = 40.1 PSF MAX [ULTIMATE]
       - ZONE 2: = 52.9 PSF MAX [ULTIMATE]
       - ZONE 3: = 72.1 PSF MAX [ULTIMATE]

  OTHER DESIGN PRESSURES MAYBE USED IF SIGNED & SEALED CALCULATIONS ARE SUBMITTED FOR REVIEW
- D. DESIGN MINIMUM LIVE LOADS:
  1. ROOF PAVER AREAS: = 50 PSF
  2. GREEN ROOF AREAS: = 30 PSF [LIVE LOAD REDUCTION]
  3. REFER TO UNIFORM LOADING DIAGRAM ON SHEET S101
- E. EXISTING LIVE LOAD CAPACITIES
  1. THE EXISTING ALLOWABLE LIVE LOAD CAPACITIES PER EXISTING DRAWINGS ARE AS FOLLOWS:
     - i. 1ST & 2ND FLOOR OFFICES = 100 PSF [INCLUDES 20 PSF FOR PARTITIONS]
     - ii. 1ST FLOOR ROOF & MAIN ROOF = 30 PSF
  2. PROVIDE TEMPORARY SHORING AND/OR BRACING WHEREVER THE LOADING FROM THE CONTRACTOR'S WORK EXCEEDS THE ALLOWABLE LOAD CAPACITIES OF THE EXISTING STRUCTURE.

III. WOOD AND TIMBER FRAMING MATERIALS
- A. PROVIDE LUMBER AND TIMBER DESIGN, FABRICATION AND ERECTION IN ACCORDANCE WITH:
  1. "NATIONAL DESIGN SPECIFICATIONS FOR WOOD CONSTRUCTION."
  2. "AMERICAN SOFTWOOD LUMBER STANDARDS."
  3. GRADES FOR JOISTS: REDWOOD #1, WITH MAXIMUM MOISTURE CONTENT 19%.

  SAWN LUMBER MINIMUM MEMBER PROPERTIES:
  1. JOISTS
     - a) FLEXURE: FB = 750 PSI
     - b) SHEAR: FV = 160 PSI
     - c) MODULUS OF ELASTICITY E = 1,100,000 PSI
- B. FOR TREATED LUMBER COMPLY WITH REQUIREMENTS OF THE "WOOD-PRESERVERS' ASSOCIATION."
  1. TIMBER & LUMBER: AWPA C1

IV. STRUCTURAL STEEL
- A. PROVIDE STRUCTURAL STEEL THAT IS DESIGNED, FABRICATED AND ERECTED IN ACCORDANCE WITH "SPECIFICATION FOR STRUCTURAL STEEL BUILDINGS AND THE "MANUAL OF STEEL CONSTRUCTION" FIFTEENTH EDITION.
- B. STRUCTURAL STEEL:
  1. STRUCTURAL "W" & "T" SHAPES: ASTM A-992 FY = 50,000 PSI
  2. BALANCE OF STEEL SHAPES & PLATES: ASTM A-36 FY = 36,000 PSI
  3. HOLLOW SECTIONS (HSS) SQUARE & RECTANGULAR ASTM A-500B FY = 46,000 PSI
  4. HIGH STRENGTH BOLTS: ASTM F3125, GR A-325 CONN TYPE-N
  5. GALVANIZING (HOT-DIP): ASTM A-123
- C. PROVIDE CONNECTIONS IN ACCORDANCE WITH "BEAM CONNECTIONS" AS DESCRIBED IN THE AISC MANUAL. CONNECTIONS SHALL BE MADE USING HIGH STRENGTH BOLTS IN ACCORDANCE WITH ASTM A-325. SHOP CONNECTIONS MAY BE WELDED IN LIEU OF BOLTING. WHERE REACTION NOT GIVEN ON PLANS AND SECTIONS, PROVIDE CONNECTIONS DESIGNED FOR A MINIMUM OF 60% FOR FILLER BEAMS AND 70 % FOR GIRDERS OF MAXIMUM BEAM CARRYING CAPACITY UNDER UNIFORM LOAD FOR SPAN SHOWN. SEE PLANS AND SECTIONS FOR OTHER THAN STANDARD CONNECTIONS. PROVIDE MINIMUM NUMBER OF BOLTS IN EACH OF BEAM WEB CONNECTION AND TO SUPPORTING MEMBER AS FOLLOWS:

  (SECTIONS; MC, C, S, M & WF)
  D = 4" - 6": 2 BOLTS HORIZONTAL
  D = 8" - 10": 2 BOLTS VERTICAL
  BOLT SPACING SHALL BE 3" O/C.
- D. ALTERNATE CONNECTIONS TO THOSE SHOWN ON PLANS AND DETAILS WILL BE ALLOWED ONLY WITH THE APPROVAL OF THE CONTRACTING OFFICER. IF SUCH APPROVAL IS GRANTED FOR ANY CONNECTIONS NOT IN ACCORDANCE WITH CONTRACT DOCUMENTS (FABRICATOR'S REDESIGN), THEN SUBMIT SHOP DRAWING FOR ALTERNATE CONNECTIONS UNDER THE SEAL OF LICENSURE OF THE FABRICATOR'S ENGINEER FOR THE LOCAL JURISDICTION.
- E. PROVIDE A-325 BOLTS TIGHTENED TO THE "SNUG TIGHT" CONDITION DEFINED AS THE TIGHTNESS ATTAINED BY A FEW IMPACTS OF AN IMPACT WRENCH OR THE FULL EFFORT OF A MAN USING AN ORDINARY SPUD WRENCH UNLESS OTHERWISE NOTED. ALL THE PLIES OF THE CONNECTED MATERIAL MUST BE INTO FIRM CONTACT TO CONFIRM THE SNUG TIGHT CONDITION.
- F. PROVIDE WELDING ACCORDING TO THE REQUIREMENTS OF THE "STRUCTURAL WELDING CODE" AWS D1.1-08. USE 70 KSI LOW-HYDROGEN ELECTRODES.
- G. UNLESS GALVANIZED OR TO RECEIVE SPRAY-APPLIED FIREPROOFING, PROVIDE A MINIMUMN OF ONE SHOP COAT AND ONE FIELD TOUCH-UP COAT OF RUST-INHIBITING PAINT AFTER ERECTION FOR STRUCTURAL STEEL.
- H. DO NOT FABRICATE STRUCTURAL STEEL PRIOR TO APROVAL OF SHOP DRAWINGS.
- I. PROVIDE STRUCTURAL STEEL THAT IS HOT DIPPED GALVANIZED TO ASTM A123 GRADE Z350 WITH TOUCH UP ON ALL DAMAGED AREAS, INCLUDING FIELD WELDS AT ALL EXTERIOR EXPOSED (INCLUDING IN EXTERIOR WALL WYTHE'S) SHAPES, PLATES AND BOLTS.
- J. PROVIDE STRUCTURAL STEEL SHOP DRAWINGS THAT HAVE BEEN PREPARED UNDER THE SUPERVISION OF A REGISTERED PROFESSIONAL ENGINEER REGISTERED IN PROJECT JURISDICTION. INCLUDE DETAILS FOR APPLICATION AND ASSEMBLY OF ALL STRUCTURAL MEMBERS. INCLUDE DETAILS OF CUTS, CONNECTIONS, HOLES, AND OTHER PERTINENT DATA. INDICATE WELDS BY STANDARD AWS 2.1 SYMBOLS SHOWING SIZE, LENGTH AND TYPE OF EACH WELD. SUBMITTED STRUCTURAL STEEL SHOP DRAWINGS TO THE CONTRACTING OFFICER FOR APPROVAL.
- K. WELD MISCELLANEOUS STEEL CONNECTIONS ALL AROUND WITH ONE-QUARTER-INCH FILLET WELD UNLESS OTHERWISE NOTED, EXCEPT FOR SLOTTED CONNECTIONS.
- L. THE CONTRACTOR SHALL NOT RELEASE BEAMS OR DIAGONAL BRACING FROM HOISTING CABLES UNTIL ALL MEMBERS ARE SECURE WITH AT LEAST (2) BOLTS. ALL FIELD WELDED CONNECTIONS SHALL BE COMPLETED BEFORE RELEASING CABLES.

V. POST- INSTALLED ANCHORS
- A. EXCEPT WHERE INDICATED ON THE DRAWINGS, PROVIDE POST-INSTALLED ANCHORS CONSISTING OF THE FOLLOWING ANCHOR TYPES:
  1. MEDIUM DUTY MECHANICAL ANCHORS FOR CRACKED AND UNCRACKED CONCRETE USE:
     - (1) EXPANSION ANCHOR WITH NON-HOLE CLEANING INSTALLATION OPTION OR HOLLOW DRILL BIT AND SELF-CLEANING VACUUM SYSTEM AND ADAPTIVE TORQUE TOOL FOR APPLICABLE SIZES WITH ICC ESR APPROVALS. WHERE ANCHORS ARE PERMITTED TO BE INSTALLED IN CORED HOLES, USE CORE BITS WITH MATCHED TOLERANCES AS SPECIFIED BY THE MANUFACTURER. PROPERLY CLEAN CORED HOLE PER MANUFACTURER'S INSTRUCTIONS.
- B. SUBSTITUTION REQUESTS FOR ALTERNATE POST INSTALLED ANCHOR PRODUCTS MUST BE APPROVED IN WRITING BY THE CONTRACTING OFFICER PRIOR TO USE AND PROVIDE CALCULATIONS DEMONSTRATING THAT THE SUBSTITUTED PRODUCT IS CAPABLE OF ACHIEVING THE PERFORMANCE VALUES OF THE SPECIFIED PRODUCT. SUBSTITUTIONS WILL BE EVALUATED BY THEIR HAVING AN ICC ESR SHOWING COMPLIANCE WITH THE RELEVANT BUILDING CODE FOR SEISMIC USES, LOAD RESISTANCE, INSTALLATION CATEGORY, AND AVAILABILITY OF COMPREHENSIVE INSTALLATION INSTRUCTIONS.
- C. INSTALL ANCHORS PER THE MANUFACTURER INSTRUCTIONS, AS INCLUDED IN THE ANCHOR PACKAGING.
- D. ARRANGE AN ANCHOR MANUFACTURER'S REPRESENTATIVE TO PROVIDE ONSITE INSTALLATION TRAINING FOR ALL OF THEIR ANCHORING PRODUCTS SPECIFIED. SUBMIT WRITTEN CONFIRMATION THAT ALL OF THE CONTRACTOR'S PERSONNEL WHO INSTALL ANCHORS ARE TRAINED PRIOR TO THE COMMENCEMENT OF INSTALLING ANCHORS.
- E. ANCHOR CAPACITY IS DEPENDENT UPON SPACING BETWEEN ADJACENT ANCHORS AND PROXIMITY OF ANCHORS TO EDGE OF CONCRETE. INSTALL ANCHORS IN ACCORDANCE WITH SPACING AND EDGE CLEARANCES INDICATED ON THE DRAWINGS
- F. INSTALL ANCHORS IN CONCRETE IN INDOOR ANCHOR APPLICATIONS THAT IS DRY.
- G. PROVIDE MECHANICAL ANCHORS THAT HAVE BEEN TESTED AND QUALIFIED FOR USE IN ACCORDANCE WITH ACI 355.2 AND ICC-ES AC 193 FOR CRACKED, UNCRACKED AND SEISMIC CONCRETE RECOGNITION

VI. GENERAL
- A. INFORMATION SHOWN REGARDING EXISTING CONDITIONS HAS BEEN OBTAINED BY LIMITED VISUAL OBSERVATIONS AND/OR FROM EXISTING DRAWINGS BY EWING COLE DATED AUGUST 17, 2005, PROVIDED BY THE OWNER. AREAS NOT VISIBLE HAVE BEEN ASSUMED TYPICAL WITH OBSERVED EXISTING CONDITIONS.
- B. MEASURE AND PROVIDE ALL DIMENSIONS, ELEVATIONS AND CONDITIONS AT THE JOB SITE PRIOR TO CONSTRUCTION AND THE SUBMISSION OF SHOP DRAWINGS, AND NOTIFY THE CONTRACTING OFFICER IMMEDIATELY OF ANY DISCREPANCIES. PROVIDE VERIFICATION AND NOTIFICATION AT LEAST TWO WEEKS PRIOR TO THE START OF WORK SO THAT ANY NECESSARY CHANGES CAN BE MADE WITHOUT DELAYING THE PROJECT SCHEDULE.
- C. DETAILS, SECTIONS, AND NOTES SHOWN ON THESE DRAWINGS ARE INTENDED TO BE TYPICAL AND APPLY TO SIMILAR CONDITIONS ELSEWHERE UNLESS OTHERWISE SHOWN OR NOTED.
- D. PROVIDE SHOP DRAWINGS SUBMITTED TO THE CONTRACTING OFFICER BEARING THE CONTRACTOR'S STAMP, DATE AND SIGNATURE THAT VERIFIES THAT THE DOCUMENTS HAVE BEEN REVIEWED AND CORRECTED FOR CONFORMANCE TO AND COORDINATION WITH CONTRACT DOCUMENTS.
- E. PROCEED WITH FABRICATION ONLY AFTER SHOP DRAWING APPROVAL BY THE ENGINEER.
- F. DO NOT REPRODUCE ANY PORTION OF CONTRACT DOCUMENTS IN THE SHOP DRAWINGS.
- G. SUBMIT INSPECTION REPORTS AND MATERIALS TESTING REPORTS TO THE CONTRACTING OFFICER IN A TIMELY MANNER SUCH THAT CONSTRUCTION DELAY WILL BE AVOIDED.
- H. MEANS AND METHODS OF CONSTRUCTION ARE THE SOLE RESPONSIBILITY OF THE CONTRACTOR.
- I. WHERE THE CONTRACTOR IS REQUIRED TO ENGAGE A PROFESSIONAL ENGINEER TO DESIGN AND SUBMIT CALCULATIONS, AND WHERE THE PROFESSIONAL ENGINEER PREPARES THE CALCULATIONS USING A COMPUTER SOFTWARE SYSTEM, USE SOFTWARE THAT IS READILY AVAILABLE, INDUSTRY STANDARD FOR STRUCTURAL ENGINEERING IN COMMON USE.

VII. GREEN ROOF ASSEMBLIES
- A. LANDSCAPED AND HARDSCAPED AREAS SHALL ONLY BE INSTALLED IN AREAS APPROVED BY THE CONTRACTING OFFICER.
- B. MAINTENANCE OF THE GREEN ROOF COMPONENTS AND PLANT GROWTH CONTROL TO PREVENT STRUCTURAL OVERLOAD AND SERVICEABILITY ISSUES IS THE RESPONSIBILITY OF THE OWNER.
- C. SEE STRUCTURAL LOADING MAPS FOR LOCATION AND LIMITS OF SUPERIMPOSED DEAD AND LIVE LOADS. SECTIONS INDICATED ON LOAD MAPS SHOW INTENT OF DESIGN. COORDINATE WITH LANDSCAPE ARCHITECT AND GREEN ROOF ASSEMBLY MANUFACTURER/SUPPLIER TO VERIFY THAT LANDSCAPED AND HARDSCAPED DESIGNS ARE WITHIN THE STRUCTURAL LOAD LIMITS PROVIDED.
- D. PROVIDE SUBMITTAL FOR:
  1. WEIGHTS AND THICKNESS OF ALL COMPONENTS AND LAYERS. SELECTED ENGINEERED FILL SHALL INCLUDE SATURATED AND UNSATURATED DENSITY AS WELL AS PERMEABILITY DATA.
  2. DETAIL SECTIONS OF SELECTED GREEN ROOF ASSEMBLIES.
- E. FABRICATE AND TEST A MOCKUP OF THE FINAL GREEN ROOF ASSEMBLY FOR REVIEW AND APPROVAL MOCKUP AND MATERIALS SHALL BE TESTED IN ACCORDANCE WITH ASTM E2397 AND ASTM E2399. LOAD AND VOLUME FLOW DATA SHALL BE PROVIDED FOR REVIEW.

VIII. TESTING AND INSPECTION

THE CONTRACTOR WILL RETAIN THE SERVICES TESTING AND INSPECTION AGENCY TO PERFORM THE SERVICES SPECIFIED.
- A. PROVIDE SERVICES ACCORDANCE WITH REQUIREMENTS OF THE LOCAL JURISDICTION AT A MINIMUM.
- B. FAILURE TO RETAIN A TESTING AGENCY TO PROVIDE REQUIRED SERVICES OR A FAILURE TO SUBMIT SIGNED AND SEALED REPORTS IS A NON-COMPLIANCE WITH CONTRACT DOCUMENTS.
- C. REMOVE AND REPLACE CONSTRUCTION CONSIDERED NON-COMPLIANT.
- D. ALL TESTING AND INSPECTION SHALL BE UNDER THE DIRECTION OF A PROFESSIONAL ENGINEER LICENSED TO PRACTICE IN THE LOCAL JURISDICTION.
- E. PROVIDE PRELIMINARY HANDWRITTEN SITE VISIT REPORTS CONFIRMING VERBAL DISCUSSIONS TO THE CONTRACTOR REGARDING THE RESULTS OF INSPECTIONS PRIOR TO LEAVING JOB SITE.
- F. SUBMIT FINAL REPORTS TO THE CONTRACTING OFFICER IN A TIMELY MANNER, BUT NO LATER THAN TEN (10) DAYS FOLLOWING INSPECTION OR TESTING UNDER THE NAME AND SIGNATURE OF THE INSPECTOR AND LICENSURE SEAL AND SIGNATURE OF THE PROFESSIONAL ENGINEER RESPONSIBLE FOR TESTING AND INSPECTION.
- G. PROVIDE INSPECTION FOR THE FOLLOWING AT A MINIMUM:
  1. STRUCTURAL STEEL: LOCATION, ASTM DESIGNATION, MEMBER SIZES, TYPE (PAINTED, GALVANIZED), PLACEMENT AND CONNECTIONS INCLUDING WELDS, BOLTS, AND POST INSTALLED ANCHORS.
  2. WOOD: LUMBER, FOR IMPERFECTIONS THAT ARE CAUSE FOR REJECTION, NAILING, BOLTED PLATES, AND OTHER CONNECTIONS.
- H. PROVIDE MATERIAL TESTING THE FOLLOWING:
  1. STRUCTURAL STEEL: YIELD AND ULTIMATE STRENGTHS. (MILL REPORTS ARE ACCEPTABLE.)

SYM.	DESCRIPTION	DATE	APPR
Project Status FINAL DESIGN SUBMISSION		Issue Date 06/28/2023	

NAVFAC

PROFESSIONAL CERTIFICATION. I CERTIFY THAT THESE DOCUMENTS WERE PREPARED OR APPROVED BY ME AND THAT I AM A DULY LICENSED ENGINEER UNDER THE LAWS OF THE STATE OF MARYLAND, LICENSE NUMBER 32719, EXPIRATION DATE 02/09/24.

SEAL

MTFA architecture
3200 LEE HIGHWAY, ARLINGTON, VA 22207
(703) 524 - 6616 www.mtfa.net

mcmullan CONSULTING ENGINEERS
11800 SUNRISE VALLEY DR, STE 430 RESTON, VA 20191
(703) 556 - 0651 www.mcmse.com
A/E INFO

APPROVED

FOR COMMANDER NAVFAC

ACTIVITY: FINAL DESIGN SUBMISSION

SATISFACTORY TO DATE

DES AS | DRW SO | CHK DB

PM/DM

BRANCH MANAGER

CHIEF ENG/ARCH

FIRE PROTECTION

DEPARTMENT OF THE NAVY
NAVAL FACILITIES ENGINEERING SYSTEMS COMMAND ~ WASHINGTON
PUBLIC WORKS DEPARTMENT, BETHESDA
NAVAL FACILITIES ENGINEERING SYSTEMS COMMAND
NAVAL SUPPORT ACTIVITY, BETHESDA, MARYLAND

Owner: Enter address here

USU-76 Roof Garden Design

DESIGN NOTES

SCALE: AS NOTED

EPROJECT NO.: 1698751

CONSTR. CONTR. NO.

NAVFAC DRAWING NO. 13148364

SHEET 7 OF 47

S-001

DRAWFORM REVISION: 25 AUGUST 2020

S-001 Project Status Issue Date
6/19/2023 2:53:08 PM

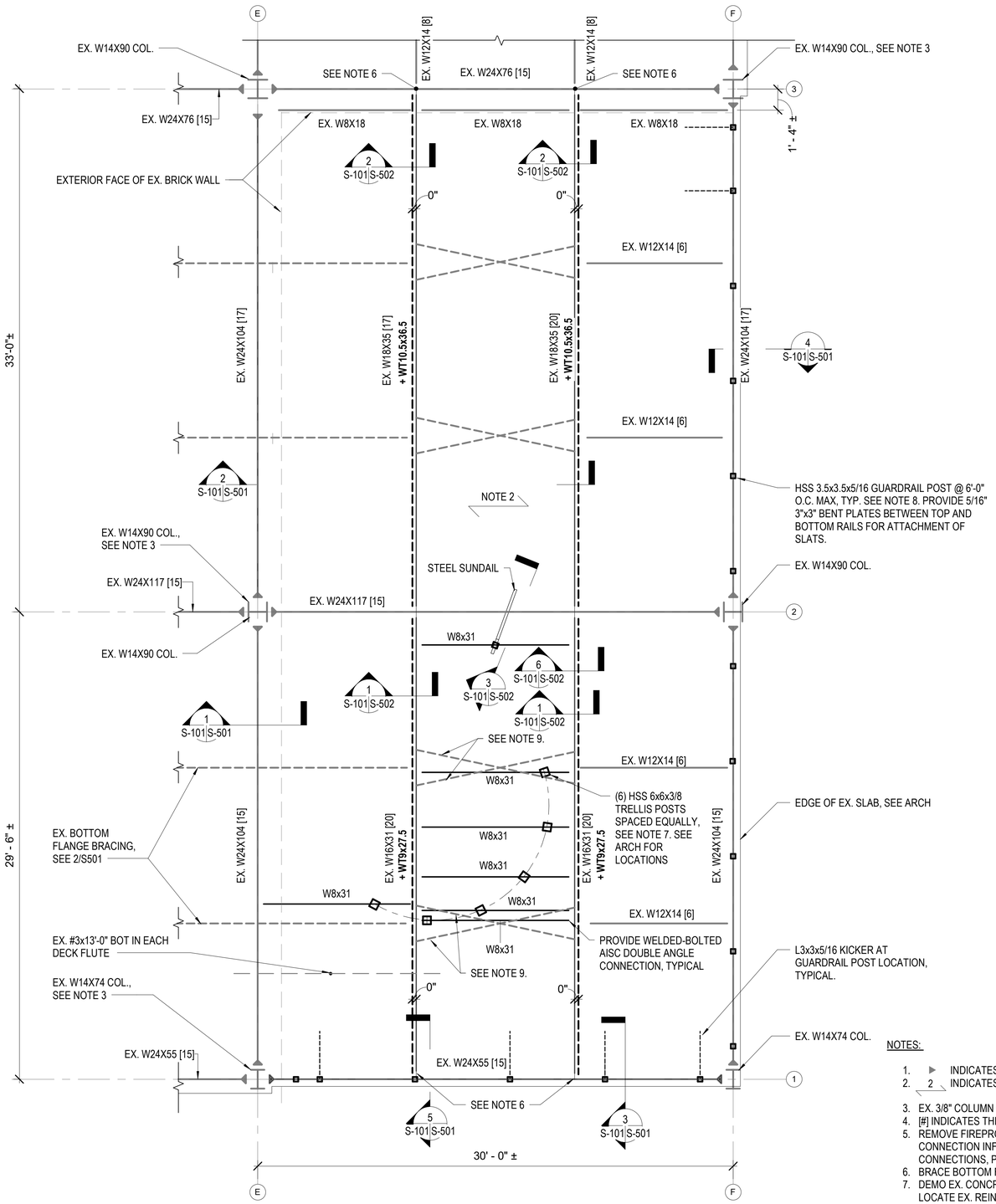

1 S-101 S-101 PARTIAL LEVEL 2 (ROOF) FRAMING PLAN
1/4" = 1'-0"

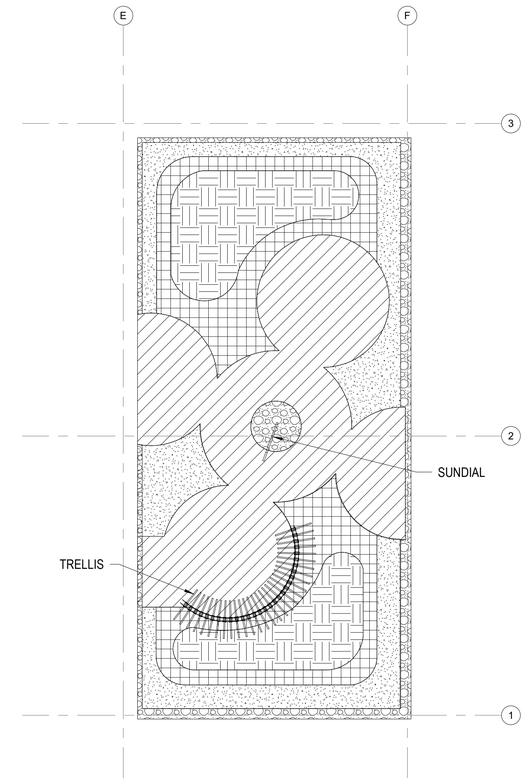

2 S-101 S-101 ROOF GARDEN UNIFORM LOAD DIAGRAM
1/8" = 1'-0"

LOADING	DEAD LOAD(1)	LIVE LOAD
6" OF SOIL	65 PSF	30 PSF (2)
6"-12" OF SOIL	65-117 PSF	30 PSF (2)
MAX 12" OF SOIL ON MAX. 15" OF TAPPERED INSULATION	117 PSF	30 PSF (2)
WOOD PAVERS (3)	20 PSF	50 PSF
6" GRAVEL	85 PSF	30 PSF (2)

(1) INCLUDES WEIGHT OF ROOFING AND GREEN ROOF/PAVER ASSEMBLY. EXCLUDES EXISTING MEP AND CEILING.
(2) LIVE LOAD REDUCTION PERMITTED
(3) PAVER MANUFACTURER'S PROFESSIONAL ENGINEER TO PROVIDE ATTACHMENT FOR PAVERS TO RESIST WIND UPLIFT. REFER TO S001. OTHER DESIGN PRESSURES MAYBE USED IF SIGNED & SEALED CALCULATIONS ARE SUBMITTED FOR REVIEW

NOTES:

1. ▶ INDICATES EX. MOMENT CONNECTIONS.
2. 2 INDICATES EX. 3 1/4" L.W. CONC. OVER 3" 20 GA. GALV. COMPOSITE METAL DECK. REINFORCED WITH #3@12" CONT. EACH WAY (TOP OUTER LAYER EAST-WEST).
3. EX. 3/8" COLUMN WEB DOUBLER PL AT MOMENT CONNECTION.
4. [#] INDICATES THE NUMBER OF EX. 3/4" Ø x 5" LONG HEADED STUDS WELDED TO THE TOP FLANGE OF BEAMS.
5. REMOVE FIREPROOFING AT ALL EXIST. BEAM TO BEAM AND BEAM TO COLUMN CONNECTIONS ENCLOSED BY GRIDS E-F AND 1-2. SUBMIT REPORT WITH EX. CONNECTION INFORMATION AS REQUESTED ON SHEET S-503 TO THE CONTRACTING OFFICER. [FOR BIDDING PURPOSES, ASSUME STRENGTHENING AT ALL EX. CONNECTIONS, PER NOTES 4 AND 5 ON S-503.]
6. BRACE BOTTOM FLANGE OF EXISTING BEAM. SEE 5/S501.
7. DEMO EX. CONCRETE AND METAL DECK FOR INSTALLATION OF NEW TRELLIS POSTS. REPLACE CONC. AFTER POST INSTALLATION. PRIOR TO DEMO, GPR SCAN TO LOCATE EX. REINFORCEMENT SO IT IS NOT CUT OR DAMAGED DURING DEMOLITION. SEE 6/S-501 FOR POST TO EX. BEAM CONN.
8. DEMO EX. CONCRETE AND METAL DECK FOR INSTALLATION OF NEW GUARDRAIL POSTS. PATCH REPAIR AFTER INSTALLATION. PRIOR TO DEMO, GPR SCAN TO LOCATE EX. REINFORCMENT.
9. REMOVE EX. BRACING ONLY WHERE INDICATED FOR INSTALLATION OF NEW BEAM.
10. ALL NEW STEEL TO BE HOT-DIPPED GALVANIZED AND PAINTED. PROVIDE PREP AND TOUCH UP FOR FIELD WELDS.

SYM.	DESCRIPTION	DATE	APPR.
Project Status FINAL DESIGN SUBMISSION		Issue Date 06/28/2023	

NAVFAC

PROFESSIONAL CERTIFICATION. I CERTIFY THAT THESE DOCUMENTS WERE PREPARED OR APPROVED BY ME AND THAT I AM A DULY LICENSED ENGINEER UNDER THE LAWS OF THE STATE OF MARYLAND, LICENSE NUMBER 32719, EXPIRATION DATE 02/09/24.

SEAL

MTFA architecture
3200 LEE HIGHWAY, ARLINGTON, VA 22207
(703) 524 - 6616 www.mtfa.net

mcmullan CONSULTING ENGINEERS
11800 SUNRISE VALLEY DR, STE 430 RESTON, VA 20191
(703) 556 - 0651 www.mcmse.com

A/E INFO

APPROVED

FOR COMMANDER NAVFAC

ACTIVITY
FINAL DESIGN SUBMISSION

SATISFACTORY TO DATE

DES AS DRW SO CHK DB

PM/DM

BRANCH MANAGER

CHIEF ENG/ARCH

FIRE PROTECTION

DEPARTMENT OF THE NAVY
NAVAL FACILITIES ENGINEERING SYSTEMS COMMAND
PUBLIC WORKS DEPARTMENT, BETHESDA
NAVAL FACILITIES ENGINEERING SYSTEMS COMMAND ~ WASHINGTON
NAVAL SUPPORT ACTIVITY BETHESDA, MARYLAND

Owner
Enter address here

USU-76 Roof Garden Design

PARTIAL LEVEL 2 (ROOF) FRAMING PLAN

SCALE: AS NOTED
EPROJECT NO.: 1698751
CONSTR. CONTR. NO.
NAVFAC DRAWING NO.
13148365
SHEET 8 OF 47

S-101

DRAWFORM REVISION: 25 AUGUST 2020

S-101 Project Status Issue Date
6/19/2023 4:20:24 PM

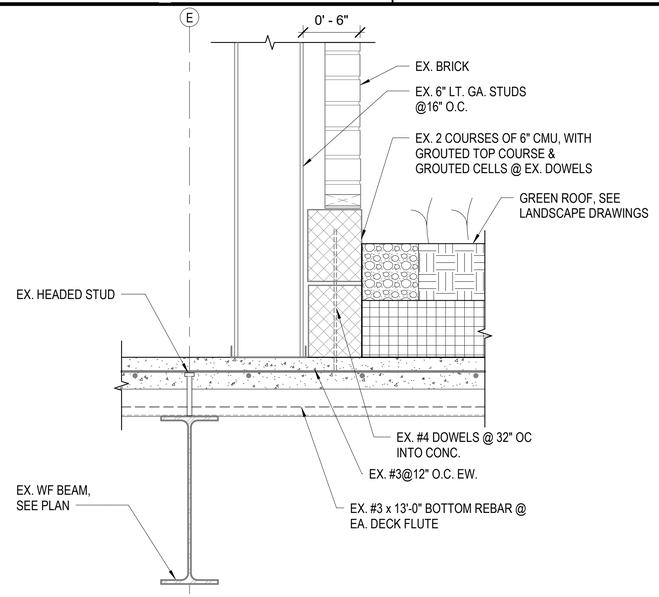

SECTION THROUGH EX. WALL AND NEW GREEN ROOF

1 S-101 S-501 1 1/2" = 1'-0"

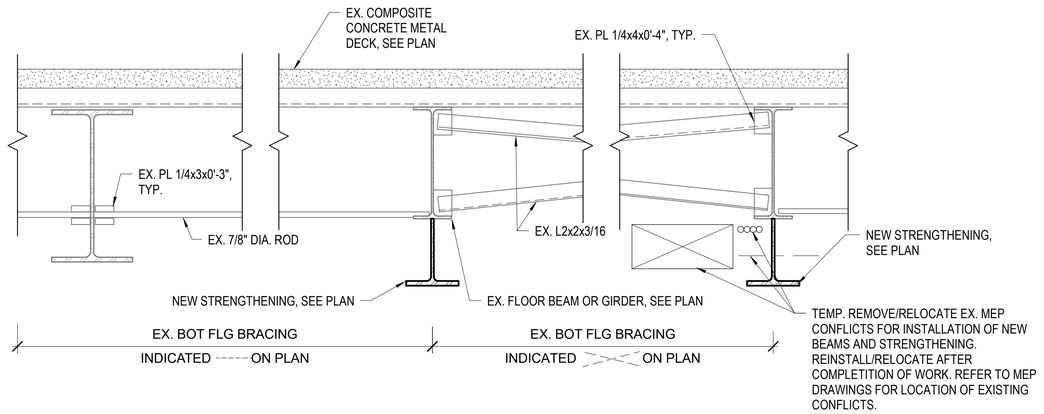

TYPICAL EX. BOTTOM FLANGE BRACING

2 S-101 S-501 1" = 1'-0"

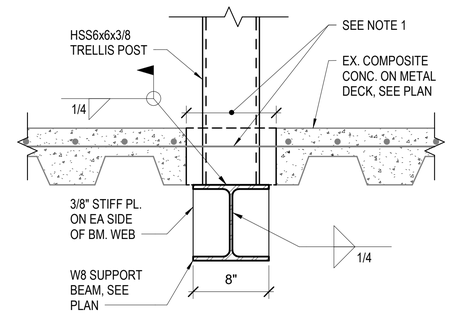

TRELLIS POST TO EX. BEAM CONN.

6 S-101 S-501 1 1/2" = 1'-0"

NOTES:

1. DEMO MIN. AMOUNT EX. CONCRETE FILL AND METAL DECK FOR WELDING NEW TRELLIS POSTS. REPLACE CONCRETE AFTER POST INSTALLATION. GPR SCAN TOP OF SLAB PRIOR TO DEMO SO EXISTING REINF. IS NOT DAMAGED OR CUT
2. REMOVE EX. FIREPROOFING AND MEP ITEMS, AS REQUIRED, FOR INSTALLATION OF BEAM. REINSTALL/RELOCATE AFTER COMPLETION OF WORK. COORDINATE WITH MEP.
3. PROVIDE PROTECTION WHERE REQUIRED DURING WELDING.

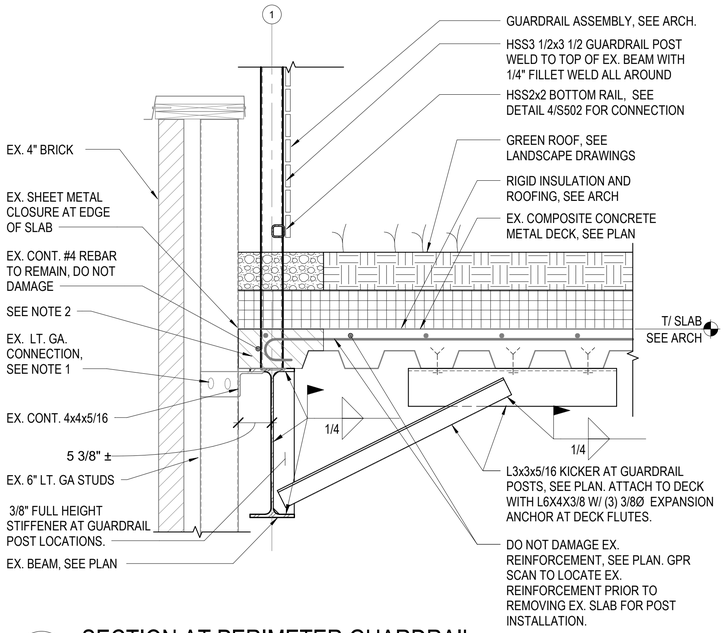

SECTION AT PERIMETER GUARDRAIL

3 S-101 S-501 1" = 1'-0"

NOTES:

1. GC TO PROVIDE LENGTH OF EXIST. VERTICAL SLOTTED HOLES IN LT. GA. STUD ATTACHMENT.
2. DEMO EX. CONCRETE DECK FOR INSTALLATION OF NEW GUARDRAIL POSTS. PATCH REPAIR AFTER INSTALLATION. GPR SCAN TO LOCATION EX. REINFORCMENT. DO NOT DAMAGE EXISTING REINFORCEMENT OR STUD.

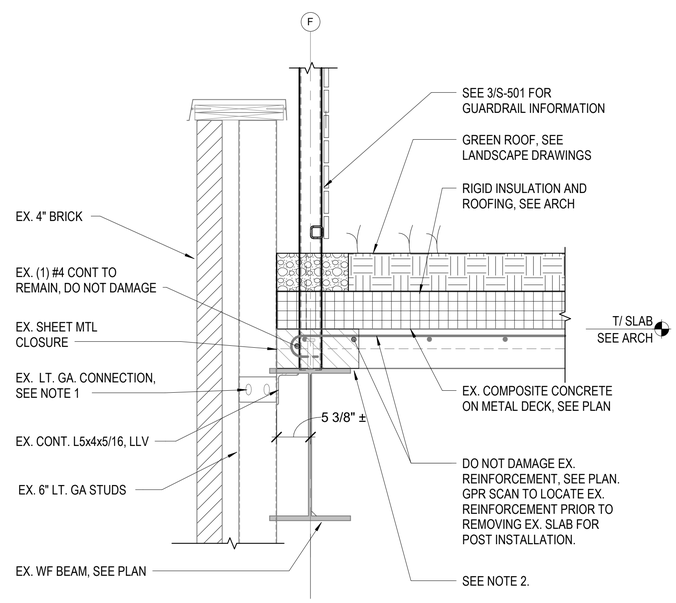

SECTION AT PERIMETER GUARDRAIL

4 S-101 S-501 1" = 1'-0"

NOTES:

1. GC TO FIELD MEASURE AND PROVIDE TYP. LENGTH OF EXIST. VERTICAL SLOTTED HOLES IN LT. GA. STUD ATTACHMENT TO CONTRACTING OFFICER FOR REVIEW.
2. DEMO MIN. AMOUNT EX. CONCRETE DECK FOR INSTALLATION OF NEW GUARDRAIL POSTS. PATCH REPAIR AFTER INSTALLATION. GPR SCAN TO LOCATE EX. REINFORCMENT PRIOR TO DEMO. DO NOT DAMAGE EXISTING REINFORCEMENT OR HEADED STUDS.

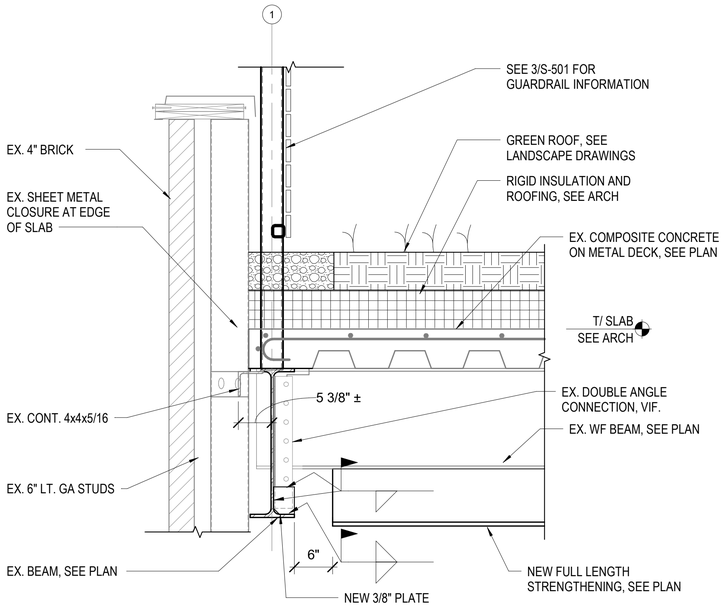

SECTION AT BEAM BOT FLANGE BRACING

5 S-101 S-501 1" = 1'-0"

SYM.	DESCRIPTION	DATE	APPR
Project Status FINAL DESIGN SUBMISSION		Issue Date 06/28/2023	

NAVFAC

PROFESSIONAL CERTIFICATION. I CERTIFY THAT THESE DOCUMENTS WERE PREPARED OR APPROVED BY ME AND THAT I AM A DULY LICENSED ENGINEER UNDER THE LAWS OF THE STATE OF MARYLAND. LICENSE NUMBER 32719, EXPIRATION DATE 02/09/24.

SEAL

MTFA architecture
3200 LEE HIGHWAY, ARLINGTON, VA 22207
(703) 524 - 6616 www.mtfa.net

mcmullan CONSULTING ENGINEERS
11800 SUNRISE VALLEY DR, STE 430 RESTON, VA 20191
(703) 556 - 0651 www.mcmse.com
A/E INFO

APPROVED

FOR COMMANDER NAVFAC

ACTIVITY

FINAL DESIGN SUBMISSION

SATISFACTORY TO DATE

DES AS DRW SO CHK DB

PM/DM

BRANCH MANAGER

CHIEF ENG/ARCH

FIRE PROTECTION

DEPARTMENT OF THE NAVY
NAVAL FACILITIES ENGINEERING SYSTEMS COMMAND
PUBLIC WORKS DEPARTMENT BETHESDA
NAVAL FACILITIES ENGINEERING SYSTEMS COMMAND ~ WASHINGTON
NAVAL SUPPORT ACTIVITY BETHESDA, MARYLAND

Owner: Enter address here

USU-76 Roof Garden Design

SECTIONS AND DETAILS

SCALE: AS NOTED

EPROJECT NO.: 1698751

CONSTR. CONTR. NO.

NAVFAC DRAWING NO. 13148366

SHEET 9 OF 47

S-501

DRAWFORM REVISION: 25 AUGUST 2020

S-501 Project Status Issue Date
6/19/2023 4:20:03 PM

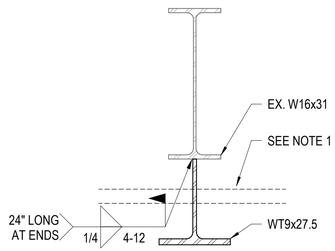

1 EX. W16 BEAM STRENGTHENING DETAIL

S-502 SS-101 1 1/2" = 1'-0"

NOTES:
1. REMOVE EX. FIREPROOFING AND MEP ITEMS, AS REQUIRED, FOR INSTALLATION OF STRENGTHENING. REINSTALL/RELOCATE AFTER COMPLETION OF WORK. COORDINATE WITH MEP.
2. EX. COMPOSITE DECK NOT SHOWN FOR CLARITY.
3. SEE 5/S-501 FOR EXTENT OF WT.
4. NEW WT CAN BE SPLICED FOR TRANSPORT AND INSTALLATION. AVOID SPLICE IN MIDDLE 1/5 OF THE EX. BEAM LENGTH. SEE 8/S-502 FOR PROPOSED SPLICE DETAIL.

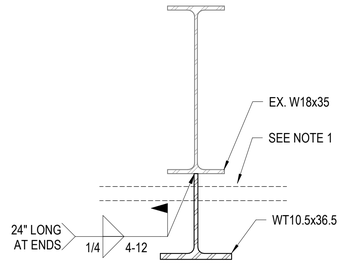

2 EX. W18 BEAM STRENGTHENING DETAIL

S-101 S-502 1 1/2" = 1'-0"

NOTES:
1. REMOVE EX. FIREPROOFING AND MEP ITEMS, AS REQUIRED, FOR INSTALLATION OF STRENGTHENING. REINSTALL/RELOCATE AFTER COMPLETION OF WORK. COORDINATE WITH MEP.
2. EX. COMPOSITE DECK NOT SHOWN FOR CLARITY.
3. PROVIDE PROTECTION WHERE REQUIRED DURING WELDING.
4. SEE 5/S-501 FOR EXTENT OF WT.
5. NEW WT CAN BE SPLICED FOR TRANSPORT AND INSTALLATION. AVOID SPLICE IN MIDDLE 1/5 OF THE EX. BEAM LENGTH. SEE 8/S-502 FOR PROPOSED SPLICE DETAIL.

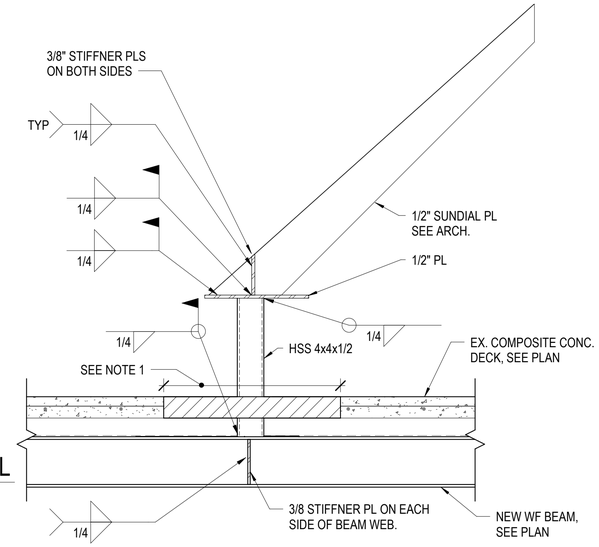

3 SUNDIAL SUPPORT DETAIL

S-101 S-502 1" = 1'-0"

NOTES:
1. REMOVE AND REPLACE EXISTING CONCRETE, AS REQUIRED, FOR WELDING.
2. REMOVE EX. FIREPROOFING AND MEP ITEMS, AS REQUIRED, FOR INSTALLATION OF BEAM. REINSTALL/RELOCATE AFTER COMPLETION OF WORK. COORDINATE WITH MEP.
3. PROVIDE PROTECTION WHERE REQUIRED DURING WELDING.

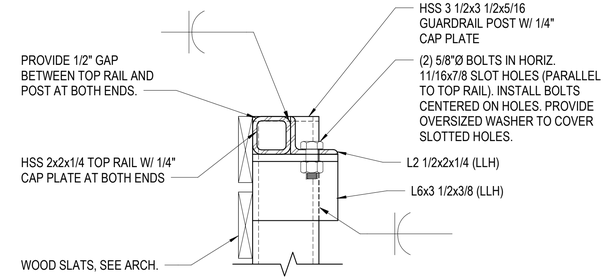

4 GUARDRAIL CONNECTION DETAIL

S-101 S-502 3" = 1'-0"

NOTES:
1. TOP RAIL CONNECTION SHOWN. BOTTOM RAIL CONNECTION SIMILAR.

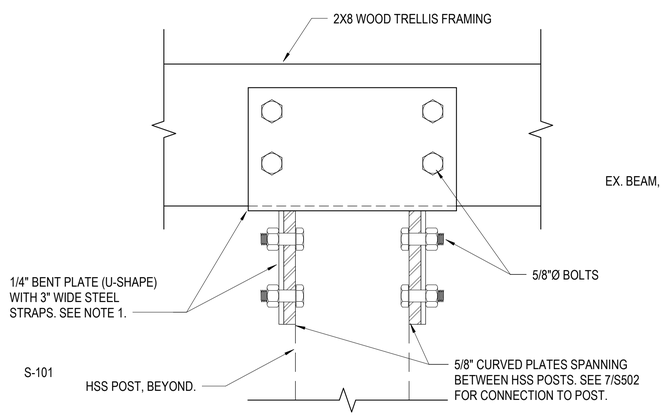

5 TRELLIS WOOD FRAMING CONN DETAIL

S-502 S-502 3" = 1'-0"

NOTES:
1. AT TOP OF POSTS, WELD BENT PLATE DIRECTLY TO THE HSS POST CAP PLATE.

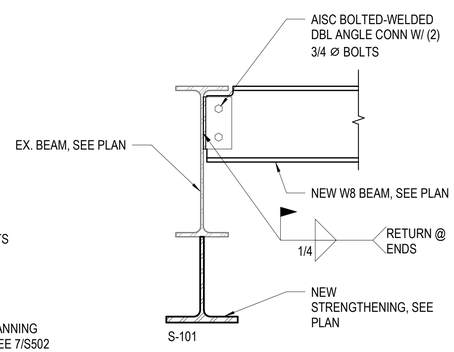

6 NEW BEAM TO EX. BEAM CONN.

S-502 S-502 1 1/2" = 1'-0"

NOTES:
1. REMOVE AND REPLACE EXISTING CONCRETE, AS REQUIRED, FOR WELDING.
2. REMOVE AND REINSTALL/RELOCATE EX. MEP CONFLICT FOR BEAM INSTALLATION.
3. PROVIDE PROTECTION WHERE REQUIRED DURING WELDING.

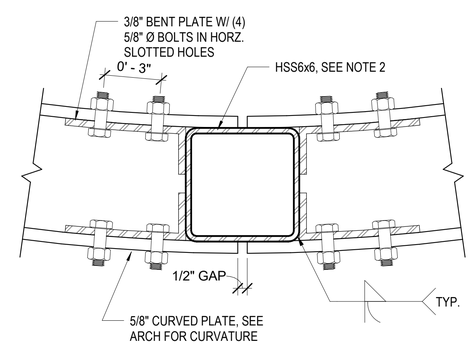

7 CURVED PL TO POST CONN DETAIL

S-502 S-502 3" = 1'-0"

NOTES:
1. WOOD TRELLIS FRAMING NOT SHOWN FOR CLARITY.
2. PROVIDE 1/4" CAP PLATE AT TOP OF HSS POST.
3. CENTER BOLTS IN SLOTTED HOLES.

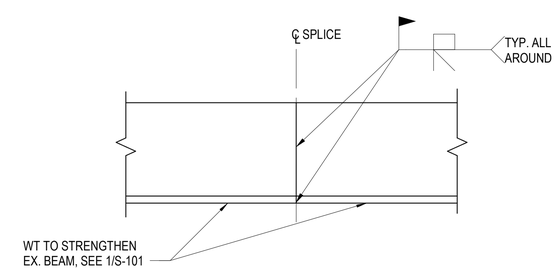

8 WT FIELD SPLICE DETAIL

S-101 S-502 S-502 1 1/2" = 1'-0"

NOTES:
1. NEW WT CAN BE SPLICED FOR TRANSPORT AND INSTALLATION.
2. AVOID SPLICE IN MIDDLE 1/5 OF THE EX. BEAM LENGTH.
3. FIELD CUTTING IS NOT PERMITTED.

SYM.	DESCRIPTION	DATE	APPR
Project Status FINAL DESIGN SUBMISSION		Issue Date 06/28/2023	

NAVFAC

PROFESSIONAL CERTIFICATION. I CERTIFY THAT THESE DOCUMENTS WERE PREPARED OR APPROVED BY ME AND THAT I AM A DULY LICENSED ENGINEER UNDER THE LAWS OF THE STATE OF MARYLAND, LICENSE NUMBER 32719, EXPIRATION DATE 02/09/24.

SEAL

MTFA architecture
3200 LEE HIGHWAY, ARLINGTON, VA 22207
(703) 524 - 6616 www.mtfa.net

mcmullan CONSULTING ENGINEERS
11800 SUNRISE VALLEY DR, STE 430 RESTON, VA 20191
(703) 556 - 0651 www.mcmse.com
A/E INFO

APPROVED

FOR COMMANDER NAVFAC

ACTIVITY
FINAL DESIGN SUBMISSION

SATISFACTORY TO DATE

DES AS | DRW SO | CHK DB

PMDM

BRANCH MANAGER

CHIEF ENG/ARCH

FIRE PROTECTION

DEPARTMENT OF THE NAVY
NAVAL FACILITIES ENGINEERING SYSTEMS COMMAND
PUBLIC WORKS DEPARTMENT, BETHESDA

NAVAL FACILITIES ENGINEERING SYSTEMS COMMAND ~ WASHINGTON
NAVAL SUPPORT ACTIVITY BETHESDA, MARYLAND

Owner: Enter address here

USU-76 Roof Garden Design

SECTIONS AND DETAILS

SCALE: AS NOTED

EPROJECT NO.: 1698751

CONSTR. CONTR. NO.

NAVFAC DRAWING NO.
13148368

SHEET 10 OF 47

S-502

DRAWFORM REVISION: 25 AUGUST 2020

S-502 Project Status Issue Date
6/19/2023 2:53:09 PM

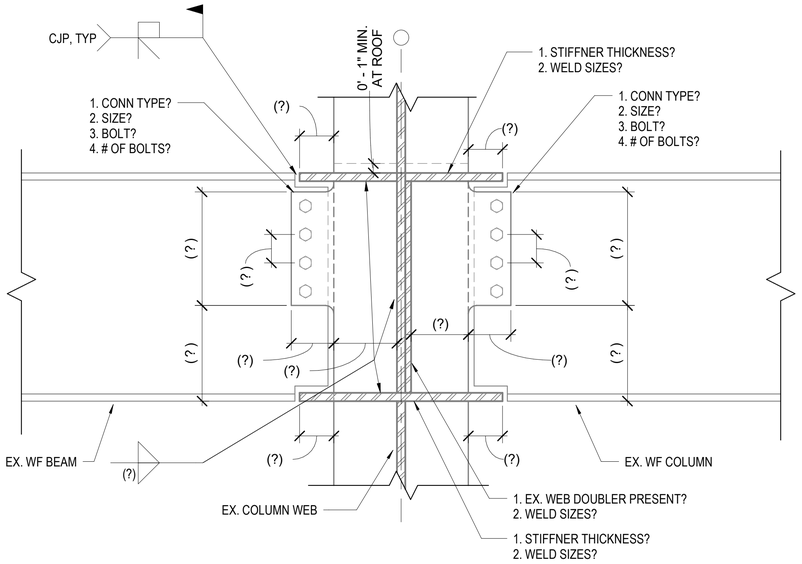

COLUMN GRIDS: _____

1 S-503 S-503 EX. BEAM TO COL WEB MOMENT CONN

1 1/2" = 1'-0"

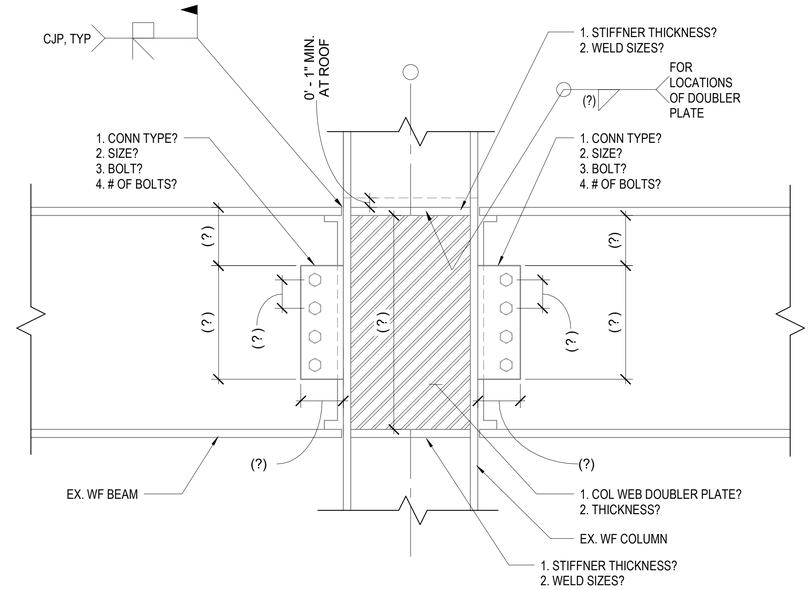

COLUMN GRIDS: _____

2 S-503 S-503 EX BEAM TO COL FLANGE MOMENT CONN

1 1/2" = 1'-0"

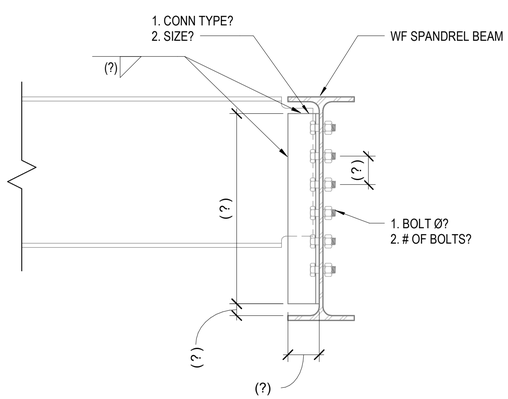

CONNECTION LOCATION: _____

3 S-503 S-503 EX. CONN. AT SPANDREL BEAM DETAIL

1 1/2" = 1'-0"

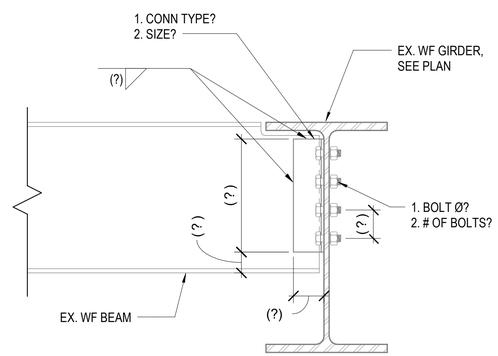

CONNECTION LOCATION: _____

4 S-503 S-503 EX. BEAM TO GIRDER CONN. DETAIL

1 1/2" = 1'-0"

GENERAL NOTES FOR THIS SHEET:

1. REMOVE FIREPROOFING AT ALL EXIST. BEAM TO BEAM AND BEAM TO COLUMN CONNECTIONS ENCLOSED BY GRIDS E-F AND 1-2 SHOWN ON SHEET S-101.
2. REMOVE ANY EXISTING MEP CONFLICTS AS REQUIRED TO SEE EXISTING CONNECTION INFORMATION IN NOTE 1.
3. COPY AND USE TYP. DETAIL TEMPLATES ON THIS SHEET TO DOCUMENT EXISTING CONNECTION INFORMATION AFTER WORK FROM NOTES 1 AND 2 IS COMPLETE. SUBMIT EX. CONNECTION INFORMATION IN A REPORT SIGNED AND SEALED BY CONTRACTOR'S PROFESSIONAL ENGINEER TO THE CONTRACTING OFFICER FOR EOR REVIEW AND ANALYSIS AT LEAST (3) WEEKS PRIOR TO THE PREPARATION OF SHOP DRAWINGS.
4. FOR BIDDING PURPOSE ASSUME ALL EXISTING BEAM TO COLUMN CONNECTIONS WILL BE STRENGTHENED WITH:
   A. WT8 BRACKET AT BOTTOM OF BEAM
   B. 5/8" PLATE AT TOP OF EX. BEAM FILLET WELDED TO BEAM AND FULL PEN WELDED TO COL
   C. 5/16" FILLET WELDS ADDED TO EXISTING SHEAR TAB ON BEAM (THREE SIDES)
5. FOR BIDDING PURPOSE ASSUME ALL EXISTING BEAM TO BEAM CONNECTIONSWILL BE STRENGTHENED WITH:
   A. 5/16" FILLET WELDS ADDED TO EXISTING SHEAR TAB ON BEAM (THREE SIDES) OR TO EXISTING DOUBLE ANGLES (VERTICAL SIDES WITH RETURNS AT TOP AND BOTTOM).

SYM.	DESCRIPTION	DATE	APPR
	Project Status FINAL DESIGN SUBMISSION	Issue Date 06/28/2023	

NAVFAC

PROFESSIONAL CERTIFICATION. I CERTIFY THAT THESE DOCUMENTS WERE PREPARED OR APPROVED BY ME AND THAT I AM A DULY LICENSED ENGINEER UNDER THE LAWS OF THE STATE OF MARYLAND, LICENSE NUMBER 32719, EXPIRATION DATE 02/09/24.

SEAL

MTFA architecture
3200 LEE HIGHWAY, ARLINGTON, VA 22207
(703) 524 - 6616 www.mtfa.net

mcmullan CONSULTING ENGINEERS
11800 SUNRISE VALLEY DR, STE 430 RESTON, VA 20191
(703) 556 - 0651 www.mcmse.com
A/E INFO

APPROVED

FOR COMMANDER NAVFAC

ACTIVITY

FINAL DESIGN SUBMISSION

SATISFACTORY TO DATE

DES AS | DRW SO | CHK DB

PMDM

BRANCH MANAGER

CHIEF ENG/ARCH

FIRE PROTECTION

NAVAL FACILITIES ENGINEERING SYSTEMS COMMAND

DEPARTMENT OF THE NAVY
NAVAL FACILITIES ENGINEERING SYSTEMS COMMAND ~ WASHINGTON
PUBLIC WORKS DEPARTMENT, BETHESDA
NAVAL SUPPORT ACTIVITY BETHESDA, MARYLAND

Owner

Enter address here

USU-76 Roof Garden Design

EXISTING CONNECTION VERIFICATION DETAILS

SCALE: AS NOTED

EPROJECT NO.: 1698751

CONSTR. CONTR. NO.

NAVFAC DRAWING NO.
13148367

SHEET 11 OF 47

S-503

DRAWFORM REVISION: 25 AUGUST 2020

S-503 Project Status Issue Date
6/19/2023 2:53:09 PM

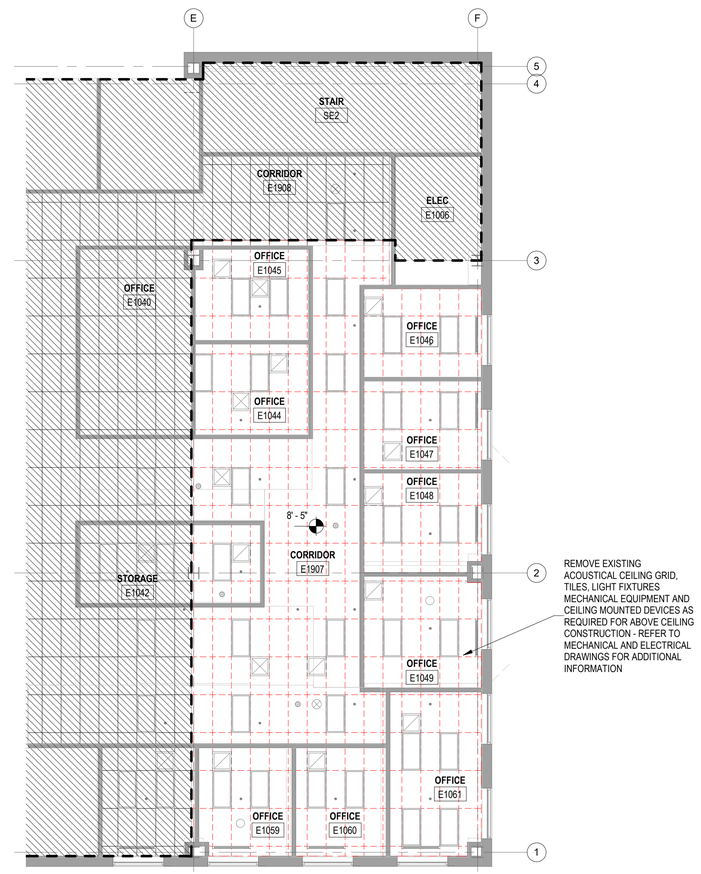

1 AD101 LEVEL 1 - DEMOLITION REFLECTED CEILING PLAN

SCALE: 1/8" = 1'-0"

LEGEND (DEMOLITION)

- EXISTING CONSTRUCTION TO REMAIN
- EXISTING CONSTRUCTION TO BE REMOVED
- NOT IN CONTRACT
- LIMITS OF WORK AREA - REFER TO G-003

GENERAL NOTES (DEMOLITION RCP)

1. PROTECT EXISTING TO REMAIN ITEMS AND FINISHES FROM DAMAGE DURING CONSTRUCTION. PROMPTLY REPAIR DAMAGE CAUSED TO ADJACENT FACILITIES BY DEMOLITION OPERATIONS AT NO COST TO THE GOVERNMENT.
2. REFER TO ENGINEERING DRAWINGS AND SPECIFICATIONS FOR ADDITIONAL DEMOLITION INFORMATION.
3. CEILING ELEVATIONS ARE BASED ON FINISHED FLOOR ELEVATIONS DIRECTLY BELOW MARKED LOCATIONS. VERIFY IN FIELD.
4. MAINTAIN CLEAR AND SAFE EGRESS FOR ALL OCCUPIED SPACES AND ADJACENT AREAS DURING PHASED CONSTRUCTION.

LEGEND (REFLECTED CEILING PLANS)

- 9' - 0" CEILING HEIGHT AFF
- 2 x 4 ACOUSTIC CEILING TILE
- 2'-0 x 4'-0" RECESSED LIGHT FIXTURE
- 2'-0 x 2'-0" RECESSED LIGHT FIXTURE
- RECESSED DOWNLIGHT
- EXIT SIGN
- SMOKE DETECTOR
- SPRINKLER
- FIRE STROBE
- SUPPLY REGISTER
- RETURN REGISTER

PLAN NORTH

TRUE NORTH

0 4' 8' 16' 24'

1/8" = 1'-0"

SYM	DESCRIPTION	DATE	APPR
	Final Design Submission	06/28/2023	

NAVFAC

PROFESSIONAL CERTIFICATION. I CERTIFY THAT THESE DOCUMENTS WERE PREPARED OR APPROVED BY ME AND THAT I AM A DULY LICENSED ARCHITECT UNDER THE LAWS OF THE STATE OF MARYLAND, LICENSE NUMBER 9635, EXPIRATION DATE 8/15/23.

6/28/23

SEAL

MTFA architecture

3200 LANGSTON BOULEVARD, ARLINGTON, VA 22207
(703) 524 - 8616 www.mtfa.net

A/E INFO

APPROVED

FOR COMMANDER NAVFAC

ACTIVITY

FINAL DESIGN SUBMISSION

SATISFACTORY TO DATE

DES MJB DRW CBM CHK BB

PM/DM

BRANCH MANAGER

CHIEF ENG/ARCH

FIRE PROTECTION

DEPARTMENT OF THE NAVY
NAVAL FACILITIES ENGINEERING SYSTEMS COMMAND ~ WASHINGTON
PUBLIC WORKS DEPARTMENT, BETHESDA
NAVAL FACILITIES ENGINEERING SYSTEMS COMMAND
NAVAL SUPPORT ACTIVITY BETHESDA, MARYLAND
UNIFORMED SERVICES UNIVERSITY OF THE HEALTH SCIENCES
BETHESDA, MD

Building 76E Roof Garden

LEVEL 1 DEMOLITION REFLECTED CEILING PLAN

SCALE: AS NOTED

EPROJECT NO.: 1698751

CONSTR. CONTR. NO.

NAVFAC DRAWING NO. 13148369

SHEET 12 OF 49

AD101

DRAWFORM REVISION: 25 AUGUST 2020

AD101 Final Design Submission 06/28/2023
6/28/2023 2:19:17 PM

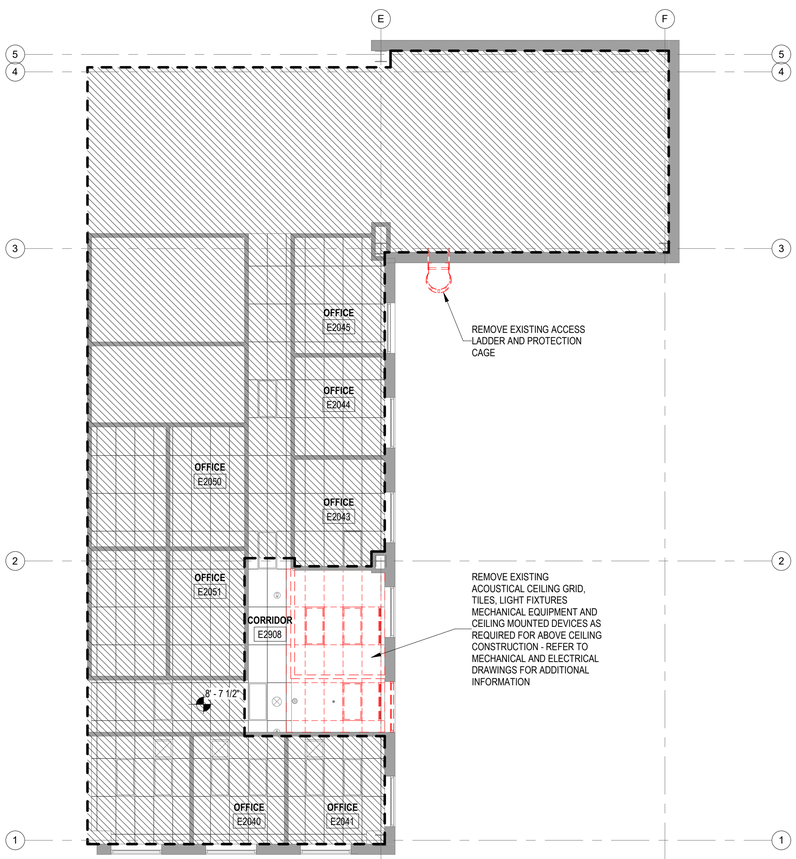

2 A-301 AD102 LEVEL 2 - DEMOLITION REFLECTED CEILING PLAN

SCALE: 1/8" = 1'-0"

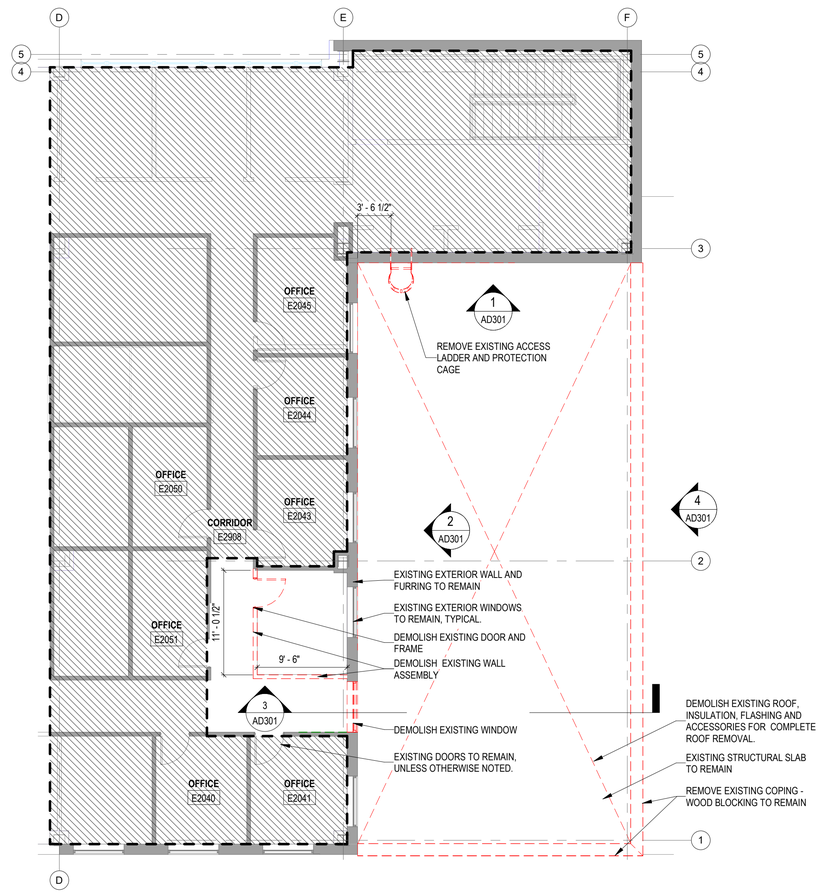

1 AD102 LEVEL 2 - ENLARGED FLOOR PLAN DEMO

SCALE: 1/8" = 1'-0"

LEGEND (REFLECTED CEILING PLANS)

- 9' - 0" CEILING HEIGHT AFF
- 2 x 4 ACOUSTIC CEILING TILE
- 2'-0 x 4'-0" RECESSED LIGHT FIXTURE
- 2'-0 x 2'-0" RECESSED LIGHT FIXTURE
- RECESSED DOWNLIGHT
- EXIT SIGN
- SMOKE DETECTOR
- SPRINKLER
- FIRE STROBE
- SUPPLY REGISTER
- RETURN REGISTER

LEGEND (DEMOLITION)

- EXISTING CONSTRUCTION TO REMAIN
- EXISTING CONSTRUCTION TO BE REMOVED
- NOT IN CONTRACT
- LIMITS OF WORK AREA - REFER TO G-003

GENERAL NOTES (DEMO PLANS)

1. VERIFY ALL DIMENSIONS DESCRIBING EXTENTS OF DEMOLITION WITH ARCHITECT IN FIELD.
2. DIMENSIONS DEMONSTRATE DESIGN INTENT AND SHALL BE COORDINATED WITH ACTUAL CONDITIONS. NOTIFY ARCHITECT IMMEDIATELY OF ANY CONFLICTS WITH EXISTING CONDITIONS.
3. COORDINATE ALL DEMOLITION WITH NEW WORK. NOTIFY ARCHITECT IMMEDIATELY OF ANY CONFLICT.
4. REFER TO STRUCTURAL DRAWINGS FOR REMOVAL OF EXISTING STRUCTURAL BUILDING ELEMENTS INCLUDING BUT NOT LIMITED TO SLAB, WALL AND ROOF.
5. REFER TO MEP DRAWINGS FOR REMOVAL OF EXISTING MECHANICAL, ELECTRICAL AND PLUMBING FIXTURES AND EQUIPMENT.
6. REMOVE NOTED EXISTING CEILING SYSTEMS AND ALL ASSOCIATED FIXTURES.
7. REMOVE NOTED EXISTING FINISH FLOORING AND BASE.
8. SEE ENLARGED PLANS FOR DETAILED SCOPE OF WORK.
9. REMOVE ALL EXISTING WALL MOUNTED EQUIPMENT.
10. REMOVE NOTED EXISTING HOLLOW METAL DOORS AND FRAMES. PREPARE EXISTING OPENINGS TO RECEIVE NEW WORK.
11. REMOVE NOTED EXISTING WINDOWS, WINDOW SILLS AND WINDOW TREATEMENTS. PROTECT AND PREPARE OPENINGS TO RECEIVE NEW WORK.
12. DIMENSIONS TO AREAS OF DEMOLITION ARE TO NEW FINISH OPENINGS/CONDITIONS. CONTRACTOR SHALL ACCOUNT FOR THE TOOTHING OR TYING IN OF NEW WORK WHEN DETERMING EXTENTS OF DEMOLTION FOR NEW OPENINGS IN EXISTING CONSTRUCTION.
13. UNUSED OPENINGS IN WALLS, FLOORS, AND ROOFS CAUSED BY THE REMOVAL OF M.E.P. OR OTHER EQUIPMENT THAT IS NOT REPLACED SHALL BE INFILLED TO MATCH ADJACENT CONSTRUCTION AND COORDINATE WITH NEW WORK.
14. FOR CLARITY, NOT ALL ELEMENTS REQUIRING DEMOLITION ARE SHOWN ON PLANS, V.I.F.

GENERAL NOTES (DEMOLITION RCP)

1. PROTECT EXISTING TO REMAIN ITEMS AND FINISHES FROM DAMAGE DURING CONSTRUCTION. PROMPTLY REPAIR DAMAGE CAUSED TO ADJACENT FACILITIES BY DEMOLITION OPERATIONS AT NO COST TO THE GOVERNMENT.
2. REFER TO ENGINEERING DRAWINGS AND SPECIFICATIONS FOR ADDITIONAL DEMOLITION INFORMATION.
3. CEILING ELEVATIONS ARE BASED ON FINISHED FLOOR ELEVATIONS DIRECTLY BELOW MARKED LOCATIONS. VERIFY IN FIELD.
4. MAINTAIN CLEAR AND SAFE EGRESS FOR ALL OCCUPIED SPACES AND ADJACENT AREAS DURING PHASED CONSTRUCTION.

ROOFING NOTES

1. REMOVE EXISTING ROOF SYSTEM AND ASSOCIATED COMPONENTS IN THEIR ENTIRETY DOWN TO EXISTING ROOF DECK. REMOVE SINGLE-PLY ROOFING TO AFFECT THE CONNECTIONS WITH NEW FLASHING OR ROOFING. REMOVE ROOFING SYSTEM AND INSULATION WITHOUT DAMAGING THE ROOF DECK. SEQUENCE WORK TO MINIMIZE BUILDING EXPOSURE BETWEEN DEMOLITION OR DECONSTRUCTION AND NEW ROOF MATERIALS INSTALLATION.
2. INSTALL TEMPORARY ROOFING AND FLASHING AS NECESSARY TO MAINTAIN A WATERTIGHT CONDITION THROUGHOUT THE COURSE OF THE WORK. REMOVE TEMPORARY WORK PRIOR TO INSTALLATION OF PERMANENT ROOF SYSTEM MATERIALS UNLESS APPROVED OTHERWISE BY THE CONTRACTING OFFICER. THE EXISTING DECK AND SUPPORT STRUCTURE IS DETERIORATED WHERE INDICATED, SUCH THAT ABILITY TO SUPPORT FOOT TRAFFIC AND CONSTRUCTION LOADS IS UNKNOWN. MAKE PROVISIONS FOR WORKER SAFETY DURING DEMOLITION, DECONSTRUCTION, AND INSTALLATION OF NEW MATERIALS AS DESCRIBED IN PARAGRAPHS ENTITLED "STATEMENTS" AND "REGULATORY AND SAFETY REQUIREMENTS."

PLAN NORTH TRUE NORTH

0 4' 8' 16' 24'

1/8" = 1'-0"

SYM	DESCRIPTION	DATE	APPR
	Final Design Submission	06/28/2023	

NAVFAC

PROFESSIONAL CERTIFICATION. I CERTIFY THAT THESE DOCUMENTS WERE PREPARED OR APPROVED BY ME AND THAT I AM A DULY LICENSED ARCHITECT UNDER THE LAWS OF THE STATE OF MARYLAND, LICENSE NUMBER 9635, EXPIRATION DATE 8/15/23.

6/28/23 SEAL

MTFA architecture
3200 LANGSTON BOULEVARD, ARLINGTON, VA 22207
(703) 524 - 8616 www.mtfa.net

A/E INFO

APPROVED

FOR COMMANDER NAVFAC

ACTIVITY

FINAL DESIGN SUBMISSION

SATISFACTORY TO DATE

DES MJB DRW CBM CHK BB

PMDM

BRANCH MANAGER

CHIEF ENG/ARCH

FIRE PROTECTION

DEPARTMENT OF THE NAVY
NAVAL FACILITIES ENGINEERING SYSTEMS COMMAND ~ WASHINGTON
PUBLIC WORKS DEPARTMENT, BETHESDA
NAVAL FACILITIES ENGINEERING SYSTEMS COMMAND
NAVAL SUPPORT ACTIVITY BETHESDA, MARYLAND
UNIFORMED SERVICES UNIVERSITY OF THE HEALTH SCIENCES
BETHESDA, MD

Building 76E Roof Garden

LEVEL 2 DEMOLITION PLANS

SCALE: AS NOTED

EPROJECT NO.: 1698751

CONSTR. CONTR. NO.

NAVFAC DRAWING NO.
13148370

SHEET 13 OF 49

AD102

DRAWFORM REVISION: 25 AUGUST 2020

AD102 Final Design Submission 06/28/2023
6/28/2023 2:19:18 PM

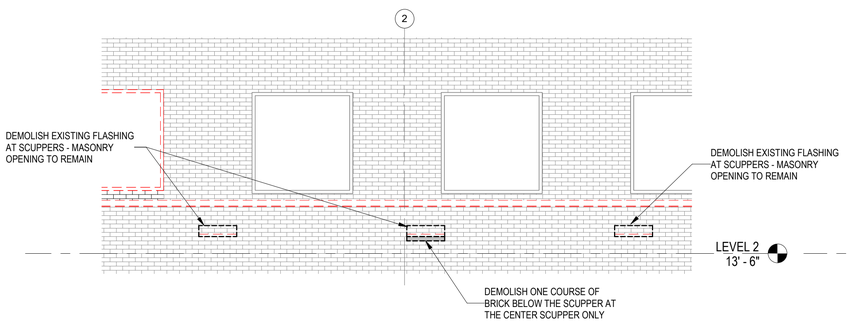

4 A-101 AD301 SCUPPER PARTIAL ELEVATION
SCALE: 1/4" = 1'-0"

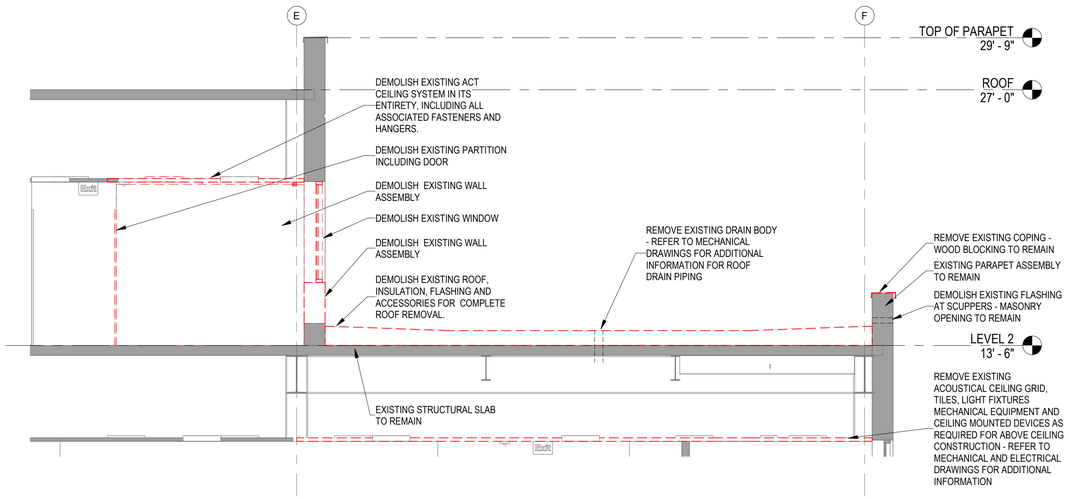

3 AD102 AD301 TRANSVERSAL DEMOLITION SECTION
SCALE: 1/4" = 1'-0"

LEGEND (DEMOLITION)

- EXISTING CONSTRUCTION TO REMAIN
- EXISTING CONSTRUCTION TO BE REMOVED
- NOT IN CONTRACT
- LIMITS OF WORK AREA - REFER TO G-003

GENERAL NOTES (DEMO PLANS)

1. VERIFY ALL DIMENSIONS DESCRIBING EXTENTS OF DEMOLITION WITH ARCHITECT IN FIELD.
2. DIMENSIONS DEMONSTRATE DESIGN INTENT AND SHALL BE COORDINATED WITH ACTUAL CONDITIONS. NOTIFY ARCHITECT IMMEDIATELY OF ANY CONFLICTS WITH EXISTING CONDITIONS.
3. COORDINATE ALL DEMOLITION WITH NEW WORK. NOTIFY ARCHITECT IMMEDIATELY OF ANY CONFLICT.
4. REFER TO STRUCTURAL DRAWINGS FOR REMOVAL OF EXISTING STRUCTURAL BUILDING ELEMENTS INCLUDING BUT NOT LIMITED TO SLAB, WALL AND ROOF.
5. REFER TO MEP DRAWINGS FOR REMOVAL OF EXISTING MECHANICAL, ELECTRICAL AND PLUMBING FIXTURES AND EQUIPMENT.
6. REMOVE NOTED EXISTING CEILING SYSTEMS AND ALL ASSOCIATED FIXTURES.
7. REMOVE NOTED EXISTING FINISH FLOORING AND BASE.
8. SEE ENLARGED PLANS FOR DETAILED SCOPE OF WORK.
9. REMOVE ALL EXISTING WALL MOUNTED EQUIPMENT.
10. REMOVE NOTED EXISTING HOLLOW METAL DOORS AND FRAMES. PREPARE EXISTING OPENINGS TO RECEIVE NEW WORK.
11. REMOVE NOTED EXISTING WINDOWS, WINDOW SILLS AND WINDOW TREATEMENTS. PROTECT AND PREPARE OPENINGS TO RECEIVE NEW WORK.
12. DIMENSIONS TO AREAS OF DEMOLITION ARE TO NEW FINISH OPENINGS/CONDITIONS. CONTRACTOR SHALL ACCOUNT FOR THE TOOTHING OR TYING IN OF NEW WORK WHEN DETERMING EXTENTS OF DEMOLTION FOR NEW OPENINGS IN EXISTING CONSTRUCTION.
13. UNUSED OPENINGS IN WALLS, FLOORS, AND ROOFS CAUSED BY THE REMOVAL OF M.E.P. OR OTHER EQUIPMENT THAT IS NOT REPLACED SHALL BE INFILLED TO MATCH ADJACENT CONSTRUCTION AND COORDINATE WITH NEW WORK.
14. FOR CLARITY, NOT ALL ELEMENTS REQUIRING DEMOLITION ARE SHOWN ON PLANS, V.I.F.

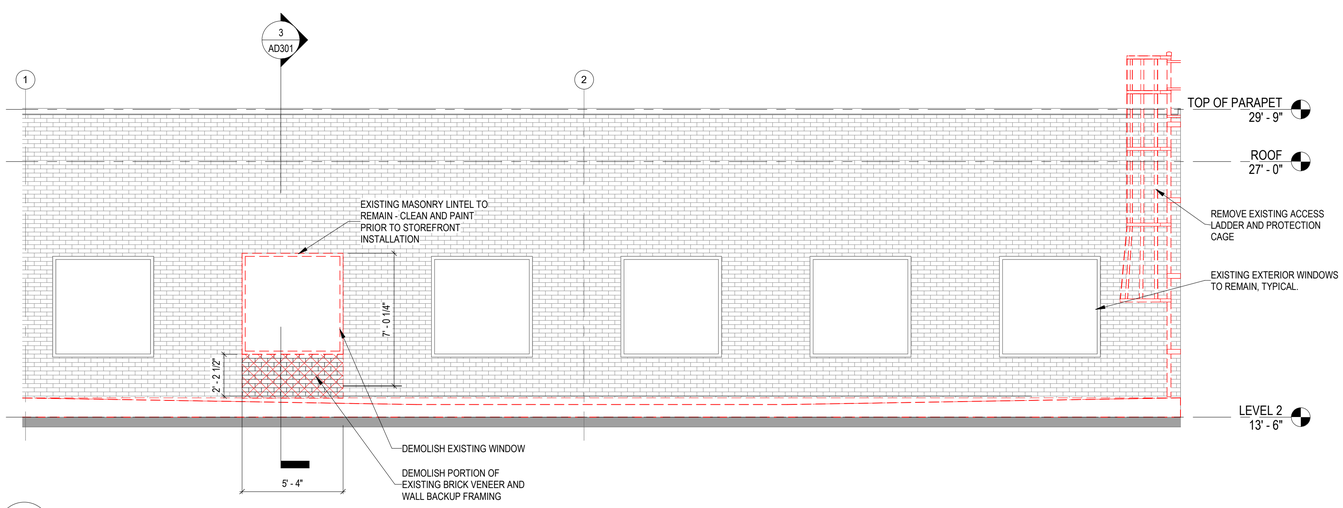

2 AD102 AD301 WEST ELEVATION - DEMOLITION
SCALE: 1/4" = 1'-0"

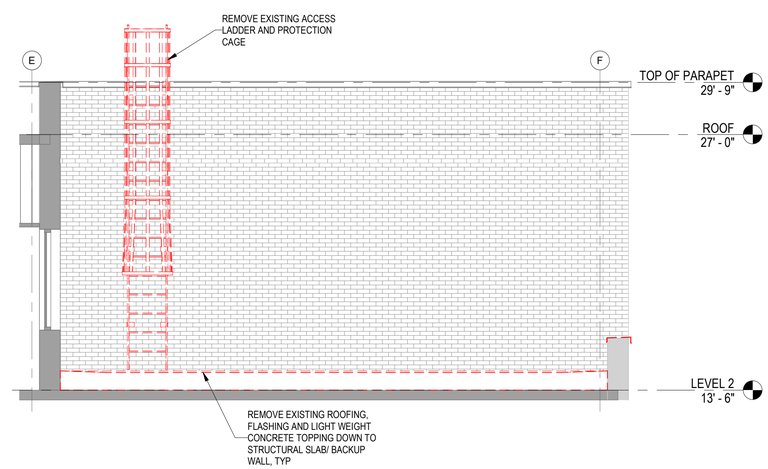

1 AD102 AD301 NORTH ELEVATION - DEMOLITION
SCALE: 1/4" = 1'-0"

0 2' 4' 8' 12'
1/4" = 1'-0"

SYM	DESCRIPTION	DATE	APPR
	Final Design Submission	06/28/2023	

NAVFAC

PROFESSIONAL CERTIFICATION. I CERTIFY THAT THESE DOCUMENTS WERE PREPARED OR APPROVED BY ME AND THAT I AM A DULY LICENSED ARCHITECT UNDER THE LAWS OF THE STATE OF MARYLAND, LICENSE NUMBER 9635, EXPIRATION DATE 8/15/23.

STATE OF MARYLAND JOANNA BIELAK LICENSED ARCHITECT 9635
6/28/23
SEAL

MTFA architecture
3200 LANGSTON BOULEVARD, ARLINGTON, VA 22207
(703) 524 - 6616 www.mtfa.net

A/E INFO

APPROVED

FOR COMMANDER NAVFAC

ACTIVITY
FINAL DESIGN SUBMISSION

SATISFACTORY TO DATE

DES MJB | DRW CBM | CHK BB

PMDM

BRANCH MANAGER

CHIEF ENG/ARCH

FIRE PROTECTION

DEPARTMENT OF THE NAVY
NAVAL FACILITIES ENGINEERING SYSTEMS COMMAND ~ WASHINGTON
PUBLIC WORKS DEPARTMENT BETHESDA
NAVAL FACILITIES ENGINEERING SYSTEMS COMMAND
NAVAL SUPPORT ACTIVITY BETHESDA, MARYLAND
BETHESDA, MD
UNIFORMED SERVICES UNIVERSITY OF THE HEALTH SCIENCES
Building 76E Roof Garden
SECTIONS - DEMO

SCALE: AS NOTED

EPROJECT NO: 1698751

CONSTR. CONTR. NO.

NAVFAC DRAWING NO.
13148371

SHEET 14 OF 49

AD301

DRAWFORM REVISION: 25 AUGUST 2020

AD301 Final Design Submission 06/28/2023
6/28/2023 2:19:19 PM

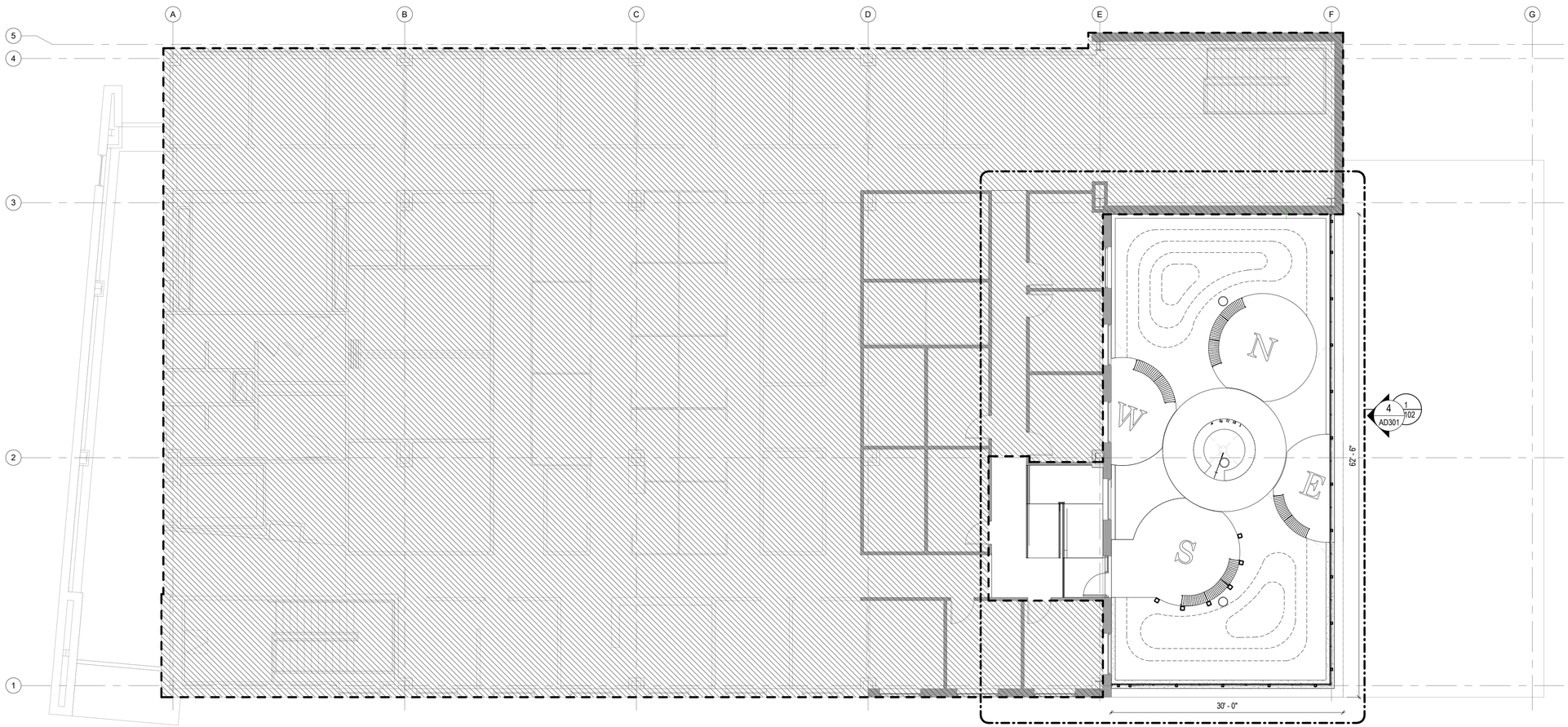

1 A-101 LEVEL 2 - FLOOR PLAN

SCALE: 1/8" = 1'-0"

LEGEND

- EXISTING CONSTRUCTION TO REMAIN
- NEW CONSTRUCTION
- NOT IN CONTRACT

GENERAL NOTES (FLOOR PLANS)

1. IF ANY DISCREPANCY EXISTS BETWEEN THE ARCHITECTURAL AND ENGINEERING DRAWINGS, NOTIFY THE GOVERNMENT PRIOR TO COMMENCEMENT OF WORK. SEE SPECIFICATIONS FOR RFI PROTOCOL.
2. WORK MUST BE DONE IN ACCORDANCE WITH APPLICABLE CODES, ORDINANCES, AND ACCEPTED STANDARDS.
3. IT IS THE RESPONSIBILITY OF THE CONTRACTOR TO INVESTIGATE AND CONFIRM EXISTING CONDITIONS AND TO NOTIFY THE GOVERNMENT OF EXISTING CONDITIONS THAT ARE UNFORESEEN OR ARE DIFFERENT FROM CONDITIONS THAT ARE DEPICTED IN THE CONTRACT DOCUMENTS.
4. REFER TO TELE/DATA/POWER PLAN FOR MORE INFORMATION. COORDINATE WITH GOVERNMENT FOR LOCATIONS AND SEE ENGINEERING FOR SPECIFIC POWER REQUIREMENTS.
5. DOORS WITHOUT NUMBERS ARE EXISTING TO REMAIN (ETR). SEE DOOR SCHEDULE AND HARDWARE IN SPECIFICATIONS FOR INFORMATION REGARDING NEW DOORS.
6. PATCH AND PREP WALLS & FLOORS WHERE PREVIOUS CONSTRUCTION HAS BEEN REMOVED TO ALLOW PROPER INSTALLATION OF FINISHES. CONTRACTOR TO VERIFY IF MOISTURE CONTENT OF EXISTING CONCRETE SLAB IS SUITABLE TO RECEIVE FLOOR FINISH, PER MANUFACTURER'S INSTRUCTION. PREPARE FLOOR SLAB AND FLASH PATCH TO RECEIVE NEW FLOOR FINISH AS SCHEDULED. PROVIDE FLASH PATCHING TRANSITION AS REQUIRED TO ENSURE CONTINUOUS FLOORING. PATCH AND FINISH EXISTING TO REMAIN WALLS AT REMOVED POWER/TELE/DATA OUTLET AND JUNCTION BOX LOCATIONS AND AT AREAS ADJACENT TO DEMOLITION. PATCHING AREA MUST BE CONSISTENT WITH EXISTING ADJACENT CONSTRUCTION, VIF. SEE SPECS FOR DEMOLITION REQUIREMENTS.
7. PROTECT EXISTING TO REMAIN ITEMS AND FINISHES FROM DAMAGE DURING DEMOLITION.
8. SEE FINISH SCHEDULE AND PLAN FOR FINISHES.
9. PROVIDE LIST OF LONG LEAD ITEMS, 8 WEEKS OR MORE, TO GOVERNMENT AT BEGINNING OF PROJECT.
10. REFER TO REFLECTED CEILING PLAN FOR CEILING HEIGHT AND ADDITIONAL INFORMATION.
11. PENETRATIONS THROUGH FLOOR SLAB MUST BE FIRE RATED ASSEMBLIES TO MATCH ADJACENT EXISTING FLOOR CONSTRUCTION RATING, VIF. PROVIDE AND INSTALL FIRE RATED MINIMUM CLOSURE FIRESTOP PLUG OR CONCRETE FILL AT ABANDONED CORE DRILL LOCATIONS. PLUG IS TO MEET ASTM E814 (UL1479) AND CAN/ULC S115 AND BE UL CLASSIFIED. PROVIDE INSULATING FOAM AT FLOOR POKE-THRU AND CORE DRILLS. FOAM TO MATCH FIRE RATING AT ADJACENT CONSTRUCTION, VIF.
12. SEE ENLARGED PLANS FOR DIMENSIONS, PARTITION TYPES, AND MORE INFORMATION IN AREAS SHOWN.
13. WHERE DIMENSIONS ARE OMITTED FROM THE DRAWINGS, LOCATE THE PARTITIONS OR OTHER FEATURES IN SELF-EVIDENT POSITIONS (I.E. ALIGNED W/ THE FACE OF EXISTING PARTITION OR COLUMN, CENTERED ON OPENING, COLUMN, MULLION, OR SPACE ETC.).
14. WHERE WALLS ARE TO ALIGN W/ EXISTING PARTITIONS AND/OR COLUMNS, REMOVE EXISTING CORNER BEAD, TAPE, SPACKLE, AND SAND SMOOTH JOINTS AS NECESSARY TO A POINT ALONG THE EXISTING SURFACE SO THAT THE FINISH IS NOT OBVIOUS.
15. VERTICAL DIMENSIONS MUST BE MADE FROM THE HIGHEST POINT OF THE FLOOR SLAB TO ENSURE PROPER ALIGNMENT OF DOORS, BULKHEADS, ETC.
16. PENETRATIONS THROUGH WALLS MUST BE FIRE RATED ASSEMBLIES TO MATCH ADJACENT EXISTING OR NEW CONSTRUCTION RATING, VIF.
17. REFER TO LANDSCAPE DRAWINGS FOR SOIL DEPTH INFORMATION.

PLAN NORTH

TRUE NORTH

0 4' 8' 16' 24'

1/8" = 1'-0"

SYM	DESCRIPTION	DATE	APPR
	Final Design Submission	06/28/2023	

NAVFAC

PROFESSIONAL CERTIFICATION. I CERTIFY THAT THESE DOCUMENTS WERE PREPARED OR APPROVED BY ME AND THAT I AM A DULY LICENSED ARCHITECT UNDER THE LAWS OF THE STATE OF MARYLAND. LICENSE NUMBER 9635, EXPIRATION DATE 8/15/23.

6/28/23

SEAL

MTFA architecture

3200 LANGSTON BOULEVARD, ARLINGTON, VA 22207
(703) 524 - 6616 www.mtfa.net

A/E INFO

APPROVED

FOR COMMANDER NAVFAC

ACTIVITY

FINAL DESIGN SUBMISSION

SATISFACTORY TO DATE

DES MJB DRW CBM CHK BB

PMDM

BRANCH MANAGER

CHIEF ENG/ARCH

FIRE PROTECTION

DEPARTMENT OF THE NAVY
NAVAL FACILITIES ENGINEERING COMMAND
PUBLIC WORKS DEPARTMENT BETHESDA

NAVAL FACILITIES ENGINEERING SYSTEMS COMMAND ~ WASHINGTON
NAVAL SUPPORT ACTIVITY BETHESDA, MARYLAND

UNIFORMED SERVICES UNIVERSITY OF THE HEALTH SCIENCES BETHESDA, MD

Building 76E Roof Garden

OVERALL FLOOR PLAN - NEW WORK

SCALE: AS NOTED

EPROJECT NO.: 1698751

CONSTR. CONTR. NO.

NAVFAC DRAWING NO.
13148372

SHEET 15 OF 49

A-101

DRAWFORM REVISION: 25 AUGUST 2020

A-101 Final Design Submission 06/28/2023
6/28/2023 2:19:07 PM

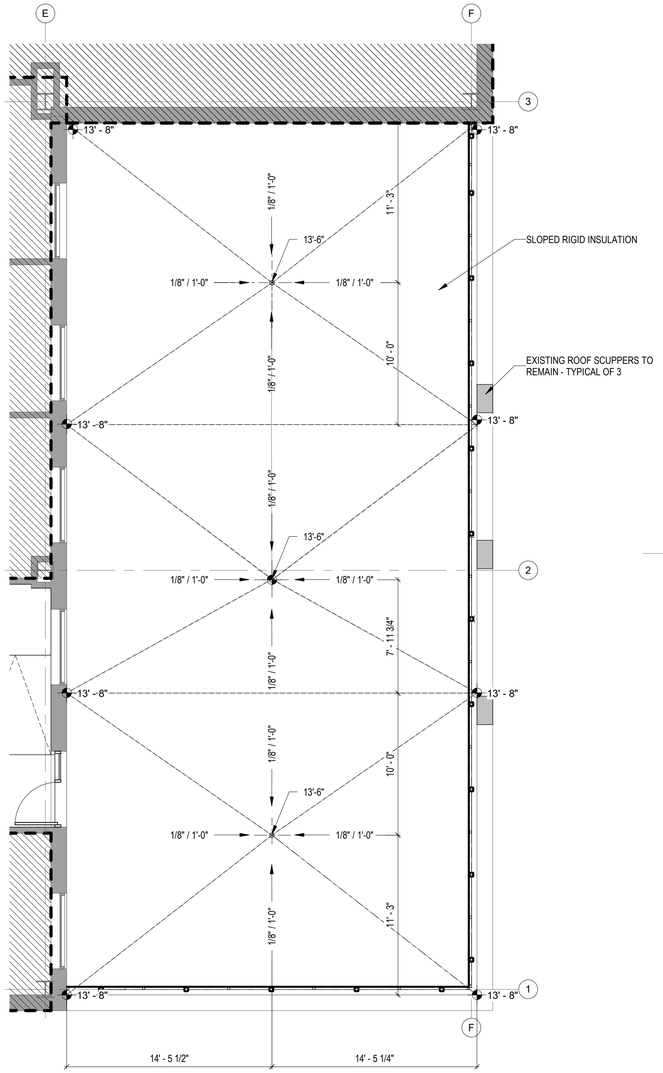

2 A-102 LEVEL 2 - SLOPED ROOF PLAN

SCALE: 3/16" = 1'-0"

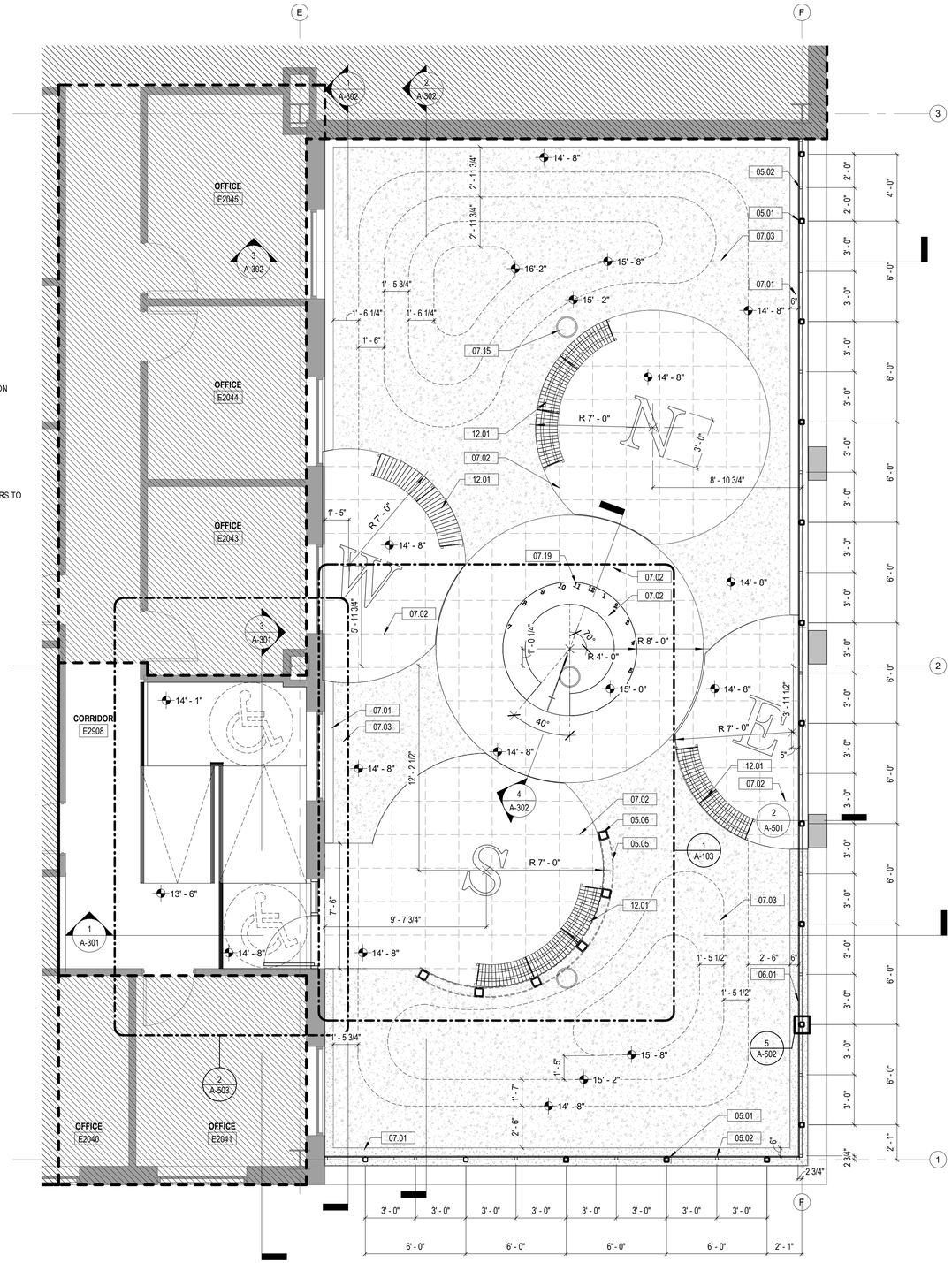

1 A-101 A-102 LEVEL 2 - ENLARGED FLOOR PLAN

SCALE: 1/4" = 1'-0"

LEGEND

- EXISTING CONSTRUCTION TO REMAIN
- NEW CONSTRUCTION
- NOT IN CONTRACT

GENERAL NOTES (FLOOR PLANS)

1. IF ANY DISCREPANCY EXISTS BETWEEN THE ARCHITECTURAL AND ENGINEERING DRAWINGS, NOTIFY THE GOVERNMENT PRIOR TO COMMENCEMENT OF WORK. SEE SPECIFICATIONS FOR RFI PROTOCOL.
2. WORK MUST BE DONE IN ACCORDANCE WITH APPLICABLE CODES, ORDINANCES, AND ACCEPTED STANDARDS.
3. IT IS THE RESPONSIBILITY OF THE CONTRACTOR TO INVESTIGATE AND CONFIRM EXISTING CONDITIONS AND TO NOTIFY THE GOVERNMENT OF EXISTING CONDITIONS THAT ARE UNFORESEEN OR ARE DIFFERENT FROM CONDITIONS THAT ARE DEPICTED IN THE CONTRACT DOCUMENTS.
4. REFER TO TELE/DATA/POWER PLAN FOR MORE INFORMATION. COORDINATE WITH GOVERNMENT FOR LOCATIONS AND SEE ENGINEERING FOR SPECIFIC POWER REQUIREMENTS.
5. DOORS WITHOUT NUMBERS ARE EXISTING TO REMAIN (ETR). SEE DOOR SCHEDULE AND HARDWARE IN SPECIFICATIONS FOR INFORMATION REGARDING NEW DOORS.
6. PATCH AND PREP WALLS & FLOORS WHERE PREVIOUS CONSTRUCTION HAS BEEN REMOVED TO ALLOW PROPER INSTALLATION OF FINISHES. CONTRACTOR TO VERIFY IF MOISTURE CONTENT OF EXISTING CONCRETE SLAB IS SUITABLE TO RECEIVE FLOOR FINISH, PER MANUFACTURER'S INSTRUCTION. PREPARE FLOOR SLAB AND FLASH PATCH TO RECEIVE NEW FLOOR FINISH AS SCHEDULED. PROVIDE FLASH PATCHING TRANSITION AS REQUIRED TO ENSURE CONTINUOUS FLOORING. PATCH AND FINISH EXISTING TO REMAIN WALLS AT REMOVED POWER/TELE/DATA OUTLET AND JUNCTION BOX LOCATIONS AND AT AREAS ADJACENT TO DEMOLITION. PATCHING AREA MUST BE CONSISTENT WITH EXISTING ADJACENT CONSTRUCTION, VIF. SEE SPECS FOR DEMOLITION REQUIREMENTS.
7. PROTECT EXISTING TO REMAIN ITEMS AND FINISHES FROM DAMAGE DURING DEMOLITION.
8. SEE FINISH SCHEDULE AND PLAN FOR FINISHES.
9. PROVIDE LIST OF LONG LEAD ITEMS, 8 WEEKS OR MORE, TO GOVERNMENT AT BEGINNING OF PROJECT.
10. REFER TO REFLECTED CEILING PLAN FOR CEILING HEIGHT AND ADDITIONAL INFORMATION.
11. PENETRATIONS THROUGH FLOOR SLAB MUST BE FIRE RATED ASSEMBLIES TO MATCH ADJACENT EXISTING FLOOR CONSTRUCTION RATING, VIF. PROVIDE AND INSTALL FIRE RATED MINIMUM CLOSURE FIRESTOP PLUG OR CONCRETE FILL AT ABANDONED CORE DRILL LOCATIONS. PLUG IS TO MEET ASTM E814 (UL1479) AND CAN/ULC S115 AND BE UL CLASSIFIED. PROVIDE INSULATING FOAM AT FLOOR POKE-THRU AND CORE DRILLS. FOAM TO MATCH FIRE RATING AT ADJACENT CONSTRUCTION, VIF.
12. SEE ENLARGED PLANS FOR DIMENSIONS, PARTITION TYPES, AND MORE INFORMATION IN AREAS SHOWN.
13. WHERE DIMENSIONS ARE OMITTED FROM THE DRAWINGS, LOCATE THE PARTITIONS OR OTHER FEATURES IN SELF-EVIDENT POSITIONS (I.E. ALIGNED W/ THE FACE OF EXISTING PARTITION OR COLUMN, CENTERED ON OPENING, COLUMN, MULLION, OR SPACE ETC.).
14. WHERE WALLS ARE TO ALIGN W/ EXISTING PARTITIONS AND/OR COLUMNS, REMOVE EXISTING CORNER BEAD, TAPE, SPACKLE, AND SAND SMOOTH JOINTS AS NECESSARY TO A POINT ALONG THE EXISTING SURFACE SO THAT THE FINISH IS NOT OBVIOUS.
15. VERTICAL DIMENSIONS MUST BE MADE FROM THE HIGHEST POINT OF THE FLOOR SLAB TO ENSURE PROPER ALIGNMENT OF DOORS, BULKHEADS, ETC.
16. PENETRATIONS THROUGH WALLS MUST BE FIRE RATED ASSEMBLIES TO MATCH ADJACENT EXISTING OR NEW CONSTRUCTION RATING, VIF.
17. REFER TO LANDSCAPE DRAWINGS FOR SOIL DEPTH INFORMATION.

KEYNOTES

02.08	EXISTING ROOF SCUPPERS TO REMAIN - TYPICAL OF 3
03.03	SLOPED RIGID INSULATION
05.01	HSS 3.5X3.5 - PAINTED - REFER TO STRUCTURAL DRAWINGS FOR ADDITIONAL INFORMATION
05.02	HSS 2X2 - PAINTED - REFER TO STRUCTURAL DRAWINGS FOR ADDITIONAL INFORMATION
05.05	5/8" THICK CURVED PLATES - PAINTED - REFER TO STRUCTURAL DRAWINGS FOR ADDITIONAL INFORMATION
05.06	HSS 6X6 - PAINTED - REFER TO STRUCTURAL DRAWINGS FOR ADDITIONAL INFORMATION
06.01	REDWOOD SCREEN 3/4" THICK X 4" WIDE SLATS WITH 1/2" SPACES BETWEEN BOARDS - ATTACH TO METAL FRAMING WITH STAINLESS STEEL FASTENERS
07.01	RIVER ROCK GRAVEL INFILL - 3/4" MIXED COLORS
07.02	2x2x3/4" THICK IPE PAVERS ON PEDESTALS
07.03	VEGETATIVE ROOF SYSTEM
07.15	ROOF DRAIN WITH STAINLESS STEEL PERFORATED SCREEN ASSEMBLY - REFER TO MECHANICAL DRAWINGS FOR ADDITIONAL INFORMATION
07.19	ETCHED LETTERING IN IPE WOOD PAVERS
12.01	BENCH

PLAN NORTH TRUE NORTH

0 2' 4' 8' 12'

1/4" = 1'-0"

SYM	DESCRIPTION	DATE	APPR
	Final Design Submission	06/28/2023	

NAVFAC

PROFESSIONAL CERTIFICATION. I CERTIFY THAT THESE DOCUMENTS WERE PREPARED OR APPROVED BY ME AND THAT I AM A DULY LICENSED ARCHITECT UNDER THE LAWS OF THE STATE OF MARYLAND, LICENSE NUMBER 9635, EXPIRATION DATE 8/15/23.

6/28/23 SEAL

MTFA architecture
3200 LANGSTON BOULEVARD, ARLINGTON, VA 22207
(703) 524 - 6616 www.mtfa.net

A/E INFO

APPROVED

FOR COMMANDER NAVFAC

ACTIVITY

FINAL DESIGN SUBMISSION

SATISFACTORY TO DATE

DES MJB DRW CBM CHK BB

PM/DM

BRANCH MANAGER

CHIEF ENG/ARCH

FIRE PROTECTION

DEPARTMENT OF THE NAVY
NAVAL FACILITIES ENGINEERING SYSTEMS COMMAND ~ WASHINGTON
PUBLIC WORKS DEPARTMENT BETHESDA
NAVAL FACILITIES ENGINEERING SYSTEMS COMMAND
NAVAL SUPPORT ACTIVITY BETHESDA, MARYLAND
BETHESDA, MD
UNIFORMED SERVICES UNIVERSITY OF THE HEALTH SCIENCES

Building 76E Roof Garden

LEVEL 2 - NEW WORK

SCALE: AS NOTED

EPROJECT NO.: 1698751

CONSTR. CONTR. NO.

NAVFAC DRAWING NO. 13148373

SHEET 16 OF 49

A-102

DRAWFORM REVISION: 25 AUGUST 2020

A-102 Final Design Submission 06/28/2023
6/28/2023 2:19:08 PM

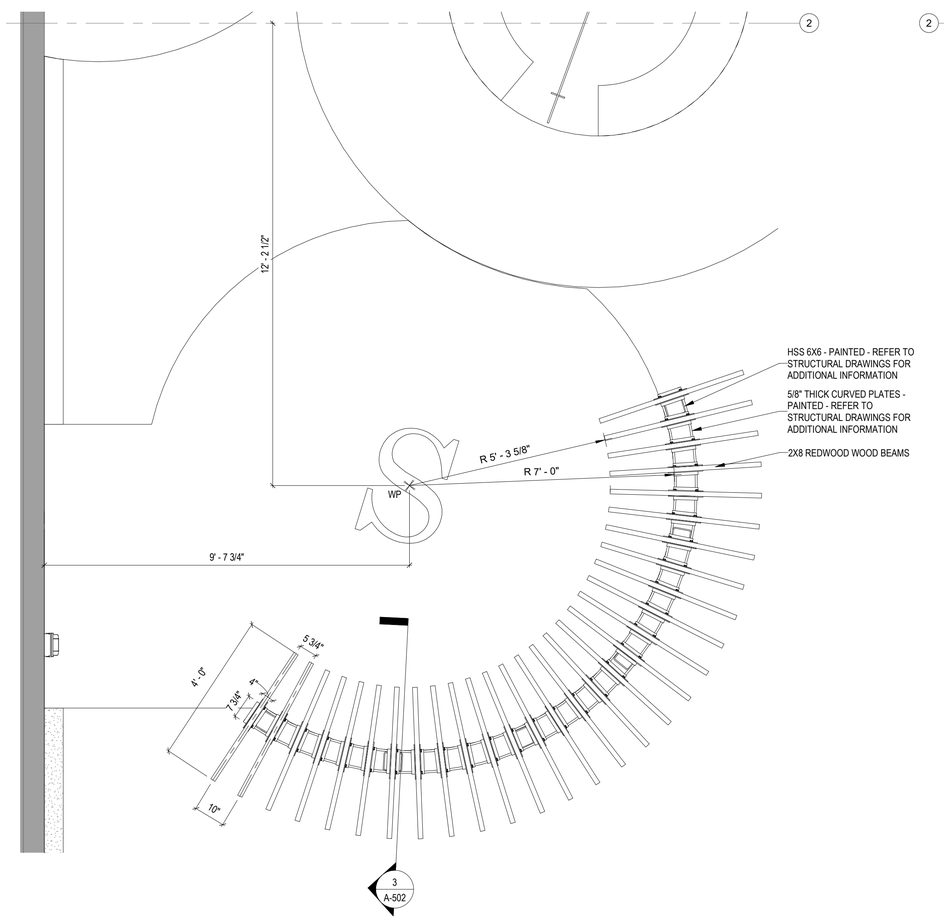

2 A-301 A-103 LEVEL 2 - TRELLIS ENLARGED PLAN - AT TOP

SCALE: 1/2" = 1'-0"

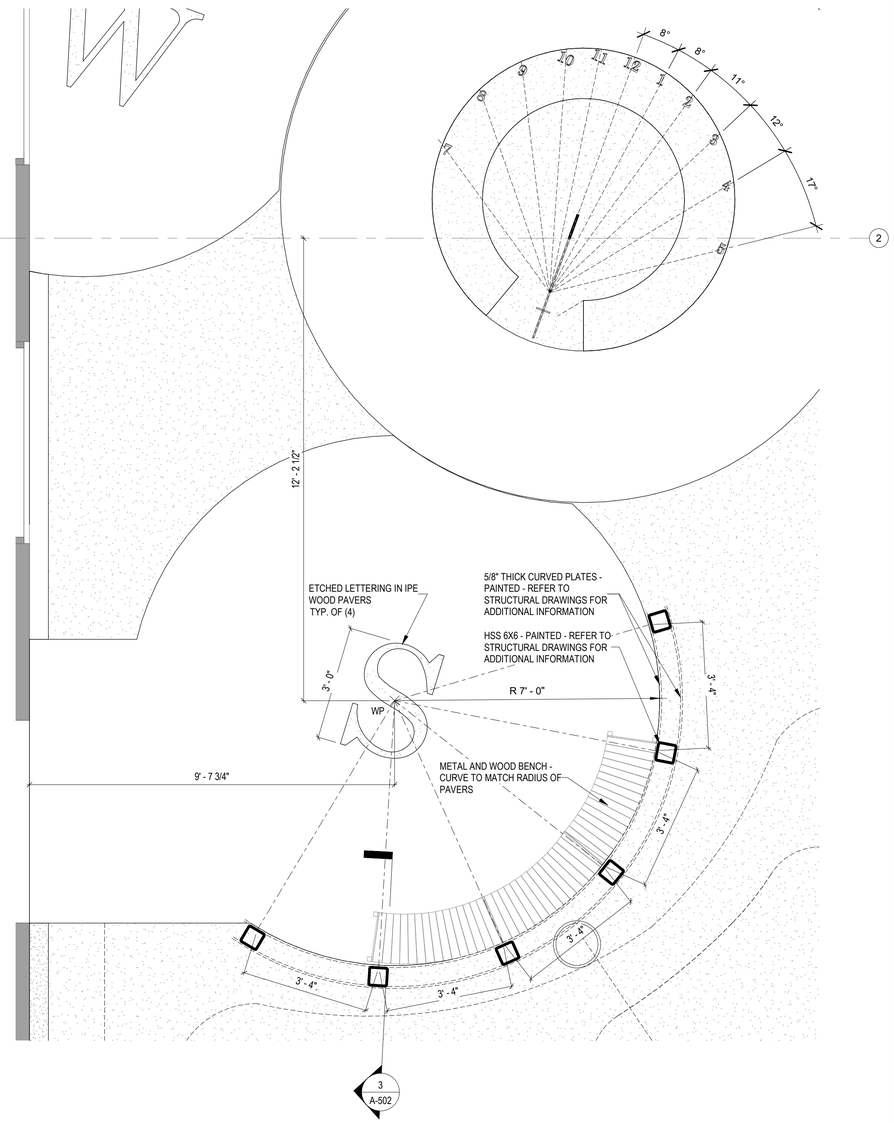

1 A-102 A-103 LEVEL 2 - TRELLIS ENLARGED PLAN

SCALE: 1/2" = 1'-0"

LEGEND

- EXISTING CONSTRUCTION TO REMAIN
- NEW CONSTRUCTION
- NOT IN CONTRACT

GENERAL NOTES (FLOOR PLANS)

1. IF ANY DISCREPANCY EXISTS BETWEEN THE ARCHITECTURAL AND ENGINEERING DRAWINGS, NOTIFY THE GOVERNMENT PRIOR TO COMMENCEMENT OF WORK. SEE SPECIFICATIONS FOR RFI PROTOCOL.
2. WORK MUST BE DONE IN ACCORDANCE WITH APPLICABLE CODES, ORDINANCES, AND ACCEPTED STANDARDS.
3. IT IS THE RESPONSIBILITY OF THE CONTRACTOR TO INVESTIGATE AND CONFIRM EXISTING CONDITIONS AND TO NOTIFY THE GOVERNMENT OF EXISTING CONDITIONS THAT ARE UNFORESEEN OR ARE DIFFERENT FROM CONDITIONS THAT ARE DEPICTED IN THE CONTRACT DOCUMENTS.
4. REFER TO TELE/DATA/POWER PLAN FOR MORE INFORMATION. COORDINATE WITH GOVERNMENT FOR LOCATIONS AND SEE ENGINEERING FOR SPECIFIC POWER REQUIREMENTS.
5. DOORS WITHOUT NUMBERS ARE EXISTING TO REMAIN (ETR). SEE DOOR SCHEDULE AND HARDWARE IN SPECIFICATIONS FOR INFORMATION REGARDING NEW DOORS.
6. PATCH AND PREP WALLS & FLOORS WHERE PREVIOUS CONSTRUCTION HAS BEEN REMOVED TO ALLOW PROPER INSTALLATION OF FINISHES. CONTRACTOR TO VERIFY IF MOISTURE CONTENT OF EXISTING CONCRETE SLAB IS SUITABLE TO RECEIVE FLOOR FINISH, PER MANUFACTURER'S INSTRUCTION. PREPARE FLOOR SLAB AND FLASH PATCH TO RECEIVE NEW FLOOR FINISH AS SCHEDULED. PROVIDE FLASH PATCHING TRANSITION AS REQUIRED TO ENSURE CONTINUOUS FLOORING. PATCH AND FINISH EXISTING TO REMAIN WALLS AT REMOVED POWER/TELE/DATA OUTLET AND JUNCTION BOX LOCATIONS AND AT AREAS ADJACENT TO DEMOLITION. PATCHING AREA MUST BE CONSISTENT WITH EXISTING ADJACENT CONSTRUCTION, VIF. SEE SPECS FOR DEMOLITION REQUIREMENTS.
7. PROTECT EXISTING TO REMAIN ITEMS AND FINISHES FROM DAMAGE DURING DEMOLITION.
8. SEE FINISH SCHEDULE AND PLAN FOR FINISHES.
9. PROVIDE LIST OF LONG LEAD ITEMS, 8 WEEKS OR MORE, TO GOVERNMENT AT BEGINNING OF PROJECT.
10. REFER TO REFLECTED CEILING PLAN FOR CEILING HEIGHT AND ADDITIONAL INFORMATION.
11. PENETRATIONS THROUGH FLOOR SLAB MUST BE FIRE RATED ASSEMBLIES TO MATCH ADJACENT EXISTING FLOOR CONSTRUCTION RATING, VIF. PROVIDE AND INSTALL FIRE RATED MINIMUM CLOSURE FIRESTOP PLUG OR CONCRETE FILL AT ABANDONED CORE DRILL LOCATIONS. PLUG IS TO MEET ASTM E814 (UL1479) AND CAN/ULC S115 AND BE UL CLASSIFIED. PROVIDE INSULATING FOAM AT FLOOR POKE-THRU AND CORE DRILLS. FOAM TO MATCH FIRE RATING AT ADJACENT CONSTRUCTION, VIF.
12. SEE ENLARGED PLANS FOR DIMENSIONS, PARTITION TYPES, AND MORE INFORMATION IN AREAS SHOWN.
13. WHERE DIMENSIONS ARE OMITTED FROM THE DRAWINGS, LOCATE THE PARTITIONS OR OTHER FEATURES IN SELF-EVIDENT POSITIONS (I.E. ALIGNED W/ THE FACE OF EXISTING PARTITION OR COLUMN, CENTERED ON OPENING, COLUMN, MULLION, OR SPACE ETC.).
14. WHERE WALLS ARE TO ALIGN W/ EXISTING PARTITIONS AND/OR COLUMNS, REMOVE EXISTING CORNER BEAD, TAPE, SPACKLE, AND SAND SMOOTH JOINTS AS NECESSARY TO A POINT ALONG THE EXISTING SURFACE SO THAT THE FINISH IS NOT OBVIOUS.
15. VERTICAL DIMENSIONS MUST BE MADE FROM THE HIGHEST POINT OF THE FLOOR SLAB TO ENSURE PROPER ALIGNMENT OF DOORS, BULKHEADS, ETC.
16. PENETRATIONS THROUGH WALLS MUST BE FIRE RATED ASSEMBLIES TO MATCH ADJACENT EXISTING OR NEW CONSTRUCTION RATING, VIF.
17. REFER TO LANDSCAPE DRAWINGS FOR SOIL DEPTH INFORMATION.

PLAN NORTH

TRUE NORTH

0 2' 4' 8' 12'

1/4" = 1'-0"

SYM.	DESCRIPTION	DATE	APPR
	Final Design Submission	06/28/2023	

NAVFAC

PROFESSIONAL CERTIFICATION. I CERTIFY THAT THESE DOCUMENTS WERE PREPARED OR APPROVED BY ME AND THAT I AM A DULY LICENSED ARCHITECT UNDER THE LAWS OF THE STATE OF MARYLAND. LICENSE NUMBER 9635, EXPIRATION DATE 8/15/23.

6/28/23

SEAL

MTFA architecture

3200 LANGSTON BOULEVARD, ARLINGTON, VA 22207
(703) 524 - 8616 www.mtfa.net

A/E INFO

APPROVED

FOR COMMANDER NAVFAC

ACTIVITY

FINAL DESIGN SUBMISSION

SATISFACTORY TO DATE

DES MJB DRW CBM CHK BB

PMDM

BRANCH MANAGER

CHIEF ENG/ARCH

FIRE PROTECTION

DEPARTMENT OF THE NAVY
NAVAL FACILITIES ENGINEERING SYSTEMS COMMAND
PUBLIC WORKS DEPARTMENT, BETHESDA

NAVAL FACILITIES ENGINEERING SYSTEMS COMMAND ~ WASHINGTON
NAVAL SUPPORT ACTIVITY BETHESDA, MARYLAND

UNIFORMED SERVICES UNIVERSITY OF THE HEALTH SCIENCES
BETHESDA, MD

Building 76E Roof Garden

LEVEL 2 - TRELLIS PLAN

SCALE: AS NOTED

EPROJECT NO.: 1698751

CONSTR. CONTR. NO.

NAVFAC DRAWING NO.
13148374

SHEET 17 OF 49

A-103

DRAWFORM REVISION: 25 AUGUST 2020

A-103 Final Design Submission 06/28/2023
6/28/2023 2:19:10 PM

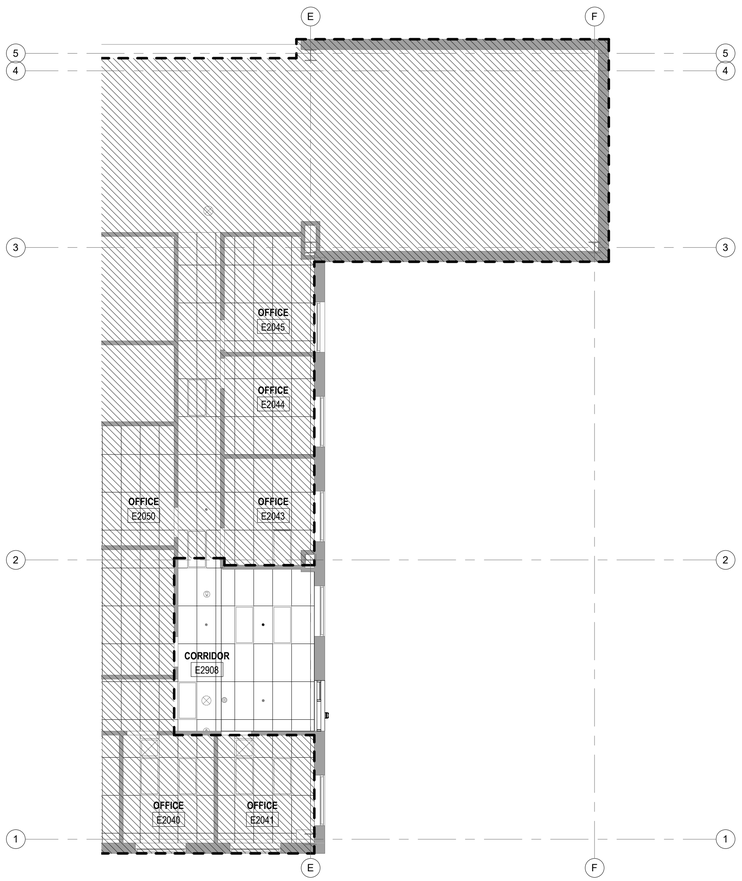

2 A-301 A-111 LEVEL 2 - REFLECTED CEILING PLAN
SCALE: 1/8" = 1'-0"

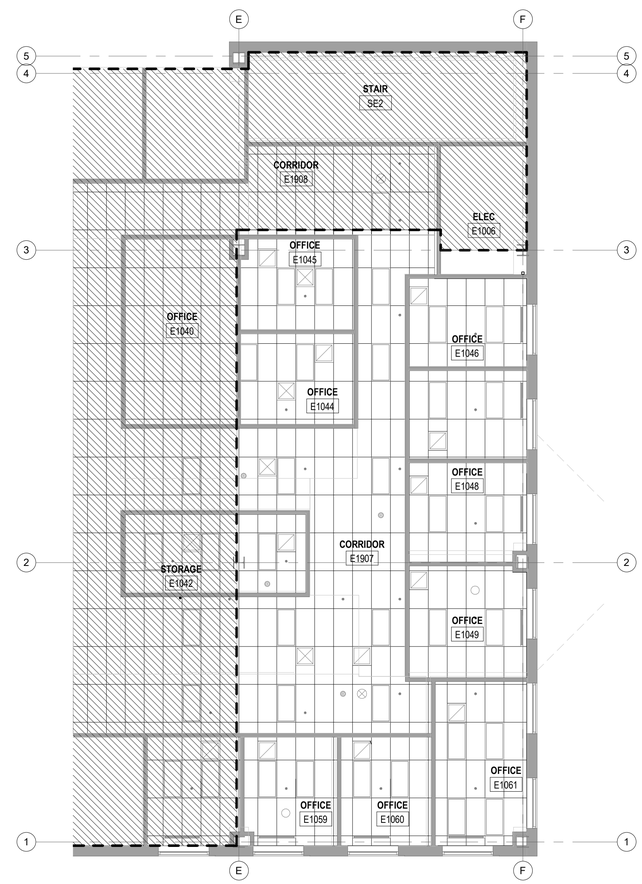

1 A-111 LEVEL 1 - REFLECTED CEILING PLAN
SCALE: 1/8" = 1'-0"

LEGEND

- EXISTING CONSTRUCTION TO REMAIN
- NEW CONSTRUCTION
- NOT IN CONTRACT

GENERAL NOTES (RCP)

1. CEILING ELEVATIONS ARE BASED ON FINISHED FLOOR ELEVATIONS DIRECTLY BELOW MARKED LOCATIONS. VERIFY IN FIELD.
2. REFER TO ENGINEERING DRAWINGS FOR DEMOLITION/ REMOVAL/ RELOCATION/ NEW LOCATIONS OF EXHAUST FANS, EXIT LIGHTS, GRILLES, EMERGENCY LIGHTS, OCCUPANCY SENSORS, CIRCUITRY, SWITCHES, FIRE PROTECTION SYSTEMS INCLUDING FIRE ALARM AND SPRINKLERS, ETC. ARCHITECTURAL REFLECTED CEILING PLANS MAY NOT BE SHOWING ALL CEILING MOUNTED ITEMS AND THE CONTRACTOR IS TO REFER TO RELATED DISCIPLINE DRAWINGS FOR MORE INFORMATION. ARCHITECTURAL REFLECTED CEILING PLANS ARE FOR LOCATION DESIGN INTENT AND LIFE SAFETY ONLY.
3. SEE ENGINEERING DWGS AND SPECIFICATIONS FOR SWITCH AND COVER PLATE COLOR/MATERIAL. SEE ENGINEERING DWGS FOR OCCUPANCY SENSOR SWITCH COLOR REQUIREMENTS. STYLE / COLOR OF SWITCHES AND COVER PLATES TO BE WHITE.
4. SWITCHES MUST BE MOUNTED 4" FROM DOOR JAMB AND 48" MAX AFF TO CENTERLINE OF SWITCH, UON. GANG MULTIPLE SWITCHES WITH SINGLE COVER PLATE.
5. CENTER SPRINKLER HEADS IN THE CEILING TILE, UON. SEE ENGINEERING DWGS FOR MORE INFORMATION.
6. CONTRACTOR MUST VERIFY IN FIELD FOR EXISTING CONDITIONS OF THE AREAS WHERE EXISTING CEILING IS TO REMAIN. PATCH, TOUCH-UP, OR REPLACE DAMAGED CEILING TILES OR GWB CEILINGS AND RELATED ITEMS TO COORDINATE WITH DEMOLITION AND INSTALLATION OF WORK.
7. TEGULAR CEILING TILE MUST BE CUT TO MATCH FACTORY PROFILE EDGE AT PARTITIONS. PAINT EXPOSED EDGE OF TILE TO MATCH CEILING TILE. TILE SHOULD NOT RUN OVER SLAB TO CEILING PARTITIONS.
8. REFER TO REFLECTED CEILING DEMOLITION PLAN, FLOOR PLAN, ENGINEERING DRAWINGS AND SPECIFICATIONS FOR ADDITIONAL INFORMATION.
9. SEE REFLECTED CEILING PLAN LEGEND AND FINISH PLAN FOR CEILING FINISH DESIGNATIONS AND FOR ADDITIONAL FINISH INFORMATION.
10. REFER TO REFLECTED CEILING PLANS FOR CEILING GRID LOCATION/ALIGNMENT.

LEGEND (REFLECTED CEILING PLANS)

- 9' - 0" CEILING HEIGHT AFF
- 2 x 2 ACOUSTIC CEILING TILE
- 1 x 6 ACOUSTIC CEILING TILE
- GWB CEILING SYSTEM
- 2'-0 x 4'-0" RECESSED LIGHT FIXTURE
- 2'-0 x 2'-0" RECESSED LIGHT FIXTURE
- EXIT SIGN
- SD SMOKE DETECTOR
- SUPPLY REGISTER
- RETURN REGISTER
- SPRINKLER HEAD
- SPEAKER
- SECURITY CAMERA
- OS OCCUPANCY SENSOR
- SPEAKER / STROBE

PLAN NORTH

TRUE NORTH

0 4' 8' 16' 24'
1/8" = 1'-0"

SYM	DESCRIPTION	DATE	APPR
	Final Design Submission	06/28/2023	

NAVFAC

PROFESSIONAL CERTIFICATION. I CERTIFY THAT THESE DOCUMENTS WERE PREPARED OR APPROVED BY ME AND THAT I AM A DULY LICENSED ARCHITECT UNDER THE LAWS OF THE STATE OF MARYLAND. LICENSE NUMBER 9635, EXPIRATION DATE 8/15/23.

6/28/23 SEAL

MTFA architecture
3200 LANGSTON BOULEVARD, ARLINGTON, VA 22207
(703) 524 - 8616 www.mtfa.net

A/E INFO

APPROVED

FOR COMMANDER NAVFAC

ACTIVITY
FINAL DESIGN SUBMISSION

SATISFACTORY TO DATE

DES MJB DRW CBM CHK BB

PM/DM

BRANCH MANAGER

CHIEF ENG/ARCH

FIRE PROTECTION

DEPARTMENT OF THE NAVY
NAVAL FACILITIES ENGINEERING SYSTEMS COMMAND ~ WASHINGTON
PUBLIC WORKS DEPARTMENT BETHESDA
NAVAL FACILITIES ENGINEERING SYSTEMS COMMAND
NAVAL SUPPORT ACTIVITY BETHESDA, MARYLAND
UNIFORMED SERVICES UNIVERSITY OF THE HEALTH SCIENCES
BETHESDA, MD
Building 76E Roof Garden
LEVELS 1 & 2 RCP

SCALE: AS NOTED
EPROJECT NO.: 1698751
CONSTR. CONTR. NO.
NAVFAC DRAWING NO. 13148375
SHEET 18 OF 49

A-111

DRAWFORM REVISION: 25 AUGUST 2020

A-111 Final Design Submission 06/28/2023
6/28/2023 2:19:10 PM

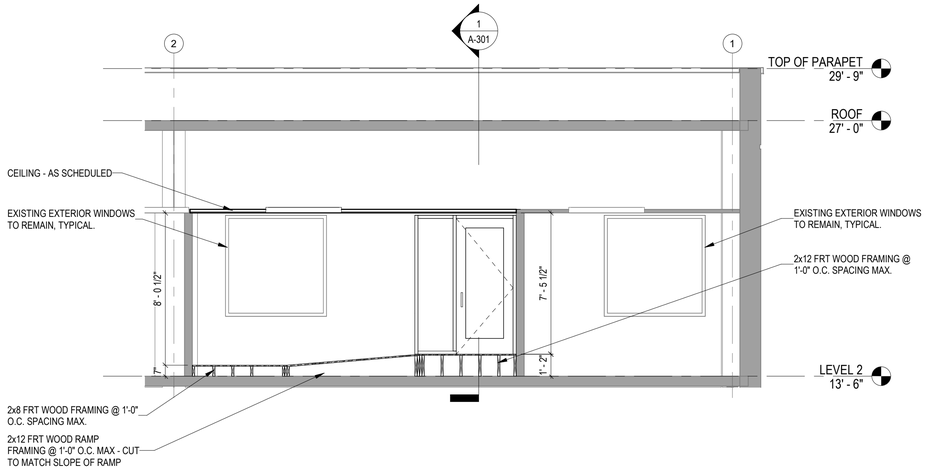

3 A-102 A-301 SECTION THROUGH RAMP / LANDING
SCALE: 1/4" = 1'-0"

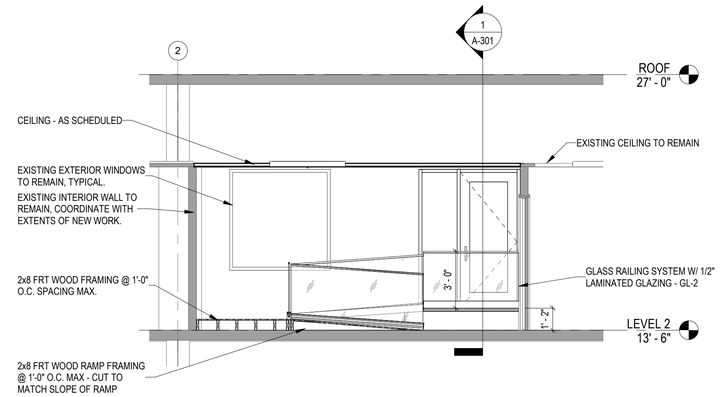

2 A-301 A-301 SECTION THROUGH RAMP / LANDING
SCALE: 1/4" = 1'-0"

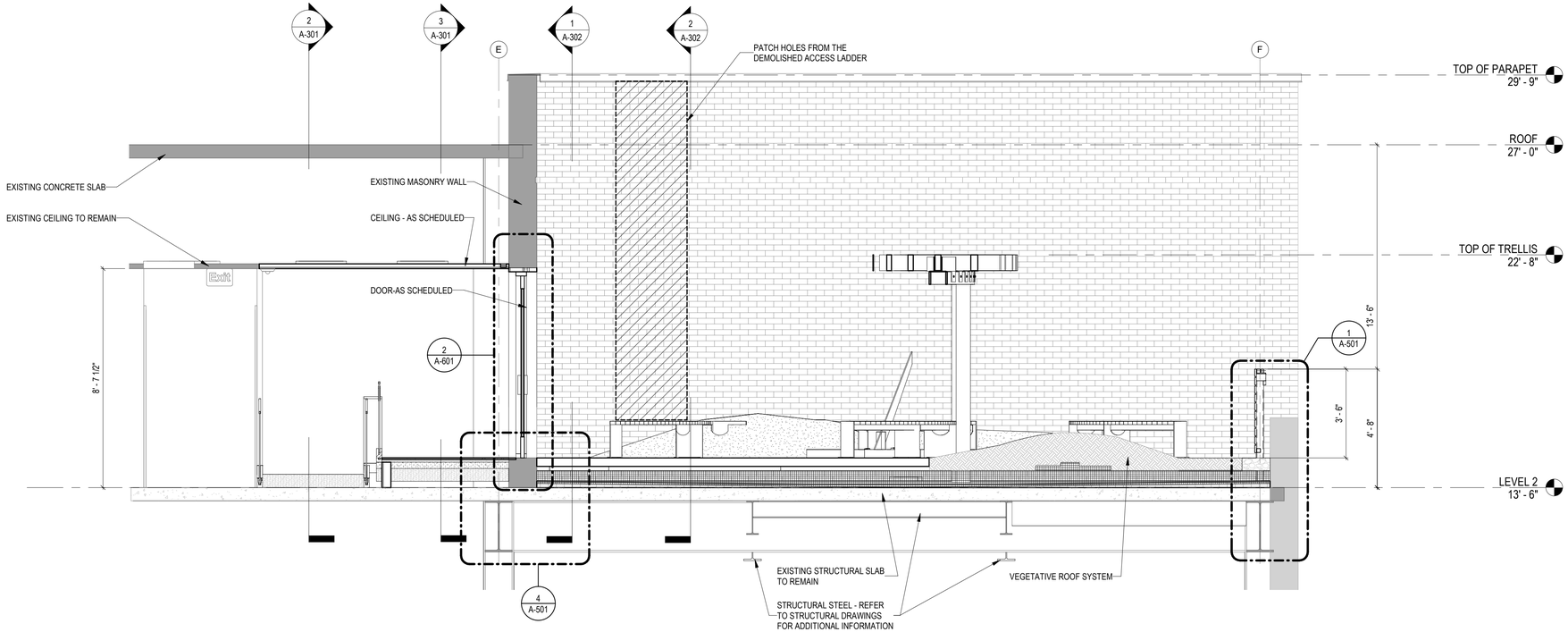

1 A-102 A-301 SECTION AT ROOF
SCALE: 3/8" = 1'-0"

LEGEND

- EXISTING CONSTRUCTION TO REMAIN
- NEW CONSTRUCTION
- NOT IN CONTRACT

SYM.	DESCRIPTION	DATE	APPR
	Final Design Submission	06/28/2023	

NAVFAC

PROFESSIONAL CERTIFICATION. I CERTIFY THAT THESE DOCUMENTS WERE PREPARED OR APPROVED BY ME AND THAT I AM A DULY LICENSED ARCHITECT UNDER THE LAWS OF THE STATE OF MARYLAND, LICENSE NUMBER 9635, EXPIRATION DATE 8/15/23.

6/28/23
SEAL

MTFA architecture
3200 LANGSTON BOULEVARD, ARLINGTON, VA 22207
(703) 524 - 6616 www.mtfa.net

A/E INFO

APPROVED

FOR COMMANDER NAVFAC

ACTIVITY
FINAL DESIGN SUBMISSION

SATISFACTORY TO DATE

DES MJB | DRW CBM | CHK BB

PMDM

BRANCH MANAGER

CHIEF ENG/ARCH

FIRE PROTECTION

DEPARTMENT OF THE NAVY
NAVAL FACILITIES ENGINEERING SYSTEMS COMMAND – WASHINGTON
PUBLIC WORKS DEPARTMENT, BETHESDA
NAVAL FACILITIES ENGINEERING SYSTEMS COMMAND
NAVAL SUPPORT ACTIVITY BETHESDA, MARYLAND
UNIFORMED SERVICES UNIVERSITY OF THE HEALTH SCIENCES
BETHESDA, MD
Building 76E Roof Garden
SECTIONS

SCALE: AS NOTED
EPROJECT NO.: 1698751
CONSTR. CONTR. NO.
NAVFAC DRAWING NO. 13148376
SHEET 19 OF 49
A-301

0 2' 4' 8' 12'
1/4" = 1'-0"
0 2' 4' 6' 8'
3/8" = 1'-0"

DRAWFORM REVISION: 25 AUGUST 2020

A-301 Final Design Submission 06/28/2023
6/28/2023 2:19:11 PM

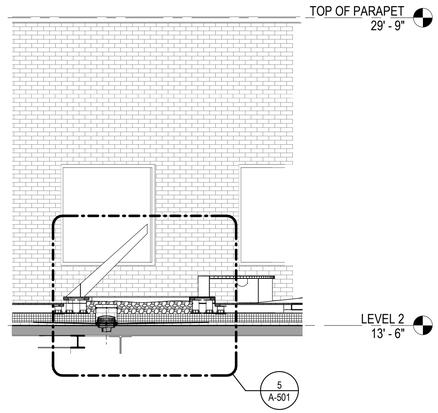

4 A-102 A-302 SECTION THRU SUNDIAL
SCALE: 1/4" = 1'-0"

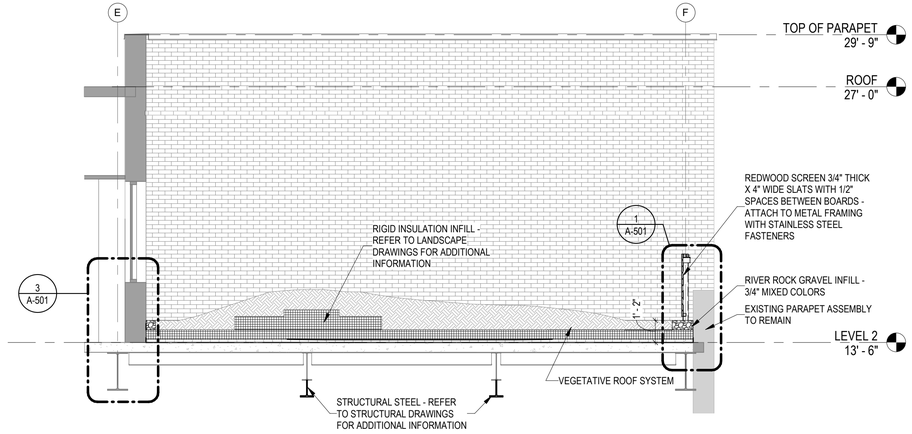

3 A-102 A-302 GREEN ROOF TRANSVERSAL SECTION
SCALE: 1/4" = 1'-0"

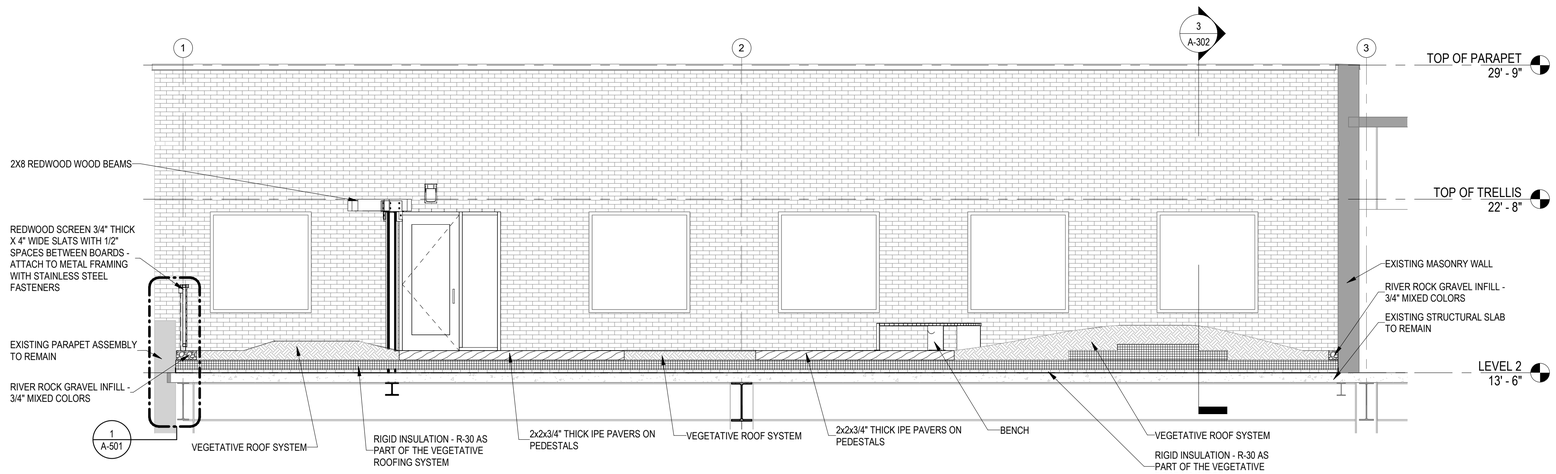

2 A-102 A-302 GREEN ROOF LONGITUDINAL SECTION
SCALE: 1/4" = 1'-0"

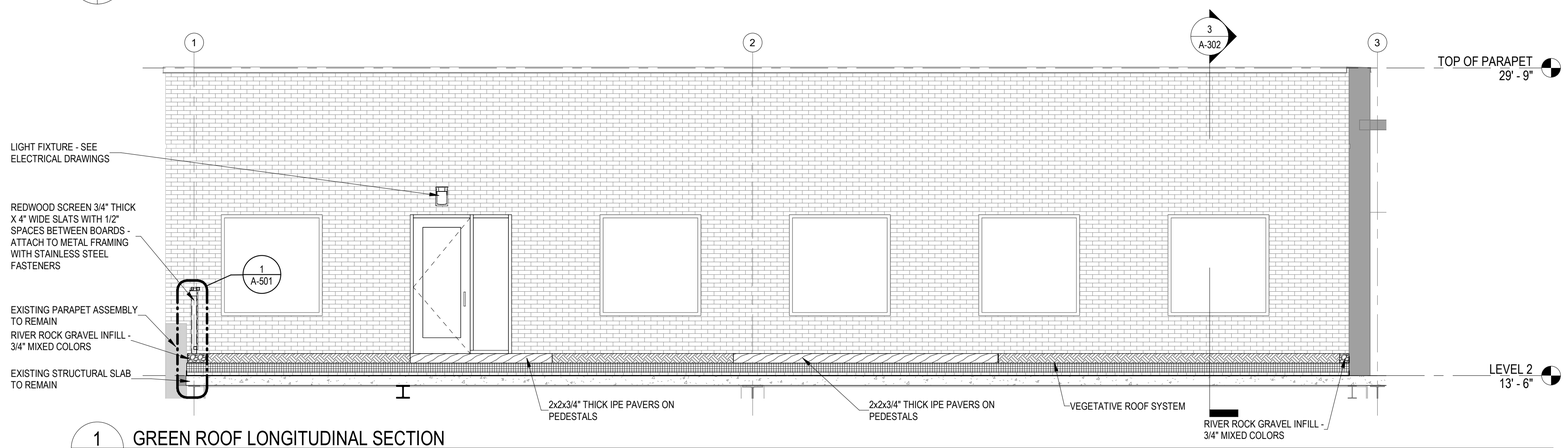

1 A-102 A-302 GREEN ROOF LONGITUDINAL SECTION
SCALE: 1/4" = 1'-0"

LEGEND

- EXISTING CONSTRUCTION TO REMAIN
- NEW CONSTRUCTION
- NOT IN CONTRACT

0 2' 4' 8' 12'
1/4" = 1'-0"

SYM	DESCRIPTION	DATE	APPR
	Final Design Submission	06/28/2023	

NAVFAC

PROFESSIONAL CERTIFICATION. I CERTIFY THAT THESE DOCUMENTS WERE PREPARED OR APPROVED BY ME AND THAT I AM A DULY LICENSED ARCHITECT UNDER THE LAWS OF THE STATE OF MARYLAND, LICENSE NUMBER 9635, EXPIRATION DATE 8/15/23.

6/28/23
SEAL

MTFA architecture
3200 LANGSTON BOULEVARD, ARLINGTON, VA 22207
(703) 524 - 6616 www.mtfa.net

A/E INFO

APPROVED

FOR COMMANDER NAVFAC

ACTIVITY
FINAL DESIGN SUBMISSION

SATISFACTORY TO DATE

DES	MJB	DRW	CBM	CHK	BB

PM/DM
BRANCH MANAGER
CHIEF ENG/ARCH
FIRE PROTECTION

DEPARTMENT OF THE NAVY
NAVAL FACILITIES ENGINEERING SYSTEMS COMMAND ~ WASHINGTON
PUBLIC WORKS DEPARTMENT BETHESDA
NAVAL SUPPORT ACTIVITY BETHESDA, MARYLAND
UNIFORMED SERVICES UNIVERSITY OF THE HEALTH SCIENCES
BETHESDA, MD

Building 76E Roof Garden

SECTIONS

SCALE: AS NOTED
EPROJECT NO: 1698751
CONSTR. CONTR. NO.
NAVFAC DRAWING NO. 13148377
SHEET 20 OF 49

A-302

DRAWFORM REVISION: 25 AUGUST 2020

A-302 Final Design Submission 06/28/2023
6/28/2023 2:19:12 PM

LEGEND

- EXISTING CONSTRUCTION TO REMAIN
- NEW CONSTRUCTION
- NOT IN CONTRACT

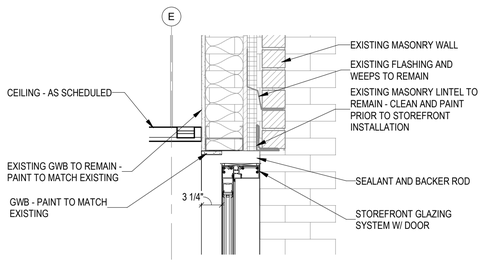

7 A-601 A-501 SECTION AT STOREFRONT DOOR
SCALE: 1" = 1'-0"

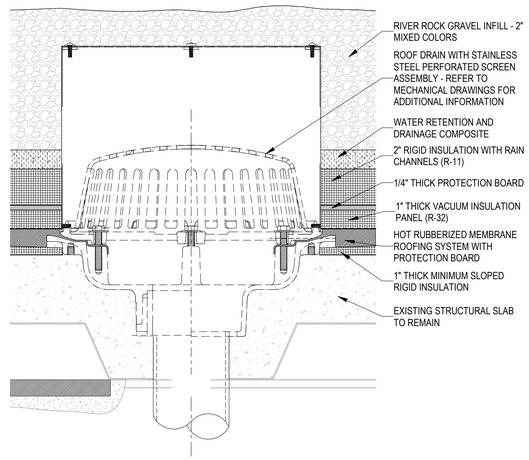

6 A-501 A-501 ENLARGED SECTION @ ROOF DRAIN
SCALE: 3" = 1'-0"

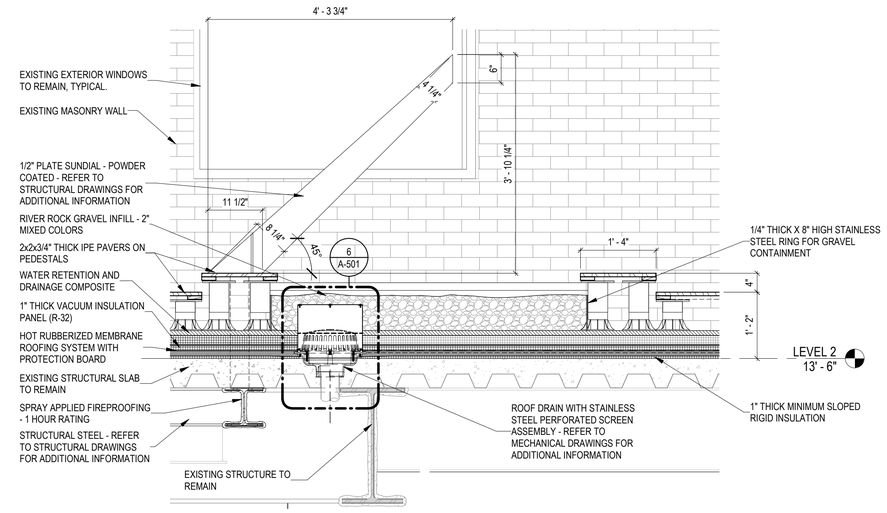

5 A-302 A-501 ENLARGED SECTION THRU SUNDIAL
SCALE: 3/4" = 1'-0"

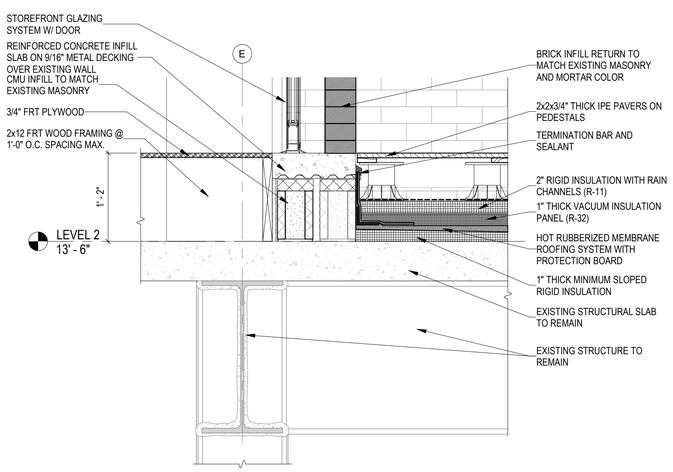

4 A-301 A-501 DOOR THRESHOLD DETAIL
SCALE: 1" = 1'-0"

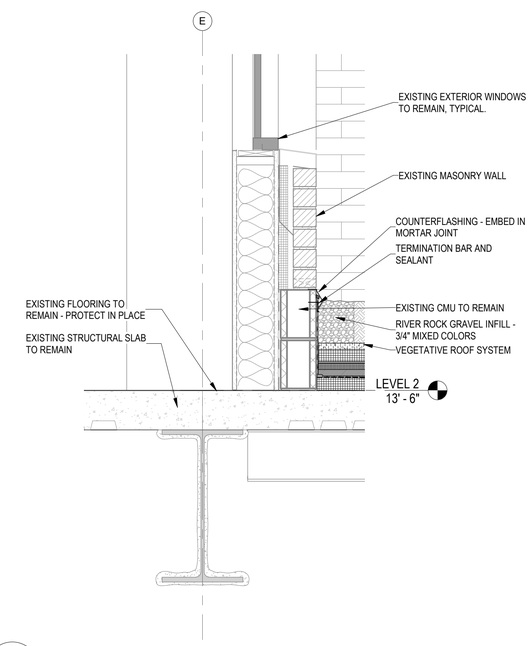

3 A-302 A-501 WALL SECTION AT WINDOW
SCALE: 1" = 1'-0"

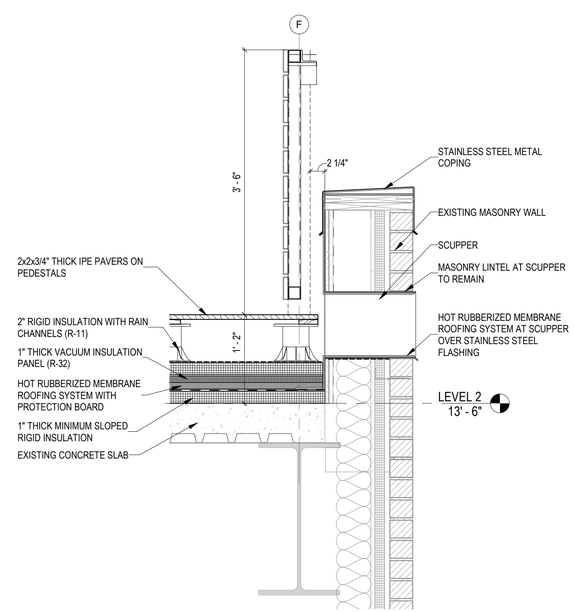

2 A-102 A-501 SCUPPER DETAIL
SCALE: 1" = 1'-0"

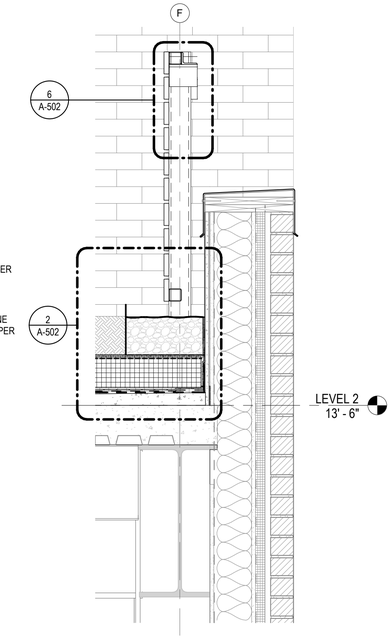

1 A-301 A-501 FENCE DETAIL
SCALE: 1" = 1'-0"

0 1' 2' 3'
1" = 1'-0"
0 3" 6" 9" 12"
3" = 1'-0"

SYM.	DESCRIPTION	DATE	APPR
	Final Design Submission	06/28/2023	

NAVFAC

PROFESSIONAL CERTIFICATION. I CERTIFY THAT THESE DOCUMENTS WERE PREPARED OR APPROVED BY ME AND THAT I AM A DULY LICENSED ARCHITECT UNDER THE LAWS OF THE STATE OF MARYLAND, LICENSE NUMBER 9635, EXPIRATION DATE 8/15/23.

6/28/23
SEAL

MTFA architecture
3200 LANGSTON BOULEVARD, ARLINGTON, VA 22207
(703) 524 - 8616 www.mtfa.net

A/E INFO

APPROVED

FOR COMMANDER NAVFAC

ACTIVITY
FINAL DESIGN SUBMISSION

SATISFACTORY TO DATE

DES MJB DRW CBM CHK BB

PM/DM

BRANCH MANAGER

CHIEF ENG/ARCH

FIRE PROTECTION

DEPARTMENT OF THE NAVY
NAVAL FACILITIES ENGINEERING SYSTEMS COMMAND ~ WASHINGTON
PUBLIC WORKS DEPARTMENT BETHESDA
NAVAL FACILITIES ENGINEERING SYSTEMS COMMAND
NAVAL SUPPORT ACTIVITY BETHESDA, MARYLAND
BETHESDA, MD
UNIFORMED SERVICES UNIVERSITY OF THE HEALTH SCIENCES
Building 76E Roof Garden
DETAILS

SCALE: AS NOTED
EPROJECT NO.: 1698751
CONSTR. CONTR. NO.
NAVFAC DRAWING NO. 13148378
SHEET 21 OF 49

A-501

DRAWFORM REVISION: 25 AUGUST 2020

A-501 Final Design Submission 06/28/2023
6/28/2023 2:19:14 PM

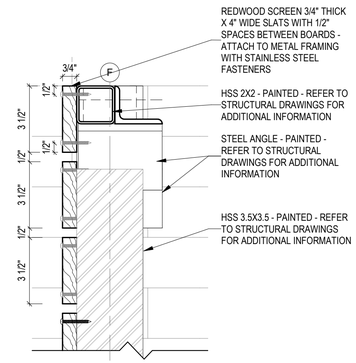

6 A-501 A-502 GUARDRAIL SECTION - TOP
SCALE: 3" = 1'-0"

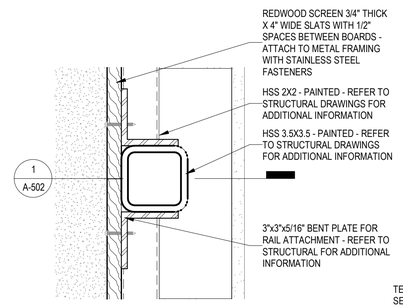

5 A-102 A-502 PLAN DETAIL - GUARDRAIL POST
SCALE: 3" = 1'-0"

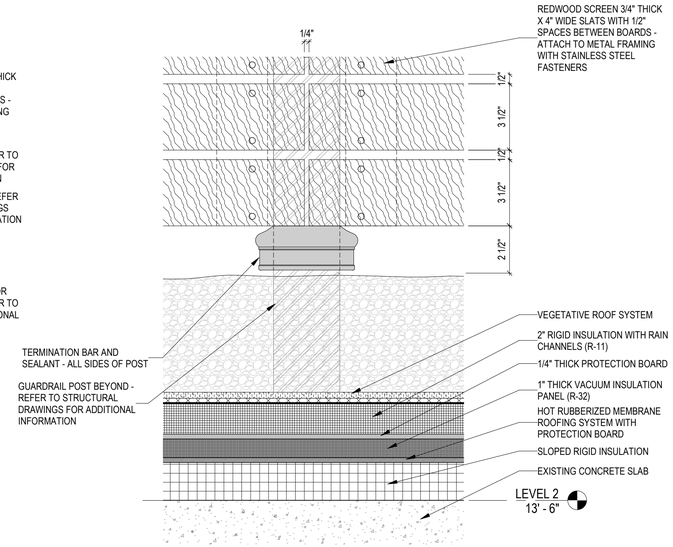

4 A-502 GUARDRAIL POST BASE DETAIL
SCALE: 3" = 1'-0"

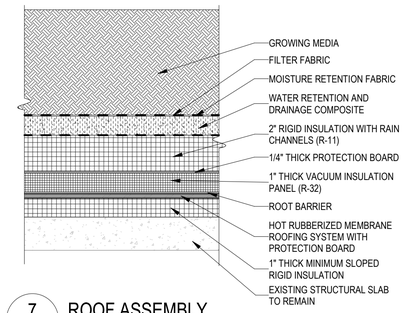

7 A-502 ROOF ASSEMBLY
SCALE: 3" = 1'-0"

LEGEND

- EXISTING CONSTRUCTION TO REMAIN
- NEW CONSTRUCTION
- NOT IN CONTRACT

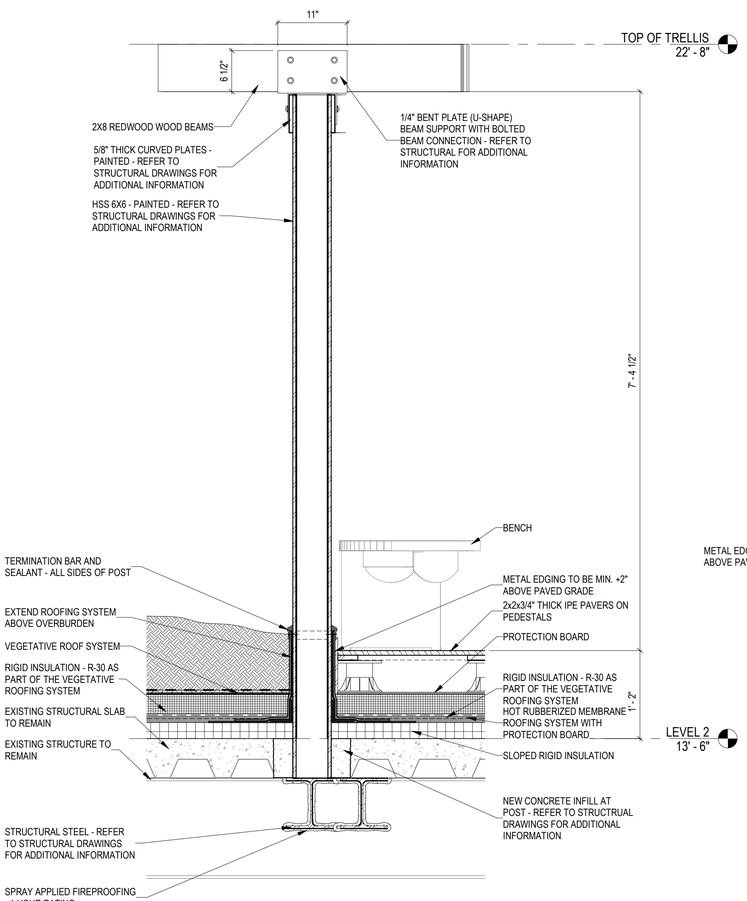

3 A-103 A-502 TRELLIS SECTION
SCALE: 1" = 1'-0"

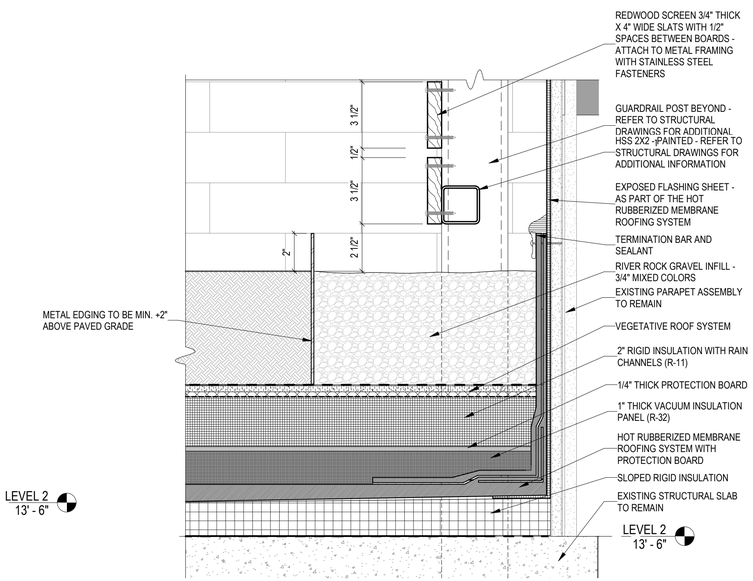

2 A-501 A-502 GUARDRAIL DETAIL
SCALE: 3" = 1'-0"

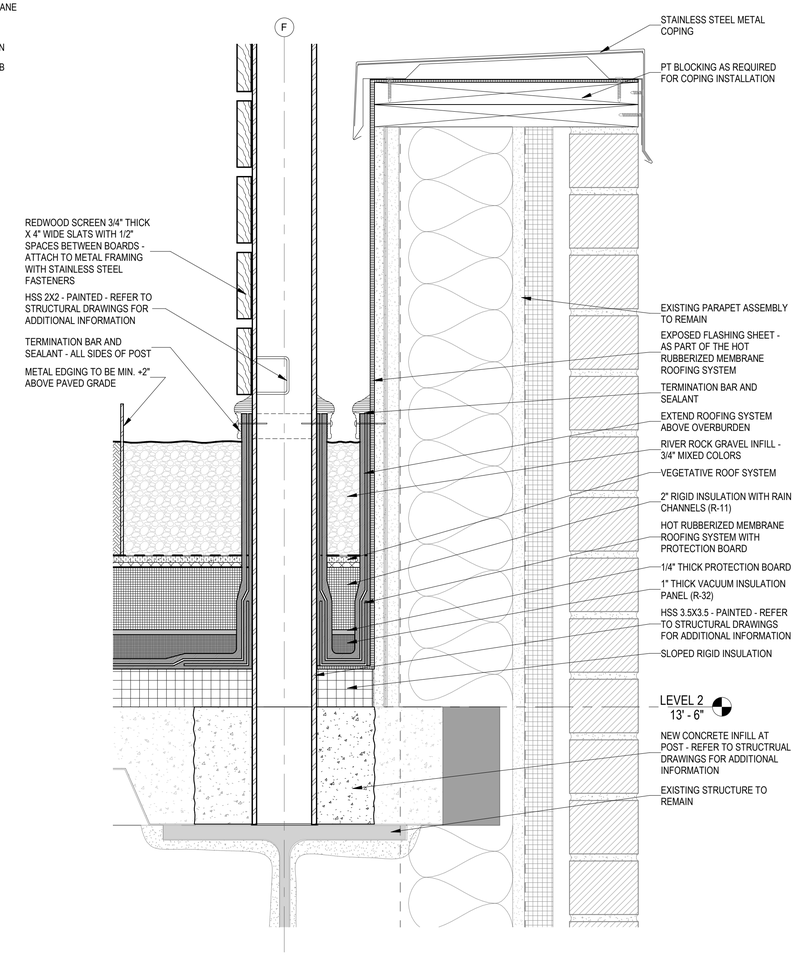

1 A-502 A-502 GUARDRAIL POST BASE DETAIL
SCALE: 3" = 1'-0"

0 1' 2' 3'
1" = 1'-0"
0 3" 6" 9" 12"
3" = 1'-0"

SYM	DESCRIPTION	DATE	APPR
	Final Design Submission	06/28/2023	

NAVFAC

PROFESSIONAL CERTIFICATION. I CERTIFY THAT THESE DOCUMENTS WERE PREPARED OR APPROVED BY ME AND THAT I AM A DULY LICENSED ARCHITECT UNDER THE LAWS OF THE STATE OF MARYLAND, LICENSE NUMBER 9635, EXPIRATION DATE 8/15/23.

6/28/23
SEAL

MTFA architecture
3200 LANGSTON BOULEVARD, ARLINGTON, VA 22207
(703) 524 - 6616 www.mtfa.net

A/E INFO

APPROVED

FOR COMMANDER NAVFAC

ACTIVITY
FINAL DESIGN SUBMISSION

SATISFACTORY TO DATE

DES MJB DRW CBM CHK BB

PMDM

BRANCH MANAGER

CHIEF ENG/ARCH

FIRE PROTECTION

DEPARTMENT OF THE NAVY
NAVAL FACILITIES ENGINEERING SYSTEMS COMMAND ~ WASHINGTON
PUBLIC WORKS DEPARTMENT BETHESDA
NAVAL SUPPORT ACTIVITY BETHESDA, MARYLAND
UNIFORMED SERVICES UNIVERSITY OF THE HEALTH SCIENCES
BETHESDA, MD

NAVAL FACILITIES ENGINEERING SYSTEMS COMMAND

Building 76E Roof Garden

DETAILS

SCALE: AS NOTED
EPROJECT NO.: 1698751
CONSTR. CONTR. NO.
NAVFAC DRAWING NO.
13148379
SHEET 22 OF 49

A-502

DRAWFORM REVISION: 25 AUGUST 2020

A-502 Final Design Submission 06/28/2023
6/28/2023 2:19:15 PM

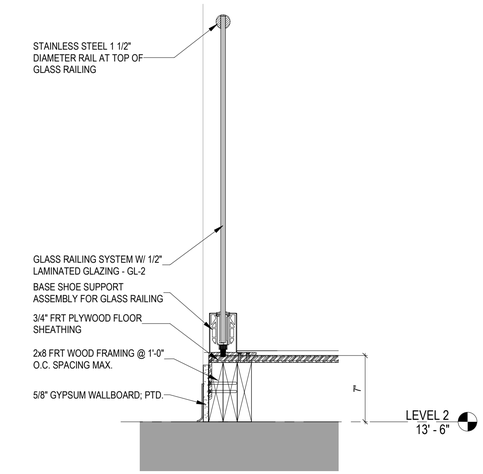

4 A-503 A-503 GLASS HANDRAIL SECTION
SCALE: 1 1/2" = 1'-0"

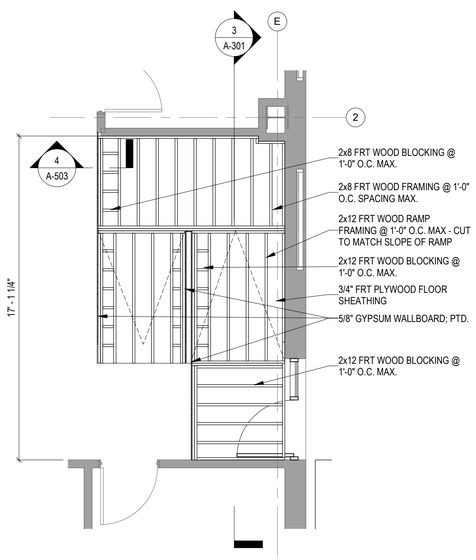

3 A-503 LEVEL 2 - RAMP FRAMING PLAN
SCALE: 1/4" = 1'-0"

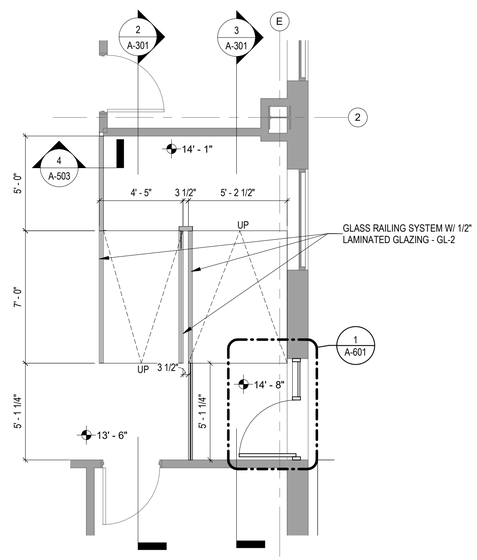

2 A-102 A-503 LEVEL 2 - RAMP ENLARGED PLAN
SCALE: 1/4" = 1'-0"

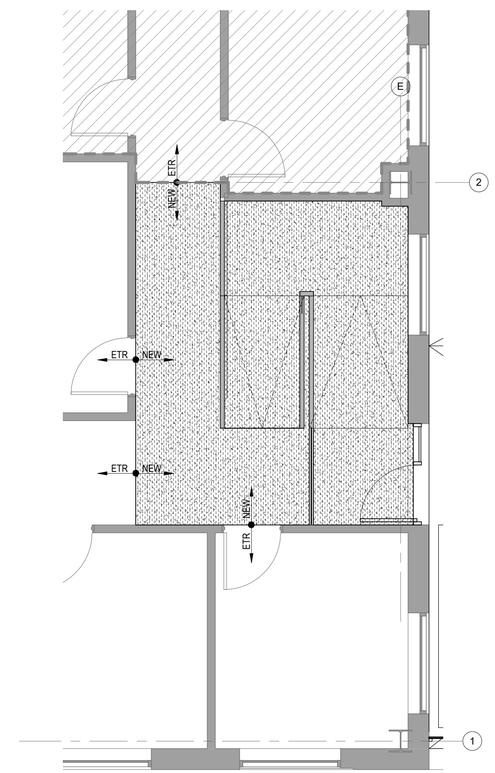

1 A-503 LEVEL 2 - FINISH PLAN
SCALE: 1/4" = 1'-0"

GENERAL NOTES (FINISH PLANS)

1. WORK MUST BE DONE IN ACCORDANCE WITH APPLICABLE CODES, ORDINANCES, AND ACCEPTED STANDARDS.
2. SEE FINISH SCHEDULE FOR FINISHES AND FINISH PLAN FOR FINISH LOCATIONS.
3. CUT FLOOR FINISHES NEATLY AROUND PARTITIONS AND FIXTURES.
4. FINISHES MUST COMPLY WITH IBC 2018, CHAPTER 8 "INTERIOR FINISHES" AND TABLE 803.11 INTERIOR WALL AND CEILING FINISH REQUIREMENTS BY OCCUPANCY AND/OR SECTIONS 804 SMOKE/FLAME REQUIREMENTS.
5. CONFIRM COLOR AND STYLE/PATTERN SELECTIONS OF FINISHES WITH GOVERNMENT PRIOR TO PURCHASE AND INSTALLATION. PROVIDE SHOP SUBMITTALS INCLUDING CUT SHEETS, PRODUCT DATA AND SAMPLES TO GOVERNMENT PER DIVISION 1 SPECIFICATIONS, SECTION 013300 "SUBMITTAL PROCEDURES" FOR APPROVAL PRIOR TO PROCUREMENT.
6. STANDARD PAINT FINISH ON PARTITIONS MUST BE EGGSHELL SHEEN PAINT, UON.
7. CARPET AND FLOORING ADHESIVE MUST BE LOW/NO VOC. SEE SPECIFICATIONS FOR MORE INFORMATION REGARDING MAXIMUM VOC CONTENT.
8. FLOORING MATERIALS MUST COMPLY WITH NFPA 101, SECTION 7.1.6.4 "WALKING SURFACES MUST BE SLIP RESISTANT UNDER FORESEEABLE CONDITIONS. THE WALKING SURFACE OF EACH ELEMENT IN THE MEANS OF EGRESS SHALL BE UNIFORMLY SLIP RESISTANT ALONG THE NATURAL PATH OF TRAVEL".
9. REFER TO INTERIOR ELEVATIONS AND REFLECTED CEILING PLANS FOR MORE INFORMATION ON FINISH LOCATIONS AND ACOUSTICAL CEILING TYPES, ETC.
10. PROVIDE SEAMING / MODULAR LAYOUT DIAGRAMS FOR APPROVAL PRIOR TO FLOORING PURCHASE. VERIFY PATTERN IS INSTALLED WITH NO INTERRUPTIONS.
11. IMMEDIATELY INVESTIGATE LEAD TIMES OF FINISHES AND COORDINATE PROCUREMENT ACCORDINGLY.
12. PAINTED SURFACES MUST BE CLEAN AND PROPERLY CAULKED, FILLED, ETC., PREPARED SMOOTH AND FLUSH.
13. USE PAINTS SPECIFICALLY PRODUCED FOR SURFACE ON WHICH THEY ARE TO BE APPLIED. NOTIFY THE GOVERNMENT FOR PAINT THAT IS INCOMPATIBLE WITH THE SURFACE ON WHICH IT IS APPLIED.
14. SEE ENGINEERING SPECIFICATION FOR OUTLET DEVICES AND COVER PLATE INFORMATION.
15. EXISTING WALLS IN THE RENOVATED AREAS TO REMAIN MUST BE REPAIRED / PATCHED AND PAINTED.
16. ALL WALLS TO RECEIVE PT-1 UNLESS NOTED OTHERWISE, REFER TO FINISH SCHEDULE.

LEGEND (FINISH PLAN)

- EXISTING CONSTRUCTION TO REMAIN
- NEW CONSTRUCTION
- NOT IN CONTRACT
- DIRECTION OF GRAIN/PATTERN
- NEW ETR — START STOP DELINEATION FOR NEW AND EXISTING TO REMAIN (ETR) FINISHES (UNLESS NOTED OTHERWISE)
- S# — FLOOR FINISH CHANGE - REFER TO SILL/THRESHOLD DETAILS ON SHEET A-602

SYMBOL	DESCRIPTION	REMARKS
CPT-1	MATERIAL: CARPET TILE MFR: MATCH EXISTING STYLE: MATCH EXISTING COLOR: MATCH EXISTING INSTALL METHOD: MATCH EXISTING	COMMERCIAL GRADE SYNTHETIC SQUARE TILE, 24" X 24"
VB-1	MATERIAL: VINYL BASE MFR: ARMSTRONG COLOR: MATCH EXISTING	4" COVE BASE THROUGHOUT, UON COIL TYPE, TYP. TYPE TP
P-1	MATERIAL: PAINT - WALL MFR: SHERWIN WILLIAMS COLOR: MATCH EXISTING	LOCATIONS THROUGHOUT SUITE SEE PLAN FOR LOCATIONS WALL FINISH: EGGSHELL

PLAN NORTH TRUE NORTH

0 2' 4' 8' 12'
1/4" = 1'-0"
0 1/2' 1' 1 1/2' 2'
1 1/2" = 1'-0"

SYM	DESCRIPTION	DATE	APPR
	Final Design Submission	06/28/2023	

NAVFAC

PROFESSIONAL CERTIFICATION. I CERTIFY THAT THESE DOCUMENTS WERE PREPARED OR APPROVED BY ME AND THAT I AM A DULY LICENSED ARCHITECT UNDER THE LAWS OF THE STATE OF MARYLAND, LICENSE NUMBER 9635, EXPIRATION DATE 8/15/23.

6/28/23
SEAL

MTFA architecture
3200 LANGSTON BOULEVARD, ARLINGTON, VA 22207
(703) 524 - 8616 www.mtfa.net

A/E INFO

APPROVED

FOR COMMANDER NAVFAC

ACTIVITY
FINAL DESIGN SUBMISSION

SATISFACTORY TO DATE

DES MJB DRW CBM CHK BB

PMDM

BRANCH MANAGER

CHIEF ENG/ARCH

FIRE PROTECTION

DEPARTMENT OF THE NAVY
NAVAL FACILITIES ENGINEERING SYSTEMS COMMAND ~ WASHINGTON
PUBLIC WORKS DEPARTMENT, BETHESDA
NAVAL FACILITIES ENGINEERING SYSTEMS COMMAND
NAVAL SUPPORT ACTIVITY BETHESDA, MARYLAND
UNIFORMED SERVICES UNIVERSITY OF THE HEALTH SCIENCES
BETHESDA, MD
Building 76E Roof Garden
RAMP PLANS AND DETAILS

SCALE: AS NOTED
EPROJECT NO.: 1698751
CONSTR. CONTR. NO.
NAVFAC DRAWING NO. 13148380
SHEET 23 OF 49
A-503

DRAWFORM REVISION: 25 AUGUST 2020

A-503 Final Design Submission 06/28/2023
6/28/2023 2:19:16 PM

DOOR SCHEDULE

DOOR NO.	ROOM NAME	DOOR WIDTH	DOOR HEIGHT	DOOR THICKNESS	DOOR TYPE	DOOR MATERIAL	DOOR FINISH	FRAME TYPE	FRAME MATERIAL	FRAME FINISH	DETAILS HEAD	DETAILS JAMB	DETAILS SILL	UL LABEL	HARDWARE SET	REMARKS

LEGEND

- EXISTING CONSTRUCTION TO REMAIN
- NEW CONSTRUCTION
- NOT IN CONTRACT

GENERAL NOTES (DOOR SCHEDULE)

1. DOOR SIZES ARE NOMINAL. COORDINATE EXACT DIMENSIONS WITH HARDWARE SPECIFICATIONS.
2. PROVIDE DOOR, HARDWARE, AND FRAME (SHOP DRAWINGS, PRODUCT LITERATURE, SAMPLES) FOR GOVERNMENT'S REVIEW AND APPROVAL PRIOR TO FABRICATION AND INSTALLATION.
3. HARDWARE TYPES AND FUNCTIONS INDICATED IN THE HARDWARE SCHEDULE ARE THE BASIC INFORMATION NECESSARY FOR EACH DOOR OPENING. CONTRACTOR MUST PROVIDE ALL HARDWARE NECESSARY FOR A COMPLETE INSTALLATION, INCLUDING STRIKE PLATES AND BOXES.
4. HARDWARE MUST MEET THE REQUIREMENTS OF ANSI ICC/A117.1-2003 MAX FORCE NOT TO EXCEED 5 LBS/FOOT, TYPICAL AND MUST BE LEVER TYPE TO BE ICC/A117.1-2003 COMPLIANT.
5. CONTRACTOR MUST COORDINATE CYLINDERS, LOCK SETS, AND KEYING WITH GOVERNMENT PRIOR TO MOVE-IN. CONTRACTOR IS RESPONSIBLE TO PROVIDE LOCKSMITH SERVICES TO RE-KEY PRIOR TO MOVE IN. ALL NEW KEYING SYSTEMS MUST BE COMPATIBLE AND REMAIN ON THE BUILDING GRAND MASTER SYSTEM.
6. MOUNT HANDLES, PULLS, LATCHES, LOCKS AND OTHER OPERATING DEVICES TO MATCH EXISTING AFF. U.N.O. (3'-0" VIF) VERIFY MOUNTING HEIGHTS MEET THE REQUIREMENTS OF ANSI ICC/A117.1-2003. NOTIFY GOV'T OF ANY DISCREPANCIES PRIOR TO FABRICATION.
7. REFERENCE WORK PLANS FOR DOOR TYPE LOCATIONS.
8. DIMENSIONS, MATERIALS AND INSTALLATION MUST BE PER MANUFACTURERS SPECIFICATION AND RECOMMENDATION.
9. DOOR DIMENSIONAL TOLERANCES MUST ADHERE TO THE MOST RECENT PUBLICATION OF WDMA (WINDOW AND DOOR MANUFACTURER'S ASSOCIATION), OR NFPA FOR FIRE-RATING LABELED DOORS.
10. DOORS NOT NOTED ON PLAN ARE EXISTING TO REMAIN. SEE ADDITIONAL NOTES AND SCHEDULE REGARDING
11. THE LISTING OF HARDWARE ITEMS IS FOR THE CONVENIENCE OF THE GOVERNMENT AND CONTRACTOR. REFER TO PROJECT MANUAL FOR COMPLETE HARDWARE REQUIREMENTS. CONTRACTOR MUST CHECK FOR ANY DISCREPANCY WITH THE PROJECT MANUAL HARDWARE SPECIFICATION AND BRING ANY CONFLICT TO THE ATTENTION OF THE GOVERNMENT. IN CASE OF CONFLICT, THE MORE EXTENSIVE SCOPE WILL GOVERN.
12. SPECIFIED DOOR HARDWARE IS IN COMPLIANCE TO ALLOW FOR FREE PASSAGE OF OCCUPANTS FROM SIDE OF EGRESS.
13. COORDINATE WITH GOVERNMENT ON HARDWARE, DOOR, AND FRAME REQUIREMENTS PRIOR TO PURCHASE.
14. HARDWARE MANUFACTURER CAN BE EQUAL PER GOVERNMENT'S APPROVAL.
15. CONTRACTOR TO COORDINATE WITH GOVERNMENT REGARDING SECURITY RELATED INQUIRIES AND ITEMS AT PROJECT START.

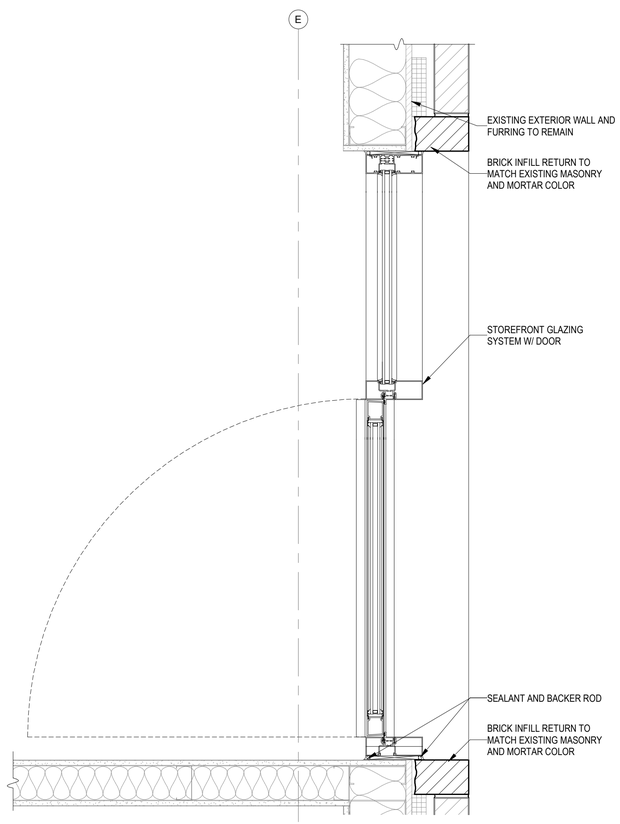

1 A-503 A-601 ENLARGED PLAN - STOREFRONT DOOR PLAN
SCALE: 1 1/2" = 1'-0"

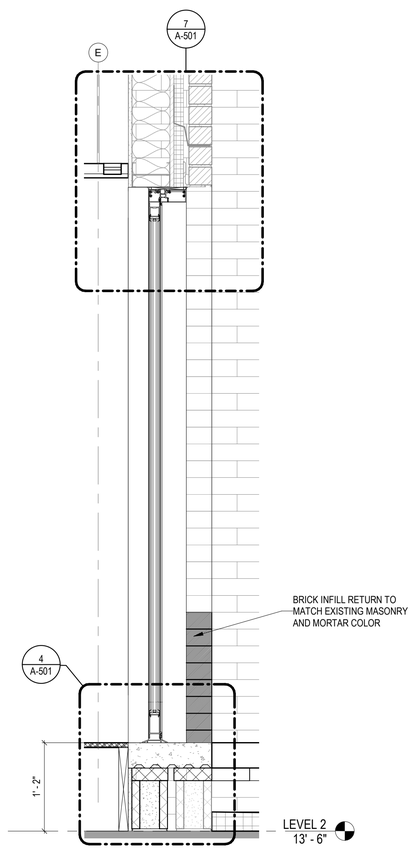

2 A-301 A-601 SECTION AT STOREFRONT DOOR
SCALE: 1" = 1'-0"

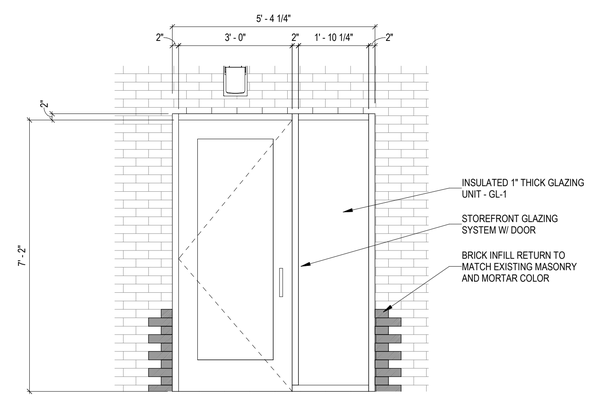

3 A-601 EXTERIOR DOOR ELEVATION
SCALE: 1/2" = 1'-0"

0 1' 2' 4' 6'
1/2" = 1'-0"

0 1' 2' 3'
1" = 1'-0"

SYM.	DESCRIPTION	DATE	APPR.
	Final Design Submission	06/28/2023	

NAVFAC

PROFESSIONAL CERTIFICATION. I CERTIFY THAT THESE DOCUMENTS WERE PREPARED OR APPROVED BY ME AND THAT I AM A DULY LICENSED ARCHITECT UNDER THE LAWS OF THE STATE OF MARYLAND, LICENSE NUMBER 9635, EXPIRATION DATE 8/15/23.

6/28/23
SEAL

MTFA architecture
3200 LANGSTON BOULEVARD, ARLINGTON, VA 22207
(703) 524 - 6616 www.mtfa.net
A/E INFO

APPROVED
FOR COMMANDER NAVFAC
ACTIVITY
FINAL DESIGN SUBMISSION
SATISFACTORY TO DATE
DES MJB DRW CBM CHK BB
PMDM
BRANCH MANAGER
CHIEF ENG/ARCH
FIRE PROTECTION

DEPARTMENT OF THE NAVY
NAVAL FACILITIES ENGINEERING SYSTEMS COMMAND
PUBLIC WORKS DEPARTMENT BETHESDA
NAVAL FACILITIES ENGINEERING SYSTEMS COMMAND ~ WASHINGTON
NAVAL SUPPORT ACTIVITY BETHESDA, MARYLAND
UNIFORMED SERVICES UNIVERSITY OF THE HEALTH SCIENCES
BETHESDA, MD
Building 76E Roof Garden
DOOR SCHEDULE

SCALE: AS NOTED
EPROJECT NO.: 1698751
CONSTR. CONTR. NO.
NAVFAC DRAWING NO.
13148381
SHEET 24 OF 49
A-601

DRAWFORM REVISION: 25 AUGUST 2020

A-601 Final Design Submission 06/28/2023
6/28/2023 2:19:17 PM

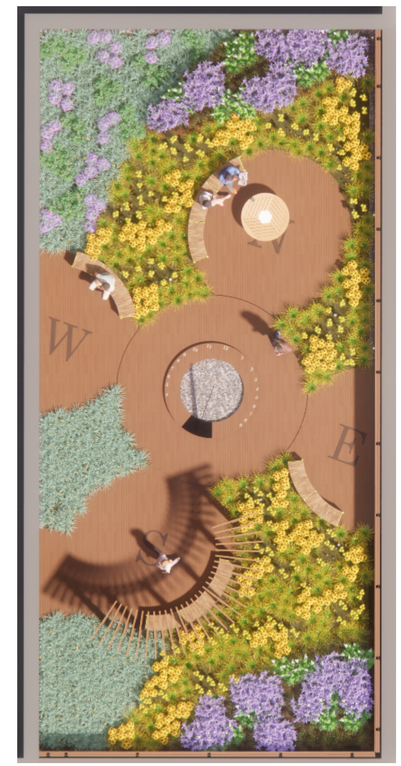

SYM.	DESCRIPTION	DATE	APPR
	Final Design Submission	06/28/2023	

NAVFAC

PROFESSIONAL CERTIFICATION. I CERTIFY THAT THESE DOCUMENTS WERE PREPARED OR APPROVED BY ME AND THAT I AM A DULY LICENSED ARCHITECT UNDER THE LAWS OF THE STATE OF MARYLAND, LICENSE NUMBER 9635, EXPIRATION DATE 8/15/23.

6/28/23

SEAL

MTFA architecture

3200 LANGSTON BOULEVARD, ARLINGTON, VA 22207
(703) 524 - 6616 www.mtfa.net

A/E INFO

APPROVED

FOR COMMANDER NAVFAC

ACTIVITY

FINAL DESIGN SUBMISSION

SATISFACTORY TO DATE

DES Designer | DRW Author | CHK Checker

PM/DM

BRANCH MANAGER

CHIEF ENG/ARCH

FIRE PROTECTION

DEPARTMENT OF THE NAVY
NAVAL FACILITIES ENGINEERING SYSTEMS COMMAND
PUBLIC WORKS DEPARTMENT, BETHESDA
NAVAL FACILITIES ENGINEERING SYSTEMS COMMAND ~ WASHINGTON
NAVAL SUPPORT ACTIVITY BETHESDA, MARYLAND
UNIFORMED SERVICES UNIVERSITY OF THE HEALTH SCIENCES
BETHESDA, MD

Building 76E Roof Garden

RENDERED VIEWS

SCALE: AS NOTED

EPROJECT NO.: 1698751

CONSTR. CONTR. NO.

NAVFAC DRAWING NO.
13148382

SHEET 25 OF 49

A-701

DRAWFORM REVISION: 25 AUGUST 2020

A-701 Final Design Submission 06/28/2023
6/28/2023 2:19:17 PM

ABBREVIATIONS

A	AMPERES.
AC	ABOVE CEILING
AFF	ABOVE FINISHED FLOOR
AHJ	AUTHORITY HAVING JURISDICTION
ATC	ACOUSTIC TILE CEILING
AWG	AMERICAN WIRE GAUGE
CA	CLEAN AGENT
CL	CEILING LEVEL
CONT.	CONTINUED
D	DRAIN
DN	DOWN
ELEV.	ELEVATOR
EMT	ELECTRICAL METALLIC TUBING
ETR	EXISTING TO REMAIN
(E)	EXISTING
F	FIRE LINE
FDC	FIRE DEPARTMENT CONNECTION
FH	FIRE HYDRANT
FHV	2-1/2" FIRE HOSE VALVE
N.I.C.	NOT IN CONTRACT
PA	PRE-ACTION
(R)	RELOCATE
SP	SPRINKLER PIPING
TYP.	TYPICAL
ZCA	SPRINKLER ZONE CONTROL ASSEMBLY

SYMBOLS

LIGHT HAZARD
DISCHARGE DENSITY 0.1 GPM/SF
REMOTE AREA 1500 SF
SPRINKLER K-FACTOR 5.6 GPM / $(PSI)^{1/2}$

ORDINARY HAZARD
DISCHARGE DENSITY 0.2 GPM/SF
REMOTE AREA 2500 SF
SPRINKLER K-FACTOR 8.0 GPM / $(PSI)^{1/2}$

MODIFICATION OF THE SPRINKLER SYSTEM IN THIS AREA IS NOT IN CONTRACT (N.I.C.)

AREA OF WORK

WF WATERFLOW SWITCH

TS TAMPER SWITCH

ZCA ZONE CONTROL ASSEMBLY

FIRE HYDRANT

F FIRE SUPPRESSION PIPE
GATE VALVE
GLOBE VALVE
SWING CHECK VALVE

OS&Y VALVE

BALL VALVE

BUTTERFLY VALVE

BACKFLOW PREVENTER
PIPE TURN UP
PIPE TURN DOWN
CONCENTRIC PIPE REDUCER
ECCENTRIC PIPE REDUCER
PIPE CAP
SPRINKLER RISER
EXISTING SPRINKLER
UPRIGHT SPRINKLER
PENDENT SPRINKLER
SIDEWALL SPRINKLER

GENERAL SYMBOLS

FLOOR PLAN AND DETAIL TITLES:

UNIQUE PLAN OR DETAIL NUMBER ON THIS DRAWING
NAME OF PLAN OR DETAIL
NORTH ARROW
2 FLOOR PLAN
FA101,FA102 1/8"=1'-0" 0 8'
ALL DRAWINGS WHERE THIS DETAIL IS REFERENCED FROM
GRAPHIC SCALE OF THIS PLAN OR DETAIL

2-PART REFERENCE DETAIL IDENTIFICATION:

2 FA101
NUMBER INDICATES DETAIL/SECTION
SHEET NUMBER WHERE DETAIL/SECTION IS DRAWN

SECTION IDENTIFICATION

2 FA101
NUMBER INDICATES SECTION
INDICATES DIRECTION OF CUTTING PLANE
SHEET NUMBER WHERE SECTION IS DRAWN

NORTH ARROW

N
ARROW INDICATES TRUE NORTH AND/OR PROJECT NORTH.

COLUMN LINE NUMBER

1 REVISION CLOUD WITH REVISION NUMBER DESIGNATION

BREAKLINE

MATCHLINE A-A MATCHLINE DESIGNATION

(E) EXISTING

POINT OF CONNECTION TO EXISTING

POINT OF TERMINATION OF REMOVAL

NOTE NUMBER

1234 ROOM NUMBER

FIRE SUPPRESSION REQUIREMENTS

1. MODIFY THE EXISTING WET-PIPE SPRINKLER SYSTEM. MODIFICATIONS TO EXISTING SYSTEM SHALL BE DESIGNED AND INSTALLED PER UFC 3-600-01 WITH CHANGE 6 2021 EDITION AND NFPA 13 2022 EDITION CRITERIA.
2. UNLESS OTHERWISE NOTED BY HATCHING, PROVIDE SPRINKLER SYSTEM DESIGN IN ACCORDANCE WITH LIGHT HAZARD CRITERIA.
3. PROVIDE QUICK RESPONSE CONCEALED WHITE SPRINKLERS IN AREAS WITH FINISHED CEILINGS. PROVIDE A MINIMUM SPRINKLER TEMPERATURE OF 155 FAHRENHEIT FOR ORDINARY TEMPERATURE SPRINKLERS.
4. PROVIDE SPRINKLERS IN CENTER OF ACOUSTIC CEILING TILES.
5. PROVIDE BLACK STEEL SPRINKLER PIPE. PIPE 2-INCH AND BELOW MUST BE SCHEDULE 40, PIPE 2.5-INCHES AND GREATER MUST BE MINIMUM SCHEDULE 10.
6. DO NOT PROVIDE SPRINKLER VALVES ABOVE HARD CEILINGS. DO NOT PROVIDE SPRINKLERS BELOW RAISED FLOOR. PROVIDE IDENTIFICATION SIGNAGE FOR ALL VALVES LOCATED ABOVE SUSPENDED CEILINGS.
7. ALL REQUIRED OUTAGES OF THE SPRINKLER SYSTEM SHALL BE COORDINATED THROUGH THE CONTRACTING OFFICER NOT LESS THAN 15 WORKING DAYS IN ADVANCE. THE GOVERNMENT WILL PROVIDE THE REQUESTED OUTAGE AND ASSOCIATED RESTORATION OF THE SPRINKLER SYSTEM. THE GOVERNMENT WILL IDENTIFY TO THE CONTRACTOR WHAT PIPING/EQUIPMENT HAVE BEEN TAKEN OUT OF SERVICE ONCE THE OUTAGE HAS BEEN MADE. THE GOVERNMENT WILL NOT DRAIN OR REFILL SPRINKLER PIPING AS PART OF AN OUTAGE. THIS WORK SHALL BE PERFORMED BY THE CONTRACTOR. OUTAGES DO NOT INCLUDE CONNECTION OF NEW WORK TO EXISTING SPRINKLER PIPING.
8. AN EXCLUSIVE GOVERNMENT CONTRACTOR/VENDOR RESPONSIBLE FOR MAINTAINING GOVERNMENT FIRE PROTECTION SYSTEMS SHALL BE OBTAINED FOR TIE IN OF NEW WORK AND/OR REPROGRAMMING OF OPERATING, EXISTING FIRE ALARM AND SPRINKLER SYSTEMS, AT CONTRACTORS COST.
9. A FIRE WATCH, AT CONTRACTOR'S COST, WILL BE CONDUCTED CONTINUOUSLY THROUGHOUT THE DURATION OF THE OUTAGE IN ALL AREAS AFFECTED BY THE OUTAGE. FINDINGS/COMMENTS WILL BE DOCUMENTED HOURLY ON FIRE WATCH FORMS PROVIDED BY THE WRNMMC FIRE PREVENTION DIVISION. DOCUMENTATION OF FINDINGS WILL BE MADE AVAILABLE TO THE WRNMMC FIRE DEPARTMENT OFFICIALS UPON THEIR REQUEST. IN THE EVENT OF ANY FIRE/SMOKE EMERGENCIES DISCOVERED DURING THE FIRE WATCH, EMERGENCY NOTIFICATION SHALL BE CONDUCTED IN ACCORDANCE WITH PROCEDURES OUTLINED IN NNMCINST 11320.1F.
10. OUTAGES WILL NOT BE PERMITTED TO TAKE PLACE FOR THE ENTIRE DURATION OF THE PROJECT. ONLY APPROVED OUTAGES COMPLYING WITH NOTES ON THIS SHEET ARE ALLOWED.
11. OVERNIGHT OUTAGES WILL NOT BE PERMITTED UNLESS WORK IS BEING DONE DURING THAT TIME PERIOD AND THE SPRINKLER SYSTEM IS PUT BACK INTO SERVICE WITHIN AN HOUR FROM COMPLETION OF WORK. OUTAGES SHALL BE LIMITED TO 8 HOURS INCLUDING TIME FOR DRAINING AND REFILLING.
12. THE SPRINKLER SYSTEM IS NOT PERMITTED TO HAVE AN OUTAGE FOR MORE THAN AN HOUR BEFORE STARTING WORK. THE SPRINKLER SYSTEM SHALL BE RESTORED WITHIN AN HOUR OF COMPLETION OF WORK. THE CONTRACTOR CANNOT LEAVE THE CONSTRUCTION SITE UNPROTECTED. THE SPRINKLER SYSTEM SHALL BE FILLED WITHIN AN HOUR OF COMPLETION OF WORK.

SYM	DESCRIPTION	DATE	APPR
	FINAL DESIGN SUBMISSION	06/28/2023	

NAVFAC

PROFESSIONAL CERTIFICATION. I CERTIFY THAT THESE DOCUMENTS WERE PREPARED OR APPROVED BY ME AND THAT I AM A DULY LICENSED ENGINEER UNDER THE LAWS OF THE STATE OF MARYLAND, LICENSE NUMBER 41681, EXPIRATION DATE 2/28/2024.

STATE OF MARYLAND ADAM PATERSON No. 41681 PROFESSIONAL ENGINEER
06/28/2023
SEAL

MTFA architecture
3200 LEE HIGHWAY, ARLINGTON, VA 22207
(703) 524 - 6616 www.mtfa.net

SUMMER CONSULTANTS INCORPORATED
7900 Westpark Dr. | Suite A405 | McLean, VA 22102
(703) 556-8820 | www.summerconsultants.com
A/E INFO

APPROVED
FOR COMMANDER NAVFAC
ACTIVITY
FINAL DESIGN SUBMISSION
SATISFACTORY TO DATE
DES EA DRW JL CHK AP
PM/DM
BRANCH MANAGER
CHIEF ENG/ARCH
FIRE PROTECTION

DEPARTMENT OF THE NAVY
NAVAL FACILITIES ENGINEERING SYSTEMS COMMAND
PUBLIC WORKS DEPARTMENT, BETHESDA
NAVAL FACILITIES ENGINEERING SYSTEMS COMMAND ~ WASHINGTON
NAVAL SUPPORT ACTIVITY BETHESDA, MARYLAND
BETHESDA, MD
UNIFORMED SERVICES UNIVERSITY OF THE HEALTH SCIENCES
Building 76E Roof Garden
SYMBOLS AND ABBREVIATIONS

SCALE: AS NOTED
EPROJECT NO.: 1698751
CONSTR. CONTR. NO.
NAVFAC DRAWING NO. 13148383
SHEET 26 OF 49
FX001
DRAWFORM REVISION: 25 AUGUST 2020

FILE NAME: 171.43 FX001.DWG
OUR REF: 171.43
PLOT DATE: 6/20/2023 11:10:29 AM

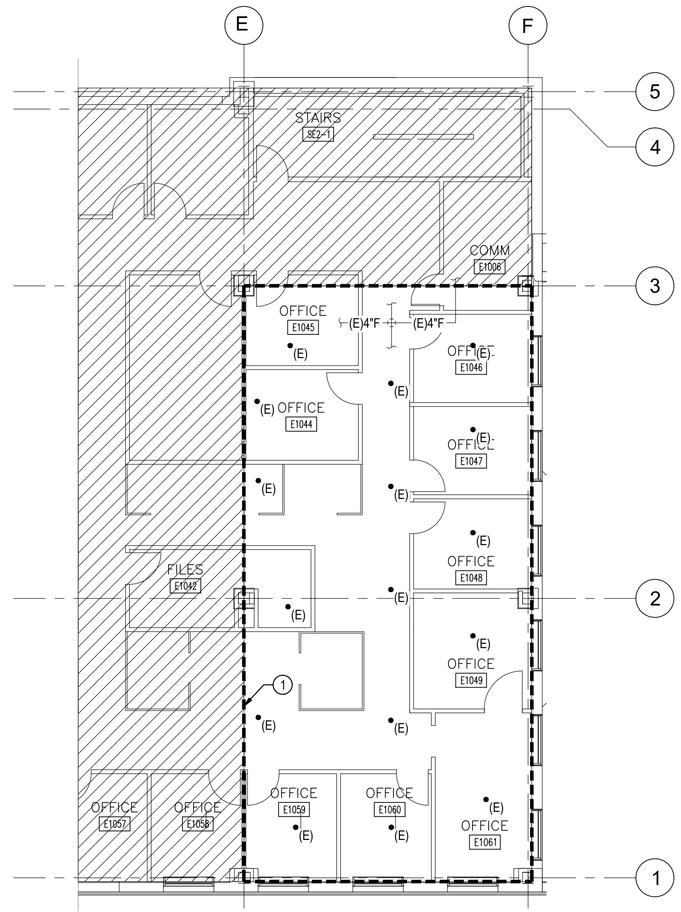

1 FIRST FLOOR DEMOLITION

1/8"=1'-0"

0 8' 16'

N

GENERAL NOTES

G1. VERIFY LOCATION AND DIMENSIONS OF EXISTING EQUIPMENT AND COORDINATE ALL WORK PRIOR TO THE START OF CONSTRUCTION.

G3. COORDINATE WORK WITH PHASING PLAN G-003. WORK ON FIRST FLOOR NORTH OF COLUMN LINE 2 SHALL OCCUR DURING PHASE 1. WORK ON FIRST FLOOR SOUTH OF COLUMN LINE 2 SHALL OCCUR DURING PHASE 2. WORK ON ROOF AND ON SECOND FLOOR SHALL OCCUR DURING PHASE 3.

NOTES

1. UNLESS NOTED OTHERWISE, FIRE PROTECTION PIPES, FITTINGS, SUPPORTS, AND SPRINKLER HEADS ARE EXISTING TO REMAIN. SUPPORT AND PROTECT SPRINKLER HEADS DURING DEMOLITION AND CONSTRUCTION.

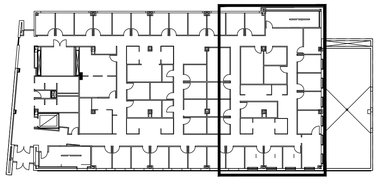

K KEY PLAN

NOT TO SCALE

N

SYM	DESCRIPTION	DATE	APPR
	FINAL DESIGN SUBMISSION	06/28/2023	

PROFESSIONAL CERTIFICATION. I CERTIFY THAT THESE DOCUMENTS WERE PREPARED OR APPROVED BY ME AND THAT I AM A DULY LICENSED ENGINEER UNDER THE LAWS OF THE STATE OF MARYLAND, LICENSE NUMBER 41681, EXPIRATION DATE 2/28/2024.

06/28/2023

SEAL

MTFA architecture

3200 LEE HIGHWAY, ARLINGTON, VA 22207
(703) 524 - 6616 www.mtfa.net

SUMMER CONSULTANTS INCORPORATED

7900 Westpark Dr. | Suite A405 | McLean, VA 22102
(703) 556-8820 | www.summerconsultants.com
A/E INFO

APPROVED

FOR COMMANDER NAVFAC

ACTIVITY

FINAL DESIGN SUBMISSION

SATISFACTORY TO DATE

DES EA DRW EA CHK AP

PM/DM

BRANCH MANAGER

CHIEF ENG/ARCH

FIRE PROTECTION

DEPARTMENT OF THE NAVY
NAVAL FACILITIES ENGINEERING SYSTEMS COMMAND
PUBLIC WORKS DEPARTMENT BETHESDA

NAVAL FACILITIES ENGINEERING SYSTEMS COMMAND ~ WASHINGTON
NAVAL SUPPORT ACTIVITY BETHESDA, MARYLAND

UNIFORMED SERVICES UNIVERSITY OF THE HEALTH SCIENCES

BETHESDA, MD

Building 76E Roof Garden

FIRST FLOOR - DEMOLITION

SCALE: AS NOTED

EPROJECT NO.: 1698751

CONSTR. CONTR. NO.

NAVFAC DRAWING NO.
13148384

SHEET 27 OF 49

FD101

DRAWFORM REVISION: 25 AUGUST 2020

FILE NAME: 171.43 FD101.DWG
OUR REF: 171.43
PLOT DATE: 6/20/2023 11:10:36 AM

GENERAL NOTES

G1. VERIFY LOCATION AND DIMENSIONS OF EXISTING EQUIPMENT AND COORDINATE ALL WORK PRIOR TO THE START OF CONSTRUCTION.

G3. COORDINATE WORK WITH PHASING PLAN G-003. WORK ON FIRST FLOOR NORTH OF COLUMN LINE 2 SHALL OCCUR DURING PHASE 1. WORK ON FIRST FLOOR SOUTH OF COLUMN LINE 2 SHALL OCCUR DURING PHASE 2. WORK ON ROOF AND ON SECOND FLOOR SHALL OCCUR DURING PHASE 3.

NOTES

1. DISCONNECT AND REMOVE SPRINKLER HEADS BACK TO EXISTING BRANCH LINES.

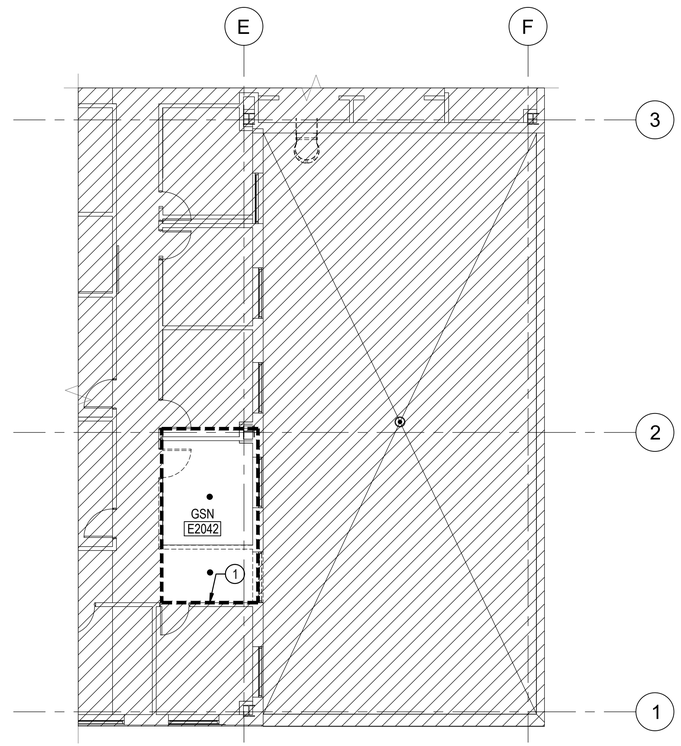

1 SECOND FLOOR DEMOLITION

1/8"=1'-0"

0 8' 16'

N

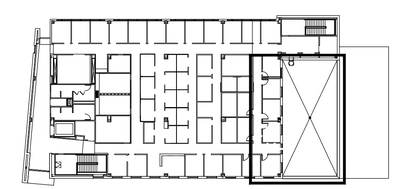

K KEY PLAN

NOT TO SCALE

N

SYM	DESCRIPTION	DATE	APPR
	FINAL DESIGN SUBMISSION	06/28/2023	

NAVFAC

PROFESSIONAL CERTIFICATION. I CERTIFY THAT THESE DOCUMENTS WERE PREPARED OR APPROVED BY ME AND THAT I AM A DULY LICENSED ENGINEER UNDER THE LAWS OF THE STATE OF MARYLAND, LICENSE NUMBER 41681, EXPIRATION DATE 2/28/2024.

STATE OF MARYLAND ELIJAH PATERSON No. 41681 PROFESSIONAL ENGINEER

06/28/2023

SEAL

MTFA architecture

3200 LEE HIGHWAY, ARLINGTON, VA 22207
(703) 524 - 6616 www.mtfa.net

SUMMER CONSULTANTS INCORPORATED

7900 Westpark Dr. | Suite A405 | McLean, VA 22102
(703) 556-8820 | www.summerconsultants.com
A/E INFO

APPROVED

FOR COMMANDER NAVFAC

ACTIVITY

FINAL DESIGN SUBMISSION

SATISFACTORY TO DATE

DES	EA	DRW	JL	CHK	AP

PM/DM

BRANCH MANAGER

CHIEF ENG/ARCH

FIRE PROTECTION

DEPARTMENT OF THE NAVY
NAVAL FACILITIES ENGINEERING SYSTEMS COMMAND
PUBLIC WORKS DEPARTMENT, BETHESDA

NAVAL FACILITIES ENGINEERING SYSTEMS COMMAND – WASHINGTON
NAVAL SUPPORT ACTIVITY BETHESDA, MARYLAND

UNIFORMED SERVICES UNIVERSITY OF THE HEALTH SCIENCES
BETHESDA, MD

Building 76E Roof Garden

SECOND FLOOR

SCALE: AS NOTED

EPROJECT NO.: 1698751

CONSTR. CONTR. NO.

NAVFAC DRAWING NO.
13148385

SHEET 28 OF 49

FD102

DRAWFORM REVISION: 25 AUGUST 2020

FILE NAME: 171.43 FD102.DWG
OUR REF: 171.43
PLOT DATE: 6/20/2023 11:10:43 AM

GENERAL NOTES

G1. VERIFY LOCATION AND DIMENSIONS OF EXISTING EQUIPMENT AND COORDINATE ALL WORK PRIOR TO THE START OF CONSTRUCTION.

G3. COORDINATE WORK WITH PHASING PLAN G-003. WORK ON FIRST FLOOR NORTH OF COLUMN LINE 2 SHALL OCCUR DURING PHASE 1. WORK ON FIRST FLOOR SOUTH OF COLUMN LINE 2 SHALL OCCUR DURING PHASE 2. WORK ON ROOF AND ON SECOND FLOOR SHALL OCCUR DURING PHASE 3.

NOTES

1. PROVIDE SPRINKLER PROTECTION THROUGHOUT SPACE IN ACCORDANCE WITH NFPA 13. PROVIDE WHITE K5.6 QUICK RESPONSE CONCEALED PENDANT SPRINKLER HEADS.

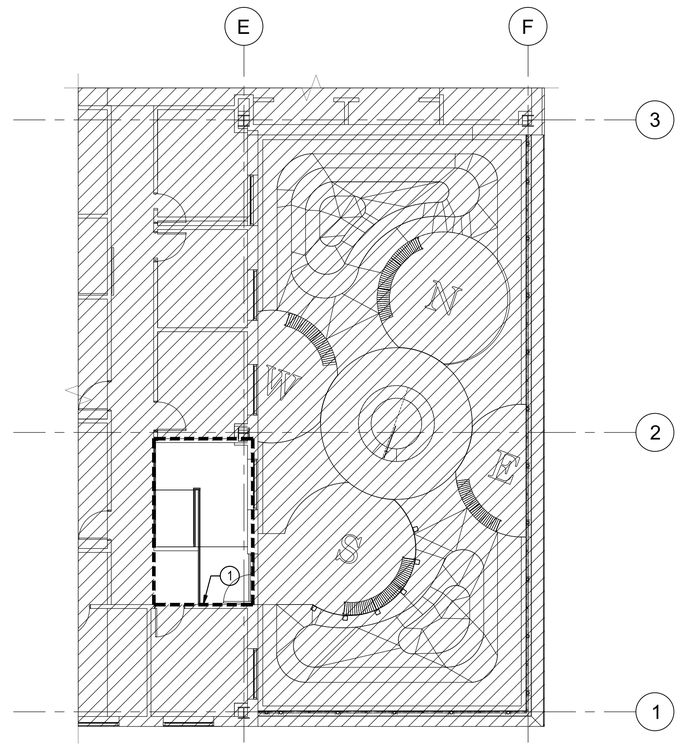

1 SECOND FLOOR
1/8"=1'-0"
0 8' 16'
N

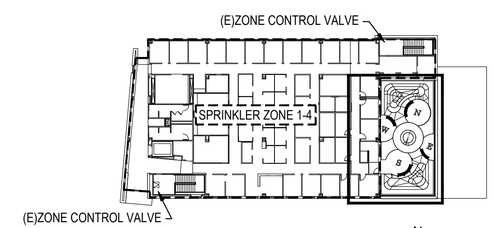

K KEY PLAN
NOT TO SCALE
N

SYM	DESCRIPTION	DATE	APPR
	FINAL DESIGN SUBMISSION	06/28/2023	

PROFESSIONAL CERTIFICATION. I CERTIFY THAT THESE DOCUMENTS WERE PREPARED OR APPROVED BY ME AND THAT I AM A DULY LICENSED ENGINEER UNDER THE LAWS OF THE STATE OF MARYLAND, LICENSE NUMBER 41681, EXPIRATION DATE 2/28/2024.

STATE OF MARYLAND ANJA PATERSON No. 41681 PROFESSIONAL ENGINEER
06/28/2023
SEAL

MTFA architecture
3200 LEE HIGHWAY, ARLINGTON, VA 22207
(703) 524 - 6616 www.mtfa.net

SUMMER CONSULTANTS INCORPORATED
7900 Westpark Dr. | Suite A405 | McLean, VA 22102
(703) 556-8820 | www.summerconsultants.com
A/E INFO

APPROVED

FOR COMMANDER NAVFAC

ACTIVITY
FINAL DESIGN SUBMISSION

SATISFACTORY TO DATE

DES	EA	DRW	JL	CHK	AP

PM/DM

BRANCH MANAGER

CHIEF ENG/ARCH

FIRE PROTECTION

DEPARTMENT OF THE NAVY
NAVAL FACILITIES ENGINEERING SYSTEMS COMMAND
PUBLIC WORKS DEPARTMENT, BETHESDA
NAVAL FACILITIES ENGINEERING SYSTEMS COMMAND ~ WASHINGTON
NAVAL SUPPORT ACTIVITY BETHESDA, MARYLAND
UNIFORMED SERVICES UNIVERSITY OF THE HEALTH SCIENCES
BETHESDA, MD

Building 76E Roof Garden

SECOND FLOOR

SCALE: AS NOTED
EPROJECT NO.: 1698751
CONSTR. CONTR. NO.
NAVFAC DRAWING NO. 13148386
SHEET 29 OF 49

FX101

DRAWFORM REVISION: 25 AUGUST 2020

FILE NAME: 171.43 FX101.DWG
OUR REF: 171.43
PLOT DATE: 6/20/2023 11:10:49 AM

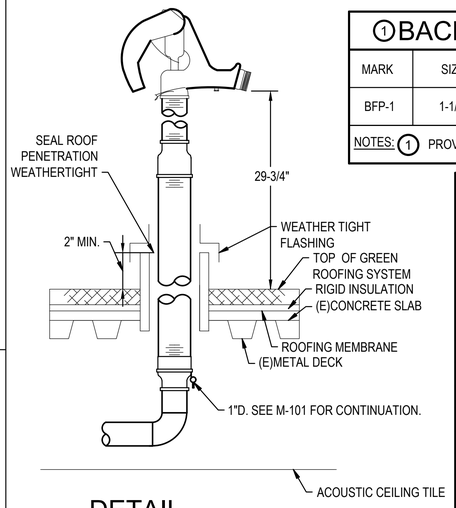

DETAIL 1 ROOF HYDRANT

M-101 NO SCALE

1 BACKFLOW PREVENTER SCHEDULE

MARK	SIZE	MAX. PRESSURE DROP PSI	@ GPM	TYPE	SERVICE
BFP-1	1-1/4"	13.0	15 GPM	REDUCED PRESSURE	ROOF GARDEN GROUND HYDRANT

NOTES: 1 PROVIDE ASSE STANDARD 1013 BACKFLOW PREVENTER.

VARIABLE AIR VOLUME BOX BALANCING SCHEDULE 1

UNIT NO.	BOX AIRFLOW BALANCE CFM		REHEAT COIL				NOTES
	MIN.	MAX.	AIR SIDE			WATER SIDE	
			AIRFLOW (CFM)	E.A.T. (°F)	L.A.T. (°F)	FLOW (GPM)	
(E)VAV1-8	95	310	145	55.8	86.0	0.5	
(E)VAV1-9	95	310	145	55.8	86.6	0.6	
(E)VAV1-10	90	295	200	55.8	86.9	1.8	
(E)VAV1-11	90	290	145	55.8	85.9	0.5	
(E)VAV1-21	60	200	60	55.8	105.0	0.5	
(E)VAV1-22	45	155	45	55.8	112.5	0.5	
(E)VAV1-23	85	280	85	55.8	96.6	0.5	
(E)VAV2-9	145	480	235	56.1	87.0	1.0	

NOTES: 1 BALANCE EXISTING BOXES TO INDICATED AIR AND WATER FLOWS.

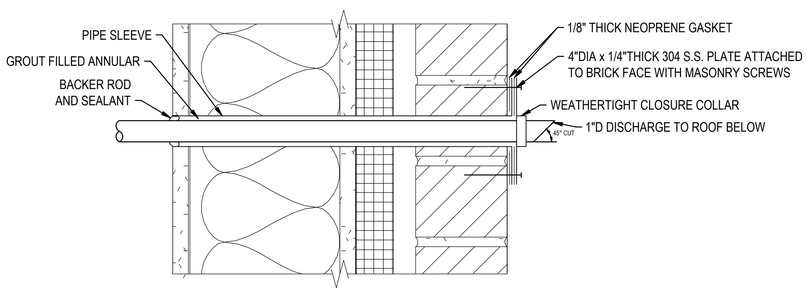

DETAIL 2 DRAIN PIPE PENETRATION

M-101 NO SCALE

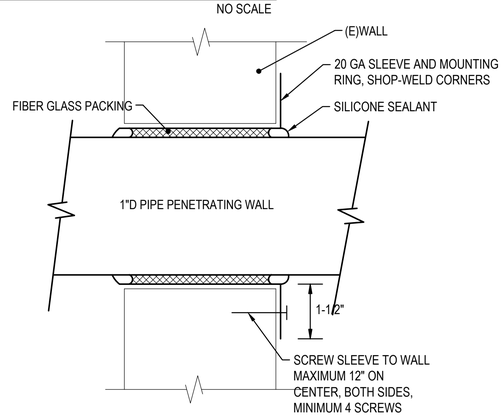

DETAIL 3 MER WALL PENETRATION

M-301 NO SCALE

ABBREVIATIONS

ARCH.	ARCHITECTURAL
A.P.	ACCESS PANEL
APPROX.	APPROXIMATELY
BHP	BRAKE HORSEPOWER
BTU	BRITISH THERMAL UNITS
BTUH	BRITISH THERMAL UNITS PER HOUR
C.D.	CEILING DIFFUSER
CFM	CUBIC FEET PER MINUTE
C.G.	CEILING GRILLE
C.O.	CLEANOUT
C.R.	CEILING REGISTER
CW	DOMESTIC COLD WATER
D.B.	DRY BULB
db	DECIBEL
DDC	DIRECT DIGITAL CONTROL
DESIG.	DESIGNATION
DIA	DIAMETER
DN.	DOWN
(E)	EXISTING
E.A.T.	ENTERING AIR TEMPERATURE
E.D.B.	ENTERING DRY BULB
EFF.	EFFICIENCY
E.G.	EXHAUST GRILLE
ELEV.	ELEVATION/ELEVATOR
ENT.	ENTERING
E.S.P.	EXTERNAL STATIC PRESSURE
E.W.B.	ENTERING WET BULB
E.W.T.	ENTERING WATER TEMPERATURE
EXIST.	EXISTING
°F	DEGREES FAHRENHEIT
F.D.	FIRE DAMPER
FLA	FULL LOAD AMPS
FL.D.	FLOOR DRAIN
FLR.	FLOOR
FPM	FEET PER MINUTE
FT.	FEET
F.V.	FACE VELOCITY
GAL.	GALLON
GPM	GALLONS PER MINUTE
H.C.	HEATING COIL
HP	HORSEPOWER
HW	DOMESTIC HOT WATER
HWR	HEATING WATER RETURN
HWS	HEATING WATER SUPPLY
Hz	HERTZ
IN.	INCHES
JC	JANITORS CLOSET
L.A.T.	LEAVING AIR TEMPERATURE
LBS.	POUNDS
LBS./HR	POUNDS PER HOUR
L.D.B.	LEAVING DRY BULB
L.W.T.	LEAVING WATER TEMPERATURE
MAX.	MAXIMUM
M.B.D.	MANUAL BALANCING DAMPER
MER	MECHANICAL EQUIPMENT ROOM
MIN.	MINIMUM
M.O.D.	MOTOR OPERATED DAMPER
NC	NOISE CRITERIA
N.C.	NORMALLY CLOSED
N.O.	NORMALLY OPEN
NPW	NON-POTABLE WATER
O.A.	OUTSIDE AIR
O.C.	ON CENTER
O.S.D.	OPEN SITE DRAIN
P.D.	PRESSURE DROP
PH	PHASE
PRV	PRESSURE RELIEF VALVE
PSI	POUNDS PER SQUARE INCH
PSIG	POUNDS PER SQUARE INCH GAUGE
PVC	POLYVINYL CHLORIDE
R.A.	RETURN AIR
R.G.	RETURN GRILLE
RLA	RUNNING LOAD AMPS
RPM	REVOLUTIONS PER MINUTE
S.A.	SUPPLY AIR
S.P.	STATIC PRESSURE
S.S.	STAINLESS STEEL
T.O.G.	TOP OF GRADE
T.O.S.	TOP OF STEEL
T.R.	TOP REGISTER
TYP.	TYPICAL
V	VOLTS
VAV	VARIABLE AIR VOLUME
VOL.	VOLUME
W.B.	WET BULB
W.C.	WATERCOLUMN
W.G.	WATER GAUGE

SYMBOLS CONT.

	RECTANGULAR DUCT SIZE TRANSITION
	RIGID ROUND DUCT SIZE TRANSITION
	DUCT TRANSITION FROM SQUARE TO ROUND
	DUCT ELBOW WITH TURNING VANES
	FLEXIBLE DUCTWORK. 5 FEET MAXIMUM LENGTH, SIZE AS INDICATED OR SCHEDULED
135	PLENUM SLOT DIFFUSER WITH FLEXIBLE DUCT(5' MAXIMUM LENGTH) SAME SIZE AS DIFFUSER NECK SIZE. DIFFUSER SIZE PER SCHEDULE UNLESS OTHERWISE NOTED. PROVIDE CONICAL SPIN-IN TAP WITH BALANCING DAMPER AT RECTANGULAR DUCT. NUMBER INDICATES BALANCING AIRFLOW CFM.
135	SQUARE CEILING DIFFUSER WITH FLEXIBLE DUCT(5' MAXIMUM LENGTH) SAME SIZE AS DIFFUSER NECK SIZE. DIFFUSER SIZE PER SCHEDULE UNLESS OTHERWISE NOTED. PROVIDE CONICAL SPIN-IN TAP WITH BALANCING DAMPER AT CIRCULAR DUCT. NUMBER INDICATES BALANCING AIRFLOW CFM.
135 CR	CEILING REGISTER, SIZE PER SCHEDULE UNLESS OTHERWISE NOTED. NUMBER INDICATES BALANCING AIRFLOW CFM.
	SUPPLY AIR DIFFUSER, 24x24 FACE AREA, SUITABLE FOR 2'x4' TILE CEILING.
	PERFORATED CEILING PANEL, 24x24 FACE AREA, SUITABLE FOR 2'x4' TILE CEILING.
350	RETURN AIR SYMBOL NUMBER INDICATES CFM
350	SUPPLY AIR SYMBOL NUMBER INDICATES CFM
T	THERMOSTAT
H	HUMIDITY SENSOR
CW	DOMESTIC COLD WATER
CWR	CHILLED WATER RETURN
CWS	CHILLED WATER SUPPLY
D	CONDENSATE DRAIN
F	FIRE LINE PIPING
HW	DOMESTIC HOT WATER
HWC	HOT WATER CIRCULATING
HWR	HEATING WATER RETURN
HWS	HEATING WATER SUPPLY
MU	MAKE-UP WATER
NPW	NON-POTABLE WATER
SP	SPRINKLER PIPING
ST	STORM PIPING
	PIPE TURN UP
	PIPE TURN DOWN
	CONCENTRIC PIPE REDUCER
	ECCENTRIC PIPE REDUCER
	DIRECTION OF FLOW
	PIPE CAP
C.O.	PIPE CLEANOUT
W.C.O.	WALL PIPE CLEANOUT
F.C.O.	FLOOR CLEANOUT
FL.D.	FLOOR DRAIN
	GATE VALVE
	GLOBE VALVE
	SWING CHECK VALVE
	TWO-WAY CONTROL VALVE
	THREE-WAY CONTROL VALVE
	STRAINER
	UNION
	BALANCING VALVE
	BALL VALVE
	BACKFLOW PREVENTER

GENERAL SYMBOLS

FLOOR PLAN AND DETAIL TITLES:

UNIQUE PLAN OR DETAIL NUMBER ON THIS DRAWING — NAME OF PLAN OR DETAIL — NORTH ARROW

2 FLOOR PLAN

M101, M102 1/8"=1'-0" 0 8'

ALL DRAWINGS WHERE DETAIL IS REFERENCED — GRAPHIC SCALE OF PLAN OR DETAIL

2-PART REFERENCE DETAIL IDENTIFICATION:

2 M101 — NUMBER INDICATES DETAIL/SECTION; SHEET NUMBER WHERE DETAIL/SECTION IS DRAWN

SECTION IDENTIFICATION

2 M101 — NUMBER INDICATES SECTION; INDICATES DIRECTION OF CUTTING PLANE; SHEET NUMBER WHERE SECTION IS DRAWN

NORTH ARROW

N — ARROW INDICATES TRUE NORTH AND/OR PROJECT NORTH

#	COLUMN BUBBLE DESIGNATION
1	REVISION CLOUD WITH REVISION NUMBER DESIGNATION
	BREAKLINE
MATCHLINE A-A	MATCHLINE DESIGNATION
	DEMOLITION LINETYPE
	CENTERLINE
℄	CENTERLINE SYMBOL
(E)	EXISTING
	POINT OF CONNECTION TO EXISTING
	POINT OF TERMINATION OF REMOVAL
#	NOTE NUMBER
1234	ROOM NUMBER DESIGNATION.

SYMBOLS

	EXHAUST OR RETURN DUCT UP
	EXHAUST OR RETURN DUCT DOWN
	SUPPLY DUCT UP
	SUPPLY DUCT DOWN
	ROUND DUCT UP
	ROUND DUCT DOWN
F.D.&A.D.	DUCT WITH FIRE DAMPER AND MINIMUM 16x16 ACCESS DOOR. PROVIDE LAMINATED PLASTIC LABEL WITH 1/2" LETTERING READING, "FIRE DAMPER", AND AFIX TO OUTSIDE OF DUCT ACCESS DOOR PER NFPA.
A.D.	DUCT WITH ACCESS DOOR, MINIMUM 16x16
M.B.D.	DUCT WITH MANUAL BALANCING DAMPER. PROVIDE ACCESS DOOR MINIMUM (DUCT WIDTH MINUS 2") WIDE BY 16" LONG.
M.O.D.	DUCT WITH MOTOR OPERATED DAMPER
	DUCT WITH FLEXIBLE CONNECTION

SYM	DESCRIPTION	DATE	APPR
	FINAL DESIGN SUBMISSION	06/28/2023	

NAVFAC

PROFESSIONAL CERTIFICATION. I CERTIFY THAT THESE DOCUMENTS WERE PREPARED OR APPROVED BY ME AND THAT I AM A DULY LICENSED ENGINEER UNDER THE LAWS OF THE STATE OF MARYLAND, LICENSE NUMBER 52805, EXPIRATION DATE 05/31/2024

06/28/2023

SEAL

MTFA architecture
3200 LEE HIGHWAY, ARLINGTON, VA 22207
(703) 524 - 6616 www.mtfa.net

SUMMER CONSULTANTS INCORPORATED
7900 Westpark Dr. | Suite A405 | McLean, VA 22102
(703) 556-8820 | www.summerconsultants.com
A/E INFO

APPROVED

FOR COMMANDER NAVFAC

ACTIVITY

FINAL DESIGN SUBMISSION

SATISFACTORY TO DATE

DES STB DRW STB CHK VT

PM/DM

BRANCH MANAGER

CHIEF ENG/ARCH

FIRE PROTECTION

DEPARTMENT OF THE NAVY
NAVAL FACILITIES ENGINEERING SYSTEMS COMMAND
PUBLIC WORKS DEPARTMENT, BETHESDA

NAVAL FACILITIES ENGINEERING SYSTEMS COMMAND – WASHINGTON
NAVAL SUPPORT ACTIVITY BETHESDA, MARYLAND

UNIFORMED SERVICES UNIVERSITY OF THE HEALTH SCIENCES — BETHESDA, MD

Building 76E Roof Garden

SYMBOLS AND ABBREVIATIONS

SCALE: AS NOTED

EPROJECT NO.: 1698751

CONSTR. CONTR. NO.

NAVFAC DRAWING NO. 13148387

SHEET 30 OF 49

M-001

DRAWFORM REVISION: 25 AUGUST 2020

FILE NAME: 171.43 M-001.DWG
OUR REF: 171.43
PLOT DATE: 6/20/2023 11:11:24 AM

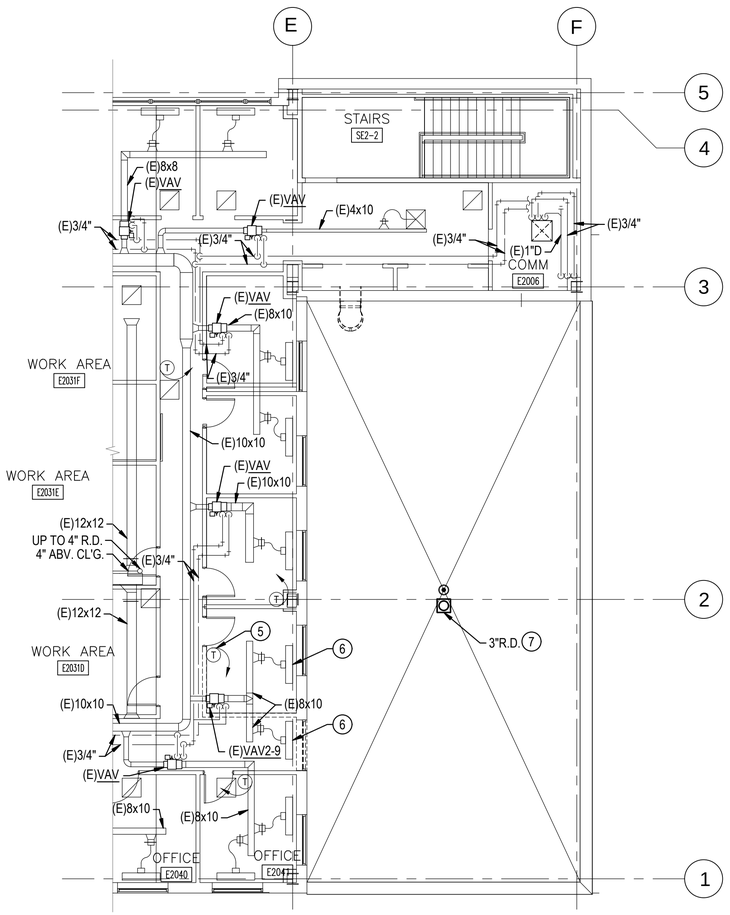

2 SECOND FLOOR DEMOLITION

1/8"=1'-0"

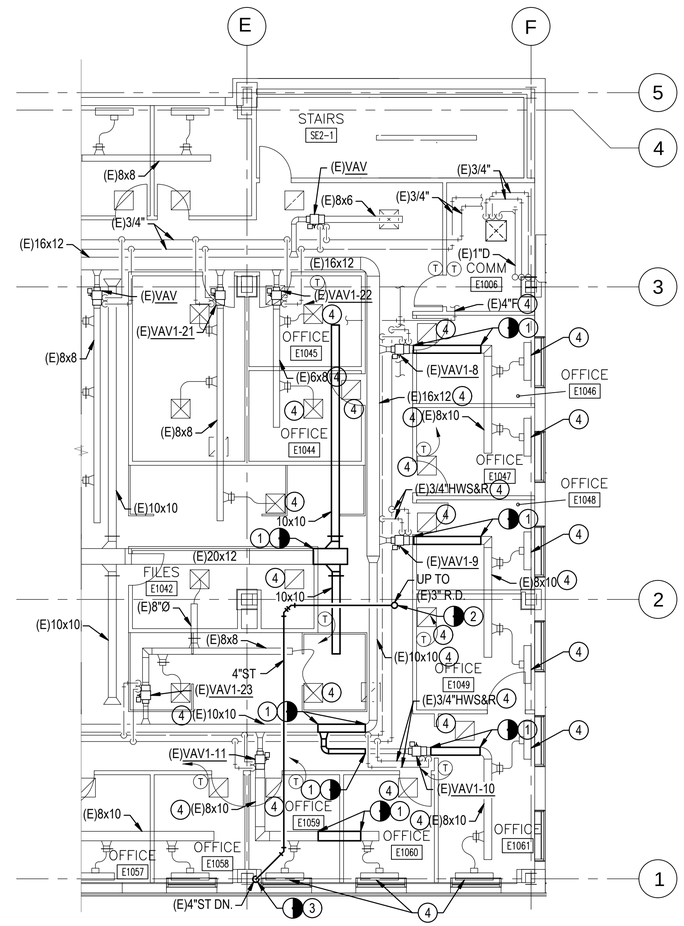

1 FIRST FLOOR DEMOLITION

1/8"=1'-0"

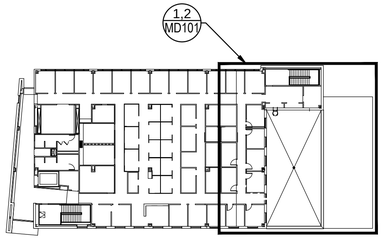

K KEY PLAN

NOT TO SCALE

GENERAL NOTES

G1. VERIFY LOCATION AND DIMENSIONS OF EXISTING EQUIPMENT AND COORDINATE ALL WORK PRIOR TO THE START OF CONSTRUCTION.

G3. COORDINATE WORK WITH PHASING PLAN G-003. WORK IN GROUND FLOOR DETAIL 2/M-101 AND WORK ON FIRST FLOOR NORTH OF COLUMN LINE 2 SHALL OCCUR DURING PHASE 1. WORK ON FIRST FLOOR SOUTH OF COLUMN LINE 2 SHALL OCCUR DURING PHASE 2. WORK ON ROOF AND ON SECOND FLOOR SHALL OCCUR DURING PHASE 3.

NOTES

1. CAREFULLY REMOVE DUCT, HANGERS, SUPPORTS AND APPURTENANCES COMPLETE TO POINTS INDICATED. PROVIDE TEMPORARY SUPPORTS FOR REMAINING DUCTWORK.
2. CAREFULLY REMOVE PIPE, HANGERS, SUPPORTS AND APPURTENANCES COMPLETE TO UNDERSIDE OF SLAB.
3. CAREFULLY REMOVE PIPE, HANGERS, SUPPORTS AND APPURTENANCES COMPLETE TO ENTRY INTO CHASE.
4. TEMPORARILY SUPPORT EXISTING DUCT, PIPING, AIR DEVICES, AND APPURTENANCES TO ALLOW FOR INSTALLATION OF STRUCTURAL REINFORCEMENT AND NEW CEILING WITHIN COLUMN LINES 1 AND 3 AND E AND F.
5. CAREFULLY DISCONNECT AND STORE THERMOSTAT FOR REUSE. SEE M-101 FOR REINSTALLATION LOCATION.
6. TEMPORARILY SUPPORT EXISTING AIR DEVICE TO ALLOW FOR INSTALLATION OF WALLS AND CEILING.
7. CAREFULLY REMOVE DRAIN.

SYM	DESCRIPTION	DATE	APPR
	FINAL DESIGN SUBMISSION	06/28/2023	

PROFESSIONAL CERTIFICATION. I CERTIFY THAT THESE DOCUMENTS WERE PREPARED OR APPROVED BY ME AND THAT I AM A DULY LICENSED ENGINEER UNDER THE LAWS OF THE STATE OF MARYLAND, LICENSE NUMBER 52805, EXPIRATION DATE 05/31/2024

06/28/2023

SEAL

MTFA architecture
3200 LEE HIGHWAY, ARLINGTON, VA 22207
(703) 524 - 6616 www.mtfa.net

SUMMER CONSULTANTS INCORPORATED
7900 Westpark Dr. | Suite A405 | McLean, VA 22102
(703) 556-8820 | www.summerconsultants.com
A/E INFO

APPROVED

FOR COMMANDER NAVFAC

ACTIVITY
FINAL DESIGN SUBMISSION

SATISFACTORY TO DATE

DES STB DRW STB CHK VT

PM/DM

BRANCH MANAGER

CHIEF ENG/ARCH

FIRE PROTECTION

DEPARTMENT OF THE NAVY
NAVAL FACILITIES ENGINEERING SYSTEMS COMMAND ~ WASHINGTON
PUBLIC WORKS DEPARTMENT, BETHESDA
NAVAL FACILITIES ENGINEERING SYSTEMS COMMAND
NAVAL SUPPORT ACTIVITY BETHESDA, MARYLAND
UNIFORMED SERVICES UNIVERSITY OF THE HEALTH SCIENCES
BETHESDA, MD
Building 76E Roof Garden
MECHANICAL DEMO

SCALE: AS NOTED
EPROJECT NO.: 1698751
CONSTR. CONTR. NO.
NAVFAC DRAWING NO. 13148388
SHEET 31 OF 49
MD101

DRAWFORM REVISION: 25 AUGUST 2020

FILE NAME: 171.43 MD101.DWG
OUR REF: 171.43
PLOT DATE: 6/28/2023 1:28:06 PM

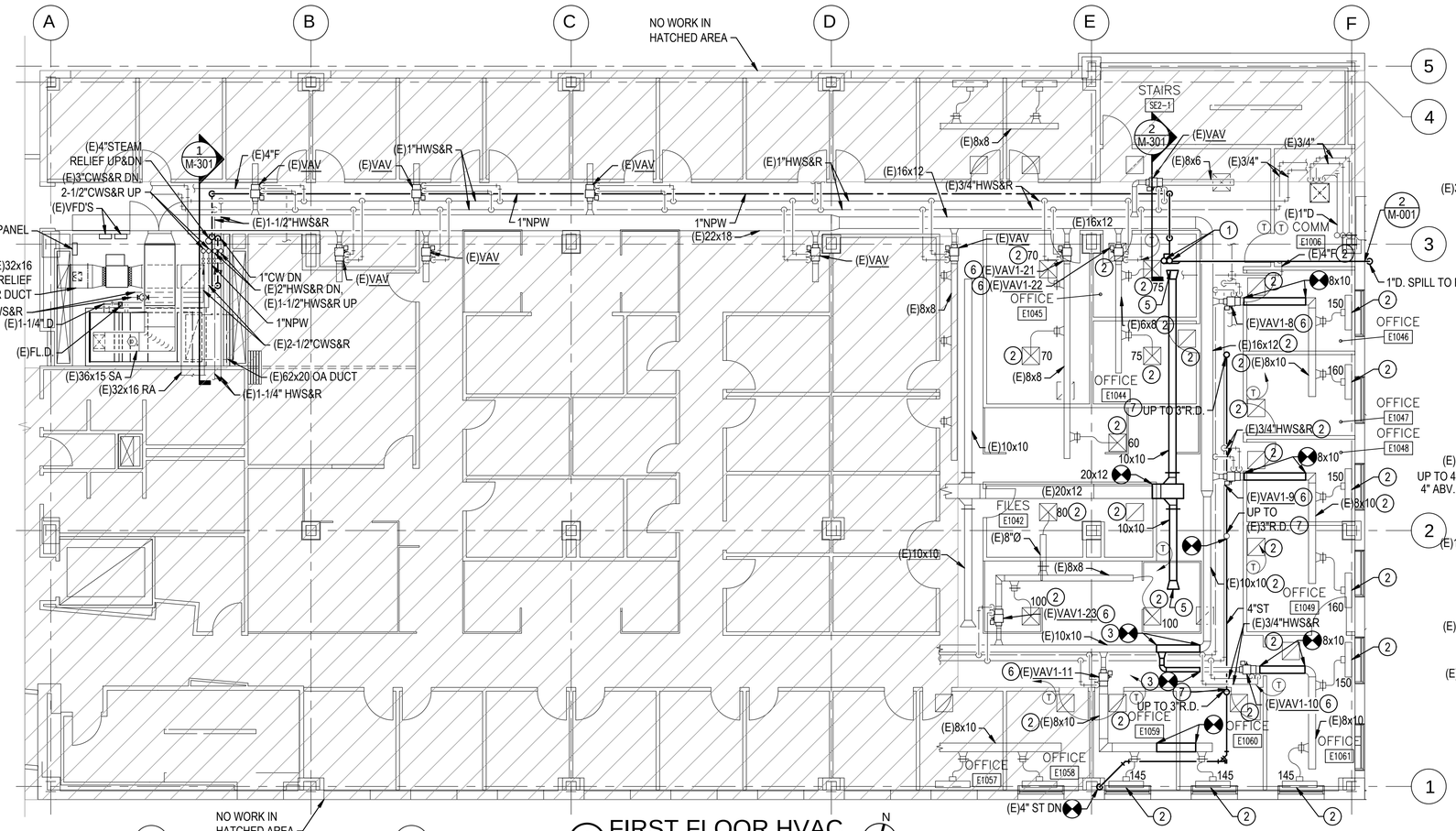

3 FIRST FLOOR HVAC
1/8"=1'-0"

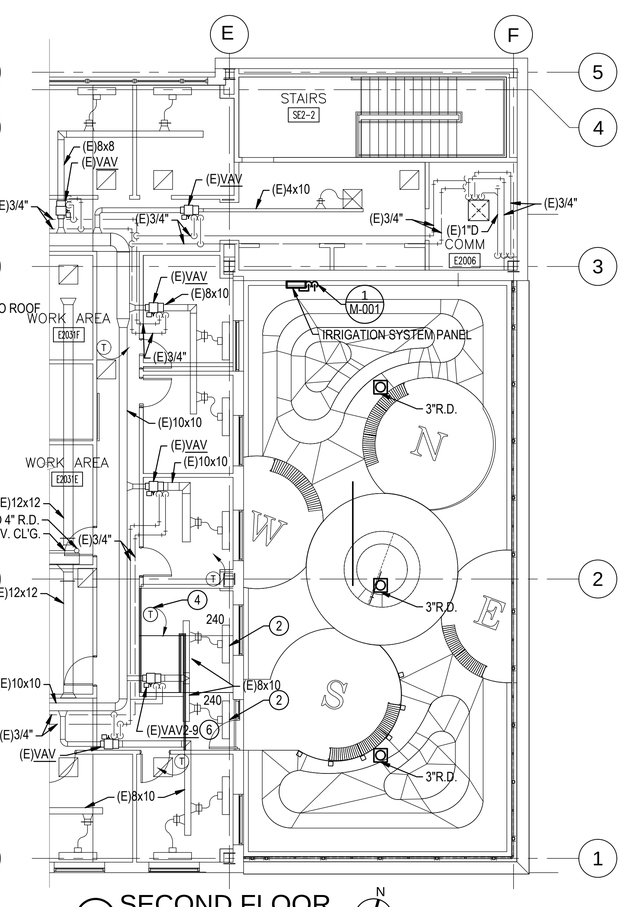

1 SECOND FLOOR
1/8"=1'-0"

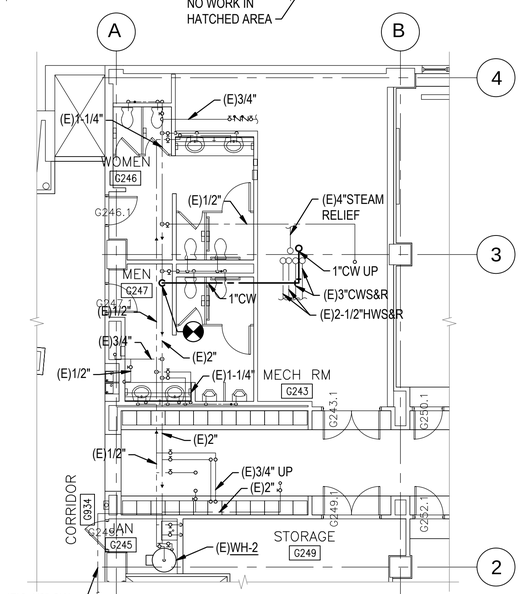

2 GROUND FLOOR
1/8"=1'-0"

NOTES

1. ROUTE THE TWO 3/4" CW UP THROUGH THE ROOF PER DETAIL 1/M-001, AND PROVIDE NON-FREEZE ROOF HYDRANTS WITH THREADED CONNECTIONS AND DRAIN CONNECTION. ONE SHALL SERVE THE IRRIGATION SYSTEM CONTROLLER AND THE OTHER WILL BE AVAILABLE FOR MAINTENANCE STAFF TO CONNECT A HOSE TO ALLOW MANUAL WASHDOWN OF THE PATIO SPACE.
2. REINSTALL TEMPORARILY SUPPORTED EQUIPMENT, DUCT, AND AIR DEVICES RETAINED DURING DEMOLITION ABOVE NEW CEILING. PROVIDE HANGERS AND SUPPORTS. BALANCE SUPPLY DIFFUSERS TO INDICATED CFM.
3. PROVIDE TRANSITION FITTINGS MAINTAINING EQUAL INSIDE CLEAR DUCT AREA TO ALLOW FOR INSTALLATION BELOW NEW ROOF STRUCTURE.
4. REINSTALL THERMOSTAT TO OPERATE AS BEFORE.
5. FLARE 10x10 RETURN DUCT TO 16x10 WITH HEMMED MESH SCREEN OPENING.
6. BALANCE EXISTING VAV BOX PER SCHEDULE ON DRAWING M-001.
7. REFER TO DETAIL 6/A-501 FOR ROOF DRAIN MODIFICATION WORK. COORDINATE ELEVATION WITH SLOPE REQUIRED FOR INDICATED ROUTE TO RECONNECT TO THE STORM RISER AS INDICATED ON DRAWING M-101.

GENERAL NOTES

G1. ALL WORK SHALL BE NEW AND PROVIDED UNDER THIS CONTRACT UNLESS SPECIFICALLY MARKED EXISTING, EXIST., OR (E).

G2. VERIFY LOCATION AND DIMENSIONS OF EXISTING EQUIPMENT AND COORDINATE ALL WORK PRIOR TO THE START OF CONSTRUCTION.

G3. COORDINATE WORK WITH PHASING PLAN G-003. WORK IN GROUND FLOOR DETAIL 2/M-101 AND WORK ON FIRST FLOOR NORTH OF COLUMN LINE 2 SHALL OCCUR DURING PHASE 1. WORK ON FIRST FLOOR SOUTH OF COLUMN LINE 2 SHALL OCCUR DURING PHASE 2. WORK ON ROOF AND ON SECOND FLOOR SHALL OCCUR DURING PHASE 3.

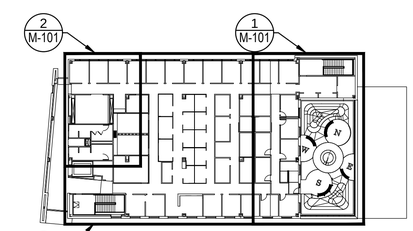

K KEY PLAN
NOT TO SCALE

SYM	DESCRIPTION	DATE	APPR
	FINAL DESIGN SUBMISSION	06/28/2023	

NAVFAC

PROFESSIONAL CERTIFICATION. I CERTIFY THAT THESE DOCUMENTS WERE PREPARED OR APPROVED BY ME AND THAT I AM A DULY LICENSED ENGINEER UNDER THE LAWS OF THE STATE OF MARYLAND, LICENSE NUMBER 52805, EXPIRATION DATE 05/31/2024

06/28/2023

SEAL

MTFA architecture
3200 LEE HIGHWAY, ARLINGTON, VA 22207
(703) 524 - 6616 www.mtfa.net

SUMMER CONSULTANTS INCORPORATED
7900 Westpark Dr. | Suite A405 | McLean, VA 22102
(703) 556-8820 | www.summerconsultants.com
A/E INFO

APPROVED

FOR COMMANDER NAVFAC

ACTIVITY
FINAL DESIGN SUBMISSION

SATISFACTORY TO DATE

DES STB DRW STB CHK VT

PM/DM

BRANCH MANAGER

CHIEF ENG/ARCH

FIRE PROTECTION

DEPARTMENT OF THE NAVY
NAVAL FACILITIES ENGINEERING SYSTEMS COMMAND
PUBLIC WORKS DEPARTMENT, BETHESDA

NAVAL FACILITIES ENGINEERING SYSTEMS COMMAND ~ WASHINGTON
NAVAL SUPPORT ACTIVITY BETHESDA, MARYLAND

UNIFORMED SERVICES UNIVERSITY OF THE HEALTH SCIENCES
BETHESDA, MD

Building 76E Roof Garden

MECHANICAL

SCALE: AS NOTED

EPROJECT NO.: 1698751

CONSTR. CONTR. NO.

NAVFAC DRAWING NO.
13148389

SHEET 32 OF 49

M-101

DRAWFORM REVISION: 25 AUGUST 2020

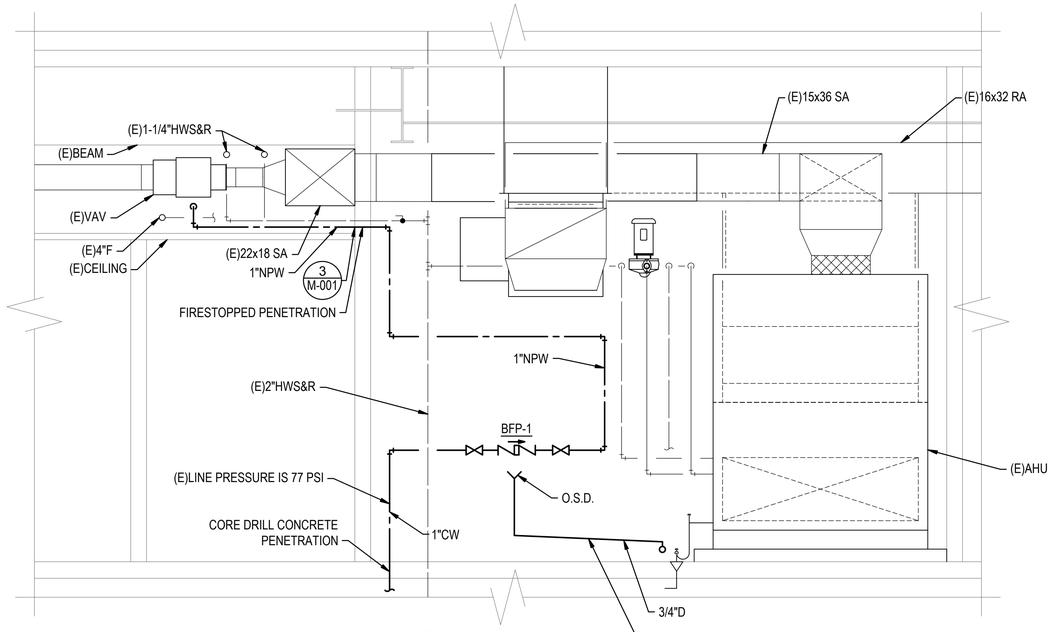

SECTION
CW LINE ROUTING

1 M-101 1/2"=1'-0"

0 2' 4'

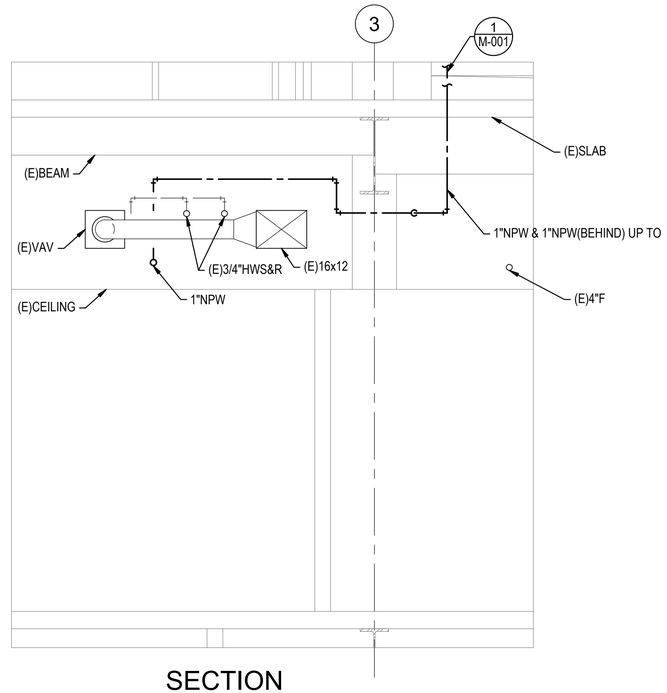

SECTION
CW LINE ROUTING

2 M-101 1/2"=1'-0"

0 2' 4'

GENERAL NOTES

G1. ALL WORK SHALL BE NEW AND PROVIDED UNDER THIS CONTRACT UNLESS SPECIFICALLY MARKED EXISTING, EXIST., OR (E).

G2. VERIFY LOCATION AND DIMENSIONS OF EXISTING EQUIPMENT AND COORDINATE ALL WORK PRIOR TO THE START OF CONSTRUCTION.

G3. COORDINATE WORK WITH PHASING PLAN G-003. WORK ON FIRST FLOOR NORTH OF COLUMN LINE 2 SHALL OCCUR DURING PHASE 1. WORK ON FIRST FLOOR SOUTH OF COLUMN LINE 2 SHALL OCCUR DURING PHASE 2. WORK ON ROOF AND ON SECOND FLOOR SHALL OCCUR DURING PHASE 3.

NOTES

1. NOT USED

SYM	DESCRIPTION	DATE	APPR
	FINAL DESIGN SUBMISSION	06/28/2023	

PROFESSIONAL CERTIFICATION. I CERTIFY THAT THESE DOCUMENTS WERE PREPARED OR APPROVED BY ME AND THAT I AM A DULY LICENSED ENGINEER UNDER THE LAWS OF THE STATE OF MARYLAND, LICENSE NUMBER 52805, EXPIRATION DATE 05/31/2024

06/28/2023

SEAL

MTFA architecture
3200 LEE HIGHWAY, ARLINGTON, VA 22207
(703) 524 - 6616 www.mtfa.net

SUMMER CONSULTANTS INCORPORATED
7900 Westpark Dr. | Suite A405 | McLean, VA 22102
(703) 556-8820 | www.summerconsultants.com
A/E INFO

APPROVED

FOR COMMANDER NAVFAC

ACTIVITY

FINAL DESIGN SUBMISSION

SATISFACTORY TO DATE

DES STB DRW STB CHK VT

PM/DM

BRANCH MANAGER

CHIEF ENG/ARCH

FIRE PROTECTION

DEPARTMENT OF THE NAVY
NAVAL FACILITIES ENGINEERING SYSTEMS COMMAND
PUBLIC WORKS DEPARTMENT, BETHESDA

NAVAL FACILITIES ENGINEERING SYSTEMS COMMAND ~ WASHINGTON
NAVAL SUPPORT ACTIVITY BETHESDA, MARYLAND

UNIFORMED SERVICES UNIVERSITY OF THE HEALTH SCIENCES

BETHESDA, MD

Building 76E Roof Garden

MECHANICAL SECTIONS

SCALE: AS NOTED

EPROJECT NO.: 1698751

CONSTR. CONTR. NO.

NAVFAC DRAWING NO.
13148390

SHEET 33 OF 49

M-301

DRAWFORM REVISION: 25 AUGUST 2020

FILE NAME: 171.43 M-301.DWG
OUR REF: 171.43
PLOT DATE: 6/20/2023 11:11:43 AM

ABBREVIATIONS

A	AMPERES.
ACT	ABOVE COUNTER TOP.
AF	FRAME SIZE IN AMPERES.
AFF	ABOVE FINISHED FLOOR.
AHU	AIR HANDLING UNIT.
ALL	NOTE OR LIGHTING FIXTURE TYPE APPLIES TO ALL DEVICES IN THIS ROOM.
AT	TRIP SIZE IN AMPERES.
ATS	AUTOMATIC TRANSFER SWITCH.
AWG.	AMERICAN WIRE GAUGE.
BATT	BATTERY BACK-UP.
BCT	BELOW COUNTER TOP.
BLDG.	BUILDING.
BW	BELOW WINDOW.
C/B	CIRCUIT BREAKER.
CBM	CERTIFIED BALLAST MANUFACTURERS.
(E)	EXISTING.
EC	EMPTY CONDUIT.
EMT	ELECTRICAL METALLIC TUBING.
(ETR)	EXISTING TO REMAIN.
FLA	FULL LOAD AMPERES.
FVNR	FULL VOLTAGE NON-REVERSING.
GFCI	GOVERNMENT FURNISHED, CONTRACTOR INSTALLED.
GFI	GROUND FAULT INTERRUPTER.
GRD.	GROUND CONDUCTOR.
H-O-A	HAND-OFF-AUTOMATIC SELECTOR SWITCH.
KAIC	THOUSAND AMPERE INTERRUPTING CAPACITY.
KW	KILO-WATTS.
M.L.O.	MAIN LUGS ONLY.
N.C.	NORMALLY CLOSED.
N.E.C.	NATIONAL ELECTRICAL CODE.
NEMA	NATIONAL ELECTRICAL MANUFACTURER'S ASSOCIATION.
NFSS	NON-FUSED SAFETY SWITCH.
N.O.	NORMALLY OPEN.
P	NUMBER OF POLES.
PH.	NUMBER OF PHASES.
REC.	RECEPTACLE.
RGS	RIGID GALVANIZED STEEL.
U.L.	UNDERWRITER'S LABORATORIES.
V	VOLTAGE.
VFD	VARIABLE FREQUENCY DRIVE.
WP	WEATHERPROOF, OR NEMA 3R ENCLOSURE.

SYMBOLS

#10 / 207 / 1,3,5 — BRANCH CIRCUIT CONDUIT AND CONDUCTORS RUN EXPOSED ON WALLS AND CEILINGS. SIZE IN ACCORDANCE WITH N.E.C. RACEWAY SHALL BE MINIMUM 1/2" EMT, AND CONDUCTORS SHALL BE MINIMUM SIZE #12 AWG COPPER WITH THHN/THWN INSULATION, UNLESS OTHER SIZES ARE SPECIFICALLY NOTED. METAL CLAD (MC) CABLE SHALL BE PROHIBITED, EXCEPT FOR FINAL EQUIPMENT CONNECTIONS. NO MC CABLE SHALL BE RUN SURFACE MOUNTED ON WALLS.

HOME RUN TO PANEL. NUMBER OF ARROWS INDICATE THE NUMBER OF CIRCUITS.

NUMBER OF SLASH MARKS INDICATE THE NUMBER OF CONDUCTORS IN RACEWAY. NO SLASH MARKS INDICATE 2 CIRCUIT CONDUCTORS PLUS A GROUND CONDUCTOR.

GREEN GROUND CONDUCTOR RUN IN RACEWAY.

207 — PANEL NAME TO WHICH CIRCUITS RUN.

1,3,5 — CIRCUIT BREAKERS IN PANEL SERVING THESE CIRCUITS.

#10 — WIRE SIZE IN AWG. SIZE NOT SHOWN INDICATES #12 AWG.

#10 / 207 / 1,3,5 — BRANCH CIRCUIT CONDUIT AND CONDUCTORS RUN CONCEALED WITHIN WALLS AND CONCEALED ABOVE SUSPENDED TILE CEILINGS. ALL OTHER BRANCH CIRCUIT CHARACTERISTICS SAME AS SHOWN ABOVE.

EXIT SIGN WITH EMERGENCY BATTERY PACK, UNIVERSAL MOUNT, SEE ASSOCIATED LIGHTING FIXTURE TYPE DETAIL ON DRAWING E-501 FOR CHARACTERISTICS. ARROW DENOTES DIRECTION OF EXIT.

CEILING MOUNTED, 2 SIDED.

WALL MOUNTED, 1 SIDED.

S — LIGHT SWITCH, FLUSH TUMBLER, SINGLE POLE, 20 AMPERE, 120/277V, A.C. ONLY, RECESS MOUNTED IN 4" SQUARE x 2-1/8" DEEP PRESSED STEEL DEVICE BOX WITH MATCHING STEEL PAINTED WHITE COVER PLATE, MOUNTED AT 48" ABOVE FINISHED FLOOR UNLESS OTHER MOUNTING HEIGHT IS NOTED.

TELECOMMUNICATIONS OUTLET.

LIGHTING FIXTURE.

SP — CEILING MOUNTED ADDRESSABLE SPEAKER.

SYMBOLS

FLOOR PLAN AND DETAIL TITLES:

UNIQUE PLAN OR DETAIL NUMBER ON THIS DRAWING

NAME OF PLAN OR DETAIL

NORTH ARROW

2 FLOOR PLAN

E-101, E-102 1/8"=1'-0" 0 8"

ALL DRAWINGS WHERE THIS DETAIL IS REFERENCED FROM

GRAPHIC SCALE OF THIS PLAN OR DETAIL

2-PART REFERENCE DETAIL IDENTIFICATION:

2 E-101 — NUMBER INDICATES DETAIL/SECTION; SHEET NUMBER WHERE DETAIL/SECTION IS DRAWN

SECTION IDENTIFICATION

2 E-101 — NUMBER INDICATES SECTION; INDICATES DIRECTION OF CUTTING PLANE; SHEET NUMBER WHERE SECTION IS DRAWN

1 — NOTE REFERENCE NUMBER.

2 — COLUMN LINE NUMBER.

1 — DRAWING REVISION NUMBER.

℄ — CENTER LINE.

UP — CONDUIT UP.

DN — CONDUIT DOWN.

△ — DELTA CONFIGURATION.

Y — WYE GROUNDING CONFIGURATION.

Ø — PHASE.

CIRCUIT BREAKER TYPE PANELBOARD (PANEL) AS SHOWN ON FLOOR PLANS. PROVIDE EACH PANEL WITH A SURGE PROTECTIVE DEVICE. SEE DRAWING E-501 FOR ALL LABELING REQUIREMENTS.

DUPLEX RECEPTACLE, 20 AMPERE, 125 VOLT GROUNDING TYPE, NEMA 5-20R CONFIGURATION, RECESS MOUNTED IN 4" SQUARE x 2-1/8" DEEP PRESSED STEEL DEVICE BOX WITH MATCHING STEEL PAINTED WHITE COVER PLATE, MOUNTED AT 18" ABOVE FINISHED FLOOR, UNLESS OTHER MOUNTING HEIGHT IS INDICATED. PROVIDE A TYPE-WRITTEN LABEL ON EACH RECEPTACLE COVER PLATE STATING THE SERVING PANEL AND ASSOCIATED CIRCUIT NUMBER.

GFI — SURFACE MOUNTED, GROUND FAULT INTERRUPTER TYPE, DUPLEX RECEPTACLE, 20 AMPERE, 125 VOLT GROUNDING TYPE, NEMA 5-20R CONFIGURATION, MOUNTED AT 18" ABOVE FINISHED FLOOR UNLESS OTHER MOUNTING HEIGHT IS INDICATED.

SYM	DESCRIPTION	DATE	APPR
	FINAL DESIGN SUBMISSION	06/28/2023	

PROFESSIONAL CERTIFICATION. I HEREBY CERTIFY THAT THESE DOCUMENTS WERE PREPARED OR APPROVED BY ME, AND THAT I AM A DULY LICENSED PROFESSIONAL ENGINEER UNDER THE LAWS OF THE STATE OF MARYLAND, LICENSE NO. 20087, WITH EXPIRATION DATE OF 06/22/2025.

06/28/2023 SEAL

MTFA architecture
3200 LEE HIGHWAY, ARLINGTON, VA 22207
(703) 524 - 6616 www.mtfa.net

SUMMER CONSULTANTS INCORPORATED
7900 Westpark Dr. | Suite A405 | McLean, VA 22102
(703) 556-8820 | www.summerconsultants.com
A/E INFO

APPROVED

FOR COMMANDER NAVFAC

ACTIVITY: FINAL DESIGN SUBMISSION

SATISFACTORY TO DATE

DES	PB	DRW	PB	CHK	CPC

PM/DM

BRANCH MANAGER

CHIEF ENG/ARCH

FIRE PROTECTION

DEPARTMENT OF THE NAVY
NAVAL FACILITIES ENGINEERING SYSTEMS COMMAND
PUBLIC WORKS DEPARTMENT, BETHESDA
NAVAL FACILITIES ENGINEERING SYSTEMS COMMAND – WASHINGTON
NAVAL SUPPORT ACTIVITY BETHESDA, MARYLAND
UNIFORMED SERVICES UNIVERSITY OF THE HEALTH SCIENCES
BETHESDA, MD
Building 76E Roof Garden
SYMBOLS AND ABBREVIATIONS

SCALE: AS NOTED

EPROJECT NO.: 1698751

CONSTR. CONTR. NO.

NAVFAC DRAWING NO. 13148391

SHEET 34 OF 49

E-001

DRAWFORM REVISION: 25 AUGUST 2020

FILE NAME: 171.43 E-001.DWG
OUR REF: 171.43
PLOT DATE: 6/20/2023 11:11:49 AM

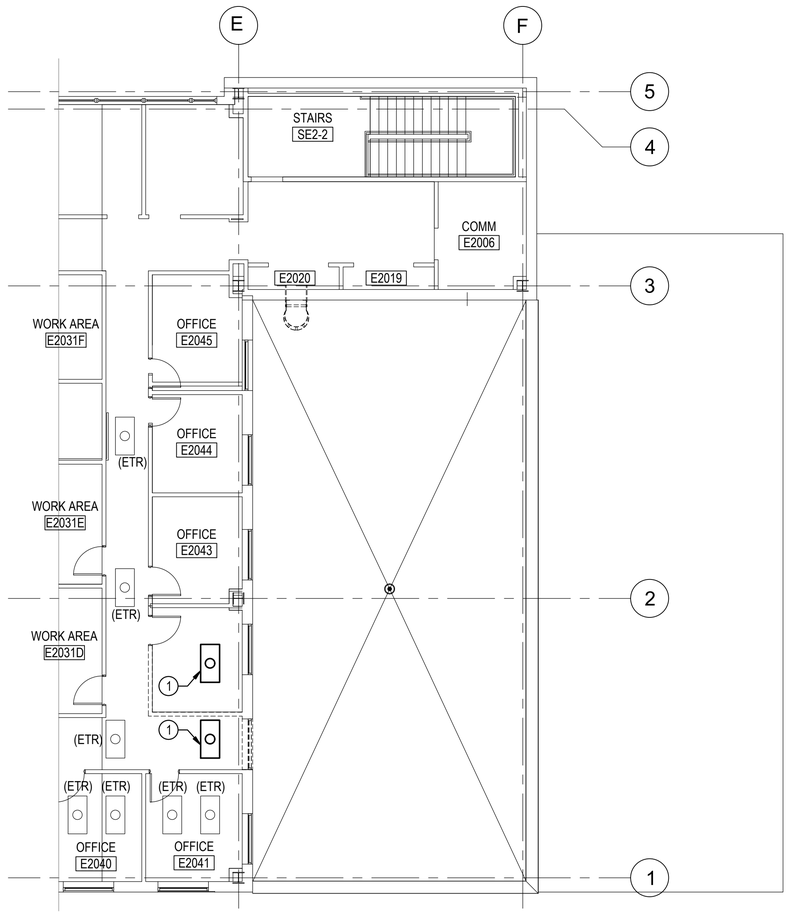

2 SECOND FLOOR PLAN - LIGHTING - DEMOLITION

1/8"=1'-0" 0 8' 16'

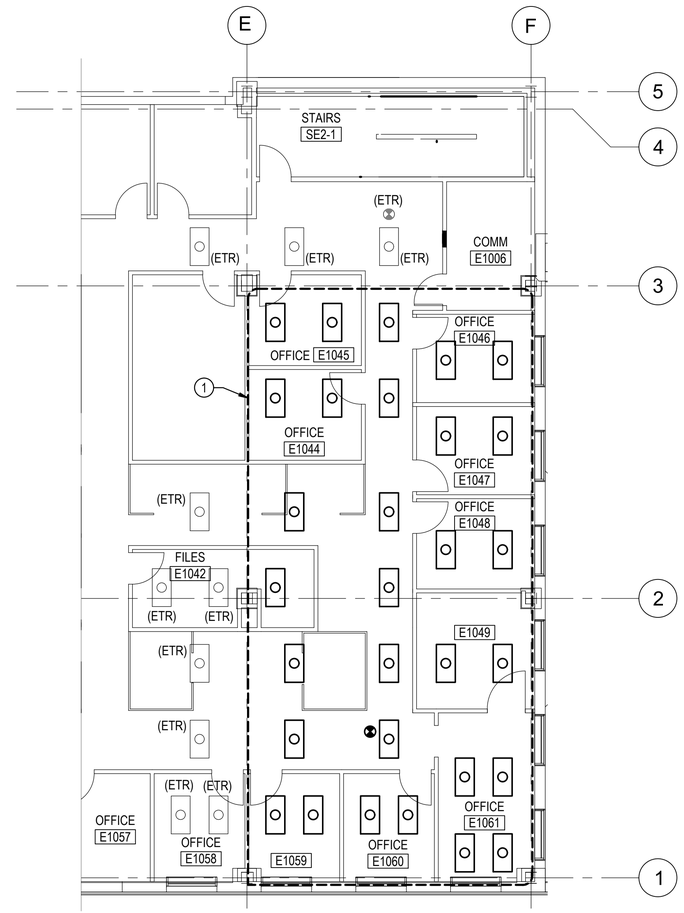

1 FIRST FLOOR PLAN - LIGHTING - DEMOLITION

1/8"=1'-0" 0 8' 16'

GENERAL NOTES

G1. VERIFY LOCATION AND DIMENSIONS OF EXISTING EQUIPMENT AND COORDINATE ALL WORK PRIOR TO THE START OF CONSTRUCTION.

G3. COORDINATE WORK WITH PHASING PLAN G-003. WORK IN GROUND FL DETAIL 2/M-101 AND WORK ON FIRST FLOOR NORTH OF COLUMN LINE SHALL OCCUR DURING PHASE 1. WORK ON FIRST FLOOR SOUTH OF COLUMN LINE 2 SHALL OCCUR DURING PHASE 2. WORK ON ROOF AND SECOND FLOOR SHALL OCCUR DURING PHASE 3.

NOTES

1. CAREFULLY DISCONNECT AND TAKE DOWN ALL LIGHTING FIXTURES AND EXIT SIGNS IN THE AREA INDICATED. CLEAN, RELAMP AND STORE FOR REUSE UNDER THIS PROJECT. PROTECT AND TAG ASSOCIATED BRANCH CIRCUIT WIRING FOR REUSE UNDER THIS PROJECT.

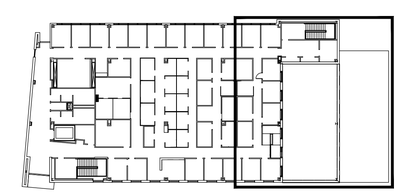

K KEY PLAN

NOT TO SCALE

SYM	DESCRIPTION	DATE	APPR
	FINAL DESIGN SUBMISSION	06/28/2023	

PROFESSIONAL CERTIFICATION. I HEREBY CERTIFY THAT THESE DOCUMENTS WERE PREPARED OR APPROVED BY ME, AND THAT I AM A DULY LICENSED PROFESSIONAL ENGINEER UNDER THE LAWS OF THE STATE OF MARYLAND, LICENSE NO. 20087, WITH EXPIRATION DATE OF 06/22/2025.

06/28/2023

SEAL

MTFA architecture
3200 LEE HIGHWAY, ARLINGTON, VA 22207
(703) 524 - 6616 www.mtfa.net

SUMMER CONSULTANTS INCORPORATED
7900 Westpark Dr. | Suite A405 | McLean, VA 22102
(703) 556-8820 | www.summerconsultants.com
A/E INFO

APPROVED

FOR COMMANDER NAVFAC

ACTIVITY
FINAL DESIGN SUBMISSION

SATISFACTORY TO DATE

DES STB DRW STB CHK CPC

PM/DM

BRANCH MANAGER

CHIEF ENG/ARCH

FIRE PROTECTION

DEPARTMENT OF THE NAVY
NAVAL FACILITIES ENGINEERING SYSTEMS COMMAND ~ WASHINGTON
PUBLIC WORKS DEPARTMENT, BETHESDA
NAVAL FACILITIES ENGINEERING SYSTEMS COMMAND
NAVAL SUPPORT ACTIVITY, BETHESDA, MARYLAND
UNIFORMED SERVICES UNIVERSITY OF THE HEALTH SCIENCES
BETHESDA, MD
Building 76E Roof Garden
FLOOR PLANS - LIGHTING - DEMOLITION

SCALE: AS NOTED

EPROJECT NO.: 1698751

CONSTR. CONTR. NO.

NAVFAC DRAWING NO.
13148392

SHEET 35 OF 49

ED101

DRAWFORM REVISION: 25 AUGUST 2020

FILE NAME: 171.43 ED101.DWG
OUR REF: 171.43
PLOT DATE: 6/20/2023 11:11:54 AM

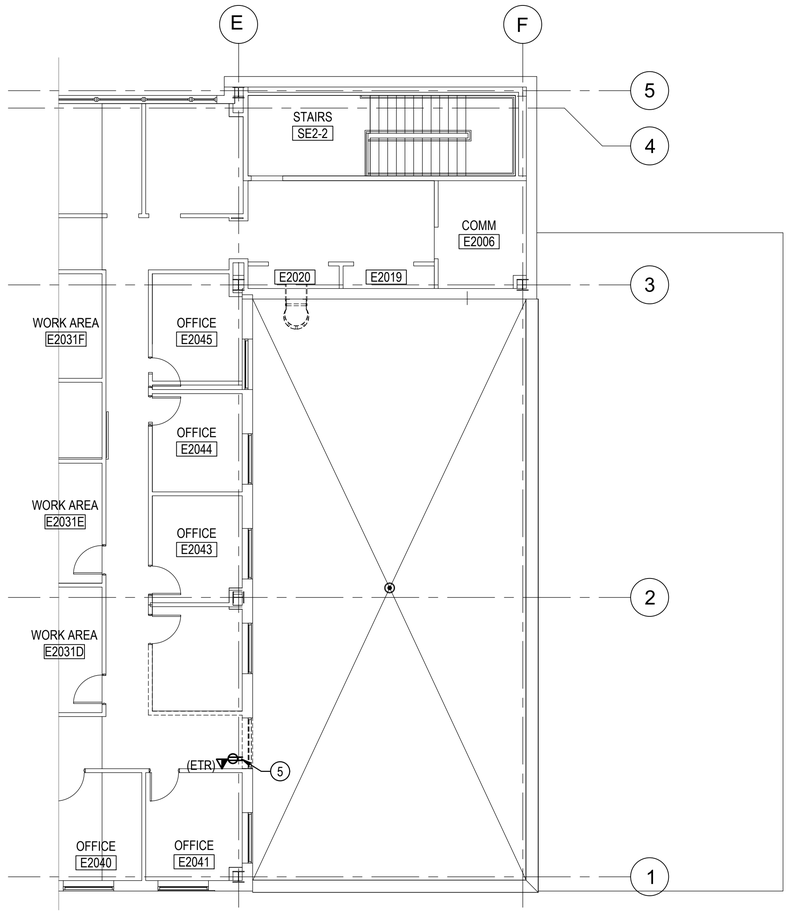

2 SECOND FLOOR PLAN - POWER - DEMOLITION

1/8"=1'-0" 0 8' 16'

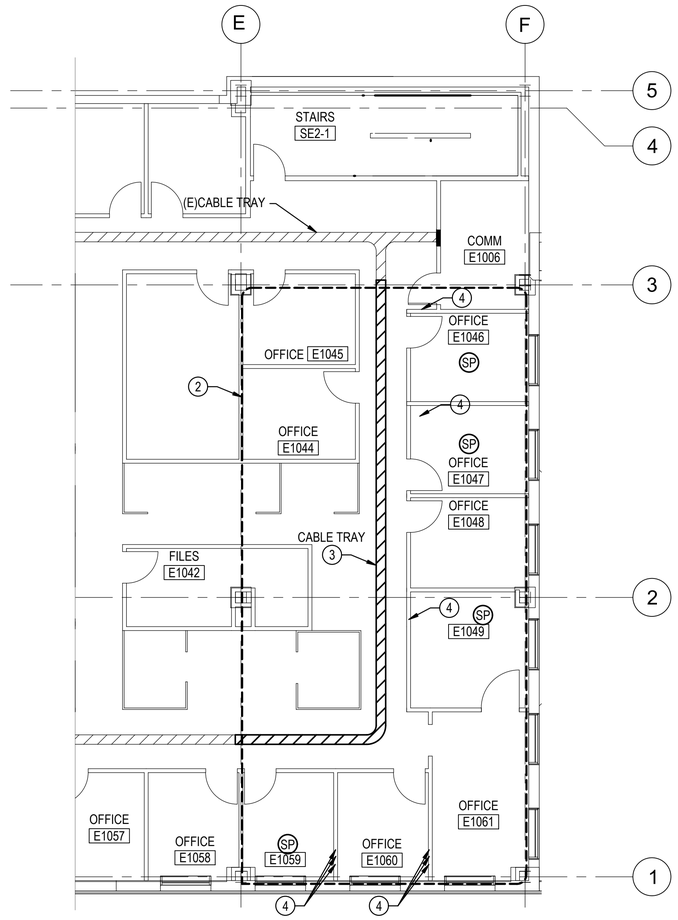

1 FIRST FLOOR PLAN - POWER - DEMOLITION

1/8"=1'-0" 0 8' 16'

GENERAL NOTES

G1. VERIFY LOCATION AND DIMENSIONS OF EXISTING EQUIPMENT AND COORDINATE ALL WORK PRIOR TO THE START OF CONSTRUCTION.

G3. COORDINATE WORK WITH PHASING PLAN G-003. WORK IN GROUND FLOOR DETAIL 2/M-101 AND WORK ON FIRST FLOOR NORTH OF COLUMN LINE 2 SHALL OCCUR DURING PHASE 1. WORK ON FIRST FLOOR SOUTH OF COLUMN LINE 2 SHALL OCCUR DURING PHASE 2. WORK ON ROOF AND ON SECOND FLOOR SHALL OCCUR DURING PHASE 3.

NOTES

1. NOT USED.
2. CAREFULLY DISCONNECT AND TAKE DOWN CEILING MOUNTED PUBLIC ADDRESS SPEAKER AND STORE FOR REUSE UNDER THIS PROJECT. PROTECT AND TAG BRANCH CIRCUIT WIRING FOR REUSE UNDER THIS PROJECT.
3. RETAIN EXISTING TELECOMMUNICATIONS CABLE TRAY IN PLACE DURING CONSTRUCTION. PROVIDE INDEPENDENT SUPPORTS TO THE CABLE TRAY. PROVIDE PROTECTION AROUND CABLE TRAY AND ASSOCIATED CABLING DURING CONSTRUCTION.CEILING WITHIN THE AREA OF WORK FOR THIS PROJECT.
4. CAREFULLY DISCONNECT BRANCH CIRCUIT CONDUIT AND CONDUCTORS SUPPORTED FROM OR MOUNTED TO EXISTING STRUCTURAL BEAM ABOVE. RE-ROUTE BRANCH CIRCUIT CONDUIT AND CONDUCTORS IN ACCORDANCE WITH LOWER BEAM HEIGHT.
5. DISCONNECT AND REMOVE RECESS MOUNTED RECEPTACLE, AND REMOVE BRANCH CIRCUIT CONDUIT AND CONDUCTORS BACK TO NEXT EXISTING DEVICE TO REMAIN. PROVIDE BRANCH CIRCUIT CONDUIT AND CONDUCTORS AND RECONNECT EXISTING TO REMAIN BRANCH CIRCUIT DEVICES TO OPERATE AS BEFORE.

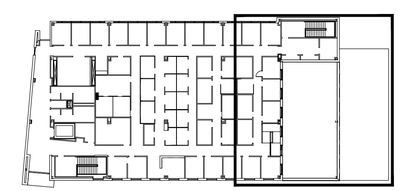

K KEY PLAN

NOT TO SCALE

SYM	DESCRIPTION	DATE	APPR
	FINAL DESIGN SUBMISSION	06/28/2023	

PROFESSIONAL CERTIFICATION. I HEREBY CERTIFY THAT THESE DOCUMENTS WERE PREPARED OR APPROVED BY ME, AND THAT I AM A DULY LICENSED PROFESSIONAL ENGINEER UNDER THE LAWS OF THE STATE OF MARYLAND, LICENSE NO. 20087, WITH EXPIRATION DATE OF 06/22/2025.

06/28/2023

SEAL

MTFA architecture
3200 LEE HIGHWAY, ARLINGTON, VA 22207
(703) 524 - 6616 www.mtfa.net

SUMMER CONSULTANTS INCORPORATED
7900 Westpark Dr. | Suite A405 | McLean, VA 22102
(703) 556-8820 | www.summerconsultants.com
A/E INFO

APPROVED

FOR COMMANDER NAVFAC

ACTIVITY
FINAL DESIGN SUBMISSION

SATISFACTORY TO DATE

DES	DRW	CHK
XXX	XXX	XXX

PM/DM

BRANCH MANAGER

CHIEF ENG/ARCH

FIRE PROTECTION

DEPARTMENT OF THE NAVY
NAVAL FACILITIES ENGINEERING SYSTEMS COMMAND
PUBLIC WORKS DEPARTMENT, BETHESDA

NAVAL FACILITIES ENGINEERING SYSTEMS COMMAND – WASHINGTON
NAVAL SUPPORT ACTIVITY BETHESDA, MARYLAND
BETHESDA, MD

UNIFORMED SERVICES UNIVERSITY OF THE HEALTH SCIENCES

Building 76E Roof Garden

FLOOR PLANS - POWER - DEMOLITION

SCALE: AS NOTED

EPROJECT NO.: 1698751

CONSTR. CONTR. NO.

NAVFAC DRAWING NO.
13148393

SHEET 36 OF 49

ED102

DRAWFORM REVISION: 25 AUGUST 2020

FILE NAME: 171.43 ED102.DWG
OUR REF: 171.43
PLOT DATE: 6/20/2023 11:12:00 AM

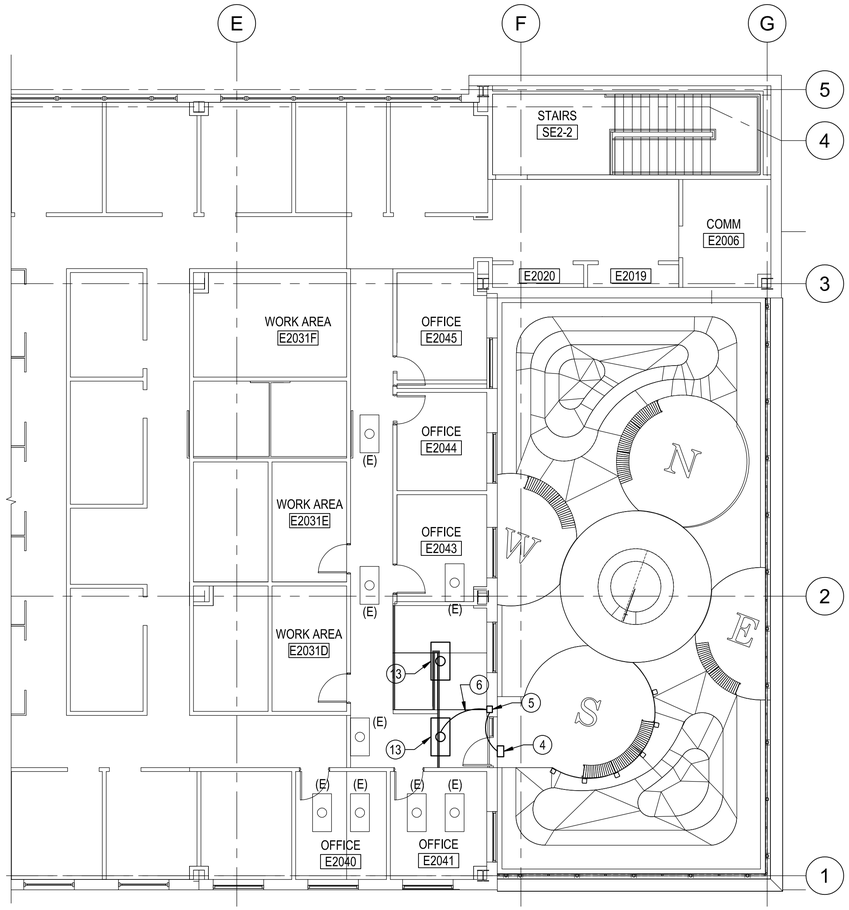

2 SECOND FLOOR PLAN - LIGHTING

1/8"=1'-0"

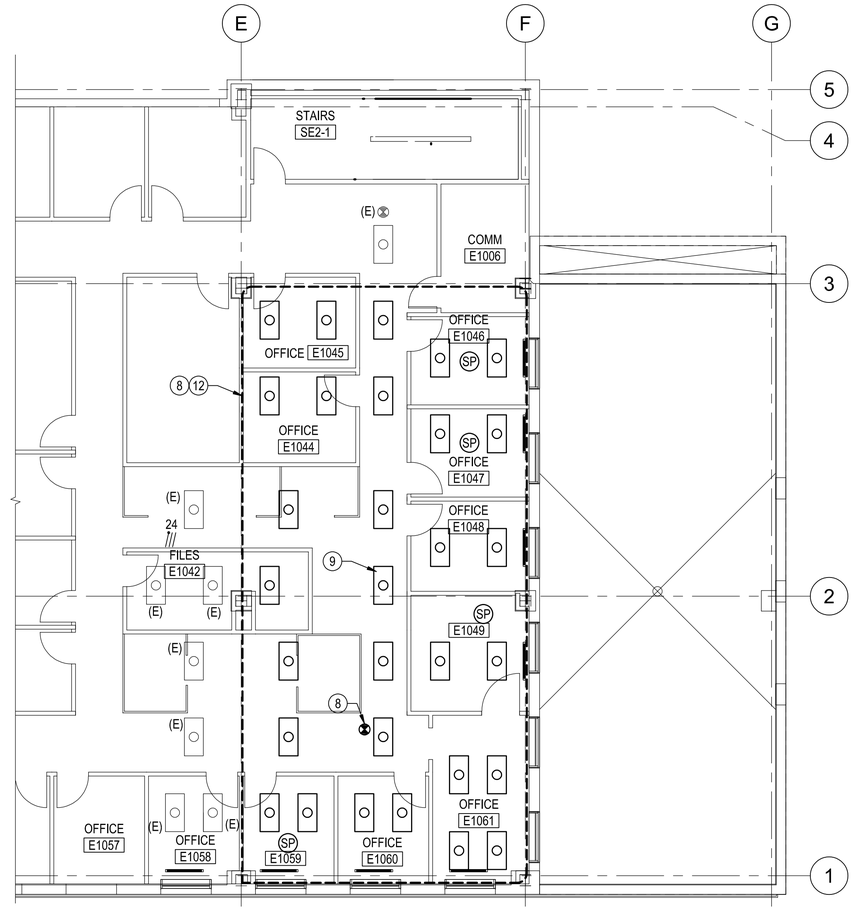

1 FIRST FLOOR PLAN - LIGHTING

1/8"=1'-0"

GENERAL NOTES

G1. ALL WORK SHALL BE NEW AND PROVIDED UNDER THIS CONTRACT UNLESS SPECIFICALLY MARKED "EXISTING", "EXIST", OR "(E)".

G2. VERIFY LOCATION AND DIMENSIONS OF EXISTING EQUIPMENT AND COORDINATE ALL WORK PRIOR TO THE START OF CONSTRUCTION.

G3. COORDINATE WORK WITH PHASING PLAN G-003. WORK IN GROUND FLOOR DETAIL 2/M-101 AND WORK ON FIRST FLOOR NORTH OF COLUMN LINE 2 SHALL OCCUR DURING PHASE 1. WORK ON FIRST FLOOR SOUTH OF COLUMN LINE 2 SHALL OCCUR DURING PHASE 2. WORK ON ROOF AND ON SECOND FLOOR SHALL OCCUR DURING PHASE 3.

NOTES

1. CONNECT 120V BRANCH CIRCUIT WIRING TO EXISTING 20A, SINGLE CIRCUIT BREAKER 24 IN EXISTING 120V PANEL C1. PROVIDE AN UPDATED TYPE WRITTEN PANEL DIRECTORY.

2. SEE DRAWING E-102 FOR ROUTING OF BRANCH CIRCUIT WIRING.

3. NOT USED.

4. PROVIDE A SURFACE MOUNTED EXTERIOR L.E.D. LIGHT FIXTURE, APPROXIMATE DIMENSIONS OF 12" HIGH x 7.5" WIDE BLACK PAINTED HOUSING WTH POLYCARBONATE LENS, 277V, 2,700 LUMENS, 4000 COLOR TEMPERATURE, 22 WATTS MAXIMUM, L81 LUMEN MAINTENANCE AT OVER 100,000 HOURS, WITH INTEGRAL PHOTOCELL. MOUNT DIRECTLY ABOVE THE DOOR FRAME, OR BESIDE THE DOOR AT 80" ABOVE THE ROOF.

5. PROVIDE A 4-BUTTON, 1-HOUR MAXIMUM (10 MINUTES, 20 MINUTES, 30 MINUTES, 60 MINUTES) 277V, SINGLE POLE TIMER SWITCH. RECESS MOUNT SWITCH AT 48" ABOVE THE FINISHED FLOOR INSIDE THE BUILDING. PROVIDE A TYPE WRITTEN LABEL ON THE SWITCH COVER PLATE STATING "ROOF GARDEN LIGHT".

6. CONNECT TO THE EXISTING 277V LIGHTING CIRCUIT HOT LEG.

7. NOT USED.

8. AFTER THE WORK OF THE PROJECT IS COMPLETE, REINSTALL LIGHTING FIXTURES STORED FOR REUSE. PROVIDE BRANCH CIRCUIT CONDUIT AND CONDUCTORS AND RECONNECT TO OPERATE AS BEFORE.

9. NOT USED.

10. AFTER THE WORK OF THE PROJECT IS COMPLETE, REINSTALL LIGHTING FIXTURE STORED FOR REUSE IN THE ORIGINAL LOCATION. PROVIDE BRANCH CIRCUIT CONDUIT AND CONDUCTORS AND CONNECT TO THE EXISTING CORRIDOR LIGHTING CIRCUIT.

11. NOT USED.

12. NOT USED.

13. AFTER THE WORK OF THE PROJECT IS COMPLETE, REINSTALL LIGHTING FIXTURE STORED FOR REUSE AT LOCATION SHOWN. PROVIDE BRANCH CIRCUIT CONDUIT AND CONDUCTORS AND CONNECT TO THE EXISTING CORRIDOR LIGHTING CIRCUIT.

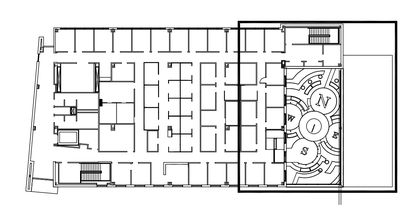

K KEY PLAN

NOT TO SCALE

SYM	DESCRIPTION	DATE	APPR
	FINAL DESIGN SUBMISSION	06/28/2023	

NAVFAC

PROFESSIONAL CERTIFICATION. I HEREBY CERTIFY THAT THESE DOCUMENTS WERE PREPARED OR APPROVED BY ME, AND THAT I AM A DULY LICENSED PROFESSIONAL ENGINEER UNDER THE LAWS OF THE STATE OF MARYLAND, LICENSE NO. 20087, WITH EXPIRATION DATE OF 06/22/2025.

06/28/2023

SEAL

MTFA architecture
3200 LEE HIGHWAY, ARLINGTON, VA 22207
(703) 524 - 6616 www.mtfa.net

SUMMER CONSULTANTS INCORPORATED
7900 Westpark Dr. | Suite A405 | McLean, VA 22102
(703) 556-8820 | www.summerconsultants.com
A/E INFO

APPROVED

FOR COMMANDER NAVFAC

ACTIVITY

FINAL DESIGN SUBMISSION

SATISFACTORY TO DATE

DES PB DRW PB CHK CPC

PM/DM

BRANCH MANAGER

CHIEF ENG/ARCH

FIRE PROTECTION

DEPARTMENT OF THE NAVY
NAVAL FACILITIES ENGINEERING SYSTEMS COMMAND
PUBLIC WORKS DEPARTMENT BETHESDA

NAVAL FACILITIES ENGINEERING SYSTEMS COMMAND ~ WASHINGTON
NAVAL SUPPORT ACTIVITY BETHESDA, MARYLAND

UNIFORMED SERVICES UNIVERSITY OF THE HEALTH SCIENCES

BETHESDA, MD

Building 76E Roof Garden

FLOOR PLANS - LIGHTING

SCALE: AS NOTED

EPROJECT NO.: 1698751

CONSTR. CONTR. NO.

NAVFAC DRAWING NO.
13148394

SHEET 37 OF 49

E-101

DRAWFORM REVISION: 25 AUGUST 2020

FILE NAME: 171.43 E-101.DWG
OUR REF: 171.43
PLOT DATE: 6/28/2023 1:16:23 PM

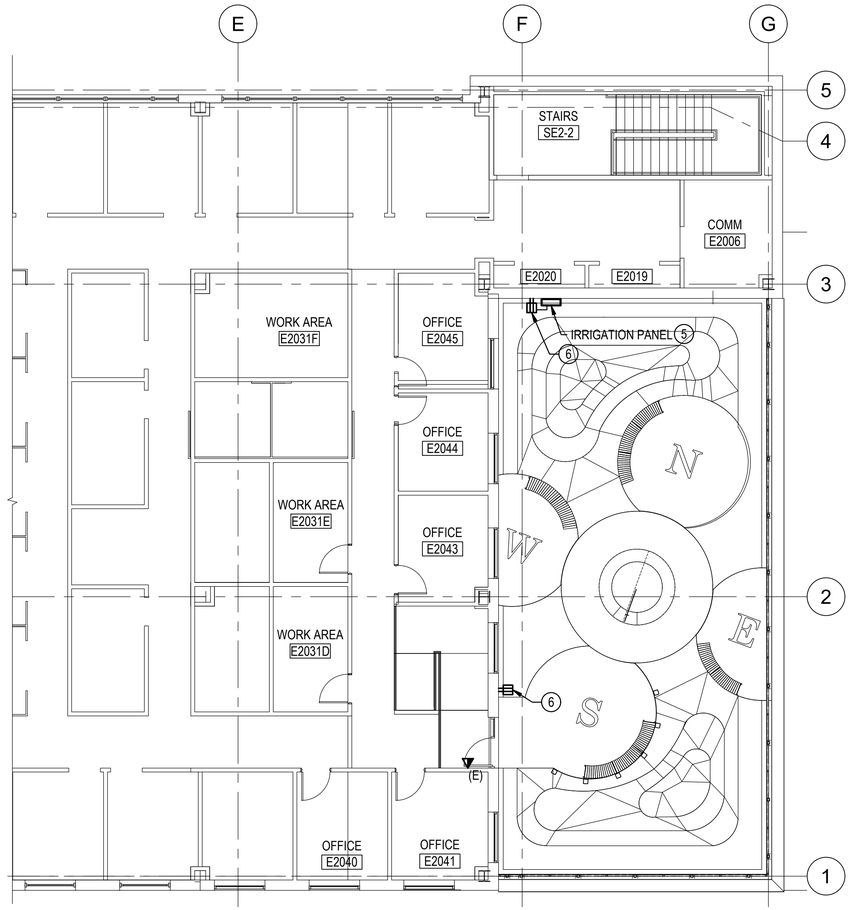

2 SECOND FLOOR PLAN - POWER

1/8"=1'-0"

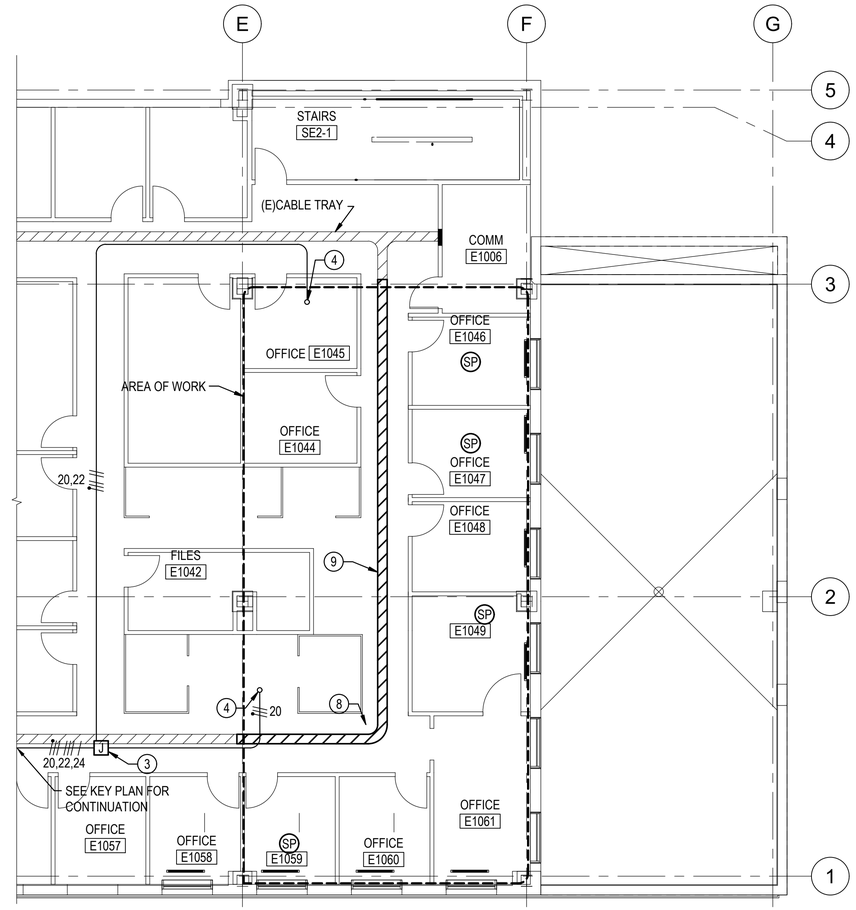

1 FIRST FLOOR PLAN - POWER

1/8"=1'-0"

GENERAL NOTES

G1. ALL WORK SHALL BE NEW AND PROVIDED UNDER THIS CONTRACT UNLESS SPECIFICALLY MARKED "EXISTING", "EXIST", OR "(E)".

G2. VERIFY LOCATION AND DIMENSIONS OF EXISTING EQUIPMENT AND COORDINATE ALL WORK PRIOR TO THE START OF CONSTRUCTION.

G3. COORDINATE WORK WITH PHASING PLAN G-003. WORK IN GROUND FLOOR DETAIL 2/M-101 AND WORK ON FIRST FLOOR NORTH OF COLUMN LINE 2 SHALL OCCUR DURING PHASE 1. WORK ON FIRST FLOOR SOUTH OF COLUMN LINE 2 SHALL OCCUR DURING PHASE 2. WORK ON ROOF AND ON SECOND FLOOR SHALL OCCUR DURING PHASE 3.

NOTES

1. CONNECT 120V BRANCH CIRCUIT WIRING TO (2) EXISTING 20A, SINGLE CIRCUIT BREAKERS 20 AND 22 IN EXISTING 120V PANEL C1. PROVIDE AN UPDATED TYPE WRITTEN PANEL DIRECTORY.

2. ROUTE BRANCH CIRCUIT CONDUIT AND CONDUCTORS RUN CONCEALED ABOVE THE CEILING OF THE FIRST FLOOR.

3. PROVIDE A JUNCTION BOX SURFACE MOUNTED TO THE BUILDING STRUCTURE ABOVE THE FIRST FLOOR CEILING. PROVIDE A TYPE WRITTEN LABEL IDENTIFYING THE ASSOCIATED PANEL NAME AND BRANCH CIRCUIT NUMBERS.

4. PENETRATE THE ROOF STRUCTURE FOR THE ROUTING OF THE BRANCH CIRCUIT CONDUIT AND CONDUCTORS. SEE ARCHITECTURAL DRAWINGS FOR WEATHER SEAL AROUND CONDUIT PENETRATION.

5. CONNECT A DEDICATED 120V CIRCUIT TO THE IRRIGATION PANEL. PROVIDE A SEPARATE CIRCUIT TO THE ADJACENT RECEPTACLE.

6. PROVIDE A GROUND FAULT INTERRUPTER TYPE NEMA 5-20R DUPLEX RECEPTACLE WITH NEMA 3R WEATHER PROOF COVER SURFACE MOUNTED ON THE EXTERIOR WALL AT APPROXIMATELY 18" ABOVE THE FINISHED FLOOR. PROVIDE A TYPE WRITTEN LABEL ON THE COVER IDENTIFYING THE ASSOCIATED PANEL AND BRANCH CIRCUIT NUMBER.

7. NOT USED.

8. NOT USED.

9. AFTER THE WORK OF THE PROJECT IS COMPLETE, REINSTALL CABLE TRAY STORED FOR REUSE. REINSTALL THE EXISTING LOW-VOLTAGE TELECOMMUNICATIONS CABLES IN THE EXISTING TRAY.

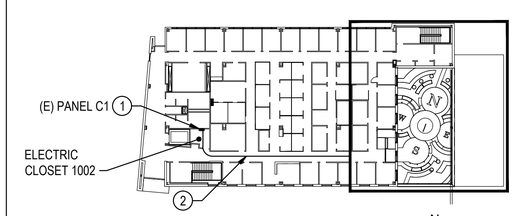

K KEY PLAN

NOT TO SCALE

SYM	DESCRIPTION	DATE	APPR
	FINAL DESIGN SUBMISSION	06/28/2023	

NAVFAC

PROFESSIONAL CERTIFICATION. I HEREBY CERTIFY THAT THESE DOCUMENTS WERE PREPARED OR APPROVED BY ME, AND THAT I AM A DULY LICENSED PROFESSIONAL ENGINEER UNDER THE LAWS OF THE STATE OF MARYLAND, LICENSE NO. 20087, WITH EXPIRATION DATE OF 06/22/2025.

STATE OF MARYLAND · CHRISTOPHER J. CILLI · REGISTERED PROFESSIONAL ENGINEER · 20087

06/28/2023

SEAL

MTFA architecture
3200 LEE HIGHWAY, ARLINGTON, VA 22207
(703) 524 - 6616 www.mtfa.net

SUMMER CONSULTANTS INCORPORATED
7900 Westpark Dr. | Suite A405 | McLean, VA 22102
(703) 556-8820 | www.summerconsultants.com
A/E INFO

APPROVED

FOR COMMANDER NAVFAC

ACTIVITY: FINAL DESIGN SUBMISSION

SATISFACTORY TO DATE

DES XXX | DRW XXX | CHK XXX

PM/DM

BRANCH MANAGER

CHIEF ENG/ARCH

FIRE PROTECTION

DEPARTMENT OF THE NAVY
NAVAL FACILITIES ENGINEERING SYSTEMS COMMAND
PUBLIC WORKS DEPARTMENT, BETHESDA

NAVAL FACILITIES ENGINEERING SYSTEMS COMMAND ~ WASHINGTON
NAVAL SUPPORT ACTIVITY BETHESDA, MARYLAND

UNIFORMED SERVICES UNIVERSITY OF THE HEALTH SCIENCES
BETHESDA, MD

Building 76E Roof Garden

FLOOR PLANS - POWER

SCALE: AS NOTED

EPROJECT NO.: 1698751

CONSTR. CONTR. NO.

NAVFAC DRAWING NO.
13148395

SHEET 38 OF 49

E-102

DRAWFORM REVISION: 25 AUGUST 2020

FILE NAME: 171.43 E-102.DWG
OUR REF: 171.43
PLOT DATE: 6/20/2023 11:12:13 AM

ABBREVIATIONS

A	AMPERES.
AC	ABOVE CEILING
ADS	ACOUSTICALLY DISTINGUISHABLE SPACE
AFF	ABOVE FINISHED FLOOR
AHJ	AUTHORITY HAVING JURISDICTION
AMP	AMPLIFIER
AS	ASPIRATING SMOKE
AWG	AMERICAN WIRE GAUGE
C	CEILING MOUNT
CA	CLEAN AGENT
CL	CEILING LEVEL
CONT.	CONTINUED
CPVC	CHLORINATED POLY-VINYL CHLORIDE
D	DRAIN
DN	DOWN
ELEV.	ELEVATOR
E.M.R.	ELEVATOR MACHINE ROOM
EMT	ELECTRICAL METALLIC TUBING
ETR	EXISTING TO REMAIN
(E)	EXISTING
F	FIRE LINE
FA	FIRE ALARM
FAAP	FIRE ALARM ANNUNCIATOR PANEL
FACP	FIRE ALARM CONTROL PANEL
FARP	FIRE ALARM RELEASING PANEL
FATC	FIRE ALARM TERMINAL CABINET
FMCP	FIRE ALARM / MASS NOTIFICATION CONTROL PANEL
FMC	FLEXIBLE METALLIC CONDUIT
LOC	LOCAL OPERATING CONSOLE
MNS	MASS NOTIFICATION SYSTEM
NAC	NOTIFICATION APPLIANCE CIRCUIT
N.I.C.	NOT IN CONTRACT
P	PHOTOELECTRIC
PA	PRE-ACTION
PVC	POLY-VINYL CHLORIDE
(R)	RELOCATE
SLC	SIGNALING LINE CIRCUIT
SP	SPRINKLER PIPING
SPD	SURGE PROTECTIVE DEVICE
TYP.	TYPICAL
U	UNDER FLOOR
VEWSD	VERY EARLY WARNING SMOKE DETECTION
WP	WEATHERPROOF
ZCA	SPRINKLER ZONE CONTROL ASSEMBLY

SYMBOLS

AREA OF WORK

MODIFICATION OF THE FIRE ALARM SYSTEM IN THIS AREA IS NOT IN CONTRACT (N.I.C.)

S — SPEAKER - CEILING MOUNTED

CD — SPEAKER / STROBE - CEILING MOUNTED
CD = CANDELA RATING

CD — STROBE - CEILING MOUNTED
CD = CANDELA RATING

GENERAL SYMBOLS

FLOOR PLAN AND DETAIL TITLES:

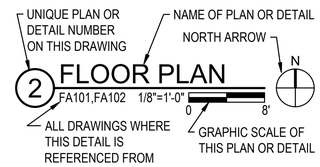

2-PART REFERENCE DETAIL IDENTIFICATION:

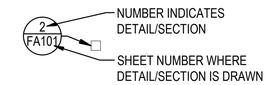

SECTION IDENTIFICATION

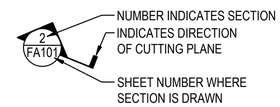

NORTH ARROW

N — ARROW INDICATES TRUE NORTH AND/OR PROJECT NORTH.

— COLUMN LINE NUMBER

1 — REVISION CLOUD WITH REVISION NUMBER DESIGNATION

BREAKLINE

MATCHLINE A-A — MATCHLINE DESIGNATION

(E) — EXISTING

POINT OF CONNECTION TO EXISTING

POINT OF TERMINATION OF REMOVAL

— NOTE NUMBER

1234 — ROOM NUMBER

FIRE ALARM REQUIREMENTS

1. MODIFY THE EXISTING FIRE ALARM AND DETECTION/MASS NOTIFICATION SYSTEM AS INDICATED IN THE DRAWINGS AND SPECIFICATIONS. PROVIDE A UFC 3-600-01 W/CHANGE 6 2021 EDITION, UFC 4-021-01 W/CHANGE 1 2010 EDITION, NFPA 70 2023 EDITION, AND NFPA 72 2022 EDITION COMPLIANT SYSTEM.
2. PROVIDE CLASS A WIRING FOR RISER, SLC, NAC, AND AMP CIRCUIT. PROVIDE MINIMUM 18 AWG FOR SLC, MINIMUM 16 FOR NAC, AND FOLLOW MANUFACTURER GUIDELINES FOR AMPLIFIER CIRCUIT SIZE.
3. PROVIDE EQUIPMENT COMPATIBLE WITH THE EXISTING GAMEWELL E3 SERIES FIRE ALARM CONTROL PANEL LOCATED ON THE PARKING LEVEL IN LOBBY UP032.
4. INSTALL FIRE ALARM AND MASS NOTIFICATION CONDUCTORS IN MINIMUM 3/4-INCH DIAMETER EMT CONDUIT. CONDUIT MUST BE RED AND MUST NOT EXCEED THE NATIONAL ELECTRICAL CODE MAXIMUM FILL CAPACITY.
5. PLACE EQUIPMENT AT CENTER OF ACOUSTICAL CEILINGS TILES.
6. DRAWINGS ARE DIAGRAMMATIC IN NATURE AND ARE NOT INTENDED TO BE USED FOR COMPLETE SYSTEM DESIGN. COORDINATE SYSTEM COMPONENTS WITH ALL OTHER DISCIPLINES AND TRADES.
7. PROVIDE A FIRE ALARM SYSTEM DESIGNER WITH A MINIMUM NICET LEVEL III CERTIFICATION IN FIRE ALARM SYSTEM TECHNOLOGY OR A LICENSED PROFESSIONAL FIRE PROTECTION ENGINEER RESPONSIBLE FOR THE FIRE ALARM SYSTEM DESIGN.
8. CHANGES TO THE DESIGN AND EQUIPMENT INSTALLATION IS THE RESPONSIBILITY OF CONTRACTOR. PROVIDE DESIGN SERVICES OF A LICENSED PROFESSIONAL FIRE PROTECTION ENGINEER.
9. EXPOSED WIRING WILL NOT BE PERMITTED IN ANY PORTION OF THE BUILDING. FLEXIBLE METALLIC CONDUIT NOT EXCEEDING 6 FEET IS PERMITTED FOR TERMINATIONS AT DEVICES. ROUTE EMT CONDUIT TIGHT TO STRUCTURE.
10. T-TAPS ARE NOT PERMITTED. CONDUIT TERMINATIONS MUST BE ON SCREW TERMINALS OF SYSTEM COMPONENT. WIRE NUTS ARE PROHIBITED.
11. PROVIDE A LABEL FOR EACH WIRE/CIRCUIT (WITHIN ALL PANELS, CABINETS AND JUNCTION BOXES) INDICATING IT'S PURPOSE AND LOCATION. LABELS MUST BE A MINIMUM FONT SIZE OF 1/4" AND ARIAL NARROW. EXAMPLE OF A FIRST FLOOR SIGNALING LINE CIRCUIT ONE OF TWO IS SLC-CIR1-FL1.
12. PROVIDE A LABEL FOR ALL ADDRESSABLE FIRE ALARM DEVICES INDICATING THE DEVICE CIRCUIT AND ADDRESS. LABELS MUST BE A MINIMUM FONT SIZE OF 1/4" AND ARIAL NARROW.
13. PROVIDE 25% ADDITIONAL CIRCUIT CAPACITY FOR STROBES AND SPEAKERS.
14. PANELS MUST BE FACTORY PAINTED RED.
15. SEAL FIRE BARRIER/PARTITIONS AND FIRE RATED FLOOR PENETRATIONS WITH A UL LISTED OR FM APPROVED FIRESTOPPING ASSEMBLY. FIRESTOPPING SYSTEM MUST MATCH THE RATING OF THE PENETRATED WALL/FLOOR.
16. ALL REQUIRED OUTAGES OF THE FIRE ALARM SYSTEM SHALL BE COORDINATED THROUGH THE CONTRACTING OFFICER NOT LESS THAN 15 WORKING DAYS IN ADVANCE. THE GOVERNMENT WILL PROVIDE THE REQUESTED OUTAGE AND ASSOCIATED RESTORATION OF THE FIRE ALARM SYSTEM. THE GOVERNMENT WILL IDENTIFY TO THE CONTRACTOR WHAT CIRCUITS/DEVICES HAVE BEEN TAKEN OUT OF SERVICE ONCE THE OUTAGE HAS BEEN MADE. THIS WORK SHALL BE PERFORMED BY THE CONTRACTOR. OUTAGES DO NOT INCLUDE CONNECTION OF NEW FIRE ALARM DEVICES, AND/OR WIRING TO EXISTING SYSTEMS, OR PROGRAMMING CHANGES NECESSARY TO ACCOMMODATE NEW WORK.
17. AN EXCLUSIVE GOVERNMENT CONTRACTOR/VENDOR RESPONSIBLE FOR MAINTAINING GOVERNMENT FIRE PROTECTION SYSTEMS SHALL BE OBTAINED FOR TIE IN OF NEW WORK AND/OR REPROGRAMMING OF OPERATING, EXISTING FIRE ALARM AND SPRINKLER SYSTEMS, AT CONTRACTORS COST.
18. A FIRE WATCH, AT CONTRACTOR'S COST, WILL BE CONDUCTED CONTINUOUSLY THROUGHOUT THE DURATION OF THE OUTAGE IN ALL AREAS AFFECTED BY THE OUTAGE. FINDINGS/COMMENTS WILL BE DOCUMENTED HOURLY ON FIRE WATCH FORMS PROVIDED BY THE WRNMMC FIRE PREVENTION DIVISION. DOCUMENTATION OF FINDINGS WILL BE MADE AVAILABLE TO THE WRNMMC FIRE DEPARTMENT OFFICIALS UPON THEIR REQUEST. IN THE EVENT OF ANY FIRE/SMOKE EMERGENCIES DISCOVERED DURING THE FIRE WATCH, EMERGENCY NOTIFICATION SHALL BE CONDUCTED IN ACCORDANCE WITH PROCEDURES OUTLINED IN NNMCINST 11320.1F.
19. OUTAGES WILL NOT BE PERMITTED TO TAKE PLACE FOR THE ENTIRE DURATION OF THE PROJECT. OVERNIGHT OUTAGES WILL NOT BE PERMITTED UNLESS WORK IS BEING DONE DURING THAT TIME PERIOD AND THE FIRE ALARM SYSTEM IS PUT BACK INTO SERVICE WITHIN AN HOUR FROM COMPLETION OF WORK. OUTAGES SHALL BE LIMITED TO 8 HOURS.
20. THE FIRE ALARM SYSTEMS IS NOT PERMITTED TO HAVE AN OUTAGE FOR MORE THAN AN HOUR BEFORE STARTING WORK. THE FIRE ALARM SYSTEM SHALL BE RESTORED WITHIN AN HOUR OF COMPLETION OF WORK. THE CONTRACTOR CANNOT LEAVE THE CONSTRUCTION SITE UNPROTECTED.
21. ALL FIRE ALARM AND MASS NOTIFICATION SYSTEMS MUST BE FULLY PRE-TESTED BY THE CONTRACTOR, AND THE CONTRACTOR'S FIRE PROTECTION QUALITY CONTROL SPECIALIST. FINAL ACCEPTANCE TESTING OF LIFE SAFETY SYSTEMS MUST BE PERFORMED WITH THE NAVFAC WASHINGTON FIRE PROTECTION ENGINEER, AND PLACED IN SERVICE PRIOR TO OCCUPANCY. ALL COST AND TIME DELAYS CAUSED BY SYSTEM RETESTING MUST BE THE RESPONSIBILITY OF THE CONTRACTOR.

SYM	DESCRIPTION	DATE	APPR
	FINAL DESIGN SUBMISSION	06/28/2023	

NAVFAC

PROFESSIONAL CERTIFICATION. I CERTIFY THAT THESE DOCUMENTS WERE PREPARED OR APPROVED BY ME AND THAT I AM A DULY LICENSED ENGINEER UNDER THE LAWS OF THE STATE OF MARYLAND, LICENSE NUMBER 41681, EXPIRATION DATE 2/28/2024.

STATE OF MARYLAND — ALAN PETERS — 41681 — PROFESSIONAL ENGINEER — 06/28/2023

SEAL

MTFA architecture
3200 LEE HIGHWAY, ARLINGTON, VA 22207
(703) 524 - 6616 www.mtfa.net

SUMMER CONSULTANTS INCORPORATED
7900 Westpark Dr. | Suite A405 | McLean, VA 22102
(703) 556-8820 | www.summerconsultants.com
A/E INFO

APPROVED

FOR COMMANDER NAVFAC

ACTIVITY: FINAL DESIGN SUBMISSION

SATISFACTORY TO DATE

DES	DRW	CHK
EA	JL	AP

PM/DM

BRANCH MANAGER

CHIEF ENG/ARCH

FIRE PROTECTION

DEPARTMENT OF THE NAVY
NAVAL FACILITIES ENGINEERING SYSTEMS COMMAND ~ WASHINGTON
PUBLIC WORKS DEPARTMENT BETHESDA
NAVAL FACILITIES ENGINEERING SYSTEMS COMMAND
NAVAL SUPPORT ACTIVITY BETHESDA, MARYLAND
BETHESDA, MD
UNIFORMED SERVICES UNIVERSITY OF THE HEALTH SCIENCES
Building 76E Roof Garden
SYMBOLS AND ABBREVIATIONS

SCALE: AS NOTED

EPROJECT NO.: 1698751

CONSTR. CONTR. NO.

NAVFAC DRAWING NO. 13148396

SHEET 39 OF 49

FA001

DRAWFORM REVISION: 25 AUGUST 2020

FILE NAME: 171.43 FA001.DWG
OUR REF: 171.43
PLOT DATE: 6/20/2023 11:10:54 AM

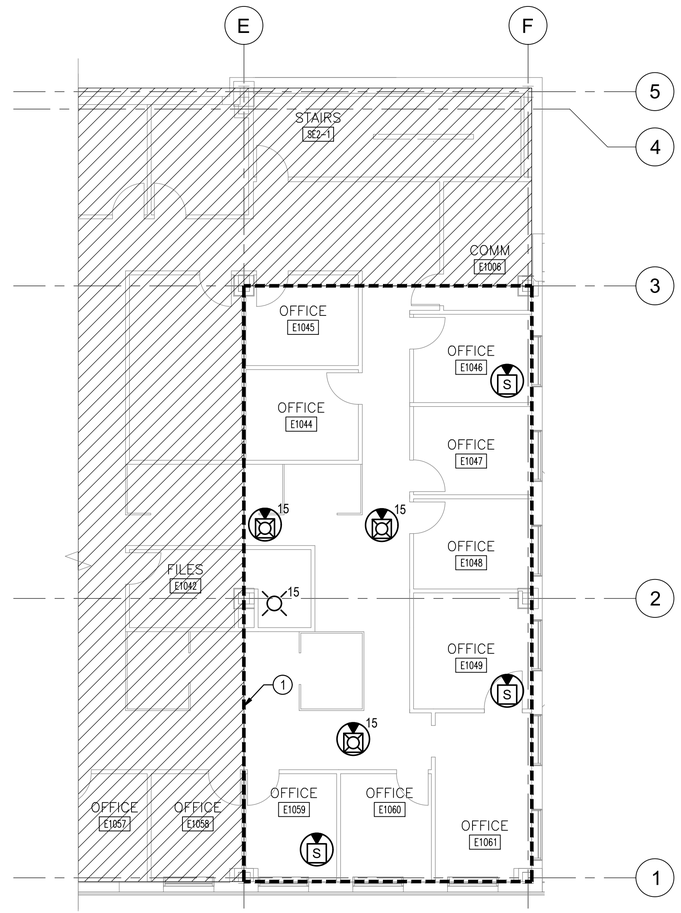

1 FIRST FLOOR DEMOLITION

1/8"=1'-0"

0 8' 16'

N

GENERAL NOTES

G1. VERIFY LOCATION AND DIMENSIONS OF EXISTING EQUIPMENT AND COORDINATE ALL WORK PRIOR TO THE START OF CONSTRUCTION.

G3. COORDINATE WORK WITH PHASING PLAN G-003. WORK ON FIRST FLOOR NORTH OF COLUMN LINE 2 SHALL OCCUR DURING PHASE 1. WORK ON FIRST FLOOR SOUTH OF COLUMN LINE 2 SHALL OCCUR DURING PHASE 2. WORK ON ROOF AND ON SECOND FLOOR SHALL OCCUR DURING PHASE 3.

NOTES

1. CAREFULLY DISCONNECT AND REMOVE CEILING MOUNTED FIRE ALARM DEVICES. STORE FOR REINSTALLATION. PROVIDE TERMINAL STRIPS TO MAINTAIN CIRCUIT CONTINUITY.

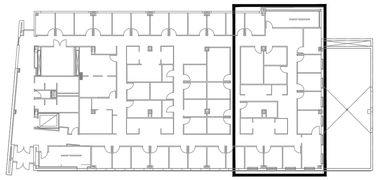

K KEY PLAN

NOT TO SCALE

N

SYM	DESCRIPTION	DATE	APPR
	FINAL DESIGN SUBMISSION	06/28/2023	

PROFESSIONAL CERTIFICATION. I CERTIFY THAT THESE DOCUMENTS WERE PREPARED OR APPROVED BY ME AND THAT I AM A DULY LICENSED ENGINEER UNDER THE LAWS OF THE STATE OF MARYLAND, LICENSE NUMBER 41681, EXPIRATION DATE 2/28/2024.

06/28/2023

SEAL

MTFA architecture

3200 LEE HIGHWAY, ARLINGTON, VA 22207
(703) 524 - 6616 www.mtfa.net

SUMMER CONSULTANTS INCORPORATED

7900 Westpark Dr. | Suite A405 | McLean, VA 22102
(703) 556-8820 | www.summerconsultants.com
A/E INFO

APPROVED

FOR COMMANDER NAVFAC

ACTIVITY

FINAL DESIGN SUBMISSION

SATISFACTORY TO DATE

DES EA DRW EA CHK AP

PM/DM

BRANCH MANAGER

CHIEF ENG/ARCH

FIRE PROTECTION

DEPARTMENT OF THE NAVY
NAVAL FACILITIES ENGINEERING SYSTEMS COMMAND
PUBLIC WORKS DEPARTMENT BETHESDA

NAVAL FACILITIES ENGINEERING SYSTEMS COMMAND ~ WASHINGTON
NAVAL SUPPORT ACTIVITY BETHESDA, MARYLAND

UNIFORMED SERVICES UNIVERSITY OF THE HEALTH SCIENCES

BETHESDA, MD

Building 76E Roof Garden

FIRST FLOOR - DEMOLITION

SCALE: AS NOTED

EPROJECT NO.: 1698751

CONSTR. CONTR. NO.

NAVFAC DRAWING NO.
13148397

SHEET 40 OF 49

FD111

DRAWFORM REVISION: 25 AUGUST 2020

FILE NAME: 171.43 FD111.DWG
OUR REF: 171.43
PLOT DATE: 6/20/2023 11:11:00 AM

GENERAL NOTES

G1. VERIFY LOCATION AND DIMENSIONS OF EXISTING EQUIPMENT AND COORDINATE ALL WORK PRIOR TO THE START OF CONSTRUCTION.

G3. COORDINATE WORK WITH PHASING PLAN G-003. WORK ON FIRST FLOOR NORTH OF COLUMN LINE 2 SHALL OCCUR DURING PHASE 1. WORK ON FIRST FLOOR SOUTH OF COLUMN LINE 2 SHALL OCCUR DURING PHASE 2. WORK ON ROOF AND ON SECOND FLOOR SHALL OCCUR DURING PHASE 3.

NOTES

1. PROTECT EXISTING TO REMAIN DEVICE DURING DEMOLITION AND CONSTRUCTION.

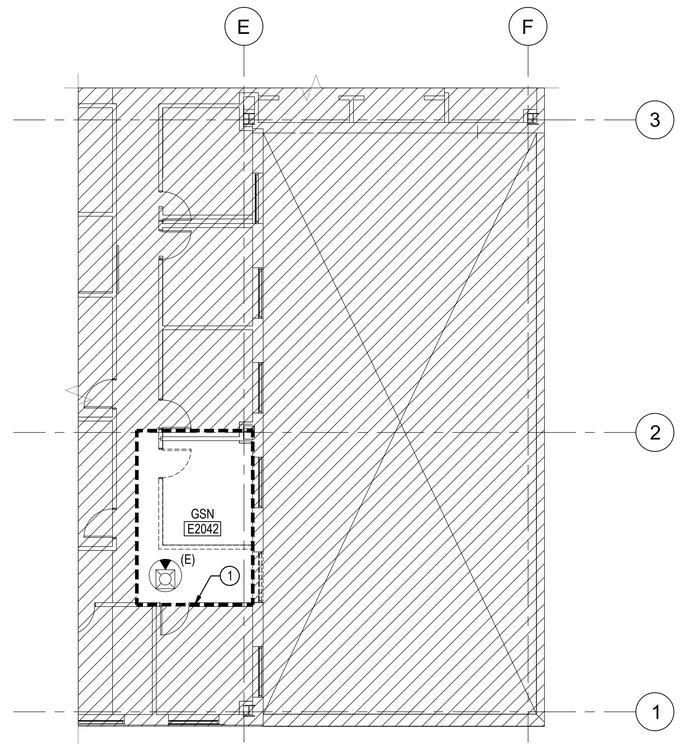

1 SECOND FLOOR DEMOLITION

1/8"=1'-0"
0 8' 16'

N

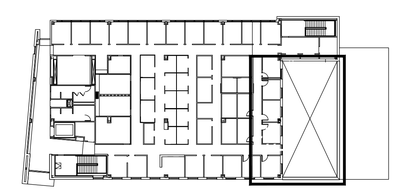

K KEY PLAN
NOT TO SCALE

N

SYM	DESCRIPTION	DATE	APPR
	FINAL DESIGN SUBMISSION	06/28/2023	

PROFESSIONAL CERTIFICATION. I CERTIFY THAT THESE DOCUMENTS WERE PREPARED OR APPROVED BY ME AND THAT I AM A DULY LICENSED ENGINEER UNDER THE LAWS OF THE STATE OF MARYLAND, LICENSE NUMBER 41681, EXPIRATION DATE 2/28/2024.

STATE OF MARYLAND ALAN PATERSON No. 41681 PROFESSIONAL ENGINEER

SEAL

MTFA architecture
3200 LEE HIGHWAY, ARLINGTON, VA 22207
(703) 524 - 6616 www.mtfa.net

SUMMER CONSULTANTS INCORPORATED
7900 Westpark Dr. | Suite A405 | McLean, VA 22102
(703) 556-8820 | www.summerconsultants.com
A/E INFO

APPROVED

FOR COMMANDER NAVFAC

ACTIVITY
FINAL DESIGN SUBMISSION

SATISFACTORY TO DATE

DES	EA	DRW	JL	CHK	AP

PM/DM

BRANCH MANAGER

CHIEF ENG/ARCH

FIRE PROTECTION

DEPARTMENT OF THE NAVY
NAVAL FACILITIES ENGINEERING SYSTEMS COMMAND
NAVAL FACILITIES ENGINEERING SYSTEMS COMMAND – WASHINGTON
PUBLIC WORKS DEPARTMENT, BETHESDA
NAVAL SUPPORT ACTIVITY BETHESDA, MARYLAND
UNIFORMED SERVICES UNIVERSITY OF THE HEALTH SCIENCES
BETHESDA, MD

Building 76E Roof Garden

SECOND FLOOR

SCALE: AS NOTED

EPROJECT NO.: 1698751

CONSTR. CONTR. NO.

NAVFAC DRAWING NO.
13148398

SHEET 41 OF 49

FD112

DRAWFORM REVISION: 25 AUGUST 2020

FILE NAME: 171.43 FD112.DWG
OUR REF: 171.43
PLOT DATE: 6/20/2023 11:11:06 AM

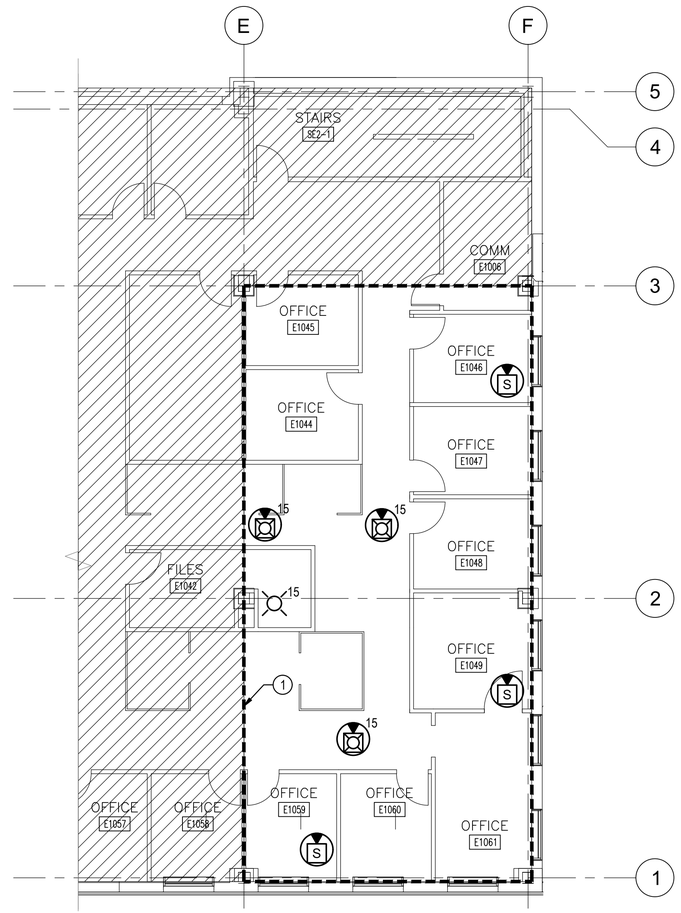

1 FIRST FLOOR
1/8"=1'-0"
0 8' 16'
N

GENERAL NOTES

G1. ALL WORK SHALL BE NEW AND PROVIDED UNDER THIS CONTRACT UNLESS SPECIFICALLY MARKED EXISTING, EXIST., OR (E).

G2. VERIFY LOCATION AND DIMENSIONS OF EXISTING EQUIPMENT AND COORDINATE ALL WORK PRIOR TO THE START OF CONSTRUCTION.

G3. COORDINATE WORK WITH PHASING PLAN G-003. WORK ON FIRST FLOOR NORTH OF COLUMN LINE 2 SHALL OCCUR DURING PHASE 1. WORK ON FIRST FLOOR SOUTH OF COLUMN LINE 2 SHALL OCCUR DURING PHASE 2. WORK ON ROOF AND ON SECOND FLOOR SHALL OCCUR DURING PHASE 3.

NOTES

1. REINSTALL CEILING MOUNTED FIRE ALARM DEVICES.PROVIDE CONDUIT AND CONDUCTORS AND EXTEND TO EXISTING FIRE ALARM CIRCUITS. FIRE ALARM DEVICES MUST BE FULLY TESTED AN REINSPECTED WITH NAVFAC FIRE PROTECTION, ONCE THEY HAVE BEEN REINSTALLED AT THE COMPLETION OF WORK.

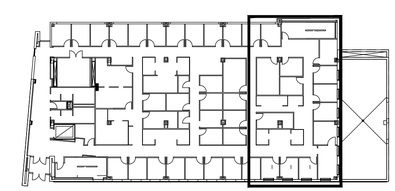

K KEY PLAN
NOT TO SCALE
N

SYM	DESCRIPTION	DATE	APPR
	FINAL DESIGN SUBMISSION	06/28/2023	

NAVFAC

PROFESSIONAL CERTIFICATION. I CERTIFY THAT THESE DOCUMENTS WERE PREPARED OR APPROVED BY ME AND THAT I AM A DULY LICENSED ENGINEER UNDER THE LAWS OF THE STATE OF MARYLAND, LICENSE NUMBER 41681, EXPIRATION DATE 2/28/2024.

06/28/2023
SEAL

MTFA architecture
3200 LEE HIGHWAY, ARLINGTON, VA 22207
(703) 524 - 6616 www.mtfa.net

SUMMER CONSULTANTS INCORPORATED
7900 Westpark Dr. | Suite A405 | McLean, VA 22102
(703) 556-8820 | www.summerconsultants.com
A/E INFO

APPROVED
FOR COMMANDER NAVFAC
ACTIVITY
FINAL DESIGN SUBMISSION
SATISFACTORY TO DATE
DES EA DRW EA CHK AP
PM/DM
BRANCH MANAGER
CHIEF ENG/ARCH
FIRE PROTECTION

DEPARTMENT OF THE NAVY
NAVAL FACILITIES ENGINEERING SYSTEMS COMMAND ~ WASHINGTON
PUBLIC WORKS DEPARTMENT BETHESDA
NAVAL FACILITIES ENGINEERING SYSTEMS COMMAND
NAVAL SUPPORT ACTIVITY BETHESDA, MARYLAND
UNIFORMED SERVICES UNIVERSITY OF THE HEALTH SCIENCES
BETHESDA, MD
Building 76E Roof Garden
FIRST FLOOR

SCALE: AS NOTED
EPROJECT NO.: 1698751
CONSTR. CONTR. NO.
NAVFAC DRAWING NO. 13148399
SHEET 42 OF 49
FA101

DRAWFORM REVISION: 25 AUGUST 2020

FILE NAME: 171.43 FA101.DWG
OUR REF: 171.43
PLOT DATE: 6/20/2023 11:11:12 AM

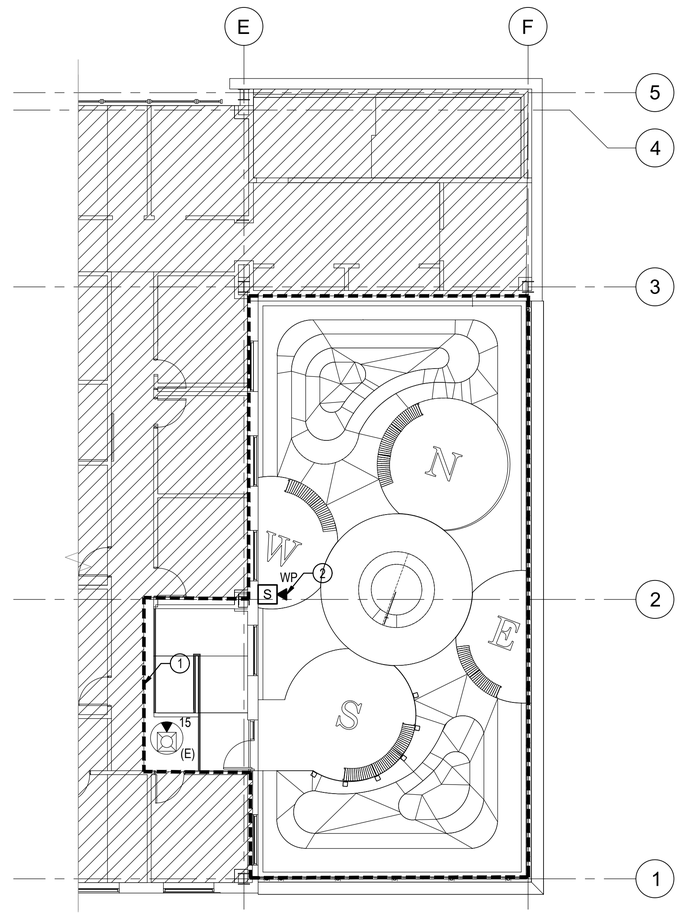

1 SECOND FLOOR
1/8"=1'-0"
0 8' 16'
N

GENERAL NOTES

G1. ALL WORK SHALL BE NEW AND PROVIDED UNDER THIS CONTRACT UNLESS SPECIFICALLY MARKED EXISTING, EXIST., OR (E).

G2. VERIFY LOCATION AND DIMENSIONS OF EXISTING EQUIPMENT AND COORDINATE ALL WORK PRIOR TO THE START OF CONSTRUCTION.

G3. COORDINATE WORK WITH PHASING PLAN G-003. WORK ON FIRST FLOOR NORTH OF COLUMN LINE 2 SHALL OCCUR DURING PHASE 1. WORK ON FIRST FLOOR SOUTH OF COLUMN LINE 2 SHALL OCCUR DURING PHASE 2. WORK ON ROOF AND ON SECOND FLOOR SHALL OCCUR DURING PHASE 3.

NOTES

1. PROVIDE NOTIFICATION IN ACCORDANCE WITH NFPA 72 AND UFC 4-021-01 IN AREA OF WORK.

2. PROVIDE SURGE SUPPRESSION FOR NOTIFICATION APPLIANCE CIRCUIT THAT LEAVES THE FACILITY'S EXTERIOR ENCLOSURE.

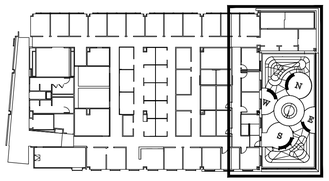

K KEY PLAN
NOT TO SCALE
N

SYM	DESCRIPTION	DATE	APPR
	FINAL DESIGN SUBMISSION	06/28/2023	

PROFESSIONAL CERTIFICATION. I CERTIFY THAT THESE DOCUMENTS WERE PREPARED OR APPROVED BY ME AND THAT I AM A DULY LICENSED ENGINEER UNDER THE LAWS OF THE STATE OF MARYLAND, LICENSE NUMBER 41681, EXPIRATION DATE 2/28/2024.

STATE OF MARYLAND · ADAM PARKER · No. 41681 · PROFESSIONAL ENGINEER

SEAL

MTFA architecture
3200 LEE HIGHWAY, ARLINGTON, VA 22207
(703) 524 - 6616 www.mtfa.net

SUMMER CONSULTANTS INCORPORATED
7900 Westpark Dr. | Suite A405 | McLean, VA 22102
(703) 556-8820 | www.summerconsultants.com
A/E INFO

APPROVED

FOR COMMANDER NAVFAC

ACTIVITY
FINAL DESIGN SUBMISSION

SATISFACTORY TO DATE

DES	EA	DRW	JL	CHK	AP

PM/DM

BRANCH MANAGER

CHIEF ENG/ARCH

FIRE PROTECTION

DEPARTMENT OF THE NAVY
NAVAL FACILITIES ENGINEERING SYSTEMS COMMAND ~ WASHINGTON
PUBLIC WORKS DEPARTMENT, BETHESDA
NAVAL FACILITIES ENGINEERING SYSTEMS COMMAND
NAVAL SUPPORT ACTIVITY BETHESDA, MARYLAND
UNIFORMED SERVICES UNIVERSITY OF THE HEALTH SCIENCES
BETHESDA, MD
Building 76E Roof Garden
SECOND FLOOR

SCALE: AS NOTED
EPROJECT NO.: 1698751
CONSTR. CONTR. NO.
NAVFAC DRAWING NO. 13148400
SHEET 43 OF 49
FA102

DRAWFORM REVISION: 25 AUGUST 2020

FILE NAME: 171.43 FA102.DWG
OUR REF: 171.43
PLOT DATE: 6/20/2023 11:11:18 AM

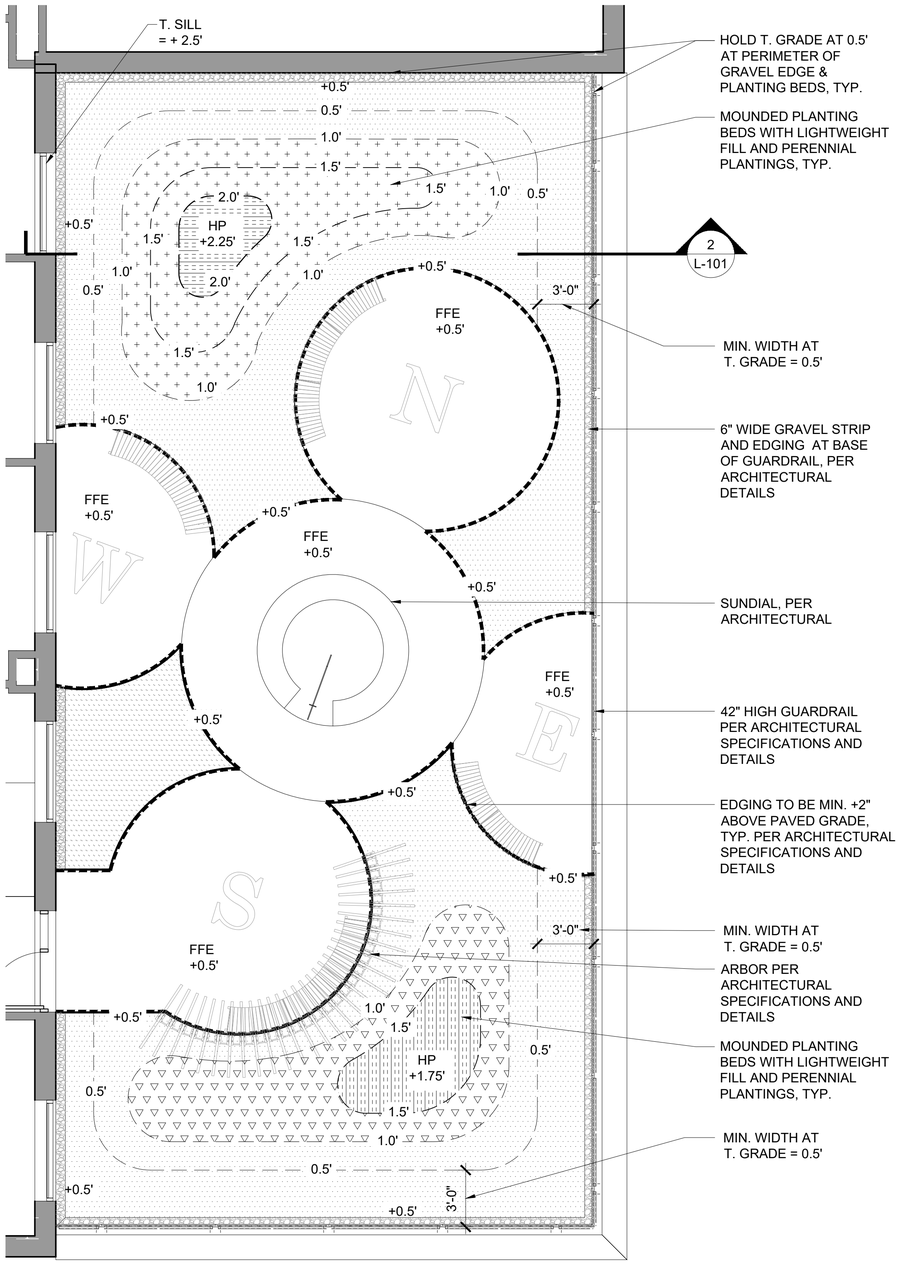

NOTE:
TOP OF GREEN ROOF ASSEMBLY IS THE REFERENCE DATUM ASSUMED AS 0'-0" FOR ALL GRADES INDICATED, TYP.

1 SOIL & GRADING PLAN

1/4" = 1'-0"

0 2' 4' 8' 12'

SOILS AND LIGHTWEIGHT FILL LEGEND (LEGEND REFERS TO PLAN VIEW ONLY)

- 6"-12" DEEP SOIL NO LIGHTWEIGHT FILL
- 12" DEEP SOIL OVER 0 -12" THICK TAPERED / TIERED LIGHTWEIGHT FILL
- 12" DEEP SOIL OVER 0 - 6" THICK TAPERED / TIERED LIGHTWEIGHT FILL
- 12" DEEP SOIL 12"-15" THICK TAPERED / TIERED LIGHTWEIGHT FILL
- 12" DEEP SOIL OVER 6" - 9" THICK TAPERED / TIERED LIGHTWEIGHT FILL

ABBREVIATIONS LEGEND

T. SILL	TOP OF SILL
FFE	FINISHED FLOOR ELEVATION
HP	HIGH POINT
T. GRADE	TOP OF GRADE

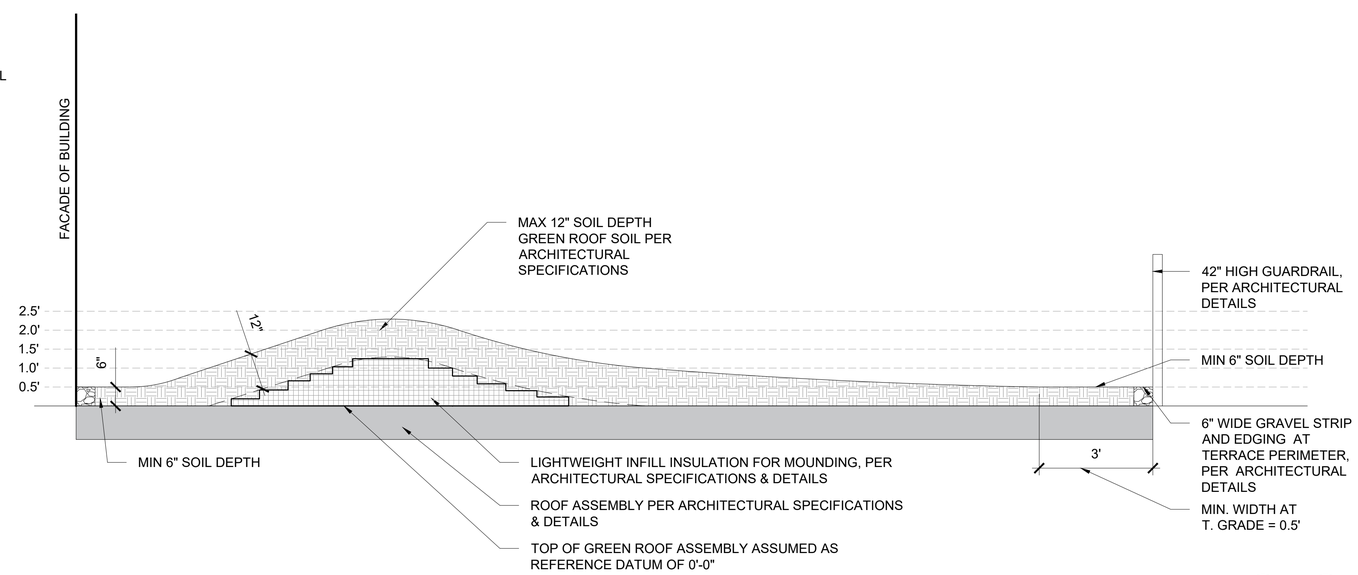

2 SECTION THROUGH MOUNDED PLANTING

1/2" = 1'-0"

0 1' 2' 4' 6'

PLAN NORTH

TRUE NORTH

SYM	DESCRIPTION	DATE	APPR
	Final Design Submission	06/28/2023	

PROFESSIONAL CERTIFICATION. I CERTIFY THAT THESE DOCUMENTS WERE PREPARED OR APPROVED BY ME AND THAT I AM A DULY LICENSED LANDSCAPE ARCHITECT UNDER THE LAWS OF THE STATE OF MARYLAND, LICENSE NUMBER 719, EXPIRATION DATE NOVEMBER 2023.

STATE OF MARYLAND · ERIC DAVID BRODT · #719 · REGISTERED LANDSCAPE ARCHITECT

SEAL

MTFA architecture
3200 LANGSTON BOULEVARD, ARLINGTON, VA 22207
(703) 524 - 8516 www.mtfa.net

A/E INFO

APPROVED

FOR COMMANDER NAVFAC

ACTIVITY
FINAL DESIGN SUBMISSION

SATISFACTORY TO DATE

DES AS | DRW MD | CHK JW

PM/DM

BRANCH MANAGER

CHIEF ENG/ARCH

FIRE PROTECTION

DEPARTMENT OF THE NAVY
NAVAL FACILITIES ENGINEERING SYSTEMS COMMAND ~ WASHINGTON
PUBLIC WORKS DEPARTMENT, BETHESDA
NAVAL FACILITIES ENGINEERING SYSTEMS COMMAND
NAVAL SUPPORT ACTIVITY BETHESDA, MARYLAND
BETHESDA, MD
UNIFORMED SERVICES UNIVERSITY OF THE HEALTH SCIENCES
Building 76E Roof Garden
SOILS & GRADING

SCALE: AS NOTED

EPROJECT NO.: 1698751

CONSTR. CONTR. NO.

NAVFAC DRAWING NO.
13148401

SHEET 44 OF 49

L-101

DRAWFORM REVISION: 25 AUGUST 2020

G-004 100% Pre-Final Design Submission 03/10/2023
2/24/2023 10:01:56 AM

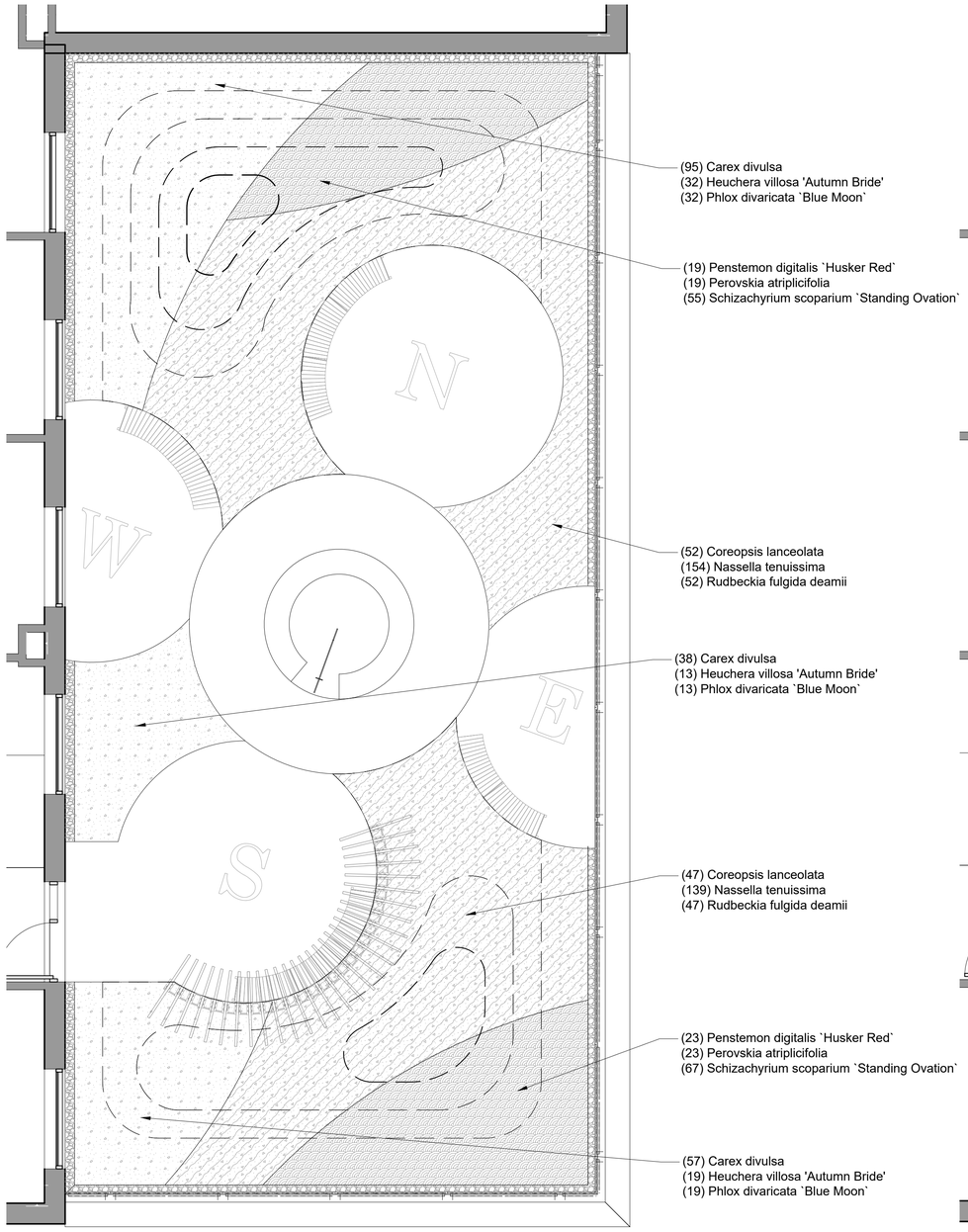

1 PERENNIAL PLANTING PLAN
1/4" = 1'-0"

0 2' 4' 8' 12'

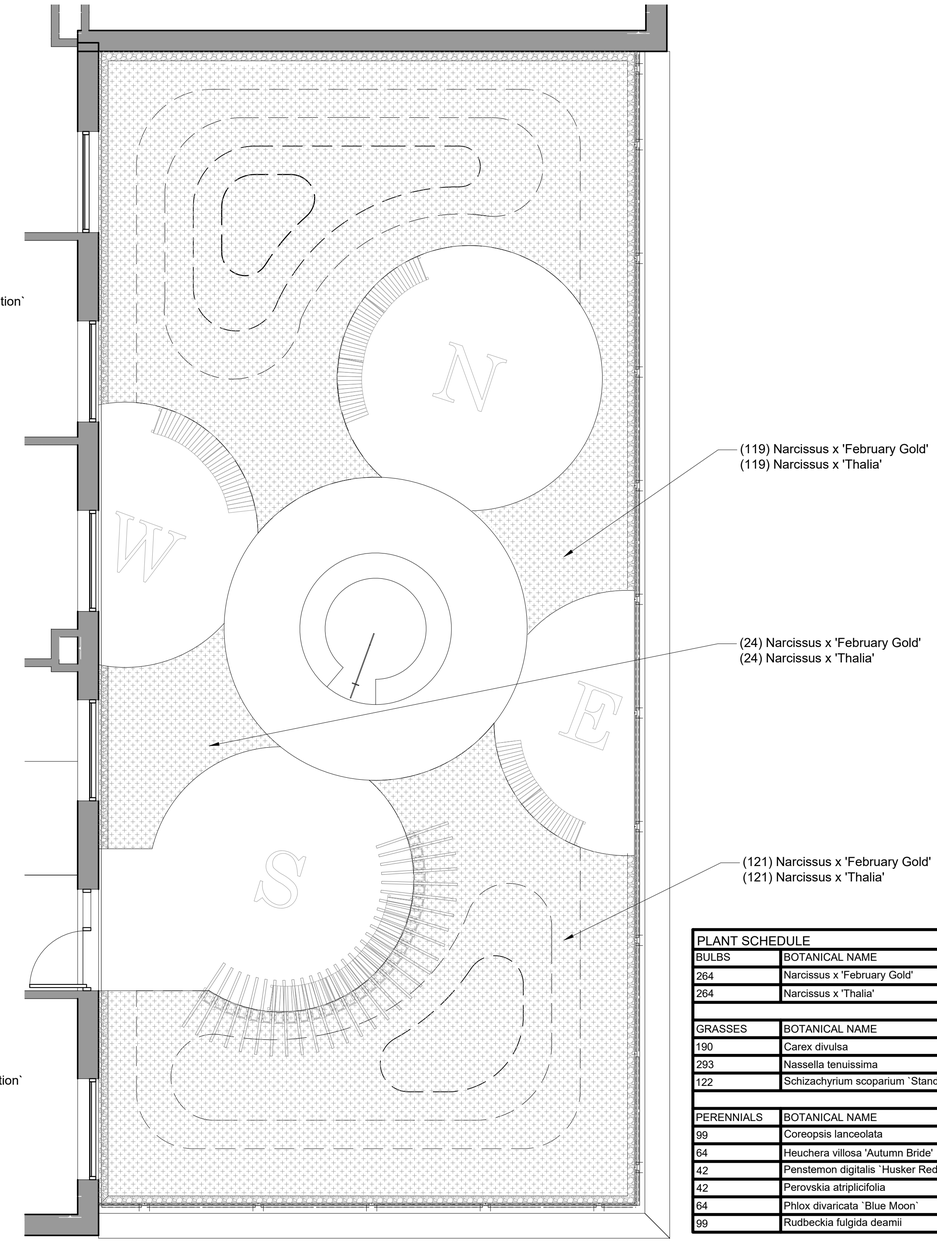

2 BULB PLANTING PLAN
1/4" = 1'-0"

0 2' 4' 8' 12'

PLANT SCHEDULE				
BULBS	BOTANICAL NAME	COMMON NAME	SIZE	SPACING
264	Narcissus x 'February Gold'	February Gold Daffodil	Bulb	12" o.c.
264	Narcissus x 'Thalia'	Thalia Daffodil	Bulb	12" o.c.
GRASSES	BOTANICAL NAME	COMMON NAME	SIZE	SPACING
190	Carex divulsa	European Grey Sedge	1 qt.	12" o.c.
293	Nassella tenuissima	Mexican Feather Grass	1 qt.	12" o.c.
122	Schizachyrium scoparium `Standing Ovation`	Standing Ovation Little Bluestem	1 qt.	12" o.c.
PERENNIALS	BOTANICAL NAME	COMMON NAME	SIZE	SPACING
99	Coreopsis lanceolata	Lanceleaf Tickseed	1 qt.	12" o.c.
64	Heuchera villosa 'Autumn Bride'	Autumn Bride Hairy Alumroot	1 qt.	12" o.c.
42	Penstemon digitalis `Husker Red`	Husker Red Beardtongue	1 qt.	12" o.c.
42	Perovskia atriplicifolia	Russian Sage	1 qt.	12" o.c.
64	Phlox divaricata `Blue Moon`	Blue Moon Woodland Phlox	1 qt.	12" o.c.
99	Rudbeckia fulgida deamii	Deam`s Coneflower	1 qt.	12" o.c.

PLAN NORTH
TRUE NORTH

SYM	DESCRIPTION	DATE	APPR
	Final Design Submission	06/28/2023	

NAVFAC

PROFESSIONAL CERTIFICATION. I CERTIFY THAT THESE DOCUMENTS WERE PREPARED OR APPROVED BY ME AND THAT I AM A DULY LICENSED LANDSCAPE ARCHITECT UNDER THE LAWS OF THE STATE OF MARYLAND, LICENSE NUMBER 719, EXPIRATION DATE NOVEMBER 2023.

STATE OF MARYLAND ERIC DAVID GROFF 719 LICENSED LANDSCAPE ARCHITECT

SEAL

MTFA architecture
3200 LANGSTON BOULEVARD, ARLINGTON, VA 22207
(703) 524 - 8016 www.mtfa.net

A/E INFO

APPROVED

FOR COMMANDER NAVFAC

ACTIVITY
FINAL DESIGN SUBMISSION

SATISFACTORY TO DATE

DES AS DRW MD CHK JW

PM/DM

BRANCH MANAGER

CHIEF ENG/ARCH

FIRE PROTECTION

DEPARTMENT OF THE NAVY
NAVAL FACILITIES ENGINEERING SYSTEMS COMMAND
PUBLIC WORKS DEPARTMENT, BETHESDA
NAVAL FACILITIES ENGINEERING SYSTEMS COMMAND ~ WASHINGTON
NAVAL SUPPORT ACTIVITY BETHESDA, MARYLAND
BETHESDA, MD
UNIFORMED SERVICES UNIVERSITY OF THE HEALTH SCIENCES
Building 76E Roof Garden
PLANTING PLAN

SCALE: AS NOTED
EPROJECT NO.: 1698751
CONSTR. CONTR. NO.
NAVFAC DRAWING NO.
13148402
SHEET 45 OF 49
L-102

DRAWFORM REVISION: 25 AUGUST 2020

G-004 100% Pre-Final Design Submission 03/10/2023
2/24/2023 10:01:56 AM

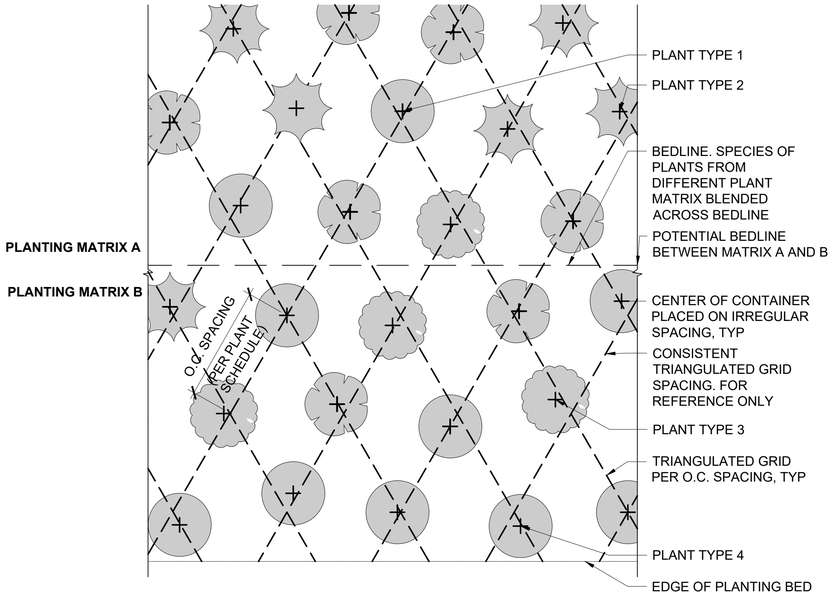

NOTES:
1. PLANTS SHALL NOT BE PLACED IN STRAIGHT LINES.
2. PLANTS SHALL BE SPACED IRREGULARLY; ON-CENTER (O.C.) SPACING;
3. SPACING SHALL BE AN AVERAGE, RATHER THAN A CONSTANT, DIMENSION.
4. PERENNIAL AND GRASS SPECIES SHALL BE PLACED IN GROUPINGS OF 3-5 MIN.

1 PLANTING LAYOUT & TRIANGULATION
1" = 1'-0"

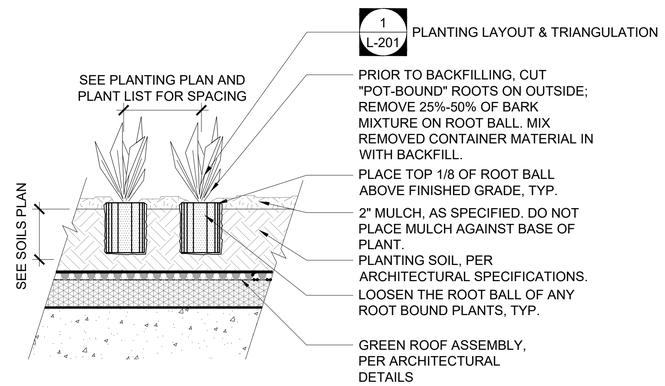

NOTES:
1. PLANTS SHALL NOT BE PLACED IN STRAIGHT LINES.
2. PLANTS SHALL BE SPACED IRREGULARLY; ON-CENTER (O.C.) SPACING;
3. SHALL BE AN AVERAGE, RATHER THAN A CONSTANT, DIMENSION.

2 PERENNIAL & GRASS PLANTING ON STRUCTURE
1" = 1'-0"

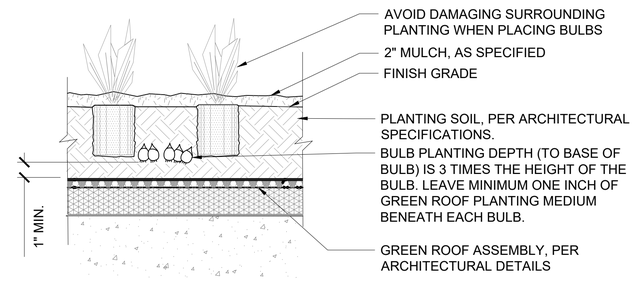

NOTE:
1. SEE PLANT SCHEDULE FOR SPACING, PLANTING DEPTH AND QUANTITY OF BULBS PER SQUARE FOOT.
2. BULBS SHOULD ONLY BE PLANTED DURING THE FALL SEASON.
3. REFER TO DETAIL 1 FOR BULB LAYOUT AND TRIANGULATION.

3 BULB PLANTING ON STRUCTURE
1" = 1'-0"

SYM	DESCRIPTION	DATE	APPR
	Final Design Submission	06/28/2023	

NAVFAC

PROFESSIONAL CERTIFICATION. I CERTIFY THAT THESE DOCUMENTS WERE PREPARED OR APPROVED BY ME AND THAT I AM A DULY LICENSED LANDSCAPE ARCHITECT UNDER THE LAWS OF THE STATE OF MARYLAND, LICENSE NUMBER 719, EXPIRATION DATE NOVEMBER 2023.

STATE OF MARYLAND · ERIC DAVID GRATT · #719 · REGISTERED LANDSCAPE ARCHITECT

SEAL

MTFA architecture
3200 LANGSTON BOULEVARD, ARLINGTON, VA 22207
(703) 524 - 6016 www.mtfa.net

A/E INFO

APPROVED

FOR COMMANDER NAVFAC

ACTIVITY
FINAL DESIGN SUBMISSION

SATISFACTORY TO DATE

DES AS | DRW MD | CHK JW

PM/DM

BRANCH MANAGER

CHIEF ENG/ARCH

FIRE PROTECTION

DEPARTMENT OF THE NAVY
NAVAL FACILITIES ENGINEERING SYSTEMS COMMAND
PUBLIC WORKS DEPARTMENT, BETHESDA
NAVAL FACILITIES ENGINEERING SYSTEMS COMMAND – WASHINGTON
NAVAL SUPPORT ACTIVITY BETHESDA, MARYLAND
UNIFORMED SERVICES UNIVERSITY OF THE HEALTH SCIENCES
BETHESDA, MD
Building 76E Roof Garden
PLANTING DETAILS

SCALE: AS NOTED

EPROJECT NO.: 1698751

CONSTR. CONTR. NO.

NAVFAC DRAWING NO.
13148403

SHEET 46 OF 49

L-201

DRAWFORM REVISION: 25 AUGUST 2020

G-004 100% Pre-Final Design Submission 03/10/2023
2/24/2023 10:01:56 AM

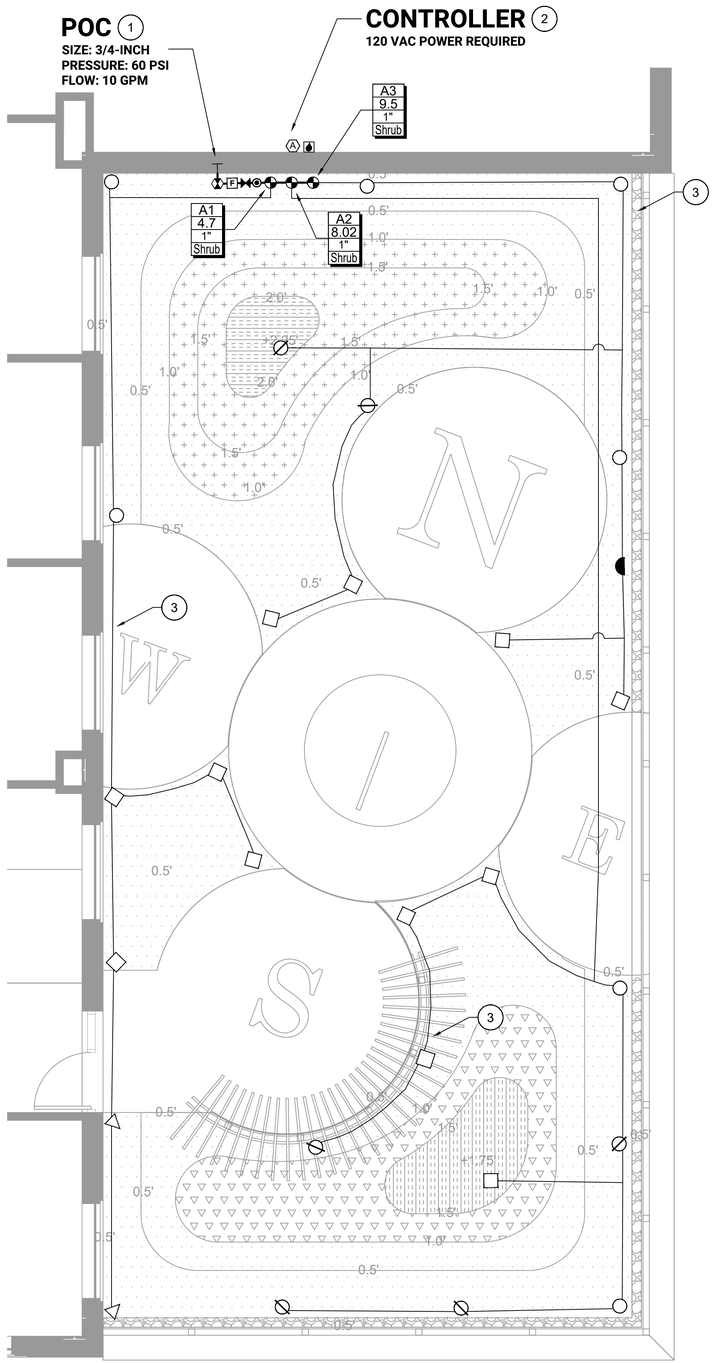

IRRIGATION LEGEND

- POINT-OF-CONNECTION ASSEMBLY
- MAINLINE PIPE: **CLASS 200 PVC**
  1-INCH SIZE UNLESS OTHERWISE INDICATED
- LATERAL PIPE TO SPRINKLERS: **CLASS 200 PVC**
  1-INCH SIZE UNLESS OTHERWISE INDICATED
- UNCONNECTED PIPE CROSSING
- REMOTE CONTROL VALVE ASSEMBLY FOR SPRINKLER LATERALS:
  RAIN BIRD PEB (SIZED PER PLAN)
- QUICK COUPLING VALVE ASSEMBLY: **RAIN BIRD 5RC**
- ISOLATION GATE VALVE ASSEMBLY: **MATCO 514**
- F FLOW SENSOR ASSEMBLY: **RAIN BIRD UFS100**
- MASTER VALVE ASSEMBLY: **RAIN BIRD PEB (1")**

A1 / 14 / 1" / Turf
- INDICATES CONTROLLER AND STATION NUMBER
- INDICATES LATERAL DISCHARGE (GPM)
- INDICATES VALVE SIZE (INCHES)
- INDICATES LANDSCAPE APPLICATION

- A IRRIGATION CONTROLLER UNIT
  WITH **WR2-RFC**
  RAIN BIRD ESP-TM2-4
- WEATHER SENSOR: **WRS-RFC**
- POP-UP SPRAY SPRINKLER: **RAIN BIRD RD1804-S-P30 W/MPR SERIES NOZZLE**
  PRESSURE: **30 PSI** RADIUS: **VARIES**
  FLOW (GPM): **HEVAN08-1.17 HEVAN10-1.78 HEVAN12-2.37 HEVAN15-3.70**
- POP-UP SPRAY SPRINKLER: **RAIN BIRD RD1804-S-P30 W/MPR SERIES NOZZLE**
  PRESSURE: **30 PSI** RADIUS: **4 FEET X 15 FEET**
  FLOW (GPM): **EST-0.61 SST-1.21**

CONSTRUCTION NOTES

1. **THE IRRIGATION SYSTEM POINT-OF-CONNECTION (POC) SHALL BE DOWNSTREAM OF THE IRRIGATION WATER TAP AND METER INSTALLED BY OTHERS AT THE APPROXIMATE LOCATION SHOWN. INSTALL BACKFLOW PREVENTION UNIT AND MASTER VALVE ASSEMBLY AS INDICATED. VERIFY EXACT LOCATION OF POC WITH MEP.**
2. **WALL MOUNT THE IRRIGATION CONTROLLER AT THE APPROXIMATE LOCATION SHOWN. COORDINATE ELECTRICAL POWER TO THE CONTROLLER WITH THE OWNER'S REPRESENTATIVE. CARE SHOULD BE TAKEN TO INSTALL THE IRRIGATION CONTROLLER IN A LOCATION THAT IS ACCESSIBLE FOR MAINTENANCE, AND SCREENED FROM VIEW EITHER BEHIND ENTRY WALLS, NEXT TO BUILDINGS, OR BEHIND PLANT MATERIAL. FINAL LOCATION TO BE APPROVED BY OWNER'S REPRESENTATIVE.**
3. **IRRIGATION CONTRACTOR TO SET HEADS AND IRRIGATION EQUIPMENT 12" FROM PERGOLA POSTS AND STRUCTURES.**

INSTALLATION GENERAL NOTES

1. **THE SYSTEM DESIGN ASSUMES A MINIMUM DYNAMIC PRESSURE FOR THE IRRIGATION SYSTEM OF 60 PSI (PER CITY ENGINEER), AT A DESIGN FLOW OF 10 GPM AT THE 3/4-INCH IRRIGATION POINT-OF-CONNECTION (POC). BACKFLOW PREVENTER LOCATED IN MECHANICAL ROOM ON FIRST FLOOR; MEP TO PROVIDE A ¾" STUB UP TO ROOF. VERIFY PRESSURE AND FLOW ON SITE PRIOR TO CONSTRUCTION.**
2. **READ THOROUGHLY AND BECOME FAMILIAR WITH THE SPECIFICATIONS AND INSTALLATION DETAILS FOR THIS AND RELATED WORK PRIOR TO CONSTRUCTION.**
3. **COORDINATE UTILITY LOCATES ("CALL BEFORE YOU DIG") OF UNDERGROUND UTILITIES PRIOR TO CONSTRUCTION.**
4. **DO NOT PROCEED WITH THE INSTALLATION OF THE IRRIGATION SYSTEM WHEN IT IS OBVIOUS IN THE FIELD THAT OBSTRUCTIONS OR GRADE DIFFERENCES EXIST THAT MIGHT NOT HAVE BEEN CONSIDERED IN THE ENGINEERING. IF DISCREPANCIES IN CONSTRUCTION DETAILS, LEGEND, NOTES, OR SPECIFICATIONS ARE DISCOVERED, BRING ALL SUCH OBSTRUCTIONS OR DISCREPANCIES TO THE ATTENTION OF THE OWNER'S REPRESENTATIVE.**
5. **THE DRAWINGS ARE DIAGRAMMATIC. THEREFORE, THE FOLLOWING SHOULD BE NOTED:**
   - A. **ALTHOUGH IRRIGATION COMPONENTS MAY BE SHOWN OUTSIDE PLANTING AREAS FOR CLARITY, INSTALL IRRIGATION PIPE AND WIRING IN LANDSCAPED AREAS WHENEVER POSSIBLE.**
   - B. **TREE AND SHRUB LOCATIONS AS SHOWN ON LANDSCAPE PLANS TAKE PRECEDENCE OVER IRRIGATION EQUIPMENT LOCATIONS. AVOID CONFLICTS BETWEEN THE IRRIGATION SYSTEM, PLANTING MATERIALS, AND ARCHITECTURAL FEATURES.**
   - C. **USE ONLY STANDARD TEES AND ELBOW FITTINGS. USE OF TEES IN THE BULLNOSE CONFIGURATION, OR USE OF CROSS TYPE FITTINGS IS NOT ALLOWED.**
6. **PROVIDE THE FOLLOWING COMPONENTS TO THE OWNER PRIOR TO THE COMPLETION OF THE PROJECT:**
   - A. **TWO (2) OPERATING KEYS FOR EACH TYPE OF MANUALLY OPERATED VALVES.**
7. **THE IRRIGATION CONTRACTOR IS RESPONSIBLE FOR THE INSTALLATION OF IRRIGATION SLEEVING. SLEEVES ARE REQUIRED FOR BOTH PIPING AND ELECTRICAL WIRING AT EACH HARDSCAPE CROSSING. COORDINATE INSTALLATION OF SLEEVING WITH OTHER TRADES. ANY PIPE OR WIRE WHICH PASSES BENEATH EXISTING HARDSCAPE WHERE SLEEVING WAS NOT INSTALLED WILL REQUIRE HORIZONTAL BORING BY THE IRRIGATION CONTRACTOR. PIPE SLEEVES SHALL BE SIZED TWICE THE NOMINAL SIZE OF THE PIPE PASSING THROUGH.**
8. **INSTALL ALL ELECTRICAL POWER TO THE IRRIGATION CONTROL SYSTEM IN ACCORDANCE WITH THE NATIONAL ELECTRIC CODE AND ALL APPLICABLE LOCAL ELECTRIC UTILITY CODES.**
9. **THE FOLLOWING SHOULD BE NOTED REGARDING PIPE SIZING: IF A SECTION OF UNSIZED PIPE IS LOCATED BETWEEN TWO IDENTICALLY SIZED SECTIONS, THE UNSIZED PIPE IS THE SAME NOMINAL SIZE AS THE TWO SIZED SECTIONS. THE UNSIZED PIPE SHOULD NOT BE CONFUSED WITH THE DEFAULT PIPE SIZE NOTED IN THE LEGEND.**
10. **INSTALL TWO (2) #14 AWG CONTROL WIRES ON STANDARD WIRE SYSTEMS, FOR USE AS SPARES. INSTALL SPARE WIRES FROM CONTROLLER LOCATION TO EACH DEAD-END OF MAINLINE. COIL 3 FEET OF WIRE IN VALVE BOX.**
11. **ALL IRRIGATION VALVE BOXES TO BE LOW PROFILE BOXES WITH BLK ICV HBLT LIDS. (6.75 DEPTH).**

0 4 8 12 feet
SCALE: 1/4" = 1'-0"

Hines Inc
SITE WATER ENGINEERING SERVICES
323 W. DRAKE RD, SUITE 204
FORT COLLINS, COLORADO 80526
Telephone: 970.282.1800
Web: www.hinesinc.com

SYM	DESCRIPTION	DATE	APPR
	Final Design Submission	06/28/2023	

NAVFAC

PROFESSIONAL CERTIFICATION. I CERTIFY THAT THESE DOCUMENTS WERE PREPARED UNDER MY SUPERVISION AND THAT I AM DULY CERTIFIED BY THE IRRIGATION ASSOCIATION

ROB KURTZ · CERTIFIED IRRIGATION DESIGNER · IA · COMMERCIAL

Rob Kurtz
No. 003343
SEAL

MTFA architecture
3200 LANGSTON BOULEVARD, ARLINGTON, VA 22207
(703) 524 - 6616 www.mtfa.net

A/E INFO.

APPROVED

FOR COMMANDER NAVFAC

ACTIVITY
FINAL DESIGN SUBMISSION

SATISFACTORY TO DATE

DES QW | DRW - | CHK RK

PM/DM

BRANCH MANAGER

CHIEF ENG/ARCH

FIRE PROTECTION

DEPARTMENT OF THE NAVY
NAVAL FACILITIES ENGINEERING SYSTEMS COMMAND
PUBLIC WORKS DEPARTMENT BETHESDA
NAVAL FACILITIES ENGINEERING SYSTEMS COMMAND – WASHINGTON
NAVAL SUPPORT ACTIVITY BETHESDA, MARYLAND
UNIFORMED SERVICES UNIVERSITY OF THE HEALTH SCIENCES
BETHESDA, MD
Building 76E Roof Garden
Irrigation Plan

SCALE: AS NOTED

EPROJECT NO.: 1698751

CONSTR. CONTR. NO.

NAVFAC DRAWING NO.
13148404

SHEET 47 OF 49

L-301

DRAWFORM REVISION: 25 AUGUST 2020

G-004 100% Pre-Final Design Submission 03/10/2023
2/24/2023 10:01:56 AM

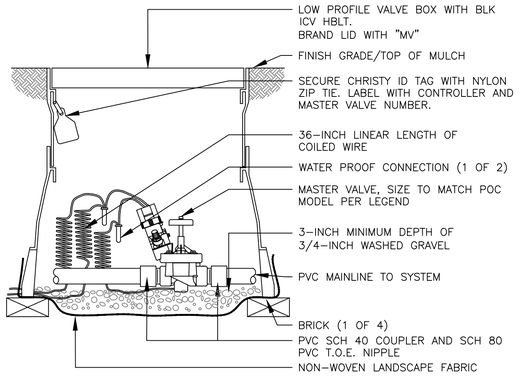

1 MASTER VALVE ASSEMBLY

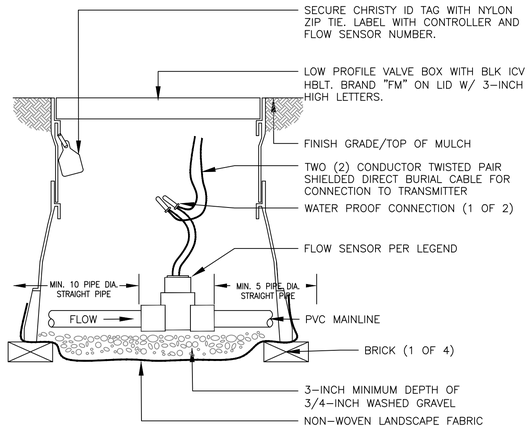

2 FLOW SENSOR ASSEMBLY

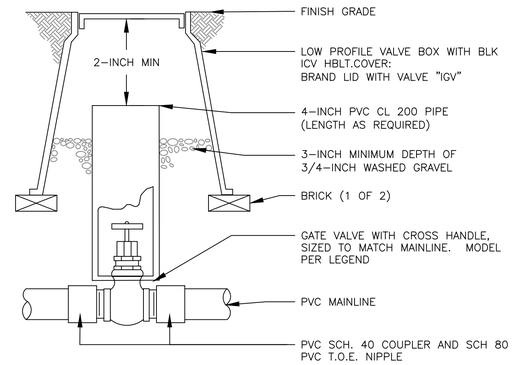

NOTES:
1. NOMINAL SIZE OF GATE VALVE TO MATCH NOMINAL MAINLINE SIZE.

3 ISOLATION GATE VALVE ASSEMBLY 2.5-INCH MAINLINE AND SMALLER

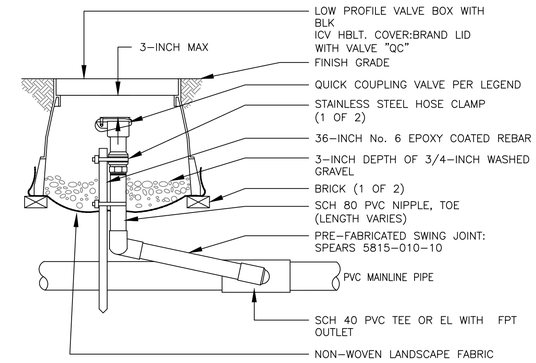

4 QUICK COUPLING VALVE ASSEMBLY

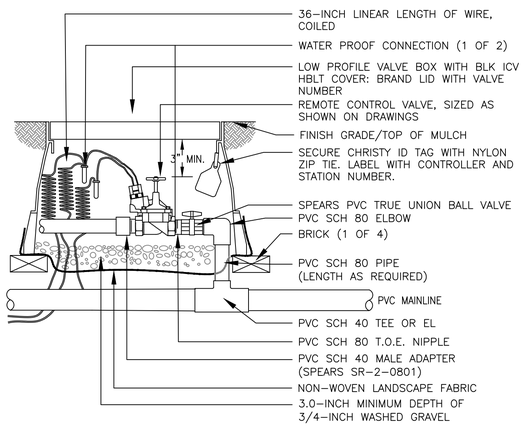

5 REMOTE CONTROL SPRINKLER VALVE ASSEMBLY

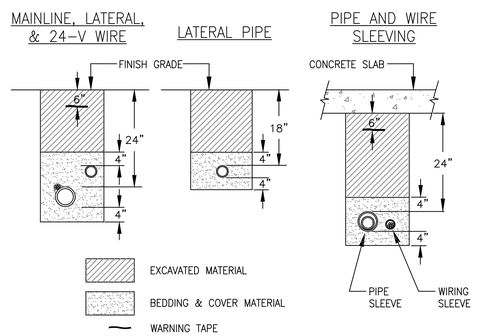

NOTES:
1. SLEEVE ALL PIPE AND WIRE SEPARATELY.
2. ALL PIPE TO BE INSTALLED PER MANUFACTURER'S SPECIFICATIONS."SNAKE" UNSLEEVED PLASTIC PIPE IN TRENCH. PROVIDE A MINIMUM OF 2" CLEARANCE TO SIDE OF TRENCH AND BETWEEN PIPES.
3. ALL 120–V WIRING SHALL BE INSTALLED IN ACCORDANCE WITH LOCAL CODE REQUIREMENTS. TAPE AND BUNDLE 24–V WIRE EVERY 10' AND PROVIDE LOOSE 20" LOOP AT ALL CHANGES OF DIRECTION OVER 30 DEGREES.

6 TYPICAL TRENCHING DETAIL

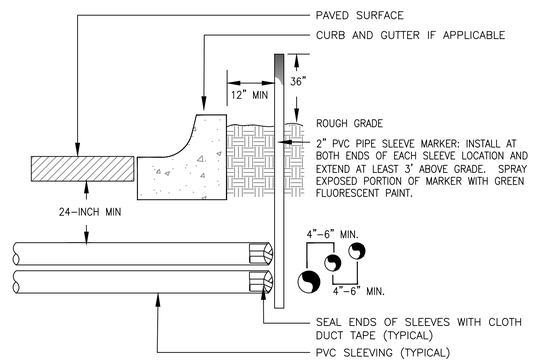

NOTE:
1) ALL SLEEVING TO BE CLASS 200 BE PVC, SIZED AS NOTED.
2) INSTALL SLEEVES IN SIDE–BY–SIDE CONFIGURATION WHERE MULTIPLE SLEEVES ARE TO BE INSTALLED. SPACE SLEEVES 4" TO 6" APART. DO NOT STACK SLEEVES VERTICALLY.

7 TYPICAL SLEEVING DETAIL

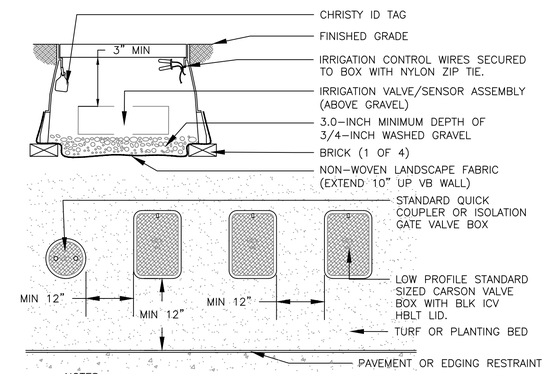

NOTES:
1. INSTALL ONLY ONE RCV TO VALVE BOX. LOCATE AT LEAST 12–INCHES FROM AND ALIGN WITH NEARBY WALLS OR EDGES OF PAVED AREAS. GROUP RCV ASSEMBLIES TOGETHER WHERE PRACTICAL.
4. GROUP RCV ASSEMBLIES TOGETHER WHERE PRACTICAL, BUT AVOID GROUPING MORE THAN THREE (3) STANDARD VALVE BOXES TOGETHER IN A SERIES.
5. ARRANGE GROUPED VALVE BOXES IN RECTANGULAR PATTERNS.

8 TYPICAL VALVE BOX INSTALLATION

Hines Inc
SITE WATER ENGINEERING SERVICES
323 W. DRAKE RD, SUITE 204
FORT COLLINS, COLORADO 80526
Telephone: 970.282.1800
Web: www.hinesinc.com

SYM	DESCRIPTION	DATE	APPR
	Final Design Submission	06/28/2023	

NAVFAC

PROFESSIONAL CERTIFICATION: I CERTIFY THAT THESE DOCUMENTS WERE PREPARED UNDER MY SUPERVISION AND THAT I AM DULY CERTIFIED BY THE IRRIGATION ASSOCIATION

ROB KURTZ No. 003343 COMMERCIAL 08-28-23

Rob Kurtz
No. 003343
SEAL

MTFA architecture
3200 LANGSTON BOULEVARD, ARLINGTON, VA 22207
(703) 524 - 8616 www.mtfa.net
A/E INFO

APPROVED

FOR COMMANDER NAVFAC

ACTIVITY: FINAL DESIGN SUBMISSION

SATISFACTORY TO DATE

DES QW | DRW - | CHK RK

PM/DM

BRANCH MANAGER

CHIEF ENG/ARCH

FIRE PROTECTION

DEPARTMENT OF THE NAVY
NAVAL FACILITIES ENGINEERING SYSTEMS COMMAND
PUBLIC WORKS DEPARTMENT, BETHESDA
NAVAL FACILITIES ENGINEERING SYSTEMS COMMAND – WASHINGTON
NAVAL SUPPORT ACTIVITY BETHESDA, MARYLAND
UNIFORMED SERVICES UNIVERSITY OF THE HEALTH SCIENCES
BETHESDA, MD

Building 76E Roof Garden

Irrigation Details

SCALE:

EPROJECT NO.: 1698751

CONSTR. CONTR. NO.

NAVFAC DRAWING NO. 13148458

SHEET 48 OF 49

L-302

DRAWFORM REVISION: 25 AUGUST 2020

G-004 100% Pre-Final Design Submission 03/10/2023
2/24/2023 10:01:56 AM

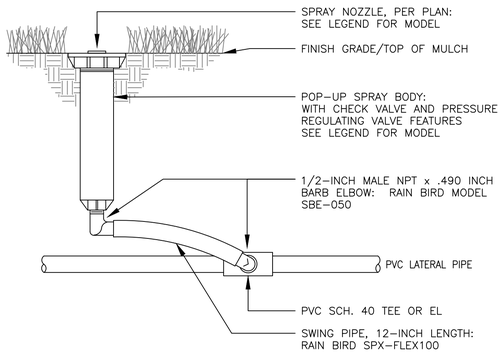

9 6-INCH POP UP SPRAY SPRINKLER ASSEMBLY

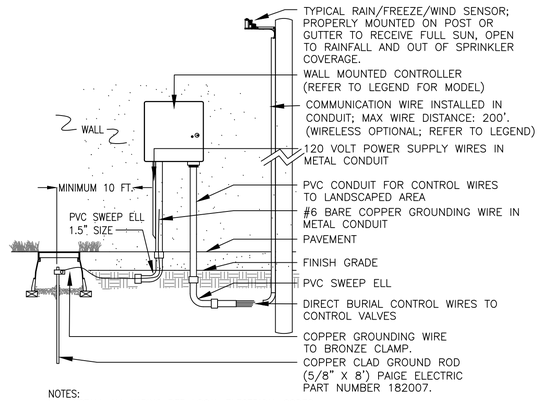

NOTES:
1. INSTALL ALL WIRING PER LOCAL ELECTRICAL CODES.
2. INSTALL GROUND ROD WITHIN IRRIGATED TURF AREA. IF IRRIGATED TURF AREA IS NOT IN CLOSE PROXIMITY TO CONTROLLER, INSTALL ONE (1) DRIP EMITTER FROM NEAREST DRIP VALVE IN VALVE BOX HOUSING GROUNDING ROD.

10 WALL MOUNT CONTROLLER ASSEMBLY

Hines Inc
SITE WATER ENGINEERING SERVICES
323 W. DRAKE RD, SUITE 204
FORT COLLINS, COLORADO 80526
Telephone: 970.282.1800
Web: www.hinesinc.com

SYM	DESCRIPTION	DATE	APPR
	Final Design Submission	06/28/2023	

NAVFAC

PROFESSIONAL CERTIFICATION. I CERTIFY THAT THESE DOCUMENTS WERE PREPARED UNDER MY SUPERVISION AND THAT I AM DULY CERTIFIED BY THE IRRIGATION ASSOCIATION

ROB KURTZ CERTIFIED IRRIGATION DESIGNER 003343 COMMERCIAL 06-28-23

Rob Kurtz
No. 003343
SEAL

MTFA architecture
3200 LANGSTON BOULEVARD, ARLINGTON, VA 22207
(703) 524 - 8616 www.mtfa.net

A/E INFO

APPROVED

FOR COMMANDER NAVFAC

ACTIVITY
FINAL DESIGN SUBMISSION

SATISFACTORY TO DATE

DES QW | DRW - | CHK RK

PMDM

BRANCH MANAGER

CHIEF ENG/ARCH

FIRE PROTECTION

DEPARTMENT OF THE NAVY
NAVAL FACILITIES ENGINEERING SYSTEMS COMMAND – WASHINGTON
PUBLIC WORKS DEPARTMENT, BETHESDA
NAVAL FACILITIES ENGINEERING SYSTEMS COMMAND
NAVAL SUPPORT ACTIVITY BETHESDA, MARYLAND
UNIFORMED SERVICES UNIVERSITY OF THE HEALTH SCIENCES
BETHESDA, MD
Building 76E Roof Garden
Irrigation Details

SCALE:

EPROJECT NO.: 1698751

CONSTR. CONTR. NO.

NAVFAC DRAWING NO.
13148459

SHEET 49 OF 49

L-303

DRAWFORM REVISION: 25 AUGUST 2020

G-004 100% Pre-Final Design Submission 03/10/2023
2/24/2023 10:01:56 AM