GEORGE WASHINGTON BIRTHPLACE NATIONAL MONUMENT
REPLACE THE GEOTHERMAL SYSTEM AT THE MEMORIAL HOUSE MUSEUM

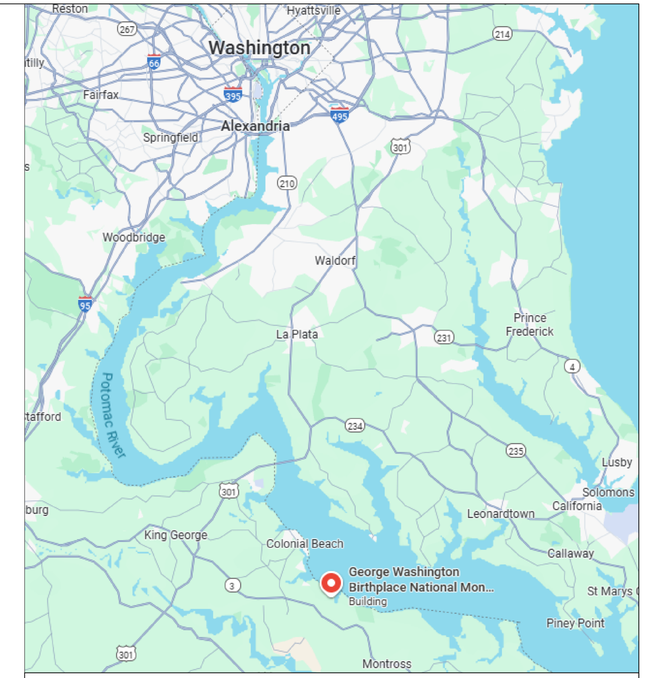

COLONIAL BEACH
VIRGINIA

SHEET NO.SHEET	SUB	TITLE
1	CS	COVER SHEET
2	SI1.0	PLAN
3	SI2.0	DETAILS
4	SI2.0	DETAILS
5	M0.1	MECHANICAL LEGEND AND NOTES
6	M1.0	MECHANICAL SITE PLAN
7	M2.0	MECHANICAL BASEMENT DEMOLITION FLOOR PLAN
8	M2.1	MECHANICAL BASEMENT NEW WORK FLOOR PLAN
9	M2.2	MECHANICAL LEVEL 1 FLOOR PLAN
10	M2.3	MECHANICAL LEVEL 2 FLOOR PLAN
11	M3.0	MECHANICAL FLOW DIAGRAM
12	M4.0	MECHANICAL SCHEDULE
13	M5.0	MECHANICAL DETAILS
14	M5.1	MECHANICAL DETAILS
15	M5.2	MECHANICAL DETAILS
16	M5.3	MECHANICAL DETAILS
17	E0.1	ELECTRICAL GENERAL NOTES
18	E1.0	ELECTRICAL SITE PLAN
19	E2.0	ELECTRICAL DEMOLITION FLOOR PLAN
20	E2.1	ELECTRICAL NEW WORK FLOOR PLAN

BID SET FEBRUARY 2026

UNITED STATES
DEPARTMENT OF THE INTERIOR
NATIONAL PARK SERVICE
HISTORIC ARCITECTURE, CONSERVATION & ENGINEERING
INTERIOR REGION 1
NORTH ATLANTIC & APPALACHIAN

TITLE OF DRAWING
REPLACE THE GEOTHERMAL SYSTEM
MEMOIRAL HOUSE

NAME OF PARK
GEORGE WASHINGTONS BIRTHPLACE NM

REGION	COUNTY	STATE
INTERIOR 1	WESTMORELAND	VIRGINIA

DRAWING NO. 332
114081

PMIS/PKG NO. 305342

SHEET 1 OF 20

ABRREVIATIONS

°F	DEGREES FAHRENHEIT
Ø	DIAMETER
AAV	AUTOMATIC AIR VENT
AC	AIR CONDITIONING
ACC	AIR COOLED CONDENSER UNIT
ACD	AUTOMATIC CONTROL DAMPER
ACV	AUTOMATIC CONTROL VALVE
ADJ	ADJUSTABLE
AFF	ABOVE FINISHED FLOOR
AHU	AIR HANDLING UNIT
ALT	ALTERNATE ALUM ALUMINUM
AS	AIR SEPARATOR
ATD	AIR TERMINAL DEVICE
ATV	ATMOSPHERIC VENT
AVG	AVERAGE
BAS	BUILDING AUTOMATION SYSTEM
BBD	BOILER BLOW DOWN
BDD	BACKDRAFT DAMPER
BF	BOILER FEED WATER
BHP	BRAKE HORSEPOWER
BLDG	BUILDING
B	BOILER
BOD	BOTTOM OF DUCT
BOP	BOTTOM OF PIPE
BSMT	BASEMENT
BTU	BRITISH THERMAL UNIT
BTUH	BRITISH THERMAL UNIT PER HOUR
CC	COOLING COIL
CD	CONDENSATE DRAIN
CFM	CUBIC FEET PER MINUTE CH CHILLER
CHEM	CHEMICAL FEED
CHW	CHILLED WATER
CHWR	CHILLED WATER RETURN
CHWS	CHILLED WATER SUPPLY
CO	CLEAN-OUT
CU	CONDENSING UNIT
CUF	CUBIC FEET
CUH	CABINET UNIT HEATER
D	DRAIN
DB	DRY BULB TEMPERATURE
DDC	DIRECT DIGITAL CONTROL
DIA	DIAMETER
DIFF	DIFFUSER
DN	DOWN
DWG	DRAWING
DX	DIRECT EXPANSION
(E)	EXISTING
EA	EACH
EAT	ENTERING AIR TEMPERATURE
EF	EXHAUST FAN
EFF	EFFICIENCY
ELEC	ELECTRICAL
ELEV	ELEVATION
ERU	ENERGY RECOVERY UNIT
ESP	EXTERNAL STATIC PRESSURE
ET	EXPANSION TANK
EUH	ELECTRIC UNIT HEATER
EXH	EXHAUST
EWT	ENTERING WATER TEMPERATURE
EX	EXHAUST
EXP	EXPANSION
F	FAN
FAS	FIRE ALARM SYSTEM
FTR	FINNED TUBE RADIATION
FCU	FAN COIL UNIT
FCV	FLOW CONTROL VALVE
FG	FIBERGLASS
FLEX	FLEXIBLE
FLR	FLOOR FLRDR FLOOR DRAIN
FP	FIRE PROTECTION
FPM	FEET PER MINUTE
FT	FEET
FT/SEC	FEET PER SECOND
G	GAS
GA	GAUGE
GAL	GALLONS
GALV	GALVANIZED
GC	GENERAL CONTRACTOR
GND	GROUND
GPH	GALLONS PER HOUR
GPM	GALLONS PER MINUTE
GRD	GRADE (GROUND LEVEL)
GWB	GYPSUM WALL BOARD
H	HEIGHT
HB	HOSE BIBB CONN W/CHAINED CAP
HC	HEATING COIL
HCPD	HANDICAPPED
HD	HEAD
HP	HORSEPOWER H
HR	HOUR
HRC	HEAT RECOVERY COIL - GLYCOL
HRU	HEAT RECOVERY UNIT
HU	HUMIDIFIER
HV	HEATING & VENTILATING UNIT
HW	HOT WATER
HWR	HOT WATER RETURN
HWS	HOT WATER SUPPLY
HX	HEAT EXCHANGER
HZ	HERTZ
ID	INSIDE DIAMETER
IN	INCHES
INSUL	INSULATION
KW	KILOWATT
KVA	KILOVOLT AMPERE
L	LENGTH
LAT	LEAVING AIR TEMPERATURE
LB	POUND
LD	LINEAR DIFFUSER
LF	LINEAR FEET
LVG	LEAVING
LWT	LEAVING WATER TEMPERATURE
MAV	MANUAL AIR VENT
MAX	MAXIMUM
MBH	THOUSAND BRITISH THERMAL UNITS PER HOUR
MCA	MINIMUM CIRCUIT AMPS
MECH	MECHANICAL
MFR	MANUFACTURER
MIN	MINIMUM
MU	MAKEUP WATER
N/A	NOT APPLICABLE
NC	NORMALLY CLOSED
NC	NOISE CRITERIA
NO	NORMALLY OPEN
NO.	NOM NOMINAL
NTS	NOT TO SCALE
OA	OUTSIDE AIR
OB	OCTAVE BAND
OD	OUTSIDE DIAMETER
OBD	OPPOSED BLADE DAMPER
OED	OPEN END DUCT
OV	OUTLET VELOCITY
P	PUMP
PC	PUMPED CONDENSATE
PCF	POUNDS PER CUBIC FOOT
PD	PRESSURE DROP PH PHASE
PH	PERIMETER HEAT
PHC	PREHEAT COIL
PHX	PLATE HEAT EXCHANGER
PLBG	PLUMBING
POS	PROVIDED BY OTHER SECTION(S)
PRESS	PRESSURE
PRIM	PRIMARY
PSIA	POUNDS PER SQUARE INCH ABSOLUTE
PSID	POUNDS PER SQUARE INCH DIFFERENTIAL
PSIG	POUNDS PER SQUARE INCH GAUGE
PVC	POLYVINYL CHLORIDE
R	REHEAT
RA	RETURN AIR
RD	REFRIGERANT DISCHARGE (HOT GAS)
REP	REPRESENTATIVE
RET	RETURN
RF	RETURN FAN
RG	RETURN GRILLE
R.H.	RELATIVE HUMIDITY
RH	REHEAT
RHC	REHEAT COIL
RHP	RADIANT HEATING PANEL
RL	REFRIGERANT LIQUID
RLF	RELIEF RR RETURN REGISTER
RM	ROOM
RPM	REVOLUTIONS PER MINUTE
RS	REFRIGERANT SUCTION
RV	RETURN AIR VALVE/BOX
SA	SUPPLY AIR
SATT	SOUND ATTENUATOR
SCH	SCHEDULE
SCR	SCREEN
SD	SMOKE DAMPER
SDET	SMOKE DETECTOR
SF	SUPPLY FAN
SFD	COMBINATION AUTOMATIC SMOKE/FIRE DAMPER WITH ACCESS DOOR
SM	SHEETMETAL
SOV	SOLENOID OPERATED VALVE
SP	STATIC PRESSURE
SPECS	SPECIFICATIONS
SQ	SQUARE
SQFT	SQUARE FEET
SS	STAINLESS STEEL
STD	STANDARD
STDBY	STANDBY
STL	STEEL
SUCT	SUCTION
SUP	SUPPLY
SV	VARIABLE VOLUME SUPPLY AIR TERMINAL BOX
TEMP	TEMPERATURE
TOD	TOP OF DUCT
TOP	TOP OF PIPE
TSP	TOTAL STATIC PRESSURE
TYP	TYPICAL
UC	UNDERCUT DOOR
UH	UNIT HEATER
V	VENT
VD	VOLUME DAMPER
VEL	VELOCITY
VERT	VERTICAL
VFD	VARIABLE FREQUENCY DRIVE
VTR	VENT THROUGH ROOF
VV	SUPPLY VAV BOX
W	WIDTH
W/	WITH
W/O	WITHOUT
WB	WET BULB TEMPERATURE
WG	WATER GAUGE
WMS	WIRE MESH SCREEN

GENERAL NOTES

1. GENERAL NOTES, SYMBOLS LIST AND DETAILS ARE APPLICABLE TO ALL MX.XX AND P.XX SERIES DRAWINGS.
2. DRAWINGS ARE DIAGRAMMATIC, DETERMINE EXACT LOCATIONS OF SYSTEMS AND COMPONENTS IN FIELD.
3. COORDINATE WORK OF THIS SECTION WITH THAT OF OTHER SECTIONS.
4. REFER TO SPECIFICATIONS FOR ADDITIONAL REQUIREMENTS.
5. PROVIDE INFORMATION AND HARDWARE AS NECESSARY TO COORDINATE CONCRETE PADS AND STEEL PLATFORMS REQUIRED FOR MECHANICAL WORK.
6. COORDINATE ROOF PENETRATIONS WITH WORK OF OTHER SECTIONS AND WITH FLASHING REQUIREMENTS.
7. SHEETMETAL FITTINGS SHOWN ARE TO BE PROVIDED. NO SUBSTITUTES SHALL BE ALLOWED WITHOUT PRIOR CONSENT FROM ARCHITECT/ENGINEER.
8. REFER TO SPECIFICATIONS FOR DUCTWORK CONSTRUCTION CLASSES, SEAL, AND LEAKAGE CLASSES.
9. RUN DUCTS AND PIPING CONCEALED, UNLESS SPECIFIED OTHERWISE, AND CLEAR OF CEILING INSERTS. ALL DUCTWORK SHALL BE INSTALLED AS CLOSE AS POSSIBLE TO WALL AND UNDERSIDE OF BEAMS AND JOISTS.
10. INSTALL THERMOSTATS AT LOCATIONS SHOWN ON PLANS OR AS DIRECTED BY ARCHITECT. MOUNTING HEIGHT AFF SHALL COMPLY WITH ADA.
11. ALL WORK SHALL BE COORDINATED WITH ALL TRADES INVOLVED. OFFSETS IN PIPING AND DUCTS AND TRANSITIONS AROUND OBSTRUCTIONS SHALL BE PROVIDED AT NO ADDITIONAL COST.
12. VERIFY ALL EQUIPMENT CONNECTIONS WITH MANUFACTURER'S CERTIFIED DRAWINGS. VERIFY AND PROVIDE DUCT TRANSITIONS TO FURNISHED EQUIPMENT. FIELD VERIFY AND COORDINATE ALL DIMENSIONS BEFORE FABRICATION.
13. ACCESS PANELS SHALL BE PROVIDED TO CLEAN COILS AND SERVICE DAMPERS, HEATERS, VALVES AND ALL CONCEALED MECHANICAL EQUIPMENT.
14. SUPPORT ALL EQUIPMENT, PIPING AND DUCTWORK FROM BUILDING STRUCTURE TO PROVIDE A VIBRATION FREE INSTALLATION. PROVIDE TO GC A LIST OF ALL WEIGHTS AND METHODS OF SUPPORT FOR COORDINATION. REFER TO SPECIFICATIONS FOR ADDITIONAL REQUIREMENTS.
15. ALL CONTROL WIRE AND CONDUIT SHALL COMPLY WITH NEC, AND DIVISION 26 SPECIFICATIONS.
16. INTERNAL AIR FLOW DIMENSIONS ARE SHOWN FOR DUCTS. CONTRACTOR SHALL INCREASE SIZE FOR LINER IF APPLICABLE.
17. ALL MATERIALS AND EQUIPMENT SHALL BE NEW, OTHER THAN SPECIFIC RENTED ITEMS IDENTIFIED ON PLANS.
18. DIFFUSER SIZES SHOWN ARE NECK SIZES; REGISTER AND GRILLE SIZE ARE NOMINAL.
19. ALL CONDENSATE DRAINLINES SHALL BE PIPED FULL SIZE OF THE UNIT DRAIN OUTSET.
20. PROVIDE FLEXIBLE CONNECTIONS ON ALL DUCTS CONNECTING TO FANS AND AIR HANDLING UNITS UNLESS INTERNALLY ISOLATED. ALL DUCTS TO BE GROUNDED ACROSS FLEXIBLE CONNECTION WITH FLEXIBLE COPPER GROUNDING STRAPS.
21. THE INSIDE OF DUCTWORK VISIBLE THROUGH A GRILLE OR DIFFUSER SHALL BE PAINTED FLAT BLACK.
22. INSULATE PIPING AND DUCTWORK AS SPECIFIED: PERFORM TESTS SPECIFIED BEFORE INSULATING.
23. PROVIDE HANGERS, CLAMPS, OFFSETS, EXPANSION JOINTS, ANCHORS AND GUIDES AS NECESSARY TO PREVENT STRESS ON PIPING.
24. PROVIDE VENTS AT HIGH POINTS IN PIPING SYSTEMS AND DRAIN VALVES AT LOW POINTS.
25. PROVIDE AT LEAST THREE-ELBOW SWING FOR PIPE TAKE-OFFS TO TERMINAL EQUIPMENT AND RISERS.
26. ELBOWS IN DUCT SYSTEMS SHALL BE FULL RADIUS (CENTERLINE RADIUS = 1.5 DUCT WIDTH) WHERE SPACE PERMITS. WHERE LIMITED CLEARANCE OCCURS, PROVIDE SHORT RADIUS ELBOW WITH FULL LENGTH SPLITTER VANES PER SMACNA. MITERED (SQUARE) ELBOWS WITH TURNING VANES MAY NOT BE SUBMITTED WITHOUT WRITTEN CONSENT FROM THE ARCHITECT/ENGINEER.
27. ISOLATION VALVES IN PIPING SYSTEMS ARE NOT SHOWN ON PLANS (FOR CLARITY) BUT ARE REQUIRED AT ALL PIPE BRANCHES AND CONNECTIONS TO EQUIPMENT REFER TO DETAIL SHEETS AND FLOW DIAGRAMS.
28. PITCH PIPING 1 INCH IN 20 FEET MINIMUM IN DIRECTION OF FLOW, TO ALLOW FOR DRAINING
29. MANUAL DAMPERS ARE NOT SHOWN ON THE DRAWINGS IN ORDER FOR DRAWING CLARITY. PROVIDE MANUAL ADJUSTABLE DAMPERS ON EACH LOW PRESSURE SUPPLY, RETURN, AND EXHAUST DUCT TAKE OFF, AND AT EACH TAKE OFF TO REGISTERS, GRILLES AND DIFFUSERS.
30. PROVIDE CEILING ACCESS PANELS BELOW ALL EQUIPMENT LOCATED ABOVE CEILINGS. EXACT SIZE AND LOCATION SHALL BE COORDINATED IN FIELD WITH ARCHITECT.

HVAC DEMOLITION SPECIFICATION

1. REFER TO ALL DRAWINGS SPECIFICATION FOR GENERAL DESCRIPTION OF AREAS REQUIRING DEMOLITION.
2. REFER TO CONSTRUCTION MANAGER'S INSTRUCTIONS FOR ALL EXISTING EQUIPMENT AND MATERIALS THAT SHALL REMAIN THE PROPERTY OF THE OWNER.
3. ITEMS OF VALUE WHICH ARE NOT DIRECTED TO BE RETURNED TO THE OWNER, SHALL BECOME THE PROPERTY OF THE CONTRACTOR AND SHALL BE REMOVED FROM SITE AND LEGALLY DISPOSED OF. STORAGE OR SALE OF ITEMS ON THE PROJECT SITE IS PROHIBITED.
4. PROTECTION: ENSURE THE SAFE PASSAGE OF PERSONS IN AND AROUND THE BUILDING DURING DEMOLITION. PREVENT INJURY TO PERSONS AND DAMAGE TO PROPERTY. PROVIDE ADEQUATE SHORING AND BRACING TO PREVENT COLLAPSE. IMMEDIATELY REPAIR DAMAGED PROPERTY TO THE CONDITION BEFORE BEING DAMAGED. TAKE EFFECTIVE MEASURES TO PREVENT WINDBLOWN DUST.
5. UTILITIES: MAINTAIN ALL UTILITIES EXCEPT THOSE REQUIRING REMOVAL OR RELOCATION. KEEP UTILITIES IN SERVICE AND PROTECT FROM DAMAGE. DO NOT INTERRUPT UTILITIES SERVING OCCUPIED AREAS WITHOUT FIRST OBTAINING PERMISSION FROM HARVARD FACILITIES. PROVIDE TEMPORARY SERVICES AS REQUIRED.
6. THESE DRAWINGS ARE DIAGRAMMATIC ONLY AND REFLECT OVERALL SYSTEM REMOVAL. NOT EVERY ITEM OR COMPONENT OF A SYSTEM IS SHOWN.
7. THIS CONTRACTOR SHALL PROVIDE SHUT DOWN OF SERVICES (BOILERS, AHU, PUMPS, ETC.) AND TRACING OF ALL PIPING WITHIN BASE BID.

DUCTWORK

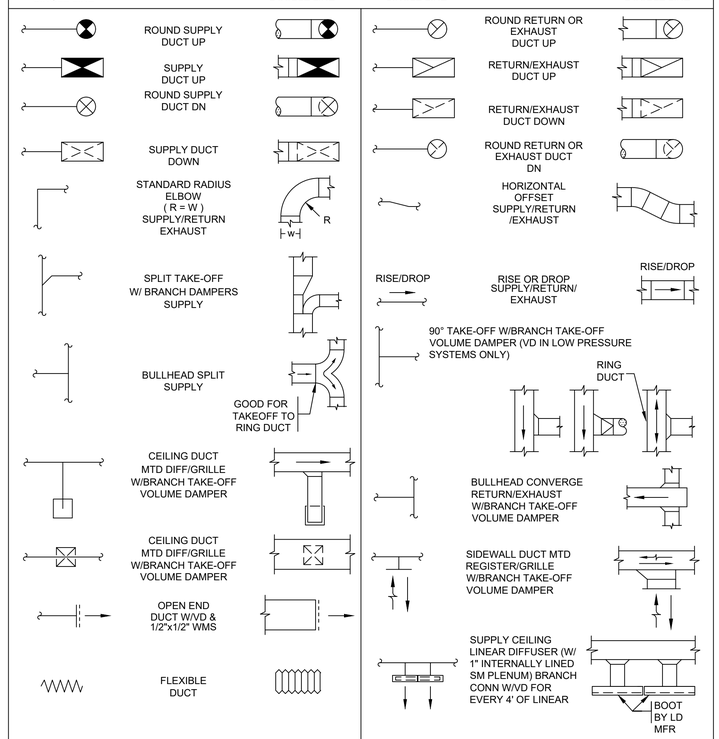

PIPING LEGEND

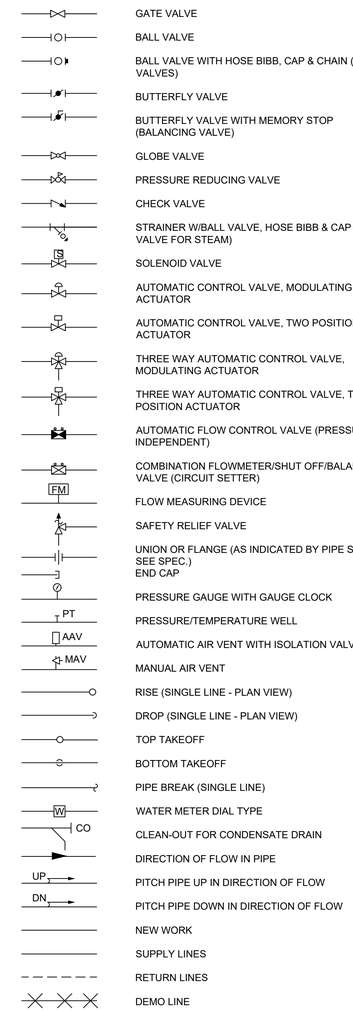

CALL OUT SYMBOLS

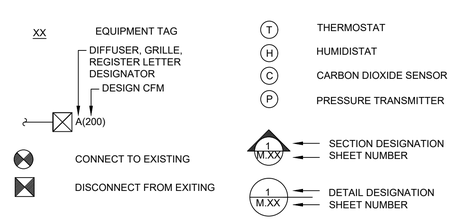

DESIGNED: ELS CADD ELS TECH. REVIEW: HACE DATE: 2/9/2026	SUB SHEET NO. M0.1	TITLE OF SHEET MECHANICAL LEGEND AND NOTES REPLACE GEOTHERMAL SYSTEM MEMORIAL HOUSE GEORGE WASHINGTON BIRTHPLACE NATIONAL MONUMENT	DRAWING NO. 332 / 114081 PMIS/PKG NO. 305342 SHEET 5 OF 20

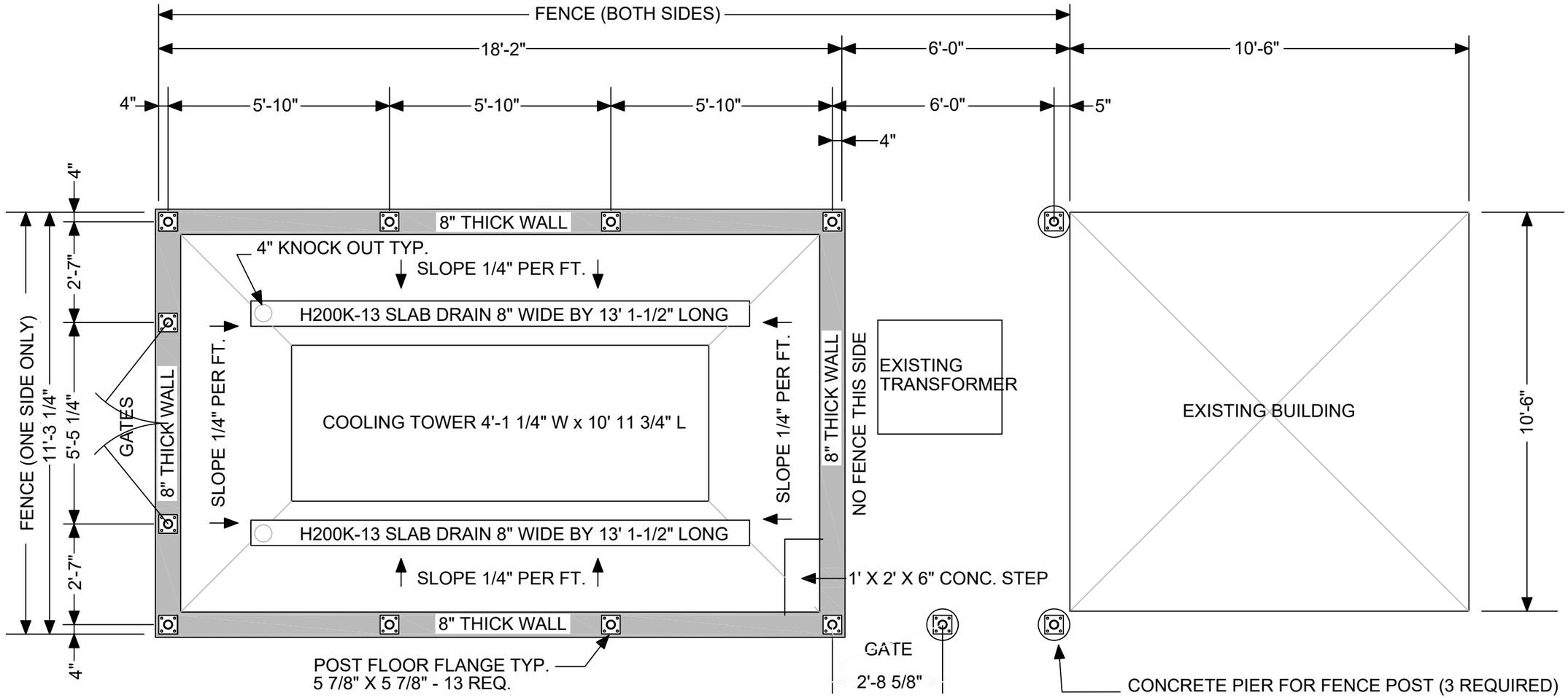

COOLING TOWER PIT
SCALE 1/8" = 1'-0"

1. SET 8" DIA X 24" SONOTUBE AND FILL WITH CONCRETE.
2. SET CHAIN LINK FENCE POST FLOOR FLANGES AT TOP OF CONCRETE WITH PIGTAIL OR L SHAPED BENT ANCHORS. ELEVATION TO MATCH TOP OF RETAINING WALL.
3. TOOL A $\frac{1}{2}$" RADIUS AROUND TOP EDGE OF CONCRETE.
4. REMOVE TOP 6" OF SONOTUBE ONCE CONCRETE HAS SET.

DRAINAGE NOTES:

1. A 6" PERFORATED TILE SHALL RUN ALONG THE INSIDE OF THE RETAINING WALL FOOTING. BACKFILL AROUND PIPE WITH $\frac{3}{4}$" STONE. WRAP STONE IN FILTER FABRIC AS SHOWN.
2. UTILIZE 4" BOTTOM KNOCK OUT IN TRENCH DRAIN AND EXTEND A SOLID 4" PVC PIPE FROM THE TRENCH DRAIN TO THE 6" PERFORATED PIPE.
3. ALLOW THE 6" PERFORATED PIPE TO PENETRATE THE RETAINING WALL FOOTING NEAR THE DOUBLE SET OF GATES AND TERMINATE 10' AWAY FROM RETAINING WALL WITH A NDS-FWAS24-FLO PREFABRICATED DRY WELL KIT 24"DIA x 48". SET WELL ON 4" THICK LAYER OF $\frac{3}{4}$" STONE AND WRAP WELL STRUCTURE IN FILTER FABRIC.
4. TOP TO HAVE A 6" SURFACE DRAIN INLET. RIM ELEVATION TO MATCH SURROUNDING GRADE.

DESIGNED: J. SPECK	SUB SHEET NO.	PLAN	DRAWING NO.
DRAWN: J. SPECK	SI1.0	REPLACE GEOTHERMAL SYSTEM MEMORIAL HOUSE GEORGE WASHINGTON BIRTHPLACE NATIONAL MONUMENT	PKG. NO. — / 4 —
TECH REVIEW: J. SPECK			SHEET 2 OF 20
DATE: 02/02/2026			

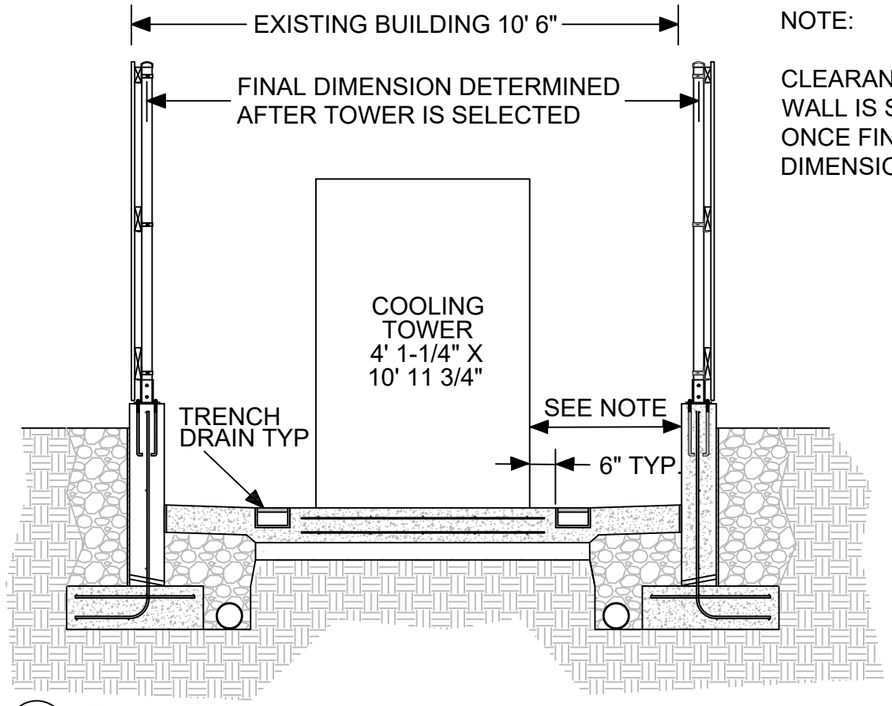

PIT
SCALE 1/8" = 1'-0"

NOTE:

CLEARANCE BETWEEN COOLING TOWER AND CONCRETE WALL IS SHOWN AT 3'-0". VERIFY MINIMUM CLEARANCES ONCE FINAL COOLING TOWER IS SELECTED AND ADJUST DIMENSIONS ACCORDINGLY.

1. COVER OVER ALL REBAR TO BE 2" MINIMUM ALL SIDES.
2. CONCRETE TO BE 4,000 P.S.I.
3. REINFORCING STEEL TO BE GRADE 60.
4. DRAIN PIPE TO BE 6" PERFORATED PVC.
5. LAPPING OF REBAR BE 18".
6. REBAR FOR EQUIPMENT PAD TO BE 2 LAYERS #4 BAR 12" O.C. EACH WAY.
7. REBAR FOR WALL TO BE #3 BAR 18" O.C. HORIZONTAL AND 16" O.C. VERTICAL BENT INTO FOOTING AS SHOWN.
8. REBAR IN TOP OF FOOTING TO BE #4 BAR 12" O.C. EACH WAY.
9. REBAR IN BOTTOM OF FOOTING TO BE #4 BAR 14" O.C.

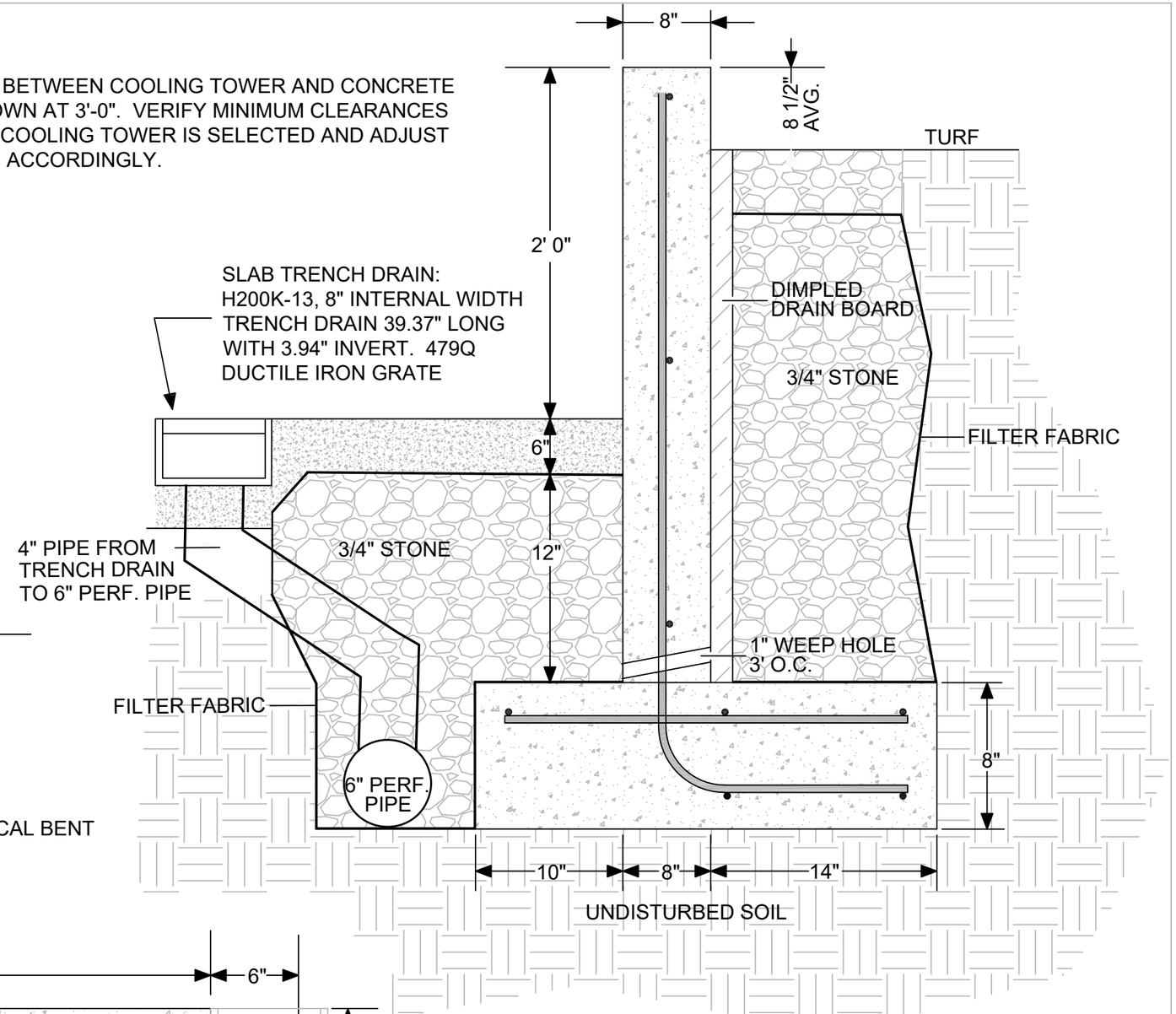

RETAINING WALL
SCALE 1/4" = 1'-0"

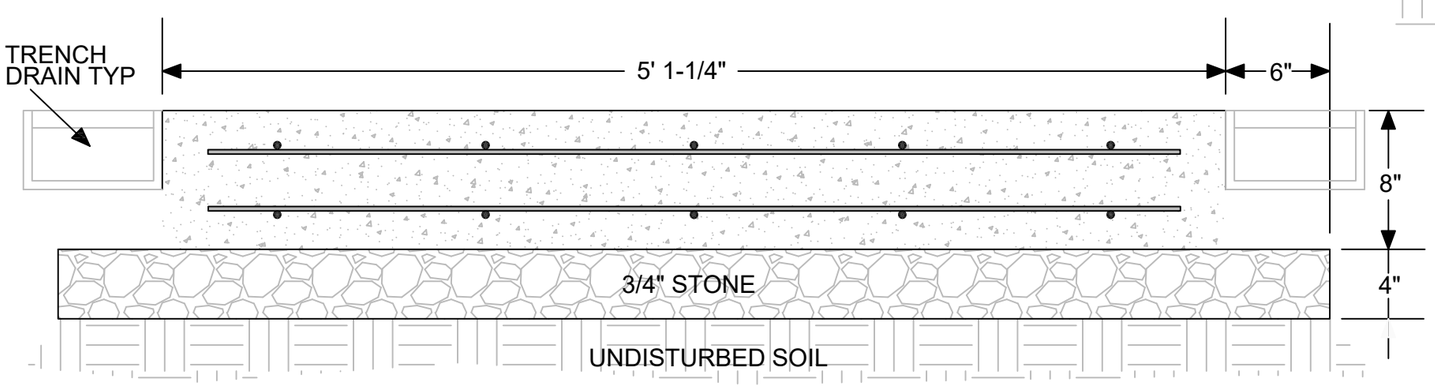

EQUIPMENT PAD
SCALE 1/4" = 1'-0"

DESIGNED: J. SPECK	SUB SHEET NO.	DETAILS	DRAWING NO.
DRAWN: J. SPECK	SI2.0	REPLACE GEOTHERMAL SYSTEM MEMORIAL HOUSE GEORGE WASHINGTON BIRTHPLACE NATIONAL MONUMENT	PKG. NO. — SHEET 3
TECH REVIEW: J. SPECK			— OF 20
DATE: 02/02/2026			4

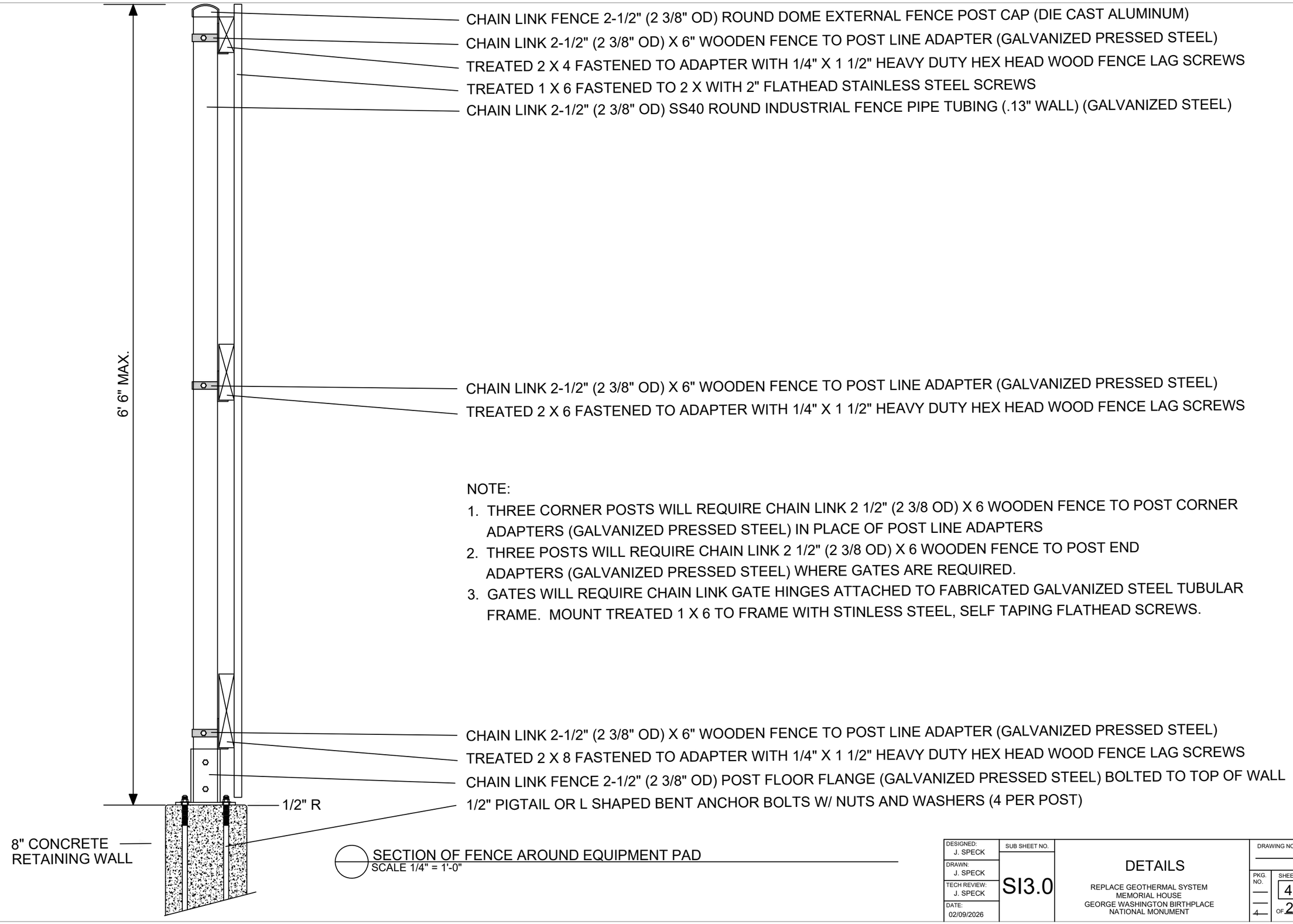

NOTE:

1. THREE CORNER POSTS WILL REQUIRE CHAIN LINK 2 1/2" (2 3/8 OD) X 6 WOODEN FENCE TO POST CORNER ADAPTERS (GALVANIZED PRESSED STEEL) IN PLACE OF POST LINE ADAPTERS
2. THREE POSTS WILL REQUIRE CHAIN LINK 2 1/2" (2 3/8 OD) X 6 WOODEN FENCE TO POST END ADAPTERS (GALVANIZED PRESSED STEEL) WHERE GATES ARE REQUIRED.
3. GATES WILL REQUIRE CHAIN LINK GATE HINGES ATTACHED TO FABRICATED GALVANIZED STEEL TUBULAR FRAME. MOUNT TREATED 1 X 6 TO FRAME WITH STINLESS STEEL, SELF TAPING FLATHEAD SCREWS.

SECTION OF FENCE AROUND EQUIPMENT PAD
SCALE 1/4" = 1'-0"

DESIGNED: J. SPECK	SUB SHEET NO.	DETAILS	DRAWING NO.
DRAWN: J. SPECK	SI3.0	REPLACE GEOTHERMAL SYSTEM MEMORIAL HOUSE GEORGE WASHINGTON BIRTHPLACE NATIONAL MONUMENT	PKG. NO. — — 4
TECH REVIEW: J. SPECK			SHEET 4 OF 20
DATE: 02/09/2026			

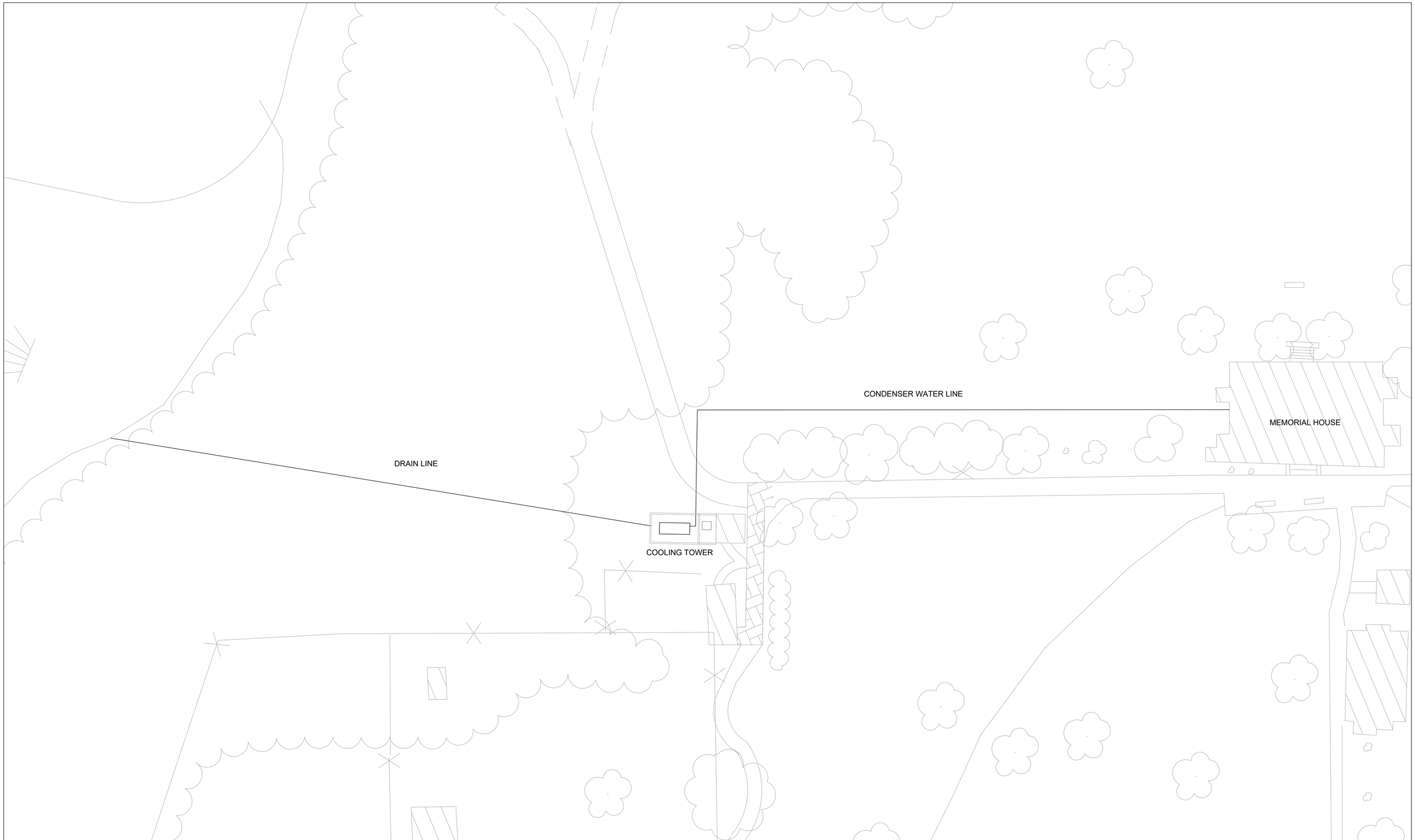

DESIGNED: ELS CADD ELS TECH. REVIEW: HACE DATE: 2/9/2026	SUB SHEET NO. M1.0	TITLE OF SHEET MECHANICAL SITE PLAN REPLACE GEOTHERMAL SYSTEM MEMORIAL HOUSE GEORGE WASHINGTON BIRTHPLACE NATIONAL MONUMENT	DRAWING NO. 332 114081 PMIS/PKG NO. 305342 SHEET 6 OF 20

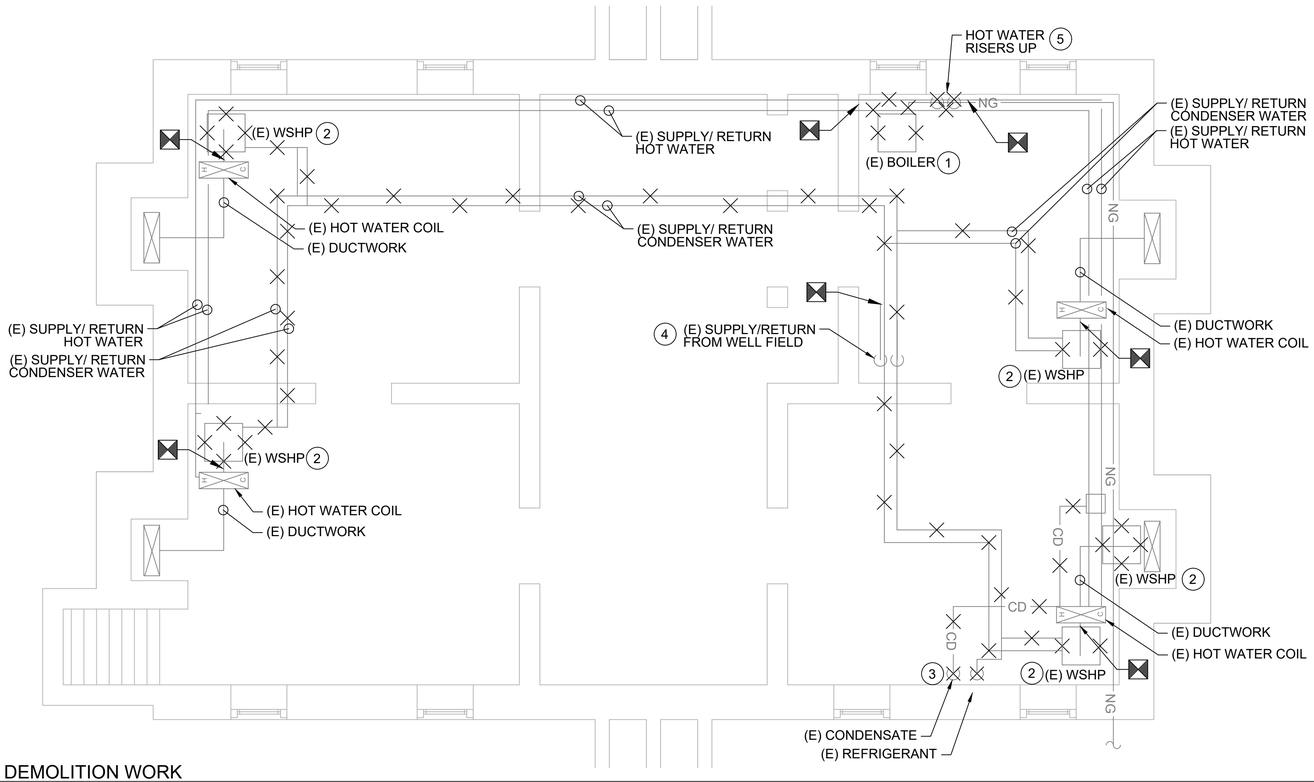

1 M2.0 DEMOLITION WORK
SCALE: 1/4" = 1'-0"

GENERAL NOTES:

1. THESE DRAWINGS ARE DIAGRAMMATIC IN NATURE AND NOT INTENDED TO SHOW ALL TRANSITIONS, OFFSETS, ETC. CONTRACTOR SHALL FIELD VERIFY EXISTING CONDITIONS AND PROVIDE ALL NECESSARY FITTINGS TO COMPLETE THE INTENT OF THE DRAWINGS. ANY DISCREPANCIES BETWEEN DRAWINGS AND FIELD CONDITIONS SHALL BE REPORTED TO THE CONTRACTING OFFICER FOR RESOLUTION. CONTRACTOR MAY LOCATE MECHANICAL EQUIPMENT DIFFERENTLY THAN SHOWN ON DRAWINGS DUE TO CONFLICTS, AS LONG AS FUNCTION AND/OR APPEARANCE ARE NOT AFFECTED.

SHEET NOTES:

1. DISCONNECT LP PIPING FROM BOILER AND PREPARE FOR RECONNECTION. DEMOLISH BOILER, VENT, PUMPS, WIRING, AND ACCESSORIES. CONCRETE PAD SHALL BE REUSED.
2. DISCONNECT DUCTWORK FROM WSHP. DUCTWORK AND HOT WATER COILS SHALL REMAIN. DEMOLISH WSHPs, ASSOCIATED PIPING, WIRING AND ACCESSORIES. RECLAIM AND VACATE ALL EXISTING REFRIGERANT PER EPA GUIDELINES.
3. DEMOLISH REFRIGERANT AND CONDENSATE LINE FROM COMPRESSOR TO BLOWER UNIT LOCATED IN THE ATTIC.
4. DISCONNECT AND TEMPORARY CAP GROUND SOURCE CONDENSING WATER LOOP AT BUILDING ENTRANCE. DEMOLISH ALL CONDENSING WATER PIPING. REMOVE ALL HANGERS AND SUPPORTS ASSOCIATED WITH THE SYSTEM COMPONENTS.
5. DEMOLISH VISIBLE HOT WATER PIPING RISERS THAT LEADS TO SECOND FLOOR. HOT WATER DISTRIBUTION PIPING TO COILS SHALL REMAIN.

1/4"=1'-0" 4' 0 4 8

DESIGNED: ELS CADD ELS TECH. REVIEW: HACE DATE: 2/9/2026	SUB SHEET NO. M2.0	TITLE OF SHEET BASEMENT FLOOR PLAN REPLACE GEOTHERMAL SYSTEM MEMORIAL HOUSE GEORGE WASHINGTON BIRTHPLACE NATIONAL MONUMENT	DRAWING NO. 332 / 114081 PMIS/PKG NO. 305342 SHEET 7 OF 20

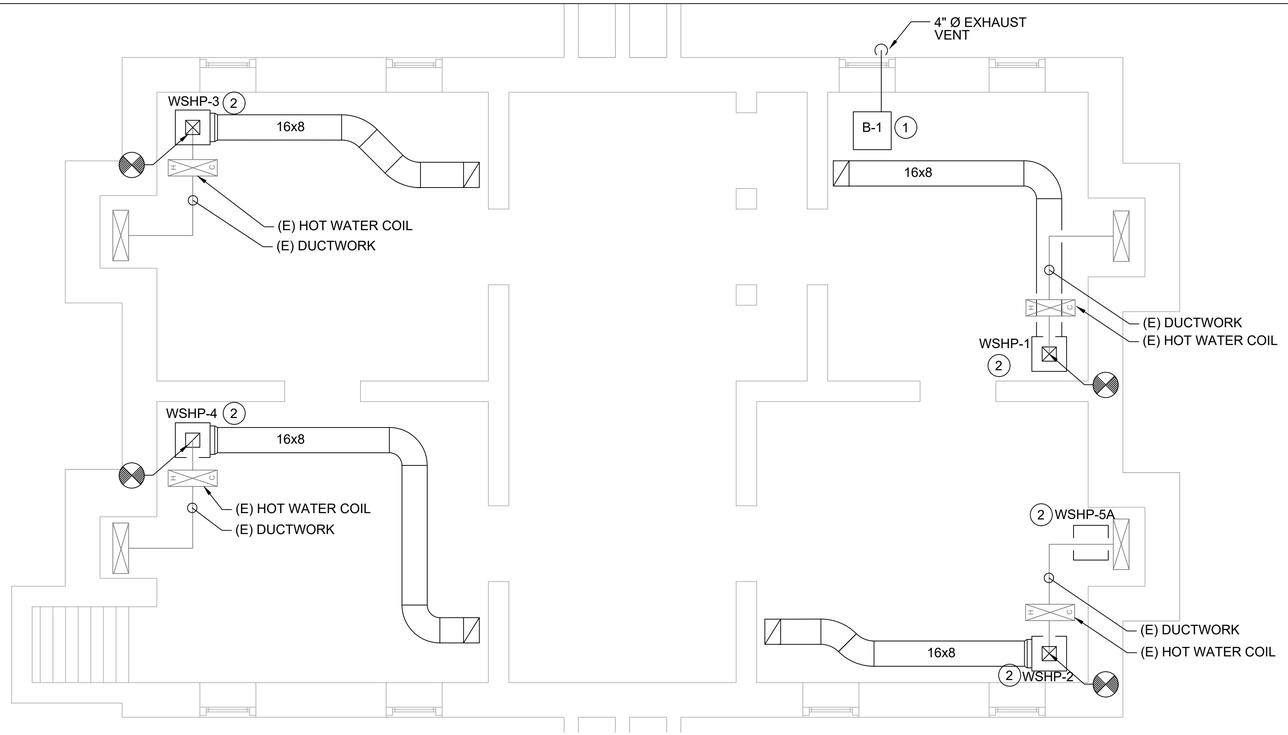

1 M2.1 NEW WORK - DUCTWORK
SCALE: 1/4" = 1'-0"

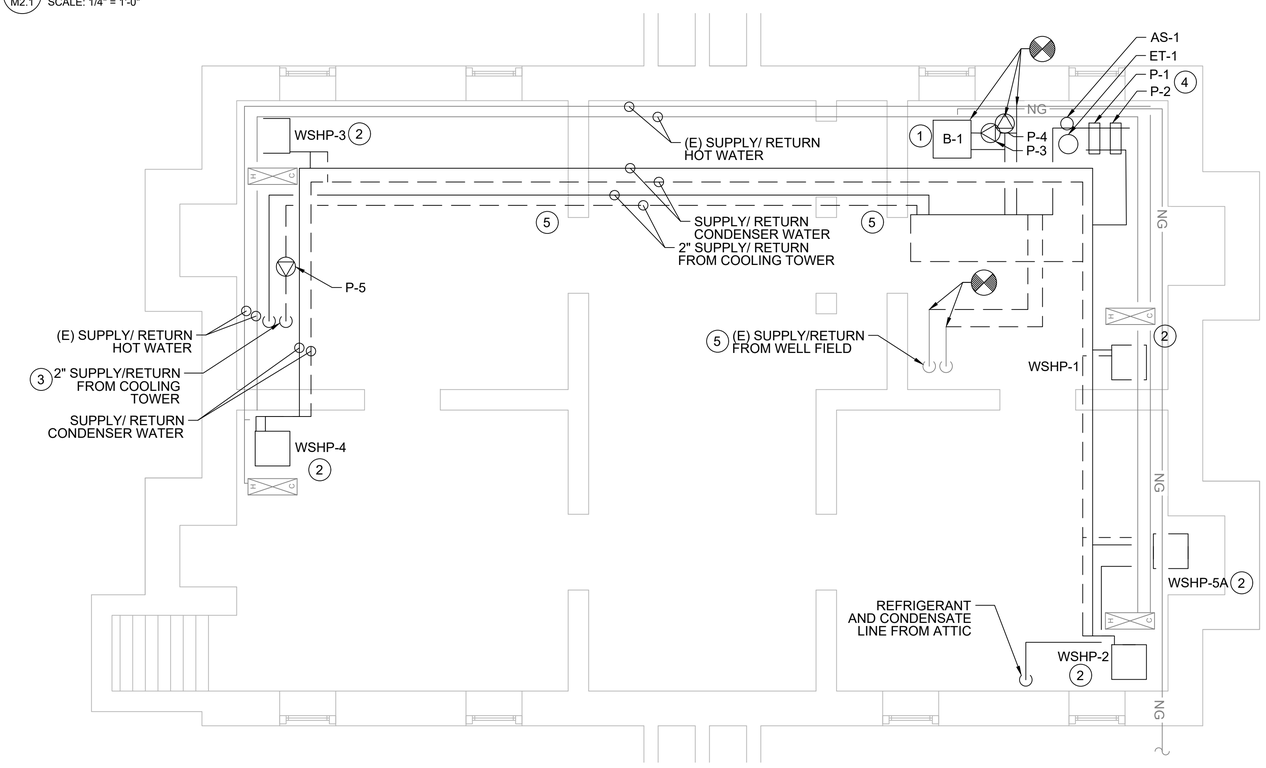

2 M2.1 NEW WORK - PIPING
SCALE: 1/4" = 1'-0"

GENERAL NOTES:

1. THESE DRAWINGS ARE DIAGRAMMATIC IN NATURE AND NOT INTENDED TO SHOW ALL TRANSITIONS, OFFSETS, ETC. CONTRACTOR SHALL FIELD VERIFY EXISTING CONDITIONS AND PROVIDE ALL NECESSARY FITTINGS TO COMPLETE THE INTENT OF THE DRAWINGS. ANY DISCREPANCIES BETWEEN DRAWINGS AND FIELD CONDITIONS SHALL BE REPORTED TO THE CONTRACTING OFFICER FOR RESOLUTION. CONTRACTOR MAY LOCATE MECHANICAL EQUIPMENT DIFFERENTLY THAN SHOWN ON DRAWINGS DUE TO CONFLICTS, AS LONG AS FUNCTION AND/OR APPEARANCE ARE NOT AFFECTED.

SHEET NOTES:

1. PROVIDE NEW BOILER. RECONNECT GAS LINE. PROVIDE NEW VENT AND RUN IN LOCATION OF EXISTING VENT AND DISCHARGE THROUGH EXISTING WINDOW OPENING. PROVIDE REQUIRED PIPING AND VALVES, REFER TO PIPING DIAGRAM.
2. PROVIDE NEW WSHPs. CLEAN EXISTING DUCTWORK AND RECONNECT WSHP. PROVIDE NEW RETURN DUCTWORK TO NEW FLOOR OPENING. CONNECT TO FLOOR GRILLE (GRILLE FURNISHED BY THE PARK). DO NOT REMOVE MORE FLOORING THAT NECESSARY TO INSTALL GRILLE. PROVIDE REQUIRED CONDENSER WATER PIPING AND VALVES, REFER TO PIPING DIAGRAM. EXISTING HOT WATER PIPING AND COILS TO REMAIN. RUN CONDENSATE DRAINS TO EXISTING CONDENSATE PUMP.
3. NEW COOLING TOWER LINES SHALL BE DRILLED BELOW FOUNDATION WALL AND ENTER THE BUILDING THROUGH THE FLOOR. REINSTALL ANY BRICK WORK THAT WAS DISTURBED DURING INSTALLATION. REFER TO PIPING DIAGRAM FOR REQUIRED VALVES AND PIPE ROUTING.
4. PROVIDE NEW PUMPS AND TANKS. REFER TO PIPING DIAGRAM.
5. RECONNECT GROUND SOURCE WATER LOOP TO NEW PIPING LOOP. REFER TO PIPING DIAGRAM. IF EXISTING WALL OPENINGS NEED TO INCREASE TO FIT NEW PIPING, REMOVE BRICKS THAT HAD BEEN NEWLY ADD. DISCUSS WITH COR BEFORE MAKING PENETRATIONS.
6. BALANCE WATER AND AIR SYSTEM.

1/4"=1'-0" 4' 0 4 8

DESIGNED: ELS CADD ELS TECH. REVIEW: HACE DATE: 2/9/2026	SUB SHEET NO. M2.1	TITLE OF SHEET BASEMENT FLOOR PLAN REPLACE GEOTHERMAL SYSTEM MEMORIAL HOUSE GEORGE WASHINGTON BIRTHPLACE NATIONAL MONUMENT	DRAWING NO. 332 / 114081 PMIS/PKG NO. 305342 SHEET 8 OF 20

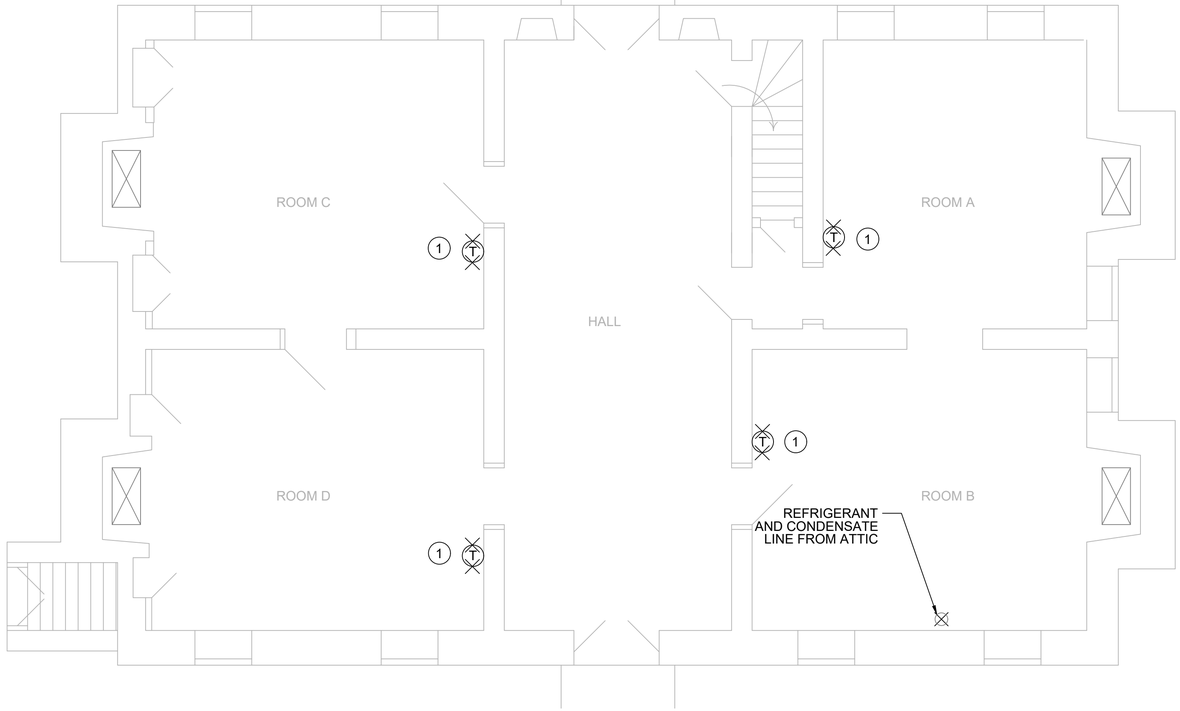

1 M2.2 DEMOLITION WORK
SCALE: 1/4" = 1'-0"

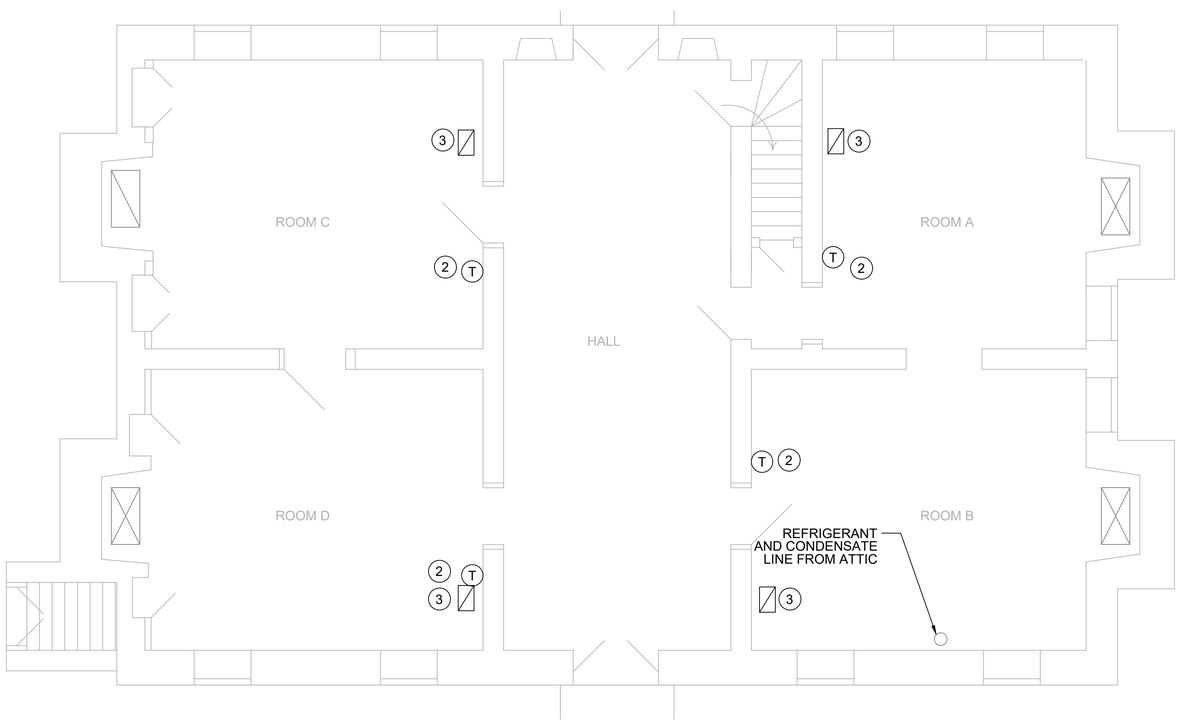

2 M2.2 NEW WORK
SCALE: 1/4" = 1'-0"

GENERAL NOTES:

1. THESE DRAWINGS ARE DIAGRAMMATIC IN NATURE AND NOT INTENDED TO SHOW ALL TRANSITIONS, OFFSETS, ETC. CONTRACTOR SHALL FIELD VERIFY EXISTING CONDITIONS AND PROVIDE ALL NECESSARY FITTINGS TO COMPLETE THE INTENT OF THE DRAWINGS. ANY DISCREPANCIES BETWEEN DRAWINGS AND FIELD CONDITIONS SHALL BE REPORTED TO THE CONTRACTING OFFICER FOR RESOLUTION. CONTRACTOR MAY LOCATE MECHANICAL EQUIPMENT DIFFERENTLY THAN SHOWN ON DRAWINGS DUE TO CONFLICTS, AS LONG AS FUNCTION AND/OR APPEARANCE ARE NOT AFFECTED.

SHEET NOTES:

1. DEMO EXISTING THERMOSTATS.
2. INSTALL NEW THERMOSTATS IN EXISTING LOCATION.
3. PROVIDE NEW RETURN DUCTWORK TO NEW FLOOR OPENING. CONNECT TO FLOOR GRILLES (GRILLES FURNISHED BY THE PARK). DO NOT REMOVE MORE FLOORING THAT NECESSARY TO INSTALL GRILLE.

1/4"=1'-0" 4' 0 4 8

DESIGNED: ELS CADD ELS TECH. REVIEW: HACE DATE: 2/9/2026	SUB SHEET NO. M2.2	TITLE OF SHEET FIRST FLOOR PLAN REPLACE GEOTHERMAL SYSTEM MEMORIAL HOUSE GEORGE WASHINGTON BIRTHPLACE NATIONAL MONUMENT	DRAWING NO. 332 / 114081 PMIS/PKG NO. 305342 SHEET 9 OF 20

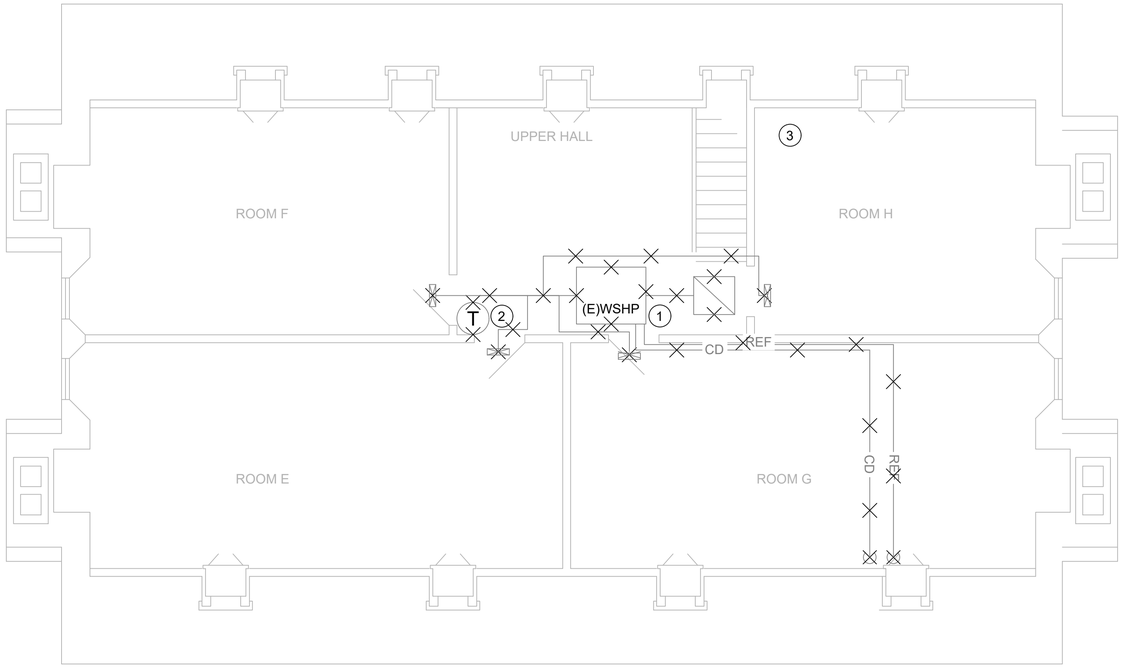

1 M2.3 DEMOLITION WORK
SCALE: 1/4" = 1'-0"

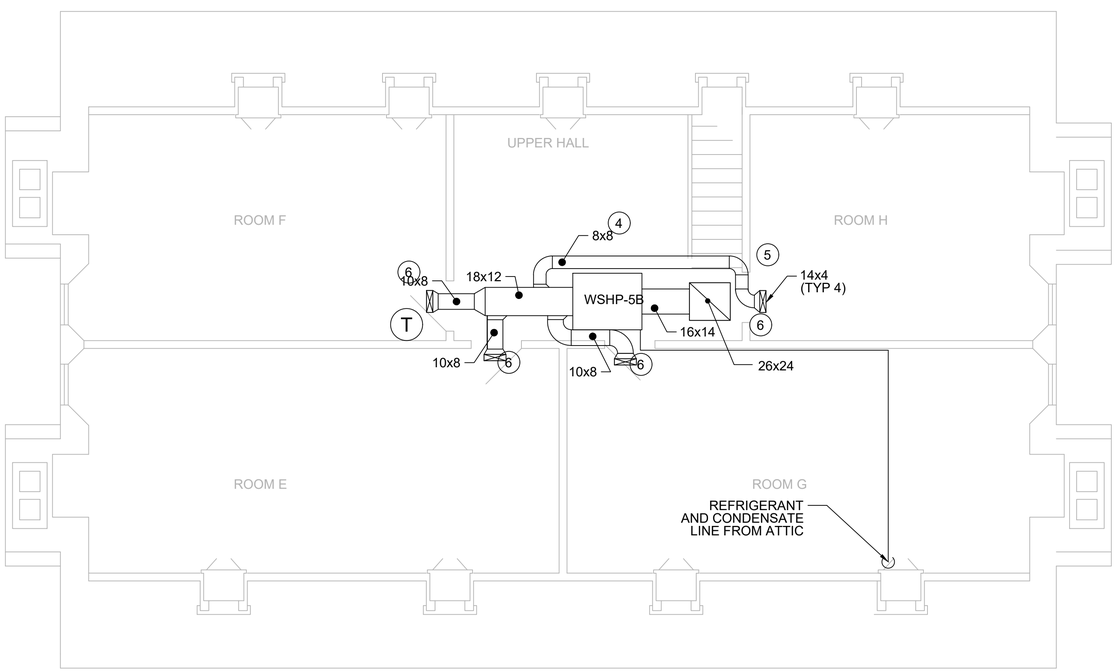

2 M2.3 NEW WORK
SCALE: 1/4" = 1'-0"

GENERAL NOTES:

1. THESE DRAWINGS ARE DIAGRAMMATIC IN NATURE AND NOT INTENDED TO SHOW ALL TRANSITIONS, OFFSETS, ETC. CONTRACTOR SHALL FIELD VERIFY EXISTING CONDITIONS AND PROVIDE ALL NECESSARY FITTINGS TO COMPLETE THE INTENT OF THE DRAWINGS. ANY DISCREPANCIES BETWEEN DRAWINGS AND FIELD CONDITIONS SHALL BE REPORTED TO THE CONTRACTING OFFICER FOR RESOLUTION. CONTRACTOR MAY LOCATE MECHANICAL EQUIPMENT DIFFERENTLY THAN SHOWN ON DRAWINGS DUE TO CONFLICTS, AS LONG AS FUNCTION AND/OR APPEARANCE ARE NOT AFFECTED.

SHEET NOTES:

1. DISCONNECT AND DEMOLISH WSHPs, ASSOCIATED REFRIGERANT PIPING, CONDENSATE, AND DUCTWORK. CEILING GRILLES SHALL REMAIN.
2. DEMO THERMOSTAT.
3. HATCH OPENING TO ATTIC IS 28"x26" ALL EQUIPMENT WILL NEED TO FIT THROUGH EXISTING OPENING.
4. PROVIDE NEW WSHP WITH A NEW DRAIN PAN. PROVIDE NEW DUCTWORK PER FLOOR PLAN. CONNECT DUCTWORK TO EXISTING CEILING GRILLES. PROVIDE REQUIRED PIPING AND VALVES, REFER TO PIPING DIAGRAM.
5. INSTALL NEW THERMOSTATS IN EXISTING LOCATION.
6. CLEAN ALL DIFFUSERS.
7. BALANCE WATER AND AIR SYSTEM.

1/4"=1'-0" 4' 0 4 8

DESIGNED: ELS CADD ELS TECH. REVIEW: HACE DATE: 2/9/2026	SUB SHEET NO. M2.3	TITLE OF SHEET SECOND FLOOR PLAN REPLACE GEOTHERMAL SYSTEM MEMORIAL HOUSE GEORGE WASHINGTON BIRTHPLACE NATIONAL MONUMENT	DRAWING NO. 332 / 114081 PMIS/PKG NO. 305342 SHEET 10 OF 20

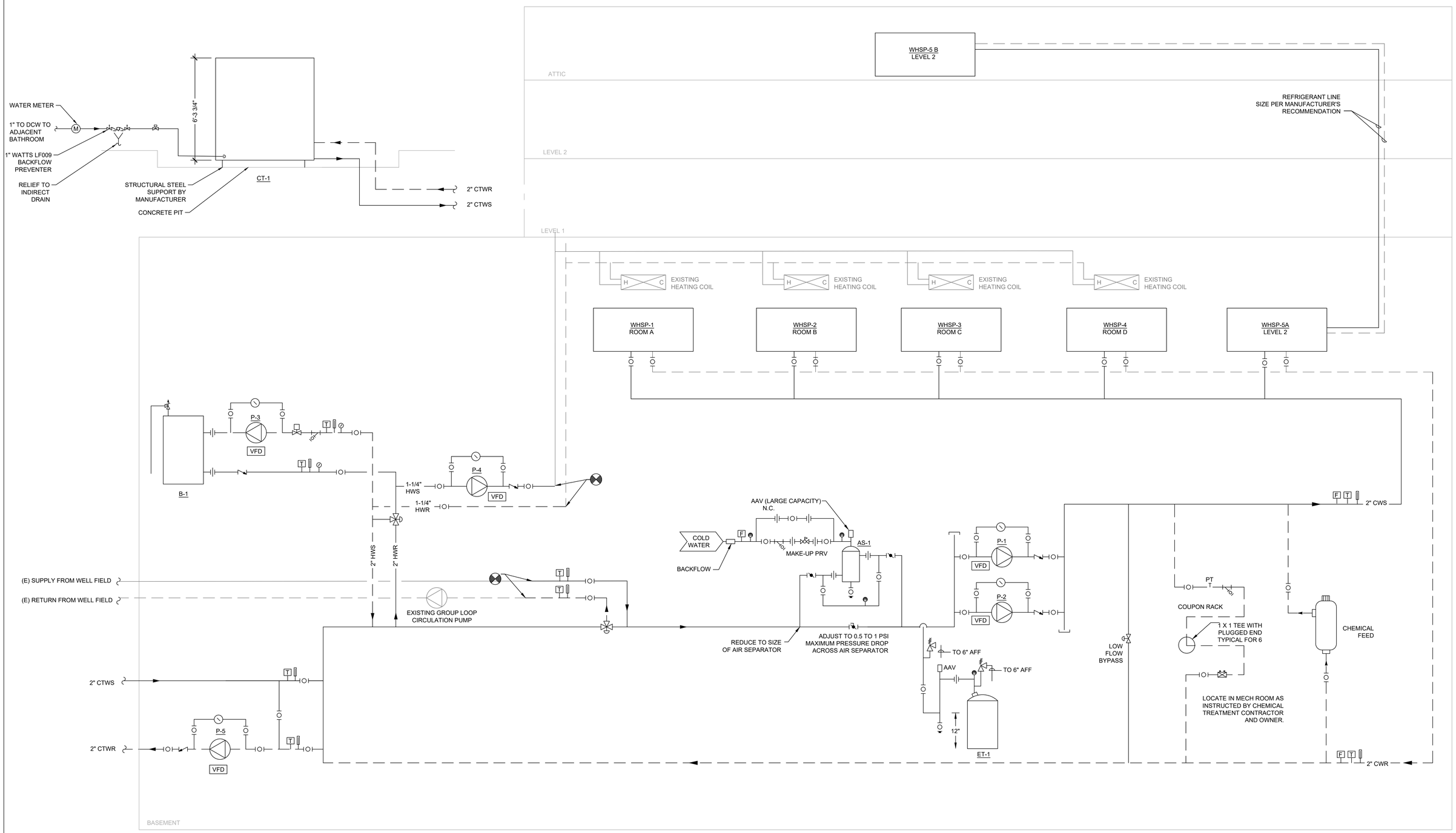

DESIGNED: ELS CADD ELS TECH. REVIEW: HACE DATE: 2/9/2026	SUB SHEET NO. M3.0	TITLE OF SHEET MECHANICAL FLOW DIAGRAM REPLACE GEOTHERMAL SYSTEM MEMORIAL HOUSE GEORGE WASHINGTON BIRTHPLACE NATIONAL MONUMENT	DRAWING NO. 332 / 114081 PMIS/PKG NO. 305342 SHEET 11 OF 20

COOLING TOWER SCHEDULE

UNIT NO.	LOCATION	TYPE	NO. OF CELLS	TON/CELL	NOMINAL TONS	HEAT REJECTION CAPACITY (MBH)	AMBIENT AIR TEMP °F (WB)	WATER TEMP (°F)		WATER FLOW RATE (GPM)	WATER PRESSURE DROP (FT WC)	FAN DATA									PUMP DATA				BASIN DATA (EACH HEATER)						OBERATING WEIGHT (LBS)	MANUFACTURER MODEL NUMBER (BASIS OF DESIGN)	NOTES
								INLET	OUTLET			AIR FLOW (CFM)	NO. OF FANS PER CELL	EXTERNAL STATIC PRESSURE (IN WC)	MOTOR DATA			ELECTRICAL			HP	ELECTRICAL SERVICE			NO. OF BASIN HEATERS	AMBIENT AIR TEMP °F (DB)	BASIN HEATER POWER (kW)	ELECTRICAL SERVICE					
															RPM	MAX BHP	HP	V	PH	HZ		V	PH	HZ				V	PH	HZ			
CT-1	GRADE	WATER	1	24	24	150	78	101	86	20	0.11	15430	1	–	-	5	5	240	1	60	0.33	240	1	60	1	0	3	240	1	60	4610	BAC VFL-024-12H	1-3

1. PROVIDE FAN VFD
2. PROVIDE FACTORY CONTROL PANEL (FRANKLIN CONTROLS CTP3R-BYP010-P2/3)
3. PROVIDE MANUFACTURE STEEL FRAME. REFER TO VIBRATION ISOLATION SPECIFICATION.

BOILER SCHEDULE

UNIT NO.	LOCATION	SERVICE	OUTPUT CAPACITY (MBH)	INPUT MAX (MBH)	MAX INLET PRESSURE LP "W.C.	MIN INLET PRESSURE LP "W.C.	WATER					AIR		ELECTRICAL SERVICE				WORKING PRESSURE (PSIG)	MANUFACTURER MODEL NUMBER (BASIS OF DESIGN)	NOTES
							GPM	EWT (°F)	LWT (°F)	MAX PD (FT)	% GLYCOL	AIR INLET	VENT SIZE	FLA	V	PH	HZ			
B-1	MECH RM	WSHP	146	175	14	11	30	140	110	2.2	0	-	6	12	120	1	60	50	BURNHAM X-206LP	1

1. PROVIDE WITH PROPANE CONVERSION KIT

PUMP SCHEDULE

UNIT NO.	LOCATION	SERVICE	PUMP STYLE/TYPE	PUMP DATA						FLUID DATA			MOTOR DATA							WORKING PRESSURE (PSIG)	MANUFACTURER MODEL NUMBER (BASIS OF DESIGN)	NOTES
				WATER FLOW RATE (GPM)	HEAD PRESURE (FT WC)	NPSHR (FT WC)	SHUT-OFF HEAD PRESSURE (FT WC)	PUMP SPEED (RPM)	IMPELLER SIZE (INCHES)	FLUID TEMP (°F)	FLUID TYPE	% GLYCOL	MOTOR SPEED (RPM)	BHP	HP	DRIVE TYPE	ELECTRICAL SERVICE					
																	V	PH	HZ			
P-1	BASEMENT	CONDENSER WATER LOOP	INLINE	15	10	2.67	10.3	1396	4	95	WATER	0	1800	0.064	0.25	VFD	115/208-230	1	60	175	BELL & GOSSITT E-90	1
P-2	BASEMENT	CONDENSER WATER LOOP	INLINE	15	10	2.67	10.3	1396	4	95	WATER	0	1800	0.064	0.25	VFD	115/208-230	1	60	175	BELL & GOSSITT E-90	1
P-3	BASEMENT	BOILERS	INLINE	30	8	2.83	10.2	1387	4	180	WATER	0	1800	0.094	0.25	VFD	115/208-230	1	60	175	BELL & GOSSITT E-90	1
P-4	BASEMENT	HOT WATER COILS	INLINE	10	7		8.85	1200	4.125	180	WATER	0	3600		2	VFD	115/208-230	1	60	175	BELL & GOSSITT E-90E	1
P-5	BASEMENT	COOLING TOWER	INLINE	20	10	2.78	10.7	1423	4	95	WATER	0	1800	0.080	0.25	VFD	115/208-230	1	60	175	BELL & GOSSITT E-90	1

1. PROVIDE DISCONNECT SWITCH

WATER SOURCE HEAT PUMP SCHEDULE

UNIT NO.	LOCATION	SERVICE	NOM. TON	ORIENTATION	REFRIG.	CFM	BLOWER HP	COMPRESSOR QTY	AIR EXTERNAL STATIC PRESSURE (IN WC)	WATER FLOW RATE (GPM)	WATER PRESSURE DROP (FT WC)	COOLING						HEATING				ELECTRICAL SERVICE					WEIGHT (LBS)	DIMENSIONS (WxDxH)	MANUFACTURER MODEL NUMBER (BASIS OF DESIGN)	NOTES
												EWT (°F)	LWT (°F)	EAT (°F)	TC (MBH)	SC (MBH)	EER	EWT (°F)	LWT (°F)	EAT (°F)	HC (MBH)	V	PH	HZ	FLA	MCA				
WSHP-1	BASEMENT	ROOM A	1.5	VERTICAL	R-454B	500	1/3	1	0.72	3.5	11.9	86	101	76/63.4	15.4	11.8	13.6	63	53	70	16.6	208-230	1	60	8.6	10.1	146	21.5"x21.5"x33"	BOSCH CL015	1-4
WSHP-2	BASEMENT	ROOM B	1.5	VERTICAL	R-454B	500	1/3	1	0.72	3.5	11.9	86	101	76/63.4	15.4	11.8	13.6	63	53	70	16.6	208-230	1	60	8.6	10.1	146	21.5"x21.5"x33"	BOSCH CL015	1-4
WSHP-3	BASEMENT	ROOM C	1.5	VERTICAL	R-454B	500	1/3	1	0.72	3.5	11.9	86	101	76/63.4	15.4	11.8	13.6	63	53	70	16.6	208-230	1	60	8.6	10.1	146	21.5"x21.5"x33"	BOSCH CL015	1-4
WSHP-4	BASEMENT	ROOM D	1.5	VERTICAL	R-454B	500	1/3	1	0.72	3.5	11.9	86	101	76/63.4	15.4	11.8	13.6	63	53	70	16.6	208-230	1	60	8.6	10.1	146	21.5"x21.5"x33"	BOSCH CL015	1-4
WSHP-5A	BASEMENT	LEVEL 2	3	VERTICAL - COMPRESSOR	R-454B	-	1/3	1	0.5	6.75	1.7	86	101	76/63.4	39.1	23.2	17.1	63	53	70	36.6	208-230	1	60	14.6	18.2	166	24"x26"x22"	BOSCH CP036	1-4
WSHP-5B	ATTIC	LEVEL 2	3	HORIZONTAL - BLOWER	R-454B	1150	1/2	-	0.5	-	-	86	101	76/63.4	39.1	23.2	17.1	63	53	70	36.6	208-230	1	60	3.3	4.2	121	22"×20"×47"	BOSCH BIVA -36RCB	1-4

1. PROVIDE DRAIN PAN AND CONDENSATE PUMP (AS REQUIRED, IF DRAINING BY GRAVITY IS NOT FEASIBLE - BLUE DIAMOND MODEL MAXIBLUE, 23FT HEAD, 16.5 SUCTION LIFT, 208-230V).
2. PROVIDE HOSE KIT WITH ISOLATION VALVES, A STRAINER, BLOW DOWN VALVE, AND AUTO BALANCING VALVE
3. PROVIDE MANUFACTURE THERMOSTAT
4. COORDINATE SUPPLY AIR AND RETURN AIR DUCT CONNECTION ARRANGEMENT AND LEFT-/RIGHT-HAND MODEL TO MATCH LAYOUT SHOWN ON FLOOR PLAN FOR EACH APPLICATION PRIOR TO ORDERING.

SIDE STREAM FILTER SCHEDULE

UNIT NO.	LOCATION	SERVICE	FLOW RATE (GPM)	ELEC. DATA			MANUFACTURER MODEL NUMBER (BASIS OF DESIGN)	NOTES
				V	PH	HZ		
SSF-1	COOLING TOWER	COOLING TOWER WATER	3	120	1	60	LAKOS ILB-0037	1-2

1. ABV AUTOMATIC PURGE SYSTEM WITH BRASS 3/4" VALVE WITH REMOTE CONTROLLER 120-240V
2. SIZED FOR 15% FLOW OF THE CONDENSER WATER DESIGN FLOW (3 GPM)

AIR SEPARATOR SCHEDULE

UNIT NO.	LOCATION	SERVICE	FLOW RATE (GPM)	PRESSURE DROP (FT WC)	SIZE DIA Ø" x H" (INCHES)	CONNECTION SIZE		OPERATING WEIGHT (LBS)	MANUFACTURER MODEL NUMBER (BASIS OF DESIGN)	NOTES
						INLET (INCH)	OUTLET (INCH)			
AS-1	MECH RM	CONDENSER WATER	20	0.5	6-7/16"x12-3/16"	1	1	8.8	BELL & GOSSETT EAS-1	1

1. BUILT IN STRAINER REQUIRED.

EXPANSION TANK SCHEDULE

UNIT NO.	LOCATION	SERVICE	SYSTEM TEMP (°F)		SYSTEM PRESSURE AT TANK LOCATION (PSIG)		TANK PRESSURE RATING (PSI)	TANK AIR CHARGE (PSIG)	TANK AACCEPTANCE VOLUME (GAL)	MANUFACTURER MODEL NUMBER (BASIS OF DESIGN)	NOTES
			MIN	MAX	MIN	MAX					
ET-1	MECH RM	CONDENSER WATER	40	150	10	60	30	15	6.3	BELL & GOSSETT D-15	1

1. ASME EXPANSION TANK WITH REPLACEABLE FULL ACCEPTANCE BLADDER

DESIGNED: ELS CADD ELS TECH. REVIEW: HACE DATE: 2/9/2026	SUB SHEET NO. M4.0	TITLE OF SHEET MECHANICAL SCHEDULE REPLACE GEOTHERMAL SYSTEM MEMORIAL HOUSE GEORGE WASHINGTON BIRTHPLACE NATIONAL MONUMENT	DRAWING NO. 332 / 114081 PMIS/PKG NO. 305342 SHEET 12 OF 20

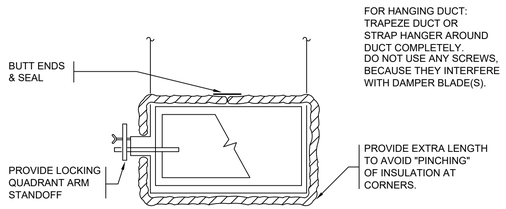

4 TYPICAL DUCT INSULATION & SUPPORTS NEAR VOLUME DAMPERS

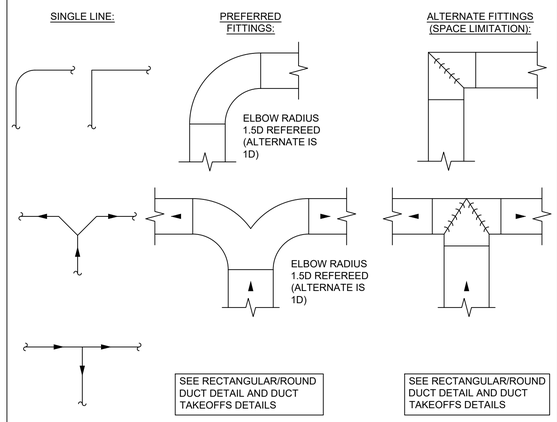

3 PIPE ANCHOR DETAIL STRUCTURAL STEEL

SCALE: NTS

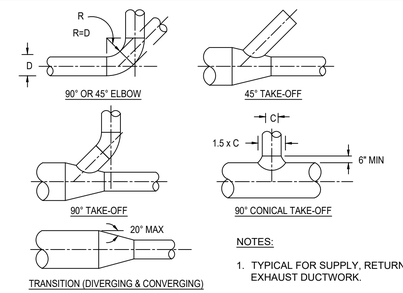

NOTES:

1. TYPICAL FOR SUPPLY, RETURN, AND EXHAUST DUCTWORK.
2. WHERE DUCT SIZE CHANGE OCCURS, TRANSITION MAY NOT BE SHOWN ON PLANS.

2 ROUND DUCT FITTING DETAIL

SCALE:

NOTES:

1. TYPICAL FOR SUPPLY, RETURN, AND EXHAUST DUCTWORK.
2. LOCATE THE CENTER OF TAKE-OFFS FROM DUCT MAINS AT THE MIDPOINT OF THE SIDE OF DUCT MAIN ("HEIGHT"/2)
3. SIZE A & B DIMENSIONS ARE PROPORTIONAL TO AIR QUANTITIES IN EACH LEG SPLIT.
4. WHERE DUCT SIZE CHANGE OCCURS, TRANSITION MAY NOT BE SHOWN ON PLANS.
5. IF W2 DOES NOT EQUAL W1, MODIFY SHAPE OF VANE EDGES TO PROJECT TANGENT PARALLEL TO DUCT SIDES.

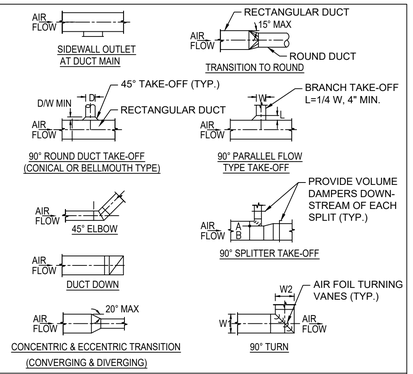

1 RECTANGULAR DUCT FITTING DETAIL

SCALE:

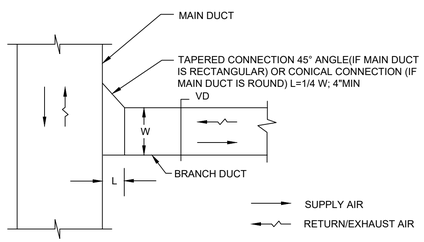

8 LOW PRESSURE BRANCH TAKE-OFFS

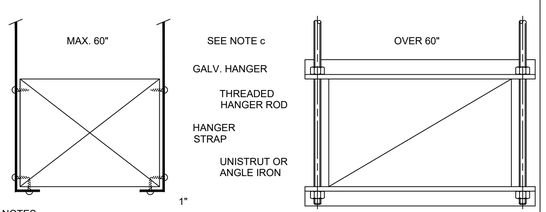

NOTES:

1. ON DUCTS OVER 48" WIDE, BOTTOM SHALL BE BRACED BY ANGLE. FOR CROSS SECTION AREA MORE THAN 8 SQ FT, DUCT SHALL BE BRACED BY ANGLES ON ALL FOUR SIDES.
2. CUTTING AND PATCHING SHALL BE LIMITED TO A MINIMUM AS REQUIRED FOR PROPER INSTALLATION.
3. SUPPORTS SHALL BE SPACED AND SIZED AS PER SMACNA.

9 DUCT HANGER SUPPORT

SCALE:

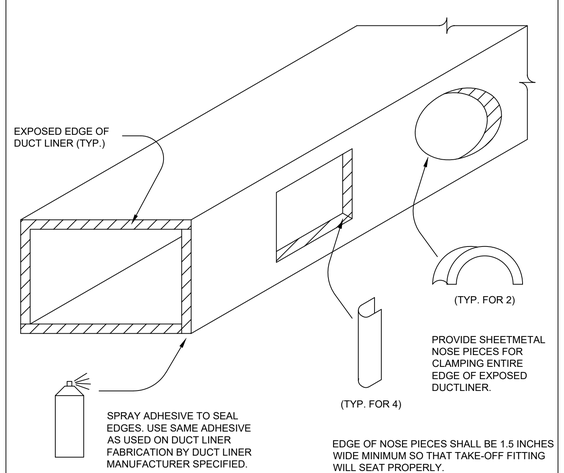

7 SEALING AND SECURING EXPOSED DUCTLINER

RADIUS ELBOW AND SPLITTER VANE REQUIREMENTS

r/w RATIO:	NO. OF VANES FOR 1 ELBOW:	NO. OF VANES WHEN 2 ELBOWS ARE WITHIN 2 EQUIV. DIA.:	
r/w >= 1.50	0	0	1
1.5 > r/w >= 0.70	1	1	2
0.7 > r/w >= 0.60	2	2	3
0.6 > r/w >= 0.55	3	3	3

EQUIVALENT DIAMETER = (w+h)/2

NOTE: r/w = 0.5 IS A SQUARE THROAT ELBOW! HOWEVER, MINIMUM INSIDE RADIUS R SHOULD BE 2".

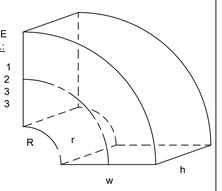

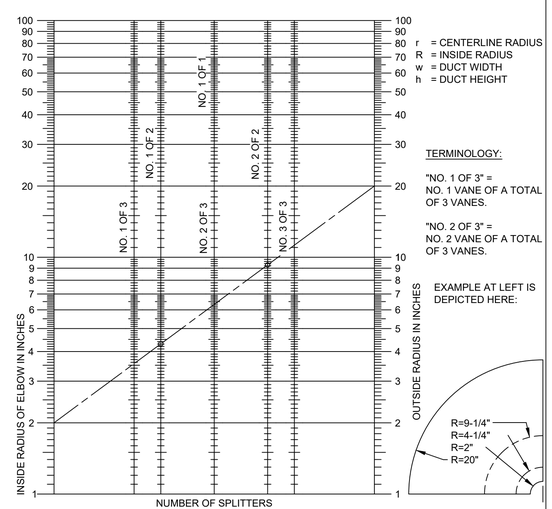

6 SHORT RADIUS ELBOW SPLITTER VANE QUANTITY AND SPACING

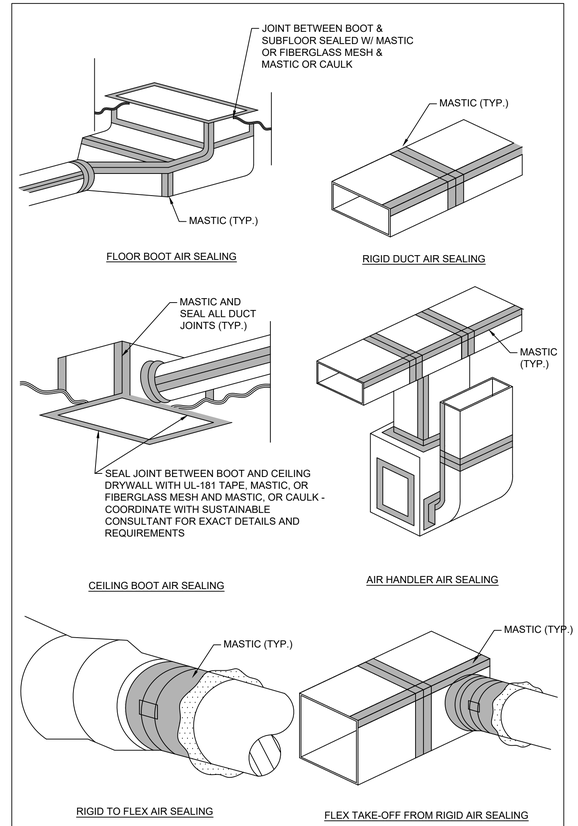

5 DUCT SEALING DETAIL

SCALE:

DESIGNED: ELS	SUB SHEET NO.	TITLE OF SHEET	DRAWING NO.
CADD ELS	M5.0	MECHANICAL DETAILS	332 / 114081
TECH. REVIEW: HACE		REPLACE GEOTHERMAL SYSTEM	PMIS/PKG NO. 305342
DATE: 2/9/2026		MEMORIAL HOUSE	SHEET 13 OF 20
		GEORGE WASHINGTON BIRTHPLACE NATIONAL MONUMENT	

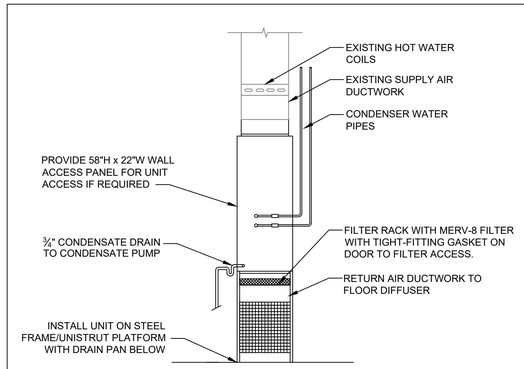

2 TYPICAL VERTICAL DUCTED WSHP DETAIL

SCALE:

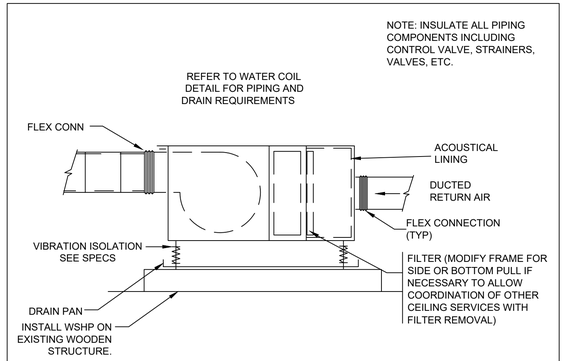

5 TYPICAL HORIZONTAL DUCTED WSHP DETAIL

SCALE:

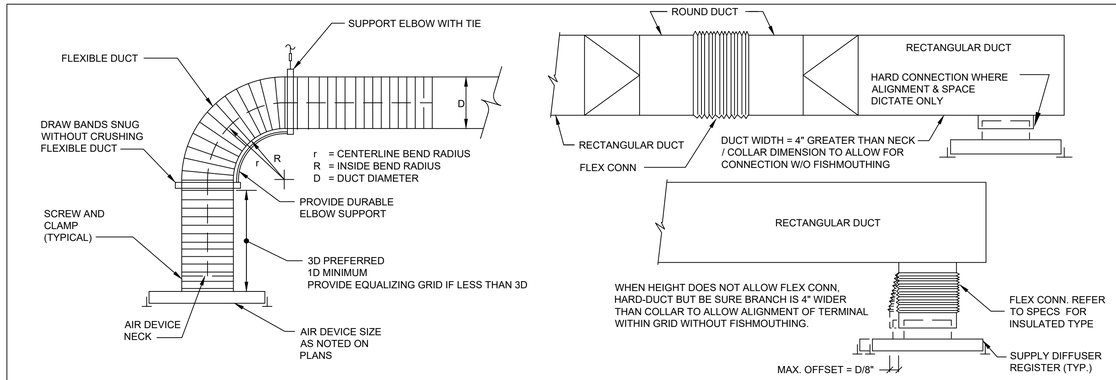

NOTES:
1. DETAIL ALLOWS DUCTWORK TO BE INSTALLED BEFORE CEILING GRID THEN ALLOWS DIFFUSERS AND REGISTERS TO BE POSITIONED INTO GRID.
2. PROVIDE INSULATED TRANSITION ROUND TO SQUARE INLET DIFFUSERS.
3. SECURE FLEXIBLE DUCT TO METAL DUCT WITH (2) STAINLESS STEEL CLAMPS OR NYLON TY-WRAPS TO INDIVIDUALLY SECURE FLEXIBLE DUCT INNER SLEEVE AND OUTER SLEEVE. WHEN INSTALLED ON INSULATED SYSTEM SEAL INSULATION JOINT WITH VAPOR BARRIER MASTIC. PROVIDE NYLON TY-WRAP TOOL OR REUSABLE SS DRAW BANDS.
4. PROVIDE DUCT MOUNTED VOLUME DAMPER. AVOID NECK DAMPERS.
5. FLEXIBLE DUCTS SHALL BEND IN ONE DIRECTION ONLY WITH A MAXIMUM CHANGE IN DIFFERENCE OF 90 DEGREES.
6. UNLESS SHOWN OTHERWISE FLEXIBLE DUCT SIZE AND COLLAR OF TAP OFF SHALL BE SAME SIZE AS DIFFUSER NECK.
7. IF RUN-OUT LENGTH REQUIRES SEGMENT OF HARD DUCT, SIZE SHALL BE SAME AS DIFFUSER NECK. RUN-OUT TO DIFFUSER SHALL BE AS STRAIGHT AS POSSIBLE.
8. INSTALL BENDS IN FLEXIBLE DUCTS WITH A MINIMUM CENTERLINE RADIUS EQUAL TO 1.5 DUCT DIAMETERS (r >= 1.5 x D).
9. DO NOT EXCEED 6'-0" MAXIMUM LENGTH OF FLEX DUCT RECOMMENDED IN THE 2017 ASHRAE FUNDAMENTALS HANDBOOK. INSTALL FLEX DUCT WITH NO MORE THAN 1/2" SAG PER FOOT.

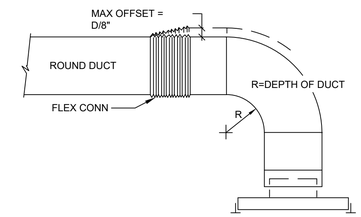

1 DIFFUSER/REGISTER DUCTWORK CONNECTIONS

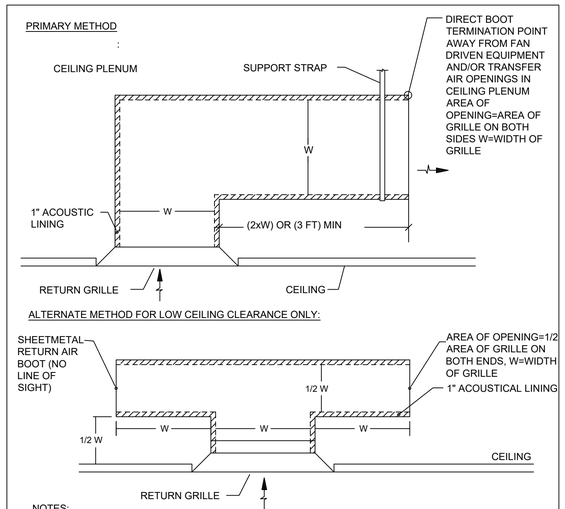

NOTES:
1. CONTRACTOR SHALL INSTALL RETURN AIR BOOTS FOR ALL PLENUN RETURN AIR GRILLES UNLESS NOTED OTHER WISE.
2. IF SPACE DOES NOT PERMIT FOR BOOT AS DETAILED ABOVE, THE CONTRACTOR SHALL SUBMIT ALTERNATE DESIGN SUGGESTION(S) FOR APPROVAL, MAINTAINING NO LINE OF SIGHT BETWEEN THE CEILING GRILLE OPENING AND THE OPEN END OF THE RETURN BOOT.
3. BOOT SHALL BE POSTIIONED SUCH THAT THE OPEN END IS PERPENDICULAR WITH ANY FULL HEIGHT WALL TRANSFER OPENINGS OR TRANSFER DUCT OPENINGS.

4 RETURN AIR GRILLE WITH SOUND ATTENUATION BOOT

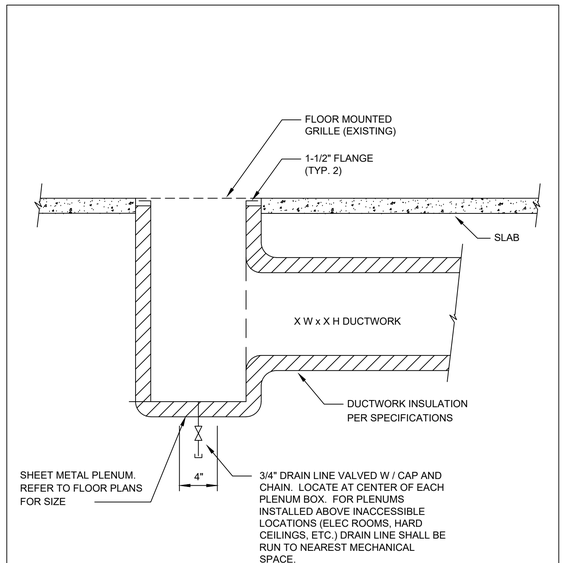

3 FLOOR DIFFUSER PLENUM DETAIL

SCALE: NTS

DESIGNED: ELS CADD ELS TECH. REVIEW: HACE DATE: 2/9/2026	SUB SHEET NO. M5.1	TITLE OF SHEET MECHANICAL DETAILS REPLACE GEOTHERMAL SYSTEM MEMORIAL HOUSE GEORGE WASHINGTON BIRTHPLACE NATIONAL MONUMENT	DRAWING NO. 332 / 114081 PMIS/PKG NO. 305342 SHEET 14 OF 20

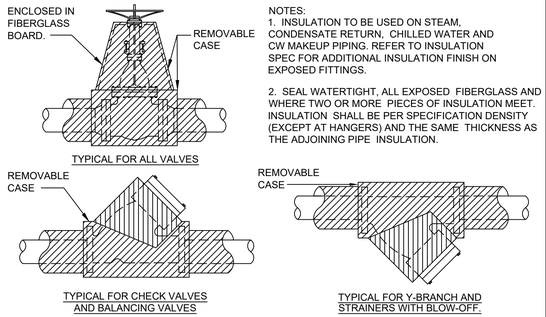

NOTES:
1. INSULATION TO BE USED ON STEAM, CONDENSATE RETURN, CHILLED WATER AND CW MAKEUP PIPING. REFER TO INSULATION SPEC FOR ADDITIONAL INSULATION FINISH ON EXPOSED FITTINGS.

2. SEAL WATERTIGHT, ALL EXPOSED FIBERGLASS AND WHERE TWO OR MORE PIECES OF INSULATION MEET. INSULATION SHALL BE PER SPECIFICATION DENSITY (EXCEPT AT HANGERS) AND THE SAME THICKNESS AS THE ADJOINING PIPE INSULATION.

4 VALVE & STRAINER INSULATION DETAIL

SCALE:

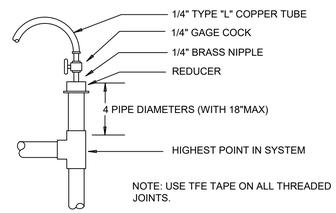

NOTE: USE TFE TAPE ON ALL THREADED JOINTS.

3 MANUAL AIR VENT ASSEMBLY

SCALE:

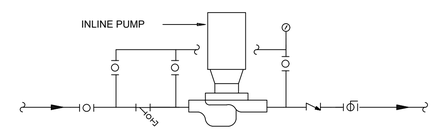

2 INLINE PUMP PIPING (EACH PUMP)

SCALE:

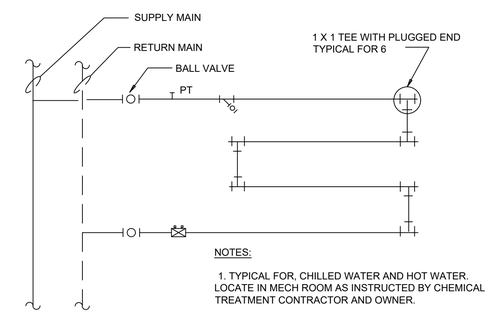

NOTES:

1. TYPICAL FOR, CHILLED WATER AND HOT WATER. LOCATE IN MECH ROOM AS INSTRUCTED BY CHEMICAL TREATMENT CONTRACTOR AND OWNER.

1 COUPON RACK

SCALE:

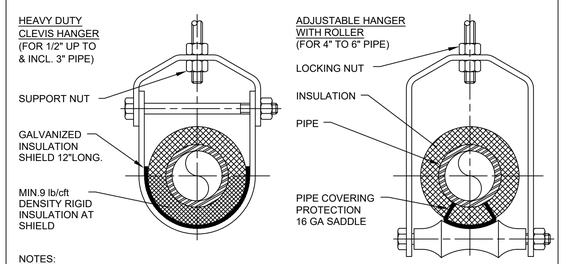

NOTES:
1. SEE SPECIFICATION FOR HANGER SIZES.
2. PIPE 8" AND LARGER SHALL HAVE ROLLER SUPPORTED WITH DUAL RODS.
3. FOR CHW SERVICE OVER 3" REPLACE SADDLE WITH 12" LONG 14 GA SHIELD WITH RIGID INSULATION BETWEEN PIPE AND SHIELD.

8 PIPE HANGER SUPPORT

SCALE:

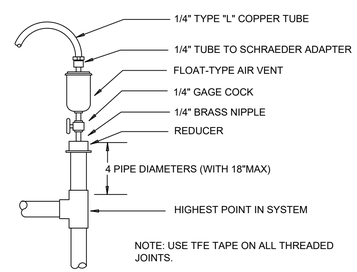

NOTE: USE TFE TAPE ON ALL THREADED JOINTS.

7 AUTOMATIC AIR VENT ASSEMBLY

SCALE:

BILL OF MATERIALS

ITEM	MATERIAL	QTY	PROVIDED BY
1	1/2"MNPTx1/2"T SS CONN. COMPRESSION TYPE	6	INSTALLER
2	1/2"ODx0.035 316SS SMLS TUBE	A/R	INSTALLER
3	1/2"Tx1/2"Tx1/2"T TEE SS COMPRESSION TYPE	2	INSTALLER
4	1/2" 3 VALVE MANIFOLD SS	1	INSTALLER
5	1/2" BALL VALVE SS, 2000#	4	INSTALLER
6	1/2"MNPT PLUG SS	2	INSTALLER
7	1/2" TUBE UNION SS COMPRESSION TYPE	A/R	INSTALLER

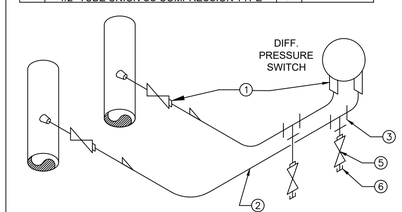

NOTES:
1. SLOPE 1" PER FT DOWN TO INSTRUMENT
2. TUBING ROUTING SHALL AVOID HIGH TEMPERATURE SWIRLS. TUBING AND SUPPORTS SHALL INCLUDE PROVISIONS FOR THERMAL EXPANSION.
3. FOR STAND DETAIL SEE DWG. NO. FOR MOUNTING DETAIL SEE DWG. NO.
4. TUBING SHALL BE SUPPORTED EVERY 5'-0" WITH MILL GALVANIZED STRUT & STAINLESS STEEL TUBING CLAMPS.
5. IF UNABLE TO SUPPORT TUBING EVERY 5'-0", INSTRUMENT TUBE TRAY IS TO BE USED WITH THE APPROPRIATE TUBING CLAMPS.

6 DIFFERENTIAL PRESSURE SWITCH

SCALE:

CLOSED WATER SYSTEM PIPING SIZING CHART

FLOW (GPM)	PIPING SIZE (INCHES)
0 - 3.0	3/4
3.0 - 6.5	1
6.5 - 12	1-1/4
12 - 20	1-1/2
20 - 40	2
40 - 65	2-1/2
65 - 115	3
115 - 240	4

NOTE:
- MINIMUM PIPE SIZES UNLESS LARGER SIZES ARE INDICATED ON DRAWINGS.

5 CLOSED WATER SYSTEM PIPING SIZING CHART

SCALE:

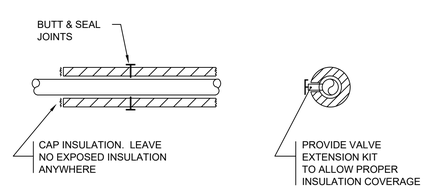

10 TYPICAL PIPE INSULATION & VALVE HANDLE EXTENSION

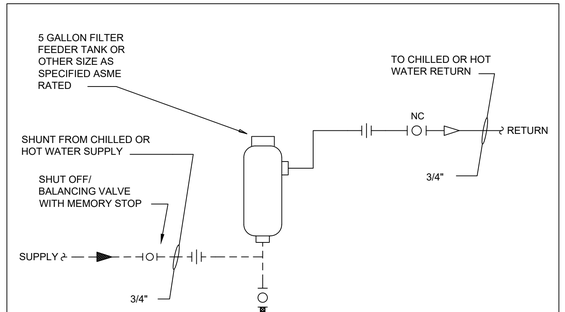

9 CHEMICAL FEED (FILTER FEEDER)

SCALE:

DESIGNED: ELS CADD ELS TECH. REVIEW: HACE DATE: 2/9/2026	SUB SHEET NO. M5.2	TITLE OF SHEET MECHANICAL DETAILS REPLACE GEOTHERMAL SYSTEM MEMORIAL HOUSE GEORGE WASHINGTON BIRTHPLACE NATIONAL MONUMENT	DRAWING NO. 332 / 114081 PMIS/PKG NO. 305342 SHEET 15 OF 20

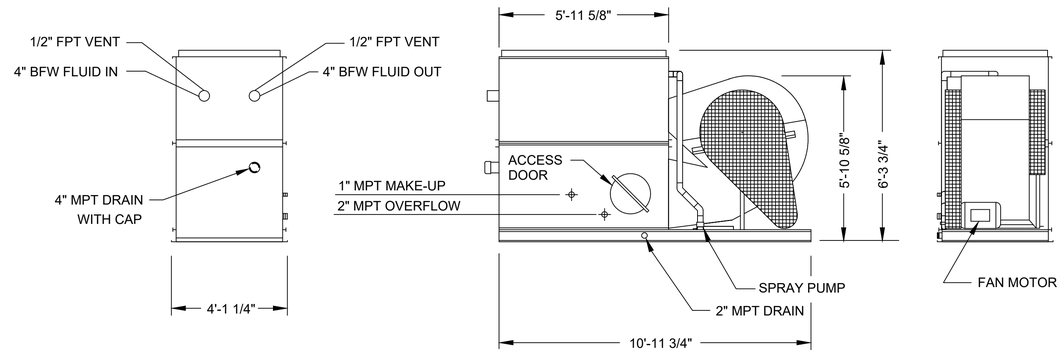

1 COOLING TOWER DETAIL

SCALE: NTS

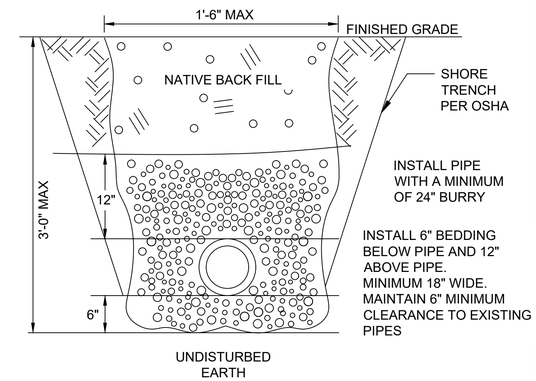

1 TRENCH

SCALE:

DESIGNED: ELS CADD ELS TECH. REVIEW: HACE DATE: 2/9/2026	SUB SHEET NO. M5.3	TITLE OF SHEET MECHANICAL DETAILS REPLACE GEOTHERMAL SYSTEM MEMORIAL HOUSE GEORGE WASHINGTON BIRTHPLACE NATIONAL MONUMENT	DRAWING NO. 332 / 114081 PMIS/PKG NO. 305342 SHEET 16 OF 20

GENERAL NOTES

1. DRAWINGS ARE CONCEPTUAL AND ARE INTENDED TO SHOW GENERAL SYSTEM CONFIGURATION AND PERFORMANCE. NOT ALL NECESSARY DEVICES AND COMPONENTS ARE SHOWN. PROVIDE ALL DEVICES AND COMPONENTS FOR A FULLY FUNCTIONAL SYSTEM.
2. CONTRACT DRAWINGS AND SPECIFICATIONS ARE COMPLEMENTARY AND MUST BE USED IN CONJUNCTION TO OBTAIN COMPLETE CONSTRUCTION INFORMATION. CONTRACTOR SHALL COORDINATE ALL DRAWINGS AND SPECIFICATIONS PRIOR TO COMMENCING WORK. QUESTIONS REGARDING DESIGN INTENT OR SYSTEM OPERATION SHALL BE PROMPTLY BROUGHT TO ATTENTION OF THE COR.
3. INSTALL DEVICES AND SYSTEM WIRING TO AVOID DISTURBANCE TO HISTORIC FABRIC AND TO AVOID VISUAL INTRUSION INTO PUBLIC VISITATION AREAS. HISTORIC PRESERVATION SHALL BE TAKEN INTO ACCOUNT THROUGHOUT THE PROJECT.
4. USE EXISTING ROUTING FOR NEW FEEDERS AND BRANCH CIRCUITS WHENEVER POSSIBLE. IF A PATH IS FOUND TO BE UNTENABLE, CONFIRM NEW ROUTING WITH THE COR. WIRING SHALL BE INSTALLED WITHIN CONDUIT WHERE EXISTING PATHS INCLUDE CONDUIT.
5. USE EXISTING HOLES AND OPENINGS TO INSTALL CONDUIT AND CABLE. WHERE NO USABLE PATH EXISTS, CUT NEW HOLES. COORDINATE SIZE AND LOCATIONS OF DRILLED HOLES AND CUT OPENINGS WITH THE COR.
6. IT IS RECOMMENDED THAT THE CONTRACTOR VISIT AND BECOME FAMILIAR WITH THE SITE PRIOR TO SUBMITTING BID.
7. THE TERM "REMOVE" MEANS DISCONNECT AND REMOVE THE DEVICE INCLUDING OUTLETS, BRANCH CIRCUIT WIRING AND RACEWAY.
8. THE TERM “PROVIDE” MEANS FURNISH AND INSTALL, COMPLETE AND READY FOR USE.
9. THE TERM “CONTRACT DOCUMENTS” MEANS THE PROJECT MANUAL, DRAWINGS, ADDENDA, SKETCHES AND OTHER DOCUMENTATION THAT DEFINE THE WORK.
10. ANY CONFLICTS BETWEEN SPECIFICATIONS AND DRAWINGS SHALL BE PROMPTLY BROUGHT TO COR'S ATTENTION. THE CONTRACTOR SHALL NOT PROCEED WITH ANY WORK EXCEPT AT THEIR OWN RISK, UNTIL CLARIFICATIONS OF CONFLICTS ARE ISSUED TO THE CONTRACTORS BY THE COR.
11. WHERE DEVICES, WIRING, MOLDING, ETC. ARE TO BE REMOVED FROM EXISTING HISTORIC FABRIC AND REMOVAL MAY NOT BE POSSIBLE WITHOUT DAMAGING EXISTING HISTORIC FABRIC, NOTIFY COR PRIOR TO THE REMOVAL OF THE ITEM.
12. PROVIDE ENGRAVED, PHENOLIC NAMEPLATE PANELS, SAFETY SWITCHES, CABINETS, ETC, TO IDENTIFY THE UNIT AND THE SOURCE PANEL AND CIRCUIT NUMBER.
13. ALL ELECTRICAL MATERIALS SHALL BE TEMPERATURE RATED FOR 90°C.

DESIGN ASSIST NOTES

1. ELECTRICAL WORK RELATED TO MECHANICAL SYSTEMS SHALL BE PROVIDED USING A DESIGN-ASSIST APPROACH. ELECTRICAL CONTRACTOR SHALL PREPARE FINAL ELECTRICAL DESIGN DOCUMENTS BASED ON MECHANICAL EQUIPMENT REQUIREMENTS, FIELD CONDITIONS, AND APPLICABLE CODES. FINAL DESIGN SHALL BE SUBMITTED FOR ENGINEER AND OWNER REVIEW PRIOR TO INSTALLATION. DRAWINGS INDICATE GENERAL INTENT ONLY AND DO NOT REPRESENT A COMPLETE ELECTRICAL DESIGN.
2. CONTRACTOR SHALL VERIFY EXISTING ELECTRICAL CAPACITY AND INFRASTRUCTURE AND NOTIFY THE ENGINEER OF ANY DISCREPANCIES PRIOR TO PROCEEDING WITH FINAL DESIGN.
3. ELECTRICAL CONTRACTOR SHALL COORDINATE POWER AND CONTROL WIRING REQUIREMENTS WITH THE MECHANICAL CONTROLS CONTRACTOR AND EQUIPMENT MANUFACTURERS.
4. CONTRACTOR SHALL VERIFY ALL MECHANICAL EQUIPMENT ELECTRICAL CHARACTERISTICS, INCLUDING VOLTAGE, PHASE, MCA, MOCP, AND CONTROL REQUIREMENTS PRIOR TO FINAL DESIGN.

DESIGNED: ELS CADD ELS TECH. REVIEW: HACE DATE: 2/9/2026	SUB SHEET NO. E0.1	TITLE OF SHEET ELECTRICAL GENERAL NOTES REPLACE GEOTHERMAL SYSTEM MEMORIAL HOUSE GEORGE WASHINGTON BIRTHPLACE NATIONAL MONUMENT	DRAWING NO. 332 / 114081 PMIS/PKG NO. 305342 SHEET 17 OF 20

1 E1.0 SITE PLAN
SCALE: 1/16" = 1'-0"

SHEET NOTES

1. NEW COOLING TOWER (CT-1): 208V,1Ø, FURNISHED AND SET-IN-PLACE BY ANOTHER CONTRACTOR. THIS CONTRACTOR SHALL PROVIDE BRANCH CIRCUITS WIRING TO NEMA 3R SAFETY SWITCHES AND POWER WIRING IN LFMC TO CT.
2. NEW COOLING TOWER PUMP. FURNISHED AND SET-IN-PLACE BY ANOTHER CONTRACTOR. THIS CONTRACTOR SHALL PROVIDE BRANCH CIRCUITS WIRING.
3. NEW HEAT BASIN, FURNISHED AND SET-IN-PLACE BY ANOTHER CONTRACTOR. THIS CONTRACTOR SHALL PROVIDE BRANCH CIRCUITS WIRING.
4. NEW CONTROL PANEL, FURNISHED AND SET-IN-PLACE BY ANOTHER CONTRACTOR. THIS CONTRACTOR SHALL PROVIDE BRANCH CIRCUITS WIRING.
5. NEW SIDE STREAM FILTER: 120V, 1Ø; FURNISHED AND SET-IN-PLACE BY ANOTHER CONTRACTOR. THIS CONTRACTOR SHALL PROVIDE BRANCH CIRCUITS WIRING.
6. EXISTING PANEL MDP: PROVIDE NEW CIRCUIT BREAKERS FOR ALL REPLACEMENT & NEW EQUIPMENT. PROVIDE NEW COVER DOOR WITH NAMEPLATE ON THE COVER TO IDENTIFY THE PANEL & ELECTRICAL CHARACTERISTICS.
7. PROVIDE NEW WALL MOUNTED VARIABLE FREQUENCY DRIVES HAVING THE CHARACTERISTICS RECOMMENDED BY THE COOLING TOWER MANUFACTURER.

2 E1.0 MDP
SCALE: 1/4" = 1'-0"

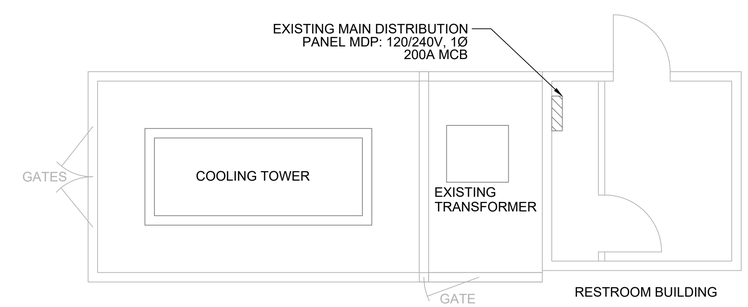

3 E1.0 COOLING TOWER PLAN
SCALE: 1/4" = 1'-0"

DESIGNED: ELS CADD ELS TECH. REVIEW: HACE DATE: 2/9/2026	SUB SHEET NO. E1.0	TITLE OF SHEET ELECTRICAL SITE PLAN REPLACE GEOTHERMAL SYSTEM MEMORIAL HOUSE GEORGE WASHINGTON BIRTHPLACE NATIONAL MONUMENT	DRAWING NO. 332 / 114081 PMIS/PKG NO. 305342 SHEET 18 OF 20

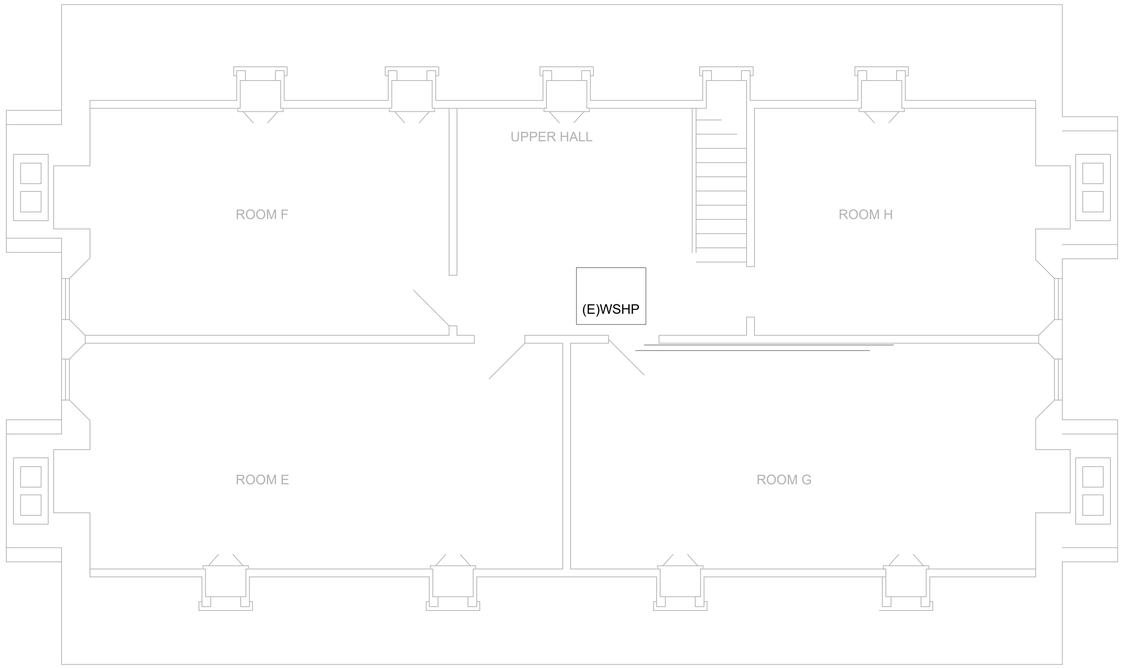

2 E2.0 LEVEL 2
SCALE: 1/4" = 1'-0"

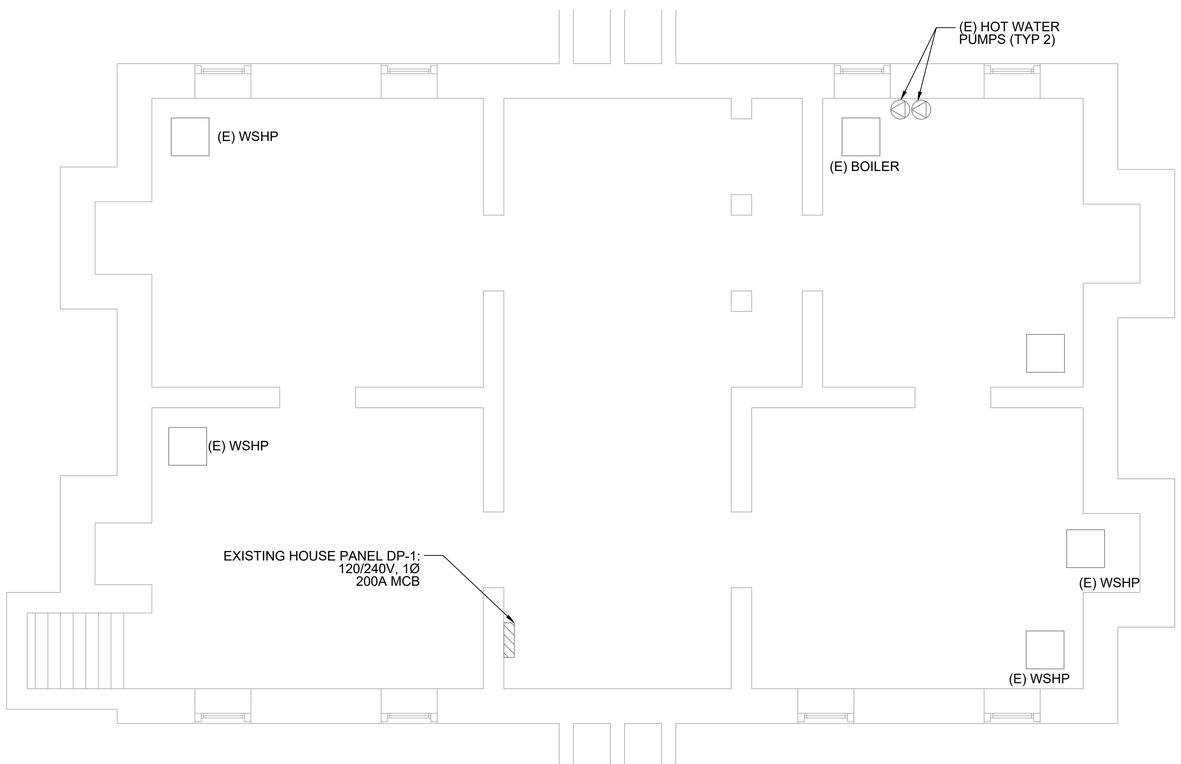

1 E2.0 BASEMENT
SCALE: 1/4" = 1'-0"

SHEET NOTES:

1. (5) WATER SOURCES HEAT PUMPS, (1) BLOWER FAN, A BOILER, AND (2) HOT WATER TO BE REMOVED BY ANOTHER CONTRACTOR. THIS CONTRACT SHALL DISCONNECT POWER WIRING AND REMOVE WIRING, CONDUIT AND DEVICES, BACK TO PANEL HOUSE PANEL.
2. VERIFY THAT FEEDERS ARE DE-ENERGIZED AND DEVICES ARE OBSOLETE AND REMOVE WIRING, RACEWAY AND DEVICES. NOTIFY THE COR IF A FEEDER AND ASSOCIATED DEVICES ARE FOUND TO BE FOR EQUIPMENT THAT IS IN-SERVICE: SEE PHOTO P1.

4 E2.0 DISTRIBUTION PANEL
SCALE: NTS

3 E2.0 DISTRIBUTION PANEL
SCALE: NTS

1/4"=1'-0" 4' 0 4 8

DESIGNED: ELS CADD ELS TECH. REVIEW: HACE DATE: 2/9/2026	SUB SHEET NO. E2.0	TITLE OF SHEET DEMOLITION FLOOR PLAN REPLACE GEOTHERMAL SYSTEM MEMORIAL HOUSE GEORGE WASHINGTON BIRTHPLACE NATIONAL MONUMENT	DRAWING NO. 332 / 114081 PMIS/PKG NO. 305342 SHEET 19 OF 20

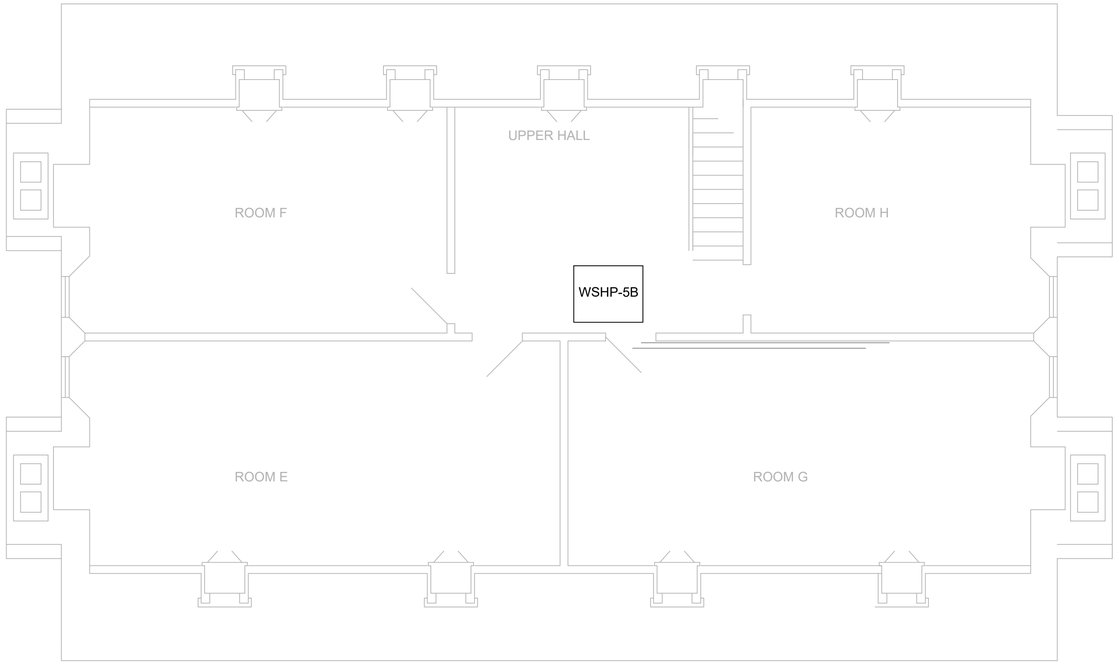

2 E2.1 LEVEL 2
SCALE: 1/4" = 1'-0"

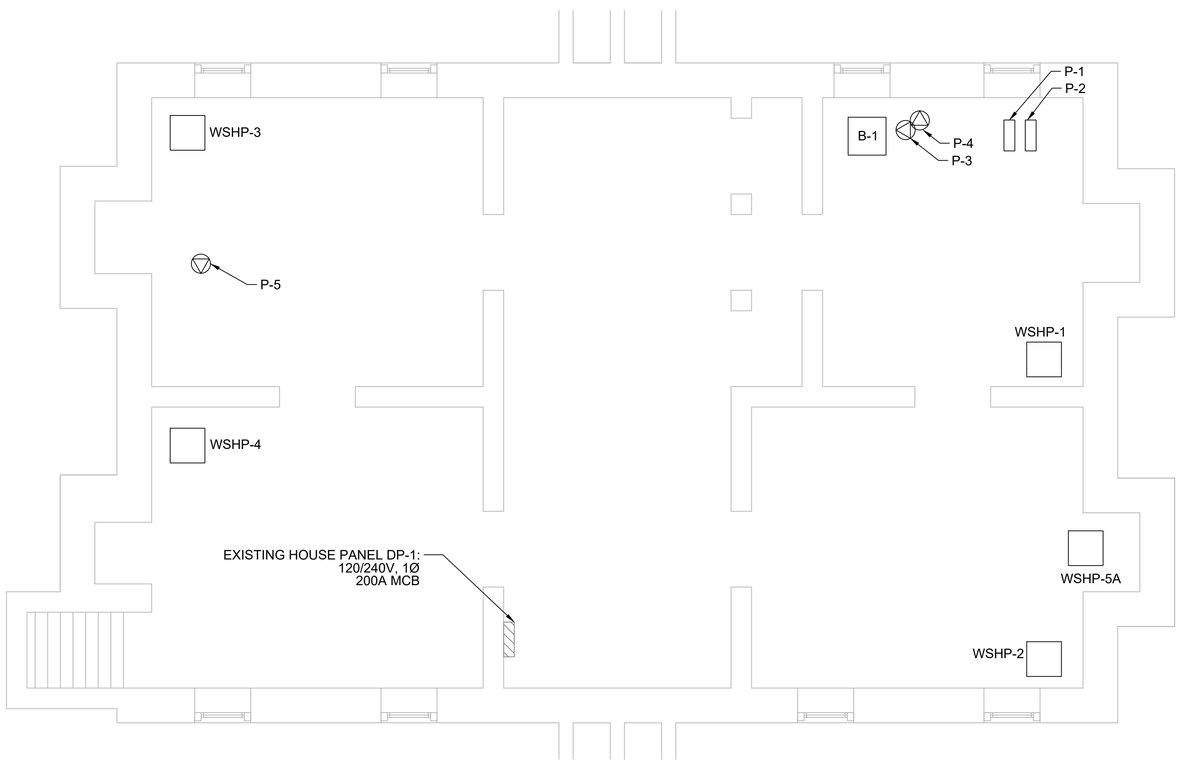

1 E2.1 BASEMENT
SCALE: 1/4" = 1'-0"

SHEET NOTES

1. (4) NEW WATER SOURCE HEAT PUMPS (WSHP-1-4): 208V,1Ø, 10.1 MCA FURNISHED AND SET-IN-PLACE BY ANOTHER CONTRACTOR. THIS CONTRACT SHALL PROVIDE NEW BRANCH CIRCUIT WIRING FROM PANEL, NEW SAFETY SWITCH AND POWER CONNECTIONS.
2. NEW WATER SOURCE HEAT PUMPS (WSHP-5A): 208V,1Ø, 18.2 MCA FURNISHED AND SET-IN-PLACE BY ANOTHER CONTRACTOR. THIS CONTRACT SHALL PROVIDE NEW BRANCH CIRCUIT WIRING FROM PANEL, NEW SAFETY SWITCH AND POWER CONNECTIONS.
3. NEW BLOWER UNIT (WSHP-5B): 208V,1Ø, 4.2 MCA FURNISHED AND SET-IN-PLACE BY ANOTHER CONTRACTOR. THIS CONTRACT SHALL PROVIDE NEW BRANCH CIRCUIT WIRING FROM PANEL, NEW SAFETY SWITCH AND POWER CONNECTIONS.
4. NEW BOILER: 120V, 1Ø, FURNSIHED AND SET-IN-PLACE BY ANOTHER CONTRACTOR. THIS CONTRACT SHALL PROVIDE NEW BRANCH CIRCUIT WIRING FROM PANEL, NEW SAFETY SWITCH AND POWER CONNECTIONS.
5. FIVE NEW PUMPS FURNISHED AND SET-IN-PLACE BY ANOTHER CONTRACTOR. THIS CONTRACTOR SHALL PROVIDE POWER.
6. PROVIDE NEW WALL MOUNTED VARIABLE FREQUENCY DRIVES HAVING THE CHARACTERISTICS RECOMMENDED BY THE PUMPS MANUFACTURER. SEE 1-LINE DIAGRAM.
7. EXISTING PANEL: PROVIDE NEW CIRCUIT BREAKERS FOR ALL REPLACEMENT & NEW EQUIPMENT. PROVIDE NEW COVER DOOR WITH NAMEPLATE ON THE COVER TO IDENTIFY THE PANEL & ELECTRICAL CHARACTERISTICS.
8. RUN ALL NEW WIRING THROUGH EXISTING WALL AND FLOOR OPENINGS.

1/4"=1'-0" 4' 0 4 8

DESIGNED: ELS CADD ELS TECH. REVIEW: HACE DATE: 2/9/2026	SUB SHEET NO. E2.1	TITLE OF SHEET NEW WORK FLOOR PLAN REPLACE GEOTHERMAL SYSTEM MEMORIAL HOUSE GEORGE WASHINGTON BIRTHPLACE NATIONAL MONUMENT	DRAWING NO. 332/114081 PMIS/PKG NO. 305342 SHEET 20 OF 20