United States Department of Agriculture
Forest Service

## EASTERN REGION
## WHITE MOUNTAIN NATIONAL FOREST - SACO RANGER DISTRICT
## CARROLL COUNTY
## NEW HAMPSHIRE

# ROB BROOK ROAD BRIDGE
# BRIDGE REPLACEMENT FR 35 MP 0.1

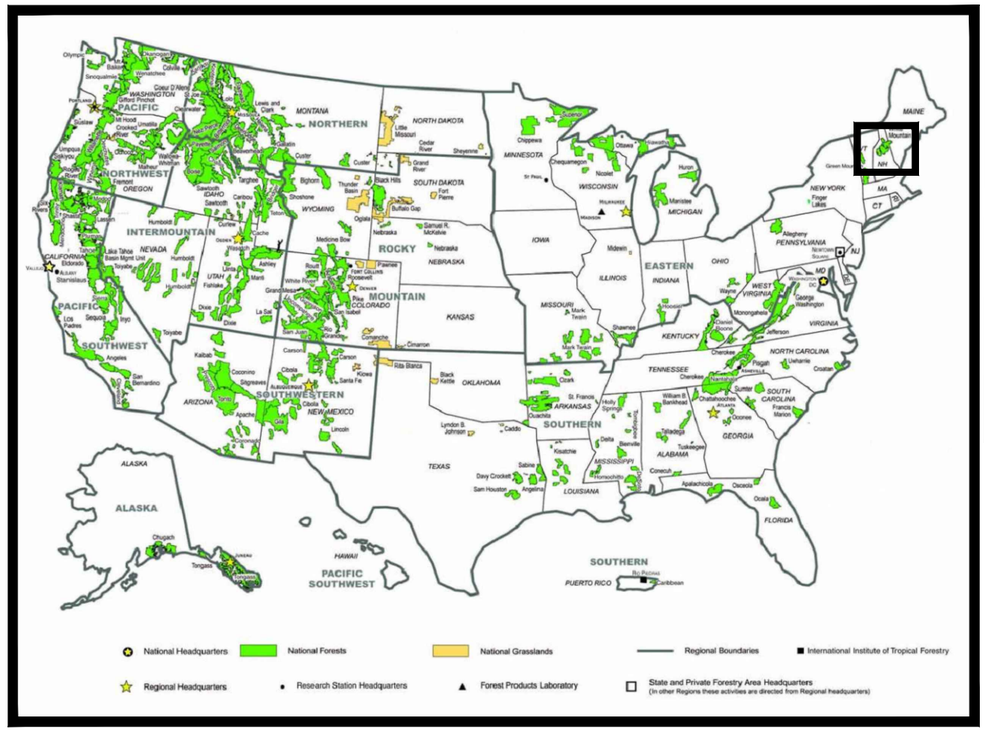


## PROJECT LOCATION

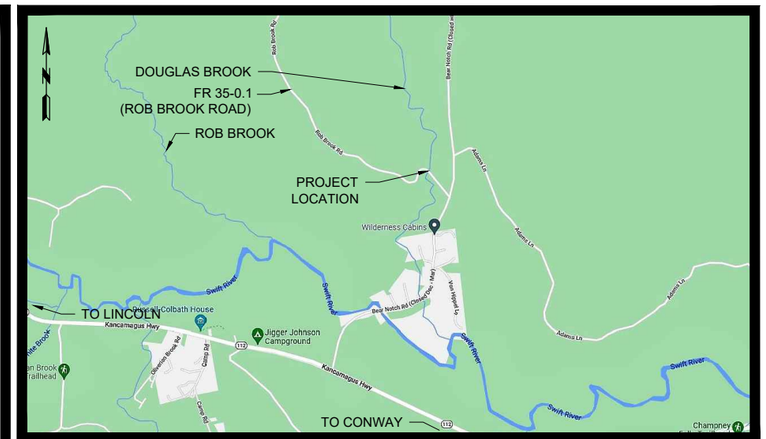


## PROJECT SITE

**PROJECT LOCATION:** FROM THE US HWY 110 / YORK POND ROAD INTERSECTION NORTHWEST OF BERLIN, NEW HAMPSHIRE HEAD SOUTHWEST ON YORK POND ROAD FOR 1.6 MILES, THEN TURN LEFT ONTO FR 15-7.9. CONTINUE ON FR 15-7.9 FOR 7.7 MILES TO THE BRIDGE LOCATION.

**STRUCTURE NUMBER:092205000036070 (LAT 44.0044, LONG -71.3225)**

**PROPOSED STRUCTURE DESCRIPTION:**

**50 FOOT (OVERALL LENGTH) SINGLE SPAN STEEL GIRDER BRIDGE WITH A TIMBER NAIL-LAM DECK, CONCRETE ABUTMENTS AND MICROPILE FOUNDATIONS.**

**DESIGN SPEED: 20 MPH**

**AADT: <100**

**INDEX OF SHEETS**


| SHEET | SHEET TITLE | DATE |
|---|---|---|
| G-01 | TITLE SHEET | 7/18/2023 |
| C-02 | DESIGN DATA & GENERAL NOTES | 7/18/2023 |
| C-03 | QUANTITIES & MISCELLANEOUS DETAILS | 7/18/2023 |
| C-04 | TEMPORARY TRAFFIC CONTROL PLAN | 7/18/2023 |
| C-05 | TYPICAL SECTIONS | 7/18/2023 |
| C-06 | PLAN OF SITE | 7/18/2023 |
| C-07 | PROFILE OF SITE | 7/18/2023 |
| C-08 | PLAN OF STRUCTURE | 7/18/2023 |
| C-09 | ABUTMENT PLAN AND ELEVATION | 7/18/2023 |
| C-10 | MICROPILE LAYOUT PLAN | 7/18/2023 |
| C-11 | MICROPILE DETAILS | 7/18/2023 |
| C-12 | STRUCTURE DETAILS | 7/18/2023 |
| C-13 | REINFORCEMENT | 7/18/2023 |
| C-14 | SOIL BORINGS | 7/18/2023 |
| C-15 - C-17 | CROSS SECTIONS | 7/18/2023 |


U.P. ENGINEERS & ARCHITECTS, INC.
ENGINEERING ARCHITECTURE PLANNING SURVEYING ENVIRONMENTAL

STATE OF MICHIGAN
GUST B. JUNTTILA
ENGINEER
No. 63756
LICENSED PROFESSIONAL ENGINEER

Gust Junttila
Jul 19 2023 11:38 AM

**RECOMMENDED BY:**

WARREN LEES — Digitally signed by WARREN LEES Date: 2024.08.08 09:32:42 -04'00'
FOREST ENGINEER — DATE

JAMES INNES — Digitally signed by JAMES INNES Date: 2024.08.20 16:54:35 -04'00'
DISTRICT RANGER — DATE

DEREK IBARGUEN — Digitally signed by DEREK IBARGUEN Date: 2024.08.22 13:45:13 -04'00'
FOREST SUPERVISOR — DATE

JEFFREY DULKA — Digitally signed by JEFFREY DULKA
DN: CN=JEFFREY DULKA + OID.0.9.2342.19200300.100.1.1=12001002948495, OU=Department of Agriculture, O=U.S. Government, C=US
Location: USFS Northeast Region
Reason: I am approving this document
Date: 2024.08.22 11:10:06 -05'00'
R9 BRIDGE PROGRAM MANAGER — DATE

**APPROVED:**

JOSIAH KIM — Digitally signed by JOSIAH KIM Date: 2024.09.12 06:54:58 -05'00'
R9 DIRECTOR OF ENGINEERING — DATE



7/18/23 11:14 JALLEN Z:\U28\42592 USDA FS R9 TST-USFS BRIDGE IDIQ - 21 BRIDGES\BIDSET\TASK 102 - WMNF ROB BROOK\100 PERCENT DOCS - FINAL\FR 35-0.1 DOUGLAS BROOK.DWG;

# DESIGN DATA:

LOAD RATING (RATING FACTORS):

HL-93 (FEDERAL)

INVENTORY RATING (STRENGTH I, FLEXURE).....2.35

OPERATING RATING (STRENGTH I, FLEXURE).....3.05

LEGAL

OPERATING RATING (STRENGTH II, FLANGE STRESS)(NRL).....2.87

NOTE: THE LOAD RATING DOES NOT INCLUDE A FUTURE WEARING SURFACE.
LIVE LOAD DEFLECTION DOES NOT EXCEED 1/500 OF THE SPAN LENGTH.
BRIDGE RAILING MEETS TEST LEVEL 2 REQUIREMENTS OF NCHRP REPORT 350.

DEAD LOAD:

THE BRIDGE RAILING LOAD = 47 PLF (PER SIDE).

ULTIMATE DESIGN STRESSES:

STRUCTURAL CONCRETE CLASS A:

SUBSTRUCTURES (ABUTMENTS, FOOTINGS, WINGWALLS).....f ' c = 4,500 PSI

# HYDRAULIC DATA:

100 YEAR FREQUENCY

DRAINAGE AREA.....4.82 SQ MI

Q100.....1390 CFS

VELOCITY THRU STRUCTURE.....8.02 FPS

BRIDGE OPEN AREA THRU STRUCTURE.....343.41 SQ FT

FLOW AREA THRU STRUCTURE.....203.45 SQ FT

HIGH WATER ELEVATION.....1315.26 FT

SCOUR CRITICAL CODE.....8

# GENERAL NOTES:

EXCEPT WHERE OTHERWISE INDICATED ON THESE PLANS OR IN THE SUPPLEMENTAL SPECIFICATIONS, ALL MATERIALS AND WORKMANSHIP SHALL BE IN ACCORDANCE WITH THE FHWA STANDARD SPECIFICATIONS FOR CONSTRUCTION OF ROADS AND BRIDGES ON FEDERAL HIGHWAY PROJECTS, FP-14.

THE PROPOSED IMPROVEMENTS COVERED BY THESE PLANS ARE IN ACCORDANCE WITH:

FHWA STANDARD SPECIFICATIONS FOR CONSTRUCTION OF ROADS AND BRIDGES ON FEDERAL HIGHWAY PROJECTS, FP-14
AASHTO: "GUIDELINES FOR GEOMETRIC DESIGN OF VERY LOW-VOLUME LOCAL ROADS", 2ND EDITION, 2019
AASHTO LRFD BRIDGE DESIGN SPECIFICATIONS, 9TH EDITION, 2020
FSH 7709.56b TRANSPORTATION STRUCTURES HANDBOOK (USDA FOREST SERVICE)

THE EXISTING STRUCTURE SHALL BE CHECKED AT THE TIME OF STARTING CONSTRUCTION TO SEE THAT ITS RELATIONSHIP TO THE PROPOSED WORK IS AS SHOWN ON THESE PLANS AND ANY DIFFERENCES REQUIRING CHANGES IN THE NEW WORK SHALL BE REPORTED TO THE FOREST SERVICE CONTRACTING OFFICER REPRESENTATIVE.

THE WORK COVERED BY THESE PLANS INCLUDES REMOVAL OF THE ENTIRE EXISTING BRIDGE, INSTALLATION OF THE NEW BRIDGE AS SHOWN HEREIN, CONSTRUCTION OF THE APPROACHES TO THE LIMITS SHOWN, SLOPE RESTORATION AND RIPRAP.

THE ROAD WILL BE CLOSED AND A DETOUR ROUTE IS NOT POSSIBLE.

THE STATIONING AS SHOWN ON THESE PLANS FOR REFERENCE POINTS "A" AND "B" ARE BELIEVED TO BE CORRECT. IT SHALL, HOWEVER, BE CHECKED AT THE TIME OF STARTING CONSTRUCTION, AND IF THE STATIONING SHOWN ON THE PLANS IS INCORRECT, IT SHALL BE REPORTED TO THE FOREST SERVICE CONTRACTING OFFICER REPRESENTATIVE.

THE CONTRACTOR SHALL COORDINATE ALL OF THEIR WORK AND ANY UTILITY COMPANIES RELOCATION WORK AT NO ADDITIONAL COST TO THE PROJECT.

FOR PROTECTION OF UNDERGROUND UTILITIES AND IN CONFORMANCE WITH PUBLIC ACT 174, THE CONTRACTOR SHALL DIAL "811" A MINIMUM OF THREE FULL WORKING DAYS, EXCLUDING SATURDAYS, SUNDAYS AND HOLIDAYS PRIOR TO BEGINNING EACH EXCAVATION IN AREAS WHERE PUBLIC UTILITIES HAVE NOT BEEN PREVIOUSLY LOCATED. MEMBERS WILL THUS BE ROUTINELY NOTIFIED. THIS DOES NOT RELIEVE THE CONTRACTOR OF THE RESPONSIBILITY OF NOTIFYING UTILITY OWNERS WHO MAY NOT BE A PART OF THE "DIG SAFE" ALERT SYSTEM.

ALL EXPOSED CONCRETE CORNERS SHOWN ON THE PLANS SHALL BE BEVELED WITH 3/4" TRIANGULAR MOLDINGS EXCEPT AS NOTED OTHERWISE.

UNLESS SHOWN OTHERWISE ON THE PLANS, PROVIDE MINIMUM CONCRETE CLEAR COVER FOR REINFORCEMENT ACCORDING TO THE FOLLOWING:
CONCRETE CAST AGAINST EARTH: 3 INCH
ALL OTHER, UNLESS SHOWN ON THE PLANS: 2 INCH

WATER LEVEL IS SUBJECT TO CHANGE. THE CONTRACTOR IS RESPONSIBLE FOR DETERMINING THE EXPECTED WATER LEVELS DURING CONSTRUCTION.

NO MATERIAL SHALL BE ALLOWED TO ERODE INTO THE WATER COURSE, NOR SHALL MATERIAL BE PLACED INTO THE WATER COURSE EXCEPT AS SHOWN ON THESE PLANS.

ALL EQUIPMENT SHALL BE CLEANED ACCORDING TO THE SPECIFICATIONS PRIOR TO USE ON THIS PROJECT. CONTRACTOR SHALL MAKE EQUIPMENT AVAILABLE FOR INSPECTION PRIOR TO MOBILIZATION ONTO FS LANDS.

# GENERAL NOTES:

THE CONTRACTOR SHALL STOP WORK IMMEDIATELY AND NOTIFY THE FOREST SERVICE CONTRACTING OFFICER REPRESENTATIVE IF HERITAGE RESOURCES OR HUMAN REMAINS ARE ENCOUNTERED.

NO WORK SHALL BE PERFORMED ON FEDERAL HOLIDAYS OR WEEKENDS WITHOUT PRIOR APPROVAL FROM THE FOREST SERVICE CONTRACTING OFFICER REPRESENTATIVE.

THE CONTRACTOR SHALL PERFORM ALL IN-STREAM WORK BETWEEN JUNE 1ST AND SEPTEMBER 15TH.

TREES SHALL BE CUT BETWEEN NOVEMBER 15TH AND MARCH 31ST.

# MATERIAL & FABRICATION NOTES:

STEEL BEAMS:

THE W36x160 (GRADE 50W) BEAMS ARE "RE-USE" BEAMS FROM A DIFFERENT SITE. THEY ARE CURRENTLY STORED AT ( ) AND ARE READY FOR TRANSPORT.

MILD REINFORCEMENT:

ALL MILD REINFORCING STEEL SHALL BE GRADE 60, DEFORMED BILLET STEEL AND SHALL BE EPOXY COATED EXCEPT WHERE NOTED. ALL UNCOATED REINFORCING SHALL MEET THE REQUIREMENTS OF AASHTO M31. ALL EPOXY COATED REINFORCING SHALL MEET THE REQUIREMENTS OF AASHTO M284, EXCEPT WHERE AMENDED BY SECTION 433 OF THE STANDARD SPECIFICATIONS. ALL TENSION LAP SPLICES SHALL BE A CLASS B, CONTACT TYPE.

WELDING:

TACK WELDING OF REINFORCEMENT IS NOT PERMITTED. REINFORCING CAGES AND LONGITUDINAL STEEL SHALL BE ADEQUATELY TIED WITH APPROVED MEANS TO PREVENT RACKING AND MISALIGNMENT. ALL WELDING OF FABRICATED ITEMS, AS SHOWN IN THESE PLANS SHALL BE IN ACCORDANCE WITH ALL APPLICABLE PROVISIONS OF AASHTO/AWS D1.5, 2002.

SHOP DRAWINGS:
THE FABRICATOR SHALL BE RESPONSIBLE FOR THE PREPARATION OF SHOP DRAWINGS FOR THE TIMBER DECK, TIMBER RAILING, AND STEEL DIAPHRAGMS IN ACCORDANCE WITH THE STANDARD SPECIFICATIONS.

# CONSTRUCTION NOTES:

TIMBER DECK PANELS ARE MARKED IN THE SHOP FOR USE IN FIELD PLACEMENT OF THE PANELS ON THE GIRDERS, e.g. A1, B1, C1 FOR SPAN 1.

PLACE PANELS AS SHOWN ON SHOP DRAWINGS.

ALL HOLES DRILLED IN THE FIELD WHERE SPIKES ARE USED ARE TO BE 1/16" SMALL THAN THE SPIKE SIZE.

ALL HOLES DRILLED FOR BOLTS ARE TO BE 1/16" LARGER THAN BOLT SIZE.

HOLES DRILLED FOR 3/4" LAG BOLTS ARE TO BE 9/16" IN DIAMETER FOR THE THREADED PORTION OF THE BOLT AND 13/16" FOR THE SHANK.

ANY NUT OR MACHINE BOLT HEAD IN DIRECT CONTACT WITH TIMBER TO HAVE ONE PLATE WASHER BETWEEN NUT & TIMBER, AND BOLT HEAD & TIMBER.

ANY NUT OR MACHINE BOLT HEAD IN DIRECT CONTACT WITH STEEL TO HAVE ONE CUT WASHER BETWEEN NUT & STEEL, OR BOLT HEAD & STEEL.

SET THREADS ON ALL BOLTS AT NUT WITH A CENTER PUNCH AFTER TIGHTENING.

ABUTMENTS TO BE BACKFILLED WITH CLEAN GRANULAR FILL PER PLAN.

ALL TIMBER CUT OR DRILLED IN THE FIELD SHALL BE TREATED WITH COPPER NAPHTHENATE.

CONSTRUCTION REQUIREMENTS SHALL CONFORM TO STATE SPECIFICATIONS UNLESS OTHERWISE NOTED.

ALTHOUGH ALL PRACTICAL PRE-FRAMING WILL BE DONE PRIOR TO TREATING, SOME CUTTING & DRILLING WILL BE REQUIRED IN THE FIELD.

United States Department of Agriculture
Forest Service

EASTERN REGION

PROJECT NAME

**ROB BROOK ROAD BRIDGE REPLACEMENT FR 35 MP 0.1**

**WHITE MOUNTAIN NATIONAL FOREST**

**SACO RANGER DISTRICT**

DRAWING TITLE

**DESIGN DATA & GENERAL NOTES**

| | |
|---|---|
| DATE 7/18/2023 | |
| ARCHIVE NO. | |
| DESIGNER D.CARTER | DWG SHEET NO. C-02 |
| DRAWN J.ALLEN | |
| CHECKED G.JUNTTILA | SHEET 2 OF 17 |
| PROJECT NO. U28-02592 | |

7/18/23 11:14 JALLEN Z:\U28-02592 USDA FS R9 TST-USFS BRIDGE IDIQ - 21 BRIDGES\BIDSETT\ASK 102 - WMNF ROB BROOK\100 PERCENT DOCS - FINAL\FR 35-0.1 DOUGLAS BROOK.DWG;

# SPECIFICATIONS:

ALL GRADING COMBINATIONS, AND SIZE REFER TO DOUGLAS FIR UNLESS SHOWN OTHERWISE ON THE PLANS. THE DESIGN VALUES FOLLOW LRFD BRIDGE DESIGN SPECIFICATIONS. THESE ARE THE MINIMUM REQUIREMENTS. OTHER SPECIES MAY BE USED WITH APPROVAL FROM THE FOREST SERVICE CONTRACTING OFFICER REPRESENTATIVE AND AT NO ADDITIONAL COST TO THE GOVERNMENT.

GRADING:
ALL DOUGLAS FIR-LARCH TO BE GRADED PER WCLIB STANDARD GRADING RULES. SOUTHERN PINE TO BE GRADED PER SPIB.

STEEL DIAPHRAGMS SHALL BE AASHTO M270 GRADE 50W (WEATHERING STEEL).

MATERIAL & TREATMENT:
TIMBER PRESERVATION TREATMENT SHALL BE IN ACCORDANCE WITH CURRENT STATE AND/ OR AASHTO SPECIFICATIONS. ALL TIMBER SHALL BE TREATED WITH COPPER NAPHTHENATE HYDROCARBON SOLVENT A, PER AWPA, UC4C (MINIMUM).

REFERENCE DESIGN VALUES SHOWN ARE PER AASHTO LRFD BRIDGE DESIGN SPECIFICATIONS, 9TH EDITION, 2020 (U.N.O.)

DECK TO BE 6" DOUGLAS FIR-LARCH, NO.1 & BETTER (> 2 INCH WIDE) S1S. REFERENCE DESIGN VALUES (KSI): Fbo = 1.20, Fvo = 0.18, Eo = 1,800

BRIDGE RAILPOST TO BE DOUGLAS FIR-LARCH, DENSE SELECT STRUCTURAL (POSTS AND TIMBERS). REFERENCE DESIGN VALUES (KSI): Fbo = 1.75, Fvo = 0.17, Eo = 1,700

GLU-LAM RAIL TO BE DOUGLAS FIR, COMB. SYMBOL 24F-V8, DF/DF. REFERENCE DESIGN VALUES (KSI): Fbxo = 2.40, Fbyo = 1.55, Fvxo = 0.265, Fvyo = 0.23, Exo = 1,800, Eyo = 1,600

ALL TIMBER IS ROUGH UNLESS OTHERWISE NOTED.

MISCELLANEOUS:
ALL TIMBER TO BE CUT EXACT LENGTH, DRESSED TO SIZE REQUIRED AND ALL PRACTICAL FRAMING TO BE DONE PRIOR TO TREATMENT.

ALL DECK PLANKS SHALL BE PREDRILLED PRIOR TO TREATMENT.

ALL PLANK FOR DECK PANELS SHALL BE PRECISION END TRIMMED TO LENGTH WITH 1/4" UNDERLENGTH & NO OVERLENGTH TOLERANCE PERMITTED.

DECK PANELS SHALL BE ASSEMBLED WITH 3/8" DIAMETER RING SHANK DOWELS. ALL DOWELS ARE TO BE SIMULTANEOUSLY DRIVEN WITH EQUAL FORCE USING A MECHANICAL PRESS. ENSURING ALL HEADS ARE FLUSH WITH THE SURFACE OF THE TIMBER PLANK. MULTIPLE IMPACT TOOLS ARE NOT TO BE USED TO SET DOWELS BECAUSE OF POTENTIAL FOR WOOD FIBER RUPTURE.

DECK PANELS WILL BE DELIVERED TO JOBSITE AFTER BEING FULLY ASSEMBLED TO FABRICATION PLANT.

ALL HARDWARE FOR TIMBER CONNECTIONS TO MEET ASTM A307-97 GALVANIZED TO F2329 (A153). ALL HIGH STRENGTH HARDWARE FOR RAILING CONNECTIONS TO MEET ASTM F3125 GRADE A325 TYPE 3 OR GRADE A449 GALVANIZED TO A153.

STAINLESS STEEL ANCHOR BOLTS SHALL BE A193 GRADE B8M.

ALL BOLTED STEEL CONNECTIONS SHALL BE MADE WITH A325 TYPE III BOLTS.

IF GALVANIZED FASTENERS ARE CUT OR DAMAGED IN THE FIELD, THEY SHALL BE REPLACED OR TOUCHED UP WITH COLD GALVANIZING COMPOUND AT THE DISCRETION OF THE FOREST SERVICE CONTRACTING OFFICER REPRESENTATIVE.

# ABBREVIATIONS (PLAN):

LPSM - LUMP SUM
LNFT - LINEAR FEET
CUYD - CUBIC YARD
SQYD - SQUARE YARD
EA - EACH
LBS - POUNDS
EX - EXISTING
PROP - PROPOSED
NTS - NOT TO SCALE
TYP - TYPICAL
CL - CENTER LINE
CIP - COMPACTED IN PLACE
P.O.B. - POINT OF BEGINNING
P.O.E. - POINT OF ENDING
REF PT - REFERENCE POINT
OHWM - ORDINARY HIGH WATER MARK
OBS WSE - OBSERVED WATER SURFACE ELEVATION
Q100 WSE - 100 YEAR FLOOD WATER SURFACE ELEVATION
F.F. - FRONT FACE
B.F. - BACK FACE
SPA - SPACES
ABUT - ABUTMENT
PL - PLATE
GALV - GALVANIZED
U.N.O. - UNLESS NOTED OTHERWISE

**SUMMARY OF PROJECT QUANTITIES**

| ITEM NO. | DESCRIPTION | UNITS | QUANTITY |
|---|---|---|---|
| 15101 | MOBILIZATION | LPSM | 1 |
| 15201 | CONSTRUCTION SURVEY AND STAKING, METHOD 1, TOLERANCE CLASS C | LPSM | 1 |
| 15702 | SILT SOCK | LNFT | 320 |
| 15706 | CHECK DAMS | EACH | 8 |
| 15712 | TURBIDITY CURTAIN | LNFT | 100 |
| 20102 | CLEARING AND GRUBBING, DISPOSAL METHOD A | ACRE | 0.11 |
| 20304 | REMOVAL OF OLD STRUCTURE, DISPOSAL METHOD A | LPSM | 1 |
| 20401 | ROADWAY EXCAVATION, COMPACTION METHOD B | CUYD | 170 |
| 20411 | EMBANKMENT, PLACEMENT METHOD 1 | CUYD | 230 |
| 20801 | STRUCTURE EXCAVATION | CUYD | 494 |
| 20803 | STRUCTURAL BACKFILL | CUYD | 295 |
| 25101 | RIPRAP, CLASS II, MACHINE PLACED | CUYD | 86 |
| 30103 | AGGREGATE BASE, GRADING D, COMPACTION METHOD B | CUYD | 211 |
| 55103 | MICROPILE, LOAD TEST | EACH | 2 |
| 55151 | FURNISH PILE DRILLING EQUIPMENT | LPSM | 1 |
| 55201 | STRUCTURAL CONCRETE, CLASS A | CUYD | 85 |
| 55204 | ADHESIVE ANCHORING OF VERTICAL BARS | EACH | 16 |
| 55404 | EPOXY COATED REINFORCING STEEL | LBS | 9224 |
| 55501 | STRUCTURAL STEEL DIAPHRAGMS, FURNISHED, FABRICATED AND ERECTED | LB | 2989 |
| 55501.1 | STRUCTURAL STEEL STRINGERS, ERECTED | LB | 28500 |
| 55704 | TREATED STRUCTURAL TIMBER | LPSM | 1 |
| 56401 | BEARING DEVICE | EACH | 8 |
| 56701 | MICROPILE | LNFT | 680 |
| 60501 | UNDERDRAIN SYSTEM, 6 INCH | LNFT | 100 |
| 62403 | PLACING CONSERVED TOPSOIL, 3-INCH | SQYD | 863 |
| 62503 | SEEDING, HYDRAULIC OR DRY METHOD | LPSM | 1 |
| 62509 | MULCHING, HYDRAULIC OR DRY METHOD | LPSM | 1 |
| 62901 | ROLLED EROSION CONTROL PRODUCT, TYPE 2.D | SQYD | 863 |
| 63301 | SIGNS, TYPE III SHEETING | SQFT | 9 |
| 63305 | POST, WOOD, 4-INCH X 4-INCH | LNFT | 130 |
| 63306 | OBJECT MARKERS, TYPE 3 | EACH | 4 |
| 63310 | REMOVING SIGNS | EACH | 6 |
| 63501 | TEMPORARY TRAFFIC CONTROL | LPSM | 1 |
| SPV.210 | TEMPORARY CONSTRUCTION PAD | LPSM | 1 |

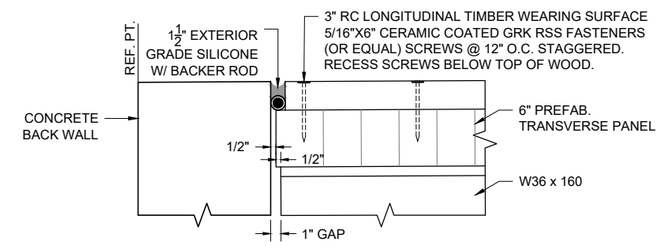


## ABUTMENT JOINT DETAIL

SCALE: NTS

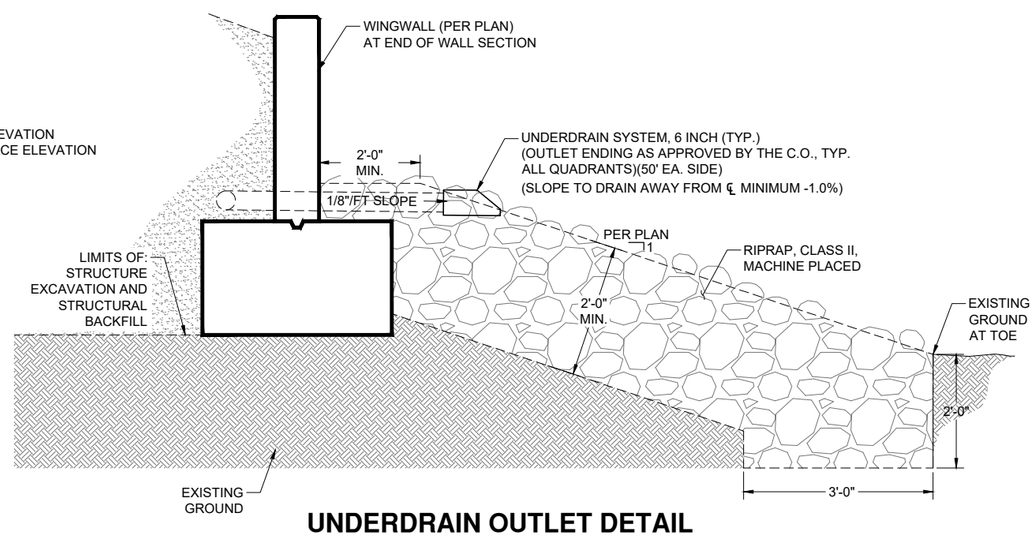


## UNDERDRAIN OUTLET DETAIL

SCALE: NTS

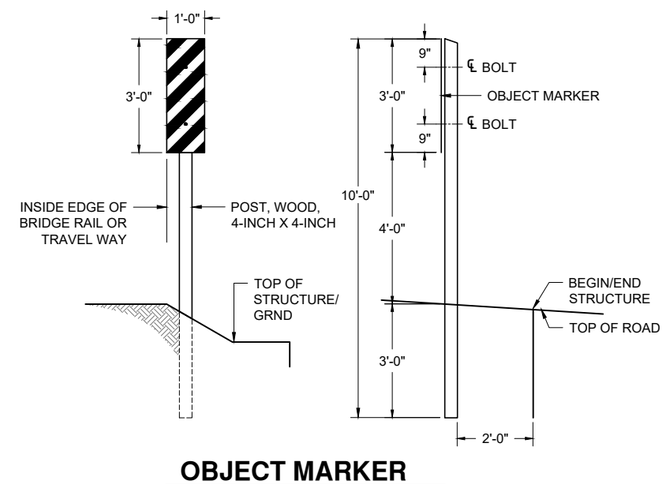


## OBJECT MARKER

SCALE: NTS

United States Department of Agriculture
Forest Service

EASTERN REGION

PROJECT NAME

**ROB BROOK ROAD BRIDGE REPLACEMENT FR 35 MP 0.1**

**WHITE MOUNTAIN NATIONAL FOREST**

**SACO RANGER DISTRICT**

DRAWING TITLE

**QUANTITIES & MISCELLANEOUS DETAILS**

DATE
7/18/2023

ARCHIVE NO.

DESIGNER
D.CARTER

DRAWN
J.ALLEN

CHECKED
G.JUNTTILA

PROJECT NO.
U28-02592

DWG SHEET NO.
C-03

SHEET 3 OF 17

7/18/23 15:40 JALLEN Z:\U28-02592 USDA FS R9 TST-USFS BRIDGE IDIQ - 21 BRIDGES\BIDSET\TASK 102 - WMNF ROB BROOK\100 PERCENT DOCS - FINAL\FR 35-0.1 DOUGLAS BROOK.DWG;

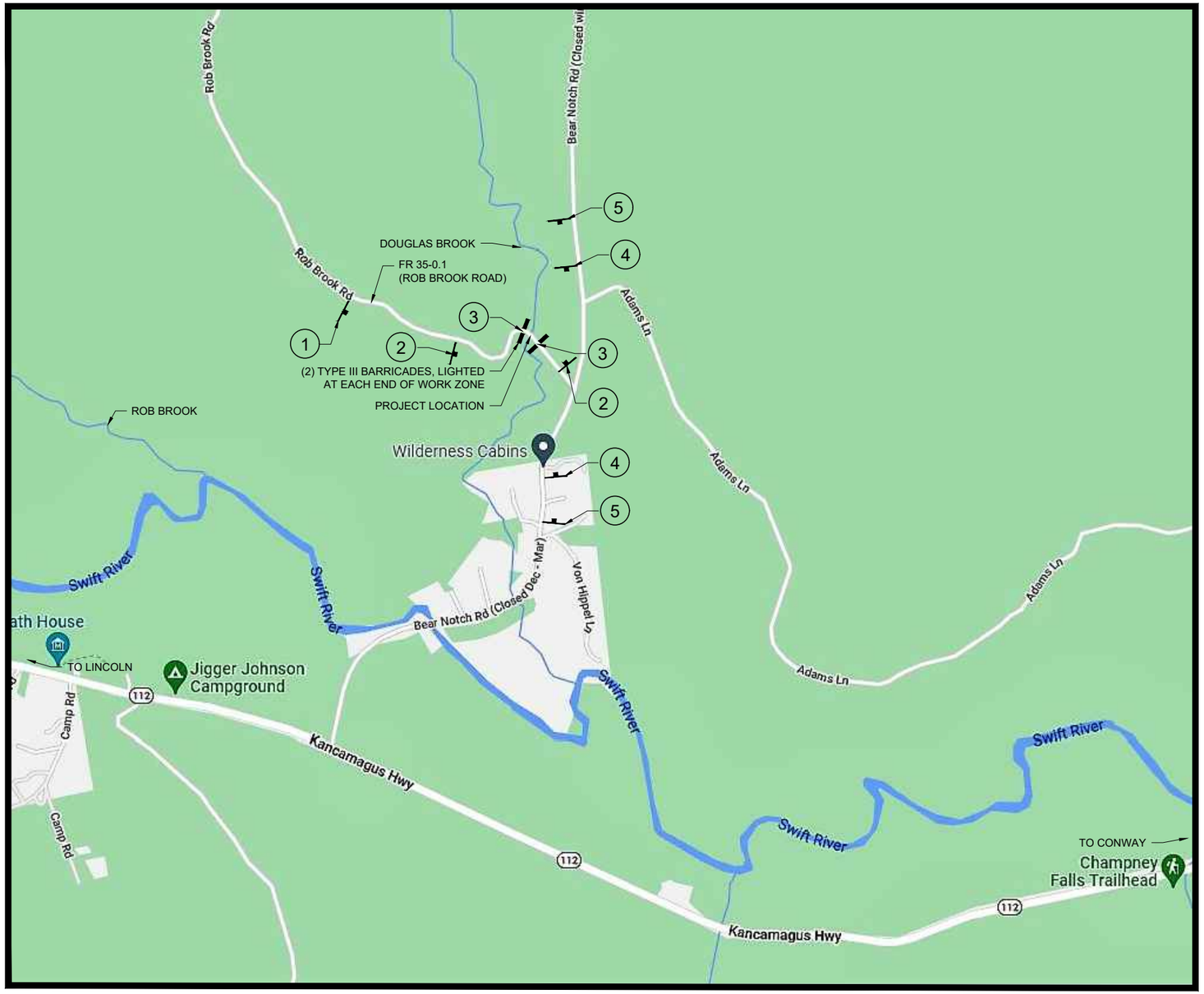


TRAFFIC CONTROL PLAN - ROAD CLOSURE

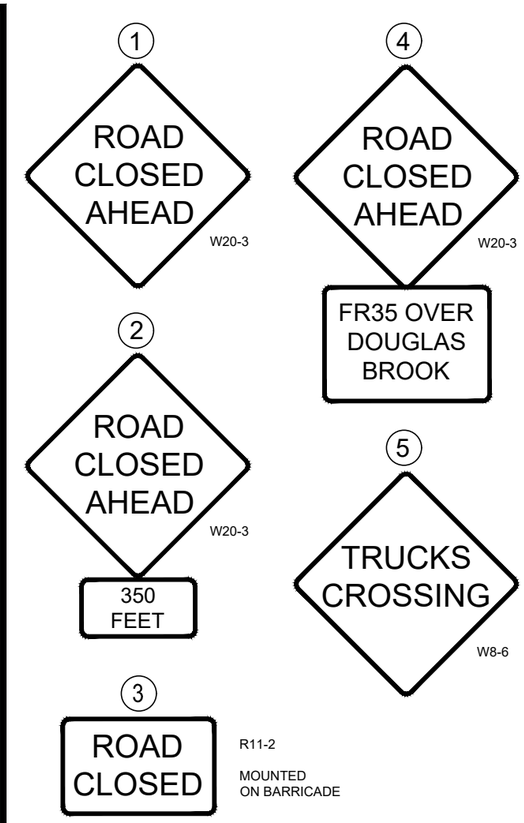


## TRAFFIC CONTROL PLAN KEY

- SIGN
- TYPE III BARRICADE

ALL SIGNS, EXCEPT THOSE MOUNTED ON TYPE III BARRICADES SHALL BE MOUNTED ON DRIVEN POSTS AT A 7 FOOT BOTTOM HEIGHT.

## DETOUR NOTES:

A DETOUR ROUTE IS NOT AVAILABLE FOR THE PROJECT LOCATION.

United States Department of Agriculture
Forest Service

EASTERN REGION

PROJECT NAME

**ROB BROOK ROAD BRIDGE REPLACEMENT FR 35 MP 0.1**

**WHITE MOUNTAIN NATIONAL FOREST**

**SACO RANGER DISTRICT**

DRAWING TITLE

**TEMPORARY TRAFFIC CONTROL PLAN**

| | |
|---|---|
| DATE 7/18/2023 | |
| ARCHIVE NO. | |
| DESIGNER D.CARTER | DWG SHEET NO. C-04 |
| DRAWN J.ALLEN | |
| CHECKED G.JUNTTILA | SHEET 4 OF 17 |
| PROJECT NO. U28-02592 | |

7/18/23 11:14 JALLEN Z:\U28-02592 USDA FS R9 TST-USFS BRIDGE IDIQ - 21 BRIDGES\BIDSET\TASK 102 - WMNF ROB BROOK\100 PERCENT DOCS - FINAL\FR 35-0.1 DOUGLAS BROOK.DWG;

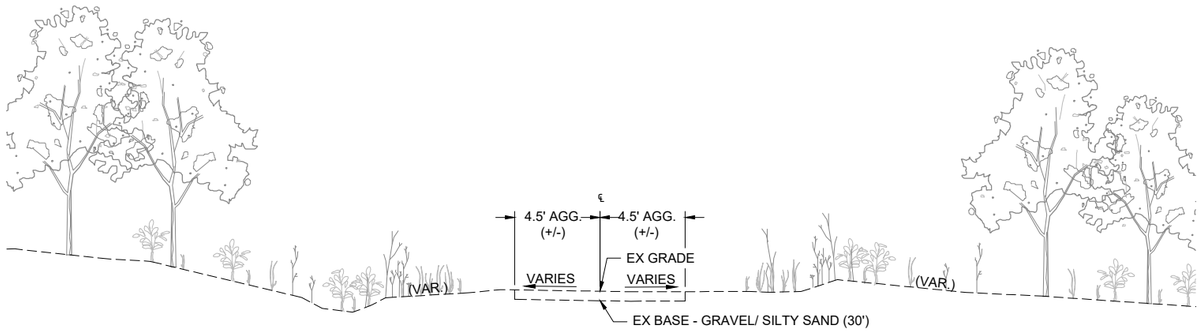


## EXISTING TYPICAL SECTION (STA 6+50 - STA 9+85.55)

SCALE: NTS

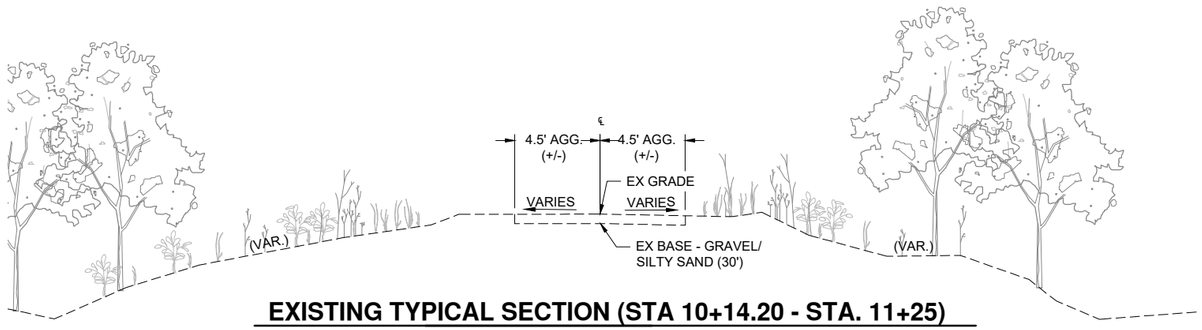


## EXISTING TYPICAL SECTION (STA 10+14.20 - STA. 11+25)

SCALE: NTS

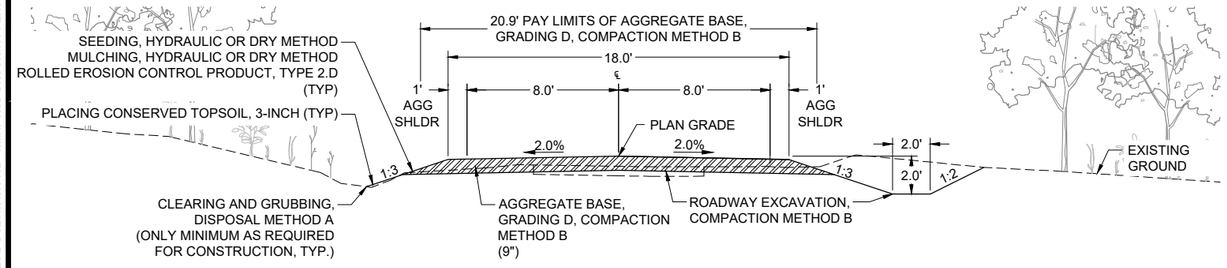


## PROPOSED TYPICAL SECTION (STA 6+50 - STA 9+80)

SCALE: NTS

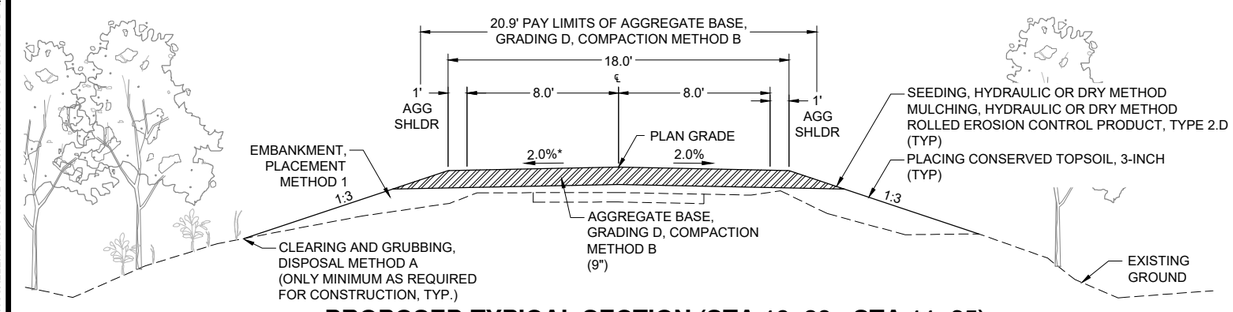


## PROPOSED TYPICAL SECTION (STA 10+30 - STA 11+25)

SCALE: NTS

* 2.0% OR PLANS INDICATE OTHERWISE (SHEET SHEET C-06)

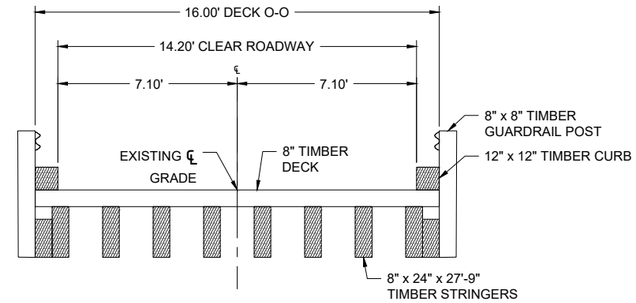


## EXISTING BRIDGE SECTION

SCALE: NTS

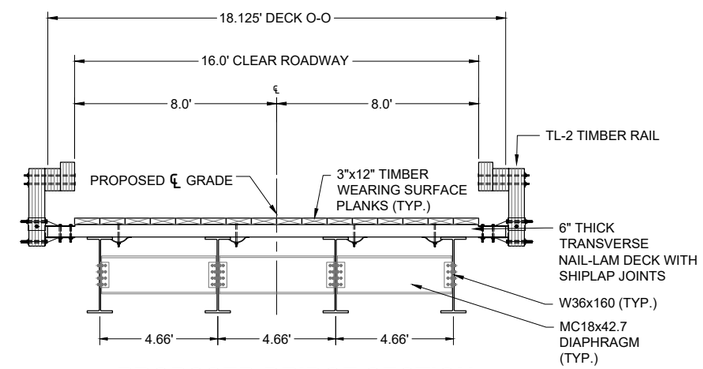


## PROPOSED BRIDGE SECTION

SCALE: NTS

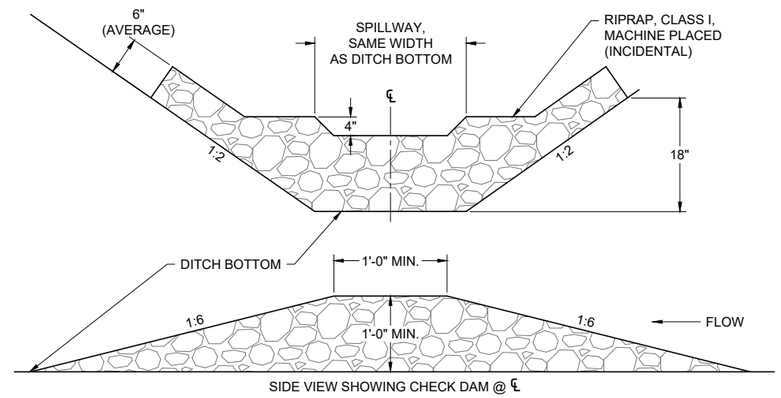


## PROPOSED CHECK DAM DETAIL

SCALE: NTS

United States Department of Agriculture
Forest Service

EASTERN REGION

PROJECT NAME

**ROB BROOK ROAD BRIDGE REPLACEMENT FR 35 MP 0.1**

**WHITE MOUNTAIN NATIONAL FOREST**

**SACO RANGER DISTRICT**

DRAWING TITLE

**TYPICAL SECTIONS**

| | |
|---|---|
| DATE 7/18/2023 | |
| ARCHIVE NO. | |
| DESIGNER D.CARTER | DWG SHEET NO. C-05 |
| DRAWN J.ALLEN | |
| CHECKED G.JUNTTILA | SHEET 5 OF 17 |
| PROJECT NO. U28-02592 | |

7/18/23 11:14 JALLEN Z:\U28-02592 USDA FS R9 TST-USFS BRIDGE IDIQ - 21 BRIDGES\BIDSETT\TASK 102 - WMNF ROB BROOK\100 PERCENT DOCS - FINAL\FR 35-0.1 DOUGLAS BROOK.DWG;

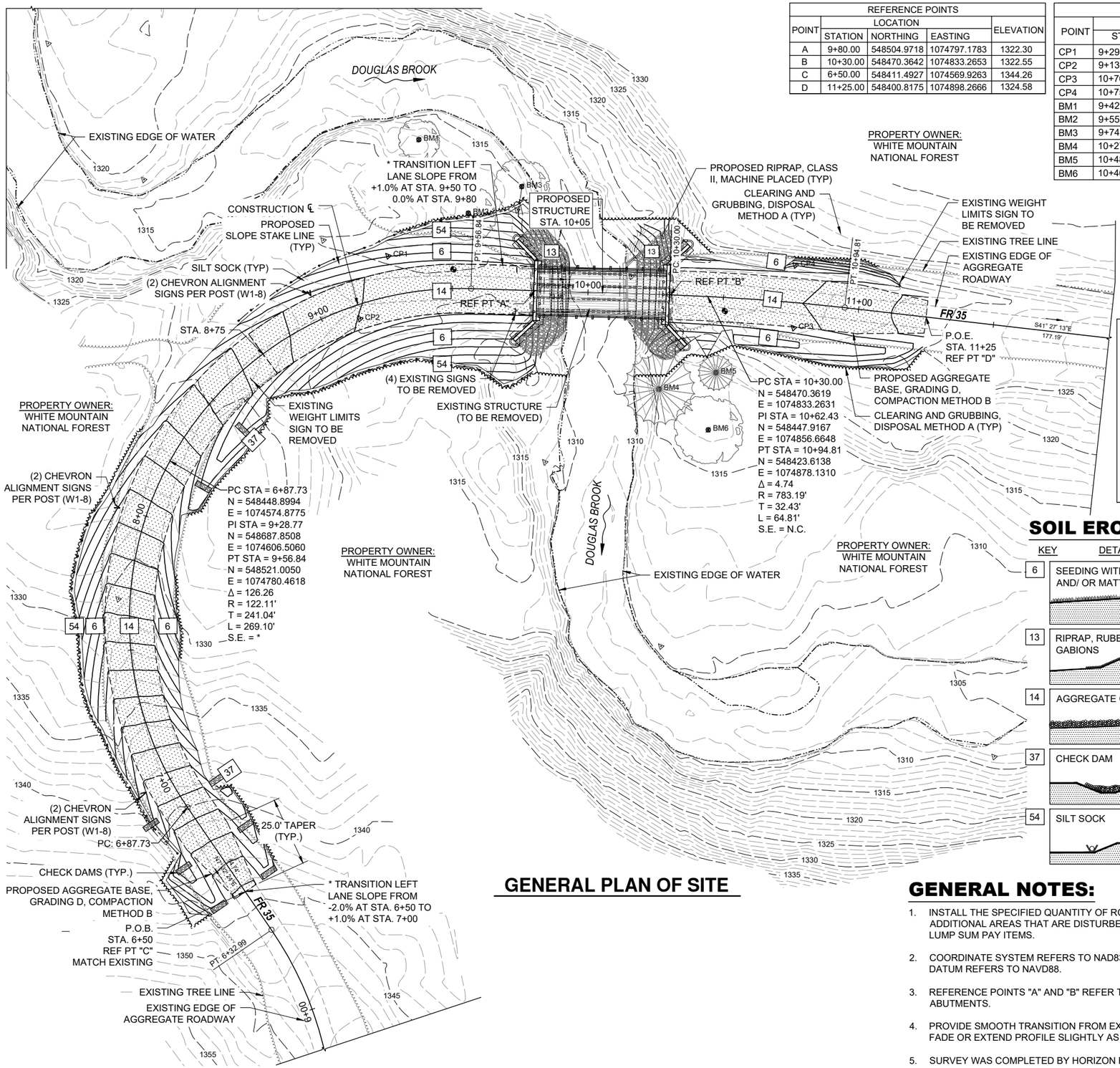


## GENERAL PLAN OF SITE

| REFERENCE POINTS | | | | |
|---|---|---|---|---|
| POINT | LOCATION | | | ELEVATION |
| | STATION | NORTHING | EASTING | |
| A | 9+80.00 | 548504.9718 | 1074797.1783 | 1322.30 |
| B | 10+30.00 | 548470.3642 | 1074833.2653 | 1322.55 |
| C | 6+50.00 | 548411.4927 | 1074569.9263 | 1344.26 |
| D | 11+25.00 | 548400.8175 | 1074898.2666 | 1324.58 |

| HORIZONTAL AND VERTICAL CONTROL | | | | | |
|---|---|---|---|---|---|
| POINT | LOCATION | | | ELEVATION | DESCRIPTION |
| | STA / OFFSET | NORTHING | EASTING | | |
| CP1 | 9+29.02, 14.62' LT | 548550.3810 | 1074765.8520 | 1319.82 | SPIKE |
| CP2 | 9+13.64, 5.10' RT | 548540.1550 | 1074742.6630 | 1320.52 | SPIKE |
| CP3 | 10+76.77, 9.29' RT | 548430.6910 | 1074859.2120 | 1322.60 | SPIKE |
| CP4 | 10+75.37, 13.73' LT | 548447.3710 | 1074875.1440 | 1324.03 | SPIKE |
| BM1 | 9+42.39, 55.52' LT | 548574.6940 | 1074802.8950 | 1318.50 | 8" MAPLE |
| BM2 | 9+55.26, 27.73' LT | 548542.3514 | 1074798.2514 | 1317.70 | 12" MAPLE |
| BM3 | 9+74.36, 38.18' LT | 548536.4300 | 1074819.5341 | 1315.05 | 12" BIRCH |
| BM4 | 10+27.27, 34.80' RT | 548447.1340 | 1074807.2010 | 1316.22 | 20" BIRCH |
| BM5 | 10+48.76, 27.87' RT | 548437.5860 | 1074826.8660 | 1316.22 | 6" FIR |
| BM6 | 10+46.92, 49.12' RT | 548423.8120 | 1074810.5910 | 1316.36 | 16" D. MAPLE |

## LEGEND

BENCHMARK — CONTROL POINT — SIGN

PROPOSED — EXISTING

- RIGHT OF WAY (R.O.W.)
- TREE LINE
- EDGE OF GRAVEL
- EDGE OF HMA
- SILT SOCK
- AGGREGATE BASE
- RIPRAP

## SOIL EROSION CONTROL REQUIREMENTS

| KEY | DETAIL | CHARACTERISTICS |
|---|---|---|
| 6 | SEEDING WITH MULCH AND/ OR MATTING | FACILITATES ESTABLISHMENT OF VEGETATIVE COVER. EFFECTIVE FOR DRAINAGEWAYS WITH LOW VELOCITY. EASILY PLACED IN SMALL QUANTITIES BY INEXPERIENCED PERSONNEL. SHOULD INCLUDE PREPARED TOPSOIL BED. EROSION MAT WITH NETTING IS PROHIBITED. |
| 13 | RIPRAP, RUBBLE, GABIONS | USED WHERE VEGETATION IS NOT EASILY ESTABLISHED. EFFECTIVE FOR HIGH VELOCITIES OR HIGH CONCENTRATIONS. PERMITS RUNOFF TO INFILTRATE SOIL. DISSIPATES ENERGY FLOW AT SYSTEM OUTLETS. |
| 14 | AGGREGATE COVER | STABILIZES SOIL SURFACE THUS MINIMIZING EROSION. PERMITS CONSTRUCTION TRAFFIC IN ADVERSE WEATHER. MAY BE USED AS PART OF PERMANENT BASE CONSTRUCTION OF PAVED AREAS. |
| 37 | CHECK DAM | CAN BE CONSTRUCTED ACROSS DITCHES OR ANY AREA OF CONCENTRATED FLOW. A CHECK DAM IS INTENDED TO REDUCE WATER VELOCITIES AND CAPTURE SEDIMENT. A CHECK DAM IS NOT A FILTERING DEVICE. |
| 54 | SILT SOCK | FILTERS AND DETAINS RUNOFF. |

## GENERAL NOTES:

1. INSTALL THE SPECIFIED QUANTITY OF ROLLED EROSION CONTROL PRODUCT (EMAT) AND THEN ANY ADDITIONAL AREAS THAT ARE DISTURBED BY THE CONTRACTOR SHALL BE SEEDED AND MULCHED UNDER THE LUMP SUM PAY ITEMS.
2. COORDINATE SYSTEM REFERS TO NAD83 NEW HAMPSHIRE STATE PLANES, US FOOT (ASSUMED COORDINATE). DATUM REFERS TO NAVD88.
3. REFERENCE POINTS "A" AND "B" REFER TO FINISH GRADE AT CENTERLINE AT THE BACK FACE OF THE ABUTMENTS.
4. PROVIDE SMOOTH TRANSITION FROM EXISTING TO PROPOSED ROADWAY AT REFERENCE POINTS "C" AND "D". FADE OR EXTEND PROFILE SLIGHTLY AS REQUIRED.
5. SURVEY WAS COMPLETED BY HORIZON ENGINEERING FOR THIS PROJECT ON 10-28-2022.

USDA FOREST SERVICE

United States Department of Agriculture
Forest Service

EASTERN REGION

811 Know what's below. Call before you dig.

PROJECT NAME

ROB BROOK ROAD BRIDGE REPLACEMENT FR 35 MP 0.1

WHITE MOUNTAIN NATIONAL FOREST

SACO RANGER DISTRICT

DRAWING TITLE

PLAN OF SITE

DATE 7/18/2023

ARCHIVE NO.

DESIGNER D.CARTER

DRAWN J.ALLEN

CHECKED G.JUNTTILA

PROJECT NO. U28-02592

DWG SHEET NO. C-06

SHEET 6 OF 17

7/18/23 15:40 JALLEN Z:\U28-02592 USDA FS R9 TST-USFS BRIDGE IDIQ - 21 BRIDGES\BIDSET\TASK 102 - WMNF ROB BROOK\100 PERCENT DOCS - FINAL\FR 35-0.1 DOUGLAS BROOK.DWG;

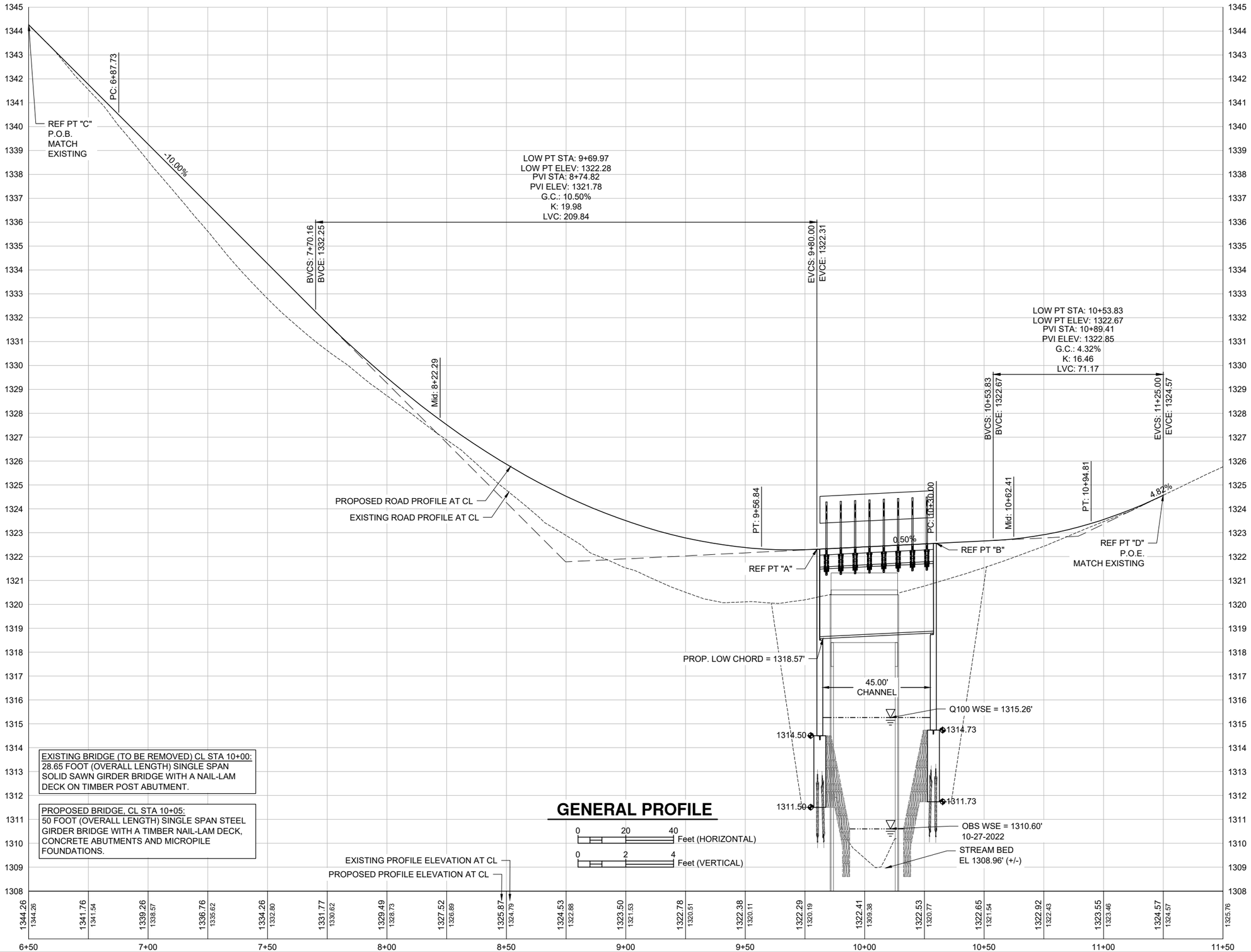


7/18/23 11:14 JALLEN Z:\U28-02592 USDA FS R9 TST-USFS BRIDGE IDIQ - 21 BRIDGES\BIDSET\TASK 102 - WMNF ROB BROOK\100 PERCENT DOCS - FINAL\FR 35-0.1 DOUGLAS BROOK.DWG;

United States Department of Agriculture
Forest Service

EASTERN REGION

PROJECT NAME

**ROB BROOK ROAD BRIDGE REPLACEMENT FR 35 MP 0.1**

**WHITE MOUNTAIN NATIONAL FOREST**

**SACO RANGER DISTRICT**

DRAWING TITLE

**PROFILE OF SITE**

| | |
|---|---|
| DATE 7/18/2023 | |
| ARCHIVE NO. | |
| DESIGNER D.CARTER | DWG SHEET NO. C-07 |
| DRAWN J.ALLEN | |
| CHECKED G.JUNTTILA | SHEET 7 OF 17 |
| PROJECT NO. U28-02592 | |

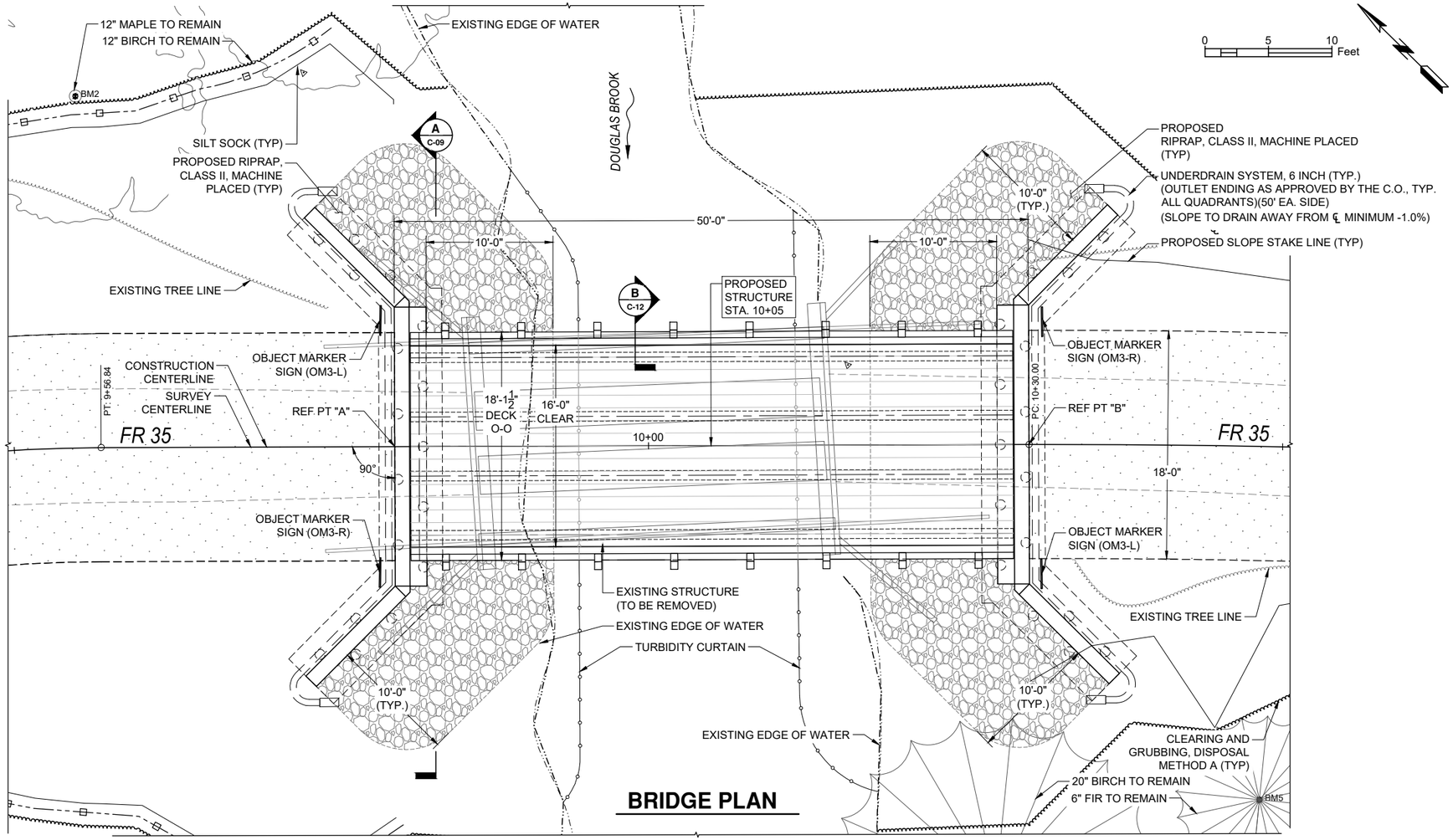


## BRIDGE PLAN

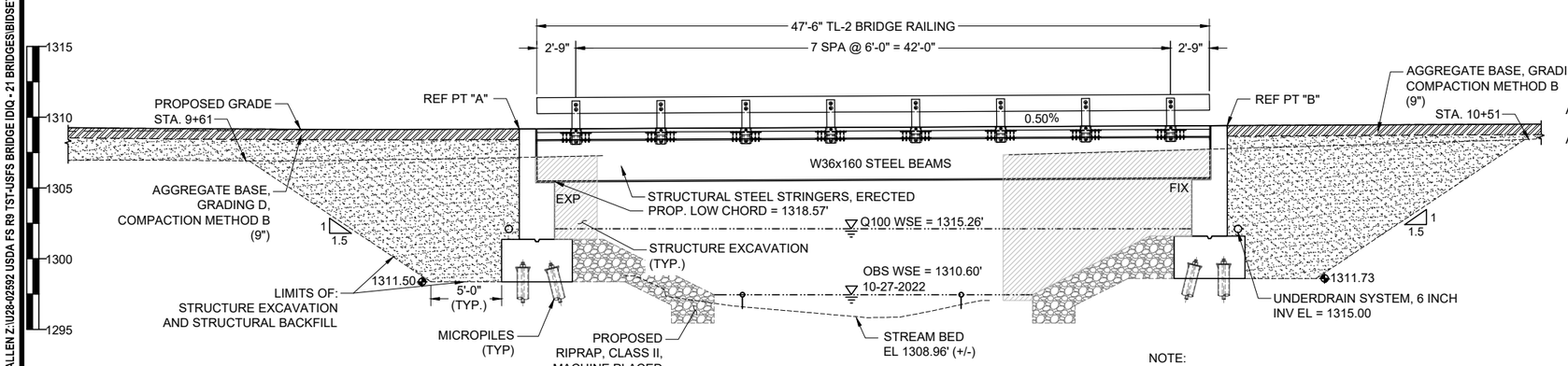


## BRIDGE ELEVATION

NOTE:

1. DOWEL-LAM DECK, WEARING SURFACE, RAILING, AND ALL HARDWARE TO BE INCLUDED WITH: TREATED STRUCTURAL TIMBER.

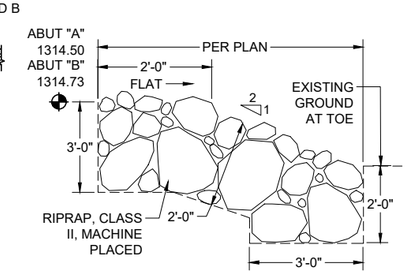


## RIPRAP DETAIL

SCALE: NTS

811 Know what's below. Call before you dig.

USDA FOREST SERVICE

United States Department of Agriculture
Forest Service

EASTERN REGION

PROJECT NAME

**ROB BROOK ROAD BRIDGE REPLACEMENT FR 35 MP 0.1**

**WHITE MOUNTAIN NATIONAL FOREST**

**SACO RANGER DISTRICT**

DRAWING TITLE

**PLAN OF STRUCTURE**

| | |
|---|---|
| DATE 7/18/2023 | |
| ARCHIVE NO. | |
| DESIGNER D.CARTER | DWG SHEET NO. C-08 |
| DRAWN J.ALLEN | |
| CHECKED G.JUNTTILA | SHEET 8 OF 17 |
| PROJECT NO. U28-02592 | |

7/18/23 15:40 JALLEN Z:\U28-02592 USDA FS R9 TST-USFS BRIDGE\DIQ - 21 BRIDGES\BIDSET\TASK 102 - WMNF ROB BROOK\100 PERCENT DOCS - FINAL\FR 35-0.1 DOUGLAS BROOK.DWG;

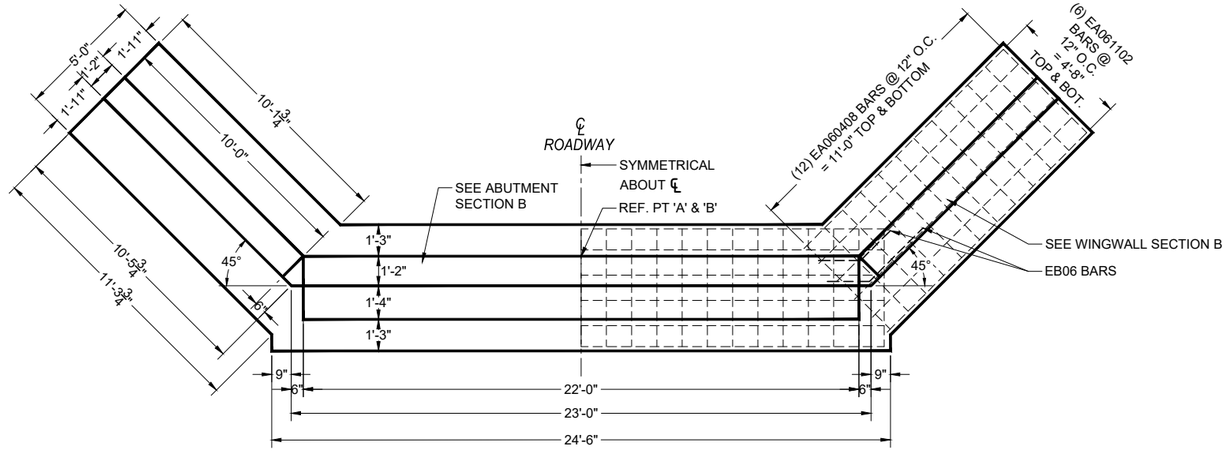


## ABUTMENT PLAN VIEW

SCALE: NTS

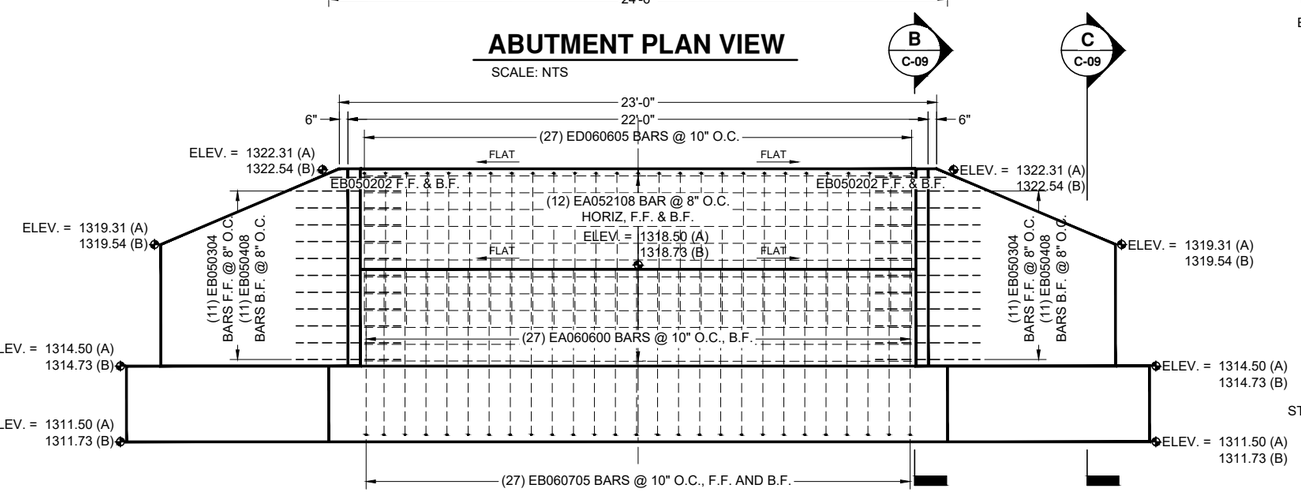


## A ABUTMENT ELEVATION

SCALE: NTS

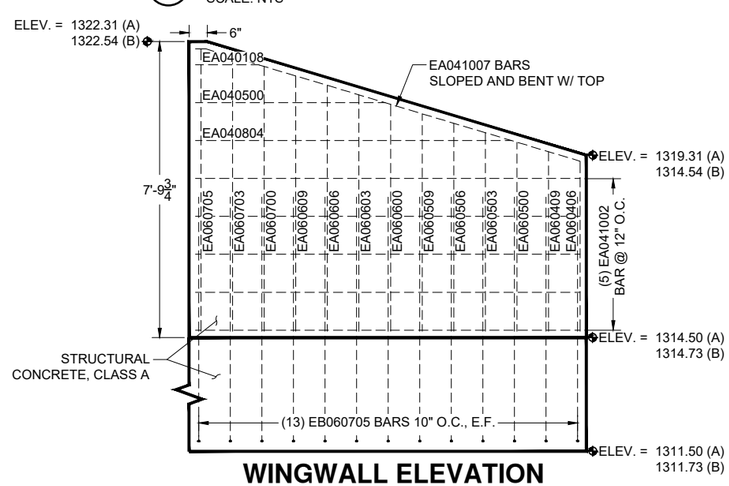


## WINGWALL ELEVATION

SCALE: NTS

| CONCRETE QUANTITIES - WEST ABUTMENT | | |
|---|---|---|
| DESCRIPTION | UNITS | QUANTITY |
| FOOTING | CUYD | 24.22 |
| ABUTMENT BODY | CUYD | 11.80 |
| WING WALL STEMS | CUYD | 6.00 |
| | TOTAL | 42.02 |

| CONCRETE QUANTITIES - EAST ABUTMENT | | |
|---|---|---|
| DESCRIPTION | UNITS | QUANTITY |
| FOOTING | CUYD | 24.22 |
| ABUTMENT BODY | CUYD | 11.80 |
| WING WALL STEMS | CUYD | 6.00 |
| | TOTAL | 42.02 |

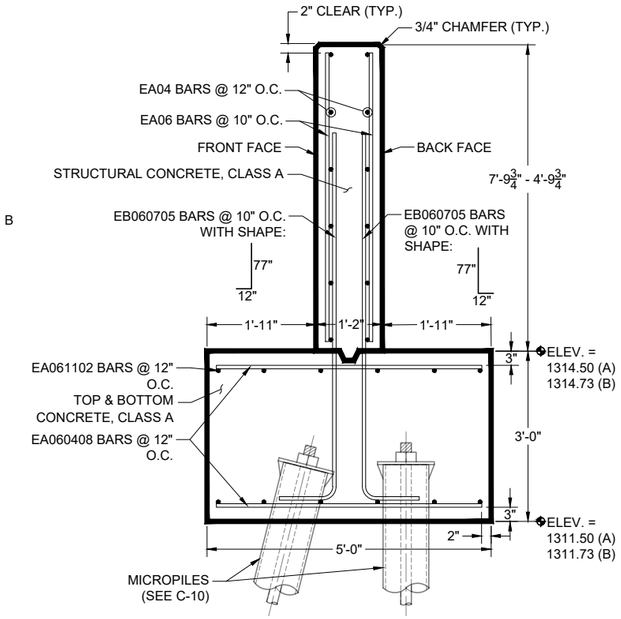


## C WINGWALL SECTION

SCALE: NTS

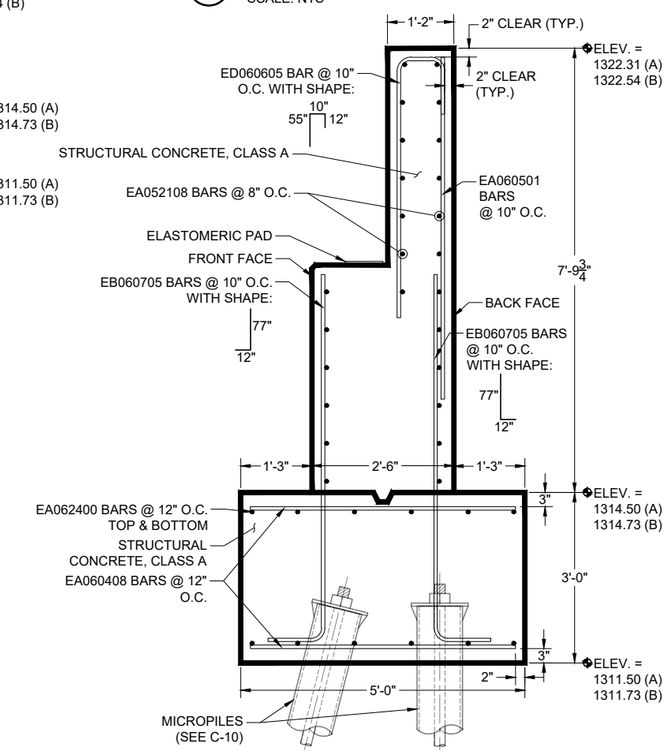


## B ABUTMENT SECTION

SCALE: NTS

USDA FOREST SERVICE

United States Department of Agriculture
Forest Service

EASTERN REGION

PROJECT NAME

**ROB BROOK ROAD BRIDGE REPLACEMENT FR 35 MP 0.1**

**WHITE MOUNTAIN NATIONAL FOREST**

**SACO RANGER DISTRICT**

DRAWING TITLE

**ABUTMENT PLAN AND ELEVATION**

| | |
|---|---|
| DATE 7/18/2023 | |
| ARCHIVE NO. | |
| DESIGNER D.CARTER | DWG SHEET NO. C-09 |
| DRAWN J.ALLEN | |
| CHECKED G.JUNTTILA | SHEET 9 OF 17 |
| PROJECT NO. U28-02592 | |

7/18/23 11:14 JALLEN Z:\U28-02592 USDA FS R9 TST-USFS BRIDGE IDIQ - 21 BRIDGES\BIDSET\TASK 102 - WMNF ROB BROOK\100 PERCENT DOCS - FINAL\FR 35-0.1 DOUGLAS BROOK.DWG;

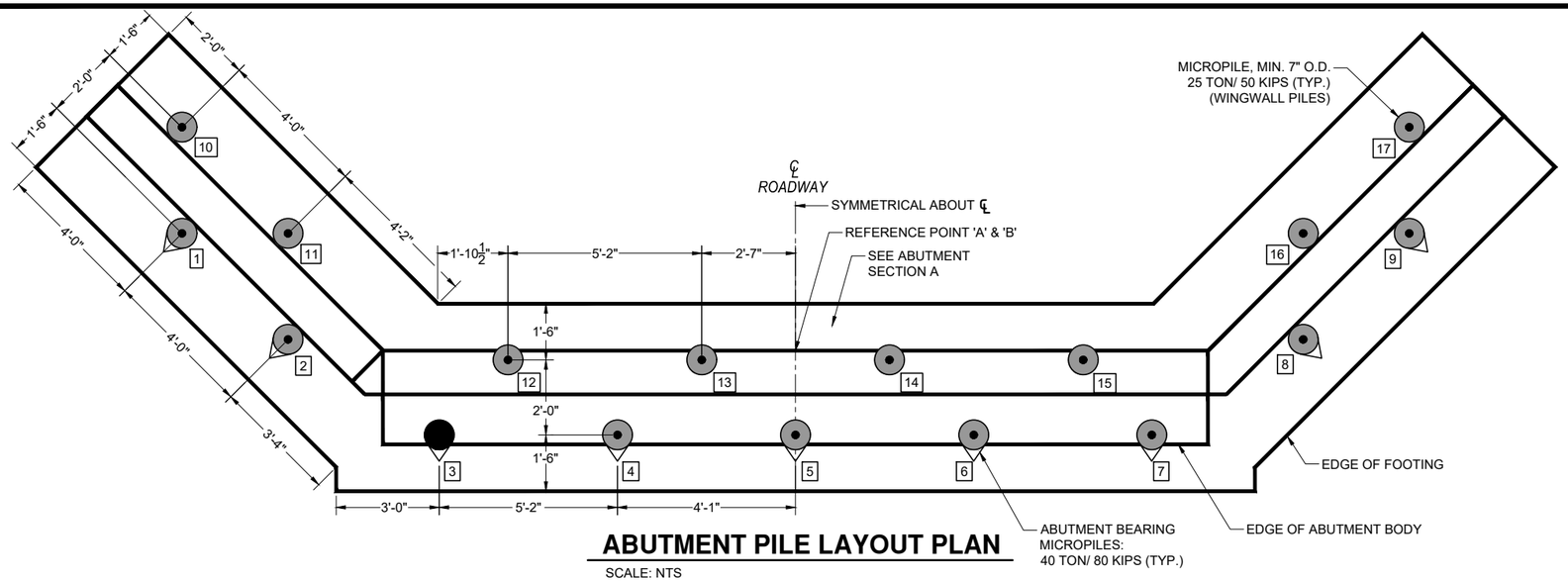


## ABUTMENT PILE LAYOUT PLAN

SCALE: NTS

| 80 KIP CAPACITY 7"Ø ABUTMENT MICROPILES, 50 KIP CAPACITY 7"Ø WINGWALL MICROPILES | | | | | | |
|---|---|---|---|---|---|---|
| LOCATION | PILE TYPE | NUMBER OF PILES | EST. LENGTH FURN. & DRILLED | | CUT-OFF ELEV. | EST. TIP ELEV. |
| | | | EACH LFT | TOTAL LFT | | |
| WEST ABUTMENT | VERTICAL | 4 | 27.00 | 108.00 | 1312.50 | 1285.50 |
| | BATTERED | 4 | 25.00 | 100.00 | 1312.50 | 1287.50 |
| | PROOF | 1 | 32.00 | 32.00 | 1312.50 | 1280.50 |
| WEST ABUTMENT WINGWALLS | VERTICAL | 4 | 10.00 | 40.00 | 1312.50 | 1302.50 |
| | BATTERED | 4 | 15.00 | 60.00 | 1312.50 | 1297.50 |
| | | | TOTAL | 340.00 | | |
| | | | ROUNDED | 340.0 | | |

| 80 KIP CAPACITY 7"Ø ABUTMENT MICROPILES, 50 KIP CAPACITY 7"Ø WINGWALL MICROPILES | | | | | | |
|---|---|---|---|---|---|---|
| LOCATION | PILE TYPE | NUMBER OF PILES | EST. LENGTH FURN. & DRILLED | | CUT-OFF ELEV. | EST. TIP ELEV. |
| | | | EACH LFT | TOTAL LFT | | |
| EAST ABUTMENT | VERTICAL | 4 | 27.00 | 108.00 | 1312.73 | 1285.73 |
| | BATTERED | 4 | 25.00 | 100.00 | 1312.73 | 1287.73 |
| | PROOF | 1 | 32.00 | 32.00 | 1312.73 | 1280.73 |
| EAST ABUTMENT WINGWALLS | VERTICAL | 4 | 10.00 | 40.00 | 1312.73 | 1302.73 |
| | BATTERED | 4 | 15.00 | 60.00 | 1312.73 | 1297.73 |
| | | | TOTAL | 340.00 | | |
| | | | ROUNDED | 340.0 | | |

| W. ABUTMENT MICROPILES COORDINATES | | |
|---|---|---|
| PILE NO. | NORTHING | EASTING |
| 1 | 548495.3238 | 1074783.5983 |
| 2 | 548495.4075 | 1074787.5975 |
| 3 | 548496.5583 | 1074792.2263 |
| 4 | 548499.9866 | 1074795.5141 |
| 5 | 548503.4149 | 1074798.8017 |
| 6 | 548506.8431 | 1074802.0895 |
| 7 | 548510.2714 | 1074805.3773 |
| 8 | 548514.9439 | 1074806.3329 |
| 9 | 548518.9430 | 1074806.2492 |
| 10 | 548497.2816 | 1074781.5569 |
| 11 | 548497.3652 | 1074785.5561 |
| 12 | 548499.2057 | 1074791.9941 |
| 13 | 548502.9345 | 1074795.5704 |
| 14 | 548506.6635 | 1074799.1465 |
| 15 | 548510.3927 | 1074802.7224 |
| 16 | 548516.9016 | 1074804.2915 |
| 17 | 548520.9007 | 1074804.2078 |

| E. ABUTMENT MICROPILES COORDINATES | | |
|---|---|---|
| PILE NO. | NORTHING | EASTING |
| 1 | 548480.0120 | 1074846.8444 |
| 2 | 548479.9283 | 1074842.8453 |
| 3 | 548478.7779 | 1074838.2170 |
| 4 | 548475.3496 | 1074834.9293 |
| 5 | 548471.9194 | 1074831.6392 |
| 6 | 548468.4931 | 1074828.3538 |
| 7 | 548465.0648 | 1074825.0661 |
| 8 | 548460.3920 | 1074824.1099 |
| 9 | 548456.3928 | 1074824.1936 |
| 10 | 548478.0543 | 1074848.8858 |
| 11 | 548477.9706 | 1074844.8867 |
| 12 | 548476.1306 | 1074838.4491 |
| 13 | 548472.4018 | 1074834.8728 |
| 14 | 548468.6728 | 1074831.2967 |
| 15 | 548464.9437 | 1074827.7208 |
| 16 | 548458.4343 | 1074826.1513 |
| 17 | 548454.4351 | 1074826.2350 |

## NOTES:

- DENOTES VERTICAL PILE.
- DENOTES BATTERED PILE
- DENOTES PROOF LOAD TEST PILE.

1. FACTORED NOMINAL VERTICAL RESISTANCE OF THE ABUTMENT MICROPILES SHALL BE 80 KIPS.
2. ALL PILES SHALL BE INSTALLED TO THE ESTIMATED BOTTOM OF SHAFT ELEVATION.
3. BATTERED PILES FOR ABUTMENTS SHALL BE INSTALLED TO A 4V:1H BATTER ANGLE.
4. PILES ARE TO BE INSTALL TO SUCH ACCURACY THAT THE CONSTRUCTION TOLERANCES IN THE SPECIAL PROVISIONS HAVE BEEN MET.
5. PILES SHALL BE CLOSELY INSPECTED/MONITORED DURING INSTALLATION TO ENSURE ADEQUATE STRUCTURAL INTEGRITY. CONTRACTOR SHALL BE RESPONSIBLE FOR REPLACING ANY PILES THE C.O. DEEMS DAMAGED.
6. THE STEEL CASING SHALL BE A MINIMUM OF 0.5" NOMINAL WALL THICKNESS (N-80), 7" O.D. AND HAVE A MINIMUM YIELD STRESS OF 80 KSI.
7. THE MICROPILE REINFORCING BAR SHALL BE AN EPOXY COATED #18 BAR GRADE 75 WILLIAMS ALL-THREAD REBAR (OR EQUIVALENT) CONFORMING TO ASTM A-615. LENGTH OF COUPLE BAR SECTIONS SHALL BE DETERMINED BASED ON THE OVERHEAD CLEARANCE AVAILABLE AT EACH PILE LOCATION.
8. THE MICROPILE REINFORCING BARS ARE NOT PAID FOR SEPARATELY, BUT INCLUDED IN THE BID ITEM "MICROPILE" OR "MICROPILE, LOAD TEST".
9. FURNISH ASTM A572 GRADE 50 STEEL BEARING PLATES AND SIDE STIFFENERS. STEEL SHALL NOT BE PAID FOR SEPARATELY, BUT INCLUDED IN THE BID ITEM "MICROPILE" OR "MICROPILE, LOAD TEST".

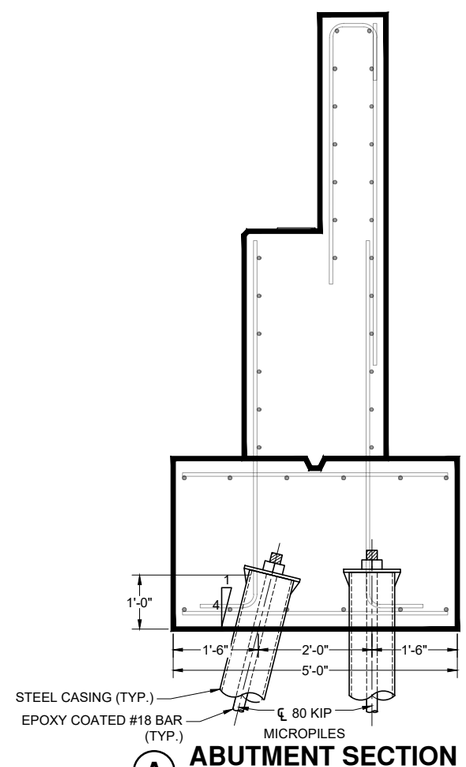


## A ABUTMENT SECTION

SCALE: NTS

United States Department of Agriculture
Forest Service

EASTERN REGION

PROJECT NAME

**ROB BROOK ROAD BRIDGE REPLACEMENT FR 35 MP 0.1**

**WHITE MOUNTAIN NATIONAL FOREST**

**SACO RANGER DISTRICT**

DRAWING TITLE

**MICROPILE LAYOUT PLAN**

DATE
7/18/2023

ARCHIVE NO.

DESIGNER
D.CARTER

DRAWN
J.ALLEN

CHECKED
G.JUNTTILA

PROJECT NO.
U28-02592

DWG SHEET NO.
C-10

SHEET 10 OF 17

7/18/23 15:54 JALLEN Z:\U28-02592 USDA FS R9 TST-USFS BRIDGE IDIQ - 21 BRIDGES\BIDSET\TASK 102 - WMNF ROB BROOK\100 PERCENT DOCS - FINAL\FR 35-0.1 DOUGLAS BROOK.DWG;

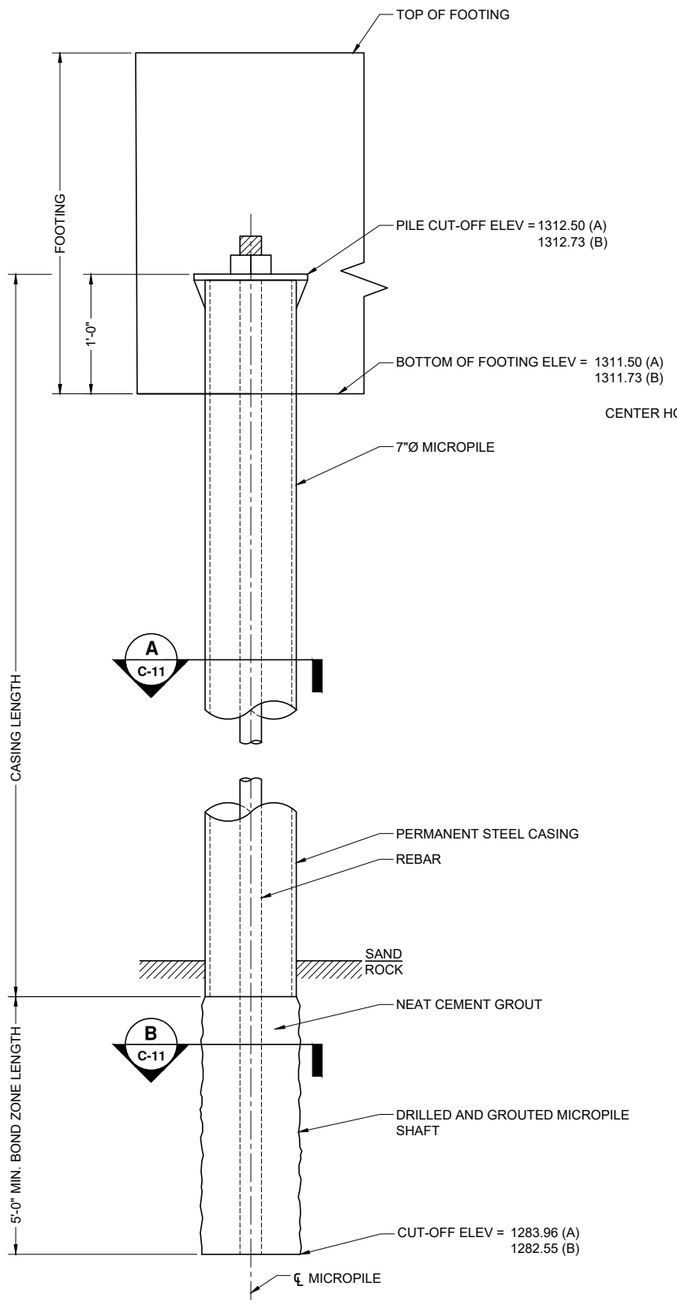


## MICROPILE ELEVATION

SCALE: NTS

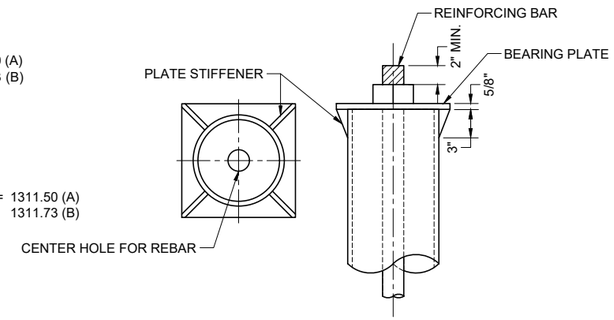


## MICROPILE DETAIL

SCALE: NTS

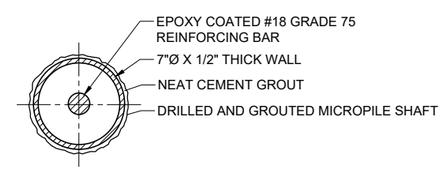


## A MICROPILE SECTION

SCALE: NTS

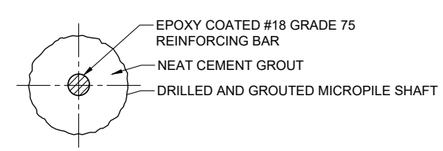


## B MICROPILE SECTION

SCALE: NTS

United States Department of Agriculture
Forest Service

EASTERN REGION

PROJECT NAME

**ROB BROOK ROAD BRIDGE REPLACEMENT FR 35 MP 0.1**

**WHITE MOUNTAIN NATIONAL FOREST**

**SACO RANGER DISTRICT**

DRAWING TITLE

**MICROPILE DETAILS**

| | |
|---|---|
| DATE 7/18/2023 | |
| ARCHIVE NO. | |
| DESIGNER D.CARTER | DWG SHEET NO. C-11 |
| DRAWN J.ALLEN | |
| CHECKED G.JUNTTILA | SHEET 11 OF 17 |
| PROJECT NO. U28-02592 | |

7/18/23 11:14 JALLEN Z:\U28-02592 USDA FS R9 TST-USFS BRIDGE IDIQ - 21 BRIDGES\BIDSET\TASK 102 - WMNF ROB BROOK\100 PERCENT DOCS - FINAL\FR 35-0.1 DOUGLAS BROOK.DWG;

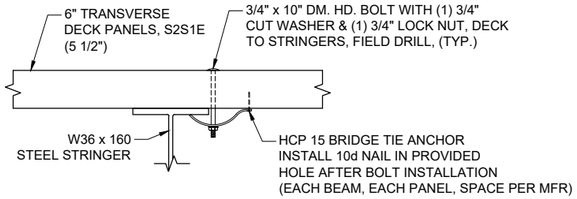


## DECK CONNECTION @ STEEL BEAMS

SCALE: NTS

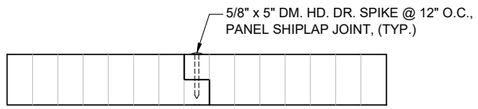


## PANEL CONNECTION DETAIL

SCALE: NTS

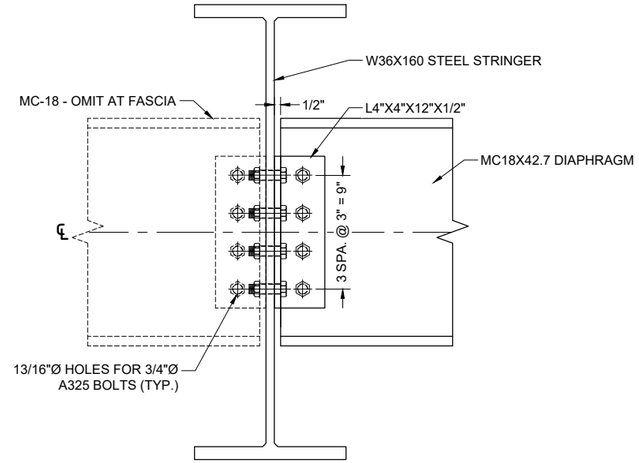


## DIAPHRAGM CONNECTION

SCALE: NTS

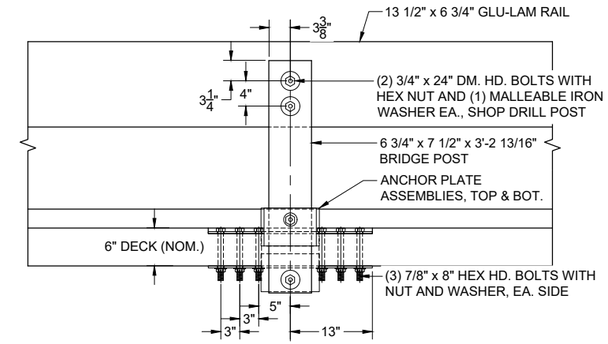


## SECTION A-A

SCALE: NTS

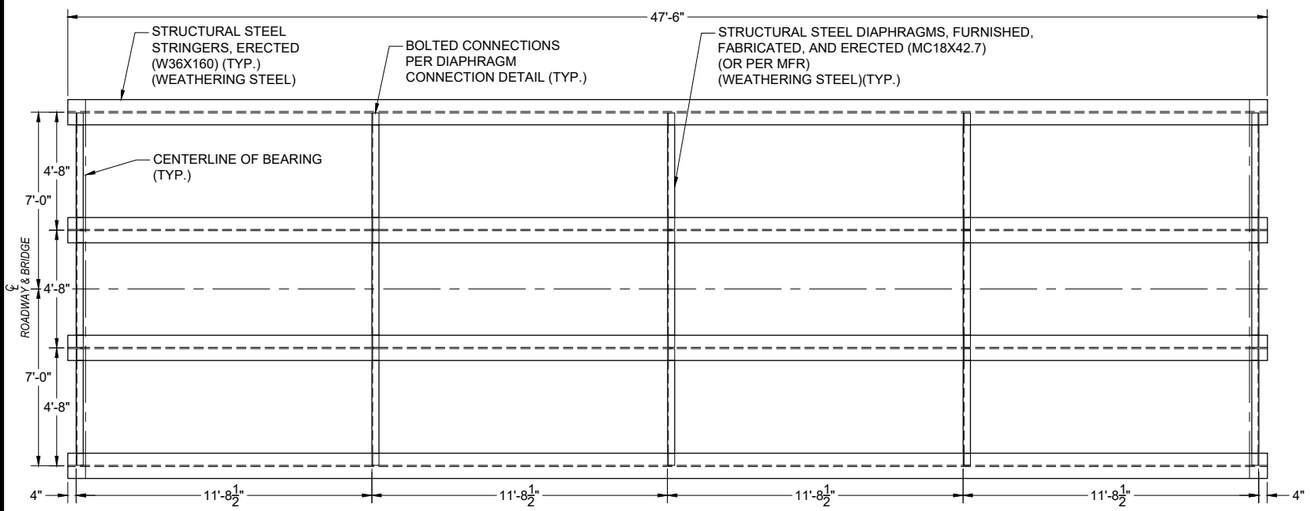


## BEAM & DIAPHRAGM PLAN

SCALE: NTS

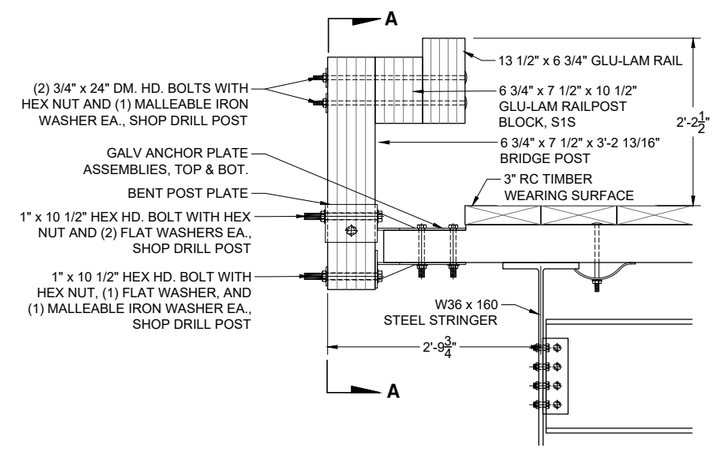


## (B) SECTION AT RAILPOST

SCALE: NTS

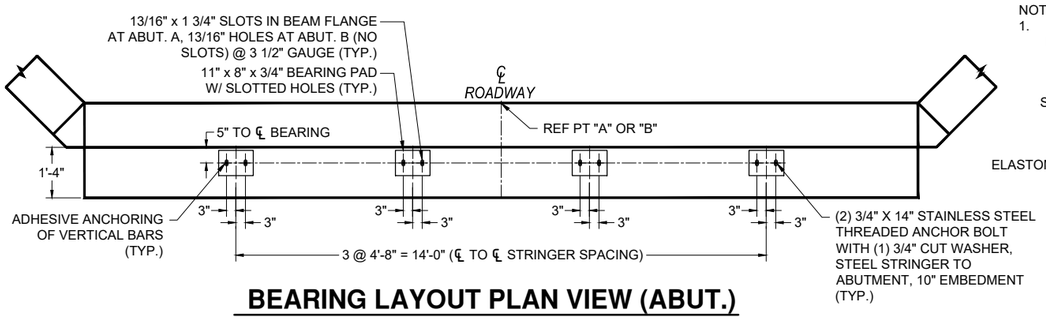


## BEARING LAYOUT PLAN VIEW (ABUT.)

SCALE: NTS

NOTE:
1. 50 DUROMETER RUBBER (MIN)

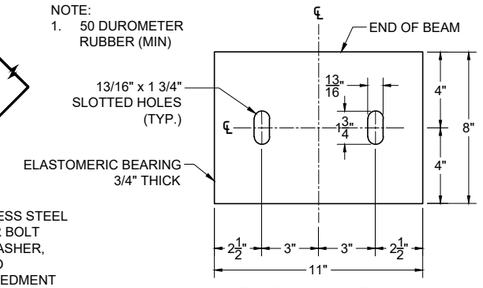


## PLAIN ELASTOMERIC BEARING PAD

SCALE: NTS

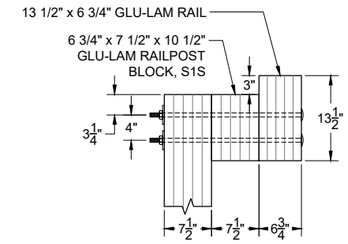


## DETAIL AT RAILPOST

SCALE: NTS

USDA FOREST SERVICE

United States Department of Agriculture
Forest Service

EASTERN REGION

PROJECT NAME

**ROB BROOK ROAD BRIDGE REPLACEMENT FR 35 MP 0.1**

**WHITE MOUNTAIN NATIONAL FOREST**

**SACO RANGER DISTRICT**

DRAWING TITLE

**STRUCTURE DETAILS**

| | |
|---|---|
| DATE 7/18/2023 | |
| ARCHIVE NO. | |
| DESIGNER D.CARTER | DWG SHEET NO. C-12 |
| DRAWN J.ALLEN | |
| CHECKED G.JUNTTILA | SHEET 12 OF 17 |
| PROJECT NO. U28-02592 | |

7/18/23 11:14 JALLEN Z:\U28-02592 USDA FS R9 TST-USFS BRIDGE IDIQ - 21 BRIDGES\BIDSET\TASK 102 - WMNF ROB BROOK\100 PERCENT DOCS - FINAL\FR 35-0.1 DOUGLAS BROOK.DWG;

# REINFORCEMENT

### WEST ABUTMENT

| BAR | DIMENSIONS | | | ANGLE | | NO. REQ'D | TOTAL WT. | LOCATION |
|---|---|---|---|---|---|---|---|---|
| | a | b | c | α | β | | | |
| EA060501 | 5'-1" | | | | | 27 | 206 | ABUT BODY, VERT, BF |
| ED060605 | 4'-7" | 0'-10" | 1'-0" | 90 | 90 | 27 | 260 | BACKWALL, TOP STIRRUP |
| EA052108 | 21'-8" | | | | | 25 | 565 | ABUT BODY & BACKWALL, HORIZ, BF & FF |
| EB050202 | 1'-1" | 1'-1" | | 135 | | 4 | 9 | ABUT BODY INTO WW, FF & BF |
| EB050304 | 1'-7" | 1'-7" | | 135 | | 22 | 76 | ABUT BODY INTO WW, FF |
| EB050408 | 2'-4" | 2'-4" | | 135 | | 22 | 107 | ABUT BODY INTO WW, BF |
| EB060705 | 6'-5" | 1'-0" | | 90 | | 54 | 601 | ABUT FOOTING DOWELS, FF & BF |
| EA060408 | 4'-8" | | | | | 50 | 350 | ABUT FOOTING, TRANSVERSE |
| EA062400 | 24'-0" | | | | | 12 | 433 | ABUT FOOTING, LONGIT |
| EA060705 | 7'-5" | | | | | 4 | 45 | WW STEM, VERT, FF & BF |
| EA060703 | 7'-3" | | | | | 4 | 44 | WW STEM, VERT, FF & BF |
| EA060700 | 7'-0" | | | | | 4 | 42 | WW STEM, VERT, FF & BF |
| EA060609 | 6'-9" | | | | | 4 | 41 | WW STEM, VERT, FF & BF |
| EA060606 | 6'-6" | | | | | 4 | 39 | WW STEM, VERT, FF & BF |
| EA060603 | 6'-3" | | | | | 4 | 38 | WW STEM, VERT, FF & BF |
| EA060600 | 6'-0" | | | | | 4 | 36 | WW STEM, VERT, FF & BF |
| EA060509 | 5'-9" | | | | | 4 | 35 | WW STEM, VERT, FF & BF |
| EA060506 | 5'-6" | | | | | 4 | 33 | WW STEM, VERT, FF & BF |
| EA060503 | 5'-3" | | | | | 4 | 32 | WW STEM, VERT, FF & BF |
| EA060500 | 5'-0" | | | | | 4 | 30 | WW STEM, VERT, FF & BF |
| EA060409 | 4'-9" | | | | | 4 | 29 | WW STEM, VERT, FF & BF |
| EA060406 | 4'-6" | | | | | 4 | 27 | WW STEM, VERT, FF & BF |
| EA041004 | 10'-4" | | | | | 4 | 28 | WW STEM, HORIZ, FF & BF |
| EA040108 | 1'-8" | | | | | 4 | 4 | WW STEM, HORIZ, FF & BF |
| EA040500 | 5'-0" | | | | | 4 | 13 | WW STEM, HORIZ, FF & BF |
| EA040804 | 8'-4" | | | | | 4 | 22 | WW STEM, HORIZ, FF & BF |
| EA041002 | 10'-2" | | | | | 20 | 136 | WW STEM, HORIZ, FF & BF |
| EB060705 | 6'-5" | 1'-0" | | 90 | | 52 | 592 | WW FOOTING DOWELS |
| EA041004 | 10'-4" | | | | | 24 | 403 | WW FOOTING, LONGIT |
| EA040503 | 5'-3" | | | | | 48 | 336 | WW FOOTING, TRANSVERSE |
| | | | | | | | 4612 | |

### EAST ABUTMENT

| BAR | DIMENSIONS | | | ANGLE | | NO. REQ'D | TOTAL WT. | LOCATION |
|---|---|---|---|---|---|---|---|---|
| | a | b | c | α | β | | | |
| EA060501 | 5'-1" | | | | | 27 | 206 | ABUT BODY, VERT, BF |
| ED060605 | 4'-7" | 0'-10" | 1'-0" | 90 | 90 | 27 | 260 | BACKWALL, TOP STIRRUP |
| EA052108 | 21'-8" | | | | | 25 | 565 | ABUT BODY & BACKWALL, HORIZ, BF & FF |
| EB050202 | 1'-1" | 1'-1" | | 135 | | 4 | 9 | ABUT BODY INTO WW, FF & BF |
| EB050304 | 1'-7" | 1'-7" | | 135 | | 22 | 76 | ABUT BODY INTO WW, FF |
| EB050408 | 2'-4" | 2'-4" | | 135 | | 22 | 107 | ABUT BODY INTO WW, BF |
| EB060705 | 6'-5" | 1'-0" | | 90 | | 54 | 601 | ABUT FOOTING DOWELS, FF & BF |
| EA060408 | 4'-8" | | | | | 50 | 350 | ABUT FOOTING, TRANSVERSE |
| EA062400 | 24'-0" | | | | | 12 | 433 | ABUT FOOTING, LONGIT |
| EA060705 | 7'-5" | | | | | 4 | 45 | WW STEM, VERT, FF & BF |
| EA060703 | 7'-3" | | | | | 4 | 44 | WW STEM, VERT, FF & BF |
| EA060700 | 7'-0" | | | | | 4 | 42 | WW STEM, VERT, FF & BF |
| EA060609 | 6'-9" | | | | | 4 | 41 | WW STEM, VERT, FF & BF |
| EA060606 | 6'-6" | | | | | 4 | 39 | WW STEM, VERT, FF & BF |
| EA060603 | 6'-3" | | | | | 4 | 38 | WW STEM, VERT, FF & BF |
| EA060600 | 6'-0" | | | | | 4 | 36 | WW STEM, VERT, FF & BF |
| EA060509 | 5'-9" | | | | | 4 | 35 | WW STEM, VERT, FF & BF |
| EA060506 | 5'-6" | | | | | 4 | 33 | WW STEM, VERT, FF & BF |
| EA060503 | 5'-3" | | | | | 4 | 32 | WW STEM, VERT, FF & BF |
| EA060500 | 5'-0" | | | | | 4 | 30 | WW STEM, VERT, FF & BF |
| EA060409 | 4'-9" | | | | | 4 | 29 | WW STEM, VERT, FF & BF |
| EA060406 | 4'-6" | | | | | 4 | 27 | WW STEM, VERT, FF & BF |
| EA041004 | 10'-4" | | | | | 4 | 28 | WW STEM, HORIZ, FF & BF |
| EA040108 | 1'-8" | | | | | 4 | 4 | WW STEM, HORIZ, FF & BF |
| EA040500 | 5'-0" | | | | | 4 | 13 | WW STEM, HORIZ, FF & BF |
| EA040804 | 8'-4" | | | | | 4 | 22 | WW STEM, HORIZ, FF & BF |
| EA041002 | 10'-2" | | | | | 20 | 136 | WW STEM, HORIZ, FF & BF |
| EB060705 | 6'-5" | 1'-0" | | 90 | | 52 | 592 | WW FOOTING DOWELS |
| EA041004 | 10'-4" | | | | | 24 | 403 | WW FOOTING, LONGIT |
| EA040503 | 5'-3" | | | | | 48 | 336 | WW FOOTING, TRANSVERSE |
| | | | | | | | 4612 | |

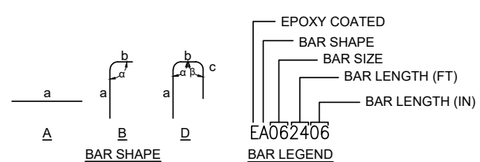


| REINFORCEMENT QUANTITIES | | |
|---|---|---|
| DESCRIPTION | UNITS | QUANTITY |
| EPOXY COATED REINFORCING STEEL | LBS | 9224 |

United States Department of Agriculture
Forest Service

EASTERN REGION

PROJECT NAME

ROB BROOK ROAD
BRIDGE REPLACEMENT
FR 35 MP 0.1

WHITE MOUNTAIN
NATIONAL FOREST

SACO
RANGER DISTRICT

DRAWING TITLE

REINFORCEMENT

DATE
7/18/2023

ARCHIVE NO.

DESIGNER
D.CARTER

DRAWN
J.ALLEN

CHECKED
G.JUNTTILA

PROJECT NO.
U28-02592

DWG SHEET NO.
C-13

SHEET 13 OF 17

7/18/23 11:14 JALLEN Z:\U28-02592 USDA FS R9 TST-USFS BRIDGE IDIQ - 21 BRIDGES\BIDSET\TASK 102 - WMNF ROB BROOK\100 PERCENT DOCS - FINAL\FR 35-0.1 DOUGLAS BROOK.DWG;

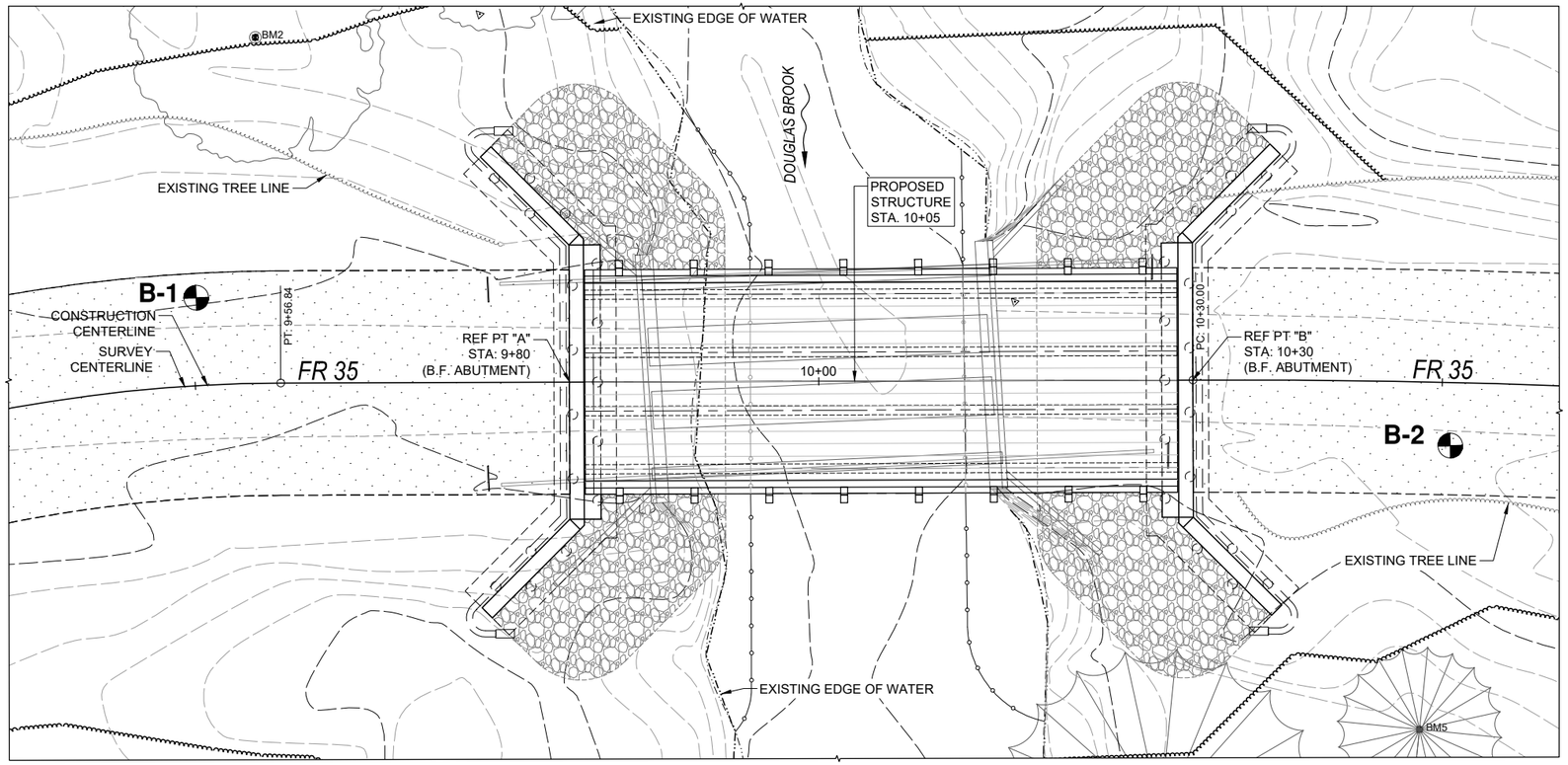


## SOIL BORINGS BY:

S. W. COLE ENGINEERING, INC.
10 CENTRE ROAD
SOMERSWORTH, NEW HAMPSHIRE 03878
BORING DATES: DECEMBER 9, 2022

NUMBER IN CIRCLES DENOTE THE 'N' VALUE IN BLOWS PER FOOT BY USING A 4 1/2" O.D. SPLIT SPOON SAMPLER AND A 140 POUND HAMMER FALLING 30". WATER LEVELS MAY BE INFLUENCED BY RESIDUAL BORING WATER..

THE SOIL BORING LOGS REPRESENT POINT INFORMATION. PRESENTATION OF THIS INFORMATION IN NO WAY IMPLIES THAT SUB-SURFACE CONDITIONS ARE THE SAME AT LOCATIONS OTHER THAN THE EXACT LOCATION OF THE BORING.

TOTAL SCOUR DEPTH SHOWN ON BORINGS IS AS CALCULATED BY UPEA WITH HEC-RAS SOFTWARE BASED ON CONDITIONS WITHOUT THE RIPRAP SCOUR COUNTERMEASURES SHOWN WITHIN THIS PLAN.

B.O.F. - BOTTOM OF FOOTING

M.P.P. - MINIMUM PILE PENETRATION ELEVATION

E.P.P. - ESTIMATED PILE PENETRATION ELEVATION

T.S. - TOTAL SCOUR

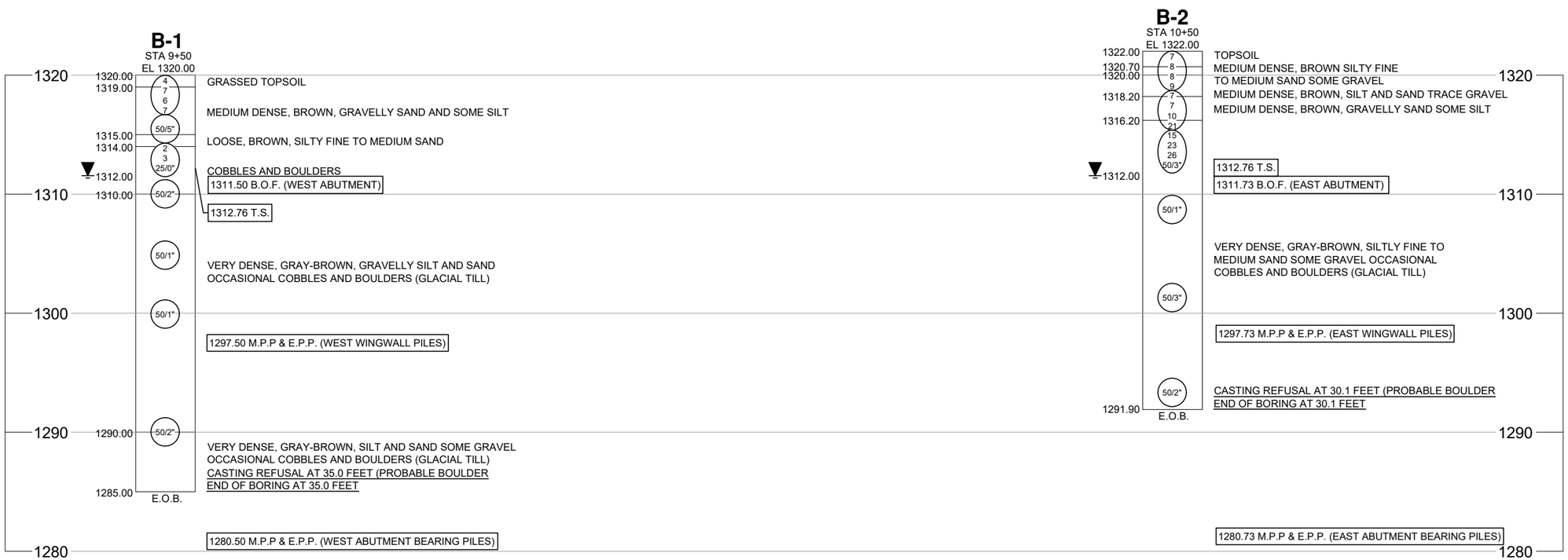


United States Department of Agriculture
Forest Service

EASTERN REGION

PROJECT NAME

**ROB BROOK ROAD BRIDGE REPLACEMENT FR 35 MP 0.1**

**WHITE MOUNTAIN NATIONAL FOREST**

**SACO RANGER DISTRICT**

DRAWING TITLE

**SOIL BORINGS**

| | |
|---|---|
| DATE 7/18/2023 | |
| ARCHIVE NO. | |
| DESIGNER D.CARTER | DWG SHEET NO. C-14 |
| DRAWN J.ALLEN | |
| CHECKED G.JUNTTILA | SHEET 14 OF 17 |
| PROJECT NO. U28-02592 | |

7/18/23 15:40 JALLEN Z:\U28-02592 USDA FS R9 TST-USFS BRIDGE IDIQ - 21 BRIDGES\BIDSET\TASK 102 - WMNF ROB BROOK\100 PERCENT DOCS - FINAL\FR 35-0.1 DOUGLAS BROOK.DWG;

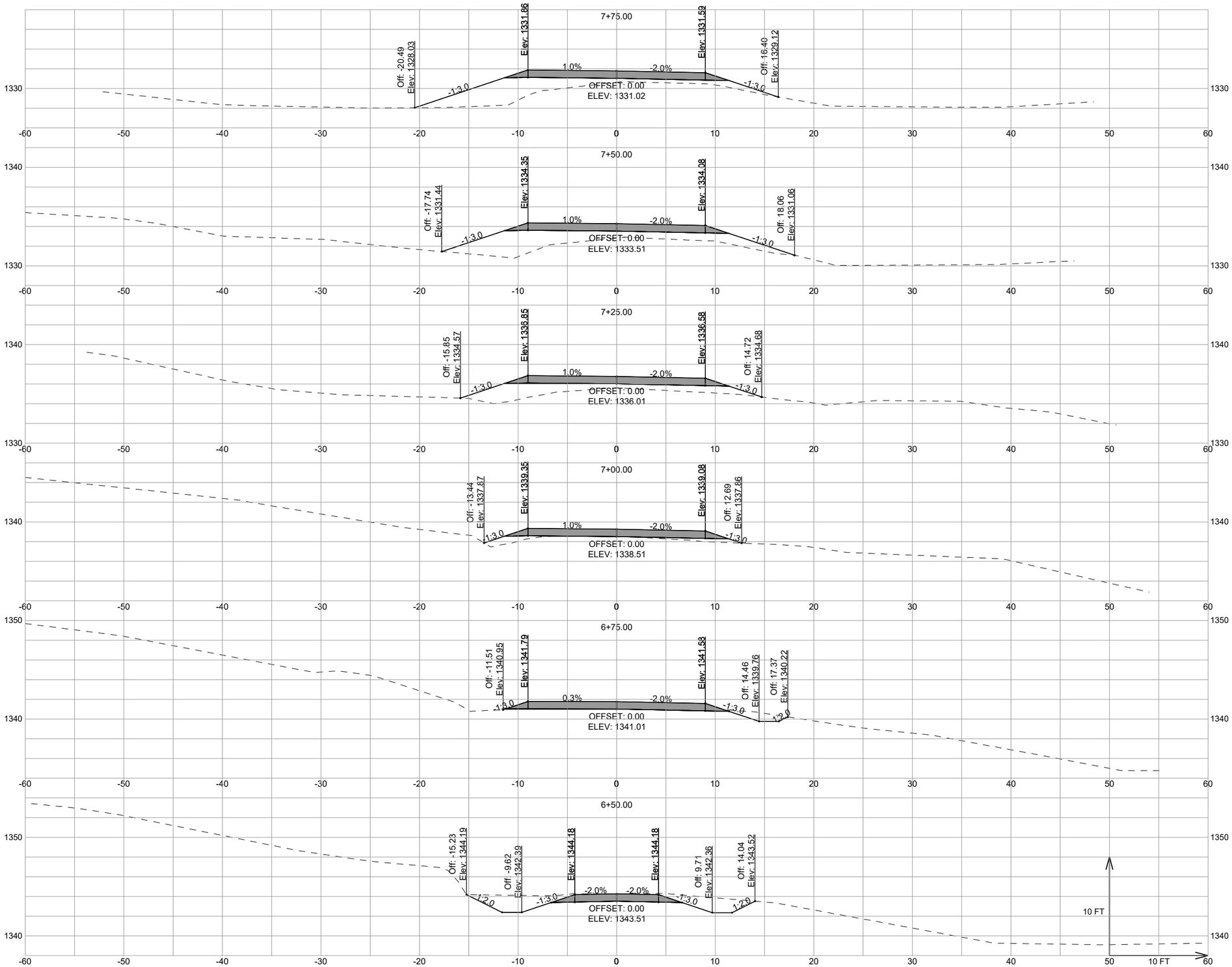


United States Department of Agriculture
Forest Service

EASTERN REGION

PROJECT NAME

**ROB BROOK ROAD BRIDGE REPLACEMENT FR 35 MP 0.1**

**WHITE MOUNTAIN NATIONAL FOREST**

**SACO RANGER DISTRICT**

DRAWING TITLE

**CROSS SECTIONS**

| | |
|---|---|
| DATE 7/18/2023 | |
| ARCHIVE NO. | |
| DESIGNER D.CARTER | DWG SHEET NO. C-15 |
| DRAWN J.ALLEN | |
| CHECKED G.JUNTTILA | SHEET 15 OF 17 |
| PROJECT NO. U28-02592 | |

7/18/23 11:14 JALLEN Z:\U28-02592 USDA FS R9 TST-USFS BRIDGE IDIQ - 21 BRIDGES\BIDSET\TASK 102 - WMNF ROB BROOK\100 PERCENT DOCS - FINAL\FR 35-0.1 DOUGLAS BROOK.DWG;

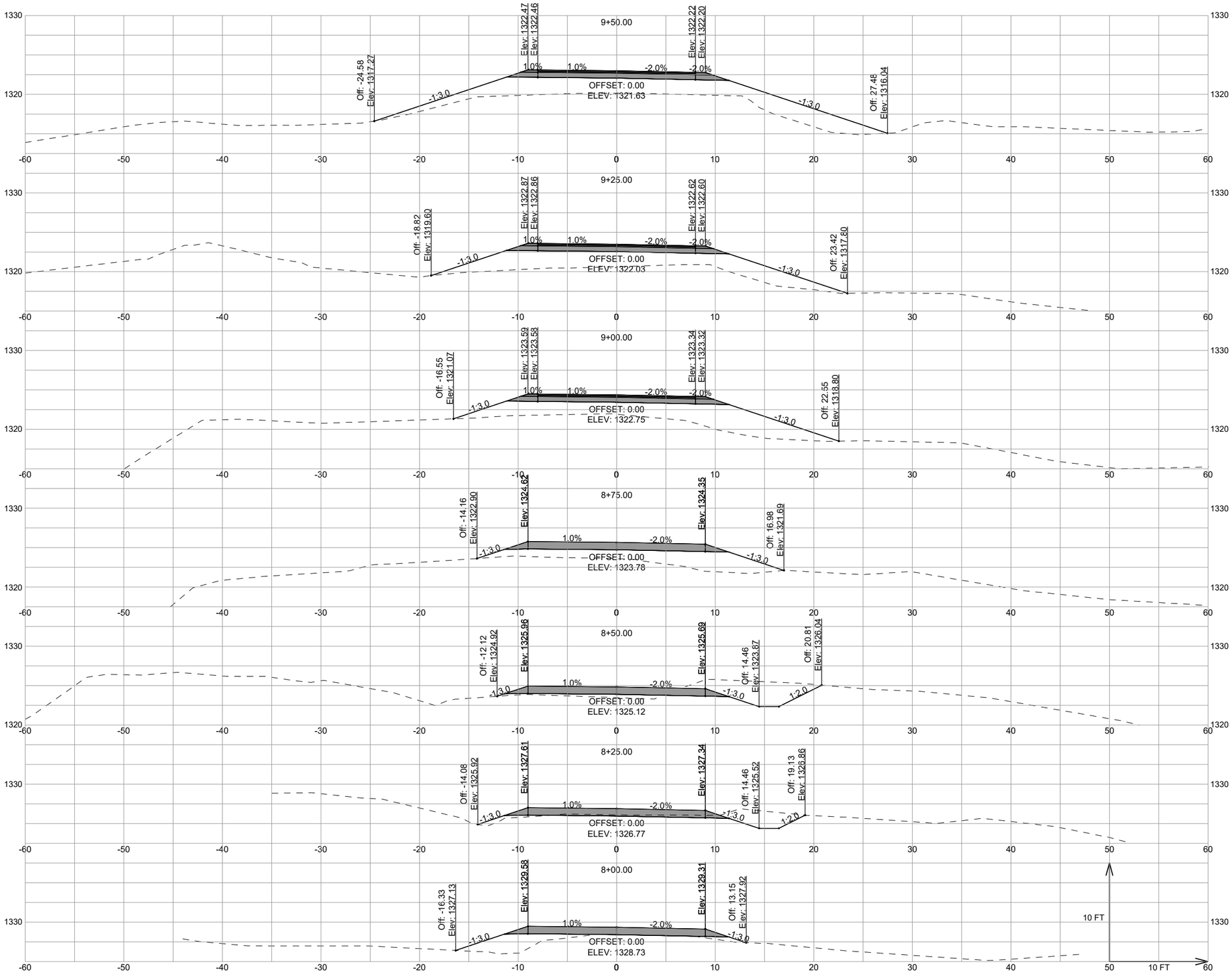


United States Department of Agriculture
Forest Service

EASTERN REGION

PROJECT NAME

**ROB BROOK ROAD BRIDGE REPLACEMENT FR 35 MP 0.1**

**WHITE MOUNTAIN NATIONAL FOREST**

**SACO RANGER DISTRICT**

DRAWING TITLE

**CROSS SECTIONS**

| | |
|---|---|
| DATE 7/18/2023 | |
| ARCHIVE NO. | |
| DESIGNER D.CARTER | DWG SHEET NO. C-16 |
| DRAWN J.ALLEN | |
| CHECKED G.JUNTTILA | SHEET 16 OF 17 |
| PROJECT NO. U28-02592 | |

7/18/23 11:14 JALLEN Z:\U28-02592 USDA FS R9 TST-USFS BRIDGE IDIQ - 21 BRIDGES\BIDSET\TASK 102 - WMNF ROB BROOK\100 PERCENT DOCS - FINAL\FR 35-0.1 DOUGLAS BROOK.DWG;

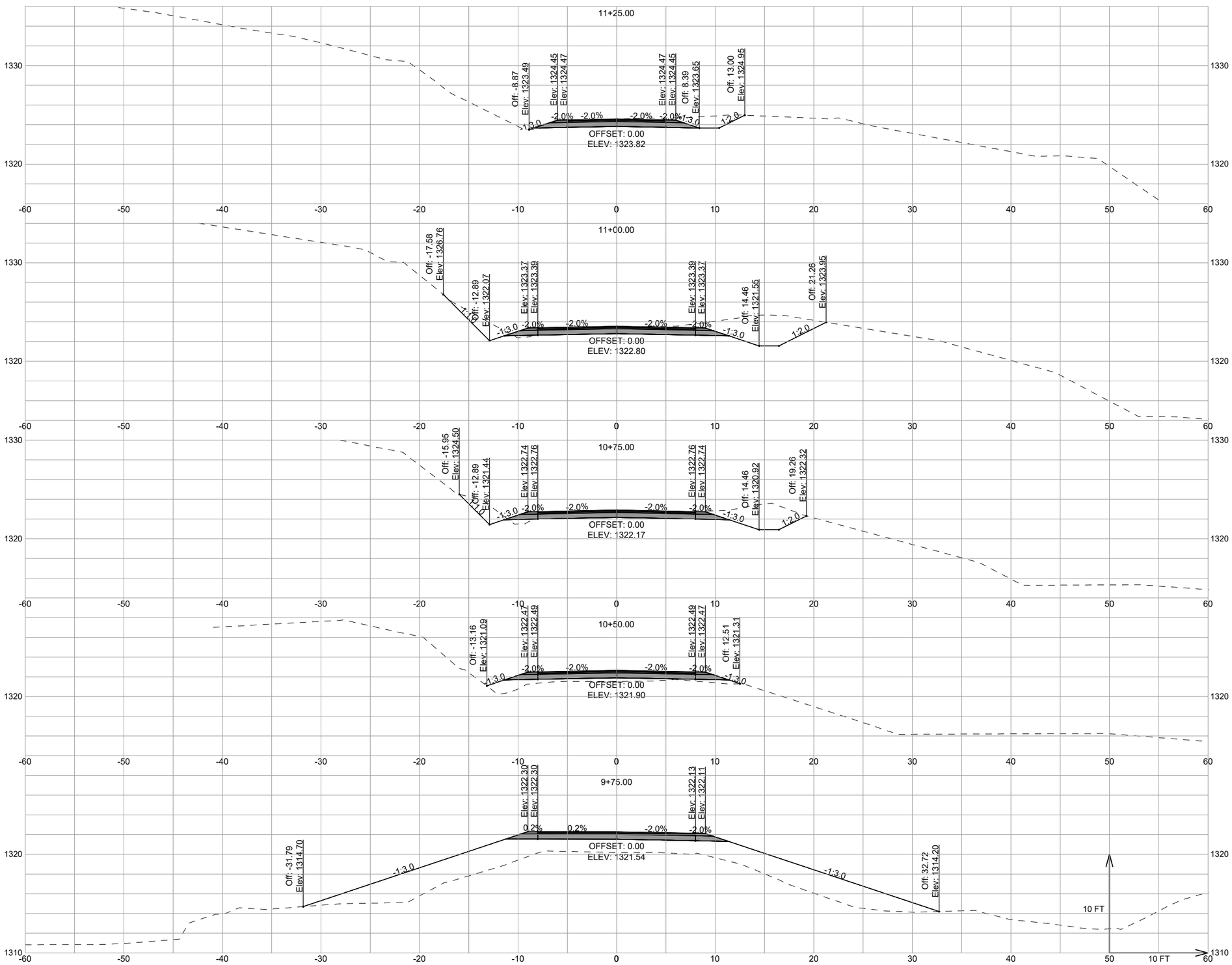


United States Department of Agriculture
Forest Service

EASTERN REGION

PROJECT NAME

**ROB BROOK ROAD BRIDGE REPLACEMENT FR 35 MP 0.1**

**WHITE MOUNTAIN NATIONAL FOREST**

**SACO RANGER DISTRICT**

DRAWING TITLE

**CROSS SECTIONS**

| | |
|---|---|
| DATE 7/18/2023 | |
| ARCHIVE NO. | |
| DESIGNER D.CARTER | DWG SHEET NO. C-17 |
| DRAWN J.ALLEN | |
| CHECKED G.JUNTTILA | SHEET 17 OF 17 |
| PROJECT NO. U28-02592 | |

7/18/23 11:14 JALLEN Z:\U28-02592 USDA FS R9 TST-USFS BRIDGE IDIQ - 21 BRIDGES\BIDSET\TASK 102 - WMNF ROB BROOK\100 PERCENT DOCS - FINAL\FR 35-0.1 DOUGLAS BROOK.DWG;