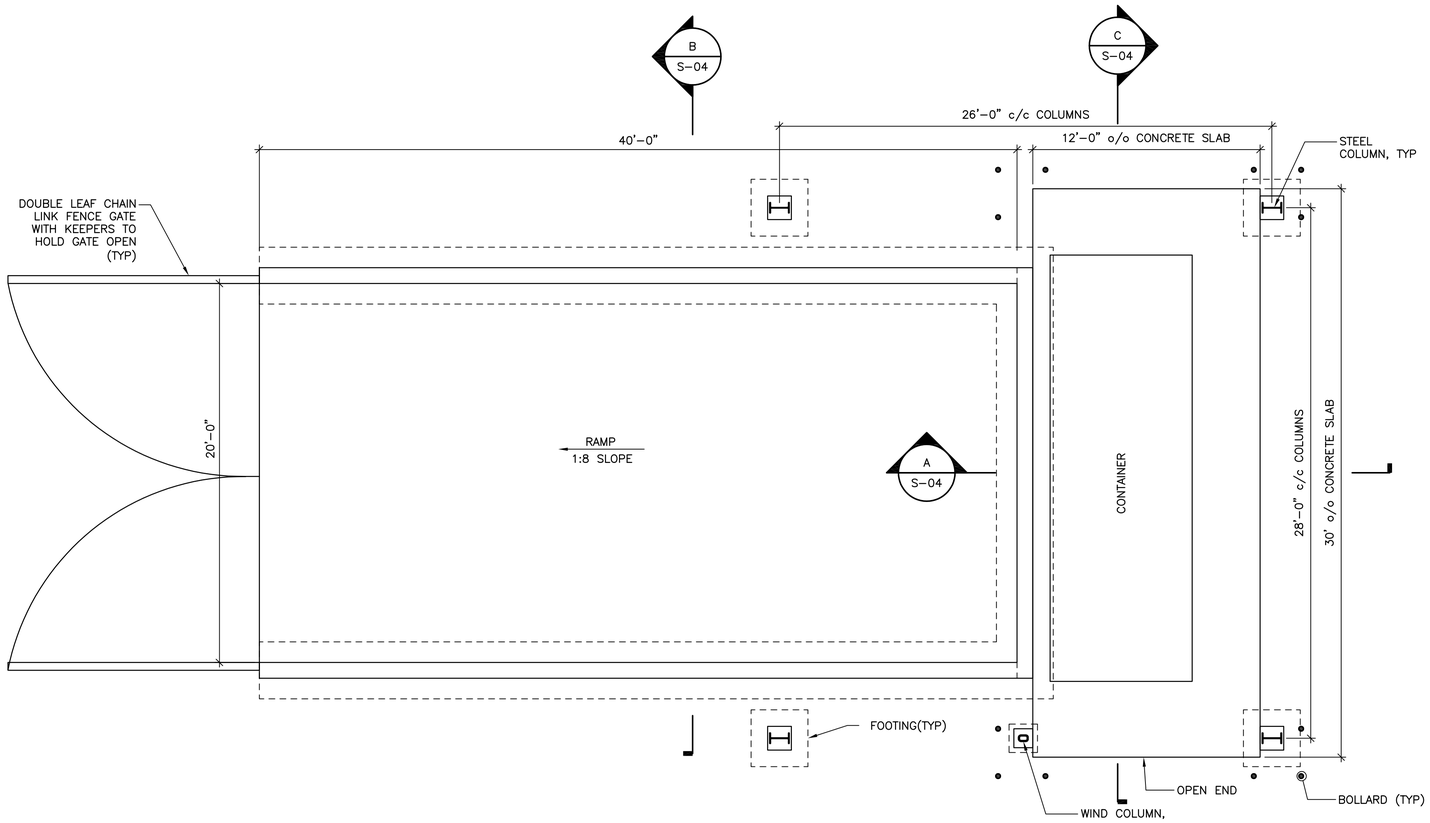

NEW ROLL-OFF FACILITY FOUNDATION PLAN

SCALE: 1/4"=1'-0"

0 2' 4' 8'

60% DESIGN SUBMITTAL - NOT FOR CONSTRUCTION

WARNING - IT IS A VIOLATION OF NEW YORK EDUCATION LAW, SECTION 7209.2, FOR ANY PERSON, UNLESS HE IS ACTING UNDER THE DIRECTION OF A LICENSED PROFESSIONAL ENGINEER OR LAND SURVEYOR, TO ALTER THIS DOCUMENT IN ANY WAY. IF ALTERED, THE ALTERING PERSON SHALL COMPLY WITH THE REQUIREMENTS OF NEW YORK LAW, SECTION 7209.2.

US Army Corps of Engineers ®

MARK	DESCRIPTION	DATE

DESIGNED BY:	XXXXXXX
DRAWN BY:	XXXXXXX
CHECKED BY:	T. MINEHARDT
SUBMITTED BY:	A. MITCHUNS
SIZE:	ANSI D
ISSUE DATE:	MAY 2020
SOLICITATION NO.:	XXXXXXX
CONTRACT NO.:	W912DR18D0004
##########	##########

U.S. ARMY CORPS OF ENGINEERS
NEW YORK DISTRICT
26 FEDERAL PLAZA
NEW YORK, NEW YORK 10278

ARCADIS OF NEW YORK, INC.
855 ROUTE 146, SUITE 210
CLIFTON PARK, NEW YORK 12065

WATERVLIET ARSENAL
UST-AST DESIGN PROJECT

NEW ROLL OFF FACILITY FOUNDATION PLAN

SHEET ID
S-03

49 OF 71

60% DESIGN

USER: AS900799 FILENAME: C:\USERS\AS900799\ARCADIS\WATERVLIET ARSENAL DESIGN PROJECTS - 5.3 - UST - AST\3 - DETAILED DESIGN\06_STRUCTURAL AND GEOTECH\STRUCTURALS-03, S-04.DWG SAVE DATE: 1/30/2021 12:38 AM PLOT DATE: 2/1/2021 1:01 PM

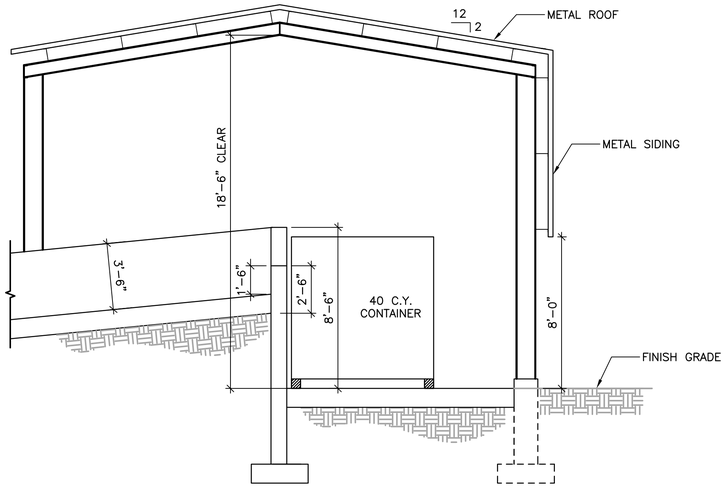

A S-03 SECTION

SCALE: 1/4"=1'-0"

0 2' 4' 8'

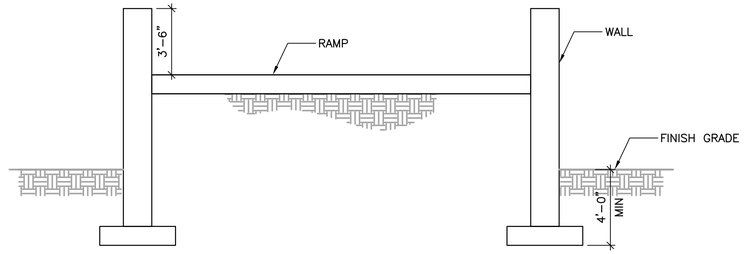

B S-03 SECTION

SCALE: 1/4"=1'-0"

0 2' 4' 8'

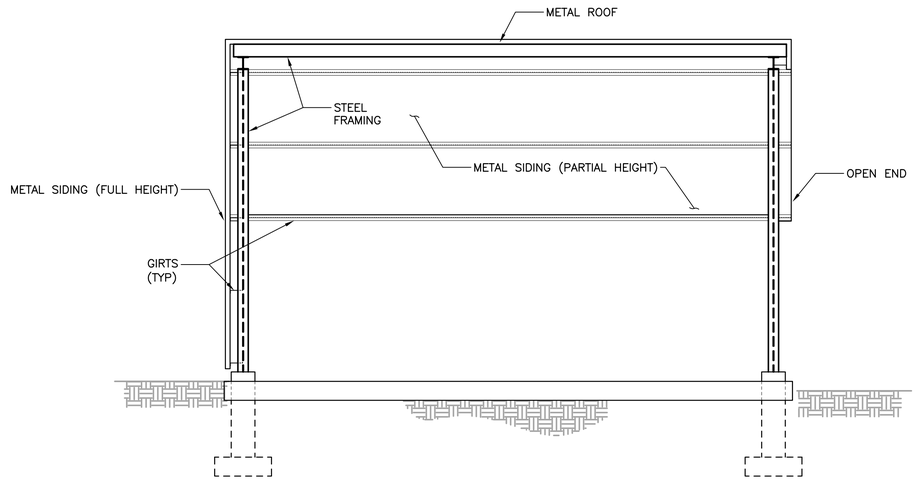

C S-03 SECTION

SCALE: 1/4"=1'-0"

0 2' 4' 8'

60% DESIGN SUBMITTAL - NOT FOR CONSTRUCTION

WARNING - IT IS A VIOLATION OF NEW YORK EDUCATION LAW, SECTION 7209.2, FOR ANY PERSON, UNLESS HE IS ACTING UNDER THE DIRECTION OF A LICENSED PROFESSIONAL ENGINEER OR LAND SURVEYOR, TO ALTER THIS DOCUMENT IN ANY WAY. IF ALTERED, THE ALTERING PERSON SHALL COMPLY WITH THE REQUIREMENTS OF NEW YORK LAW, SECTION 7209.2.

US Army Corps of Engineers ®

MARK	DESCRIPTION	DATE

DESIGNED BY:	XXXXXXX
DRAWN BY:	XXXXXXX
CHECKED BY:	T. MINEHARDT
SUBMITTED BY:	A. MITOLINS
SIZE:	ANSI D
ISSUE DATE:	MAY 2020
SOLICITATION NO.:	XXXXXXX
CONTRACT NO.:	W912DR18D0004
##########	##########

U.S. ARMY CORPS OF ENGINEERS
NEW YORK DISTRICT
26 FEDERAL PLAZA
NEW YORK, NEW YORK 10278

ARCADIS OF NEW YORK, INC.
855 ROUTE 146, SUITE 210
CLIFTON PARK, NEW YORK 12065

WATERVLIET ARSENAL
UST-AST DESIGN PROJECT

NEW ROLL OFF FACILITY SECTION AND DETAILS

SHEET ID
S-04

50 OF 71

60% DESIGN

USER: AS900799 FILENAME: C:\USERS\AS900799\ARCADIS\WATERVLIET ARSENAL DESIGN PROJECTS - 5.3 - UST - AST\3 - DETAILED DESIGN\06_STRUCTURAL AND GEOTECH\STRUCTURALS-03, S-04.DWG SAVE DATE: 2/1/2021 1:03 PM, PLOT DATE: 2/1/2021 8:11 PM

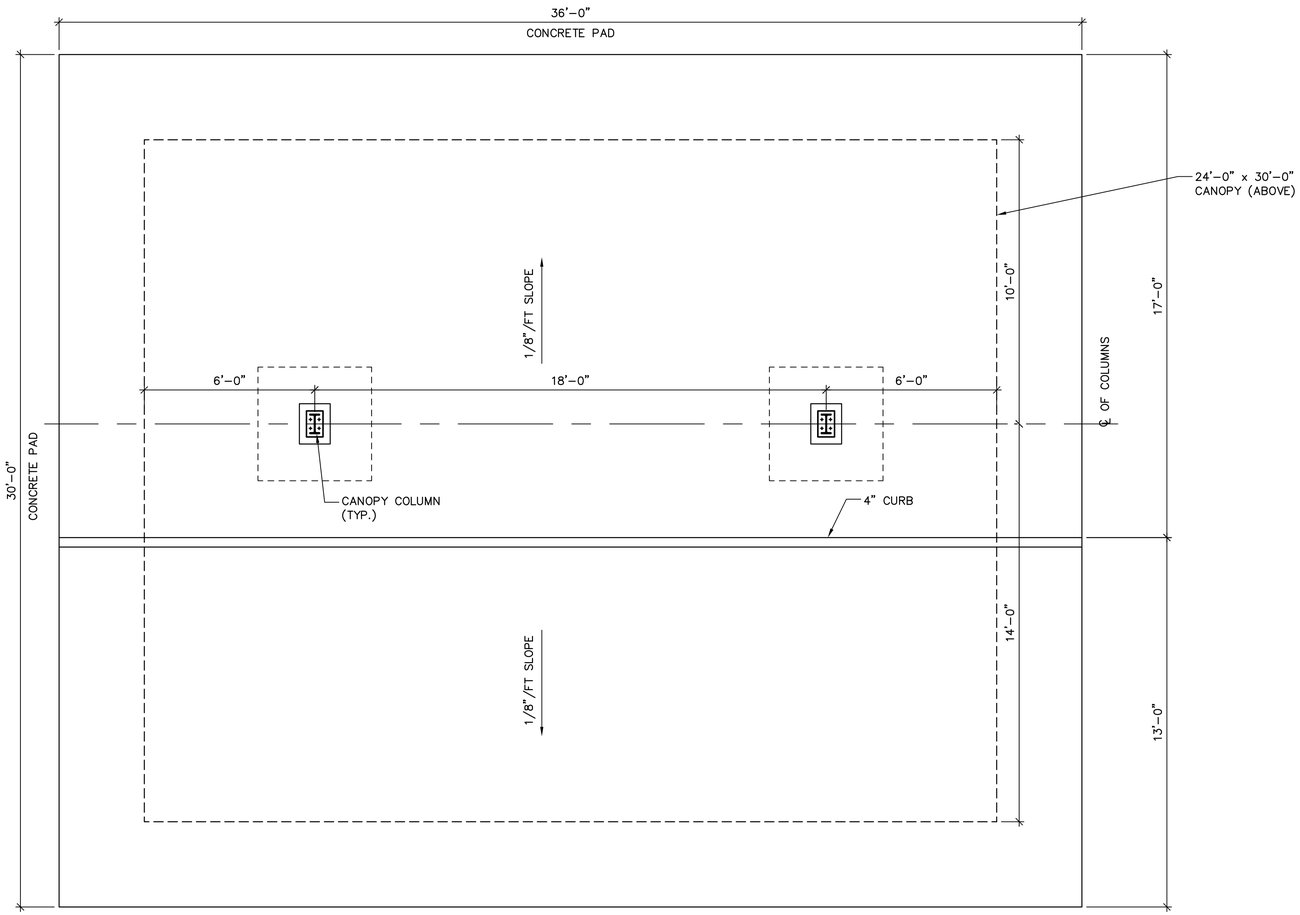

FUELING SYSTEM LAYOUT – FOUNDATION PLAN

SCALE: 3/8" = 1'-0"

0 2' 4' 6'

60% DESIGN SUBMITTAL - NOT FOR CONSTRUCTION

US Army Corps of Engineers ®

MARK	DESCRIPTION	DATE

DESIGNED BY:	ISSUE DATE:
XXXXXXX	MAY 2020
DRAWN BY:	SOLICITATION NO.:
XXXXXXX	XXXXXXX
CHECKED BY:	CONTRACT NO.:
T. MINEHARDT	W912DR18D0004
SUBMITTED BY:	##########
A. MITCHUNS	##########
SIZE:	##########
ANSI D	

U.S. ARMY CORPS OF ENGINEERS
NEW YORK DISTRICT
26 FEDERAL PLAZA
NEW YORK, NEW YORK 10278

ARCADIS OF NEW YORK, INC.
855 ROUTE 146, SUITE 210
CLIFTON PARK, NEW YORK 12065

WATERVLIET ARSENAL
UST-AST DESIGN PROJECT

NEW GASOLINE & DIESEL TANKS FOUNDATION PLAN

SHEET ID
S-05
51 OF 71

WARNING - IT IS A VIOLATION OF NEW YORK EDUCATION LAW, SECTION 7209.2, FOR ANY PERSON, UNLESS HE IS ACTING UNDER THE DIRECTION OF A LICENSED PROFESSIONAL ENGINEER OR LAND SURVEYOR, TO ALTER THIS DOCUMENT IN ANY WAY. IF ALTERED, THE ALTERING PERSON SHALL COMPLY WITH THE REQUIREMENTS OF NEW YORK LAW, SECTION 7209.2.

USER: ASK0799 FILENAME: C:\USERS\ASK0799\ARCADIS\WATERVLIET ARSENAL DESIGN PROJECTS - 5.3 - UST - AST\3 - DETAILED DESIGN\05_STRUCTURAL AND GEOTECH\STRUCTURALS-05.DWG SAVE DATE: 7/9/2020 1:19 PM PLOT DATE: 2/1/2021 1:05 PM

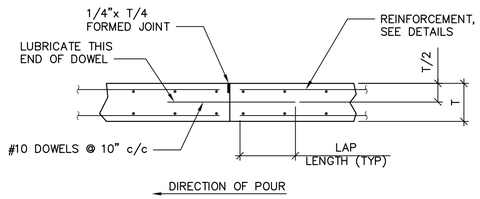

SECTION OR SECTIONAL PLAN

TYPICAL CONSTRUCTION JOINT DETAIL

NOT TO SCALE

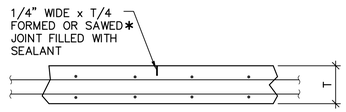

*SAWED JOINT SHALL BE MADE NO LATER THAN 12 HOURS AFTER CONCRETE IS PLACED

SECTION

TYPICAL SLAB CONTRACTION JOINT DETAIL

NOT TO SCALE

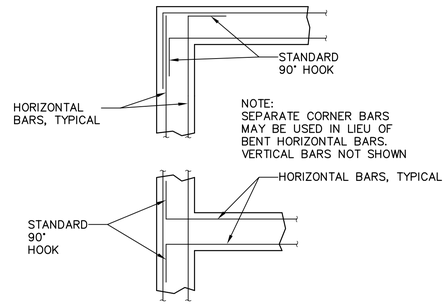

SECTIONAL PLAN

TYPICAL FOUNDATION WALL OR FOOTING INTERSECTION

REINFORCING DETAILS

NOT TO SCALE

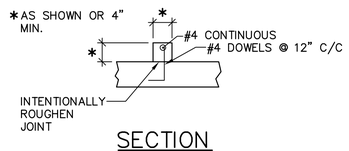

SECTION

CURB DETAIL

NOT TO SCALE

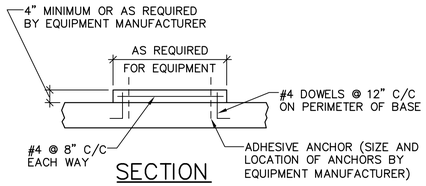

SECTION

EQUIPMENT PAD DETAIL

NOT TO SCALE

WARNING - IT IS A VIOLATION OF NEW YORK EDUCATION LAW, SECTION 7209.2, FOR ANY PERSON, UNLESS HE IS ACTING UNDER THE DIRECTION OF A LICENSED PROFESSIONAL ENGINEER OR LAND SURVEYOR, TO ALTER THIS DOCUMENT IN ANY WAY. IF ALTERED, THE ALTERING PERSON SHALL COMPLY WITH THE REQUIREMENTS OF NEW YORK LAW, SECTION 7209.2.

60% DESIGN SUBMITTAL - NOT FOR CONSTRUCTION

US Army Corps of Engineers ®

MARK	DESCRIPTION	DATE

DESIGNED BY:	XXXXXXX
DRAWN BY:	XXXXXXX
CHECKED BY:	T. MINEHARDT
SUBMITTED BY:	A. VITOLINS
SIZE:	ANSI D
ISSUE DATE:	JANUARY 2021
SOLICITATION NO.:	XXXXXXX
CONTRACT NO.:	W912DR18D0004
	##########
	##########

U.S. ARMY CORPS OF ENGINEERS
NEW YORK DISTRICT
26 FEDERAL PLAZA
NEW YORK, NEW YORK 10278

ARCADIS OF NEW YORK, INC.
855 ROUTE 146, SUITE 210
CLIFTON PARK, NEW YORK 12065

WATERVLIET ARSENAL
UST-AST DESIGN PROJECT

STRUCTURAL - DETAILS I

SHEET ID
S-08

60% DESIGN

USER: AS900799 FILENAME: C:\USERS\AS900799\ARCADIS\WATERVLIET ARSENAL DESIGN PROJECTS - 5.3 - UST - AST\3 - DETAILED DESIGN\05_STRUCTURAL AND GEOTECH\STRUCTURAL\S-08.DWG SAVE DATE: 1/27/2021 8:32 PM PLOT DATE: 2/1/2021 1:07 PM

GENERAL NOTES

SYMBOLS AND ABBREVIATIONS
1. THIS SHEET CONTAINS SYMBOLS AND ABBREVIATIONS TYPICALLY SHOWN ON ELECTRICAL DRAWINGS AND SCHEMATICS. THIS CONTRACT DRAWING SET MAY NOT CONTAIN ALL SYMBOLS AND ABBREVIATIONS SHOWN ON THIS SHEET.

SAFEGUARDS DURING CONSTRUCTION
1. ALL CONSTRUCTION WORK COVERED IN THE UNIFORM CODE, INCLUDING ANY REMOVAL, SHALL COMPLY WITH THE REQUIREMENTS OF CHAPTER 33 OF THE 2020 FCNYS AND CHAPTER 33 OF THE 2020 BCNYS.

PERMITS AND INSPECTIONS
1. OBTAIN ALL REQUIRED PERMITS AND ARRANGE FOR ALL REQUIRED INSPECTIONS IN ACCORDANCE WITH STATE AND LOCAL GOVERNING AUTHORITIES.
2. COMPLETE WORK IN ACCORDANCE WITH THE 2017 NEC, AND STATE AND LOCAL GOVERNING REGULATIONS.
3. PERFORM WORK AS REQUIRED BY CODES, REGULATIONS, LAWS OF LOCAL, STATE AND FEDERAL GOVERNMENTS, AND OTHER AUTHORITIES WITH LAWFUL JURISDICTION. ALL MATERIAL AND EQUIPMENT SHALL BE UL LISTED.

SCOPE
1. UNLESS OTHERWISE INDICATED, PROVIDE A COMPLETE AND OPERATIONAL ELECTRICAL SYSTEM INCLUDING ALL NECESSARY MATERIAL, LABOR, AND EQUIPMENT.
2. ALL DISCONNECTS REQUIRED BY CODE MAY NOT BE SHOWN. CONTRACTOR SHALL PROVIDE ALL NECESSARY DISCONNECTS PER 2017 NEC.
3. ALL EQUIPMENT AND MATERIAL SHALL BE LABELED AND LISTED, AND INSTALLED IN ACCORDANCE WITH THEIR LISTING.
4. PROVIDE ELECTRICAL CONNECTION FOR EVERY FIXTURE, OR ITEM OF EQUIPMENT REQUIRING SAME, WHICH IS SHOWN OR LISTED ON ANY CONTRACT DRAWING
5. CONTRACTOR SHALL PROVIDE NECESSARY SUPPORT FRAMING, STIFFENERS, BRACING, AND HANGERS WHETHER SHOWN OR NOT TO ENSURE A COMPLETE AND DURABLE SYSTEM. SUPPORT FRAMING CONNECTIONS SHALL BE WELDED UNLESS SPECIFICALLY SHOWN OTHERWISE. ACTUAL SUPPORTS MAY VARY FROM THOSE SHOWN IN DETAILS TO ACCOMMODATE EXISTING FIELD CONDITIONS.
6. THE WORK INCLUDED IN THIS CONTRACT ENCOMPASSES THE DRAWINGS AND SPECIFICATIONS. WORK INCLUDED ON THE DRAWINGS ONLY, OR IN THE SPECIFICATIONS ONLY, SHALL BE INCORPORATED AS IF INCLUDED IN BOTH. ALL SYSTEMS SHOWN ARE INTENDED TO BE COMPLETE AND FULLY FUNCTIONING. THE CONTRACTOR SHALL PROVIDE SUCH COMPONENTS AS NECESSARY FOR A FULLY FUNCTIONING SYSTEM.
7. ALL EQUIPMENT SHALL BE INSTALLED IN A NEAT AND WORKMANLIKE MANNER, RECTILINEAR TO BUILDING STRUCTURE.
8. FIELD VERIFY ALL SITE CONDITIONS AND DIMENSIONS PRIOR TO COMMENCEMENT OF ANY WORK OR SHOP FABRICATION. REPORT ANY DISCREPANCIES TO THE DIRECTOR'S REPRESENTATIVE IN WRITING, PRIOR TO COMMENCEMENT OF ANY WORK.

COORDINATION OF WORK
1. COORDINATE AND VERIFY THAT WORKING AND DEDICATED EQUIPMENT SPACE REQUIREMENTS ARE MET PER NEC.
2. FIELD LOCATE ALL CORE DRILL LOCATIONS.
3. BEFORE CUTTING OR DRILLING INTO BUILDING ELEMENTS INSPECT AND LAYOUT WORK TO AVOID DAMAGING STRUCTURAL ELEMENTS AND BUILDING UTILITIES.
4. BEFORE SELECTING MATERIAL/EQUIPMENT AND PROCEEDING WITH WORK, INSPECT AREAS WHERE MATERIAL AND EQUIPMENT ARE TO BE INSTALLED TO INSURE SUITABILITY, AND CHECK NEEDED SPACE FOR PLACEMENT, CLEARANCES AND INTERCONNECTIONS.
5. POSSIBLE SYSTEM SHUT-DOWNS AND WORK AREAS CLOSURES MUST BE COORDINATED WELL IN ADVANCE WITH THE CONTRACTOR OFFICER'S REPRESENTATIVE.
6. VERIFY RECEPTACLE, SWITCH, & COVER PLATE COLORS WITH THE CONTRACTOR OFFICER'S REPRESENTATIVE.
7. TURN OVER TO THE CONTRACTOR OFFICER'S REPRESENTATIVE ALL MANUFACTURER'S WARRANTIES FOR EQUIPMENT AND MATERIALS PROVIDED.
8. COORDINATE ANY REQUIRED CONTRACTOR STAGING AREA WITH THE CONTRACTOR OFFICER'S REPRESENTATIVE.

DEFINITIONS
1. THE DEFINITION OF ELECTRICAL TERMS USED SHALL BE AS DEFINED IN THE 2017 EDITION OF THE NATIONAL ELECTRICAL CODE (NEC) AS REFERENCED IN THE BUILDING CODE OF NEW YORK STATE.
2. THE TERM "INDICATED" SHALL MEAN "AS SHOWN ON CONTRACT DOCUMENTS (SPECIFICATIONS, DRAWINGS, AND RELATED ATTACHMENTS)".
3. THE TERM "PROVIDE" SHALL MEAN "TO FURNISH, INSTALL, AND CONNECT COMPLETELY".
4. THE TERM "SIZE" SHALL MEAN ONE OR MORE OF THE FOLLOWING: "LENGTH, CURRENT AND VOLTAGE RATING, NUMBER OF POLES, NEMA SIZE, AND OTHER SIMILAR ELECTRICAL CHARACTERISTICS".

PLANS
1. ELECTRICAL PLANS, DETAILS, AND ONE LINE DIAGRAMS SHOW THE GENERAL LOCATION AND ARRANGEMENT OF THE ELECTRICAL SYSTEM. THEY ARE DIAGRAMMATIC AND DO NOT SHOW ALL CONDUIT BODIES, CONNECTORS, BENDS, FITTINGS, HANGERS, AND ADDITIONAL PULL BOXES WHICH THE CONTRACTOR MUST PROVIDE TO COMPLETE THE ELECTRICAL SYSTEM.
2. ELECTRICAL PLANS AND DETAILS DO NOT SHOW ALL INTERFERENCES AND CONDITIONS, VISIBLE AND/OR HIDDEN, THAT MAY EXIST. CONTRACTOR MUST INSPECT AND SURVEY THE SPACE BEFORE PERFORMING THE WORK.
3. THESE DRAWINGS ARE SCHEMATIC IN NATURE AND REPRESENT A COMPLETED PROJECT. MINOR MODIFICATIONS OF WORK SHALL BE PROVIDED BY THE CONTRACTOR TO COMPLY WITH PROJECT REQUIREMENTS, LOCATIONS OF DEVICES AND EQUIPMENT SHOW A GENERAL ARRANGEMENT AND INTENDED FUNCTION. ALL COMPONENTS SHOWN ON THE RISER DIAGRAMS, BUT NOT ON THE PLAN OR VICE VERSA, SHALL BE INCLUDED AS IF SHOWN ON BOTH. EXACT LOCATION OF MECHANICAL EQUIPMENT THAT REQUIRE ELECTRICAL CONNECTIONS ARE SHOWN ON THE MECHANICAL DRAWINGS. BEFORE INSTALLATION OF WORK, CHECK FOR SWINGS AND ALL REQUIRED CLEARANCES, TO AVOID INTERFERENCE WITH OTHER TRADES. COORDINATE WITH ALL CONTRACT DOCUMENTS, SHOP DRAWINGS AND EQUIPMENT DRAWINGS. THE CONTRACTOR IS RESPONSIBLE FOR OBTAINING ALL REQUIRED CONTRACT DRAWINGS.

METHODS
1. CORE DRILL ALL THRU WALL & THRU FLOOR PENETRATIONS. ALL THRU FLOOR CONDUIT PENETRATIONS TO BE PROPERLY SEALED TO ELIMINATE POTENTIAL FOR WATER TO ENTER CONDUIT SYSTEM OR PASS THRU FLOOR PENETRATION.
2. ALL EXTERIOR CONDUITS TO HAVE DUCT SEAL INSTALLED AT ALL ENDS, BOXES, WEATHERHEADS, PENETRATIONS TO INTERIOR SPACES, ETC.
3. DUCT BANKS SHALL NOT BE ROUTED DIRECTLY ABOVE OR BELOW EXISTING/NEW UTILITIES EXCEPT WHEN CROSSING. WHERE CROSSING EXISTING OR NEW UTILITY DUCT BANKS SHALL CROSS AT 90 DEGREE ANGLES.
4. ALL CONDUIT SYSTEMS EXPOSED TO TEMPERATURE DIFFERENTIALS, IN POTENTIAL CONDENSING ATMOSPHERES, EXTERIOR INSTALLED, OR INSTALLED UNDERGROUND SHALL HAVE PROVISIONS FOR DRAINING WATER OUT OF CONDUIT SYSTEMS.
5. WHERE WIRE SIZE IS NOT NOTED ON DRAWINGS, CONTRACTOR SHALL SIZE ACCORDING TO THE NEC AND SHALL ADHERE TO THE FOLLOWING CRITERIA:
   - EQUIPMENT CIRCUITS AND FEEDERS LESS THAN OR EQUAL TO 100A SHALL BE SIZED USING THE 60°C COPPER AMPACITY COLUMN (NEC T310.16).
   - EQUIPMENT CIRCUITS AND FEEDERS GREATER THAN 100A SHALL BE SIZED USING THE 75°C COPPER AMPACITY COLUMN (NEC T310.16). MINIMUM WIRE SIZE SHALL BE #12 THHN/THWN.
   - ALUMINUM SHALL NOT BE USED. CONDUCTORS SHALL BE SOLID UP THROUGH #10.
6. FASTENERS ON THE UNDERSIDE OF PRECAST/PRESTRESSED CONCRETE MEMBERS (PLANKS OR DOUBLE TEES) WHICH SERVE FOR DIRECT ATTACHMENT FOR HANGERS OF CONDUIT, ELECTRICAL EQUIPMENT, ETC., MAY NOT BE DRILLED-IN OR SHOT-IN IN THE VACINITY OF THE PRESTRESSING TENDONS. THIS MEANS THAT THE FASTENERS AT THE CONCRETE PLANKS CAN BE PLACED ONLY AT THE JOINT BETWEEN UNITS (UNITS ARE APPROXIMATELY 40" WIDE). ANY INTERMEDIATE SUPPORTS NEEDED TO ACCOMPLISH THIS SHALL BE PROVIDED BY THE CONTRACTOR. AT DOUBLE TEES, ATTACHMENT TO THE FLANGES IS ALLOWED. HOWEVER, BECAUSE OF THEIR THIN CROSS SECTIONS, HEAVY LOADS MUST BE CARRIED BY THROUGH-BOLTS WHICH MUST BE INSTALLED BEFORE THE ROOFING IS APPLIED.

UNDERGROUND UTILITIES
1. UNDERGROUND UTILITY LOCATIONS ARE NOT GUARANTEED, NOR IS THERE ANY GUARANTEE THAT ALL EXISTING UTILITIES WHETHER FUNCTIONAL OR ABANDONED WITHIN THE PROJECT AREA ARE SHOWN ON THESE DRAWINGS.
2. THE CONTRACTOR SHALL DETERMINE THE EXACT LOCATION OF ALL UNDERGROUND UTILITIES BEFORE BEGINNING WORK & SHALL BE RESPONSIBLE FOR ALL DAMAGE RESULTING FROM HIS/HER WORK.
3. THE CONTRACTOR SHALL NOTIFY "DIG SAFELY NEW YORK" 1-800-962-7962 PRIOR TO ANY EXCAVATION.
4. NO ATTEMPT WAS MADE TO LOCATE SUBSURFACE STRUCTURES, ABOVEGROUND STRUCTURES AND/OR UTILITIES BELIEVED TO EXIST IN THE WORKING AREA. IT SHALL BE THE CONTRACTOR'S RESPONSIBILITY TO LOCATE EXISTING UTILITIES NEEDED TO COMPLETE THE WORK AND IT SHALL BE HIS RESPONSIBILITY TO PROCEED WITH GREAT CARE IN EXECUTING ANY WORK. CONTRACTOR SHALL COMPLY WITH THE STATE OF NEW YORK DEPARTMENT OF PUBLIC SERVICE, 16NYCRR PART 753.
5. THE DIRECTOR'S REPRESENTATIVE SHALL BE NOTIFIED IN WRITING OF ANY CONDITIONS THAT VARY FROM THOSE SHOWN ON THE PLANS. THE CONTRACTOR'S WORK SHALL NOT VARY FROM THE PLANS WITHOUT THE EXPRESSED APPROVAL OF THE DIRECTOR'S REPRESENTATIVE AND DIRECTOR'S REPRESENTATIVE.
6. CONTRACTOR SHALL PROTECT ALL EXISTING STORM WATER DRAINAGE FACILITIES, INCLUDING PIPES, DRAINAGE STRUCTURES, SWALES, DITCHES, ETC. CONTRACTOR SHALL REPLACE AND RESTORE ANY AND ALL OF THESE FACILITIES, AFFECTED BY CONSTRUCTION ACTIVITIES, AT NO ADDITIONAL COST TO THE DIRECTOR'S REPRESENTATIVE.
7. CONTRACTOR SHALL BE RESPONSIBLE FOR PROTECTING EXISTING UTILITIES DURING OPERATIONS.
8. THE CONTRACTOR SHALL BE RESPONSIBLE FOR RESTORING ANY SURVEY OR RIGHT-OF-WAY MONUMENTS DISTURBED DURING CONSTRUCTION. THE CONTRACTOR SHALL EMPLOY A LICENSED LAND SURVEYOR TO RESTORE ALL DISTURBED MONUMENTS TO THEIR ORIGINAL LOCATION.
9. RESTORE ALL SURFACES TO AS GOOD OR BETTER CONDITION THAN BEFORE CONSTRUCTION AS SOON AS POSSIBLE FOLLOWING COMPLETION OF WORK IN ANY AREA.
10. THE CONTRACTOR SHALL BECOME FAMILIAR WITH SITE CONDITIONS AND SHALL INCLUDE PROVISIONS TO AVOID CONFLICTS WITH AND/OR RESTORE SITE FEATURES IN THE BID.
11. ALL SUITABLE EXCAVATED MATERIAL SHALL BE REUSED ON SITE AND BE SUITABLY STABILIZED SO THAT IT CANNOT REASONABLY RE-ENTER ANY BODY OF WATER.
12. ALL EXCAVATION SHALL BE CONDUCTED IN ACCORDANCE WITH OSHA STANDARDS, LOCAL REGULATIONS, STATE REGULATIONS, AND FEDERAL REGULATIONS.

GENERAL NOTATION

DRAWING NOTATION

HEAVY & DOTTED AND/OR HATCHED INDICATES EXISTING EQUIPMENT TO BE REMOVED BY THIS CONTRACT.

SOLID & LIGHT INDICATES EXISTING EQUIPMENT TO REMAIN.

HEAVY & SOLID INDICATES EQUIPMENT TO BE PROVIDED BY THIS CONTRACT.

DB-XX — DESIGNATION FOR UNDERGROUND ELECTRICAL DUCT BANK

TEXT ADJACENT TO EQUIPMENT IS SOMETIMES ADDED FOR EXTRA CLARIFICATION ON REMOVAL/EXISTING TO REMAIN ITEMS. REFER TO LIST BELOW FOR DEFINITIONS.

TBR	EXISTING EQUIPMENT TO BE REMOVED BY THIS CONTRACT.
ETR	EXISTING EQUIPMENT TO REMAIN.
ERE	EXISTING EQUIPMENT TO BE REMOVED AND RELOCATED AS SHOWN BY THIS CONTRACT.
ETN	EXISTING EQUIPMENT TO BE REMOVED AND REPLACED BY THIS CONTRACT.
—— UGE ——	UNDERGROUND ELECTRIC (SAND FILL)
RUGE	UNDERGROUND ELECTRIC (REINFORCED CONCRETE)
—— OHE ——	OVERHEAD ELECTRIC
—— HT ——	HEAT TRACE

CIRCUITING LEGEND

CIRCUITING

LP2A-1,3,5 — HOMERUN TO PANEL "LP2A", CIRCUITS #1,3,5 (VIA 20A-3P C/B). PROVIDE INSULATED GROUND CONDUCTOR IN ACCORDANCE WITH SPECIFICATIONS. NUMBER OF CIRCUITS INDICATED BY QUANTITY OF ARROW HEADS

L2PA-2 — HOMERUN TO PANEL "L2PA" VIA 20A/1P CKT BKR. SEE BELOW PARAGRAPH 'HASH MARKS' FOR CONDUCTOR SIZING:

HASH MARKS INDICATE QUANTITY OF #12 AWG COPPER CONDUCTORS IN CONDUIT. WHEN NO HASH MARKS ARE INDICATED, CONDUIT SHALL CONTAIN (2) #12 WIRES AND #12 GROUND WIRE. ASSUME 1/2" DIAMETER CONDUIT, UNLESS NOTED OTHERWISE NOTED
EXAMPLE SHOWN AT LEFT INDICATES 2 HOT (SHORT LINES), 2 NEUTRAL (LONG LINES), AND 1 GROUND WIRES (LONG LINE WITH TAIL).

NOTE
CONDUCTORS REQUIRED FOR LUMINAIRE SWITCHING ARE NOT ACCOUNTED FOR ON THE PLANS USING HASH MARKS. CONTRACTOR SHALL INCLUDE ANY NECESSARY CONDUCTORS REQUIRED FOR SWITCHING IN BID. SWITCHING DESIGNATIONS (LOWER CASE LETTERS) ARE SHOWN TO ILLUSTRATE SWITCHING INTENT.

CIRCUIT ROUTING SHOWN ON DRAWINGS SHALL BE CONSIDERED DIAGRAMMATIC ONLY. CONTRACTOR SHALL PROVIDE NECESSARY OFFSETS AND ROUTE FEEDERS AFTER HAVING CONSIDERED ALL FIELD OBSTACLES

POWER EQUIPMENT

SINGLE LINE DIAGRAM

- POWER TRANSFORMER
- PT — POTENTIAL TRANSFORMER
- CT — CURRENT TRANSFORMER
- FUSE
- **AF **AT — MOLDED CASE CIRCUIT BREAKER
  "AF" INDICATES AMPERE FRAME SIZE
  "AT" INDICATES AMPERE TRIP SETTINGS
- 400AF 300AT — FUSED DISCONNECT
  "400AF" INDICATES AMPERE SWITCH SIZE
  "300AT" INDICATES AMPERE FUSE SIZE
- 200A — DISCONNECT SWITCH (NON-FUSED)
  "200A" INDICATES AMPERE SWITCH SIZE
- SYSTEM GROUND OR EQUIPMENT GROUND
- SURVEILLANCE CAMERA
- SURVEILLANCE CAMERA
- PANELBOARD WITH MAIN CIRCUIT BREAKER
- PANELBOARD WITH MAIN LUGS ONLY
- EMERGENCY GENERATOR
- METER
- ATS / MTS
- ACROSS-THE-LINE STARTER (AXL)
- CONTACTOR (NORMALLY OPEN)
- CO — CARBON MONOXIDE DETECTOR
- CONTACTOR (NORMALLY CLOSED)
- CONDUIT SEALING FITTING
- CONDUIT UNION
- CONDUIT BUSHING
- CONTROL DEVICE/INSTRUMENT
- VARIABLE FREQUENCY DRIVE (VFD)
- THRU WALL WATERTIGHT PENETRATION
- E — FLEX CONNECTION (E DENOTES EXPLOSION PROOF)
- AMPS — AMMETER
- VOLTS — VOLTMETER
- KWHD — POWER METER
- KDR — INPUT LINE REACTOR

FLOOR PLAN

- SURFACE MTD BRANCH CIRCUIT PANELBOARD.
- RECESSED MTD BRANCH CIRCUIT PANELBOARD.
- JB — JUNCTION AND/OR PULL BOX
- AF/P — HEAVY DUTY NON-FUSED DISCONNECT SWITCH.
  "AF" - INDICATES FRAME SIZE
  "P" - INDICATES # OF POLES
- AF/AT/P — HEAVY DUTY FUSED DISCONNECT SWITCH.
  "AF" - INDICATES FRAME SIZE
  "AT" - INDICATES FUSE TRIP SIZE
  "P" - INDICATES # OF POLES
- ELECTRICAL CONNECTION AS DEFINED IN EQUIPMENT CONNECTION SCHEDULE.
- HP — EXISTING ELECTRICAL CONNECTION. ('HP' DENOTES HORSEPOWER.)
- LOCAL PUSH BUTTON CONTROL STATION
- UTILITY POLE
- SPD — SURGE SUPPRESSION DEVICE
- ALARM/ INDICATION LIGHT

WIRING DEVICES

RECEPTACLES

1. FACEPLATE COLOR - STAINLESS STEEL, UON.
2. DEVICE COLOR - GRAY, UON.

- 125 VOLT, 2 POLE, 3 WIRE, 20 AMP., HEAVY DUTY DUPLEX RECEPTACLE, MOUNTING HEIGHT 18" AFF (UON).
- 125 VOLT, 2 POLE, 3 WIRE, 20 AMP., HEAVY DUTY DUPLEX RECEPTACLE MOUNTED ABOVE COUNTER (UON).
- 125 VOLT, 2 POLE, 3 WIRE, 20 AMP., HEAVY DUTY DUPLEX RECEPTACLE, STANCHION-MOUNTED. PROVIDE NECESSARY UNISTRUT/MOUNTING HARDWARE @ 24" A.F.G. (UON)

TEXT ADJACENT TO RECEPTACLES INDICATES CONFIGURATION OR ACCESSORIES. REFER TO LIST BELOW FOR DEFINITIONS.

#	INDICATES PANELBOARD CIRCUIT TO WHICH RECEPTACLE SHALL BE CIRCUITED. REFER TO HOMERUN FOR PANELBOARD DESIGNATION.
WP	EXTERIOR RECEPTACLES SUBJECT TO DAMP ENVIRONMENTS SHALL HAVE WEATHER-PROOF-IN-USE BUBBLE COVER WITH PADLOCK CAPABILITY. WEATHER-PROOF RECEPTACLES ARE TO HAVE INTEGRAL GFI PROTECTION (SEE BELOW)
GFI	RECEPTACLE EQUIPPED WITH INTEGRAL GROUND FAULT CIRCUIT INTERRUPTER
XP	EXPLOSION PROOF. RATED FOR CLASS I DIVISION I INSTALLATION.

SWITCHES

1. FACEPLATE COLOR - STAINLESS STEEL, UON.
2. DEVICE COLOR - GRAY, UON.

- 125V, 20A HEAVY DUTY SWITCH.

TEXT ADJACENT TO SWITCH INDICATES SPECIAL CONFIGURATION OR ACCESSORIES. REFER TO LIST BELOW FOR DEFINITIONS.

a,b	LOWER CASE LETTER INDICATES SWITCH DESIGNATION.
3,4	INDICATES A 3-WAY OR 4-WAY SWITCH.
WP	EXTERIOR SWITCHES SUBJECT TO DAMP ENVIRONMENTS SHALL HAVE WEATHER-PROOF-IN-USE BUBLE COVER WITH PADLOCK CAPABILITY.
M	MOTOR RATED SNAP SWITCH WITH OVERLOADS. CONTRACTOR SHALL SIZE SWITCH AND OVERLOADS BASED ON ACTUAL NAMEPLATE DATA OF EQUIPMENT SUPPLIED/PURCHASED.
D	DIMMING SWITCH (SLIDER TYPE). SWITCH SHALL BE COMPATIBLE WITH INSTALLED FIXTURES. PROVIDE WITH MANUAL "ON/OFF" CONTROL OF LIGHTING FIXTURES CONTROLLED.
XP	EXPLOSION PROOF. RATED FOR CLASS I DIVISION I INSTALLATION.

GENERAL ABBREVIATIONS

A	AMPERES
AFF	ABOVE FINISH FLOOR
AFG	ABOVE FINISH GRADE
AHJ	AUTHORITY HAVING JURISDICTION
AIC	AMPERE INTERRUPTING CAPACITY
AL	ALUMINUM
APPROX	APPROXIMATELY
ATS	AUTOMATIC TRANSFER SWITCH
AWG	AMERICAN WIRE GAUGE
AXL	ACROSS THE LINE STARTER
BLDG	BUILDING
BOD	BASIS OF DESIGN
C	CONDUIT
CB	CIRCUIT BREAKER
CHG&E	CENTRAL HUDSON GAS & ELECTRIC
CKT	CIRCUIT
CL	CENTERLINE
CLF	CURRENT LIMITING FUSE
CONT	CONTRACT
CPT	CONTROL POWER TRANSFORMER
CT	CURRENT TRANSFORMER
CU	COPPER
DB	DUCT BANK
DISC	DISCONNECT
DP	DIFFERENTIAL PRESSURE SWITCH
DR	DIRECTOR'S REPRESENTATIVE
DWG	DRAWING
EC	ELECTRICAL CONTRACTOR
ECS	EQUIPMENT CONNECTION SCHEDULE
EM	EMERGENCY
EMT	ELECTRICAL METALLIC TUBING
ETR	EXISTING TO REMAIN
FLA	FULL LOAD AMPERES
FMC	FLEXIBLE METAL CONDUIT
FOMC	FIBER OPTIC MEDIA CONVERTER
FT	FEET
FURN	FURNISHED
FVR	FULL VOLTAGE REVERSING STARTER
FVNR	FULL VOLTAGE NON-REVERSING STARTER
GC	GENERAL CONTRACTOR
GF	GROUND FAULT
GFCI,GFI	GROUND-FAULT CIRCUIT INTERRUPTER
GND,G	GROUND OR GROUNDING
HH	HANDHOLE
HMI	HUMAN MACHINE INTERFACE
HOA	HAND, OFF, AUTOMATIC SWITCH
HP	HORSEPOWER
HT	HEAT TRACE
HVAC	HEATING, VENTILATING, & AIR CONDITIONING
IBC	INTERNATIONAL BUILDING CODE
IFC	INTERNATIONAL FIRE CODE
INST	INSTALLED
JB	JUNCTION BOX
KCMIL	THOUSAND CIRCULAR MILS
KVA	KILOVOLT AMPERES
KW	KILOWATTS
LCS	LOCAL CONTROL STATION
LPS	LIGHTNING PROTECTION SYSTEM
LTG	LIGHTING
LFMC	LIQUID TIGHT FLEXIBLE METAL CONDUIT
MC	METAL CLAD CABLE
MCC	MOTOR CONTROL CENTER
MCB	MAIN CIRCUIT BREAKER
MCP	MOTOR CIRCUIT PROTECTOR
MDP	MAIN DISTRIBUTION PANELBOARD
MFG	MANUFACTURER
MIN	MINIMUM
MLO	MAIN LUGS ONLY
MS	MOTOR STARTER
MTS	MANUAL TRANSFER SWITCH
MWTP	MOTOR WINDING THERMAL PROTECTOR
NC	NORMALLY CLOSED
NEC	NATIONAL ELECTRICAL CODE
NEMA	NAT'L ELECTRICAL MANUFACTURER'S ASSOC.
NESC	NATIONAL ELECTRICAL SAFETY CODE
NF	NON FUSED
NIC	NOT IN CONTRACT
NP	NAME PLATE
NTS	NOT TO SCALE
NVR	NETWORK VIDEO RECORDER
OC	ON CENTER
OEM	ORIGINAL EQUIPMENT MANUFACTURER
OHE	OVERHEAD ELECTRIC
OIU	OPERATOR INTERFACE UNIT
OL	OVERLOADS
P	POLE
PH	PHASE
POE	ETHERNET SWITCH W/ POWER OVER ETHERNET
PS	PUMP STATION
PVC	POLYVINYL CHLORIDE
QTY	QUANTITY
REQ'D	REQUIRED
RGS	RIGID GALVANIZED STEEL
RMC	RIGID METAL CONDUIT
RUGE	REINFORCED UNDERGROUND ELECTRIC
SLD	SINGLE LINE DIAGRAM
SP	SPARE
STP	SHIELDED TWISTED PAIR
TBR	TO BE REMOVED
TSTAT	THERMOSTAT
TYP	TYPICAL
TVSS	TRANSIENT VOLTAGE SURGE SUPPRESSION
UGE	UNDERGROUND ELECTRIC
UOI	UNLESS OTHERWISE INDICATED
UON	UNLESS OTHERWISE NOTED
V	VOLT
VFD	VARIABLE FREQUENCY DRIVE
VFI	VACUUM FAULT INTERRUPTER
W	WIRE
WP	WEATHER PROOF RATED DEVICE
XFMR	TRANSFORMER
Δ	DELTA
Y	WYE
ϕ	PHASE

BUILDING CODE NOTE

TO THE BEST OF THE ENGINEER'S KNOWLEDGE, BELIEF AND PROFESSIONAL JUDGEMENT, THESE PLANS AND/OR SPECIFICATIONS, ARE IN COMPLIANCE WITH THE 2020 UNIFORM CODE.

ENERGY CODE NOTE

TO THE BEST OF THE ENGINEER'S KNOWLEDGE, BELIEF AND PROFESSIONAL JUDGEMENT, THESE PLANS AND/OR SPECIFICATIONS, ARE IN COMPLIANCE WITH THE 2020 ENERGY CONSERVATION CONSTRUCTION CODE OF NEW YORK STATE.

WARNING - IT IS A VIOLATION OF NEW YORK EDUCATION LAW, SECTION 7209.2, FOR ANY PERSON, UNLESS HE IS ACTING UNDER THE DIRECTION OF A LICENSED PROFESSIONAL ENGINEER OR LAND SURVEYOR, TO ALTER THIS DOCUMENT IN ANY WAY. IF ALTERED, THE ALTERING PERSON SHALL COMPLY WITH THE REQUIREMENTS OF NEW YORK LAW, SECTION 7209.2.

60% DESIGN SUBMITTAL - NOT FOR CONSTRUCTION

US Army Corps of Engineers ®

MARK | DESCRIPTION | DATE

ISSUE DATE: JANUARY 2021
SOLICITATION NO.: XXXXXX
CONTRACT NO.: W912DR18D0004
\##############

DESIGNED BY: J. ROBINSON
DRAWN BY: D. SANFORD
CHECKED BY: B. WALLDROFF
SUBMITTED BY: J. ROBINSON
\##############
SIZE: ANSI D

U.S. ARMY CORPS OF ENGINEERS
NEW YORK DISTRICT
26 FEDERAL PLAZA
NEW YORK, NEW YORK 10278

JADE STONE ENGINEERING
MECHANICAL, ELECTRICAL, PLUMBING
444 VANDUZEE ST. WATERTOWN NY 13601
P: 315.836.4062 JSTONEENG.COM

WATERVLIET ARSENAL
UST-AST DESIGN PROJECT

ELECTRICAL LEGEND, ABBREVIATIONS, AND NOTES

SHEET ID
E-01

60% DESIGN

USER: ######## FILENAME: P:\00 JSE PROJECTS\2020\282-20 WATERVLIET AST-UST\1-ACTIVE DRAWINGS\3-MPE\E-01.DWG SAVE DATE: 2/1/2021 10:05 AM PLOT DATE: 2/1/2021 10:44 AM

OVERALL SITE – PLAN

SCALE: 1" = 200'-0"

0 200' 400'

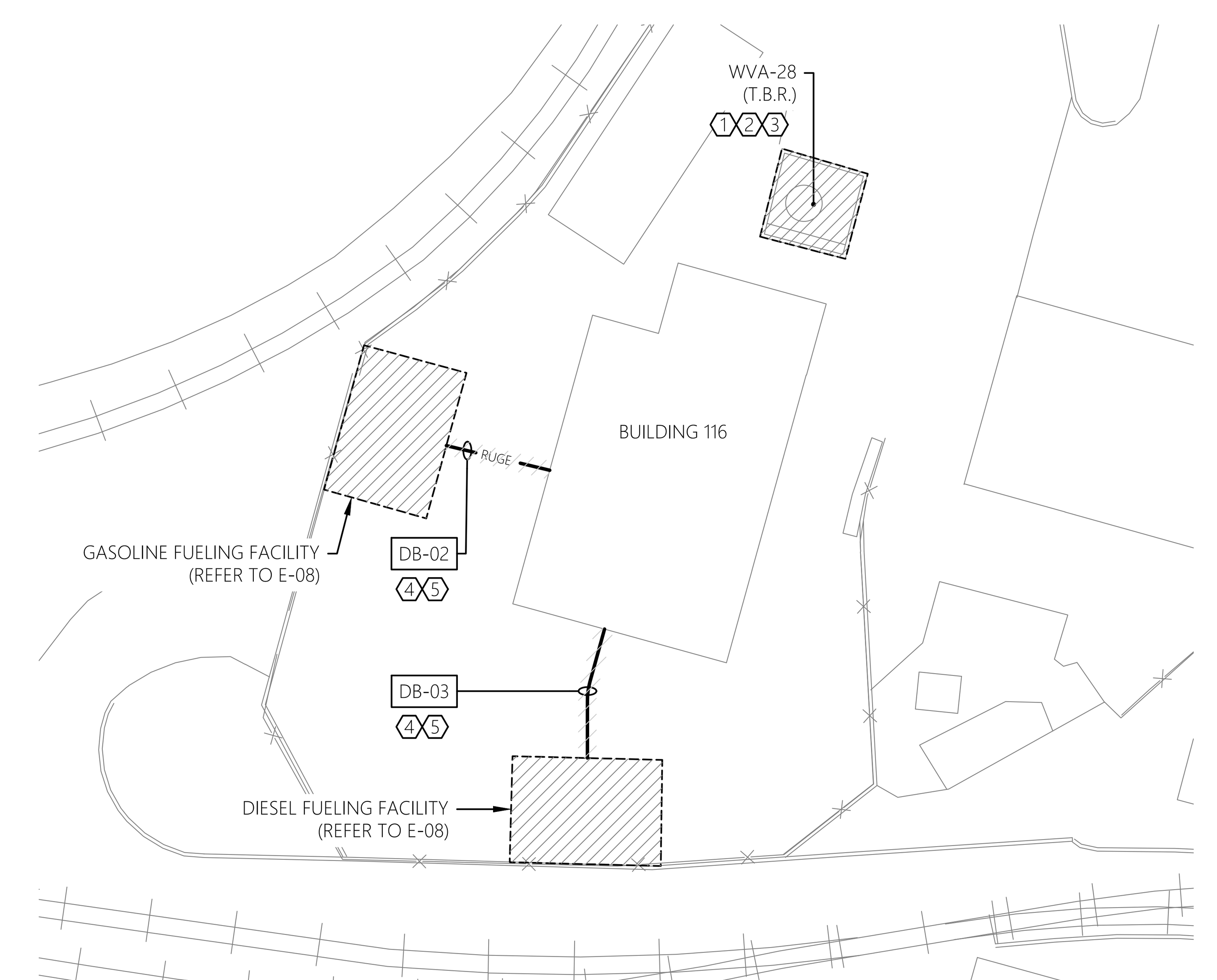

ENLARGED SITE – PLAN

SCALE: 1" = 50'-0"

0 50' 100'

GENERAL NEW WORK NOTES:

1. REFER TO E-01 FOR ELECTRICAL LEGENDS, ABBREVIATIONS AND GENERAL PROJECT NOTES.
2. PROPOSED UG DUCT BANKS AND STRUCTURES SHOWN ARE APPROXIMATE IN LOCATION. ROUTE UG DUCT BANKS WITH GENERAL ROUTING AS SHOWN ON PLANS. ROUTE DUCT BANKS AS NECESSARY TO AVOID CONFLICTS WITH SITE CONDITIONS AND PROPOSED PIPING SYSTEMS.
3. PROVIDE A DEDICATED GROUNDING CONDUCTOR FOR ALL ELECTRICAL EQUIPMENT AND ASSOCIATED EQUIPMENT/DEVICES.
4. EQUIPMENT AND DEVICE LOCATIONS ARE SHOWN AS GENERAL IN NATURE. COORDINATE WITH THE CONTRACTOR OFFICER'S REPRESENTATIVE FOR EXACT LOCATIONS.
5. REFER TO ELECTRICAL SINGLE LINE DIAGRAMS, FLOOR PLANS, RISER DIAGRAMS, SCHEDULES, & DETAILS FOR ADDITIONAL INFORMATION/REQUIREMENTS.
6. REFER TO OVERALL SITE PLANS ON CONSTRUCTION CONTRACT DRAWINGS FOR ADDITIONAL SITE INFORMATION.
7. NOT ALL EXISTING SITE UTILITIES SHOWN FOR CLARITY.
8. COORDINATE PARKING & LAYDOWN AREA WITH THE CONTRACTOR OFFICER'S REPRESENTATIVE.
9. DUCT BANKS SHALL NOT BE LOCATED ABOVE OTHER PIPING SYSTEMS EXCEPT WHERE CROSSING. MAINTAIN NESC SEPARATION BETWEEN UTILITIES.
10. REFER TO UNDERGROUND UTILITIES (GENERAL NOTES) ON SHEET E-01 FOR ADDITIONAL INFORMATION.
11. COORDINATE FINAL DUCT BANK LOCATIONS (PRIOR TO ROUGH-IN) WITH CONTRACTOR OFFICER'S REPRESENTATIVE TO AVOID CONFLICT WITH PROPOSED WORK AND EXISTING CONDITIONS.
12. CONTRACTOR TO COORDINATE ALL ASPECTS OF SEQUENCE OF CONSTRUCTION WITH THE CONTRACTOR OFFICER'S REPRESENTATIVE.
13. CONTRACTOR IS RESPONSIBLE FOR ALL SITE RESTORATION. REFER TO TYPICAL DUCT BANK SECTION DETAILS FOR ADDITIONAL INFORMATION.

SHEET KEY NOTES:

(1) CONTRACTOR TO PROVIDE COMPLETE ELECTRICAL DEMOLITION OF EXISTING FUELING SYSTEM AND ALL ASSOCIATED ACCESSORIES. REMOVE THE FOLLOWING DEVICES INCLUDING BUT NOT LIMITED TO THE FOLLOWING; DISPENSERS, PUMPS (DISCONNECT & REMOVE BRANCH CIRCUITRY), JUNCTION BOXES, ELECTRIC VALVES, AND INSTRUMENTS/CONTROLS. COORDINATE REMOVAL EFFORTS CLOSELY WITH CONTRACTOR OFFICER'S REPRESENTATIVE.

(2) CONTRACTOR TO CLOSELY COORDINATE THE REMOVAL EFFORTS OF ALL EQUIPMENT/DEVICES SCHEDULED FOR REMOVAL WITH CONTRACTOR OFFICER'S REPRESENTATIVE.

(3) CONTRACTOR TO DEMOLISH ALL EXISTING JUNCTION BOXES (POWER & CONTROL) AND LOCAL CONTROL STATIONS ASSOCIATED WITH THE FUELING SYSTEM EQUIPMENT REMOVALS. CONTRACTOR TO REMOVE ALL ASSOCIATED CIRCUITRY (CONDUIT & CONDUCTORS) BACK TO SOURCE. CONTRACTOR TO FIELD VERIFY AND COORDINATE CLOSELY WITH CONTRACTOR OFFICER'S REPRESENTATIVE. TYPICAL OF TWO (2) FUELING SYSTEMS.

(4) CONTRACTOR TO COORDINATE FINAL DUCT BANK ROUTING/REQUIREMENTS WITH EXISTING FIELD CONDITIONS, PROPOSED WORK, AND CONTRACTOR OFFICER'S REPRESENTATIVE PRIOR TO ROUGH-IN. TYPICAL OF ALL PROPOSED DUCT BANKS.

(5) CONTRACTOR RESPONSIBLE TO RESTORE ALL DISTURBED SURFACES AS PART OF THIS PROJECT TO SIMILAR CONDITIONS OF THAT BEFORE THE PROJECT COMMENCED. COORDINATE FINAL REQUIREMENTS WITH THE OWNER. REFER TO DUCT BANK SECTION DETAIL FOR ADDITIONAL INFORMATION. TYPICAL OF ALL PROPOSED DUCT BANKS.

GENERAL SECURITY NOTES:

A. ALL WORK MUST BE PERFORMED IN SUCH A MANNER SO AS TO MAINTAIN FACILITY SECURITY AT ALL TIMES IN STRICT ACCORDANCE WITH THE PROJECT MANUAL.
B. ALL WORK NEAR THE PERIMETER SECURITY FENCES MUST BE PERFORMED IN SUCH A MANNER SO AS TO MAINTAIN PERIMETER SECURITY AT ALL TIMES IN STRICT ACCORDANCE WITH THE PROJECT MANUAL.
C. THE FACILITY IS PROTECTED BY PERIMETER FENCES, PERIMETER FENCE LIGHTING SYSTEM, PERIMETER ALARM SYSTEMS, AND PERIMETER SURVEILLANCE CCTV SYSTEM, WHICH ARE INTEGRATED TOGETHER TO WORK AS A SINGLE PERIMETER SECURITY SYSTEM. THESE SYSTEMS SHALL BE FULLY OPPERATIONAL AT ALL TIMES DURING THE WORK OF THIS CONTRACT. THE WORK REQUIRED BY THIS CONTRACT NEAR THESE SYSTEMS, SHALL BE PERFORMED IN SUCH A MANNER SO AS TO PREVENT ANY DOWN TIME (INTERRUPTIONS) TO ANY OF THESE SYSTEMS.
D. THE EXACT LOCATIONS OF EXISTING UNDERGROUND UTILITIES AND PERIMETER SECURITY LINES ARE UNKNOWN AND SHOWN APPROXIMATE ONLY. BEFORE ANY WORK IS STARTED NEAR THE PERIMETER FENCES, DETERMINE EXACT LOCATION OF ALL UNDERGROUND UTILITIES AND PERIMETER SECURITY SYSTEM LINES (WHETHER SHOWN ON DRAWINGS OR NOT) BY USE OF AN UNDERGROUND UTILITY LOCATOR SERVICE. MARK AND PROTECT ALL UNDERGROUND UTILITIES AND PERIMETER SECURITY SYSTEM LINES. CONTRACTOR SHALL BE HELD RESPONSIBLE FOR ANY DAMAGE TO ANY UNDERGROUND UTILITIES AND PERIMETER SECURITY SYSTEM LINES.
E. EXTREME CAUTION SHALL BE USED WHEN WORKING NEAR THE PERIMETER SECURITY SYSTEMS AND THEIR ASSOCIATED CIRCUITS. THE CONTRACTOR SHALL BE HELD RESPONSIBLE FOR ANY DAMAGE TO THESE SYSTEMS AND/OR LOSSES DUE TO DAMAGE TO THESE SYSTEMS, INCLUDING THE COST TO REPAIR THE DAMAGE AND ANY COST INCURRED BY THE CONTRACTOR OFFICER'S REPRESENTATIVE FOR ADDITIONAL SECURITY STAFF TO PROTECT THE PERIMETER OF THE FACILITY DUE TO ANY OUTAGES OF THE SECURITY SYSTEMS.

GENERAL DEMOLITION NOTES:

1. REFER TO E-01 FOR ELECTRICAL LEGENDS, ABBREVIATIONS, AND GENERAL PROJECT NOTES.
2. ITEMS INDICATED TO BE REMOVED:
   - 2.1. REMOVE ALL CONDUCTORS AND EXPOSED CONDUIT BACK TO SOURCE (UOI).
   - 2.2. REMOVE CIRCUIT WIRING AND CIRCUIT BREAKER FROM SOURCE PANEL (UOI).
   - 2.3. REMOVE ALL ASSOCIATED CONTROL CONDUCTORS, CONDUITS, AND DEVICES (UOI).
   - 2.4. REMOVE ASSOCIATED STARTERS, DISCONNECTS, CONTROL STATIONS, AND ALL ASSOCIATED CIRCUITRY (UOI).
   - 2.5. REMOVE EQUIPMENT PADS & MOUNTING HARDWARE, BRACKETS, ACCESSORIES, ETC... (UOI).
   - 2.6. REVISE PANELBOARD DIRECTORIES/NAME PLATES AS CHANGES OCCUR (UOI).
3. THESE REMOVAL DRAWINGS ARE SCHEMATIC IN NATURE AND ARE BASED ON CURSORY FIELD OBSERVATION AND EXISTING DRAWINGS. IT IS NOT THE INTENTION OF THESE DRAWINGS TO INDICATE EVERY DEVICE/FIXTURE REQUIRING REMOVAL RATHER GENERAL SYSTEMS WHICH ARE TO BE REMOVED. COORDINATE REMOVAL EFFORTS CLOSELY WITH CONTRACTOR OFFICER'S REPRESENTATIVE.
4. CIRCUITS NOT IN AREA OF WORK THAT ARE AFFECTED BY WORK SHALL BE OPERATIONAL DURING PROJECT. PROVIDE TEMPORARY CIRCUITS AS NECESSARY.
5. CIRCUIT, EQUIPMENT, AND DEVICE REMOVAL SHALL NOT AFFECT THE INTEGRITY OR FUNCTIONALITY OF CIRCUITS TO REMAIN. ALL CIRCUITS TO REMAIN SHALL BE MAINTAINED. PROVIDE ALL NECESSARY CIRCUIT MODIFICATIONS AND EXTENSIONS.
6. WHERE REMOVALS LEAVE HOLES AND DAMAGED SURFACES EXPOSED IN THE FINISHED WORK, PATCH AND REPAIR THESE HOLES AND DAMAGED SURFACES TO MATCH ADJACENT FINISHED SURFACES. WHERE WORK IS TO BE APPLIED TO EXISTING SURFACES, PERFORM REMOVALS, AND PATCHING IN A MANNER TO PRODUCE SURFACES SUITABLE FOR RECEIVING WORK. COORDINATE ALL WORK WITH CONTRACTOR OFFICER'S REPRESENTATIVE.
7. NOT ALL ELECTRICAL EQUIPMENT/DEVICES ARE SHOWN FOR CLARITY. CONTRACTOR SHALL FIELD VERIFY ALL EXISTING CONDITIONS AND REPORT DISCREPANCIES TO CONTRACTOR OFFICER'S REPRESENTATIVE PRIOR TO COMMENCEMENT OF REMOVAL.
8. WHERE REMOVAL OF CONDUIT SYSTEM IS NOT FEASIBLE, REMOVE ALL CONDUCTORS FROM CONDUIT SYSTEM, CUT FLUSH, CAP CONDUIT SYSTEM, AND ABANDON IN PLACE. FEASIBLE IS DEFINED AS BEING LOCATED WITHIN A CONCRETE DUCT BANK OR CONCRETE SLAB. ALL OTHER INSTANCES TO HAVE THE CONDUIT & CIRCUITRY TO BE REMOVED IN THERE ENTIRETY. FIELD VERIFY AND COORDINATE FINAL REQUIREMENTS WITH THE CONTRACTOR OFFICER'S REPRESENTATIVE, TYPICAL.
9. NOT ALL EXISTING UNDERGROUND UTILITIES SHOWN FOR CLARITY. REFER TO SITE PLANS AND GENERAL NOTES ON SHEET E-01 FOR ADDITIONAL SITE INFORMATION. FIELD VERIFY AS REQUIRED.
10. ALL EXISTING UNDERGROUND/SUB-SURFACE ELECTRICAL DUCT BANKS, FEEDERS, AND BRANCH CIRCUITS NOT SHOWN FOR CLARITY. REFER TO ELECTRICAL SINGLE LINE DIAGRAM - DEMOLITION FOR REMOVAL INFORMATION.
11. CONTRACTOR TO COORDINATE SEQUENCE OF REMOVALS WITH THE CONTRACTOR OFFICER'S REPRESENTATIVE. REFER TO SPECIFICATIONS AND DEMOLITION SINGLE LINE DIAGRAM FOR ADDITIONAL INFO.

WARNING - IT IS A VIOLATION OF NEW YORK EDUCATION LAW, SECTION 7209.2, FOR ANY PERSON, UNLESS HE IS ACTING UNDER THE DIRECTION OF A LICENSED PROFESSIONAL ENGINEER OR LAND SURVEYOR, TO ALTER THIS DOCUMENT IN ANY WAY. IF ALTERED, THE ALTERING PERSON SHALL COMPLY WITH THE REQUIREMENTS OF NEW YORK LAW, SECTION 7209.2.

60% DESIGN SUBMITTAL - NOT FOR CONSTRUCTION

US Army Corps of Engineers ®

MARK	DESCRIPTION	DATE

DESIGNED BY: J. ROBINSON
DRAWN BY: D. SANFORD
CHECKED BY: B. WALLDROFF
SUBMITTED BY: J. ROBINSON
SIZE: ANSI D
ISSUE DATE: JANUARY 2021
SOLICITATION NO.: XXXXXX
CONTRACT NO.: W912DR18D0004
##################
##################

U.S. ARMY CORPS OF ENGINEERS
NEW YORK DISTRICT
26 FEDERAL PLAZA
NEW YORK, NEW YORK 10278

JADE STONE ENGINEERING
MECHANICAL, ELECTRICAL, PLUMBING
444 VANDUZEE ST. WATERTOWN NY 13601
P: 315.836.4062 JSTONEENG.COM

WATERVLIET ARSENAL
UST-AST DESIGN PROJECT

ELECTRICAL
OVERALL SITE – PLAN

SHEET ID
E–02

60% DESIGN

USER: ######## FILENAME: P:\00 JSE PROJECTS\2020\282-20 WATERVLIET AST-UST\1-ACTIVE DRAWINGS\3-MPE\E-02.DWG SAVE DATE: 2/1/2021 10:20 AM PLOT DATE: 2/1/2021 10:44 AM