DEFENSE LOGISTICS AGENCY
WEAPONS SUPPORT AT OKLAHOMA CITY
3001 STAFF DRIVE SUITE 2B 95
TINKER AIR FORCE BASE, OKLAHOMA 73145-3015

23 June 2026

IN REPLY
REFER TO: DLA Weapons Support OKC-AOAB
Asaycia Clayton
Phone: 385-591-0412

General Electric Company
1 Neumann WAY
One Hamilton Road
Cincinnati, Ohio 45215

SUBJECT: Letter Solicitation Number SPRTA1-26-R-00306

This solicitation is issued for acquiring supplies identified on Page 2. Please provide the best price and delivery proposal for the part number based on the required quantity listed as well as quantity ranges. Price and delivery proposals may be negotiated upon closing of this solicitation. The inspection and acceptance point will be at origin with FOB origin. Electronic submission is acceptable and preferred.

This correspondence constitutes a letter solicitation as these items are intended to be ordered as firm, fixed price, against the Basic Ordering Agreement, SPE4A1-24-G-0014. Be advised that this requirement may be advertised in the Contract Opportunities website (Sam.gov) for viewing by the general public.

Proposal is expected at the earliest convenience, but no later than 23 July 2026, 3:00 pm CST. Direct any questions or more needed information to asaycia.clayton.1@us.af.mil.

Best Regards,

Asaycia Clayton
Contract Officer
DLA Weapons Support at Oklahoma City, AOAB
3001 Staff Drive, Suite 2B 97
Tinker AFB OK 73145

The required quantity is currently 15 each. The final quantity of this solicitation will be re-evaluated upon receipt of the contractor's proposal and closing of the solicitation.

Cage Code	P/N	NSN	PART NAME	BEQ	Qty Range
07482	2215M18G04	2840-01-675-9398	ROTOR, TURIBNE, AIRCRAFT	15 ea.	3 ea. to 15 ea.

Receiving Report Required.
Higher Level Contract Quality Requirements AND Standard Inspection Required.

Requested Delivery: SHIP TO (CUSTOMER): SW3211

CLIN 0001: Quantity 15 each on or before

New Manufacture. Early or partial delivery is acceptable.
DELIVERY NUMBER 1: 1 on 1 APR 2027.
DELIVERY NUMBER 2: 1 on 1 MAY 2027.
DELIVERY NUMBER 3: 1 on 1 JUN 2027.
DELIVERY NUMBER 4: 1 on 1 JUL 2027.
DELIVERY NUMBER 5: 1 on 1 AUG 2027.
DELIVERY NUMBER 6: 1 on 1 SEPT 2027.
DELIVERY NUMBER 7: 1 on 1 OCT 2027.
DELIVERY NUMBER 8: 1 on 1 NOV 2027.
DELIVERY NUMBER 9: 1 on 1 DEC 2027.
DELIVERY NUMBER 10: 1 on 1 JAN 2028.
DELIVERY NUMBER 11: 1 on 1 FEB 2028.
DELIVERY NUMBER 12: 1 on 1 MAR 2028.
DELIVERY NUMBER 13: 1 on 1 APR 2028.
DELIVERY NUMBER 14: 1 on 1 MAY 2028.
DELIVERY NUMBER 15: 1 on 1 JUNE 2028.

Packaging Requirements: See Attachment: Packaging Requirements, AFMC 158.

Transportation Requirements: See Attachment: Transportation Data for Solicitations, DD Form 1653.

Packaging Instruction: See Attachment: Special Packaging Instruction, DD Form 2169

IUID Requirement: IUID is required.

TRANSPORTATION DATA FOR SOLICITATIONS

PURCHASE INSTRUMENT NUMBER: FD20302501796-00

DATE INITIATED: 13 MAY 2025

COMMODITY: See Continuation

STOCK NUMBER: See Continuation

F.O.B. TERMS RECOMMENDED AS BEST SUITED FOR THIS PROCUREMENT

[X] ORIGIN [ ] DESTINATION [ ] OTHER *(Specify)* [ ] DATA / FIRST ARTICLE F.O.B. DESTINATION

TRANSPORTATION PROVISIONS / CLAUSES	FAR CITATION
F.O.B. Origin	52.247-29
Freight Classification Description	52.247-53
Marking of Shipments	47.305-10
Contact DCMA Transportation Contact DCMA Transportation on ALL "DCMA Administered" contracts prior to shipment for shipping instructions using the DCMA Shipment Instruction Request (SIR) eTool System, at http://www.dcma.mil <http://www.dcma.mil/> for ALL FOB: Origin, Foreign Military Sales (FMS), and FOB: Destination OCONUS/Export movements to obtain the appropriate DOD regulatory clearances, shipping documentation and instructions from your cognizant DCMA Transportation Office. If you are new to DCMA, and do not already have a SIR eTool account, you will first need to request an account via DCMA External Web Access Management (EWAM) application which can be accessed at http://www.dcma.mil. If you need additional assistance, email DCMA Transportation Group at: Transportation.Division@dcma.mil. Do not move any freight to a water or aerial port prior to contacting DCMA or it will become frustrated. Failure to contact the responsible DCMA may result in vendor incurring additional expenditures.	Vendor Transportation Instructions

TACRN:

AAA

TRANSPORTATION FUNDS INFORMATION:

Purchase Instrument Line LOA: 97X4930.FC04 645 47GT 15380P 01N000 00000 000000 503000 F03000 FSR: 013352 PSR: K38770

First Destination Transportation Account Code: FRS2

Miscellaneous Obligation / Reimbursement Document:

Second Destination Transportation Account Code:

FMS LOA:

Additional Funding Information:

ITEM / SHIP TO(s):

NSN / Pseudo NSN: 2840016759398PR

Requisition Number:

Purchase Instrument Line Item Number: 0001

Supplemental Address:

Ship to (DoDAAC / MAPAC): SW3211

FMS Case:

Mark For: ACCT 09

Ship To (Address): DLA DISTRIBUTION DEPOT OKLAHOMA
3301 F AVE CEN REC BLDG 506 DR 22
TINKER AFB OK 73145-8000
73145 - 8000
USA

WPOD:

APOD:

BBP / CCP:

RIC: 1

Ship To (Remarks):

EVALUATION OF PORT BID OR PROPOSAL:

SOLICITATION DATA NOTES:

OTHER TRANSPORTATION DATA:

NAME	ORGANIZATION / OFFICE SYMBOL	COMMERCIAL / DSN PHONE	SIGNATURE	DATE
Etters, Mickie J	406 SCMS / GULAA	478-222-0125 / 472-0125	//SIGNED//Etters, Mickie J	13 MAY 2025

PACKAGING REQUIREMENTS

PURCHASE INSTRUMENT NUMBER: FD20302501796-00	**VERSION:** 1
MIL-STD 129 REVISION: R	**MIL-STD 2073-1 REVISION:** E

THE FOLLOWING STATEMENT IS IN COMPLIANCE WITH THE UNITED NATIONS-IMPLEMENTED RESTRICTIONS ON WOOD PACKAGING MATERIAL (WPM). THIS REQUIREMENT IS SPECIFICALLY CONCERNED WITH INVASIVE SPECIES SUCH AS THE PINEWOOD NEMATODE. WPM IS DEFINED AS WOOD PALLETS, SKIDS, LOAD BOARDS, PALLET COLLARS, WOODEN BOXES, REELS, DUNNAGE, CRATES, FRAMES, AND CLEATS. THE STATEMENT BELOW CITES THE REQUIREMENTS IN DETAIL AND COVERS LUMBER FOR BUILDING CONTAINERS AND PALLETS USED FOR DELIVERIES RESULTING IN SHIPMENTS WORLDWIDE (DIRECT, OR THROUGH AIR LOGISTICS CENTERS (ALC), CONTAINER CONSOLIDATION POINTS (CCP), OR OTHER BASES). WOODEN LUMBER, WOODEN PALLET AND PACKAGING/CONTAINER STATEMENT:
ALL WOODEN LUMBER, WOODEN PALLET'S, AND WOODEN CONTAINERS PRODUCED ENTIRELY OR IN PART OF WOOD PACKING MATERIAL (WPM) SHALL BE CONSTRUCTED FROM DEBARKED WOOD IN ADDITION TO THE APPLICATION OF HEAT-TREATED (HT) MATERIAL (HT TO 56 DEGREES CENTIGRADE OR 133 DEGREES FAHRENHEIT FOR 30 MINUTES). CERTIFICATION/MARKING IS REQUIRED BY AN ACCREDITED AGENCY RECOGNIZED BY THE AMERICAN LUMBER STANDARDS COMMITTEE (ALSC). FOR REFERENCE DOCUMENTATION, SEE LATEST REVISION OF "INTERNATIONAL STANDARDS FOR PHYTOSANITARY MEASURES" (ISPM)NO.15), "REGULATION OF WOOD PACKAGING MATERIAL IN INTERNATIONAL TRADE."

PACRN:	PACKAGING REQUIREMENT:	PRESERVATION LEVEL:	PACKAGING LEVEL:	SPI:	SPI REV:	SPI DATE:
AAA	MIL-STD-2073-1 / SPI	MIL	B	F011465709	J	16134 - 13 MAY 2016

ITEM(S):

2840016759398PR

CODED DATA:

QUP	ICQ	PRES METH	CD	PRES MTL	WRAP MTL	CUSH DUNN	CT	UNIT CONT	INT CONT	UCL	SPEC MKG	UNIT PACK WEIGHT	UNIT PACK LENGTH	UNIT PACK WIDTH	UNIT PACK DEPTH	UNIT PACK CUBE	OPI

ADDITIONAL PACKAGING AND CONTAINER MARKING REQUIREMENTS:

SUPPLEMENTAL PACKAGING INSTRUCTION TEXT:

VENDOR PACKAGING INSTRUCTIONS:

Military Packaging and Marking
Items shall be packaged in accordance with MIL-STD-2073-1, Standard Practice for Military Packaging. Shipping and storage markings shall be in accordance with MIL-STD-129, Standard Practice for Military Marking.
Shipping Container Marking
Shipping containers shall be marked meeting the following criteria: (a) MIL-STD-129, Standard Practice for Military Marking. (b) Additional marking and/or bar coding requirements exceeding those of MIL-STD-129 (e.g., unit serial numbers, original equipment manufacturers (OEM) name, or OEM model number, as specified on the AFMC Form 158.

ORGANIZATION / OFFICE SYMBOL:	PACKAGING SPECIALIST:	PHONE NUMBER:	SIGNATURE:	DATE:
406 SCMS / GULAA	Real, Billy S	405-582-9721 / 852-9721	//SIGNED//Real, Billy S	25133 - 13 MAY 2025

SPECIAL PACKAGING INSTRUCTION

CODE ID	SPI NO (TPO)
98748	F 01-146-5709
	SHEET 1 OF 5

PART OR DRAWING NO.	NATIONAL STOCK NO.	CURR REV
9550M18G01	2840-01-146-5709 JF	J

ITEM NOMENCLATURE
HPT ROTOR

ORIG DATE 89123

ILL D. CHOI
PS F. PITTMAN
CHKR T.C. JONES
ENGR M. HEADLEE
AUTH C. TROTTER

U.S. AIR FORCE OKLAHOMA CITY ALC 6 APPROVED PACKAGING

PRESERVATION IAW MIL-STD-2073

SERVICEABLE METHOD: 10
UNSERVICEABLE METHOD: 10

QUP 001

ICQ N/A

CLEANING & DRYING IAW MIL-STD-2073

PRESERVATIVE N/A

MARKING IAW MIL-STD-129

SPECIAL MARKINGS:

A) SPI NO. F 01-146-5709
B) REUSABLE CONTAINER AND DUNNAGE DO NOT DESTROY.
C) NOT FOR OUTSIDE STORAGE.

CLOSURE

LEVEL A: IAW ASTM-D 6256
LEVEL B: N/A

PACKING AS SPECIFIED BELOW AND BILL OF MATERIALS

LEVEL	SPEC	ST	TY	CL	VRTY	GR	TR
A	ASTM-D 6256	A	I	2	N/A	N/A	B
B	N/A	N/A	N/A	N/A	N/A	N/A	N/A

	LEVEL A	LEVEL B
GROSS CU FT	33.644	N/A
GROSS WT LBS	350	N/A
DESIGN FRAGILITY G	N/A	N/A

CNTNR I.D.	LENGTH	WIDTH	DEPTH
LEVEL A:	46	39	23 1/2
LEVEL B:	N/A	N/A	N/A

CNTNR O.D.	LENGTH	WIDTH	DEPTH
LEVEL A:	48 1/8	41 1/8	29 3/8
LEVEL B:	N/A	N/A	N/A

ITEM DIM	30	30	19 1/2
ITEM WT LBS	249 LBS		

REVISIONS

LTR	DESCRIPTION	DATE
E	REVISED	89123
F	REVISED	92282
G	REVISED	01043
H	CHANGED THICKNESS OF P/N 7	05159
J	CHANGED DIAMETER OF P/N 11 & DELETED TABLE	16134

PART NO.	QTY.	NOMENCLATURE OR DESCRIPTION	SIZE (INCHES UNLESS SPECIFIED) TOLERANCES ON FRAC. ± 1/8, DECIMAL ± .10, ANGLES ± 1°.	MATERIAL SPECIFICATION
6	8	CARRIAGE BOLTS	3/8 X 7	FF-B-584 W/ LW & NUT
5	6	CARRIAGE BOLTS	3/8 X 8	FF-B-584 W/ LW & NUT
4	2	HEADERS	4 X 4 X 39	ASTM-D 6199
3	1	FLOOR	46 X 39 X 1/2	A-A-55057
2	3	SKIDS	4 X 4 X 48 (NOM.)	ASTM-D 6199
1	1	CONTAINER I.D.	46 X 39 X 23 1/2	SEE LEVEL OF PACK

NOTES:

ALL WOODEN PALLETS AND WOOD CONTAINERS PRODUCED OF NON-MANUFACTURED WOOD SHALL BE CONSTRUCTED FROM HEAT TREATED (HT TO 56°C (CORE TEMPERATURE) FOR 30 MIN.) MATERIAL AND CERTIFIED BY AN ACCREDITED AGENCY RECOGNIZED BY THE AMERICAN LUMBER STANDARDS COMMITTEE (ALSC) IN ACCORDANCE WITH NON-MANUFACTURED WOOD PACKING POLICY AND NON-MANUFACTURED WOOD PACKING ENFORCEMENT REGULATIONS BOTH DATED MAY 30, 2001.

SPECIAL PACKAGING INSTRUCTION	CODE ID 98748	SPI NO (TPO) F 01-146-5709
ITEM NOMENCLATURE HPT ROTOR		SHEET 2 OF 5

PART NO.	QTY.	NOMENCLATURE OR DESCRIPTION	SIZE (INCHES UNLESS SPECIFIED) TOLERANCES ON FRAC. ± 1/8, DECIMAL ± .10, ANGLES ± 1°.	MATERIAL SPECIFICATION
7	1	BASE SUPPORT	39 X 39 X 1 1/2	A-A-55057, DETAIL 'A' 2 3 4
8	8	HORIZONTAL MEMBER	37 X 2 1/4 X 1 1/2	MIL-S-21041
9	4	VERTICAL MEMBER	18 X 2 1/4 X 1 1/2	MIL-S-21041
10	4	DIAGONAL MEMBER	36 X 2 1/4 X 1 1/2	MIL-S-21041
11	1	PLUG	5 3/4 DIAMETER X 1 1/2	A-A-55057 4 5
12	1	TOP MOUNT	20 X 20 X 3/4	A-A-55057 4 5 7
13	2	TOP TIE DOWN SUPPORT	37 X 2 1/4 X 1 1/2	MIL-S-21041
14	3	CARRIAGE BOLTS	3/8 X 3	FF-B-584 W/ LW & NUT
15	6	CARRIAGE BOLTS	3/8 X 1 1/2	FF-B-584 W/ LW & NUT 5
16	A/R	CUSHIONING	AS REQUIRED	A-A-59136 OR EQUAL 4
17	1	WRAP	AS REQUIRED	MIL-PRF-121 6
18	A/R	ADHESIVE	AS REQUIRED	QPL-MMM-A-1617 OR EQUIVALENT

NOTES:

1) REMOVE TOP MOUNT SUPPORT TO PACK AND REMOVE ITEM.
2) CENTER 13 1/4" DIAMETER HOLE IN P/N 7, AS SHOWN IN DETAIL 'A'.
3) SECURE P/N 7 TO CONTAINER BASE BY NAILING.
4) BOND CUSHIONING P/N 16 TO PLUG P/N 11 TOP MOUNT P/N 12 SUPPORT BASE P/N 7 AND CONTAINER BASE WHERE ITEM CONTACTS WOOD.
5) CONSTRUCT TOP MOUNT SUPPORT AS SHOWN IN DETAIL 'B', CENTERING & SECURING THE PLUG P/N 11 TO TOP MOUNT P/N 12 USING CARRIAGE BOLTS P/N 15 EQUALLY SPACED.
6) WRAP P/N 17 SHALL COMPLETELY ENCASE ITEM.
7) THICKNESS OF TOP MOUNT P/N 12 MAY BE INCREASED TO INSURE A TIGHT PACK.

SPECIAL PACKAGING INSTRUCTION	CODE ID 98748	SPI NO (TPO) F 01-146-5709
ITEM NOMENCLATURE HPT ROTOR		SHEET 3 OF 5

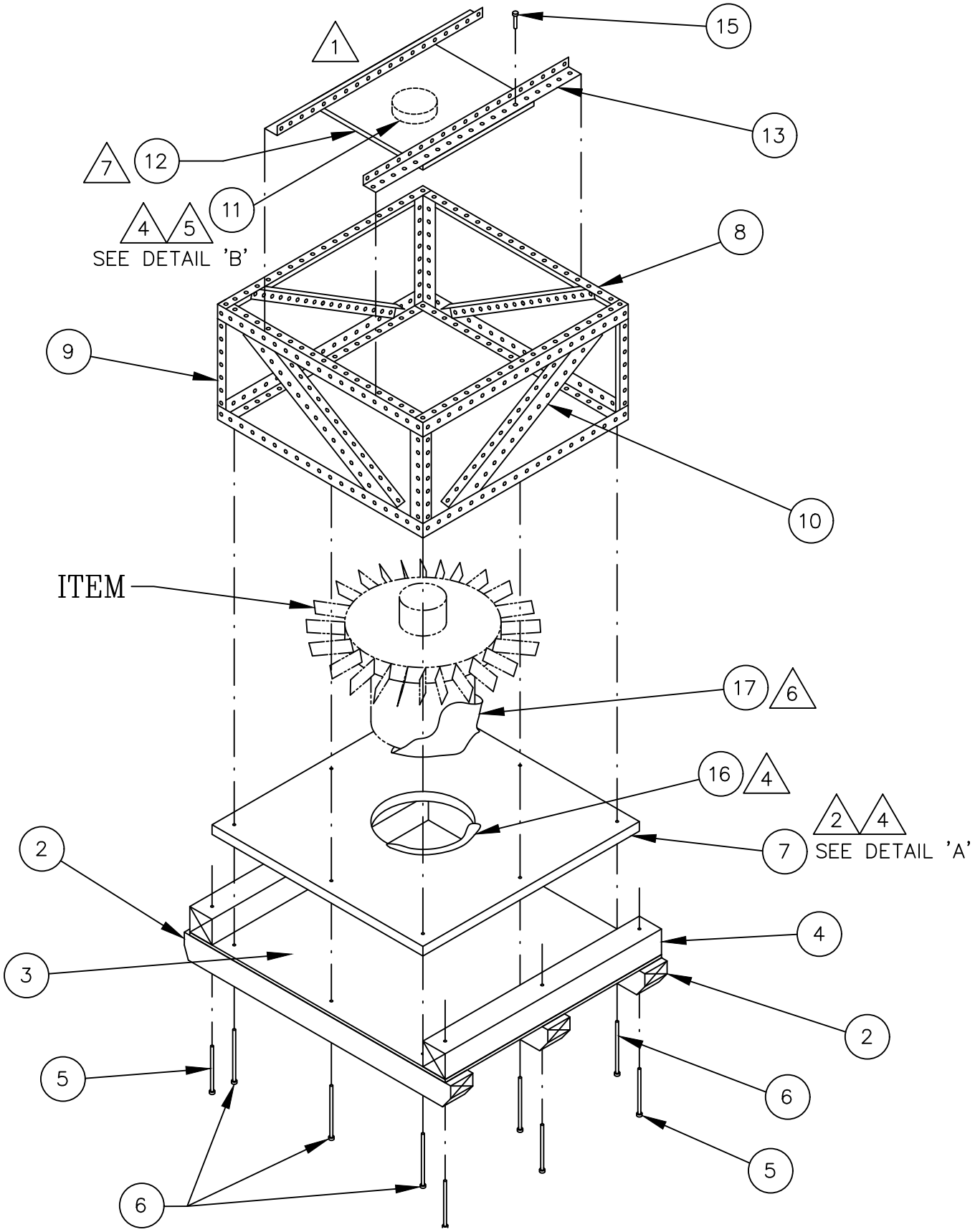

SPECIAL PACKAGING INSTRUCTION	CODE ID 98748	SPI NO (TPO) F 01-146-5709
ITEM NOMENCLATURE HPT ROTOR		SHEET 4 OF 5

DETAIL 'A'
BASE SUPPORT (7)

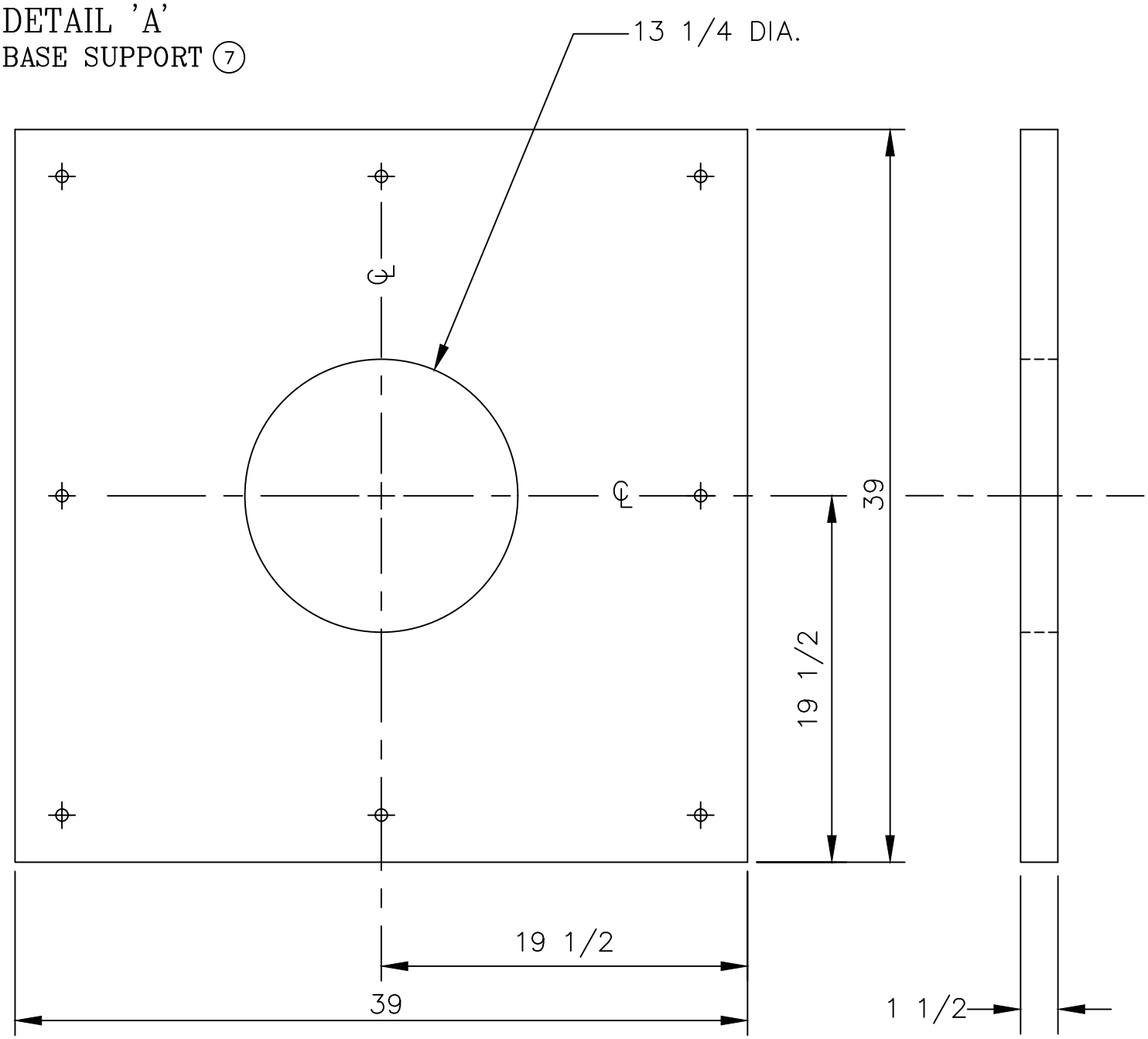

SPECIAL PACKAGING INSTRUCTION	CODE ID 98748	SPI NO (TPO) F 01-146-5709
ITEM NOMENCLATURE HPT ROTOR		SHEET 5 OF 5
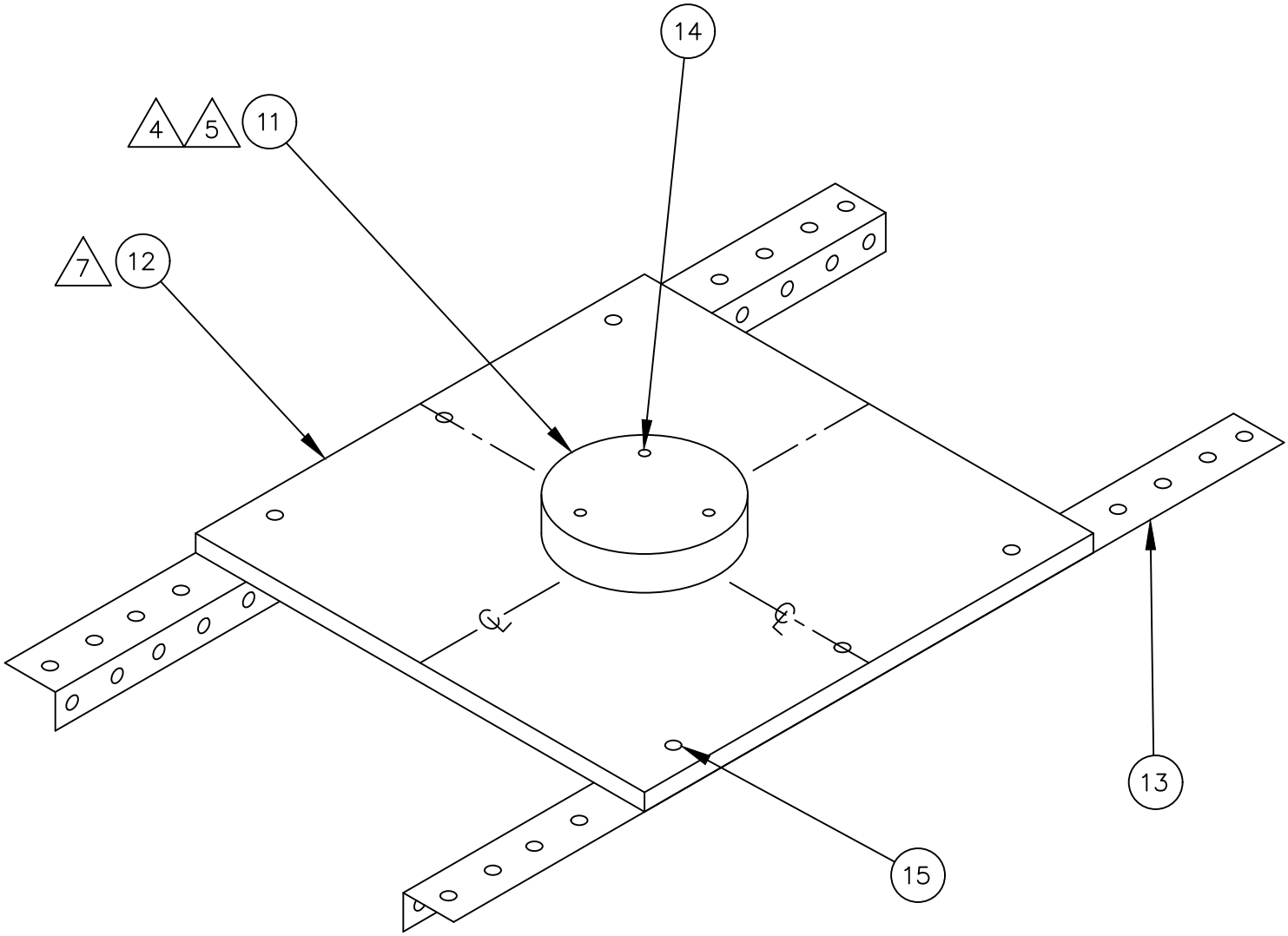
DETAIL 'B'
TOP MOUNT SUPPORT