ZONE 100 LAN INTERFACE IN BD-104

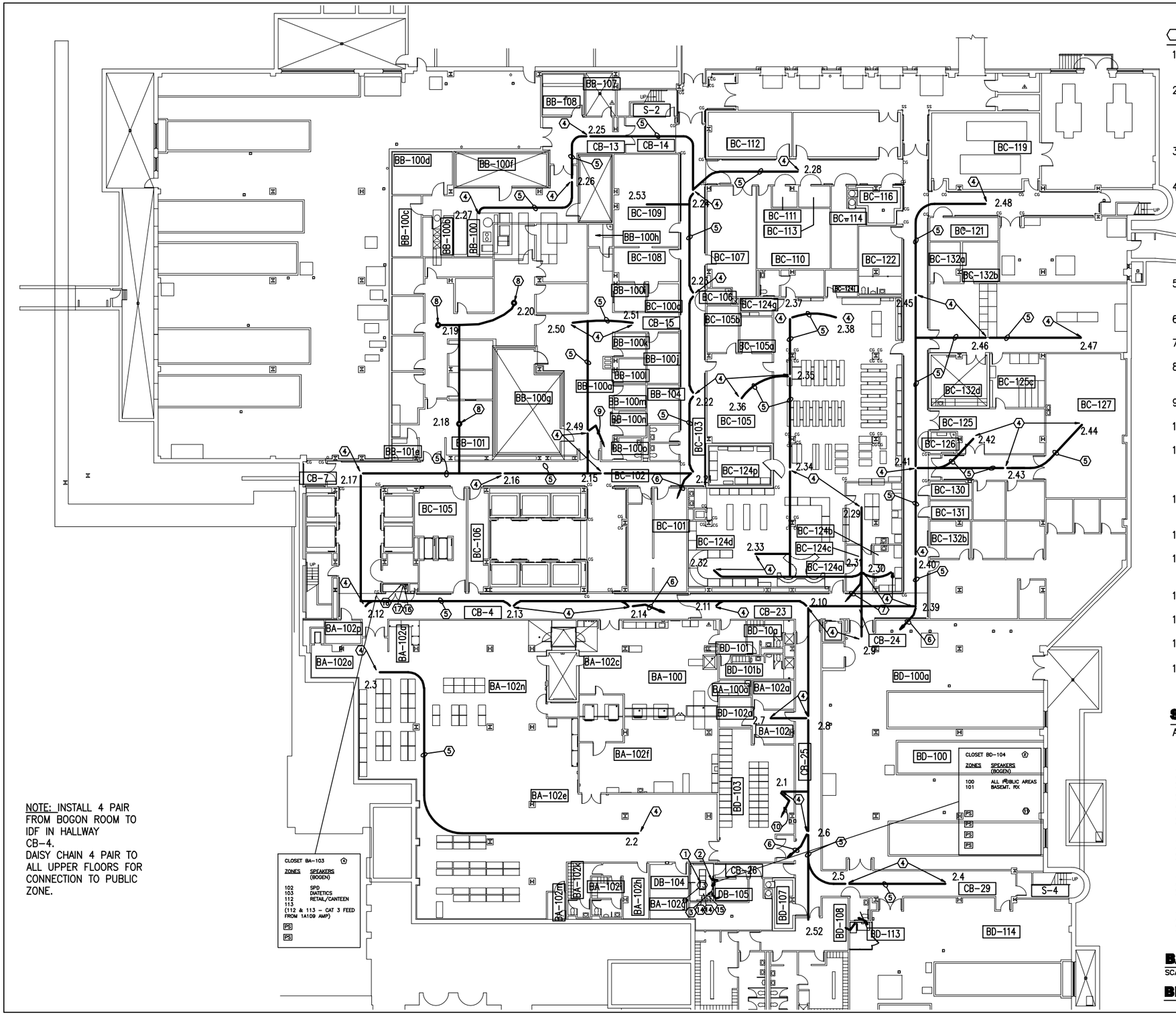

NOTE: INSTALL 4 PAIR FROM BOGON ROOM TO IDF IN HALLWAY CB-4.
DAISY CHAIN 4 PAIR TO ALL UPPER FLOORS FOR CONNECTION TO PUBLIC ZONE.

DRAWING NOTES

1. EXISTING AMPLIFIERS SERVING ZONES 100 AND 101 TO BE REMOVED.
2. EXISTING VALCOM VIP-804 LAN INTERFACE DEVICE AND FOUR SPARE VP-2024 POWER SUPPLIES. PROVIDE NEW SPEAKER CABLING AS SHOWN IN ZONE INTERFACE WIRING DIAGRAM WITH SELF-AMPLIFIED SPEAKERS ON DRAWING E42.
3. PROVIDE ONE NEW VALCOM #VI-2024 POWER SUPPLY. CONNECT TO CLOSEST EXISTING 120 VOLT CIRCUIT.
4. REPLACE EXISTING CEILING SPEAKER WITH NEW VALCOM V-1020C LAY-IN TYPE SELF-AMPLIFIED SPEAKER. REMOVE ALL EXISTING WIRING BACK TO EXISTING AMPLIFIER. RUN NEW 4 PAIR CATEGORY 3 PLENUM CABLE EQUAL TO GENERAL CABLE #2131245 TO EXISTING BOGEN ROOM BD-104 AND TERMINATE AS SHOWN ON ZONE INTERFACE WIRING DIAGRAM WITH SELF-AMPLIFIED SPEAKERS ON DRAWING E42.
5. NEW SPEAKER CABLE TO BE RUN CONCEALED ABOVE EXISTING CEILING.
6. CONNECT TO ZONE 100.
7. CONNECT TO ZONE 101.
8. NEW VALCOM V-1020C LAY-IN TYPE SELF-AMPLIFIED SPEAKER. REFER TO NOTE 4 FOR WIRING REQUIREMENTS.
9. CONNECT TO ZONE 103.
10. CONNECT TO ZONE 102.
11. 2 PORT LAN SYSTEM INTERFACE DEVICE – REFER TO DIAGRAM ON DRAWING E16. LABEL EACH OUTPUT PORT TO IDENTIFY PAGING ZONE SERVED.
12. EXISTING PAGING AMPLIFIERS (2) TO REMAIN. REFER TO DIAGRAM ON DRAWING PG-25.
13. EXISTING LAN RACK.
14. 8.PROVIDE A NEW 20 AMP, 120 VOLT DOUBLE DUPLEX RECEPTACLE AT 42" A.F.F.
15. NEW POWER SUPPLY.
16. CAT3 CABLE TO SIGNAL ROOM 1A-109.
17. CAT6 CABLE TO SIGNAL ROOM 2A-119.
18. (1) NEW 4-PORT LAN DEVICE.

SPEAKERS 2.52 AND 2.53 ARE ADDITIONALLY REQUESTED RFC#1

SPECIAL NOTES

A. REFER TO PAGING ZONE SCHEDULE ON DRAWING E42 AND OVERALL PAGING SYSTEM RISER DIAGRAM ON DRAWING E43.

ZONE 100
SPEAKER NUMBERS = 2.39 TO 2.48
SPEAKERS 2.4 TO 2.11; 2.52
SPEAKERS 2.21 TO 2.28; 2.53
SPEAKERS 2.12 TO 2.20

ZONE 101
SPEAKERS 2.29 TO 2.37

ZONE 102
SPEAKERS 2.1 TO 2.3

ZONE 103
SPEAKERS 2.49 TO 2.51

BASEMENT FLOOR
SCALE: 1/32"=1-0"
BLDG.330

SHEET #	PROJECT NO.	ISSUE DATE
330-E20	552-08-206	03/21/08

DEPARTMENT OF VETERANS AFFAIRS
OVERHEAD PAGING SYSTEM PHASE II
DAYTON MEDICAL CENTER

CONTECH DESIGN, INCORPORATED
Consulting Professional Engineers
519 Windsor Park Dr., Centerville, Ohio 45459
Phone: (937)435-3722 Fax: (937) 435-4685
Email: engineer@contechdesign.com
Engineer Project # 07020

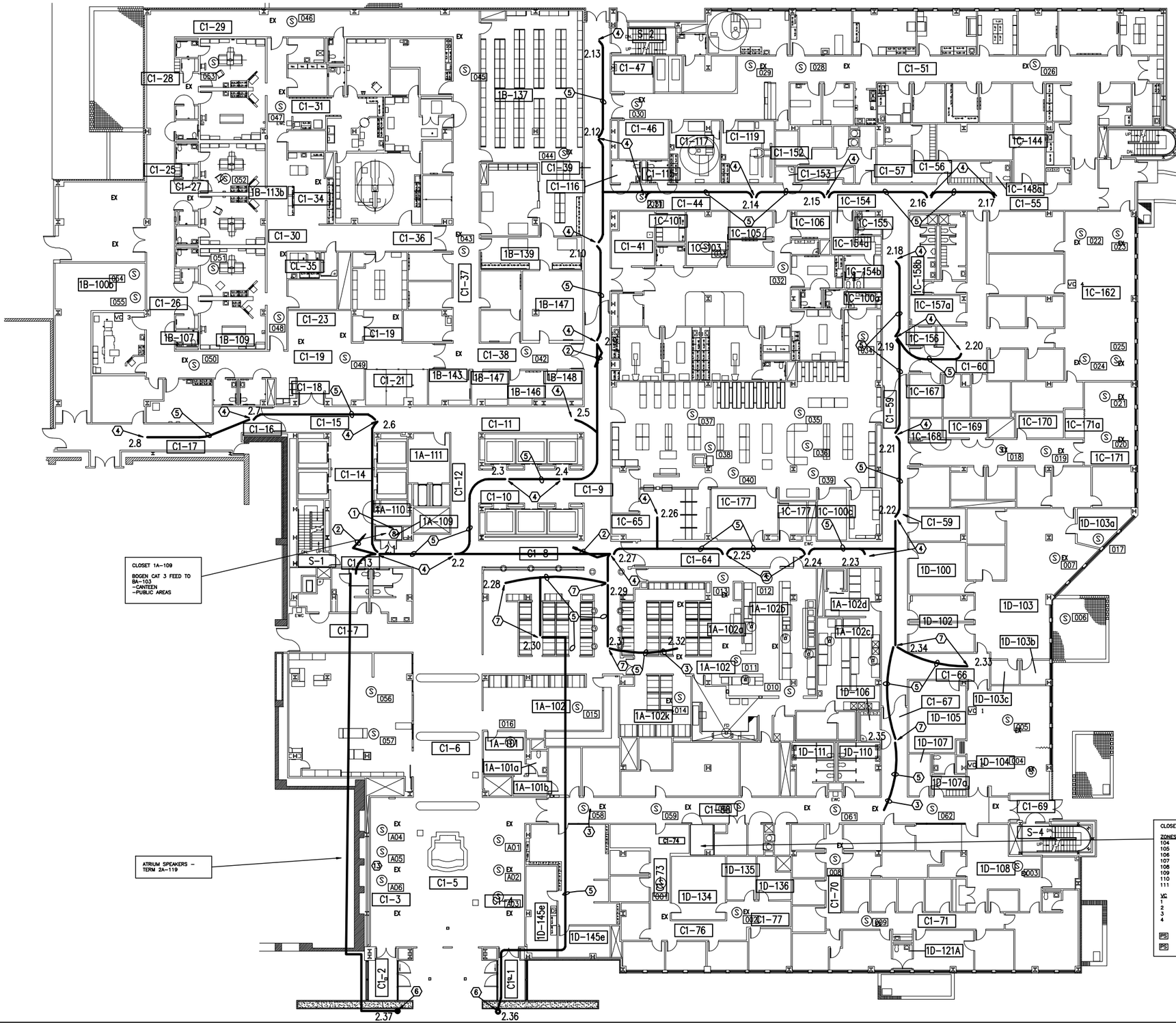

DRAWING NOTES

1. PROVIDE THREE NEW VALCOM #VI-2024 POWER SUPPLIES. CONNECT TO CLOSEST EXISTING 120 VOLT CIRCUIT.
2. RUN NEW SPEAKER CABLE TO NEW POWER SUPPLIES IN SIGNAL CLOSET 1A-109. PROVIDE NEW SPEAKER CABLING AS SHOWN IN ZONE 100 INTERFACE WIRING DIAGRAM ON DRAWING E41A, B, C & D.
3. CONNECT TO EXISTING SPEAKER CIRCUIT.
4. REPLACE EXISTING CEILING SPEAKER WITH NEW VALCOM V-1020C LAY-IN TYPE SELF-AMPLIFIED SPEAKER. REMOVE ALL EXISTING WIRING BACK TO EXISTING AMPLIFIER. RUN NEW 4 PAIR CATEGORY 3 PLENUM CABLE EQUAL TO GENERAL CABLE #2131245 TO ZONE 100 LAN INTERFACE IN BOGEN ROOM BD-104 AND TERMINATE AS SHOWN ON ZONE 100 INTERFACE WIRING DIAGRAM ON DRAWING E41A, B, C & D.
5. NEW SPEAKER CABLE TO BE RUN CONCEALED ABOVE EXISTING CEILING.
6. NEW VALCOM V-1030C HORN TYPE SELF-AMPLIFIED SPEAKER. SURFACE MOUNT AT 10'-0" A.F.F.
7. REPLACE EXISTING CEILING SPEAKER WITH NEW VALCOM V-1020C LAY-IN TYPE SELF-AMPLIFIED SPEAKER. RUN NEW 4 PAIR CATEGORY 3 PLENUM CABLE EQUAL TO GENERAL CABLE #2131245 AND CONNECT TO EXISTING ZONE AS SHOWN.
8. EXISTING PAGING AMPLIFIERS (3) TO REMAIN. REFER TO DIAGRAM ON DRAWING E25.
9. NEW 4 PORT LAN SYSTEM INTERFACE DEVICE. REFER TO DIAGRAM ON DRAWING E25. LABEL EACH OUTPUT PORT TO IDENTIFY PAGING ZONE SERVED.
10. PROVIDE THREE NEW POWER SUPPLIES - VALCOM VP-2024 - FOR FUTURE SELF-AMPLIFIED SPEAKER CIRCUITS.
11. NEW 4 PORT LAN SYSTEM INTERFACE DEVICE. REFER TO DIAGRAM ON DRAWING E16. LABEL OUTPUT PORT TO IDENTIFY PAGING ZONE SERVED.
12. NEW REMOTE MOUNTED MICROPHONE MOUNTED AT 12'-0: A.F.F.
13. SPEAKER CABLES SHOWN ON THIS DRAWING HAVE INTEGRAL AMPLIFIER AND VOLUME CONTROL FOR EACH SPEAKER. ALL SPEAKER AND VOLUME CONTROL CABLES TERMINATE ON KRONE PUNCH DOWN BLOCK IN SIGNAL ROOM.

SPECIAL NOTES

A. REFER TO PAGING ZONE SCHEDULE ON DRAWING E42 AND OVERALL PAGING SYSTEM RISER DIAGRAM ON DRAWING E43.

B. SPEAKERS MARKED "EX" REPLACED UNDER PHASE I.

ZONE 100
SPEAKER NUMBERS = 2.1 TO 2.37, 2.36 AND 37

ZONE 108
SPEAKER NUMBERS = 2.28 TO 2.32

ZONE 109
SPEAKER NUMBER = 8

ZONE 110
SPEAKER NUMBERS = 2.33 TO 2.35

SHEET #	PROJECT NO.	ISSUE DATE
330-E21	552-08-206	03/21/08

DEPARTMENT OF VETERANS AFFAIRS
OVERHEAD PAGING SYSTEM PHASE II
DAYTON MEDICAL CENTER

CONTECH DESIGN, INCORPORATED
Consulting Professional Engineers
519 Windsor Park Dr., Centerville, Ohio 45459
Phone: (937)435-3722 Fax: (937) 435-4685
Email: engineers@contechdesign.com
Engineer Project # 07020

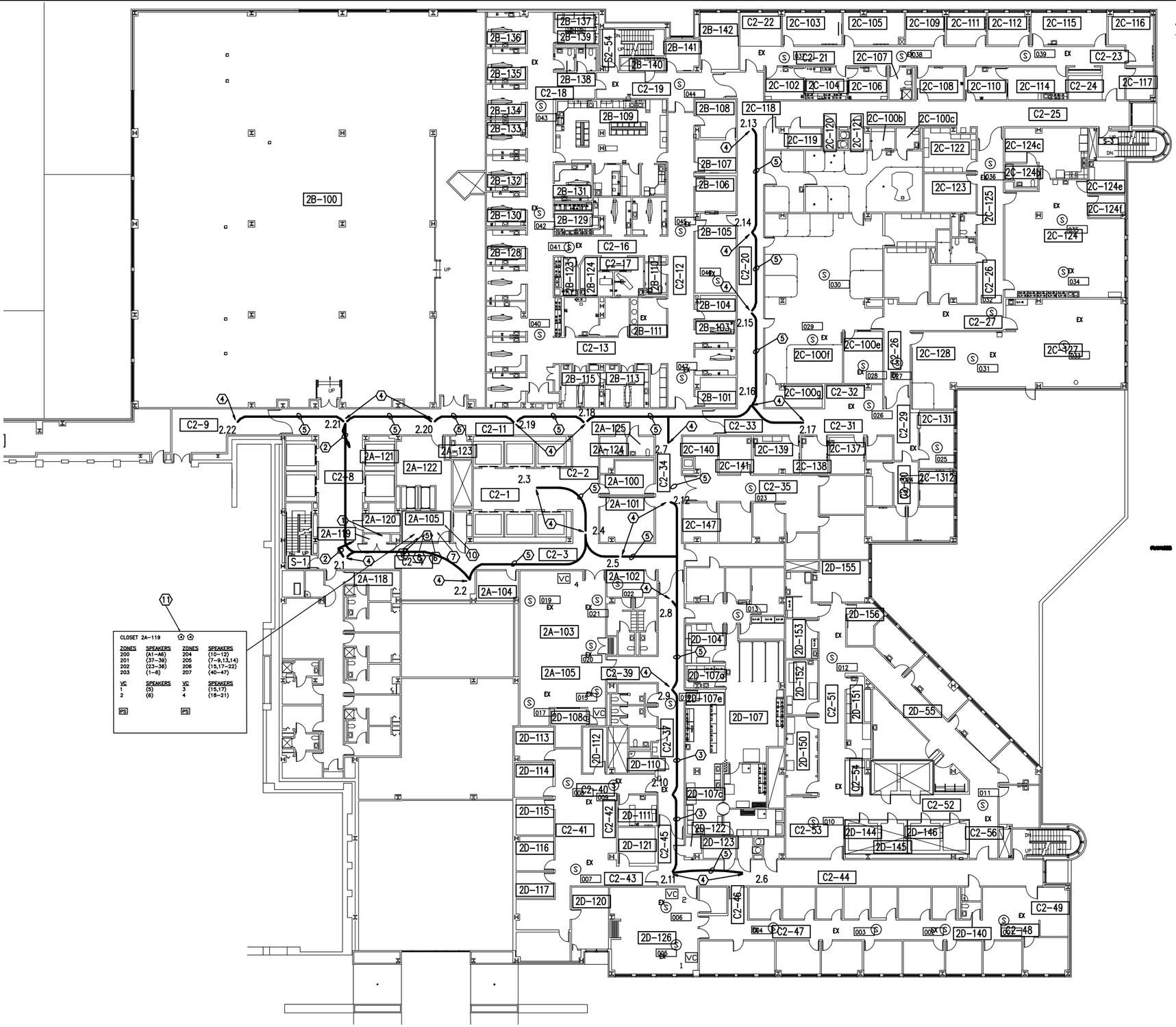

DRAWING NOTES

1. PROVIDE TWO NEW VALCOM #VI-2024 POWER SUPPLIES. CONNECT TO CLOSEST EXISTING 120 VOLT CIRCUIT.
2. RUN NEW SPEAKER CABLE TO NEW POWER SUPPLIES IN SIGNAL CLOSET 2A-119. PROVIDE NEW SPEAKER CABLING AS SHOWN IN ZONE 100 INTERFACE WIRING DIAGRAM ON DRAWING E41A, B, C & D.
3. CONNECT TO EXISTING SPEAKER CIRCUIT.
4. REPLACE EXISTING CEILING SPEAKER WITH NEW VALCOM V-1020C LAY-IN TYPE SELF-AMPLIFIED SPEAKER. REMOVE ALL EXISTING WIRING BACK TO EXISTING AMPLIFIER. RUN NEW 4 PAIR CATEGORY 3 PLENUM CABLE EQUAL TO GENERAL CABLE #2131245 TO ZONE 100 LAN INTERFACE IN BOGEN ROOM BD-104 AND TERMINATE AS SHOWN ON ZONE 100 INTERFACE WIRING DIAGRAM ON DRAWING E41A, B, C & D.
5. NEW SPEAKER CABLE TO BE RUN CONCEALED ABOVE EXISTING CEILING.
6. (2) NEW 4-PORT LAN DEVICES. REFER TO DIAGRAM ON DRAWING E25.
7. (2) NEW POWER SUPPLIES.
8. EXISTING LAN RACK; (1) NEW 24-PORT UNLOADED PATCH PANEL.
9. (2) CAT6 CABLES TO RACK IN 2A-119.
10. (1) NEW V-9993 (NOISE SENSING VOLUME CONTROL).
11. SPEAKER CABLES SHOWN ON THIS DRAWING HAVE INTEGRAL AMPLIFIER AND VOLUME CONTROL FOR EACH SPEAKER. ALL SPEAKER AND VOLUME CONTROL CABLES TERMINATE ON KRONE PUNCH DOWN BLOCK IN SIGNAL ROOM.

SPECIAL NOTES

A. REFER TO PAGING ZONE SCHEDULE ON DRAWING E42 AND OVERALL PAGING SYSTEM RISER DIAGRAM ON DRAWING E43.

B. SPEAKERS MARKED "EX" REPLACED UNDER PHASE I.

ZONE 100
SPEAKER NUMBERS = 2.1 TO 2.5, 2.7, 2.12 TO 2.22

ZONE___
SPEAKER NUMBERS = 2.6, 2.8 TO 2.11

SECOND FLOOR
SCALE: 1/32"=1-0"
BLDG.330

NORTH

SHEET #	PROJECT NO.	ISSUE DATE
330-E22	552-08-206	03/21/08

DEPARTMENT OF VETERANS AFFAIRS
OVERHEAD PAGING SYSTEM PHASE II
DAYTON MEDICAL CENTER

CONTECH DESIGN, INCORPORATED
Consulting Professional Engineers
519 Windsor Park Dr., Centerville, Ohio 45459
Phone: (937)435-3722 Fax: (937) 435-4685
Email: engineers@contechdesign.com
Engineer Project # 07020

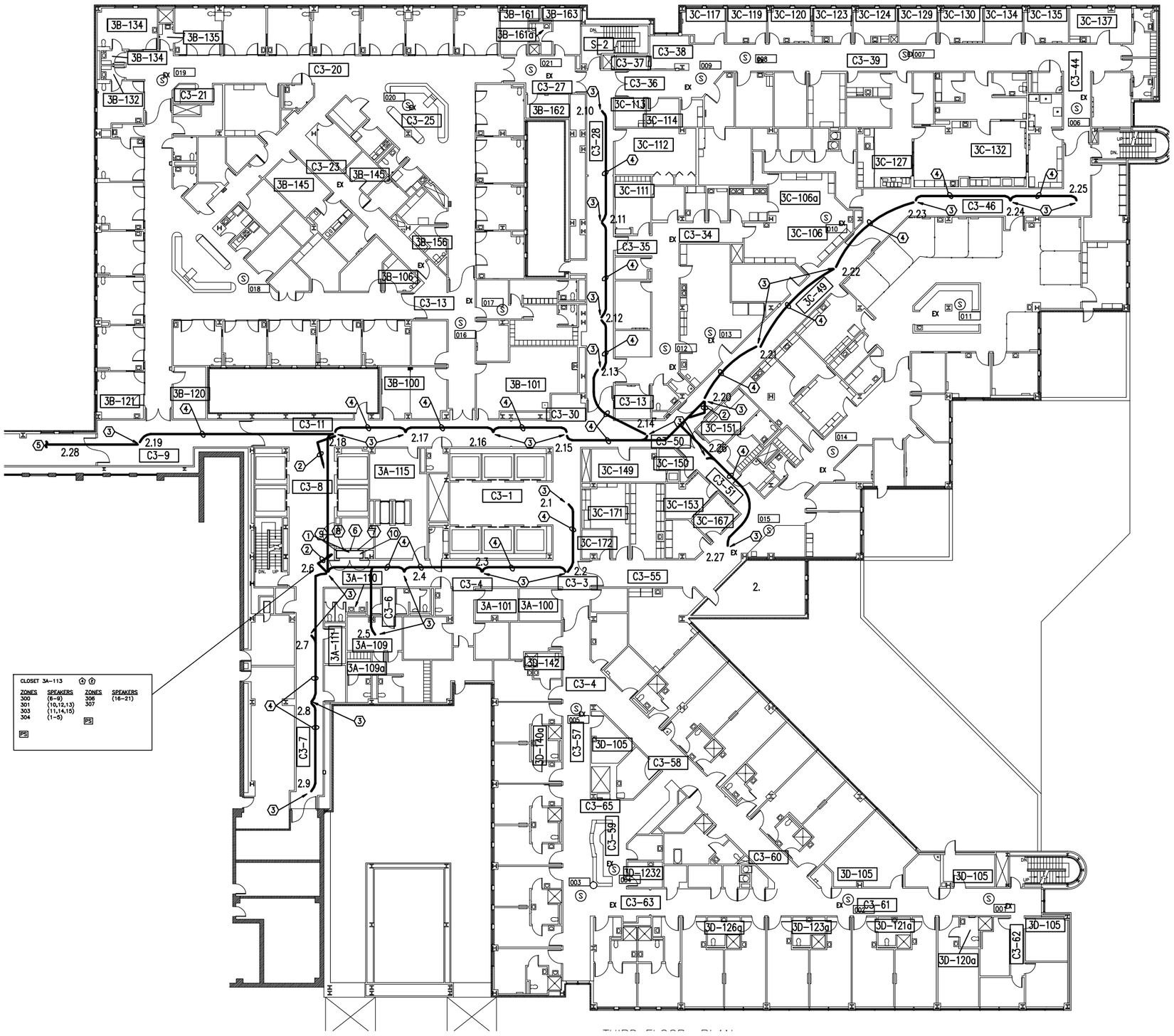

DRAWING NOTES

1. PROVIDE TWO NEW VALCOM #VI-2024 POWER SUPPLIES. CONNECT TO CLOSEST EXISTING 120 VOLT CIRCUIT.
2. RUN NEW SPEAKER CABLE TO NEW POWER SUPPLIES IN SIGNAL CLOSET 3A-113. PROVIDE NEW SPEAKER CABLING AS SHOWN IN ZONE 100 INTERFACE WIRING DIAGRAM ON DRAWING E41A, B, C & D.
3. REPLACE EXISTING CEILING SPEAKER WITH NEW VALCOM V-1020C LAY-IN TYPE SELF-AMPLIFIED SPEAKER. REMOVE ALL EXISTING WIRING BACK TO EXISTING AMPLIFIER. RUN NEW 4 PAIR CATEGORY 3 PLENUM CABLE EQUAL TO GENERAL CABLE #2131245 TO ZONE 100 LAN INTERFACE IN BOGEN ROOM BD-104 AND TERMINATE AS SHOWN ON ZONE 100 INTERFACE WIRING DIAGRAM ON DRAWING E41A, B, C & D.
4. NEW SPEAKER CABLE TO BE RUN CONCEALED ABOVE EXISTING CEILING.
5. REFER TO DRAWING 310-E16 FOR CONTINUATION.
6. (1) NEW 4-PORT LAN DEVICES. REFER TO DIAGRAM ON DRAWING E25.
7. (1) NEW 2-PORT DEVICE.
8. (2) NEW POWER SUPPLIES.
9. (2) CAT6 CABLES TO SIGNAL ROOM 2A-119.
10. SPEAKER CABLES SHOWN ON THIS DRAWING HAVE INTEGRAL AMPLIFIER AND VOLUME CONTROL FOR EACH SPEAKER. ALL SPEAKER AND VOLUME CONTROL CABLES TERMINATE ON KRONE PUNCH DOWN BLOCK IN SIGNAL ROOM.

SPECIAL NOTES

A. REFER TO PAGING ZONE SCHEDULE ON DRAWING E42 AND OVERALL PAGING SYSTEM RISER DIAGRAM ON DRAWING E43.

B. SPEAKERS MARKED "EX" REPLACED UNDER PHASE I.

ZONE 100
SPEAKER NUMBERS = 2.1 TO 2.28

THIRD FLOOR
SCALE: 1/32"=1-0"
BLDG.330

NORTH

SHEET #	PROJECT NO.	ISSUE DATE
330-E23	552-08-206	03/21/08

DEPARTMENT OF VETERANS AFFAIRS
OVERHEAD PAGING SYSTEM PHASE II
DAYTON MEDICAL CENTER

CONTECH DESIGN, INCORPORATED
Consulting Professional Engineers
519 Windsor Park Dr., Centerville, Ohio 45459
Phone: (937)435-3722, Fax (937) 435-4685
Email: engineer@contechdesign.com
Engineer Project # 07020

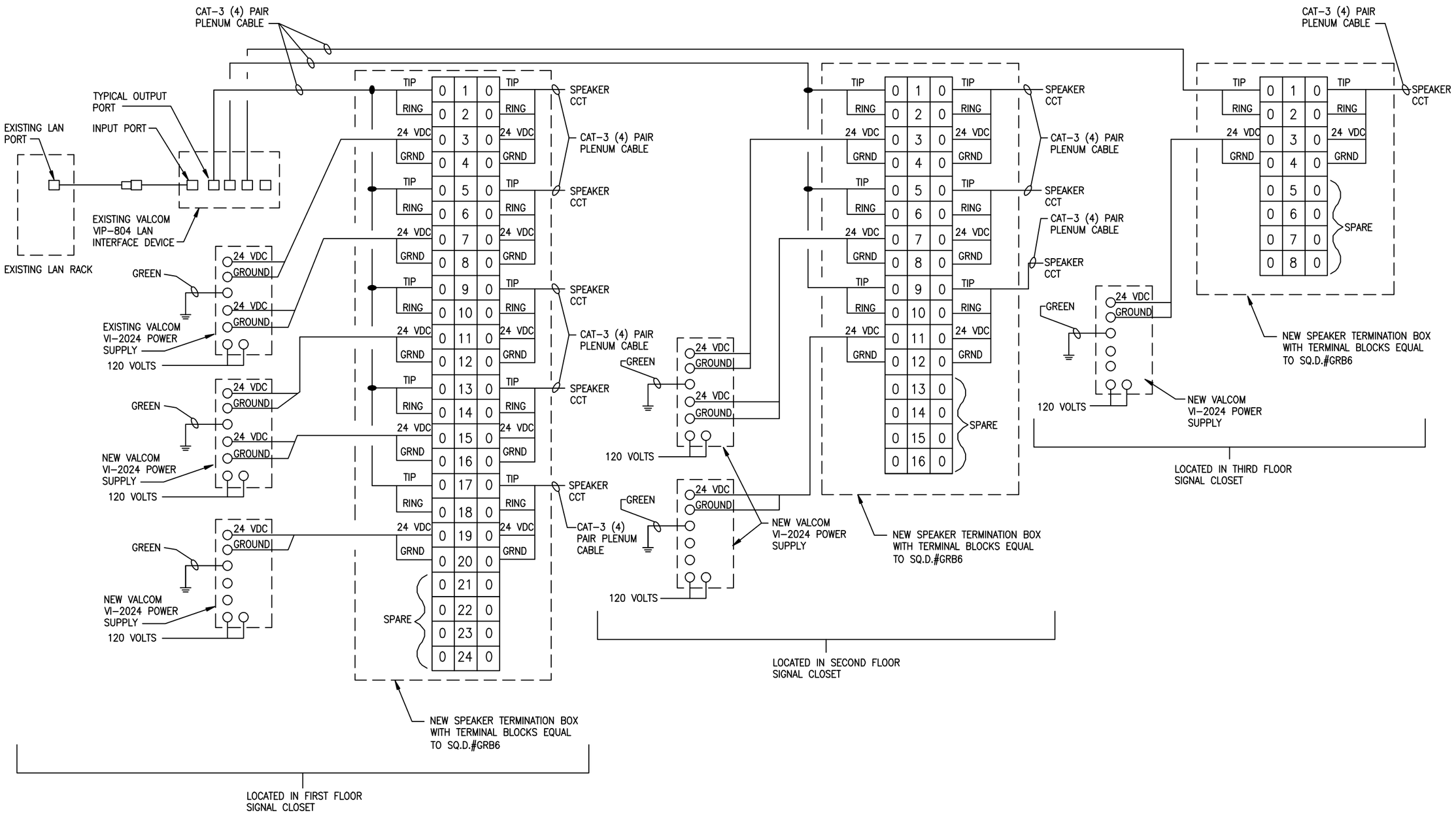

BUILDING 310 ZONE INTERFACE WITH SELF-AMPLIFIED SPEAKERS

NOT TO SCALE

SHEET # E39

PROJECT NO. 552-08-206

ISSUE DATE 03/21/08

DEPARTMENT OF VETERANS AFFAIRS
OVERHEAD PAGING SYSTEM PHASE II
DAYTON MEDICAL CENTER

CONTECH DESIGN, INCORPORATED
Consulting Professional Engineers
519 Windsor Park Dr., Centerville, Ohio 45459
Phone: (937) 435-3722 Fax: (937) 435-4685
Email: engineers@contechdesign.com
Engineer Project # 07020

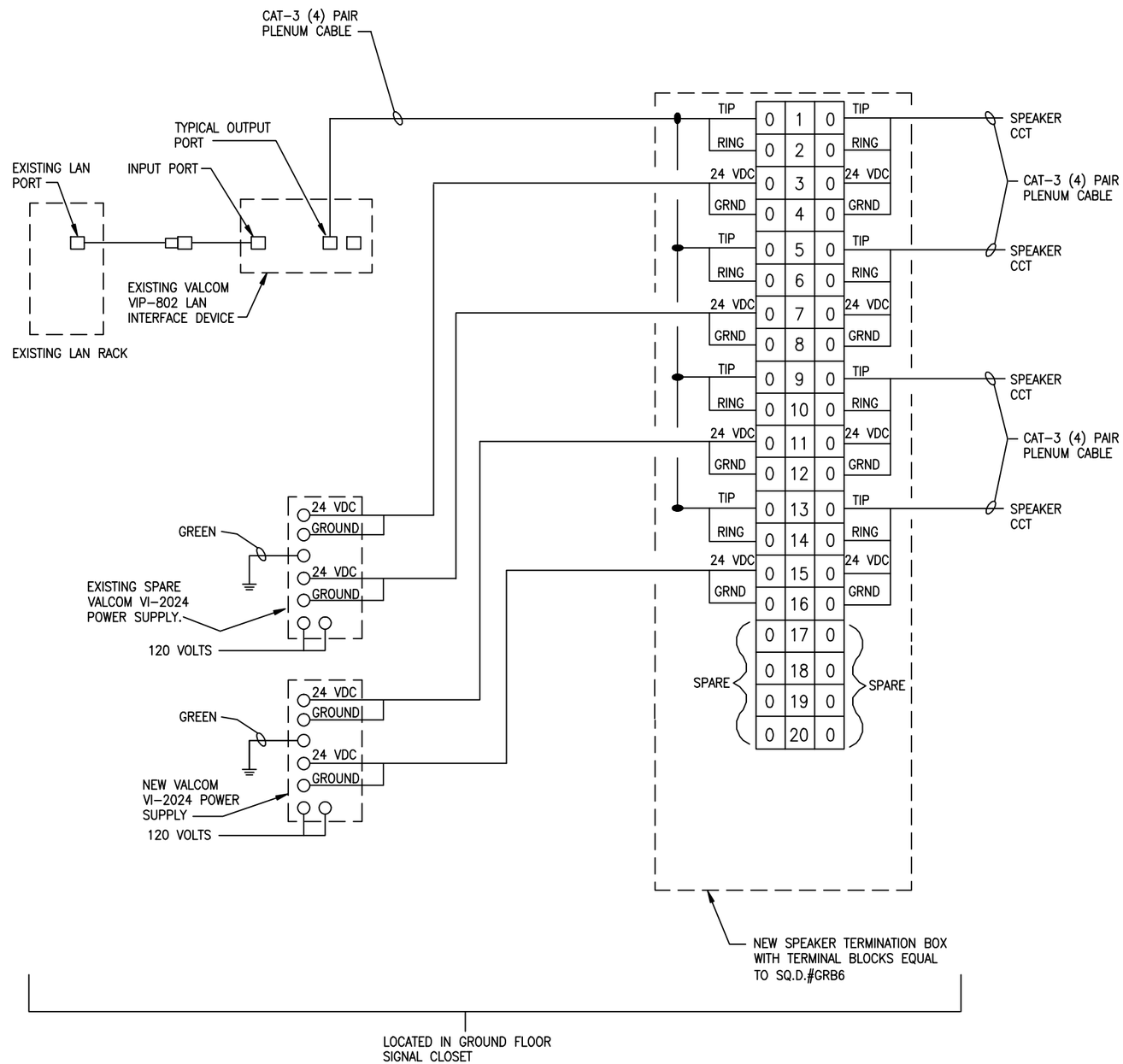

BUILDING 315 ZONE INTERFACE WITH SELF-AMPLIFIED SPEAKERS

NOT TO SCALE

SHEET #	PROJECT NO.	ISSUE DATE
E40	552-08-206	03/21/08

DEPARTMENT OF VETERANS AFFAIRS
OVERHEAD PAGING SYSTEM PHASE II
DAYTON MEDICAL CENTER

CONTECH DESIGN, INCORPORATED
Consulting Professional Engineers
519 Windsor Park Dr., Centerville, Ohio 45459
Phone: (937) 435-3722 Fax: (937) 435-4685
Email: engineers@contechdesign.com
Engineer Project # 07020

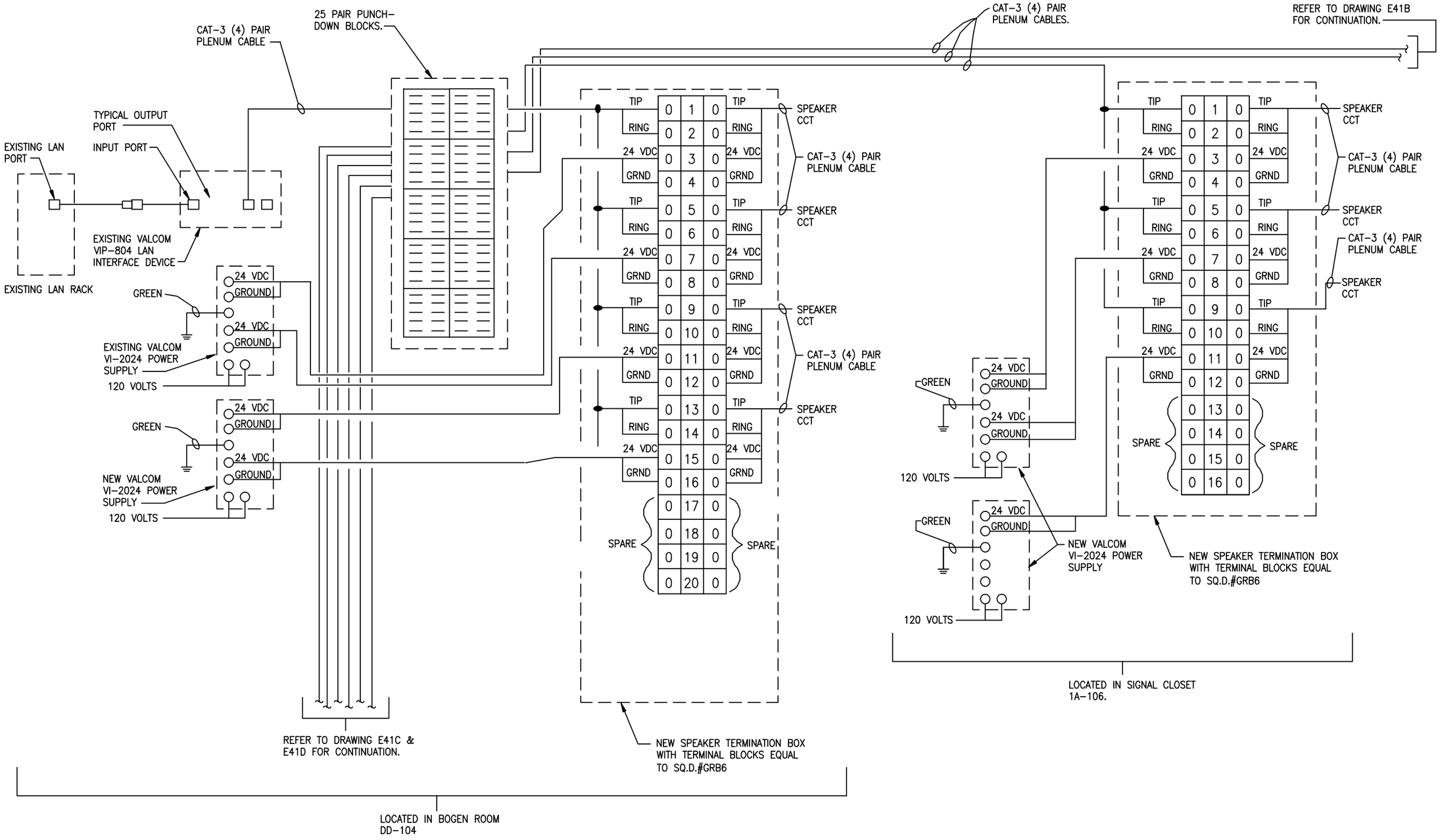

BUILDING 330 ZONE 100 INTERFACE WIRING DIAGRAM - PART A

NOT TO SCALE

SHEET #	PROJECT NO.	ISSUE DATE
E41A	552-08-206	03/21/08

DEPARTMENT OF VETERANS AFFAIRS
OVERHEAD PAGING SYSTEM PHASE II
DAYTON MEDICAL CENTER

CONTECH DESIGN INCORPORATED
Consulting Professional Engineers
519 Windsor Park Dr., Centerville, Ohio 45459
Phone: (937)435-3722 Fax: (937) 435-4685
Email: engineers@contechdesign.com
Engineer Project # 07020

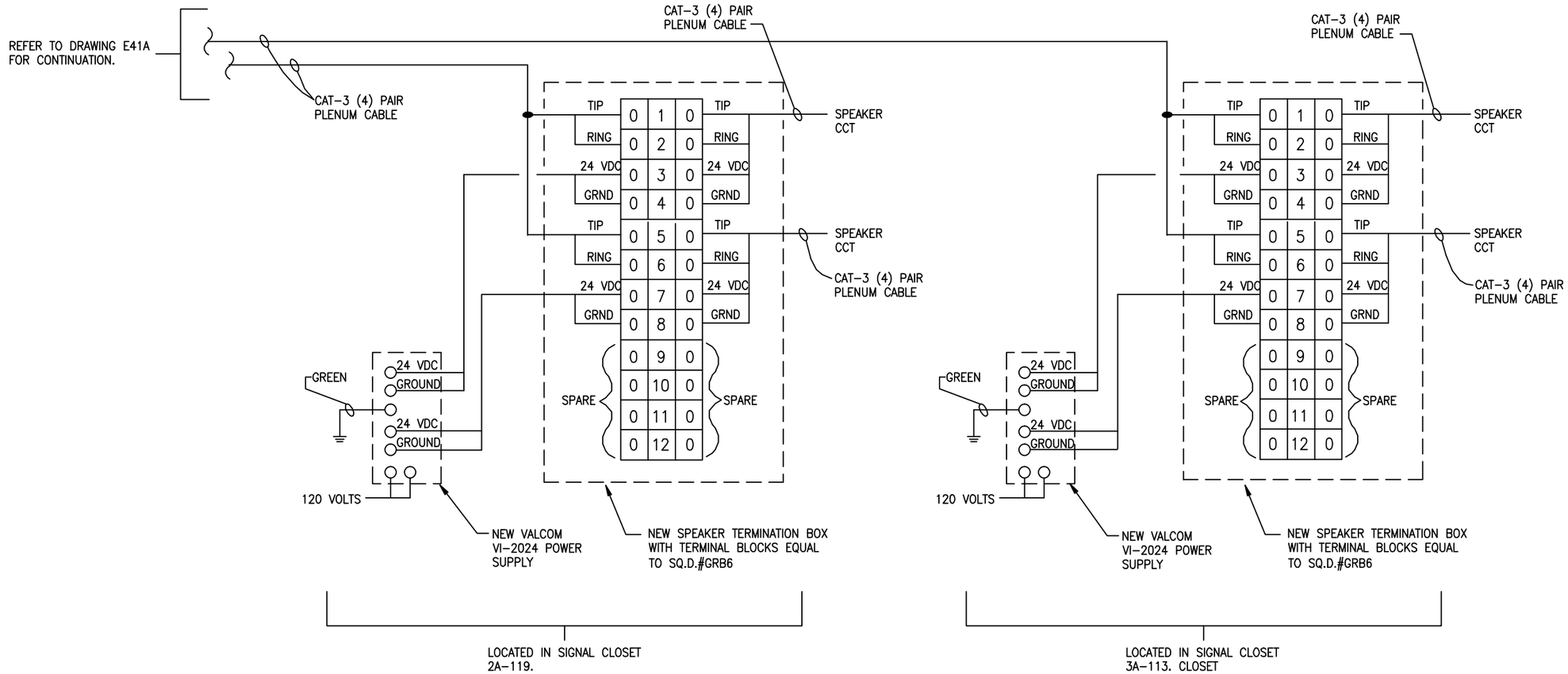

BUILDING 330 ZONE 100 INTERFACE WIRING DIAGRAM - PART B

NOT TO SCALE

SHEET #	PROJECT NO.	ISSUE DATE
E41B	552-08-206	03/21/08

DEPARTMENT OF VETERANS AFFAIRS
OVERHEAD PAGING SYSTEM PHASE II
DAYTON MEDICAL CENTER

CONTECH DESIGN, INCORPORATED
Consulting Professional Engineers
519 Windsor Park Dr., Centerville, Ohio 45459
Phone: (937) 435-3722 Fax: (937) 435-4685
Email: engineers@contechdesign.com
Engineer Project # 07020

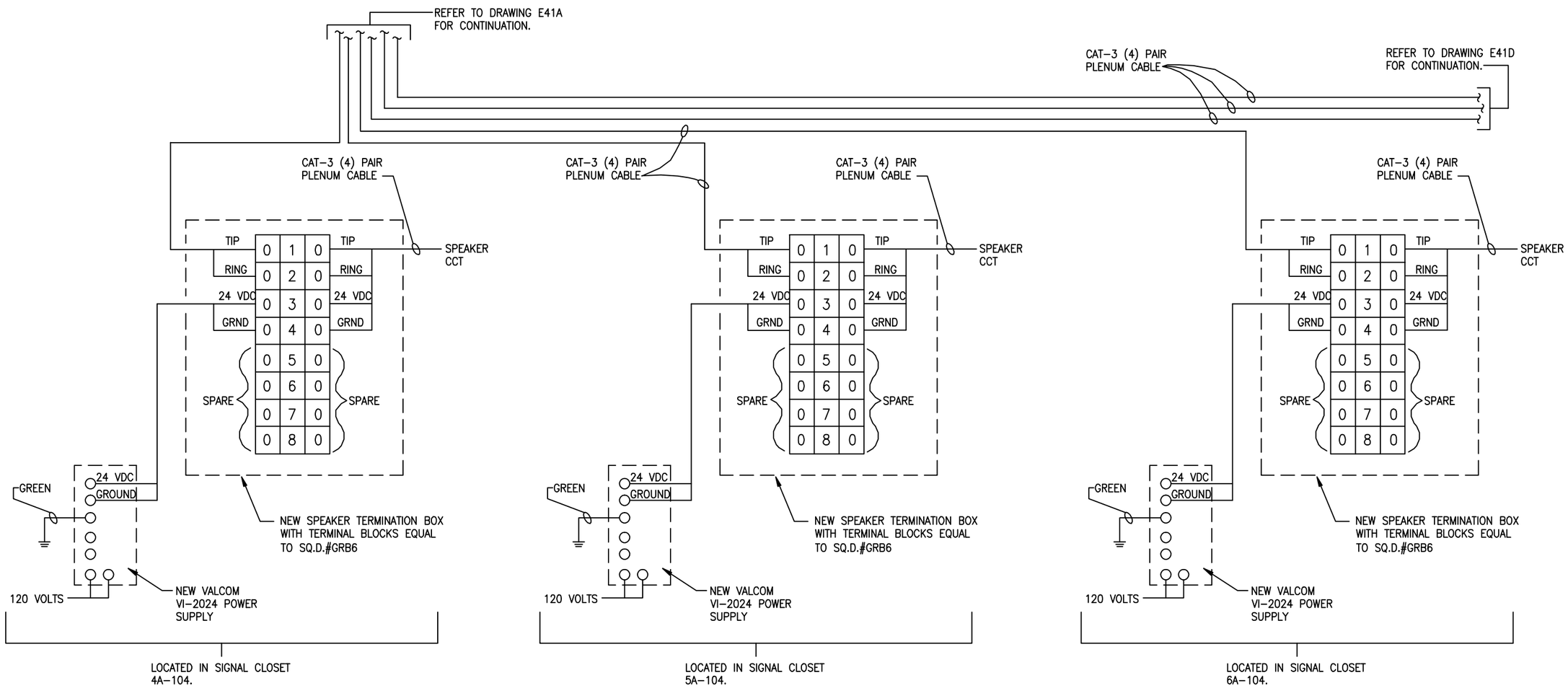

BUILDING 330 ZONE 100 INTERFACE WIRING DIAGRAM - PART C

NOT TO SCALE

SHEET # E41C

PROJECT NO. 552-08-206

ISSUE DATE 03/21/08

DEPARTMENT OF VETERANS AFFAIRS
OVERHEAD PAGING SYSTEM PHASE II
DAYTON MEDICAL CENTER

CONTECH DESIGN, INCORPORATED
Consulting Professional Engineers
519 Windsor Park Dr., Centerville, Ohio 45459
Phone: (937)435-3722 Fax: (937) 435-4685
Email: engineers@contechdesign.com
Engineer Project # 07020

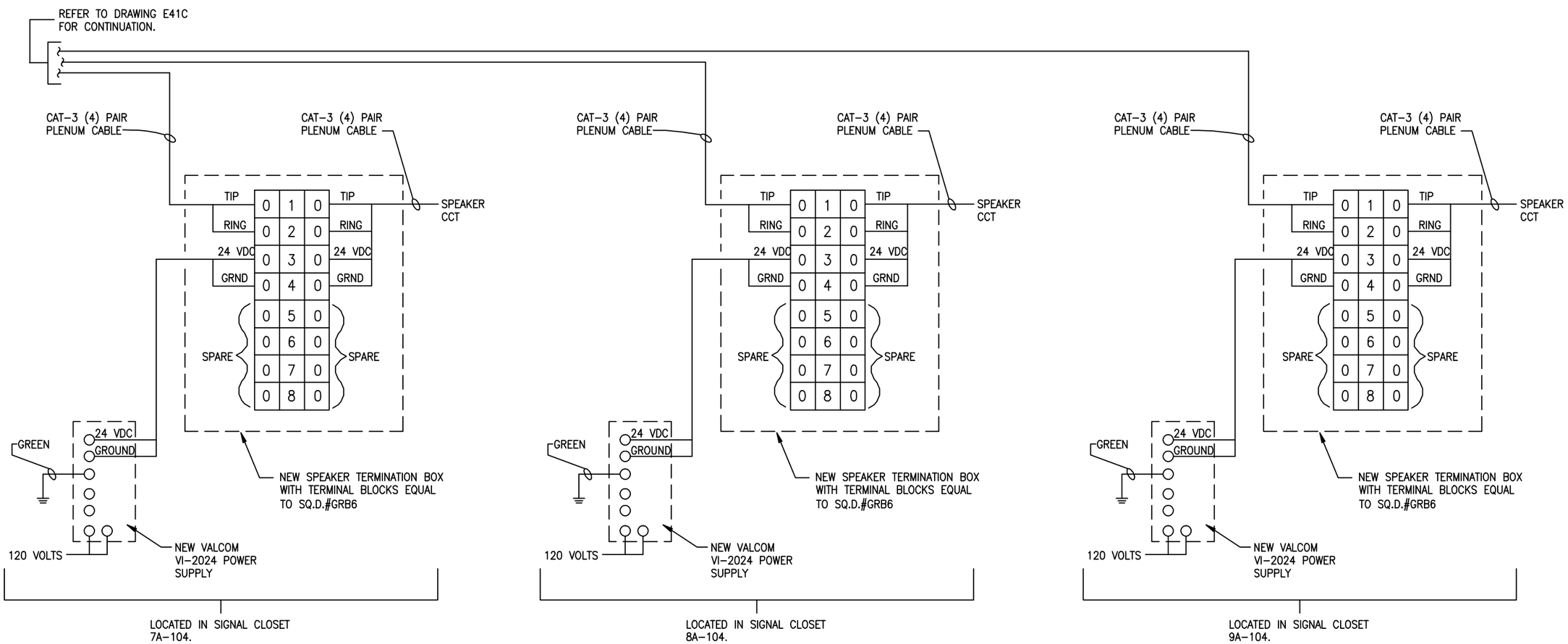

BUILDING 330 ZONE 100 INTERFACE WIRING DIAGRAM - PART D

NOT TO SCALE

SHEET # E41D

PROJECT NO. 552-08-206

ISSUE DATE 03/21/08

DEPARTMENT OF VETERANS AFFAIRS
OVERHEAD PAGING SYSTEM PHASE II
DAYTON MEDICAL CENTER

CONTECH DESIGN, INCORPORATED
Consulting Professional Engineers
519 Windsor Park Dr., Centerville, Ohio 45459
Phone: (937) 435-3722 Fax: (937) 435-4685
Email: engineers@contechdesign.com
Engineer Project # 07020

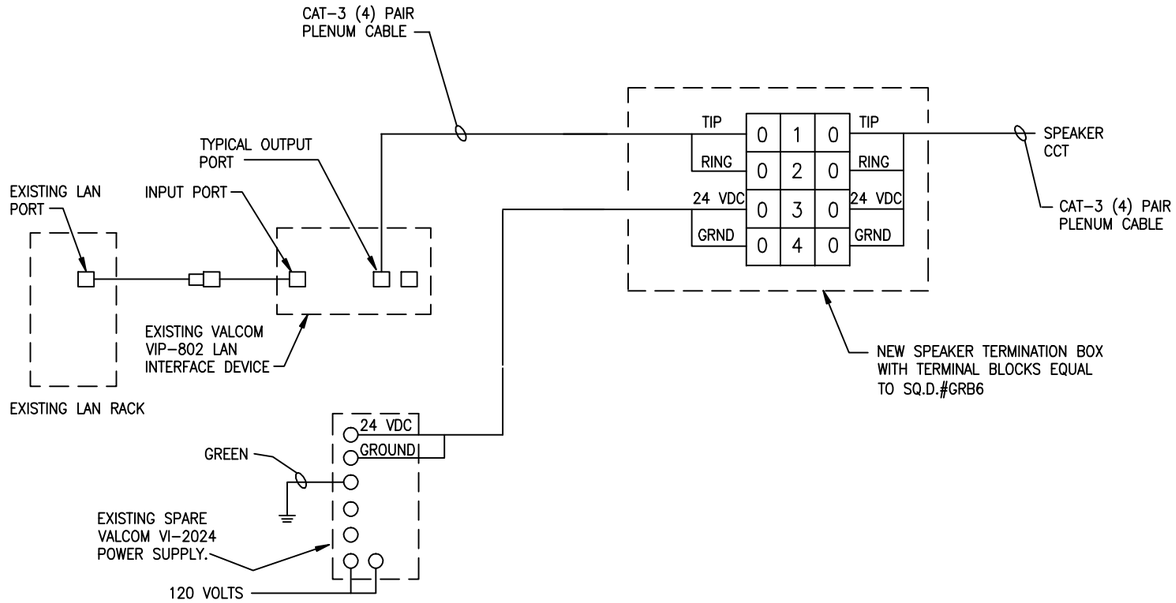

ZONE INTERFACE WIRING DIAGRAM WITH SELF-AMPLIFIED SPEAKERS

NOT TO SCALE

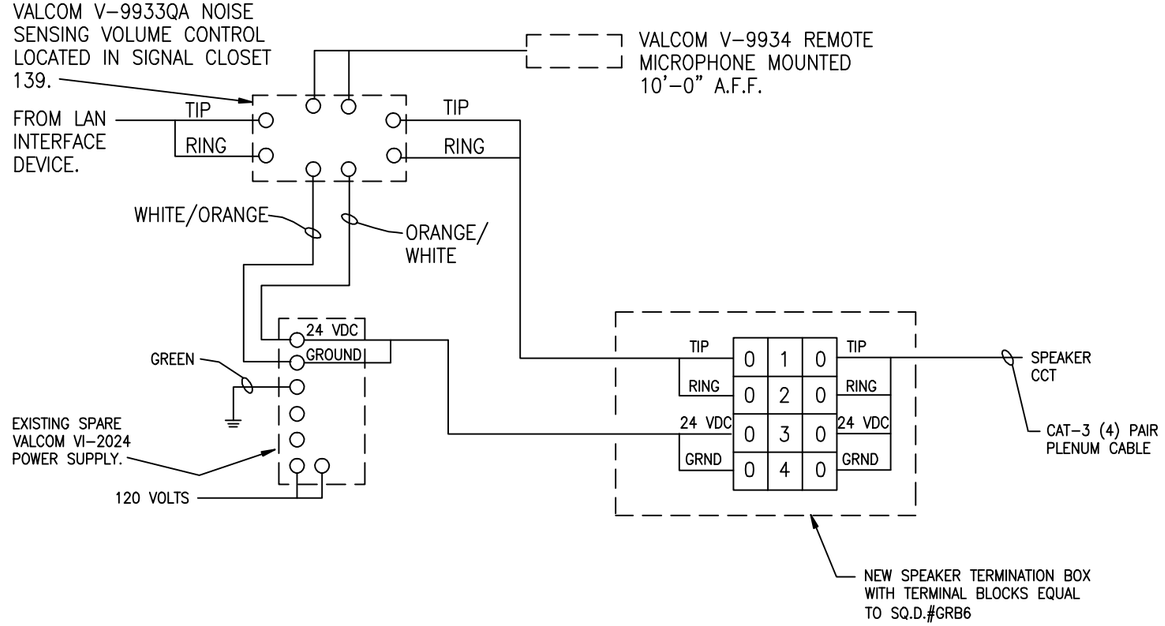

BUILDING 340 LOBBY PAGING DIAGRAM

NOT TO SCALE

PAGING ZONE SCHEDULE

BLDG./FLOOR	INDIVIDUAL ZONES	BLDG. GROUP ZONES	GROUP ZONES	COMMENTS
115	909, 910	115	450, 777, 888	
126	912, 913	126	450, 777, 888	
127	914, 915	127	450, 777, 888	
128	916, 917	128	450, 777, 888	
147	918, 919	147	450, 777, 888	
302	920, 921, 974, 975	302, 326, 327, 328	451, 453, 455, 888	
305	922, 923	305, 317	452, 453, 456, 888	
307	970, 971, 976, 977	308, 309	460, 777, 888, 999, 911	NEW ZONE 307
310	924, 925	310, 311, 312, 313	456, 460, 777, 888, 911, 999	
315	926, 927	315, 316	460, 777, 888, 911, 999	
320	928, 929	320, 325	453, 777, 888, 999	
321	666-669, 930, 931	321	777, 999	
330 BSMT.	670-673, 986, 987	100, 101	330, 331, 453, 454, 464, 888, 911, 999	
330 BSMT.	934, 935, 978, 979	102, 103, 112, 113	330, 331, 453, 454,	
330 FIRST	936-943	104-111	464, 888, 911, 999	
330 SECOND	944-951	200-207	330, 331, 453, 454,	
330 THIRD	952-957	300, 301, 303 304, 306	464, 888, 911, 999	
330 FOURTH	958, 959	400, 401	330, 332, 453, 460, 777, 888, 911, 999	
330 FIFTH	960, 961	500, 501	330, 332, 453, 460, 777, 888, 911, 999	
330 SIXTH	962, 963	600, 601	330, 332, 453, 460, 777, 888, 911, 999	
330 SEVENTH	964, 965	700, 701	330, 332, 453, 460, 777, 888, 911, 999	
330 EIGHTH	966, 967	800, 801	330, 332, 453, 460, 777, 888, 911, 999	
330 NINTH	968, 969	900, 901	330, 332, 453, 460, 777, 888, 911, 999	
340	980, 981	340, 341	455, 460, 777, 888, 911, 999	
408	932, 933	408, 409	450, 777, 888	NEW ZONE 408
410	972, 973, *982, *983	410, 412, 413, 414	453, 455, 888	
411	984, 985	411	452, 453, 455, 777	

NOTES:

VERIFY PORT ASSIGNMENTS AND ADDRESSES WITH OWNERS REPRESENTATIVE.

* DENOTES NEW INDIVIDUAL ZONE.

SHEET # E42

PROJECT NO. 552-08-206

ISSUE DATE 03/21/08

DEPARTMENT OF VETERANS AFFAIRS
OVERHEAD PAGING SYSTEM PHASE II
DAYTON MEDICAL CENTER

CONTECH DESIGN, INCORPORATED
Consulting Professional Engineers
519 Windsor Park Dr., Centerville, Ohio 45459
Phone: (937) 435-3722 Fax: (937) 435-4685
Email: engineers@contechdesign.com
Engineer Project # 07020

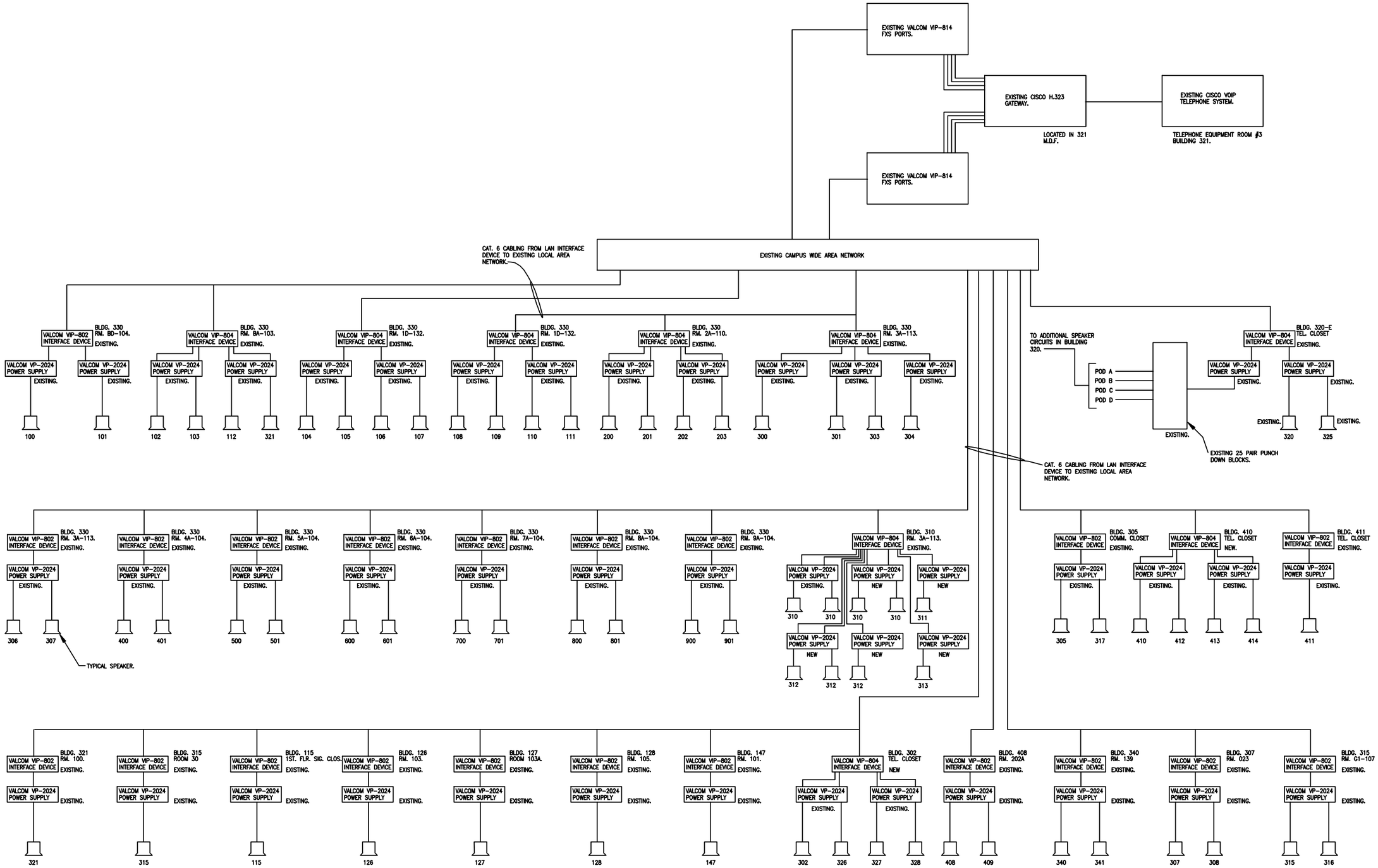

OVERALL PAGING SYSTEM RISER DIAGRAM

NOT TO SCALE

SHEET #	PROJECT NO.	ISSUE DATE
E43	552-08-206	03/21/08

DEPARTMENT OF VETERANS AFFAIRS
OVERHEAD PAGING SYSTEM PHASE II
DAYTON MEDICAL CENTER

CONTECH DESIGN, INCORPORATED
Consulting Professional Engineers
519 Windsor Park Dr., Centerville, Ohio 45459
Phone: (937) 435-3722 Fax: (937) 435-4685
Email: engineers@contechdesign.com
Engineer Project # 07020

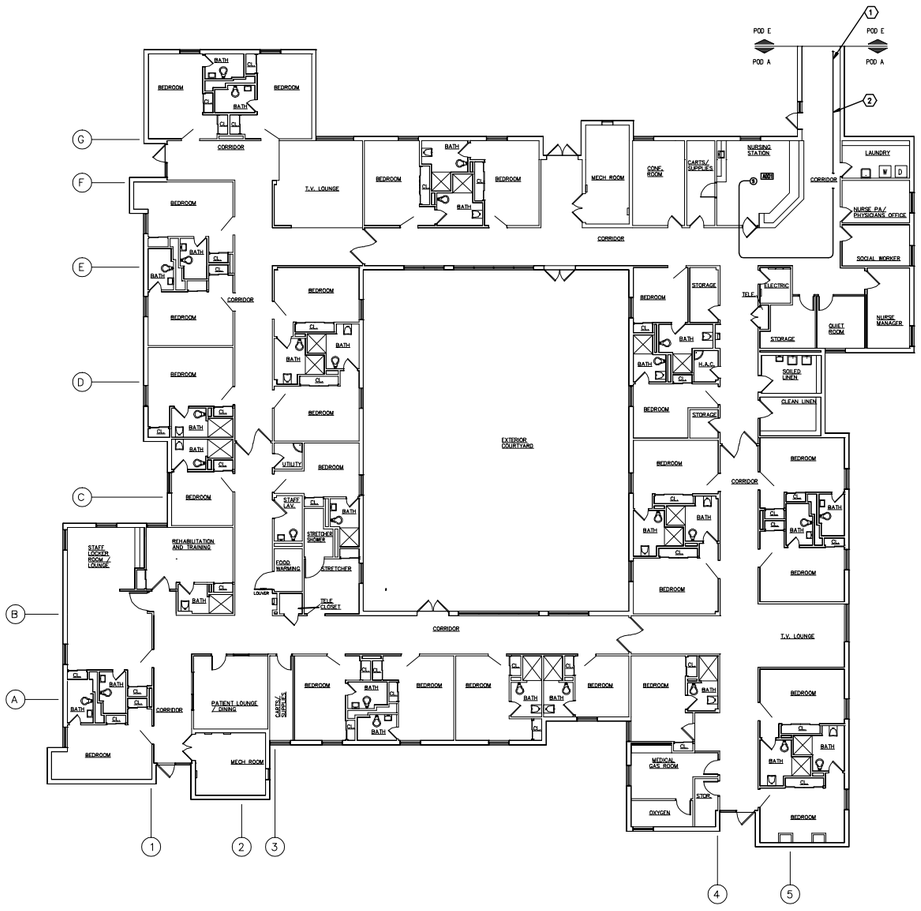

DRAWING NOTES

1. NEW SPEAKER CABLE FROM NEW LAN SYSTEM INTERFACE DEVICE LOCATED IN POD E BASEMENT TELEPHONE ROOM. REFER TO PLAN ON DRAWING PG-25.
2. NEW SPEAKERS SHOWN ON THIS DRAWING HAVE INTEGRAL AMPLIFIER AND VOLUME CONTROL FOR EACH SPEAKER.

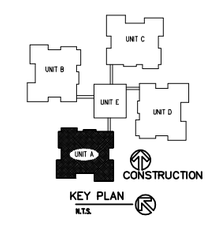

SHEET #	PROJECT NO.	ISSUE DATE
320-A	552-08-206	03/21/08

DEPARTMENT OF VETERANS AFFAIRS

OVERHEAD PAGING SYSTEM PHASE II

DAYTON MEDICAL CENTER

CONTECH DESIGN, INCORPORATED
Consulting Professional Engineers
519 Windsor Park Dr., Centerville, Ohio 45459
Phone: (937) 435-3722 Fax: (937) 435-4685
Email: engineers@contechdesign.com
Engineer Project # 07020

DRAWING NOTES

1. NEW SPEAKER CABLE FROM NEW LAN SYSTEM INTERFACE DEVICE LOCATED IN POD E BASEMENT TELEPHONE ROOM. REFER TO PLAN ON DRAWING PG-25.

2. NEW SPEAKERS SHOWN ON THIS DRAWING HAVE INTEGRAL AMPLIFIER AND VOLUME CONTROL FOR EACH SPEAKER.

KEY PLAN
N.T.S.

SHEET #	PROJECT NO.	ISSUE DATE
320-B	552-08-206	03/21/08

DEPARTMENT OF VETERANS AFFAIRS

OVERHEAD PAGING SYSTEM PHASE II

DAYTON MEDICAL CENTER

CONTECH DESIGN, INCORPORATED
Consulting Professional Engineers
519 Windsor Park Dr., Centerville, Ohio 45459
Phone: (937) 435-3722 Fax: (937) 435-4685
Email: engineers@contechdesign.com

Engineer Project # 07120

DRAWING NOTES

1. NEW SPEAKER CABLE FROM NEW LAN SYSTEM INTERFACE DEVICE LOCATED IN POD E BASEMENT TELEPHONE ROOM. REFER TO PLAN ON DRAWING FC-25.

2. NEW SPEAKERS SHOWN ON THIS DRAWING HAVE INTEGRAL AMPLIFIER AND VOLUME CONTROL FOR EACH SPEAKER.

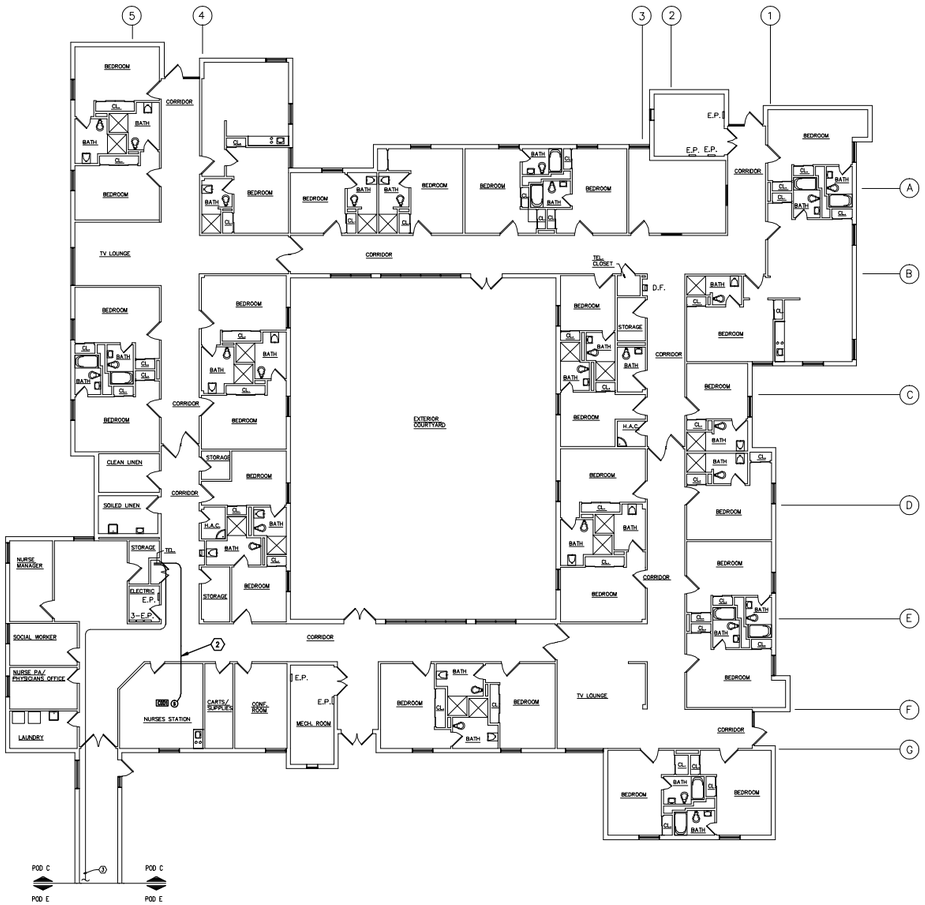

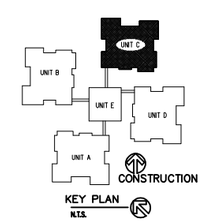

SHEET #	PROJECT NO.	ISSUE DATE
320-C	552-08-206	03/21/08

DEPARTMENT OF VETERANS AFFAIRS

OVERHEAD PAGING SYSTEM PHASE II

DAYTON MEDICAL CENTER

CONTECH DESIGN, INCORPORATED
Consulting Professional Engineers
519 Windsor Park Dr., Centerville, Ohio 45459
Phone: (937) 435-3722 Fax: (937) 435-4685
Email: engineers@contechdesign.com
Engineer Project # 07020

DRAWING NOTES

1. NEW SPEAKER CABLE FROM NEW LAN SYSTEM INTERFACE DEVICE LOCATED IN POD E BASEMENT TELEPHONE ROOM. REFER TO PLAN ON DRAWING PG-25.
2. NEW SPEAKERS SHOWN ON THIS DRAWING HAVE INTEGRAL AMPLIFIER AND VOLUME CONTROL FOR EACH SPEAKER.

KEY PLAN
N.T.S.

SHEET #	PROJECT NO.	ISSUE DATE
320-D	552-08-206	03/21/08

DEPARTMENT OF VETERANS AFFAIRS

OVERHEAD PAGING SYSTEM PHASE II
DAYTON MEDICAL CENTER

CONTECH DESIGN, INCORPORATED
Consulting Professional Engineers
519 Windsor Park Dr., Centerville, Ohio 45459
Phone: (937) 435-3722 Fax: (937) 435-4685
Email: engineers@contechdesign.com
Engineer Project # 07020

DRAWING NOTES

1. NEW SPEAKER CABLE FROM NEW LAN SYSTEM INTERFACE DEVICE LOCATED IN POD E BASEMENT TELEPHONE ROOM. REFER TO PLAN ON DRAWING PG-25.

2. NEW SPEAKERS SHOWN ON THIS DRAWING HAVE INTEGRAL AMPLIFIER AND VOLUME CONTROL FOR EACH SPEAKER.

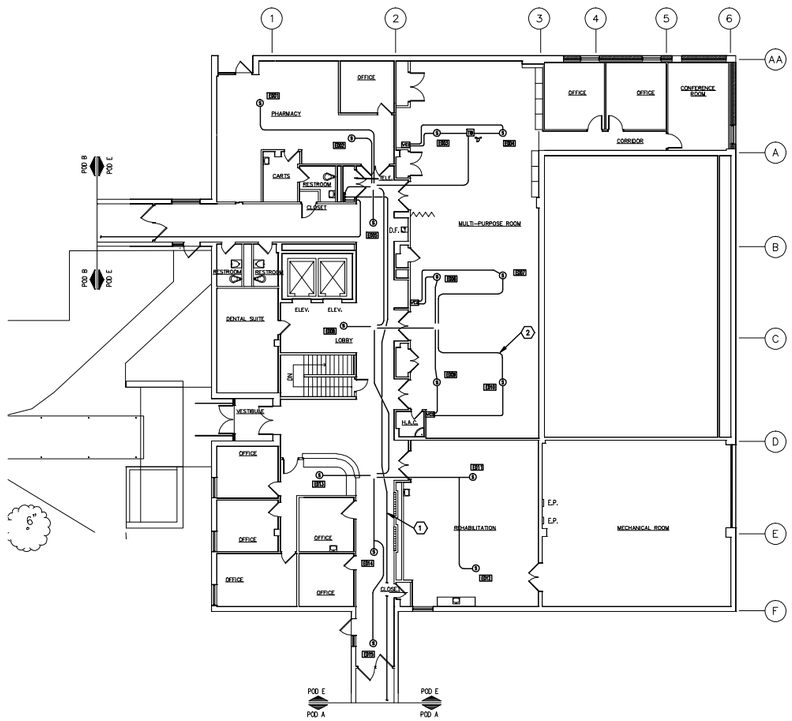

VOLUME CONTROL	CONTROLS THRU SPEAKERS
VC1	SPKRS E3 & E4
VC2	SPKRS E6 & E7
VC3	SPKRS E9 & E10

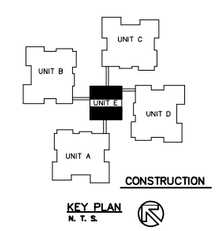

KEY PLAN
N. T. S.

SHEET #	PROJECT NO.	ISSUE DATE
320-UNIT E	552-08-206	03/21/08

DEPARTMENT OF VETERANS AFFAIRS

OVERHEAD PAGING SYSTEM PHASE II

DAYTON MEDICAL CENTER

CONTECH DESIGN, INCORPORATED
Consulting Professional Engineers
519 Windsor Park Dr., Centerville, Ohio 45459
Phone: (937)435-3722 Fax: (937) 435-4685
Email: engineer@contechdesign.com
Engineer Project # 07020

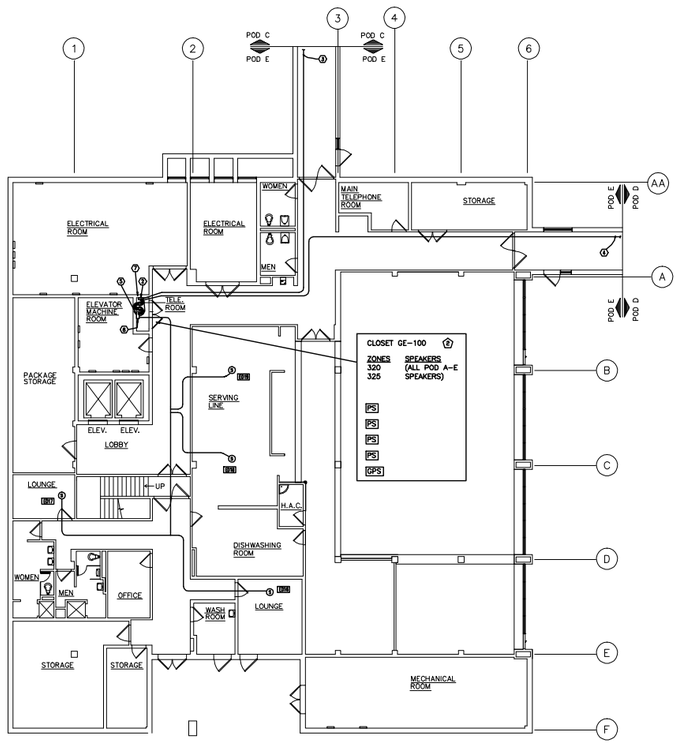

DRAWING NOTES

1. NEW CIRCUIT FROM EXISTING EMERGENCY PANEL IN CLOSEST ELECTRIC ROOM. PROVIDE A 20 AMP. 1 POLE BREAKER. RUN 2 #12 THHN, COPPER & 1 #12 GROUND IN ¾" CONDUIT.
2. NEW 2-PORT LAN SYSTEM INTERFACE DEVICES – REFER TO SYSTEM DIAGRAM ON DRAWING PG-25. CONNECT UNIT 24VDC ADAPTERS TO SAME CIRCUIT USED FOR NEW AMPLIFIER. NEW CAT. 6 LAN CABLES TO EXISTING LAN SYSTEM RACK REFER TO DRAWING ON PG-25.
3. SPEAKER CABLE FROM POD C
4. SPEAKER CABLE FROM POD D
5. SPEAKER CABLES FROM PODS A, B & 1ST FLOOR POD E
6. VOLUME CONTROL CABLES FROM 1ST FLOOR POD E.
7. SPEAKER CABLES SHOWN ON THIS DRAWING HAVE INTEGRAL AMPLIFIER AND VOLUME CONTROL FOR EACH SPEAKER. ALL SPEAKER AND VOLUME CONTROL CABLES TERMINATE ON KRONE PUNCH BLOCK IN SIGNAL ROOM.

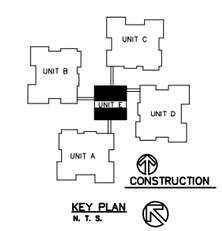

KEY PLAN
N. T. S.

SHEET #	PROJECT NO.	ISSUE DATE
320-UNIT E	552-08-206	03/21/08

DEPARTMENT OF VETERANS AFFAIRS
OVERHEAD PAGING SYSTEM PHASE II
DAYTON MEDICAL CENTER

CONTECH DESIGN, INCORPORATED
Consulting Professional Engineers
519 Windsor Park Dr., Centerville, Ohio 45459
Phone: (937)435-3722 Fax: (937) 435-4685
Email: engineer@contechdesign.com
Engineer Project # 07020

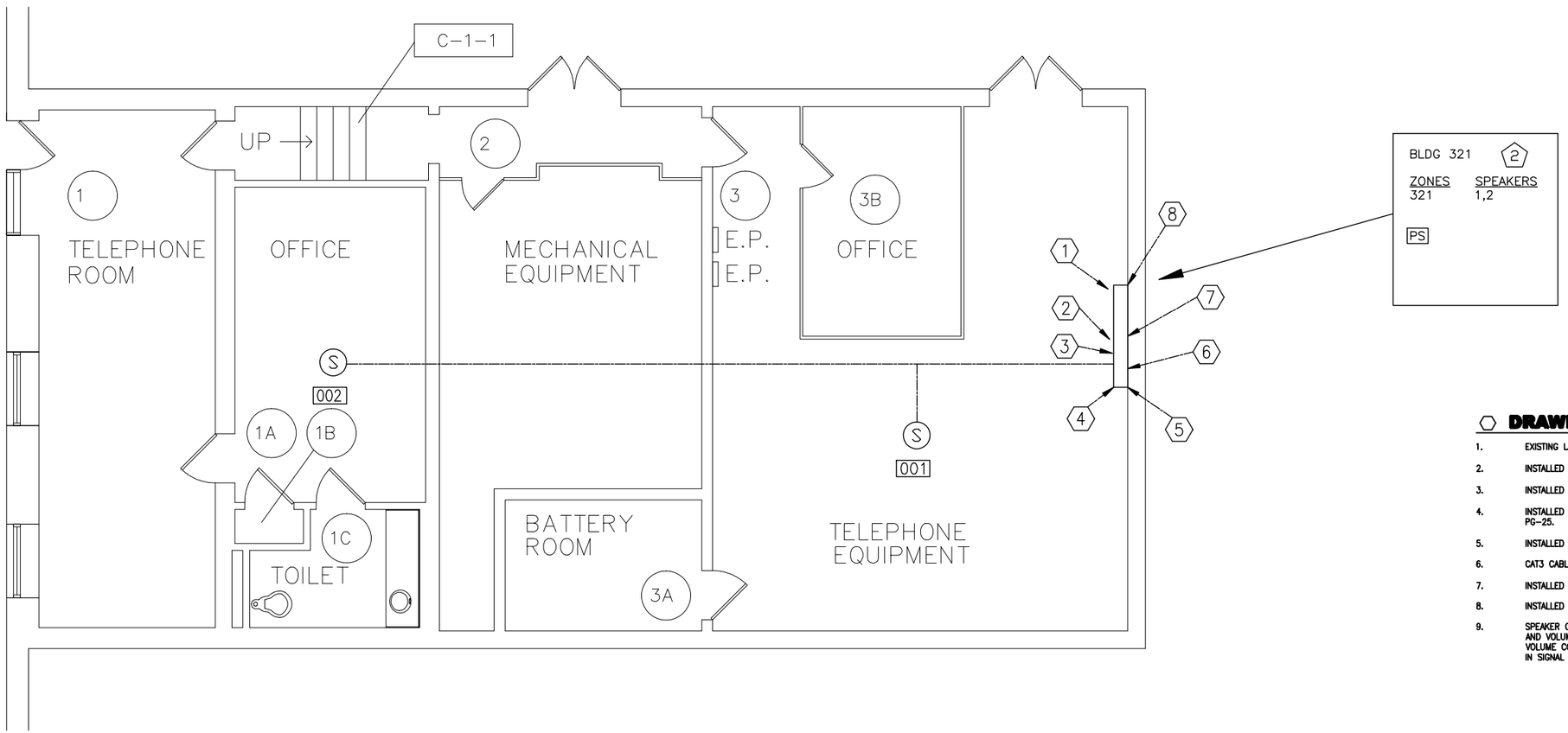

DRAWING NOTES

1. EXISTING LAN RACK.
2. INSTALLED POWER SUPPLY (V-2024).
3. INSTALLED 2-HEAD IND. CONTROL UNITS (VALCOM VIP-814).
4. INSTALLED (1) 2-PORT INTERFACE (VIP-802). REFER TO DIAGRAM ON PG-25.
5. INSTALLED (1) KRONE PUCH DOWN BLOCK FOR SPEAKER TERMINATIONS.
6. CAT3 CABLES FROM KRONE BLOCK TO SPEAKERS 001 & 002.
7. INSTALLED CISCO 2811 EQUIPMENT (RACK-MOUNTABLE).
8. INSTALLED UPS FOR PAGING INTERFACE EQUIP.
9. SPEAKER CABLES SHOWN ON THIS DRAWING HAVE INTEGRAL AMPLIFIER AND VOLUME CONTROL FOR EACH SPEAKER. ALL SPEAKER AND VOLUME CONTROL CABLES TERMINATE ON KRONE PUNCH DOWN BLOCK IN SIGNAL ROOM.

SHEET #	PROJECT NO.	ISSUE DATE
321	552-08-206	03/21/08

DEPARTMENT OF VETERANS AFFAIRS
OVERHEAD PAGING SYSTEM PHASE II
DAYTON MEDICAL CENTER

CONTECH DESIGN, INCORPORATED
Consulting Professional Engineers
519 Windsor Park Dr., Centerville, Ohio 45459
Phone: (937) 435-3722 Fax: (937) 435-4685
Email: engineers@contechdesign.com
Engineer Project # 07020