LEGEND

- NATIONAL HISTORIC SITE BOUNDARY
- STATE LINE
- COUNTY LINE
- PAVED ROAD
- TRAIL
- CREEK OR RIVER
- V.C. VISITOR CENTER
- HQ. PARK HEADQUARTERS
- RANGER STATION
- INFORMATION CENTER
- PARKING

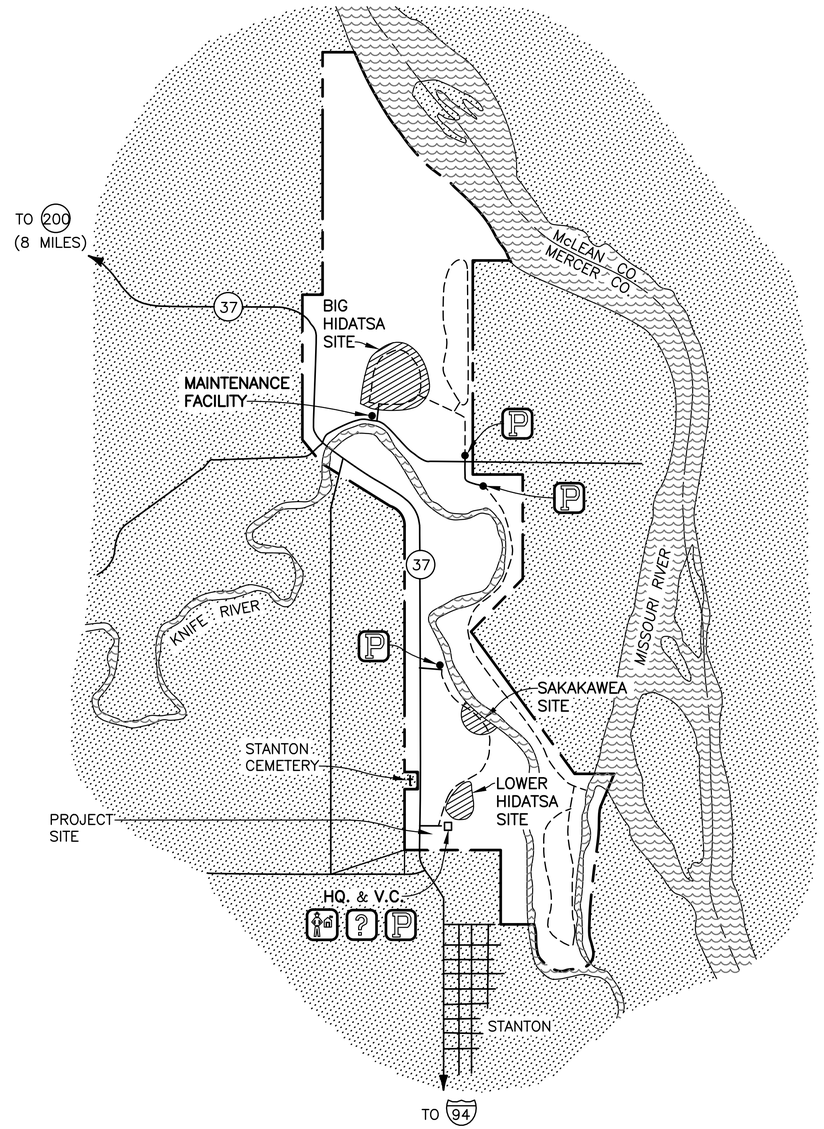

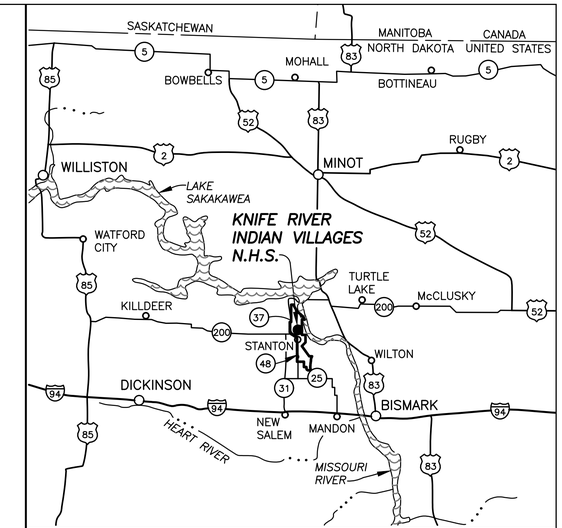

VISITOR CENTER BUILDING AND SEPTIC
NORTH DAKOTA

30 0 30
SCALE OF MILES

INDEX

SHEET	SUB SHEET	TITLE OF SHEET
		GENERAL
1		COVER SHEET & INDEX OF DRAWINGS
2	G1	LEGENDS
3	G2	ABBREVIATIONS
		CIVIL
4	C1	TOPOGRAPHIC SURVEY
5	C2	SITE DEMOLITION
6	C3	EROSION CONTROL LAYOUT
7	C4	SITE LAYOUT
8	C5	SANITARY SEWER PLAN AND PROFILE
9	C6	CIVIL DETAILS
10	C7	CIVIL DETAILS
11	C8	CIVIL DETAILS
12	C9	CIVIL DETAILS
13	C10	CIVIL DETAILS
14	C11	CIVIL DETAILS
		PLUMBING
15	P0	PLUMBING SYMBOLS AND ABBREVIATIONS
16	P1	FIRST FLOOR WASTE AND VENT DEMO PLAN
17	P2	FIRST FLOOR WASTE AND VENT NEW PLAN
18	P3	PLUMBING DIAGRAMS
		ELECTRICAL
19	E1	ELECTRICAL SYMBOLS
20	E2	ELECTRICAL SITE LAYOUT
21	E3	ELECTRICAL DETAILS
22	E4	ELECTRICAL ONE LINE DIAGRAMS AND SCHEDULE

KNIFE RIVER INDIAN VILLAGES NATIONAL HISTORIC SITE

SCALE OF FEET
2,000 0 2,000 4,000
500 0 500 1,000
SCALE OF METERS

REGISTERED PROFESSIONAL ENGINEER
CHRISTOPHER M. BAILEY
PE-28356
DATE 4-17-26
NORTH DAKOTA

NATIONAL PARK SERVICE
Department of the Interior

CONSTRUCTION DRAWINGS

UNITED STATES
DEPARTMENT OF THE INTERIOR

NATIONAL PARK SERVICE
MIDWEST REGION

TITLE OF PROJECT
REPLACEMENT OF VISITOR CENTER SANITARY SEWER PLUMBING AND SEPTIC SYSTEM
LOCATION WITHIN PARK
VISITOR CENTER
NAME OF PARK
KNIFE RIVER INDIAN VILLAGES N.H.S.

REGION	COUNTY	STATE
MIDWEST	MERCER	NORTH DAKOTA

DRAWING NO. 80051
168

PKG. NO.

SHEET 1 OF 22

BASIC DATA: BOUNDARY MAP 468/80,020A 4/92; 468/40,000A; PARK MINI FOLDER 1993; REVISED & REDRAWN 4/94. UPDATED 11/98. SGS.

4/17/2026 8:37 AM ASTRAHL R24 C:\pwworking\central02\d0168596\G0 Cover.dwg

SITE PLAN SYMBOLOGY

LEGEND

- SANITARY MANHOLE
- WATER MANHOLE
- WATER VALVE
- FIRE HYDRANT
- POWER POLE
- ELECTRIC JUNCTION BOX/OUTLET
- POWER METER
- GAS TANK ACCESS
- NATURAL GAS VALVE
- PERCOLATION TEST
- ANTENNA
- SATELLITE DISH
- SIGN W/ TWO POST
- SIGN W/ ONE POST
- MISCELLANEOUS POST/BOLLARD
- CONTROL POINT
- FLAGPOLE
- GUY WIRE
- JUNIPER TREE
- COTTONWOOD TREE
- MAJOR CONTOUR
- MINOR CONTOUR
- EDGE OF GRAVEL
- EDGE OF ASPHALT
- EDGE OF CONCRETE
- CHAIN LINK FENCE
- BARB WIRE FENCE
- SANITARY SEWER PIPE
- NATURAL GAS PIPE
- OVER HEAD ELECTRIC CABLE
- UNDERGROUND ELECTRIC CABLE
- DOMESTIC WATER MAIN PIPE
- CULVERT
- COMMUNICATIONS CABLE
- CONSTRUCTION LIMITS
- EROSION CONTROL WATTLE
- FINISH GRADE
- RIVER ROCK

GENERAL SYMBOLOGY

SECTION CUT MARKER

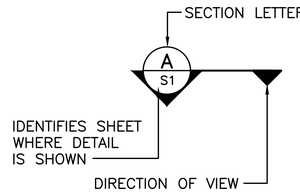

DETAIL, ELEVATION, PLAN OR SECTION TITLE

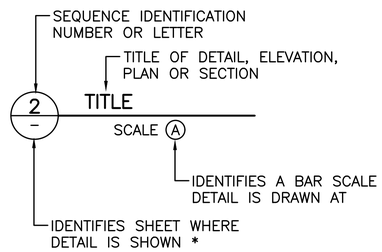

DETAIL, ELEVATION OR PLAN MARKERS

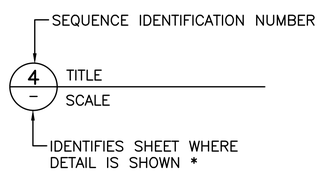

PHOTO MARKERS

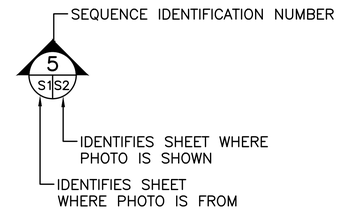

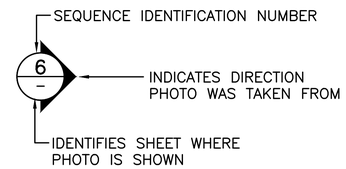

* FOR COMMON DETAILS AND SECTIONS OR DETAILS THAT ARE CUT OR CALLED OUT ON MULTIPLE SHEETS, THE SUB SHEET NUMBER IS REPLACE BY A DASH (–).

REGISTERED PROFESSIONAL ENGINEER
CHRISTOPHER M. BAILEY
PE-28356
DATE 4-17-26
NORTH DAKOTA

DESIGNED:	SUB SHEET NO.	TITLE OF SHEET	DRAWING NO.
L. SHAGLA	G1	LEGENDS	80051 168
DADD A. STRAHL			PMIS/PKG NO. 345002
TECH. REVIEW: C. BAILEY		KNIFE RIVER INDIAN VILLAGES N.H.S.	SHEET 2 OF 22
DATE: 04/17/2026			

4/13/2026 12:24 PM ASTRAHL R24 C:\pwworking\central02\d0168596\G1 Legends.dwg

A/C	AIR CONDITIONING
A/E	ARCHITECT/ENGINEER
A	AMPERE
AB	ANCHOR BOLT
ABAN	ABANDON
ABC	AGGREGATE BASE COURSE
ABT	ABOUT
AC	ALTERNATING CURRENT
ACK	ACKNOWLEDGE
ACP	ACOUSTIC CEILING PANEL, ASPHALTIC CONCRETE PAVEMENT
ACST	ACOUSTIC
AD	ADDENDUM, AREA DRAIN
ADDL	ADDITIONAL
ADH	ADHESIVE
ADJ	ADJUSTABLE, ADJACENT
AF	AMP FRAME, AMP FUSE
AFF	ABOVE FINISH FLOOR
AFG	ABOVE FINISH GRADE
AGGR	AGGREGATE
AI	AREA INLET, ANALOG INPUT
AIC	AMPS INTERRUPTING CAPACITY
ALIG	ALIGNMENT
ALT	ALTERNATE, ALTITUDE
ALUM	ALUMINUM
AM	ACOUSTICAL MATERIAL
AMB	AMBIENT
ANC	ANCHOR
AO	ANALOG OUTPUT
AP	ACCESS PANEL
APRX	APPROXIMATE
APVD	APPROVED
ARCH	ARCHITECTURAL
ASSY	ASSEMBLY
AT	ACOUSTICAL TILE, AMP TRIP
ATC	ACOUSTICAL TILE CEILING
ATM	ATMOSPHERE
AUTO	AUTOMATIC
AUX	AUXILIARY
AVE	AVENUE
AVG	AVERAGE
AWG	AMERICAN WIRE GAGE
AWT	ACOUSTICAL WALL TILE
B TO B	BACK TO BACK
BAL	BALANCE
BBD	BULLETIN BOARD
BC	BASE CABINET, BOTTOM CHORD, BOLT CENTER, BOLT CIRCLE
BD	BOARD
BE	BOTH ENDS, BELL END
BF	BOTH FACES, BOTTOM FACE, BLIND FLANGE, BOARD FEET
BITUM	BITUMINOUS
BKG	BACKING
BL	BASE LINE
BLDG	BUILDING
BLK	BLOCK
BLKG	BLOCKING
BM	BENCHMARK, BEAM
BOC	BACK OF CURB
BOD	BOTTOM OF DUCT
BOG	BOTTOM OF GRILLE
BOL	BOTTOM OF LOUVER, BOLLARD
BOP	BOTTOM OF PIPE
BOR	BOTTOM OF REGISTER
BOT	BOTTOM
BOU	BOTTOM OF UNIT
BP	BASE PLATE
BRG	BEARING
BRGP	BEARING PLATE
BRKT	BRACKET
BS	BOTH SIDES
BTU	BRITISH THERMAL UNIT
BTW	BETWEEN
BTWLD	BUTT WELD
BU	BELL UP, BUILT-UP
BUR	BUILT-UP ROOFING
BW	BOTH WAYS
BYP	BYPASS
C TO C	CENTER TO CENTER
C&G	CURB AND GUTTER
C	CHANNEL SHAPE, CENTIGRADE, CONDUIT
CAB	CABINET
CAP	CAPACITY
CAT	CATALOG, CATALOGIORY
CAV	CAVITY
CB	CATCH BASIN
CCB	CONCRETE BLOCK
CCW	COUNTER CLOCKWISE
CDF	CONTROLLED-DENSITY FILL
CE	CONCRETE EDGE
CER	CERAMIC
CF	CUBIC FEET (FOOT)
CFL	COUNTER FLASHING
CHBD	CHALKBOARD
CHD	CHORD
CHFR	CHAMFER
CHH	COMMUNICATION HANDHOLE
CI	CURB INLET
CIP	CAST-IN-PLACE
CIPB	CONCRETE INTERLOCKING PAVER BALLAST
CIRC	CIRCULATION, CIRCULAR
CJ	CONSTRUCTION JOINT
CJP	COMPLETE JOINT PENETRATION
CKT	CIRCUIT
CL	CENTERLINE, CLASS, CLOSE

CLG	CEILING
CLJ	CONTROL JOINT
CLKG	CAULKING
CLR	CLEAR
CMH	COMMUNICATION MANHOLE
CMP	CORRUGATED METAL PIPE
CMU	CONCRETE MASONRY UNIT
CO	CLEANOUT, CONCRETE OPENING
COL	COLUMN
COM	COMMON
COMB	COMBINATION
COMM	COMMUNICATION
COMP	COMPOSITION, COMPRESSIBLE, COMPOSITE
CON	CONCENTRIC
CONC	CONCRETE
CONN	CONNECTION
CONST	CONSTRUCTION
CONT	CONTINUOUS
COOR	COORDINATE
CORR	CORROSIVE, CORRUGATED
CP	CHECKER PLATE, CONTROL POINT
CPLG	COUPLING
CRL	CORROSION-RESISTANT LINING
CSC	COMPRESSION SLEEVE COUPLING
CSK	COUNTERSINK
CSS	CLINIC SERVICE SINK
CT	CERAMIC TILE
CTR	CENTER
CTRL	CONTROL
CVT	CULVERT
CU	COPPER, CUBIC
CW	CLOCKWISE
CY	CUBIC YARD
d	PENNY (NAIL MEASURE)
D	DEEP, DIFFUSER, DRAIN
DB	DUCT BANK, DECIBEL, DRY BULB
DBA	DEFORMED BAR ANCHOR
DBL	DOUBLE
DC	DIRECT CURRENT
DEG	DEGREE
DEG C	DEGREE CENTIGRADE
DEG F	DEGREE FAHRENHEIT
DEMO	DEMOLITION
DEP	DEPRESSED
DEPT	DEPARTMENT
DET	DETAIL
DI	DROP INLET, DUCTILE IRON, DIGITAL INPUT
DIA	DIAMETER
DIAG	DIAGONAL, DIAGRAM
DIFF	DIFFERENTIAL, DIFFERENCE
DIM	DIMENSION
DISCH	DISCHARGE
DIST	DISTANCE, DISTRIBUTION
DIV	DIVISION
DL	DEAD LOAD
DMJ	DOUBLE MECHANICAL JOINT
DMPF	DAMP PROOFING
DN	DOWN
DO	DISSOLVED OXYGEN, DIGITAL OUTPUT, DITTO
DP	DEPTH
DPDT	DOUBLE POLE, DOUBLE THROW
DPST	DOUBLE POLE, SINGLE THROW
DS	DOWN SPOUT
DT	DOUBLE TEE, DRIP TRAP ASSEMBLY
DUP	DUPLICATE
DWG	DRAWING
DWL	DOWEL
DWR	DRAWER
E	EAST
EA	EACH, EXHAUST AIR
EC	ELECTRICAL CONTRACTOR
ECC	ECCENTRIC
ED	EQUIPMENT DRAIN
EDB	ELECTRICAL DUCT BANK
EE	EACH END
EF	EACH FACE
EFF	EFFLUENT, EFFICIENCY
EHH	ELECTRICAL HANDHOLE
EIFS	EXTERIOR INSULATION & FINISH SYSTEM
EJ	EXPANSION JOINT
EL	ELBOW, ELEVATION
ELEC	ELECTRICAL
EMBD	EMBEDDED
EMER	EMERGENCY
EMH	ELECTRICAL MANHOLE
ENCL	ENCLOSURE
ENGR	ENGINEER
ENTR	ENTRANCE
EOP	EDGE OF PAVEMENT
EQ	EQUAL
EQUIP	EQUIPMENT
EQUIV	EQUIVALENT
ES	EACH SIDE, EQUAL SPACE, EMERGENCY SHOWER
ESEW	EMERGENCY SHOWER AND EYE WASH
EST	ESTIMATE
EW	EACH WAY, EMERGENCY EYE/FACE WASH
EWC	ELECTRIC WATER COOLER
EWEF	EACH WAY, EACH FACE
EWTB	EACH WAY, TOP AND BOTTOM
EXC	EXCAVATION
EXH	EXHAUST
EXP	EXPANSION, EXPOSED
EXST	EXISTING
EXT	EXTERIOR, EXTERNAL, EXTENSION

F TO F	FACE TO FACE
F&B	FACE & BYPASS
FAB	FABRICATE
FB	FLOOR BEAM
FBD	FIBERBOARD
FBG	FIBERGLASS
FBM	BOARD FOOT MEASURE
FBO	FURNISHED BY OWNER
FC	FLUSHING CONNECTION
FCA	FLANGED COUPLING ADAPTER
FD	FLOOR DRAIN
FDC	FLEXIBLE DUCT CONNECTION
FDR	FEEDER
FDTN	FOUNDATION
FE	FLANGED END
FEC	FIRE EXTINGUISHER CABINET
FES	FLARED END SECTION
FEXT	FIRE EXTINGUISHER
FF	FAR FACE, FACTORY FINISH, FLAT FACE
FG	FINISHED GRADE
FH	FIRE HYDRANT
FIG	FIGURE
FIN	FINISH
FJT	FLUSH JOINT
FL	FLOW, FLOW LINE
FLEX	FLEXIBLE
FLG	FLANGE
FLOR	FLUORESCENT
FLR	FLOOR
FLS	FLASHING, FLUSH
FN	FENCE
FO	FINISHED OPENING
FOB	FLAT ON BOTTOM
FOC	FACE OF CONCRETE, FACE OF CURB
FOF	FACE OF FINISH
FOM	FACE OF MASONRY
FOS	FACE OF STUDS
FOT	FLAT ON TOP
FPT	FEMALE PIPE THREAD
FR	FRAME
FRP	FIBERGLASS REINFORCED PLASTIC
FRTM	FIRE RETARDANT TREATED MATERIAL
FS	FLOOR SINK, FAR SIDE
FT	FEET, FOOT
FTG	FOOTING, FITTING
FUR	FURRED, FURRING
FURN	FURNITURE, FURNISH
FUT	FUTURE
FV	FACE VELOCITY
FW	FIELD WELD, FIRE WALL
FWD	FORWARD
FWE	FURNISHED WITH EQUIPMENT
FXTR	FIXTURE
G	GRILLE, GROUND
GA	GAGE (METAL THICKNESS)
GAL	GALLON
GALV	GALVANIZED
GB	GRAB BAR, GRADE BREAK
GC	GROOVED COUPLING
GD	GUARD
GEN	GENERAL
GFCI	GROUND FAULT CIRCUIT INTERRUPTER
GFMU	GROUND FACE MASONRY UNIT
GG	GUTTER GRADE
GJ	GROOVED JOINT
GL	GLASS
GLB	GLASS BLOCK, GLULAM BEAM
GND	GROUND
GP	GUY POLE
GR	GRADE
GRTG	GRATING
GSB	GYPSUM SHEATHING BOARD
GT	GREASE TRAP
GVL	GRAVEL
GW	GUY WIRE
GWB	GYPSUM WALLBOARD
GYP	GYPSUM HARDBOARD
H	HIGH
HB	HOSE BIB
HBD	HARDBOARD
HC	HANDICAPPED, HOLLOW CORE, HORIZONTAL CURVE, HORIZONTAL CENTERLINE
HD	HEAD
HDR	HEADER
HDW	HARDWARE
HEX	HEXAGONAL
HGR	HANGER
HH	HANDHOLE
HID	HIGH-INTENSITY DISCHARGE
HM	HOLLOW METAL
HORIZ	HORIZONTAL
HP	HIGH POINT, HORSEPOWER
HPC	HORIZONTAL POINT OF CURVATURE
HPS	HIGH-PRESSURE SODIUM
HPT	HORIZONTAL POINT OF TANGENCY
HR	HOSE REEL, HOUR
HS	HEADED STUD, HIGH STRENGTH
HSS	HOLLOW STRUCTURAL SHAPE
HT	HEIGHT
HTG	HEATING
HV	HIGH VOLTAGE
HVAC	HEATING, VENTILATING AND AIR CONDITIONING
HWD	HARDWOOD
HWL	HIGH WATER LEVEL
HYD	HYDRAULIC
HZ	HERTZ, CYCLES PER SECOND

ID	INSIDE DIAMETER, INTERIOR DIMENSION
IE	INVERT ELEVATION
IF	INSIDE FACE
IH	INTAKE HOOD
IMP	IMPACT
IN	INCH
INC	INCLUDE, INCANDESCENT
INF	INFLUENT
INSTR	INSTRUMENTATION
INSUL	INSULATION
INT	INTERIOR, INTERSECTION
INTR	INTERMEDIATE, INTERIOR
INV	INVERT
IPS	IRON PIPE SIZE
IPT	INTERNAL PIPE THREAD
IR	INSIDE RADIUS, IRON ROD
IRR	IRRIGATION
ISO	ISOMETRIC
JB	JUNCTION BOX
JCT	JUNCTION
JF	JOINT FILLER
JST	JOIST
JT	JOINT
K	KIP
KB	KNEE BRACE
KCMIL	THOUSAND CIRCULAR MILS
KD	KNOCK DOWN
KO	KNOCK OUT
KSI	KIPS PER SQUARE INCH
KW	KILOWATT
L	ANGLE, LENGTH, LAVATORY
LAD	LADDER
LAM	LAMINATE
LATL	LATERAL
LB	LAG BOLT, POUND
LCTB	LIQUID CHALK AND TACK BOARD
LDG	LANDING
LDR	LEADER
LE	LIFTING EYE
LF	LINEAR FOOT
LG	LONG
LH	LEFT HAND
LIN	LINEAR
LIQ	LIQUID
LLH	LONG LEG HORIZONTAL
LLV	LONG LEG VERTICAL
LMLU	LIQUID MARKER LECTURE UNIT
LNG	LONGITUDINAL
LOC	LOCATION
LP	LOW POINT
LPS	LOW-PRESSURE SODIUM
LR	LONG RADIUS
LT	LEFT
LTD	LIMITED
LTG	LIGHTING
LTL	LINTEL
LTNG	LIGHTNING
LV	LOW VOLTAGE
LVL	LAMINATED VENEER LUMBER
LVR	LOUVER
LW	LIGHTWEIGHT
LWC	LIGHTWEIGHT CONCRETE
LWL	LOW WATER LEVEL
MA	MIXED AIR
MACH	MACHINED
MAINT	MAINTENANCE
MAN	MANUAL
MATL	MATERIAL
MAX	MAXIMUM
MB	MACHINE BOLT
MBR	MEMBER
MC	MECHANICAL CONTRACTOR, MECHANICAL COUPLING
MCB	METAL CORNER BEAD
MCJ	MASONRY CONTROL JOINT
MDMJ	MODIFIED DOUBLE MECHANICAL JOINT
MECH	MECHANICAL
MED	MEDIUM
MFR	MANUFACTURER
MH	MANHOLE, METAL HALIDE
MIN	MINIMUM
MIR	MIRROR
MISC	MISCELLANEOUS
MJ	MECHANICAL JOINT
MLO	MAIN LUGS ONLY
MMB	MEMBRANE
MO	MASONRY OPENING
MOD	MODULAR, MODIFY
MON	MONUMENT
MPT	MALE PIPE THREAD
MRGWB	MOISTURE-RESISTANT GYPSUM WALLBOARD
MS	MOP SINK
MSL	MEAN SEA LEVEL
MT	MOUNT
MU	MASONRY UNIT
MULL	MULLION
MV	MEDIUM VOLTAGE
MW	MONITORING WELL

N	NORTH, NEUTRAL
NA	NOT APPLICABLE
NAT	NATURAL, NATIONAL
NC	NORMALLY CLOSED
NEG	NEGATIVE
NF	NEAR FACE, NON-FUSED
NIC	NOT IN CONTRACT
NO	NORMALLY OPEN, NUMBER
NOM	NOMINAL
NPS	NOMINAL PIPE SIZE
NPT	NATIONAL PIPE THREAD
NS	NEAR SIDE
NTS	NOT TO SCALE
NWL	NORMAL WATER LEVEL
O TO O	OUT TO OUT
OA	OUTSIDE AIR, OVERALL
OC	ON CENTER
OCPD	OVER CURRENT PROTECTION DEVICE
OD	OUTSIDE DIAMETER
OED	OPEN END DUCT
OF	OUTSIDE FACE, OFFICE FURNISHING
OFCI	OWNER FURNISHED CONTRACTOR INSTALLED
OFOI	OWNER FURNISHED OWNER INSTALLED
OG	ORIGINAL GROUND
OH	OVERHEAD
OPNG	OPENING
OPP	OPPOSITE
OPT	OPTIONAL
OR	OUTSIDE RADIUS
ORD	OVERFLOW ROOF DRAIN
ORIG	ORIGINAL
OVFL	OVERFLOW
OVHG	OVERHANG
OZ	OUNCE
P	PAINT
PA	PUBLIC ADDRESS
PAR	PARALLEL, PARAPET
PB	PANIC BAR, PULL BOX
PBD	PARTICLE BOARD
PC	POINT OF CURVE, PIECE, PRECAST
PCC	POINT OF COMPOUND CURVATURE
PCF	POUNDS PER CUBIC FOOT
PCT	PERCENT
PE	PLAIN END
PED	PEDESTAL
PEN	PENETRATION
PERF	PERFORATED
PERM	PERMANENT
PERP	PERPENDICULAR
PF	POWER FACTOR
PFMU	PREFACED MASONRY UNIT
PH	PHASE
PI	POINT OF INTERSECTION
PKG	PACKAGE
PL	PLATE, PROPERTY LINE
PLAS	PLASTER
PLAT	PLATFORM
PLBG	PLUMBING
PLF	POUNDS PER LINEAR FOOT
PNEU	PNEUMATIC
POL	POLISH
POS	POSITIVE, POSITION
PP	POLYPROPYLENE, POWER POLE
PRC	POINT OF REVERSE CURVATURE
PREF	PREFINISHED
PREFAB	PREFABRICATED
PRELIM	PRELIMINARY
PREP	PREPARE
PRES	PRESSURE
PRI	PRIMARY
PROP	PROPERTY, PROPOSED
PROT	PROTECTION
PS	PIPE SUPPORT
PSF	POUNDS PER SQUARE FOOT
PSI	POUNDS PER SQUARE INCH
PSIA	POUNDS PER SQUARE INCH ABSOLUTE
PSIG	POUNDS PER SQUARE INCH GAGE
PST	PRESTRESSED
PT	POINT, POINT OF TANGENCY
PTFE	POLYTETRAFLUOROETHYLENE
PTN	PARTITION
PVC	POLYVINYL CHLORIDE, POINT OF VERTICAL CURVE
PVMT	PAVEMENT
PWD	PLYWOOD
PWJ	PLYWOOD WEB JOIST
PZ	PIEZOMETER
Q	RATE OF FLOW
QT	QUARRY TILE
QTR	QUARTER
QTY	QUANTITY
QUAL	QUALITY

R&R	REMOVE AND REPLACE
R&S	REMOVE AND SALVAGE
R	RADIUS, REGISTER, RISER
RA	RETURN AIR
RB	RESILIENT BASE, ROCK BERM
RCPT	RECEPTACLE
RD	ROOF DRAIN
REC	RECESS
RECD	RECEIVED
RECT	RECTANGULAR
RED	REDUCER
REF	REFERENCE
REINF	REINFORCING
REM	REMOVE
REQD	REQUIRED
RESIL	RESILIENT
RET	RETAINING, RETURN
REV	REVISION, REVERSE
RF	RESILIENT FLOORING
RFG	ROOFING
RFL	REFLECTED, REFLECTOR
RGH	ROUGH
RGS	RIGID GALVANIZED STEEL
RGS-PVC	PVC COATED RGS
RH	RELIEF HOOD, RIGHT HAND, RELATIVE HUMIDITY
RL	REQUIRED LAP
RLFA	RELIEF AIR
RND	ROUND
RNG	RUNNING
RO	ROUGH OPENING
ROW	RIGHT-OF-WAY
RPM	REVOLUTIONS PER MINUTE
RR	RAILROAD
RSP	ROCK SLOPE PROTECTION
RT	RIGHT
RVT	RESILIENT VINYL TILE
RY	READY
S	SOUTH, SINK
SA	SUPPLY AIR
SAMU	SOUND-ABSORBING MASONRY UNIT
SAN	SANITARY
SB	SPLASH BLOCK
SC	SOLID CORE
SCH	SCHEDULE
SCHEM	SCHEMATIC
SCN	SCREEN
SE	STEEL/ALUMINUM EDGE
SEC	SECONDARY, SECONDS
SECT	SECTION
SEP	SEPARATE
SF	SQUARE FOOT, SILT FENCE
SG	SHEET GLASS, SEALANT GROOVE
SH	SHOWER
SHT	SHEET
SHTG	SHEATHING
SIL	SILENCE
SIM	SIMILAR
SL	SLOPE
SLTD	SLOTTED
SLV	SLEEVE
SMLS	SEAMLESS
SOG	SLAB ON GRADE
SP	SOUNDPROOF, STANDPIPE
SPA	SPACING
SPEC	SPECIFICATION
SPLY	SUPPLY
SPST	SINGLE POLE SINGLE THROW
SPT	SET POINT
SQ	SQUARE
SR	SHORT RADIUS
SS	SERVICE SINK
SST	STAINLESS STEEL
ST	STREET
STA	STATION
STD	STANDARD
STIF	STIFFENER
STIR	STIRRUP
STL	STEEL
STOR	STORAGE
STR	STRUCTURAL, STRAIGHT
SUB	SUBSTITUTE
SUC	SUCTION
SUSP	SUSPENDED
SY	SQUARE YARD
SYM	SYMBOL
SYMM	SYMMETRICAL
SYN	SYNTHETIC
SYS	SYSTEM
T&B	TOP AND BOTTOM
T&G	TONGUE AND GROOVE
T	TILE, TREAD
TA	TOILET ACCESSORY, TEMPERED AIR
TAN	TANGENT
TBM	TEMPORARY BENCHMARK
TCE	TEMPORARY CONSTRUCTION EASEMENT
TEF	TROWELED EPOXY FLOORING
TEMP	TEMPORARY, TEMPERATURE
THD	THREAD
THK	THICK
THRESH	THRESHOLD
TKBD	TACK BOARD

TOB	TOP OF BOLT, TOP OF BANK, TOP OF BEAM, TOP OF BERM
TOC	TOP OF CURB, TOP OF CONCRETE
TOD	TOP OF DECK
TOF	TOP OF FOOTING
TOG	TOP OF GRATING
TOL	TOLERANCE, TOP OF LEDGER
TOM	TOP OF MASONRY
TOP	TOP OF PLATE
TOPO	TOPOGRAPHY
TOS	TOP OF SLAB, TOP OF STEEL, TOE OF SLOPE
TOW	TOP OF WALL
TP	TOILET PARTITION, TELEPHONE POLE, TOE PLATE, TRAP PRIMER
TPD	TOILET PAPER DISPENSER
TPG	TOPPING, THROUGH PLATE GIRDER
TR	TRANSOM
TRANS	TRANSITION
TRD	TRENCH DRAIN
TYP	TYPICAL
U	URINAL
UG	UNDERGROUND
ULT	ULTIMATE
UNFN	UNFINISHED
UNO	UNLESS NOTED OTHERWISE
UTIL	UTILITY
V	VENT, VELOCITY, VOLT
VA	VOLT AMPERE
VAC	VACUUM
VAR	VARNISH, VARIABLE, VOLT AMPERES REACTIVE
VB	VAPOR BARRIER, VINYL BASE, VALVE BOX
VC	VERTICAL CURVE
VCP	VITRIFIED CLAY PIPE
VCT	VINYL COMPOSITION TILE, VERTICAL CENTERLINE
VEL	VELOCITY
VENT	VENTILATION
VERT	VERTICAL
VG	VERTICAL GRAIN
VIF	VERIFY IN FIELD
VIN	VINYL
VOL	VOLUME
VPC	VERTICAL POINT OF CURVATURE
VPI	VERTICAL POINT OF INTERSECTION
VPT	VERTICAL POINT OF TANGENCY
VS	VERSUS, VAPOR SEAL
VTR	VENT THROUGH ROOF
VWC	VINYL WALL COVERING
W/	WITH
W/O	WITHOUT
W	WATT, WEST, WIDE, WINDOW, WIRE, WIDE FLANGE BEAM
WB	WOOD BASE
WC	WATER CLOSET, WATER COLUMN
WD	WOOD, WIDTH
WF	WIDE FLANGE, WASH FOUNTAIN
WG	WIRE GLASS, WATER GAGE
WH	WALL HYDRANT, WEEP HOLE
WI	WROUGHT IRON
WL	WATER LEVEL
WLD	WELDED
WM	WIRE MESH
WP	WEATHERPROOF, WORKING POINT
WS	WATERSTOP, WATER SURFACE
WSCT	WAINSCOT
WT	WEIGHT, WATER TIGHT
WTHP	WATERPROOF, WORKING POINT
WWF	WELDED WIRE FABRIC
XP	EXPLOSION-PROOF
XS	EXTRA STRONG
XSECT	CROSS SECTION
XXS	DOUBLE EXTRA STRONG
YH	YARD HYDRANT
YS	YIELD STRENGTH

GENERAL NOTES:

1. THESE ABBREVIATIONS APPLY TO THE ENTIRE SET OF CONTRACT DRAWINGS.
2. LISTING OF ABBREVIATIONS DOES NOT IMPLY THAT ALL ABBREVIATIONS ARE USED IN THE CONTRACT DRAWINGS.
3. ABBREVIATIONS SHOWN ON THIS SHEET INCLUDE VARIATIONS OF A WORD. FOR EXAMPLE, "MOD" MAY MEAN MODIFY OR MODIFICATION; "INC" MAY MEAN INCLUDED OR INCLUDING AND "REINF" MAY MEAN EITHER REINFORCE OR REINFORCING.
4. SEE INSTRUMENTATION LEGEND SHEET FOR PROJECT-SPECIFIC EQUIPMENT SYMBOLS, EQUIPMENT ABBREVIATIONS, AND PIPING SYSTEM ABBREVIATIONS.

REGISTERED PROFESSIONAL ENGINEER
CHRISTOPHER M. BAILEY
PE-28356
DATE 4-17-26
NORTH DAKOTA

DESIGNED: L. SHAGLA CADD A. STRAHL TECH. REVIEW: C. BAILEY DATE: 04/17/2026	SUB SHEET NO. G2	TITLE OF SHEET ABBREVIATIONS KNIFE RIVER INDIAN VILLAGES N.H.S.	DRAWING NO. 80051 168 PMIS/PKG NO. 345002 SHEET 3 OF 22

4/13/2026 12:24 PM ASTRAHL R24 C:\pwworking\central02\d0168596\G2 Abbreviations.dwg

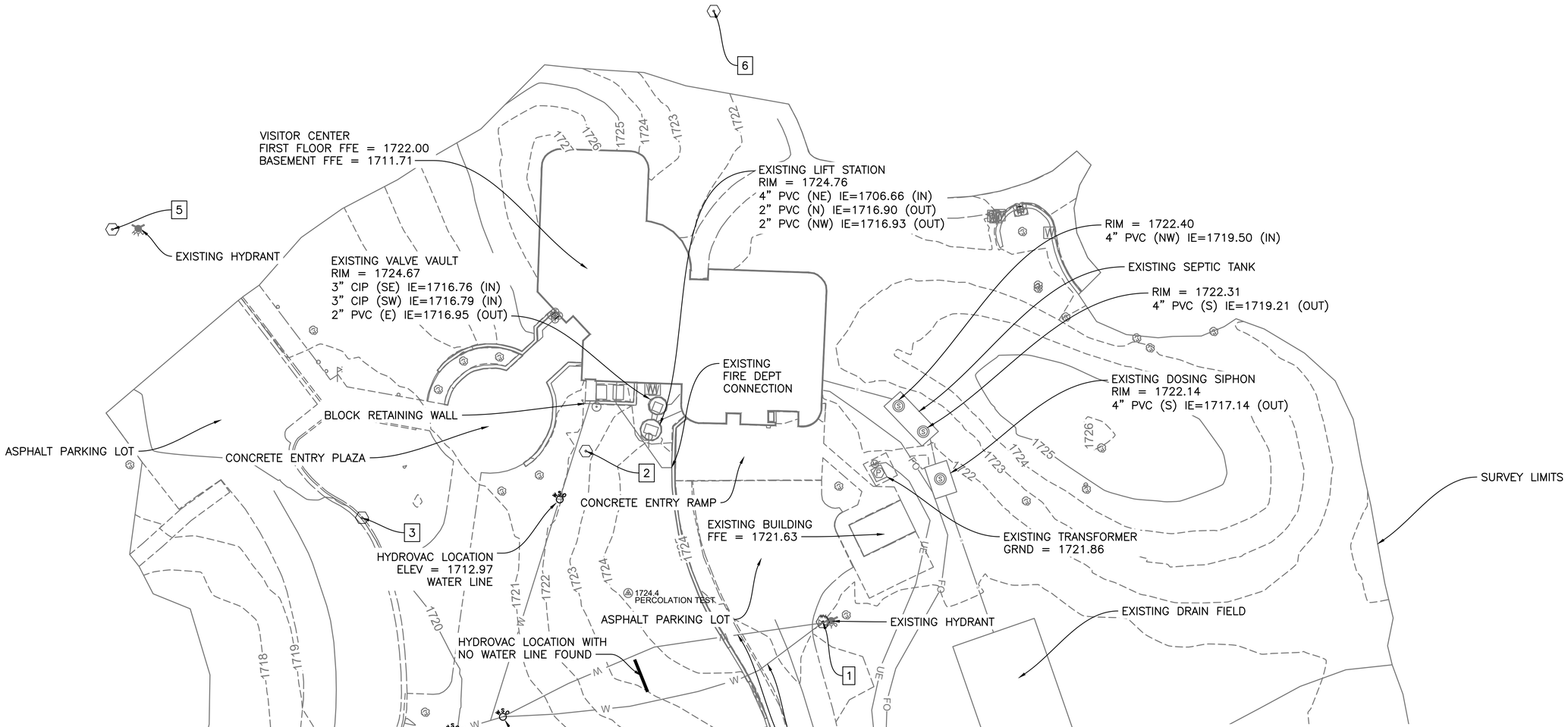

Control Point Table

Point #	Northing	Easting	Elevation	Description
1	608290.44	1749007.93	1720.99	Dimple drilled into north rim of existing water valve box
2	608349.91	1748925.48	1722.14	Dimple drilled into north rim of existing water valve box
3	608326.71	1748847.59	1720.54	Nail set in top back of concrete curb and gutter
4	608168.63	1748520.39	1716.97	1/2" Rebar
5	608427.10	1748760.69	1720.86	Dimple drilled into north rim of existing water valve box
6	608503.11	1748969.97	1721.53	Scribed "X" at north edge of concrete sidewalk

COORDINATES ON THIS PLAN SET ARE BASED ON U.S. STATE PLANE COORDINATE SYSTEM, NAD83(2011), NORTH DAKOTA SOUTH 3302. VERTICAL DATUM IS NAVD88, GEOID18 (CONUS) WAS USED. DISTANCES SHOWN ON THIS PLAN SET ARE GRID DISTANCES AND ARE IN INTERNATIONAL FEET.

20 0 20 40
SCALE OF FEET

REGISTERED PROFESSIONAL ENGINEER
CHRISTOPHER M. BAILEY
PE-28356
DATE 4-17-26
NORTH DAKOTA

DESIGNED:	SUB SHEET NO.	TITLE OF SHEET	DRAWING NO.
L. SHAGLA CADD A. STRAHL TECH. REVIEW: C. BAILEY DATE: 04/17/2026	C1	TOPOGRAPHIC SURVEY KNIFE RIVER INDIAN VILLAGES N.H.S.	80051 168 PMIS/PKG NO. 345002 SHEET 4 OF 22

4/13/2026 12:24 PM ASTRAHL R24 C:\pwworking\central02\d0168592\C1 Topographic Survey.dwg

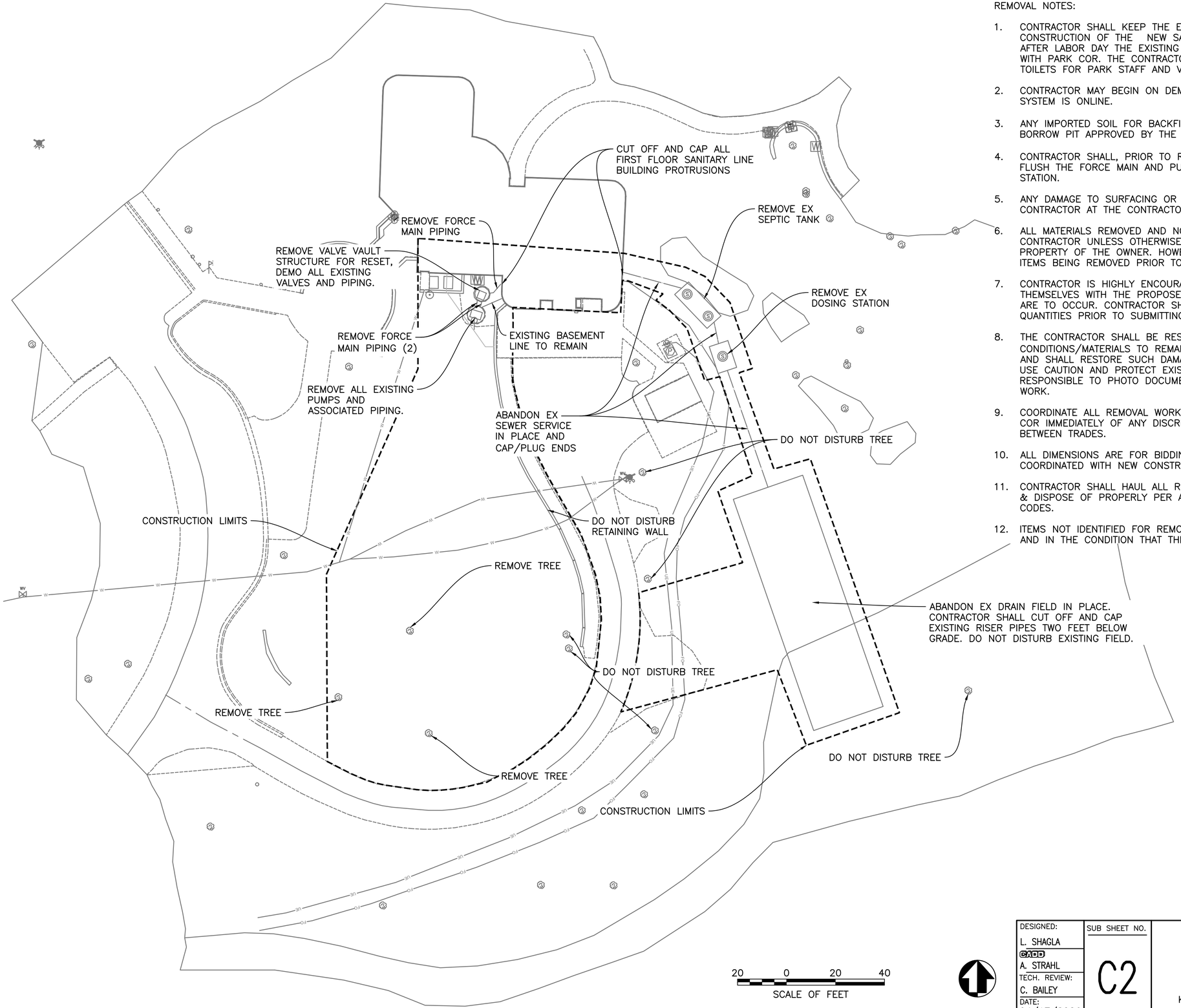

REMOVAL NOTES:

1. CONTRACTOR SHALL KEEP THE EXISTING SYSTEM OPERATIONAL DURING THE CONSTRUCTION OF THE NEW SANITARY SEWER SYSTEM THROUGH LABOR DAY. AFTER LABOR DAY THE EXISTING SYSTEM CAN BE TAKEN OFF LINE, COORDINATE WITH PARK COR. THE CONTRACTOR SHALL PROVIDE AND SERVICE 6 PORTABLE TOILETS FOR PARK STAFF AND VISITOR USE AT ALL TIMES.
2. CONTRACTOR MAY BEGIN ON DEMOLITION OF THE EXISTING SYSTEM WHEN THE NEW SYSTEM IS ONLINE.
3. ANY IMPORTED SOIL FOR BACKFILLING MUST BE FROM APPROVED/CERTIFIED BORROW PIT APPROVED BY THE COR.
4. CONTRACTOR SHALL, PRIOR TO REMOVAL/ABANDONMENT OF THE EXISTING SYSTEM, FLUSH THE FORCE MAIN AND PUMP OUT ALL EFFLUENT FROM THE EXISTING LIFT STATION.
5. ANY DAMAGE TO SURFACING OR EXISTING FEATURES TO BE REPAIRED BY THE CONTRACTOR AT THE CONTRACTORS EXPENSE TO THE SATISFACTION OF THE COR.
6. ALL MATERIALS REMOVED AND NOT REUSED SHALL BECOME PROPERTY OF THE CONTRACTOR UNLESS OTHERWISE SPECIFICALLY DESIGNATED TO REMAIN ON THE PROPERTY OF THE OWNER. HOWEVER, THE OWNER RESERVES THE RIGHT TO ALL ITEMS BEING REMOVED PRIOR TO THE SCHEDULED TIME OF REMOVAL.
7. CONTRACTOR IS HIGHLY ENCOURAGED TO VISIT THE SITE IN ORDER TO FAMILIARIZE THEMSELVES WITH THE PROPOSED IMPROVEMENTS AND SCOPE OF REMOVALS THAT ARE TO OCCUR. CONTRACTOR SHALL BE RESPONSIBLE FOR DETERMINING ALL QUANTITIES PRIOR TO SUBMITTING A BID.
8. THE CONTRACTOR SHALL BE RESPONSIBLE FOR DAMAGE TO EXISTING CONDITIONS/MATERIALS TO REMAIN RESULTING FROM WORK UNDER THIS CONTRACT, AND SHALL RESTORE SUCH DAMAGE TO ITS ORIGINAL CONDITION. CONTRACTOR TO USE CAUTION AND PROTECT EXISTING CONDITIONS AS DEEMED PRUDENT AND IS RESPONSIBLE TO PHOTO DOCUMENT EXISTING CONDITIONS PRIOR TO THE START OF WORK.
9. COORDINATE ALL REMOVAL WORK BETWEEN ALL TRADES AS APPLICABLE. NOTIFY COR IMMEDIATELY OF ANY DISCREPANCIES IN THE DESIGN OR ON-SITE CONFLICTS BETWEEN TRADES.
10. ALL DIMENSIONS ARE FOR BIDDING PURPOSES ONLY, AND SHALL BE VERIFIED AND COORDINATED WITH NEW CONSTRUCTION.
11. CONTRACTOR SHALL HAUL ALL REMOVAL DEBRIS COMPLETELY AWAY FROM THE SITE & DISPOSE OF PROPERLY PER ALL APPLICABLE AND REQUIRED LOCAL LAWS AND CODES.
12. ITEMS NOT IDENTIFIED FOR REMOVAL IN DOCUMENTS SHALL REMAIN AS EXISTING AND IN THE CONDITION THAT THEY ARE TO CURRENT DATE.

REGISTERED PROFESSIONAL ENGINEER
CHRISTOPHER M. BAILEY
PE-28356
DATE 4-17-26
NORTH DAKOTA

DESIGNED: L. SHAGLA DADD A. STRAHL TECH. REVIEW: C. BAILEY DATE: 04/17/2026	SUB SHEET NO. C2	TITLE OF SHEET SITE DEMOLITION KNIFE RIVER INDIAN VILLAGES N.H.S.	DRAWING NO. 80051 168 PMIS/PKG NO. 345002 SHEET 5 OF 22

4/16/2026 8:31 AM ASTRAHL R24 C:\pwworking\central02\d0168592\C2 Site Demolition.dwg

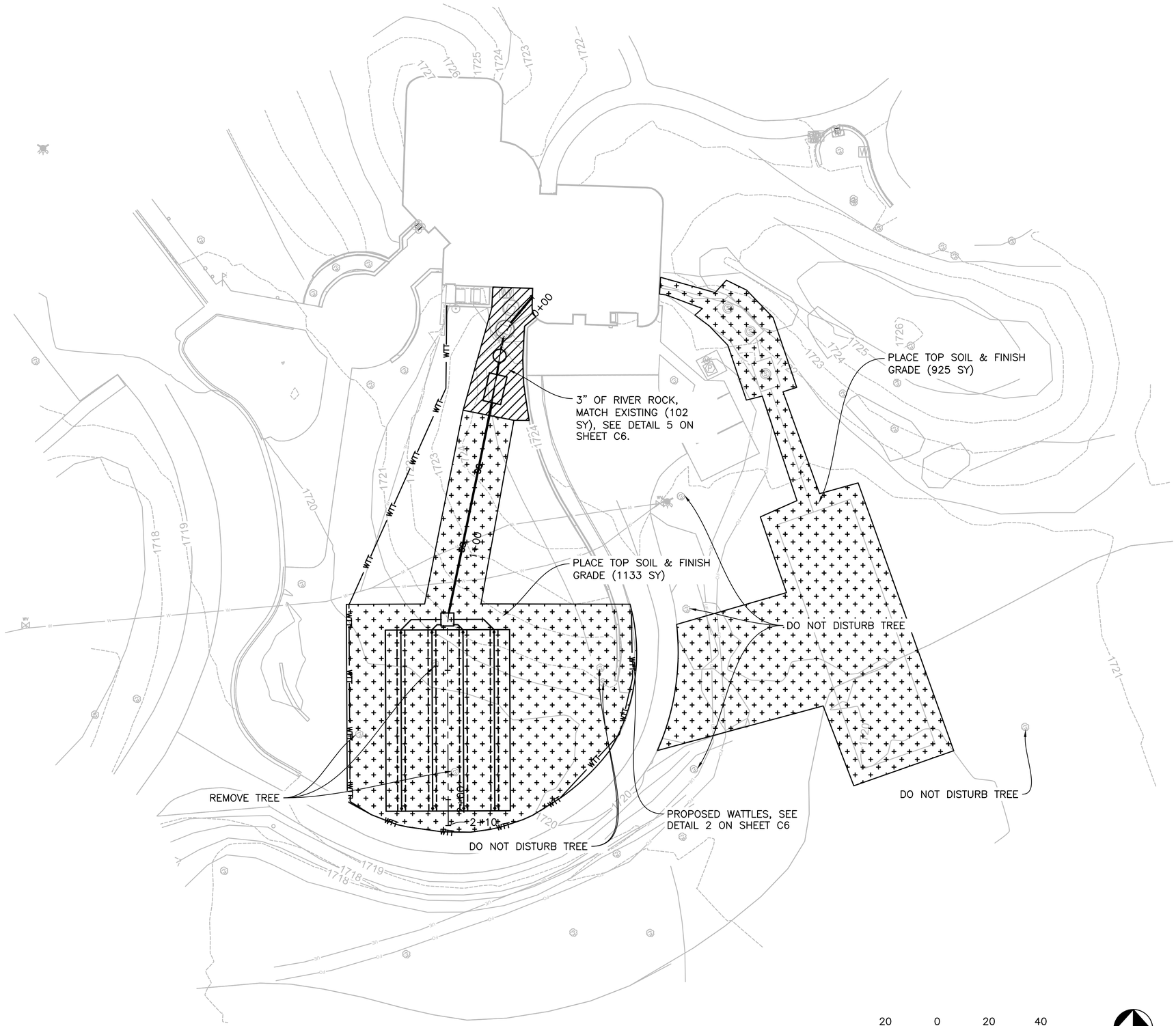

SWPPP NOTES:

1. ALL CONTRACTORS/SUBCONTRACTORS SHALL CONDUCT THEIR OPERATIONS IN A MANNER THAT MINIMIZES EROSION AND PREVENTS SEDIMENTS FROM LEAVING THE LIMITS OF CONSTRUCTION. THE PRIME CONTRACTOR SHALL BE RESPONSIBLE FOR THE DEVELOPMENT, IMPLEMENTATION AND COMPLIANCE WITH THE REQUIREMENTS OF THE PERMIT OF THE STORM WATER POLLUTION PREVENTION PLAN (SWPPP) FOR THEIR ENTIRE CONTRACT. THIS RESPONSIBILITY SHALL BE FURTHER SHARED WITH SUBCONTRACTORS WHOSE WORK IS A SOURCE OF POTENTIAL POLLUTION AS DEFINED IN THE SWPPP. SEE DIVISION 01 FOR VEHICLE CLEANING REQUIREMENTS.
2. PRIOR TO BEGINNING GRADING, EXCAVATION, OR CLEARING AND GRUBBING OPERATIONS, WATTLES SHALL BE PLACED ALONG THE PERIMETER OF THE AREAS TO BE DISTURBED AT LOCATIONS WHERE RUNOFF CAN MOVE OFFSITE. VEGETATION IN AREAS NOT NEEDED FOR CONSTRUCTION SHALL BE PRESERVED. AS AREAS REACH THEIR FINAL GRADE, ADDITIONAL WATTLES SHALL BE INSTALLED AS SPECIFIED IN THE PLANS AND/OR AS REQUIRED BY THE CONTRACTING OFFICER. THIS WILL INCLUDE USING WATTLES AS DITCH CHECKS AND TO PROTECT EXISTING CULVERTS. THIS WORK SHALL BE DONE IN ACCORDANCE WITH DIVISION 01 AND SECTION 31 10 00 OF THE SPECIFICATIONS. AS THE WORK PROGRESSES, ADDITIONAL EROSION CONTROL ITEMS SHALL BE INSTALLED BY THE EROSION CONTROL CONTRACTOR AS DETERMINED BY THE CONTRACTING OFFICER AFTER FIELD INVESTIGATION. THE CONSTRUCTION WILL BE COMPLETED WITH ESTABLISHMENT OF PERMANENT PERENNIAL VEGETATION OF ALL DISTURBED AREAS BY NPS.
3. CONTRACTOR SHALL INSTALL WATTLES AND OR SILT FENCE AS NECESSARY TO KEEP SEDIMENT FROM THE PROJECT AREA FROM LEAVING THE SITE.
4. CONTRACTOR DISPOSAL OF UNUSED CONSTRUCTION MATERIALS AND CONSTRUCTION MATERIAL WASTES SHALL COMPLY WITH APPLICABLE STATE AND LOCAL WASTE DISPOSAL REGULATIONS. IN THE EVENT OF A CONFLICT WITH OTHER GOVERNMENTAL LAWS, RULES AND REGULATIONS, THE MORE RESTRICTIVE LAWS, RULES OR REGULATIONS SHALL APPLY.
5. THE CONTRACTOR IS REQUIRED TO MAINTAIN ALL TEMPORARY EROSION CONTROL MEASURES IN PROPER WORKING ORDER, INCLUDING CLEANING, REPAIRING, OR REPLACING THEM THROUGHOUT THE CONTRACT PERIOD AND UNTIL VEGETATION IS ESTABLISHED. CLEANING OF SILT CONTROL DEVICES SHALL BEGIN WHEN THE FEATURES HAVE LOST 50% OF THEIR CAPACITY.
6. PERMITTEES MUST INSPECT DESIGNATED AREAS AT LEAST ONCE EVERY 14 CALENDAR DAYS AND WITHIN 24 HOURS AFTER ANY STORM EVENT OF 0.5 INCHES OR GREATER. NORTH DAKOTA DEQ ALSO RECOMMENDS THAT PERMITTEES PERFORM A "WALK THROUGH" INSPECTION OF THE CONSTRUCTION SITE BEFORE ANTICIPATED STORM EVENTS (OR SERIES OF EVENTS SUCH AS INTERMITTENT SHOWERS OVER A PERIOD OF DAYS) THAT COULD POTENTIALLY YIELD A SIGNIFICANT AMOUNT OF RUNOFF. INSPECTIONS MUST BE PERFORMED BY QUALIFIED PERSONNEL WITH EITHER THE OPERATOR'S OWN PERSONNEL OR CONSULTANTS HIRED TO PERFORM THE INSPECTIONS. THE INSPECTORS MUST BE KNOWLEDGEABLE AND POSSESS THE SKILLS TO ASSESS CONDITIONS AT THE CONSTRUCTION SITE THAT COULD IMPACT STORM WATER QUALITY AND ASSESS THE EFFECTIVENESS OF CONDITIONS AT THE CONSTRUCTION SITE THAT COULD IMPACT STORM WATER QUALITY AND ASSESS THE EFFECTIVENESS OF SEDIMENTATION AND EROSION CONTROL MEASURE CHOSEN TO CONTROL THE QUALITY OF THE SITES STORM WATER DISCHARGES.
7. NPS TO COMPLETE ALL SEEDING, COORDINATE WITH PARK AFTER FINISH GRADING AREAS ARE READY FOR SEED.

REGISTERED PROFESSIONAL ENGINEER
CHRISTOPHER M. BAILEY
PE-28356
DATE 4-17-26
NORTH DAKOTA

DESIGNED: L. SHAGLA CADD A. STRAHL TECH. REVIEW: C. BAILEY DATE: 04/17/2026	SUB SHEET NO. C3	TITLE OF SHEET EROSION CONTROL LAYOUT KNIFE RIVER INDIAN VILLAGES N.H.S.	DRAWING NO. 80051 168 PMIS/PKG NO. 345002 SHEET 6 OF 22

4/13/2026 12:24 PM ASTRAHL R24 C:\pwworking\central02\d0168592\C3 Erosion Control Layout.dwg

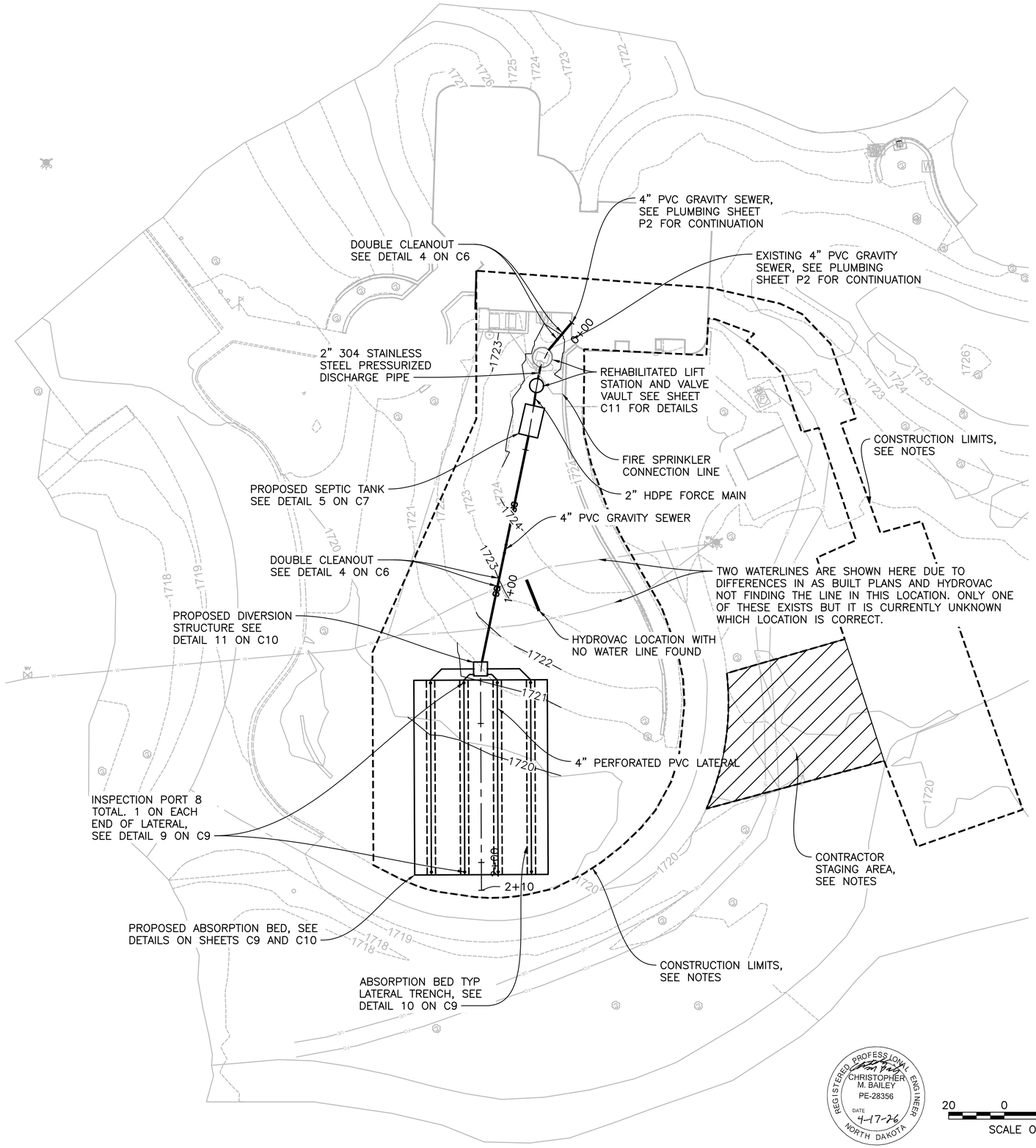

GENERAL NOTES:

1. CONTRACTOR RECEIVING AWARD IS EXPECTED TO FIELD VERIFY ALL EXISTING CONDITIONS PRIOR TO COMMENCING WORK.

2. CONTRACTOR SHALL REVIEW CONTRACT REQUIREMENTS AND PROCEDURES OUTLINED IN THE SPECIFICATIONS. THE WORK OUTLINED IN THE DRAWINGS AND SPECIFICATIONS SHALL BE INCORPORATED INTO THE GENERAL CONTRACT. THE GENERAL CONTRACTOR SHALL BE RESPONSIBLE FOR ALL PERMITS, MATERIALS, METHODS, AND MEANS REQUIRED TO EXECUTE THE GENERAL CONTRACT AND PROVIDE A FINISHED PRODUCT.

3. PROTECT ALL SITE LOCATIONS AND EXISTING CONDITIONS THAT ARE NOT DESIGNATED FOR REMOVAL. ANY DAMAGE CAUSED BY THE CONTRACTOR'S OPERATIONS ANYWHERE THROUGHOUT THE PROJECT SHALL BE REPAIRED AT THE CONTRACTOR'S EXPENSE. REPAIR ALL DAMAGE DUE TO PROJECT, INCLUDING BUT NOT LIMITED TO CURBS, PAVING, TURF DISTURBANCE, EQUIPMENT, VEGETATION, ADJACENT WALLS, SIGNS, EQUIPMENT, ROOFING, ETC. AS REQUIRED TO MATCH EXISTING.

4. ALL DIMENSIONS ARE TO EDGE OF PAVEMENT(S), UNLESS NOTED OTHERWISE. REVIEW PLACEMENT OF SITE COMPONENTS PRIOR TO COMMENCING CONSTRUCTION. ALL DIMENSIONS ARE FOR BIDDING PURPOSES ONLY. ACTUAL FIELD DIMENSIONS SHALL BE VERIFIED PRIOR TO SUBMITTING SHOP DRAWINGS, ORDERING RELATED MATERIALS, DEMOLITION AND BUILD BACK CONSTRUCTION. SITE CONDITIONS SHALL BE REVIEWED FOR WORKABILITY, ADJACENT CONDITIONS, EFFECTS, AND ACCESSIBILITY. REVIEW ANY DISCREPANCIES WITH COR PRIOR TO CONSTRUCTION AND/OR FABRICATION.

5. IN THE EVENT THAT UNFORESEEN CONDITIONS ARE ENCOUNTERED, CONTRACTOR SHALL NOTIFY COR AND STOP WORKING IMMEDIATELY UNTIL A DETERMINATION CAN BE MADE AND CONTRACTOR RECEIVES DIRECTION FROM CO/COR IN WRITING.

6. ALL MATERIALS SHALL BE NEW UNLESS SPECIFICALLY NOTED OTHERWISE.

7. ALL WORK SHALL COMPLY WITH APPLICABLE CODES, REGULATIONS, AND ORDINANCES.

8. THE CONTRACTOR SHALL PERFORM ALL TESTS AS SPECIFIED OR AS NECESSARY TO DEMONSTRATE COMPLETE AND SATISFACTORY INSTALLATIONS OF ALL SYSTEMS PROVIDED UNDER THIS CONTRACT.

9. CONTRACTOR IS RESPONSIBLE FOR SECURING THE CONSTRUCTION AREA AND SHALL BE RESPONSIBLE FOR DAMAGES/THEFT RESULTING FROM NEGLECT AND UNAUTHORIZED ACCESS VIA THE CONSTRUCTION SITE. COORDINATE SECURITY MEASURES WITH COR AND PARK STAFF.

10. VERIFY ALL LOCATIONS OF UNDERGROUND UTILITIES AND SERVICES. PROTECT ACCORDINGLY. CONTRACTOR SHALL CALL LOCAL ONE–CALL UTILITY SERVICES AS REQUIRED BY LAW.

11. IT IS THE INTENT OF THIS CONTRACT THAT ALL AREAS AFFECTED BY CONSTRUCTION BE A FINISHED AND COMPLETED PRODUCT. CONTRACTOR SHALL PATCH, REPAIR, AND ADJUST AS REQUIRED TO ACHIEVE FINISHED PRODUCT. FOR AREAS NOT PARTICULARLY DETAILED, THE QUALITY AND DESIGN SHALL MATCH THE INTENT SHOWN IN OTHER AREAS. NOTIFY THE COR PRIOR TO PROCEEDING WITH ANY AREAS REQUIRING DIRECTION OR CLARIFICATION.

12. ALL QUANTITIES NOTED WITHIN THIS PLAN SET ARE APPROXIMATE AND PROVIDED FOR THE CONVENIENCE OF THE CONTRACTOR. THE CONTRACTOR IS RESPONSIBLE FOR DETERMINING ALL QUANTITIES PRIOR TO SUBMITTING A BID AND COMMENCING CONSTRUCTION.

CONTRACTOR STAGING AREA NOTES:

1. CONTRACTOR TO COORDINATE ALL STAGING AREA ACTIONS AND ACTIVITIES WITH NPS CONTRACTING OFFICER'S REPRESENTATIVE (COR) AND SHALL NOT PROCEED UNTIL APPROVAL IS GRANTED IN WRITING BY THE COR.

2. THE CONTRACTOR SHALL LIMIT ALL STAGING OF EQUIPMENT AND MATERIALS AS WELL AS CONCRETE WASHOUT LOCATIONS TO THE LIMITS SHOWN WITHIN THE EXISTING TURF GRASS LAWN AREA. ANY ADDITIONAL REQUIRED AREAS ARE SUBJECT TO APPROVAL BY THE COR.

3. CONTRACTOR SHALL COMPLETE ALL WORK WITHIN THE IDENTIFIED CONSTRUCTION LIMITS. ANY DISTURBED AREAS OR DAMAGED SURFACING OUTSIDE OF THE WORK LIMITS SHALL BE REPAIRED TO THE SATISFACTION OF THE COR AT THE CONTRACTORS EXPENSE.

4. CONTRACTOR SHALL TAKE CARE TO NOT DAMAGE STAGING AREA. IF DAMAGE DOES OCCUR CONTRACTOR SHALL REPAIR ALL STAGING AREA TO PRE–CONSTRUCTION OR BETTER CONDITION, INCLUDING BUT NOT LIMITED TO ASPHALT PAVEMENT, CONCRETE PAVEMENT, PAVEMENT MARKING AND INSTALLATION OF EROSION CONTROL BLANKET IN DISTURBED GREEN AREAS.

5. CONTRACTOR SHALL INSTALL TRAFFIC CONTROL DEVICES TO DELINEATE THE STAGING AREA

6. THE CONTRACTOR SHALL BE REQUIRED TO PROVIDE AND MAINTAIN THEIR OWN SATELLITE TOILET AND SANITARY SERVICES FOR THEIR WORKERS TO REMAIN LOCATED WITHIN THE LIMITS SHOWN. LOCATION OF TEMPORARY SANITARY FACILITIES TO BE REVIEWED AND APPROVED BY THE COR PRIOR TO COMMENCING CONSTRUCTION/MOBILIZATION.

VEHICULAR SITE ACCESS AND EQUIPMENT REQUIREMENTS AND LIMITATIONS:

1. ALL VEHICLES AND EQUIPMENT ACCESSING THE KNIFE RIVER INDIAN VILLAGES NATIONAL HISTORIC SITE SHALL BE IN PROPER WORKING ORDER WITH NO VISIBLE SIGNS OF FUEL OR FLUID LEAKS OR INAPPROPRIATE DISCHARGE. ALL VEHICLES AND EQUIPMENT SHALL BE WASHED DOWN PRIOR TO BEING BROUGHT ONSITE. THE COR RESERVES THE RIGHT TO REFUSE ENTRY OR REQUIRE REMOVAL OF ANY VEHICLE OR EQUIPMENT DEMONSTRATING DISREPAIR, MALFUNCTION, OR UNCLEAN.

2. THE CONTRACTOR SHALL NOT PARK ANY VEHICLES ONSITE FOR PERIODS OF INACTIVITY OR OVERNIGHT. PARKING SHALL BE LIMITED TO AREA DEFINED WITHIN THE STAGING PLANS, THIS SHEET.

3. HEAVY EQUIPMENT MUST STAY OFF EXISTING DRAIN FIELD NEXT TO CONTRACTOR STAGING AREA.

REGISTERED PROFESSIONAL ENGINEER
CHRISTOPHER M. BAILEY
PE-28356
DATE 4-17-26
NORTH DAKOTA

20 0 20 40
SCALE OF FEET

DESIGNED: L. SHAGLA CADD A. STRAHL TECH. REVIEW: C. BAILEY DATE: 04/17/2026	SUB SHEET NO. C4	TITLE OF SHEET SITE LAYOUT KNIFE RIVER INDIAN VILLAGES N.H.S.	DRAWING NO. 80051 168 PMIS/PKG NO. 345002 SHEET 7 OF 22

4/13/2026 12:24 PM ASTRAHL R24 C:\pwworking\central02\d0168592\C4 Site Layout.dwg

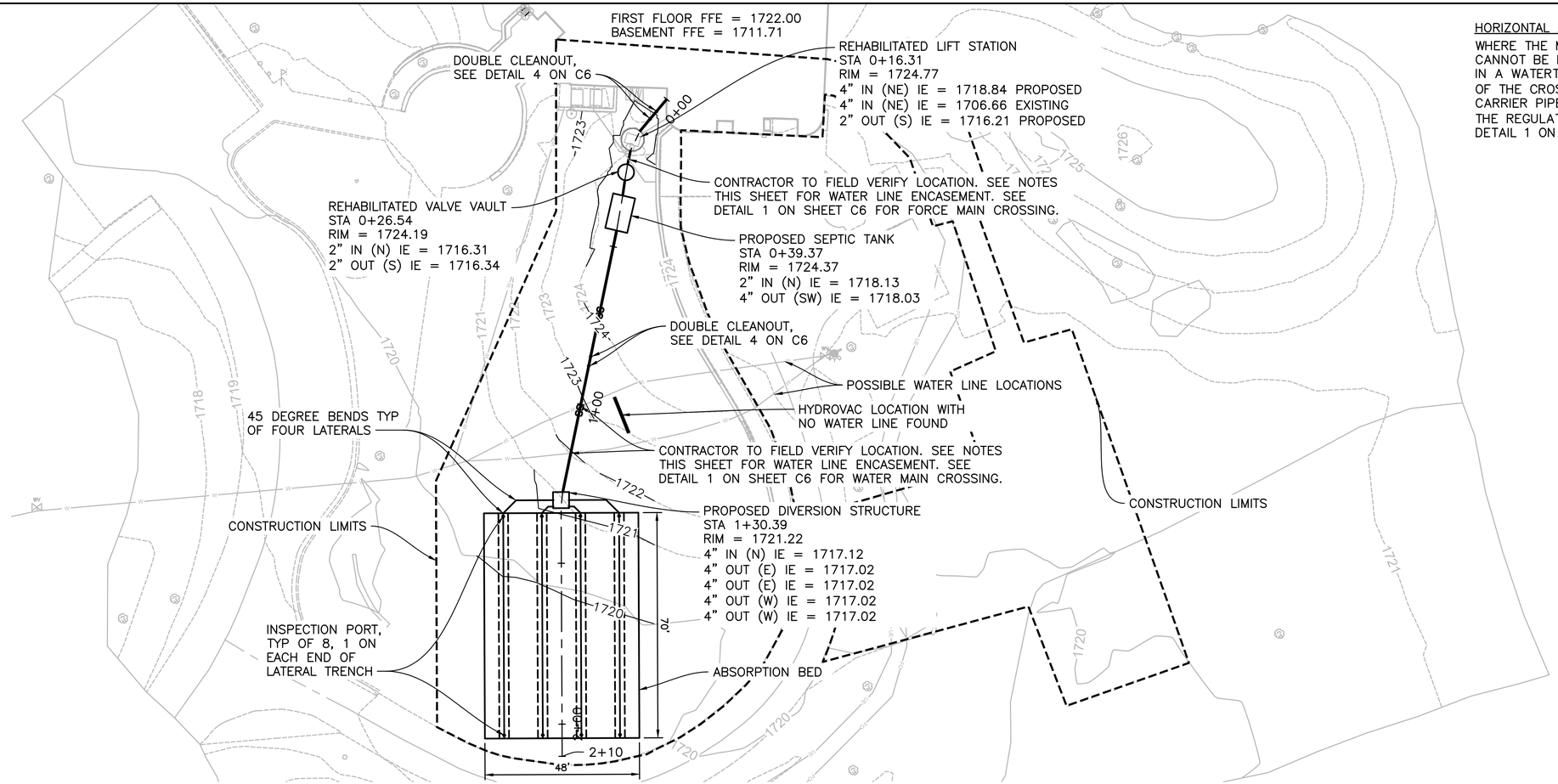

HORIZONTAL AND VERTICAL WATER AND SEWER MAIN CASING REQUIREMENTS

WHERE THE MINIMUM VERTICAL OR HORIZONTAL SEPARATION DISTANCES CANNOT BE MET, THE GRAVITY SEWER OR WATER LINE SHALL BE ENCASED IN A WATERTIGHT CARRIER PIPE THAT EXTENDS 10 FEET ON BOTH SIDES OF THE CROSSING, MEASURED PERPENDICULAR TO THE WATER MAIN (THE CARRIER PIPE SHALL BE WATERTIGHT C900 PVC OR HDPE APPROVED BY THE REGULATORY AGENCY FOR USE IN WATER MAIN CONSTRUCTION), SEE DETAIL 1 ON SHEET C6.

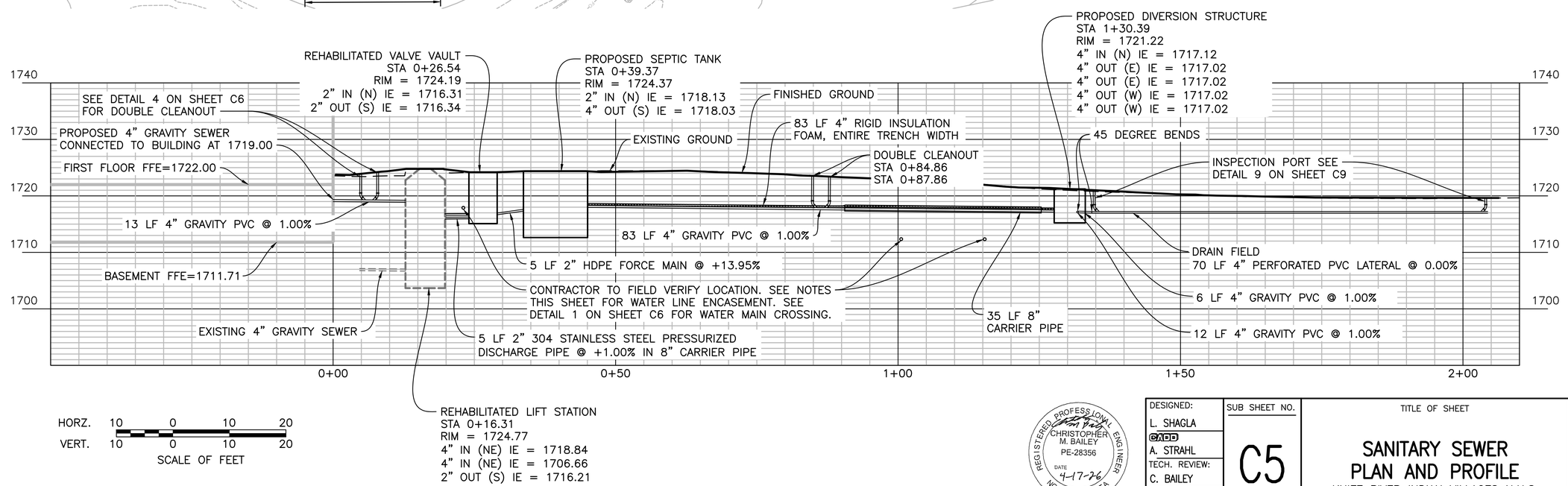

REGISTERED PROFESSIONAL ENGINEER CHRISTOPHER M. BAILEY PE-28356 DATE 4-17-26 NORTH DAKOTA

DESIGNED: L. SHAGLA	SUB SHEET NO.	TITLE OF SHEET	DRAWING NO. 80051 168
CADD A. STRAHL	C5	SANITARY SEWER PLAN AND PROFILE	PMIS/PKG NO. 345002
TECH. REVIEW: C. BAILEY		KNIFE RIVER INDIAN VILLAGES N.H.S.	SHEET 8 OF 22
DATE: 04/17/2026			

4/13/2026 12:24 PM ASTRAHL R24 C:\pwworking\central02\d0168592\C5 Sanitary Sewer P&P.dwg

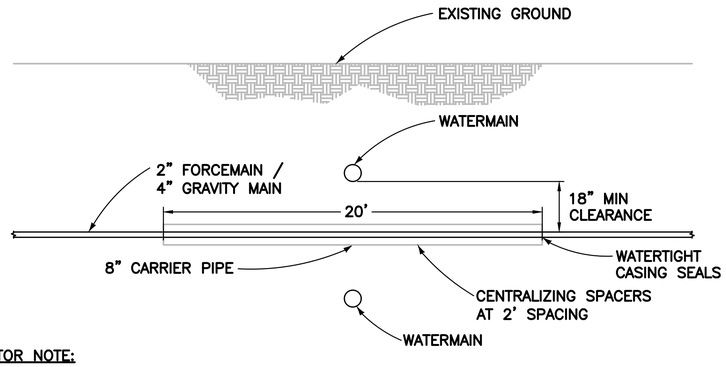

CONTRACTOR NOTE:

THE LAYING OF WATER PIPES AND SANITARY SEWERS SHALL BE IN SEPARATE TRENCHES WITH UNDISTURBED EARTH BETWEEN THEM. WHEN A WATER PIPE AND A SANITARY SEWER CROSS AND THE SEWER IS 18" OR MORE (CLEAR SPACE) BELOW THE WATER PIPE, NO EXTRA PROTECTION TO THE LATTER IS NEEDED.

1 / C6 FORCEMAIN AND GRAVITY MAIN CROSSING DETAIL

NO SCALE

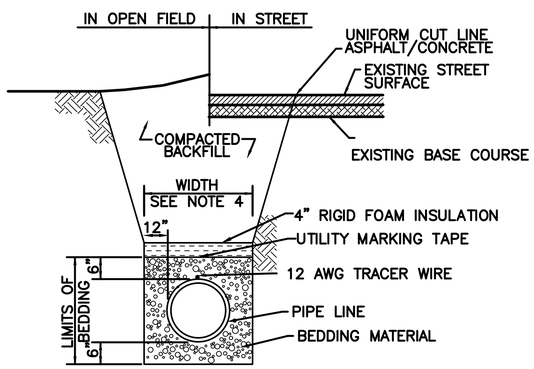

NOTES:

1. MINIMUM COVER TO BE 4' BELOW FINISHED GRADE, EXCEPT ADSORPTION FIELD.
2. TRENCH TO BE BRACED OR SHEETED AS NECESSARY FOR THE SAFETY OF THE WORKMEN AND PROTECTION OF OTHER UTILITIES IN ACCORDANCE WITH APPLICABLE LOCAL, STATE AND FEDERAL SAFETY REGULATIONS.
3. PIPE SHALL BE BEDDED FROM 6" BELOW THE BOTTOM OF THE PIPE TO 6" ABOVE THE TOP OF THE PIPE.
4. TRENCH WIDTH SHALL NOT BE MORE THAN 16" NOR LESS THAN 12" WIDER THAN THE LARGEST OUTSIDE DIAMETER OF THE PIPE.
5. SHOULD THE TRENCH BE EXCAVATED WIDER THAN ALLOWED A CONCRETE CRADLE SHALL BE PLACED WITH 2,500 P.S.I CONCRETE FROM TRENCH BOTTOM TO PIPE SPRINGLINE.
6. INSTALLATION OF BEDDING AND PIPE: AFTER COMPLETION OF THE TRENCH EXCAVATION AND PROPER PREPARATION OF THE FOUNDATION, SIX INCHES (6") OF BEDDING MATERIAL SHALL BE PLACED ON THE TRENCH BOTTOM FOR SUPPORT UNDER THE PIPE. BELL HOLES SHALL BE DUG DEEP ENOUGH TO PROVIDE A MINIMUM OF TWO INCHES (2") OF CLEARANCE BETWEEN THE BELL AND BEDDING MATERIAL. ALL PIPE SHALL BE INSTALLED IN SUCH A MANNER AS TO INSURE FULL SUPPORT OF THE PIPE BARREL OVER ITS ENTIRE LENGTH. AFTER THE PIPE IS ADJUSTED FOR LINE AND GRADE, AND THE JOINT IS MADE, THE CERTIFIED CLEAN BEDDING MATERIAL SHALL BE CAREFULLY PLACED AND TAMPED UNDER THE HAUNCHES OF THE PIPE AND IN THE PREVIOUSLY DUG BELL HOLES.

3 / C6 TYPICAL TRENCH SECTION

NO SCALE

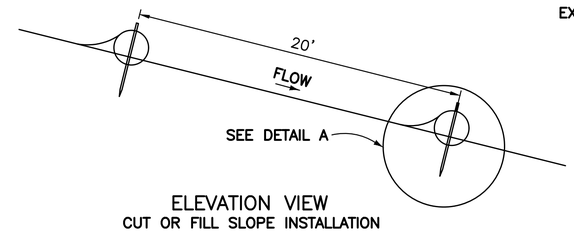

ELEVATION VIEW
CUT OR FILL SLOPE INSTALLATION

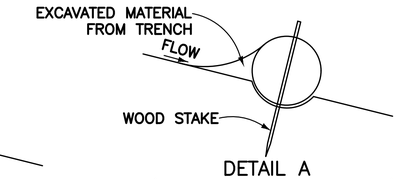

DETAIL A
(TYPICAL OF ALL INSTALLATIONS)

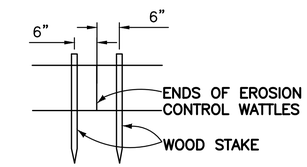

DETAIL B

GENERAL NOTES:

1. AT CUT OR FILL SLOPE INSTALLATIONS, WATTLES SHALL BE INSTALLED ALONG THE CONTOUR AND PERPENDICULAR TO THE WATER FLOW.
2. THE CONTRACTOR SHALL DIG A 3" TO 5" TRENCH, INSTALL THE WATTLE TIGHTLY IN THE TRENCH SO THAT DAYLIGHT CAN NOT BE SEEN UNDER THE WATTLE AND THEN COMPACT THE SOIL EXCAVATED FROM THE TRENCH AGAINST THE WATTLE ON THE UPHILL SIDE. SEE DETAIL A.
3. THE STAKES SHALL BE 1"X2" OR 2"X2" WOOD STAKES, HOWEVER, OTHER TYPES OF STAKES SUCH AS REBAR MAY BE USED ONLY IF APPROVED BY THE COR. THE STAKES SHALL BE PLACED 6" FROM THE ENDS OF THE WATTLES AND THE SPACING OF THE STAKES ALONG THE WATTLES SHALL BE 3' TO 4'.
4. WHERE INSTALLING RUNNING LENGTHS OF WATTLES, THE CONTRACTOR SHALL BUTT THE SECOND WATTLE TIGHTLY AGAINST THE FIRST AND SHALL NOT OVERLAP THE ENDS. SEE DETAIL B.
5. THE CONTRACTOR AND COR SHALL INSPECT THE EROSION CONTROL WATTLES ONCE EVERY WEEK AND WITHIN 24 HOURS AFTER EVERY RAINFALL EVENT GREATER THAN ½". THE CONTRACTOR SHALL REMOVE, DISPOSE, OR RESHAPE THE ACCUMULATED SEDIMENT WHEN NECESSARY AS DETERMINED BY THE ENGINEER.
6. SEDIMENT REMOVAL, DISPOSAL, OR NECESSARY SHAPING SHALL BE AS DIRECTED BY THE COR.

2 / C6 WATTLES DETAIL

NO SCALE

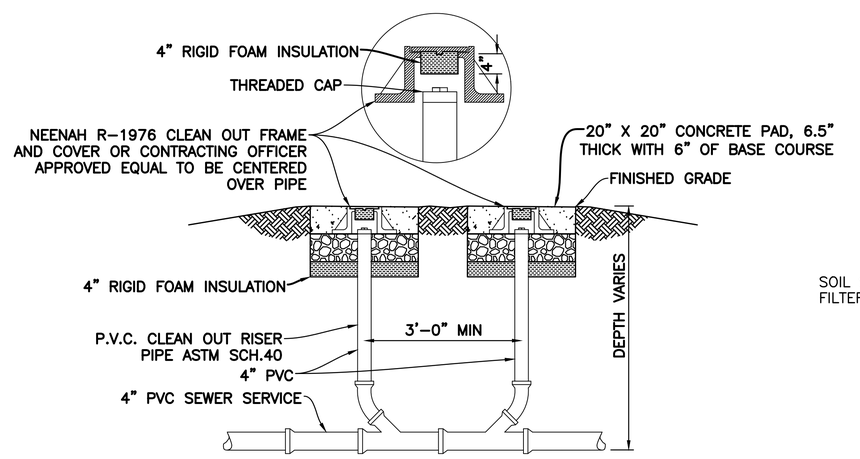

4 / C6 DOUBLE CLEANOUT DETAIL

NO SCALE

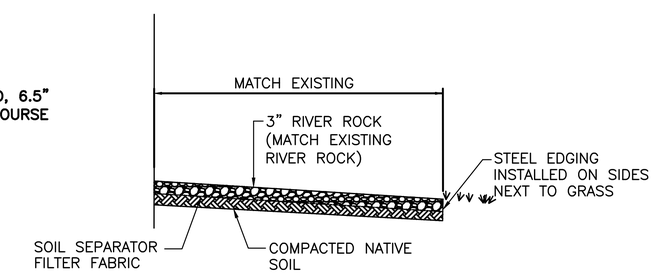

5 / C6 LANDSCAPE ROCK TYPICAL SECTION

NO SCALE

REGISTERED PROFESSIONAL ENGINEER
CHRISTOPHER M. BAILEY
PE-28356
DATE 4-17-26
NORTH DAKOTA

DESIGNED: L. SHAGLA CADD A. STRAHL TECH. REVIEW: C. BAILEY DATE: 04/17/2026	SUB SHEET NO. C6	TITLE OF SHEET CIVIL DETAILS KNIFE RIVER INDIAN VILLAGES N.H.S.	DRAWING NO. 80051 168 PMIS/PKG NO. 345002 SHEET 9 OF 22

4/16/2026 8:31 AM ASTRAHL R24 C:\pwworking\central02\d0168592\C6-10 Civil Details.dwg

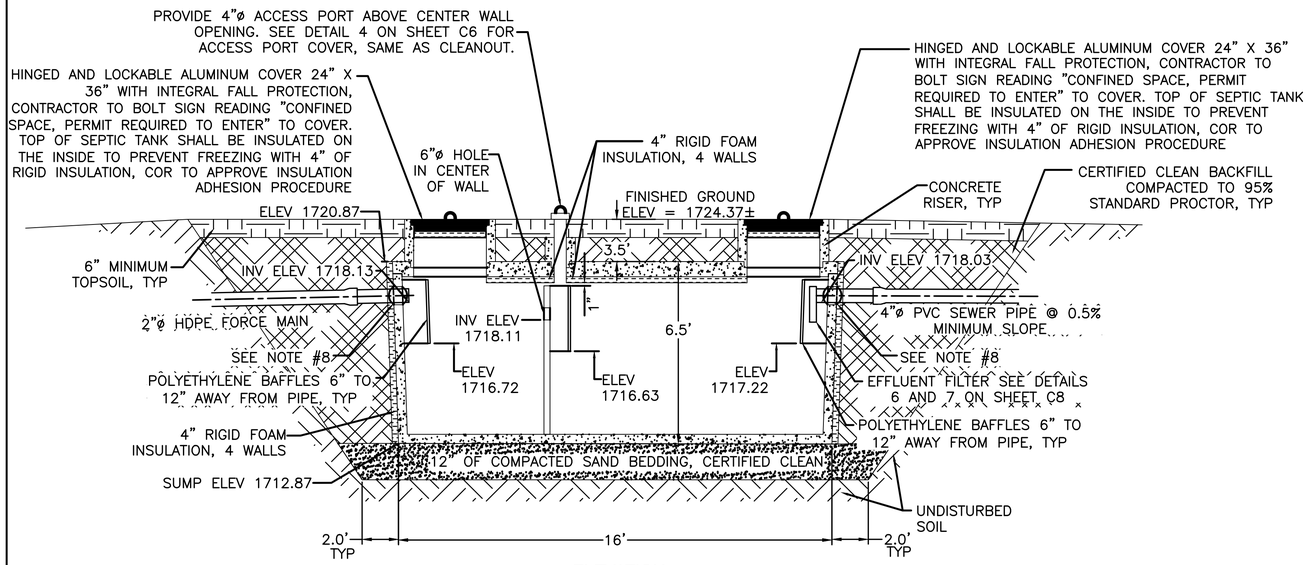

ELEVATION

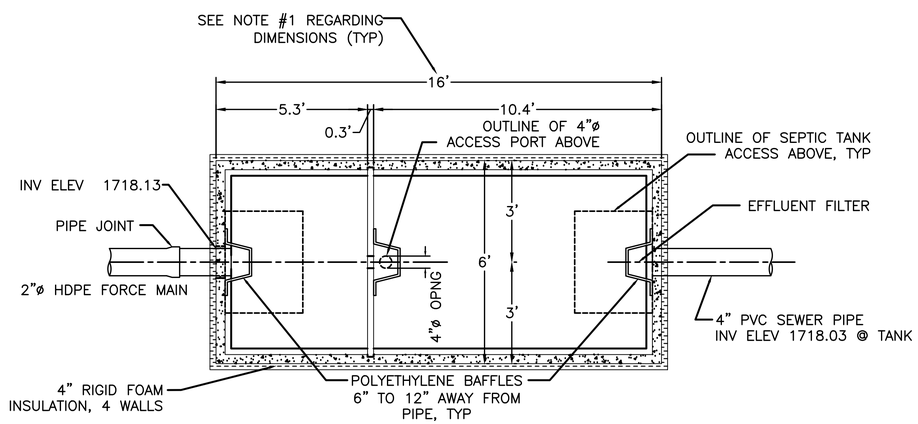

PLAN

5 / C7 SEPTIC TANK

NO SCALE

SEPTIC TANK NOTES:

1. SEPTIC TANK SHALL HAVE A MINIMUM STORAGE VOLUME OF 3,000 GALLONS. DIMENSIONS MAY DIFFER DEPENDING ON MANUFACTURER.
2. PROVIDE SEPTIC TANKS MEETING THE REQUIREMENTS OF ASTM C1227–13.
3. THE SEPTIC TANK, INCLUDING BAFFLES OR TEES, SHALL BE CONSTRUCTED OF MATERIALS RESISTANT TO ACID, DECAY, AND CORROSION.
4. TANKS SHALL BE CAPABLE OF SUPPORTING A STATIC VERTICAL LOAD OF AT LEAST 1000 POUNDS PER SQUARE FOOT WHEN BEDDED AND BACKFILLED TO THE TOP OF THE TANK.
5. CONCRETE SEPTIC TANKS SHALL BE CONSTRUCTED OF PORTLAND TYPE V SULFATE–RESISTANT CEMENT WITH A MINIMUM STRENGTH OF 4500 POUNDS PER SQUARE INCH.
6. THE WALLS AND COVERS OF CONCRETE SEPTIC TANKS SHALL BE AT LEAST 5" THICK AND THE BASE AT LEAST 8" THICK WITH REINFORCING BARS AND WELDED WIRE MESH.
7. HYDROSTATIC TESTING: CONTRACTOR SHALL SEAL THE TANK, FILL WITH WATER, AND LET STAND FOR 24 HOURS. THE TANK SHALL THEN BE REFILLED. THE TANK IS APPROVED IF WATER LEVEL IS HELD FOR 1 HOUR AFTER THE REFILL. IF THE TANK DOES NOT PASS THE HYDROSTATIC TEST, THE CONTRACTOR SHALL REPAIR THE TANK PER THE MANUFACTURER'S RECOMMENDATIONS AND RETEST. THE PROCEDURE SHALL BE REPEATED UNTIL THE TANK PASSES THE TEST.
8. PROVIDE WATERTIGHT SEAL WITH CORROSION RESISTANT NON–SHRINK GROUT, TYP ALL PIPE PENETRATIONS.

REGISTERED PROFESSIONAL ENGINEER
CHRISTOPHER M. BAILEY
PE-28356
DATE 4-17-26
NORTH DAKOTA

DESIGNED: L. SHAGLA	SUB SHEET NO.	TITLE OF SHEET	DRAWING NO.
CADD A. STRAHL	C7	CIVIL DETAILS	80051 168
TECH. REVIEW: C. BAILEY			PMIS/PKG NO. 345002
DATE: 04/17/2026		KNIFE RIVER INDIAN VILLAGES N.H.S.	SHEET 10 OF 22

4/16/2026 8:31 AM ASTRAHL R24 C:\pwworking\central02\d0168592\C6-10 Civil Details.dwg

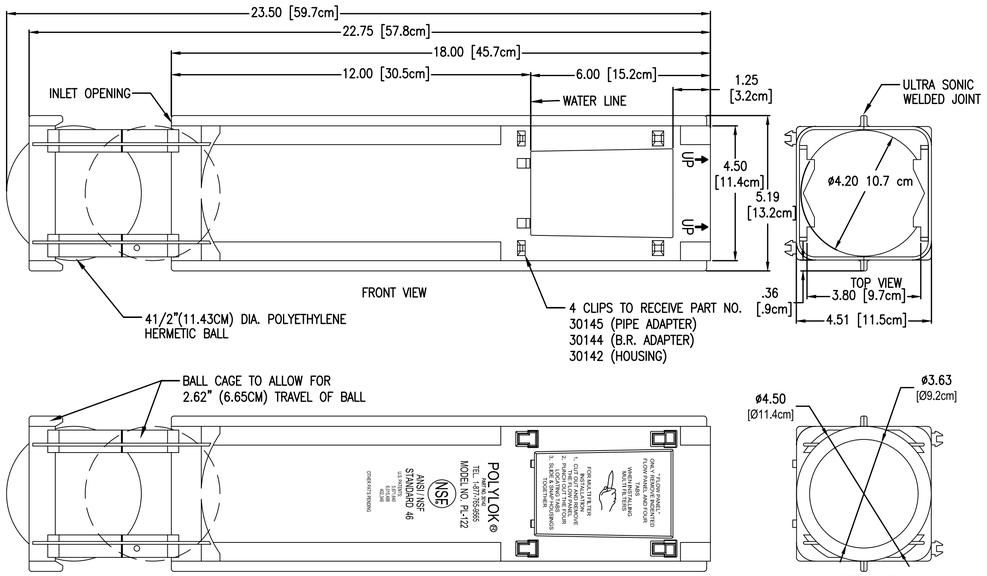

PL-122 HOUSING
PART NO. – 30142
MATERIAL – POLYPROPYLENE
COLOR – WHITE

6 C8 **EFFLUENT FILTER HOUSING**
NO SCALE

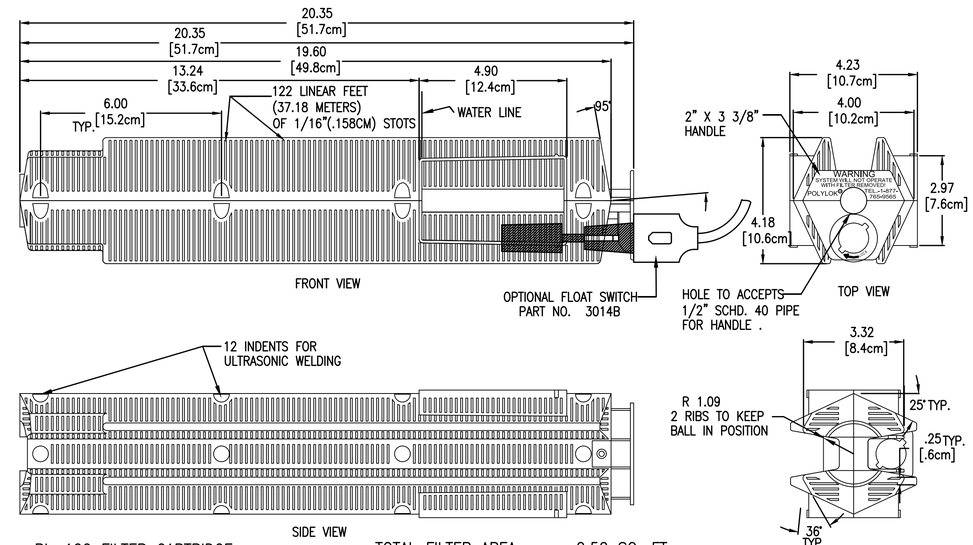

PL-122 FILTER CARTRIDGE
PART NO. – 30141
MATERIAL – POLYPROPYLENE
COLOR – BLUE

TOTAL FILTER AREA – 2.52 SQ. FT.
LINEAR FT. OF 1/16" SLOT – 122 FT
LINEAR METERS OF .158CM SLOTS – 37.18

7 C8 **EFFLUENT FILTER CARTRIDGE**
NO SCALE

NOTE:

EFFLUENT FILTER SHALL BE INSTALLED ON THE SEPTIC TANK EFFLUENT AND FILTER SHALL BE ACCESSIBLE FROM THE SEPTIC TANK ACCESS ABOVE TO ALLOW FOR FILTER CHANGES WITHOUT ENTERING THE TANK.

REGISTERED PROFESSIONAL ENGINEER
CHRISTOPHER M. BAILEY
PE-28356
DATE 4-17-26
NORTH DAKOTA

DESIGNED: L. SHAGLA	SUB SHEET NO.	TITLE OF SHEET	DRAWING NO.
CADD A. STRAHL	C8	CIVIL DETAILS	80051 168
TECH. REVIEW: C. BAILEY			PMIS/PKG NO. 345002
DATE: 04/17/2026		KNIFE RIVER INDIAN VILLAGES N.H.S.	SHEET 11 OF 22

4/16/2026 8:31 AM ASTRAHL R24 C:\pwworking\central02\d0168592\C6-10 Civil Details.dwg

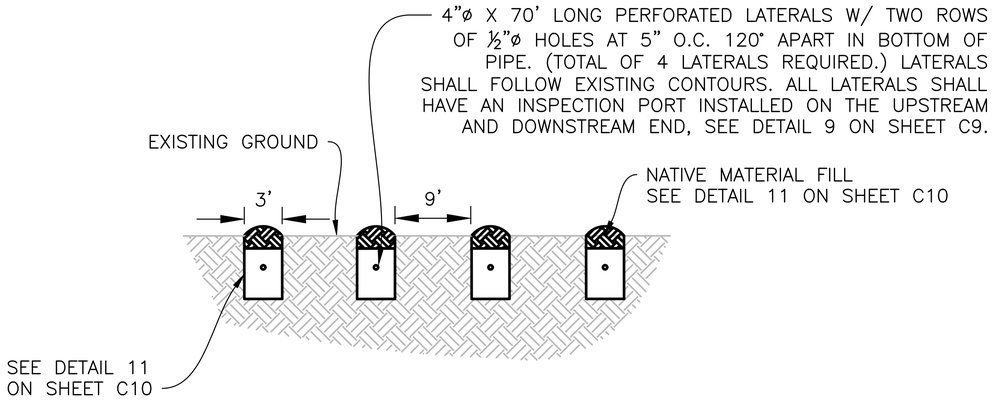

8 / C9 TYPICAL LATERAL TRENCH LAYOUT DETAIL
NO SCALE

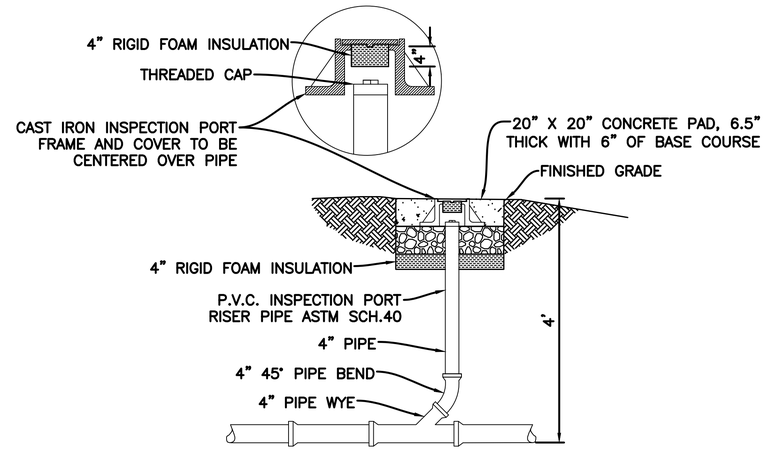

9 / C9 ABSORPTION TRENCH INSPECTION PORT
NO SCALE

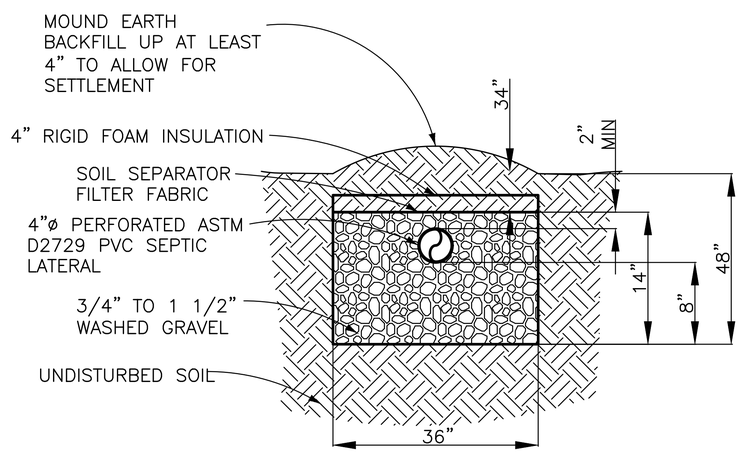

NOTES:

1. PROVIDE 9' OF UNDISTURBED SOIL BETWEEN THE TRENCHES.
2. ALL PIPING IS PVC, 4"ø PLACED AT 0% SLOPE.
3. TRENCH BOTTOM SHALL BE LEVEL.
4. TRENCH EXCAVATION SHALL BE MADE WITH BUCKET EQUIPMENT HAVING SIDE CUTTERS OR RAKE TOOTH.

10 / C9 TYPICAL LATERAL TRENCH DETAIL
NO SCALE

REGISTERED PROFESSIONAL ENGINEER
CHRISTOPHER M. BAILEY
PE-28356
DATE 4-17-26
NORTH DAKOTA

DESIGNED: L. SHAGLA CADD A. STRAHL TECH. REVIEW: C. BAILEY DATE: 04/17/2026	SUB SHEET NO. C9	TITLE OF SHEET CIVIL DETAILS KNIFE RIVER INDIAN VILLAGES N.H.S.	DRAWING NO. 80051 168 PMIS/PKG NO. 345002 SHEET 12 OF 22

4/16/2026 8:31 AM ASTRAHL R24 C:\pwworking\central02\d0168592\C6-10 Civil Details.dwg

TOP VIEW

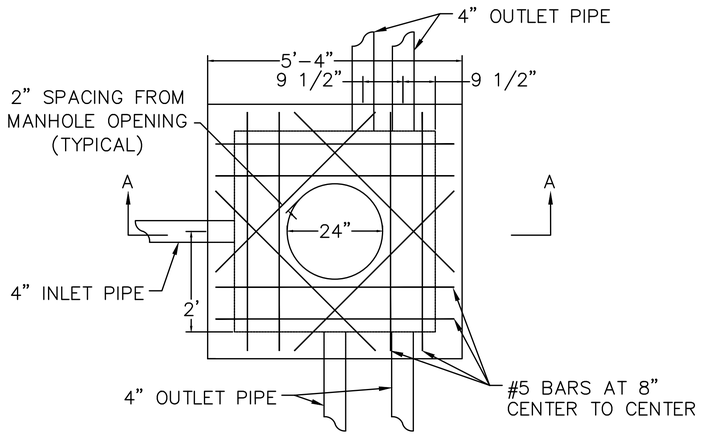

STRUCTURAL NOTES

1. ALL REINFORCING STEEL SHALL CONFORM TO A.S.T.M. A615, GRADE 60.
2. ALL REINFORCING STEEL SHALL BE CUT AND/OR BENT IN THE FIELD TO MAINTAIN A MINIMUM OF 2" COVER ON ALL REINFORCING STEEL.
3. NO VERTICAL CONSTRUCTION JOINTS ARE ALLOWED.
4. ALL CONCRETE SHALL BE CLASS M-6.
5. UNIT STRESSES:
   CONCRETE FC = 1600 P.S.I.
   REINFORCING STEEL FC = 20,000 P.S.I.
6. TOP OF MANHOLE COVER TO BE SET FLUSH WITH FINISHED SURFACE ELEVATION.

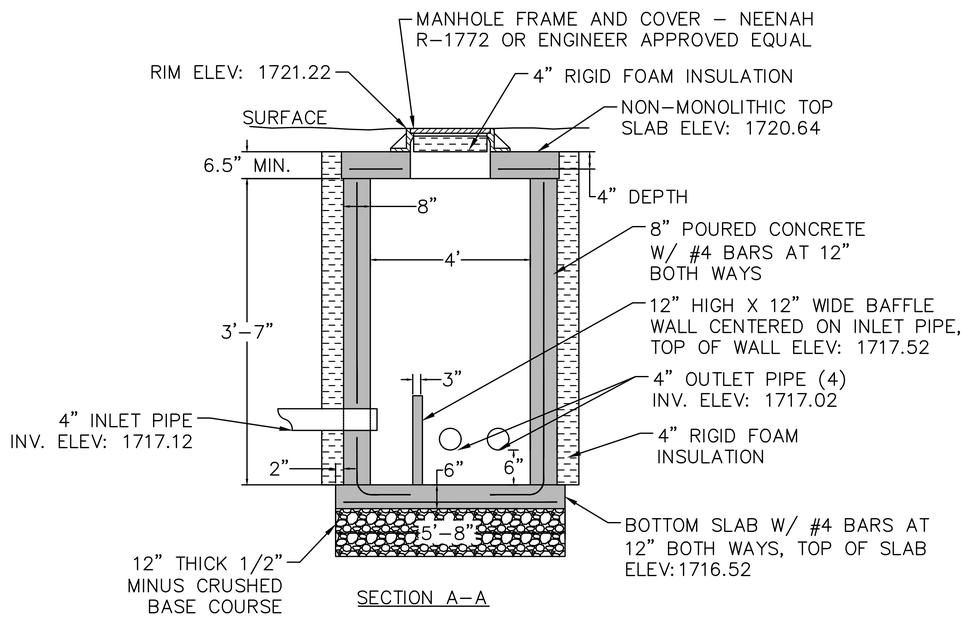

SECTION A-A

NOTES:

1. TOP SLAB STEEL REINFORCEMENT REQUIRES 12-#5 BARS 5' LONG TO BE PLACED AS SHOWN.
2. 2" FROM MANHOLE OPENING AND 8" CENTER TO CENTER AT A DEPTH OF 4" W/MIN. COVER THICKNESS OF 6".
3. FLOOR OF JUNCTION BOX TO BE FINISHED IN SUCH A MANNER TO INSURE UNINTERRUPTED FLOW THRU THE BOX.

11 / C10 SQUARE DIVERSION STRUCTURE
NO SCALE

REGISTERED PROFESSIONAL ENGINEER
CHRISTOPHER M. BAILEY
PE-28356
DATE 4-17-26
NORTH DAKOTA

DESIGNED: L. SHAGLA	SUB SHEET NO.	TITLE OF SHEET	DRAWING NO. 80051 168
CADD A. STRAHL	C10	CIVIL DETAILS	PMIS/PKG NO. 345002
TECH. REVIEW: C. BAILEY		KNIFE RIVER INDIAN VILLAGES N.H.S.	SHEET 13 OF 22
DATE: 04/17/2026			

4/17/2026 12:59 PM ASTRAHL R24 C:\pwworking\central02\d0168592\C6-10 Civil Details.dwg

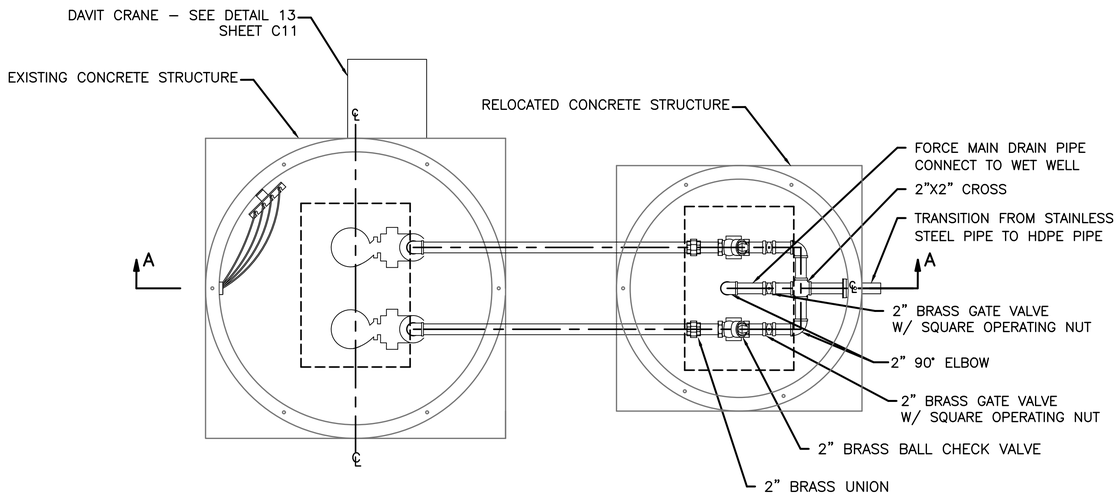

PLAN

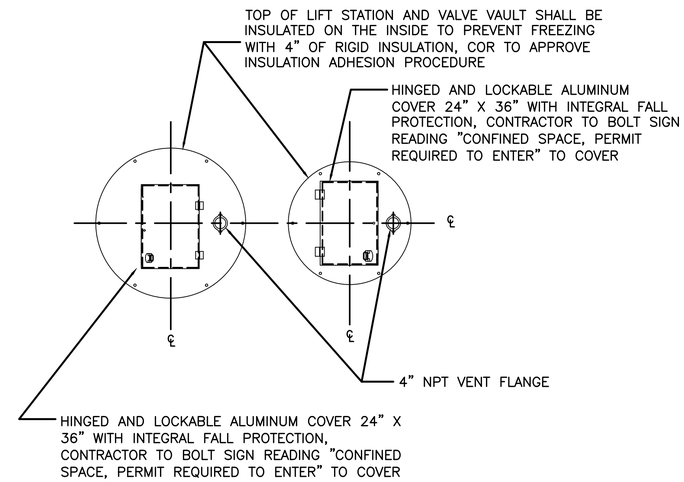

PLAN COVER

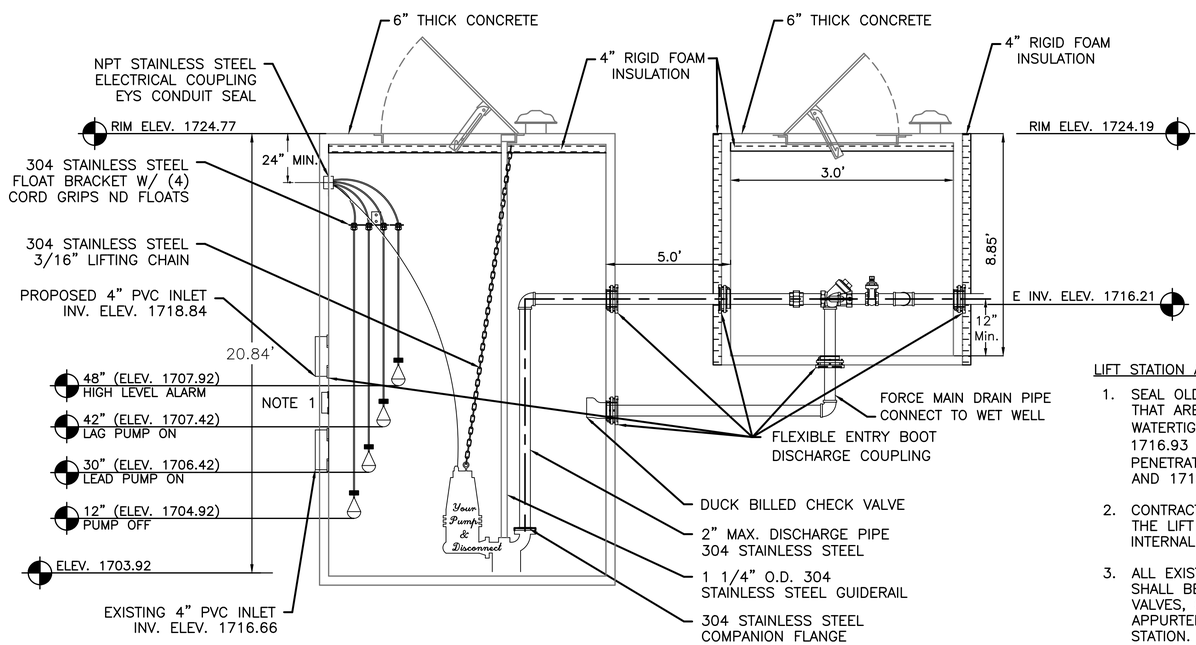

SECTION A–A

12 / C11 REHABILITATED LIFT STATION AND VALVE VAULT PLAN

NO SCALE

LIFT STATION AND VALVE VAULT NOTES:

1. SEAL OLD PENETRATIONS IN THE LIFT STATION AND VALVE VAULT THAT ARE NO LONGER USED IN THE NEW CONFIGURATION WATERTIGHT. TWO 2" PENETRATIONS AT INVERTS 1716.90 AND 1716.93 ON THE LIFT STATION. FOR THE VALVE VAULT, ONE 2" PENETRATION AT 1716.95 AND TWO 3" PENETRATIONS AT 1716.76 AND 1716.79.
2. CONTRACTOR SHALL PUMP AND DISPOSE OF ANY WASTEWATER IN THE LIFT STATION PRIOR TO CLEANING AND REWORKING THE INTERNAL COMPONENTS.
3. ALL EXISTING LIFT STATION AND VALVE VAULT INTERIOR COMPONENTS SHALL BE REMOVED AND REPLACED INCLUDING PUMPS, PIPING, VALVES, GUIDE RAILS, LIFTING CHAINS, FLOATS, AND ANY OTHER APPURTENANCES NECESSARY TO REINSTATE A FULLY FUNCTION LIFT STATION.
4. NEW PENETRATIONS SHALL BE CORE DRILLED AT THE ELEVATIONS CALLED OUT IN THE PLANS AND HAVE A WATERTIGHT BOOT INSTALLED FOR THE PIPE CONNECTIONS.
5. LIFT STATION CONTROL PANEL SHALL HAVE AUDIBLE AND VISUAL ALARMS.
6. CONTRACTOR SHALL REPAIR ANY DAMAGE TO THE RELOCATED VALVE VAULT AND REHABILITATED LIFT STATION TO THE SATISFACTION OF THE COR.

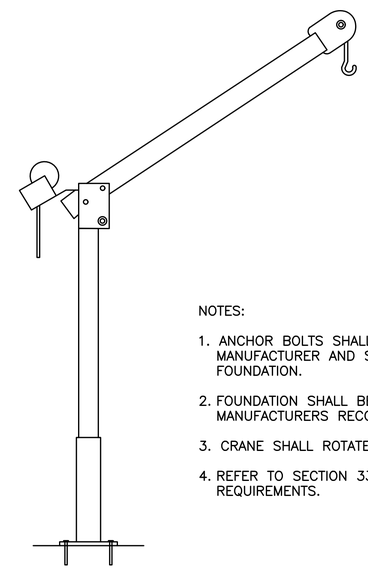

NOTES:

1. ANCHOR BOLTS SHALL BE FURNISHED BY THE CRANE MANUFACTURER AND SHALL BE CAST INTO THE FOUNDATION.
2. FOUNDATION SHALL BE DESIGNED AND INSTALLED PER MANUFACTURERS RECOMMENDATIONS.
3. CRANE SHALL ROTATE 360° AND HAVE A FIXED BASE.
4. REFER TO SECTION 33 32 13 FOR ADDITIONAL REQUIREMENTS.

13 / C11 DAVIT CRANE DETAIL

NO SCALE

REGISTERED PROFESSIONAL ENGINEER CHRISTOPHER M. BAILEY PE-28356 DATE 4-17-26 NORTH DAKOTA

DESIGNED: L. SHAGLA	SUB SHEET NO.	TITLE OF SHEET	DRAWING NO. 80051 168
CADD A. STRAHL	C11	CIVIL DETAILS	PMIS/PKG NO. 345002
TECH. REVIEW: C. BAILEY		KNIFE RIVER INDIAN VILLAGES N.H.S.	SHEET 14 OF 22
DATE: 04/17/2026			

4/16/2026 8:31 AM ASTRAHL R24 C:\pwworking\central02\d0168592\C6-10 Civil Details.dwg

PLUMBING SYMBOLS AND ABBREVIATIONS

ABBR.	SYMBOL	REMARKS
CW		DOMESTIC COLD WATER
HW		DOMESTIC HOT WATER
HWC		DOMESTIC HOT WATER RECIRCULATING
	TEMP	DOMESTIC HOT WATER (TEMP = WATER TEMPERATURE)
	TEMP	DOMESTIC HOT WATER RECIRCULATING (TEMP = WATER TEMPERATURE)
NPW	NPW	NON POTABLE WATER (SEE PLANS FOR WATER SYSTEM TYPE)
SCW	SCW	DOMESTIC SOFT COLD WATER
DI	DI	DEIONIZED WATER
DIC	DIC	DEIONIZED WATER RECIRCULATING
RO	RO	REVERSE OSMOSIS
ROC	ROC	REVERSE OSMOSIS RECIRCULATING
DW	DW	DISTILLED WATER
AWS	AWS	ANIMAL WATERING SYSTEM
SS	SS	SOIL OR WASTE (BELOW FLOOR/BELOW GRADE)
SS	SS	SOIL OR WASTE PIPE (INSIDE BUILDING)
AW	AW	ACID WASTE (BELOW FLOOR)
AW	AW	ACID WASTE
AV	AV	ACID VENT
V	V	VENT PIPING
RD	RD	ROOF DRAIN ABOVE FLOOR
RD	RD	ROOF DRAIN (BELOW FLOOR/GRADE)
ERD	ERD	EMERGENCY ROOF DRAIN ABOVE FLOOR
ERD	ERD	EMERGENCY ROOF DRAIN (BELOW FLOOR/GRADE)
DT	DT	DRAIN TILE
PDP	PDP	PRESSURE DRAINAGE PIPING
F	F	FIRE PROTECTION PIPING
D	D	DRAIN PIPING
FOS	FOS	FUEL OIL SUPPLY
FOR	FOR	FUEL OIL RETURN
FOF	FOF	FUEL OIL FILL
FOV	FOV	FUEL OIL VENT
CA	CA	COMPRESSED AIR
G	G(X)	NATURAL GAS (X)=PSI OR INCHES OF WATER COLUMN

PLUMBING SYMBOLS AND ABBREVIATIONS

ABBR.	2-LINE SYMBOL TOP VIEW	2-LINE SYMBOL SIDE VIEW	1-LINE SYMBOL	REMARKS
ISV				ISOLATION VALVE (BALL/BUTTERFLY/GATE - SEE SPECIFICATIONS)
BLV				BALL VALVE
BTV				BUTTERFLY VALVE
GTV				GATE VALVE
GLV				GLOBE VALVE
PLV				PLUG VALVE
CHV				CHECK VALVE (ARROW INDICATES DIRECTION OF FLOW)
			VB	VACUUM BREAKER (ARROW INDICATES DIRECTION OF FLOW)
				HOSE END CONNECTION
				MANUAL BALANCING VALVE
PRV				PRESSURE REDUCING VALVE
				FLOW MEASURING DEVICE
				(FLANGED/SCREWED) PIPE UNION OR FLANGE
				STRAINER
				PRESSURE RELIEF VALVE
				THERMOMETER
				PRESSURE GAUGE WITH GAUGE COCK
				ARROW INDICATES DOWNWARD PITCH OF PIPE
				ARROW INDICATES DIRECTION OF FLOW
				PIPE ECCENTRIC REDUCER
				PIPE CONCENTRIC REDUCER
				CAPPED END
				PIPE ELBOW UP
				PIPE ELBOW DOWN
				PIPE TEE UP
				PIPE TEE DOWN
				FLEXIBLE CONNECTOR
			EJ	EXPANSION JOINT
				AUTOMATIC BALANCING VALVE
				THERMOSTATIC EXPANSION VALVE
				WATER HAMMER ARRESTOR
				SOLENOID VALVE
				PIPE ALIGNMENT GUIDE
				PIPE ANCHOR
CO			CO	CLEAN-OUT
FCO			FCO	FLOOR CLEAN-OUT
OS&Y				OUTSIDE SCREW AND YOKE VALVE
			F	WATER FLOW DETECTOR
			T	TAMPER DETECTOR
			M	WATER METER
				BALL CHECK OR DRIP VALVE
BFP			BFP	BACKFLOW PREVENTER
				WALL TYPE POST INDICATOR ASSEMBLY
FDC				FIRE DEPARTMENT (SIAMESE) CONNECTION
FDV				FIRE DEPARTMENT VALVE
PIV				POST-INDICATOR VALVE
FS			* FS- *	FLOOR SINK - (* SIZE) FS- (* TYPE)
FD			* FD- *	FLOOR DRAIN - (* SIZE) FD- (* TYPE)
AD			* AD- *	AREA DRAIN - (* SIZE) AD- (* TYPE)
RD			* RD- *	ROOF DRAIN - (* SIZE) RD- (* TYPE)
ERD			* ERD- *	EMERGENCY ROOF DRAIN - (* SIZE) ERD- (* TYPE)
WH			WH- *	WALL HYDRANT - WH-(* TYPE)
YH			YH- *	YARD HYDRANT - YH-(* TYPE)
HB			HB- *	HOSE BIBB - HB-(* TYPE)

PLUMBING ABBREVIATIONS

ABBR.	REMARKS	ABBR.	REMARKS
ACH	AIR CHANGES/HOUR	LWT	LEAVING WATER TEMPERATURE
ADJ	ADJUSTABLE	MAX	MAXIMUM
AFF	ABOVE FINISHED FLOOR	MBH	THOUSANDS BTU/HR
ALT	ALTERNATE	MCC	MOTOR CONTROL CENTER
AP	ACCESS PANEL	MFR	MANUFACTURER
APD	AIR PRESSURE DROP	MISC	MISCELLANEOUS
AVG	AVERAGE	MIN	MINUTE(S), MINIMUM
BMS	BUILDING MANAGEMENT SYSTEM	MTD	MOUNTED
BDD	GRAVITY BACKDRAFT DAMPER	NC	NORMALLY CLOSED, NOISE CRITERIA
BHP	BRAKE HORSE POWER	NO	NORMALLY OPEN, NUMBER
BTUH	BRITISH THERMAL UNITS PER HOUR	NR	NOISE REDUCTION
CAP	CAPACITY	NRC	NOISE REDUCTION COEFFICIENT
CFH	CUBIC FEET PER HOUR	NTS	NOT TO SCALE
CFM	CUBIC FEET PER MINUTE	OD	OUTSIDE DIAMETER, OVERFLOW STORM DRAIN
CI	CAST IRON	OS&Y	OUTSIDE SCREW AND YOKE VALVE
CLG	CEILING, COOLING	PD	PRESSURE DROP
COND	CONDENSER, CONDENSATE	PH	PHASE
CONN	CONNECTION	PLBG	PLUMBING
DB	DRY BULB	PSI	POUND(S) PER SQUARE INCH
dB	DECIBEL(S)	PSIA	POUND(S) PER SQUARE INCH ABSOLUTE
DDC	DIRECT DIGITAL CONTROL	PSIG	POUND(S) PER SQUARE INCH GAGE
DIA	DIAMETER	QTY	QUANTITY
DFU	DRAINAGE FIXTURE UNITS	REQD	REQUIRED
DN	DOWN	RH	RELATIVE HUMIDITY
DX	DIRECT EXPANSION	RL	REFRIGERANT LIQUID
EAT	ENTERING AIR TEMPERATURE	RPM	REVOLUTIONS PER MINUTE
EFF	EFFICIENCY	RM	ROOM
EMCS	ENERGY MANAGEMENT AND CONTROL SYSTEM	RS	REFRIGERANT SUCTION
ESP	EXTERNAL STATIC PRESSURE	SAT	SATURATION
EWT	ENTERING WATER TEMPERATURE	SCFM	STANDARD CUBIC FEET PER MINUTE
EXH	EXHAUST	SHT	SHEET
EXST	EXISTING	SIM	SIMILAR
F	FAHRENHEIT	SP	SUMP PUMP, STATIC PRESSURE
FL	FLOOR	SQ	SQUARE
FLA	FULL LOAD AMPS	TD	TEMPERATURE DIFFERENTIAL
FLEX	FLEXIBLE	TEMP	TEMPERATURE
FPM	FEET PER MINUTE	TSP	TOTAL STATIC PRESSURE
FUT	FUTURE	TYP	TYPICAL
FXTR	FIXTURE	UNO	UNLESS NOTED OTHERWISE
GAL	GALLON(S)	V	VOLT(S)
GPH	GALLON(S) PER HOUR	VAV	VARIABLE AIR VOLUME
GPM	GALLON(S) PER MINUTE	VB	VACUUM BREAKER
HG	HOT GAS	VEL	VELOCITY
HP	HORSEPOWER	VFD	VARIABLE FREQUENCY DRIVE
HR	HOUR	VTR	VENT THRU ROOF
HTG	HEATING	W	WATT(S)
HVAC	HEATING, VENTILATING, & AIR CONDITIONING	WC	WATER COLUMN
HZ	HERTZ	WB	WET BULB
ID	INSIDE DIAMETER	WG	WATER GAUGE
IE	INVERT ELEVATION	WPD	WATER PRESSURE DROP
IN	INCH(ES)	WSFU	WATER SUPPLY FIXTURE UNITS
I/O	INPUT/OUTPUT	WCO	WALL CLEANOUT
KW	KILOWATT(S)		
LAT	LEAVING AIR TEMPERATURE		
#	POUNDS		
LBS	POUNDS		
LF	LINEAR FOOT, LINEAR FEET		

NOT ALL SYSTEMS AND/OR SYMBOLS SHOWN ABOVE MAY BE USED IN PROJECT

REGISTERED PROFESSIONAL ENGINEER
JEFFREY A. LEWIS
PE-9245
DATE 4/17/2026
NORTH DAKOTA

DESIGNED: M. OBST	SUB SHEET NO.	TITLE OF SHEET
CADD: M. OBST	P0	PLUMBING SYMBOLS AND ABBREVIATIONS
TECH. REVIEW: J. LEWIS		KNIFE RIVER INDIAN VILLAGES N.H.S.
DATE: 04/17/2026		

DRAWING NO. 80051 / 168
PMIS/PKG NO. 345002
SHEET 15 OF 22

4/16/2026 10:20:39 AM

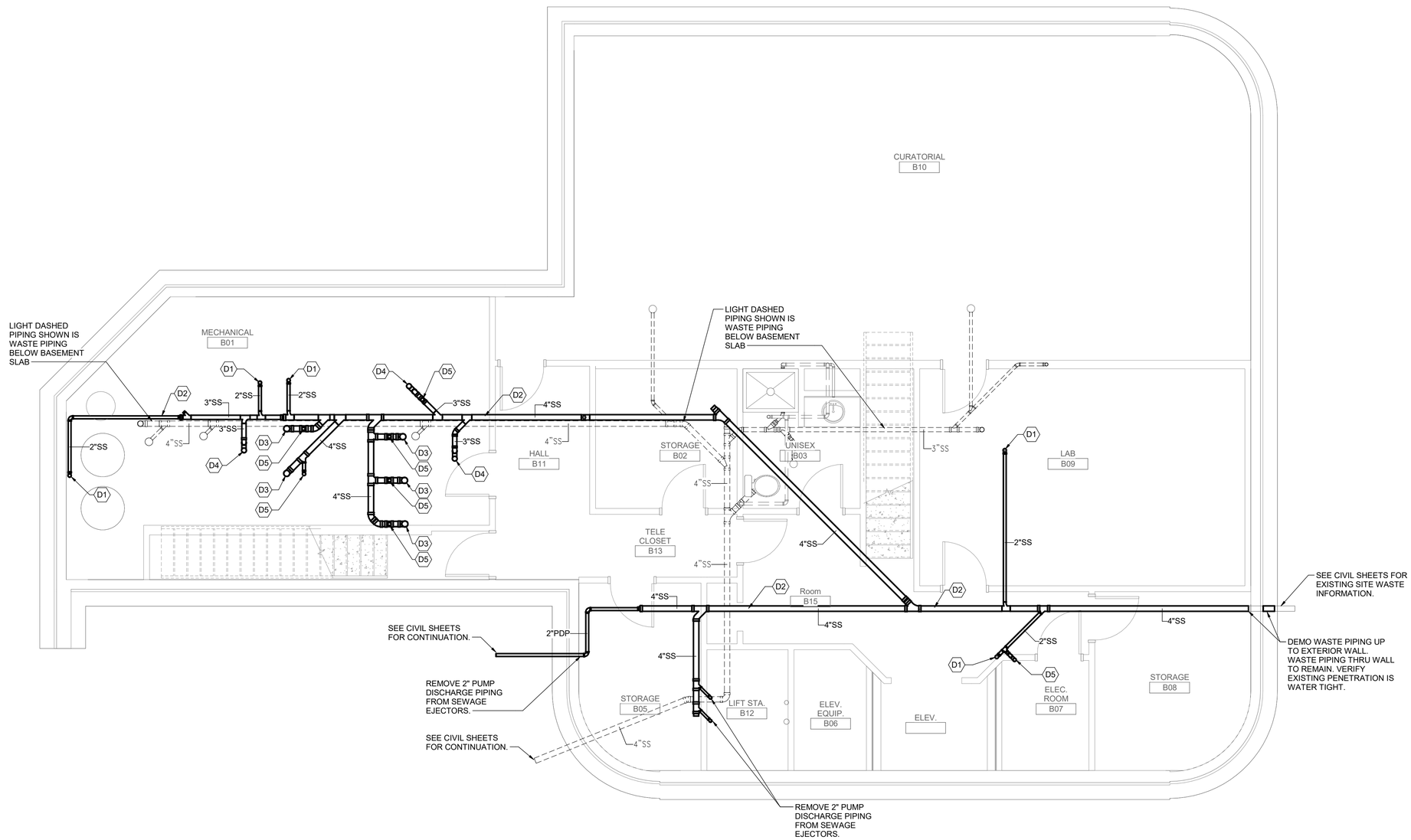

GENERAL PLUMBING DEMOLITION NOTES	
A	EXISTING PLUMBING WORK IS INDICATED BY BEING SHOWN LIGHT.
B	DEMOLITION PLUMBING WORK IS INDICATED BY BEING SHOWN BOLD.
C	CUTTING AND DEMOLITION SHALL BE DONE BY METHOD WHICH WILL NOT JEOPARDIZE STRUCTURAL INTEGRITY OF THE EXISTING CONSTRUCTION AND WHICH WILL NOT DAMAGE PORTIONS TO REMAIN. RELOCATE/ADJUST EXISTING MECHANICAL AND PLUMBING WORK AS REQUIRED TO ACCOMMODATE NEW & DEMOLITION WORK AT NO ADDITIONAL COST TO THE OWNER.
D	EXISTING CONDITIONS ARE BASED ON RECORD DRAWINGS PROVIDED BY NPS AND LIMITED FIELD VERIFICATION. CONTRACTOR SHALL VISIT SITE PRIOR TO SUBMISSION OF BIDS TO REVIEW SCOPE OF WORK, DEMOLITION, AND ALL DETAILS.
E	THE CONTRACTOR SHALL ORGANIZE CONSTRUCTION IN SUCH A MANNER THAT THERE IS NO INTERRUPTION TO FACILTY OPERATION. MASONRY DRILLING, DUST, OBSTRUCTION OF VEHICULAR OR PEDESTRIAN TRAFFIC, ETC. SHALL BE CONSTRUED AS INTERRUPTION OF FACILTY OPERATION. PROVIDE ADEQUATE NOTICE PRIOR TO ANY SHUT DOWN OR DISTURBANCE OF SPACE.
F	PATCH AND REPAIR ANY DAMAGE TO WALLS, FLOORS, CEILINGS, CABINETS, HARDWARE, WINDOWS, FIXTURES ETC., AS A RESULT OF THE CONSTRUCTION PROCESS OR WHICH MAY BE EXISTING CONDITIONS. MATCH EXISTING CONDITIONS AS CLOSELY AS POSSIBLE UNLESS NOTED OTHERWISE. RESULTANT CONDITIONS OF PATCHED AND REPAIRS TO BE LIKE NEW.
G	IN GENERAL, THE OWNER RESERVES THE RIGHT TO RETAIN ALL MATERIALS AND EQUIPMENT REMOVED FROM THE PROJECT, ANY ITEMS OF MATERIALS NOT DESIRED BY THE OWNER SHALL BE REMOVED FROM THE OWNER'S PROPERTY BY THE CONTRACTOR AT THE CONTRACTOR'S EXPENSE.
H	COORDINATE METHOD, ROUTE, AND TIMING OF DEBRIS REMOVAL WITH THE OWNER PRIOR TO ANY REMOVAL.
I	WHERE EXISTING UTILITIES NOT SHOWN ON THE DRAWINGS ARE ENCOUNTERED, SUPPORT AND PROTECT THESE UTILITIES AND IMMEDIATELY NOTIFY THE OWNER SO THAT PROVISIONS CAN BE MADE FOR RELOCATION IF REQUIRED.
J	PIPING SHOWN IN BOLD LINES IS IN THE BASEMENT CEILING SPACE BETWEEN THE BASEMENT AND FIRST FLOOR.

DEMO PLUMBING KEYNOTES	
D1	EXISTING 2"SS THRU FIRST LEVEL SLAB TO REMAIN.
D2	REMOVE MAIN WASTE PIPING. PIPE HANGERS CAN REMAIN IF IN GOOD CONDITION AND CAN BE ADJUSTED FOR NEW WASTE PIPING.
D3	EXISTING 4"SS THRU FIRST LEVEL SLAB TO REMAIN.
D4	EXISTING 3"SS THRU FIRST LEVEL SLAB TO REMAIN.
D5	EXISTING 2"V THRU FIRST LEVEL SLAB TO REMAIN.

REGISTERED PROFESSIONAL ENGINEER
JEFFREY A. LEWIS
PE-9245
DATE 4/17/2026
NORTH DAKOTA

4 0 4 8
SCALE OF FEET

1/4" = 1'-0"

DESIGNED:	SUB SHEET NO.	TITLE OF SHEET	DRAWING NO.
M. OBST	P1	FIRST FLOOR WASTE AND VENT DEMO PLAN	80051 168
DRAWN: M. OBST			PMIS/PKG NO. 345002
TECH. REVIEW: J. LEWIS		KNIFE RIVER INDIAN VILLAGES N.H.S.	SHEET 16 OF 22
DATE: 04/17/2026			

4/16/2026 10:20:46 AM

GENERAL PLUMBING NOTES	
A	EXISTING PLUMBING WORK IS INDICATED BY BEING SHOWN LIGHT.
B	NEW PLUMBING WORK IS INDICATED BY BEING SHOWN BOLD.
C	CONTRACTOR IS TO COORDINATE ALL WORK OF ALL TRADES AND COORDINATE WORKING TIME AND METHODS WITH THE OWNER TO INSURE THAT THE MINIMUM DISTURBANCE TO FACILTY FUNCTION WILL OCCUR.
D	THE CONTRACTOR SHALL ORGANIZE CONSTRUCTION IN SUCH A MANNER THAT THERE IS MINIMAL INTERRUPTION TO FACILTY OPERATION. MASONRY DRILLING, DUST, OBSTRUCTION OF VEHICULAR OR PEDESTRIAN TRAFFIC, ETC. SHALL BE CONSTRUED AS INTERRUPTION OF FACILTY OPERATION. PROVIDE ADEQUATE NOTICE PRIOR TO ANY SHUT DOWN OR DISTURBANCE OF SPACE.
E	CLEANOUTS SHOWN ON PLANS ARE LOCATED IN CEILING SPACE. ACCESS TO THESE CLEANOUTS IS REQUIRED.
F	PIPING SHOWN IN BOLD LINES IS IN THE BASEMENT CEILING SPACE BETWEEN THE BASEMENT AND FIRST FLOOR.

NEW PLUMBING KEYNOTES	
P1	CONNECT TO EXISTING 2"SS BELOW FIRST LEVEL SLAB.
P2	MAIN WASTE PIPING CAN REUSE EXISTING HANGERS WHERE POSSIBLE. HANGERS WILL NEED TO BE ADJUSTED TO PROVIDE A MINIMUM OF A 1/8" PER FOOT SLOPE. CONSTRUCT SLOPE GREATER THAN 1/8" WHEREVER POSSIBLE.
P3	CONNECT TO EXISTING 4"SS BELOW FIRST LEVEL SLAB.
P4	CONNECT TO EXISTING 3"SS BELOW FIRST LEVEL SLAB. PROVIDE NEW 3" P-TRAP.
P5	CONNECT TO EXISTING 2"V BELOW FIRST LEVEL SLAB.
P6	CONNECT TO EXISTING 2"SS BELOW FIRST LEVEL SLAB. PROVIDE NEW 2" P-TRAP.
P7	PROVIDE A 3" SANITARY WYE ROLLED UP AT A 45 DEGREE ANGLE AND PROVIDE A PLUG. WYE SHOULD BE LOCATED IN AN ACCESSIBLE LOCATION.
P8	CONTRACTOR SHALL INSTALL PIPING AS HIGH AS POSSIBLE. PIPING SHALL CONTINUOUSLY SLOPE FROM THIS POINT TO THE BUILDING EXIT MAINTAINING A MINIMUM OF AN 1/8" SLOPE. SLOPE GREATER THAN 1/8" IS PREFERRED.

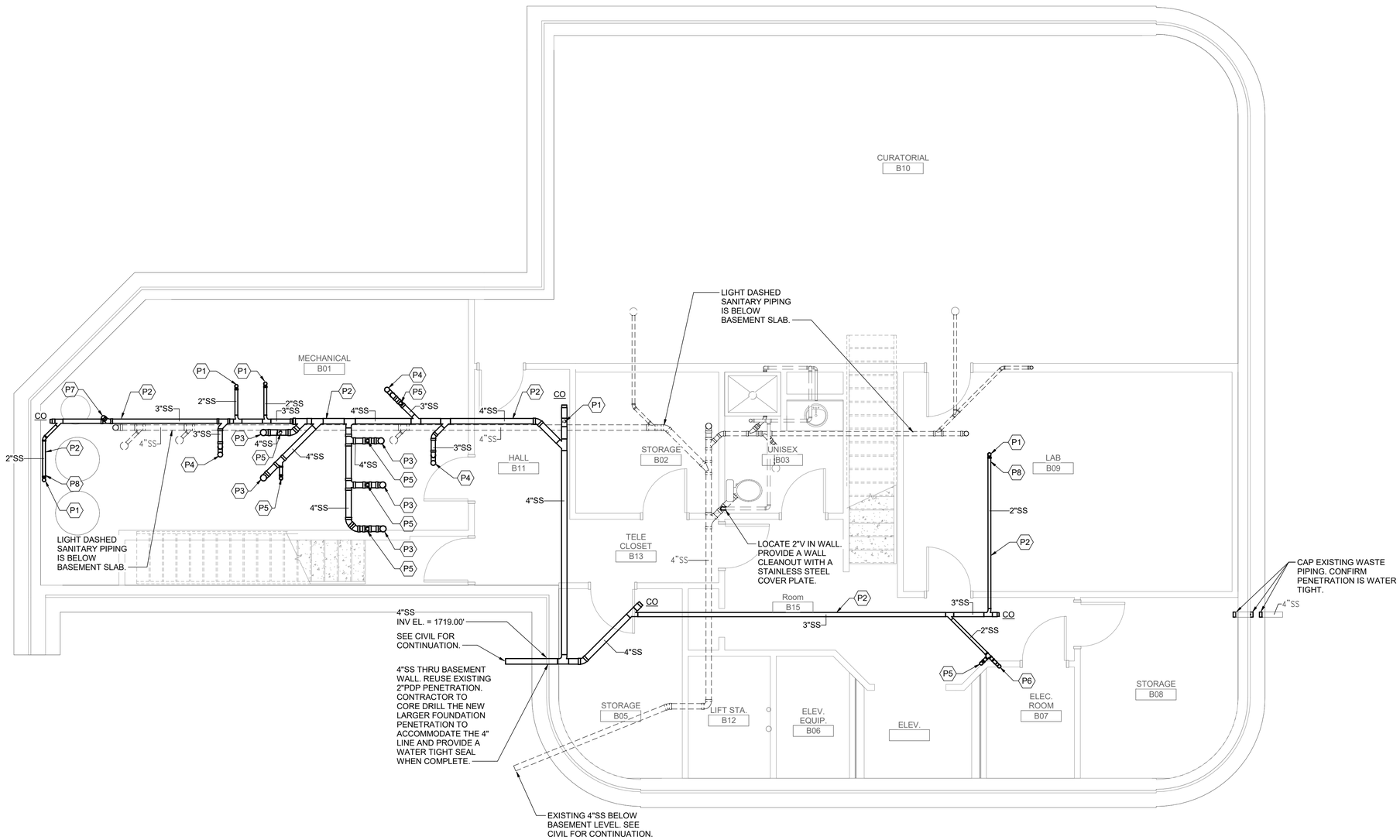

REGISTERED PROFESSIONAL ENGINEER
JEFFREY A. LEWIS
PE-9245
DATE 4/17/2026
NORTH DAKOTA

4 0 4 8
SCALE OF FEET

1/4" = 1'-0"

DESIGNED:	SUB SHEET NO.	TITLE OF SHEET	DRAWING NO.
M. OBST	P2	FIRST FLOOR WASTE AND VENT NEW PLAN	80051 168
CADD: M. OBST			PMIS/PKG NO. 345002
TECH. REVIEW: J. LEWIS		KNIFE RIVER INDIAN VILLAGES N.H.S.	SHEET 17 OF 22
DATE: 04/17/2026			

4/16/2026 10:20:53 AM

NEW PLUMBING KEYNOTES	
P1	CONNECT TO EXISTING 2"SS BELOW FIRST LEVEL SLAB.
P3	CONNECT TO EXISTING 4"SS BELOW FIRST LEVEL SLAB.
P4	CONNECT TO EXISTING 3"SS BELOW FIRST LEVEL SLAB. PROVIDE NEW 3" P-TRAP.
P5	CONNECT TO EXISTING 2"V BELOW FIRST LEVEL SLAB.
P6	CONNECT TO EXISTING 2"SS BELOW FIRST LEVEL SLAB. PROVIDE NEW 2" P-TRAP.

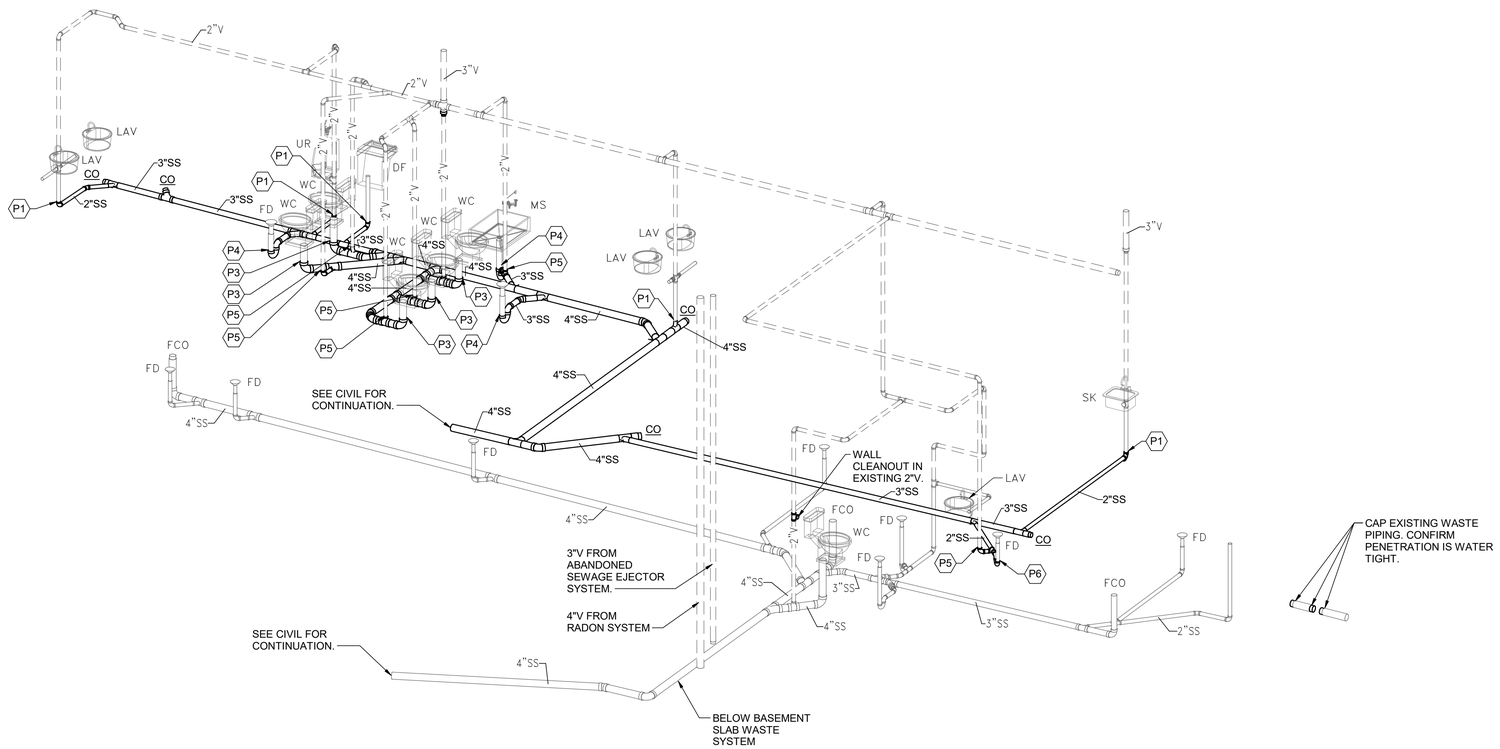

WASTE AND VENT DIAGRAM

NOT TO SCALE

REGISTERED PROFESSIONAL ENGINEER
JEFFREY A. LEWIS
PE-9245
DATE 4/17/2026
NORTH DAKOTA

DESIGNED:	SUB SHEET NO.	TITLE OF SHEET	DRAWING NO.
M. OBST	P3	PLUMBING DIAGRAMS	80051 / 168
CADD: M. OBST			PMIS/PKG NO. 345002
TECH. REVIEW: J. LEWIS		KNIFE RIVER INDIAN VILLAGES N.H.S.	SHEET 18 OF 22
DATE: 04/17/2026			

4/16/2026 10:21:00 AM

ONE-LINE, POWER, AND LIGHTING SYMBOLOGY

X 20A 3P OR X 100AF 80AT 3P

LOW VOLTAGE CIRCUIT BREAKER (CB). RATING AND NO. OF POLES AS SHOWN. WHEN SPECIFIC TYPE, OTHER THAN MCCB, IS REQUIRED, X INDICATES TYPE.

TYPES:
- MCCB - MOLDED CASE
- ICCB - INSULATED CASE
- LVP - LOW VOLTAGE POWER
- MCP - MOTOR CIRCUIT PROTECTOR (RATING PER CONNECTED LOAD)

TRIP UNIT:
- L - LONG TIME PICKUP
- S - SHORT TIME PICKUP
- I - INSTANTANEOUS PICKUP
- G - GROUND FAULT PICKUP
- A - ARC ENERGY REDUCTION MODE

X

INTERLOCK: X - INDICATES TYPE

TYPES:
E - ELECTRICAL
M - MECHANICAL
K - KEY

GFP — GROUND FAULT PROTECTION

52 — MEDIUM VOLTAGE CIRCUIT BREAKER

FUSE, RATING, AND NUMBER OF FUSES AS NOTED

FUSED CUTOUT, CURRENT RATING, FUSE RATING, AND QUANTITY AS NOTED

FUSIBLE SWITCH, CURRENT RATING, FUSE RATING, AND QUANTITY AS NOTED (3 POLE UON)

NON-FUSED SWITCH, CURRENT RATING, AND NUMBER OF POLES AS NOTED (3 POLE UON)

DISCONNECT OR DRAWOUT CONNECTION

A B & A B — MAGNETIC MOTOR STARTER AND SEPARATELY MOUNTED COMBINATION MAGNETIC MOTOR STARTER

D C & D C — MOTOR/LOAD CONTROLLER AND SEPARATELY MOUNTED MOTOR/LOAD CONTROLLER WITH SHORT CIRCUIT PROTECTION AND DISCONNECT

MOTOR STARTER AND CONTROLLER SUBSCRIPTS:

A - MAGNETIC STARTER NEMA SIZE

B - STARTER TYPE
- NONE - FULL VOLTAGE NON-REVERSING (FVNR)
- FVR - FULL VOLTAGE REVERSING
- 2S - TWO SPEED
- RVAT - REDUCED VOLTAGE AUTO TRANSFORMER

C - CONTROL DIAGRAM OR CONTROLS SCHEDULE NUMBER (IF REQUIRED)

D - CONTROLLER TYPE
- VFD - VARIABLE FREQUENCY DRIVE
- SS - SOLID STATE
- CONT - CONTACTOR

SEPARATELY MOUNTED COMBINATION MOTOR STARTER OR CONTROLLER; SEE ELECTRICAL ONE - LINE DIAGRAM OR SCHEDULE FOR DESCRIPTION

SEPARATELY MOUNTED MOTOR STARTER OR CONTROLLER; SEE ELECTRICAL ONE-LINE DIAGRAM OR SCHEDULE FOR DESCRIPTION.

X — NON-FUSED SAFETY SWITCH, 30A, 3P, X INDICATES AMP RATING GREATER THAN 30A

X Y — FUSED SAFETY SWITCH, 3P, X INDICATES AMP RATING GREATER THAN 30A, Y INDICATES FUSE SIZE

CB — SEPARATELY MOUNTED CIRCUIT BREAKER; SEE ELECTRICAL ONE - LINE DIAGRAM OR SCHEDULE FOR DESCRIPTION

7 1/2 OR HP — MOTOR WITH DESIGN HORSEPOWER (WHEN INDICATED)

G — GENERATOR

ATS — TRANSFER SWITCH, CURRENT RATING, AND NUMBER OF POLES AS NOTED

ATS - AUTOMATIC
MTS - MANUAL

TRANSFORMER
- △ 3-PHASE, 3-WIRE DELTA CONNECTION
- Y 3-PHASE, 4-WIRE GROUNDED WYE CONNECTION

LP100 208/120V 3Ø 4W — SWITCHBOARD OR PANELBOARD; NAME, VOLTAGE, PHASE, NUMBER OF WIRES WHEN INDICATED

100 KVA — NON-MOTOR LOAD WITH DESIGN KVA, KW, OR AMP

VOLTAGE TRANSFORMER (VT, PT, OR CPT)

CURRENT TRANSFORMER (CT)

WH — UTILITY WATT-HOUR METER PER UTILITY REQUIREMENTS

DMP — DIGITAL METERING PACKAGE

GROUND

LIGHTNING ARRESTER

SPD — LOW VOLTAGE SURGE PROTECTIVE DEVICE

SS — SELECTOR SWITCH

PB — PUSHBUTTON

IC — INSTRUMENTATION / CONTROL DEVICE

SV — SOLENOID VALVE

CONTROL PANEL INTEGRAL OR PROVIDED WITH ASSOCIATED EQUIPMENT

CONTROL PANEL WITH DISCONNECT SWITCH INTEGRAL OR PROVIDED WITH ASSOCIATED EQUIPMENT

J OR J — JUNCTION OR PULL BOX

PANELBOARD (250V TO 600V)

PANELBOARD (LESS THAN 250V)

X — ELECTRICAL EQUIPMENT ENCLOSURE: SWITCHBOARD, MOTOR CONTROL CENTER, CONTROL PANEL, TRANSFORMER OR OTHER EQUIPMENT AS INDICATED. ESTIMATED SIZE AS INDICATED. WHEN USED X INDICATES EQUIPMENT TYPE.

EQUIPMENT TYPES:
- ATS - AUTOMATIC TRANSFER SWITCH
- CP - CONTROL PANEL
- MTS - MANUAL TRANSFER SWITCH
- MCC - MOTOR CONTROL CENTER
- UPS - UNINTERRUPTIBLE POWER SUPPLY
- VFD - VARIABLE FREQUENCY DRIVE
- SB - SWITCHBOARD
- SG - SWITCHGEAR
- T - TRANSFORMER

Z X Y — CEILING/PENDANT/BOLLARD MOUNTED LUMINAIRE, LAMP TYPE AS SPECIFIED

Z X Y — CEILING/PENDANT/BOLLARD MOUNTED LUMINAIRE, LAMP TYPE AS SPECIFIED, EMERGENCY (INTERNAL OR EXTERNAL POWER SOURCE AS INDICATED)

H X Y Z — WALL MOUNTED LUMINAIRE, LAMP TYPE AS SPECIFIED

H X Y Z — WALL MOUNTED LUMINAIRE, LAMP TYPE AS SPECIFIED, EMERGENCY (INTERNAL OR EXTERNAL POWER SOURCE AS INDICATED)

X Y Z — WALL MOUNTED FLOOD LUMINAIRE, LAMP TYPE AS SPECIFIED

X Y Z — POLE/STANCHION MOUNTED LUMINAIRE, LAMP TYPE AS SPECIFIED

X Y Z — POLE/STANCHION MOUNTED LUMINAIRE, LAMP TYPE AS SPECIFIED, EMERGENCY (INTERNAL OR EXTERNAL POWER SOURCE AS INDICATED

X Y Z — POLE/STANCHION MOUNTED FLOOR LUMINAIRE, LAMP TYPE AS SPECIFIED

Z Z X Y — CEILING/PENDANT MOUNTED LUMINAIRE, LAMP TYPE AS SPECIFIED

Z X Y — WALL MOUNTED LUMINAIRE, LAMP TYPE AS SPECIFIED

Z X Y — CEILING/PENDANT MOUNTED LUMINAIRE, LAMP TYPE AS SPECIFIED, ALL OR PARTIAL EMERGENCY (INTERNAL OR EXTERNAL POWER SOURCE AS INDICATED

Z X Y — WALL MOUNTED LUMINAIRE, LAMP TYPE AS SPECIFIED, ALL OR PARTIAL EMERGENCY (INTERNAL OR EXTERNAL POWER SOURCE AS INDICATED

X Y — EMERGENCY LIGHT, NUMBER OF ATTACHED HEADS AS SHOWN

X Y — EMERGENCY LIGHT, REMOTE MOUNTED HEAD

X Y H X Y — DOUBLE-FACED CEILING OR WALL MOUNTED EXIT LIGHT; DIRECTIONAL ARROWS (IF REQUIRED) AS INDICATED ON PLANS

X Y H X Y — SINGLE-FACED CEILING OR WALL MOUNTED EXIT LIGHT; DIRECTIONAL ARROWS (IF REQUIRED) AS INDICATED ON PLANS

LIGHTING FIXTURE SUBSCRIPTS:
- X - INDICATES LUMINAIRE TYPE PER LUMINAIRE SCHEDULE
- Y - INDICATES CIRCUIT NUMBER FROM PANELBOARD
- Z - INDICATES CONTROLLING SWITCH (IF REQUIRED)
- NL - NIGHT LIGHT UNSWITCHED

S Y X — WALL SWITCH

SUBSCRIPTS:
X - INDICATES TYPE
- NONE - SINGLE POLE
- 2 - DOUBLE POLE
- 3 - THREE-WAY
- 4 - FOUR-WAY
- K - KEY SWITCH
- P - PILOT LIGHT
- L - LIGHTED HANDLE
- DM - DIMMING
- MC - MOMENTARY CONTACT
- T - TIMER

Y - INDICATES CONTROLLING SWITCH (IF REQUIRED)

S Y X — MANUAL MOTOR STARTER

SUBSCRIPTS:
X - INDICATES TYPE
- HP - HORSEPOWER RATED
- TE - HORSEPOWER RATED WITH THERMAL ELEMENT
- FT - HORSEPOWER RATED WITH FUSETRON FUSE

Y - INDICATES SWITCH TYPE
- NONE - TOGGLE SWITCH TYPE
- R - ROTARY SWITCH TYPE

PC — PHOTOCELL

TC — TIME CLOCK

S OSX OR OSX — LIGHTING CONTROL OCCUPANCY SENSOR, WALL MOUNTED, X INDICATES SPECIFIC TYPE AS SPECIFIED

OSX — LIGHTING CONTROL OCCUPANCY SENSOR, CEILING MOUNTED, X INDICATES SPECIFIC TYPE AS SPECIFIED

X — ROOM/AREA LIGHTING CONTROL TYPE, SEE LIGHTING CONTROL SCHEDULE FOR REQUIREMENTS

2 a — LOW VOLTAGE DIGITAL WALL SWITCH, NUMBER INDICATES QUANTITY OF PUSH BUTTONS PER SINGLE GANG PLATE, LETTER INDICATES CONTROL ZONE WHEN SHOWN

PLUG-IN RECEPTACLE STRIP, QUANTITY AND SPACING OF RECEPTACLES AS NOTED OR SPECIFIED

X Y — SPECIAL-PURPOSE RECEPTACLE AS DEFINED ON PLANS

X Y OR X Y — TWO RECEPTACLES IN 2-GANG BOX UNDER COMMON COVER PLATE

X Y — DUPLEX RECEPTACLE

X Y — SIMPLEX RECEPTACLE

X Y — RECESSED FLOOR MOUNTED BOX, QUANTITY AND TYPE OF RECEPTACLES AS INDICATED

SUBSCRIPTS:

X - INDICATES TYPE
- GFCI - GROUND FAULT CIRCUIT INTERRUPTER
- IG - ISOLATED GROUND
- TR - TAMPER RESISTANT
- PLH - PLUG LOAD HALF CONTROLLED
- PLD - PLUG LOAD DUAL CONTROLLED
- USB - USB CHARGING STATION
- SPD - SURGE PROTECTIVE DEVICE

Y - INDICATES CIRCUIT NUMBER FROM PANELBOARD

CONDUIT TURNING UP

CONDUIT TURNING DOWN

(#X) — HOMERUN TO SOURCE (E.G. PANELBOARD, MCC) NUMBER IN PARENTHESES REPRESENTS CONDUCTOR SIZE OTHER THAN #12
SINGLE PHASE: 2#12, 1#12G IN 3/4"C
THREE PHASE: 3#12, 1#12G IN 3/4"C
UNLESS OTHERWISE NOTED, CONDUCTOR SIZE IS FOR ENTIRE CIRCUIT, SOURCE TO LAST DEVICE. ALSO, SEE ONE LINE DIAGRAM FOR CIRCUIT REQUIREMENTS

CONDUIT CONNECTION TO EQUIPMENT

CIRCUIT RUN BETWEEN DEVICES EXPOSED IN NON-ARCHITECTURALLY FINISHED AREAS; CONCEALED IN ARCHITECTURALLY FINISHED AREAS. CONDUIT AND CONDUCTOR SIZES SHALL BE THE SAME AS THE HOMERUN FOR THE CIRCUIT.

CONDUIT RUN BETWEEN DEVICES CONCEALED IN NON-ARCHITECTURALLY FINISHED AREAS OR UNDER FLOOR SLAB. CONDUIT AND CONDUCTOR SIZES SHALL BE THE SAME AS THE HOMERUN FOR THE CIRCUIT.

(#X) — CIRCUIT HASH MARKS (WHEN INDICATED); LONG, SHORT, SINGLE DOT, AND DOUBLE DOT REPRESENT PHASE, NEUTRAL, EQUIPMENT GROUND, AND ISOLATED EQUIPMENT GROUND, RESPECTIVELY. X REPRESENTS CONDUCTOR SIZE OTHER THAN #12 IN 3/4" CONDUIT.

CIRCUIT CONTINUATION

CONDUIT STUBBED OUT AND CAPPED

CORD AND PLUG CONNECTION

XXX OR XXX — CONDUIT TAG OR CIRCUIT NUMBER - WIRE AND CONDUIT SIZE AS SPECIFIED IN CIRCUIT SCHEDULE ON THE SHEETS

GROUND CABLE

GROUND ROD

GENERAL NOTES:

1. THIS IS A STANDARD ELECTRICAL SYMBOLOGY SHEET. NOT ALL SYMBOLS MAY BE USED ON THIS PROJECT.
2. SCREENING OR SHADING OF WORK IS USED TO INDICATE EXISTING COMPONENTS OR TO DE-EMPHASIZE PROPOSED IMPROVEMENTS TO HIGHLIGHT SELECTED TRADE WORK. REFER TO CONTEXT OF EACH SHEET FOR USAGE.
3. SEE P&ID LEGEND SHEET FOR PROJECT SPECIFIC EQUIPMENT SYMBOLS, EQUIPMENT ABBREVIATIONS, AND PIPING SYSTEM ABBREVIATIONS.

REGISTERED PROFESSIONAL ENGINEER — KYLE L. GANSKOP — PE-40295 — DATE 04/17/26 — NORTH DAKOTA

DESIGNED: J. MURPHY	SUB SHEET NO. E1	TITLE OF SHEET: ELECTRICAL SYMBOLS	DRAWING NO. 80051 168
CADD: A. STRAHL			PMIS/PKG NO. 345002
TECH. REVIEW: K. GANSKOP		KNIFE RIVER INDIAN VILLAGES N.H.S	SHEET 19 OF 22
DATE: 04/17/2026			

GENERAL NOTES:

1. EXISTING EQUIPMENT IS SHOWN IN HALF–TONE. NEW EQUIPMENT IS SHOWN IN FULL TONE.

2. THIS DRAWING IS PREPARED FROM LIMITED EXISTING DRAWINGS. FIELD VERIFY EXISTING CONDITIONS FOR ACCURACY. COORDINATE AND ADJUST ROUTING AND GRADING OF NEW CONDUIT TO AVOID INTERFERENCES.

3. VERIFY EXACT LOCATION AND RATING OF EXISTING EQUIPMENT MODIFIED BY THIS INSTALLATION AND CONFIRM WITH ENGINEER ANY DISCREPANCIES FOUND.

4. UNLESS NOTED OTHERWISE, ALL EXISTING ELECTRICAL EQUIPMENT SHALL REMAIN OPERATIONAL. COORDINATE OUTAGES WITH OWNER.

5. UNDERGROUND CONDUITS FROM LIFT STATION WETWELL TO CONDUIT SEAL FITTINGS AT PUMP CONTROL PANEL EQUIPMENT RACK SHALL BE PVC–RGS. ALL OTHER UNDERGROUND CONDUIT SHALL BE SCHED. 40 PVC WITH PVC–RGS RISER TO GRADE PER NPS STANDARD.

6. LIFT STATION HAZARDOUS CLASSIFICATION:
   - 6.a. INSIDE WETWELL: CLASS 1 DIVISION 1 PER NFPA 820 (2024) TABLE 4 LINE 14A.
   - 6.b. OUTSIDE WETWELL: CLASS 1 DIVISION 2 EXTENDING 36" HORIZONTALLY FROM THE EDGE OF HATCHES AND VERTICALLY FROM GROUND LEVEL TO 18" HEIGHT.
   - 6.c. VENT: CLASS 1 DIVISION 1 0–3 FT RADIALLY FROM TOP OF VENT, AND CLASS 1 DIVISION 2 3–5 FT RADIALLY FROM TOP OF VENT.
   - 6.d. UNDERGROUND CONDUITS FROM WETWELL: CLASS 1 DIVISION 1 TO CONDUIT SEAL FITTING.

7. INTERIOR OF WETWELL SHALL BE CONSIDERED A CORROSIVE LOCATION.

8. INSTALL CONDUIT SEAL FITTINGS ON ALL CONDUITS THAT ENTER THE LIFT STATION OR VALVE VAULT.

9. POSITION PUMP CONTROL PANEL AND EQUIPMENT RACK OUTSIDE OF THE HAZARDOUS CLASSIFIED AREA NOTED ABOVE.

10. SEE SITE DEMOLITION SHEET C2 AND DEMOLITION ONE–LINE DIAGRAM FOR DEMOLITION PLAN OF ELECTRICAL EQUIPMENT.

11. COORDINATE INTERIOR CONDUIT ROUTING WITH EXISTING BUILDING FEATURES.

12. REFER TO ONE–LINE DIAGRAM ON SHEET E4 FOR EQUIPMENT, CONDUIT AND WIRE SIZING.

13. CORE DRILL AND SEAL NEW CONDUIT PENETRATIONS.

14. PROVIDE CABLE GRIPS AND SUPPORT FOR ALL PUMP CABLES.

15. PROVIDE EXPANSION/DEFLECTION FITTINGS ON ALL CONDUITS RISING FROM GROUND AT BUILDING AND MODULAR EQUIPMENT RACK IN ACCORDANCE WITH DETAIL 3/E3.

16. DIRECT BURY CONDUITS UNLESS NOTED OTHERWISE IN ACCORDANCE WITH DETAIL 2/E3.

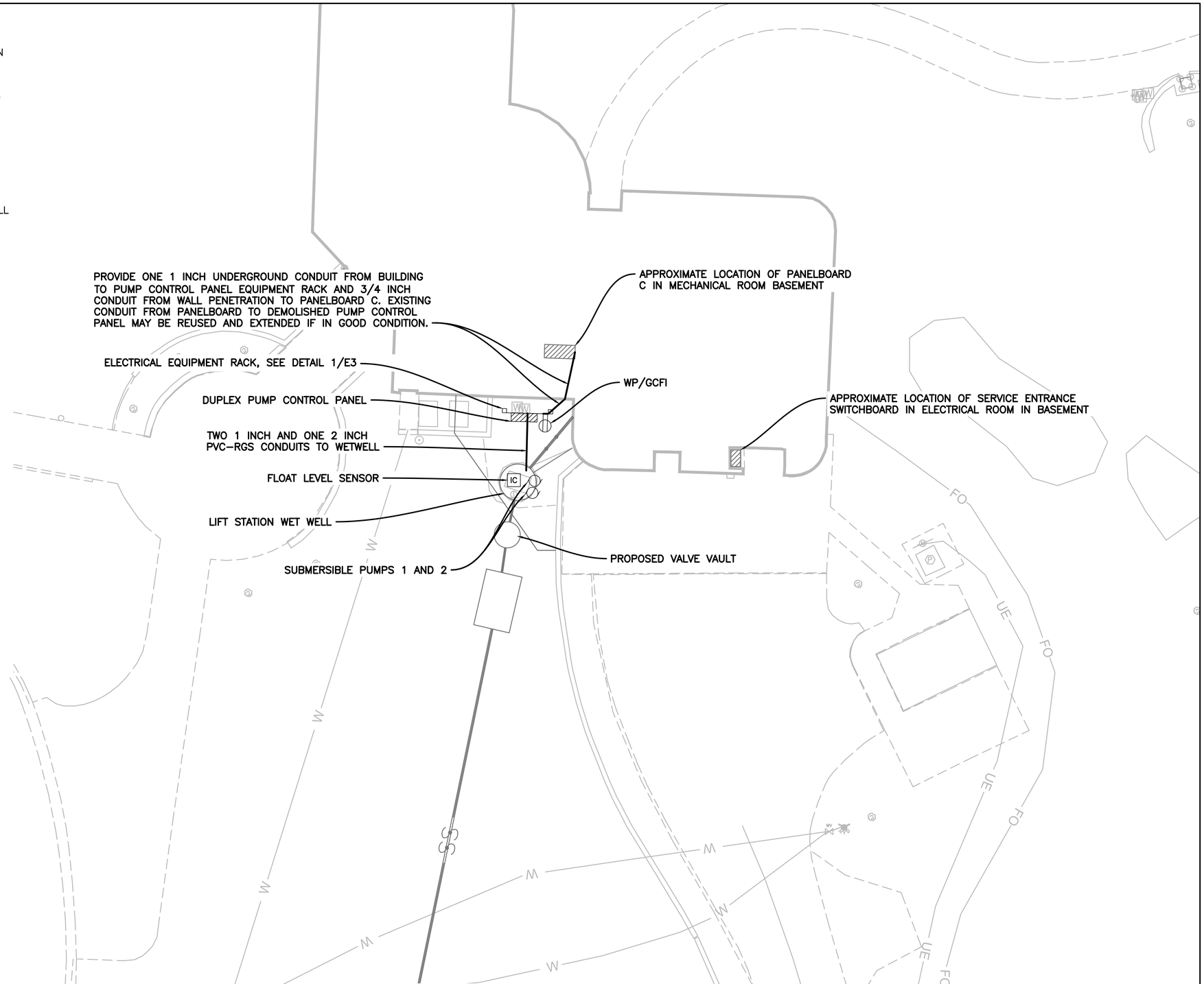

REGISTERED PROFESSIONAL ENGINEER
KYLE L. GANSKOP
PE-40295
DATE 04/17/26
NORTH DAKOTA

10 0 10 20
SCALE OF FEET

DESIGNED: J. MURPHY CADD A. STRAHL TECH. REVIEW: K. GANSKOP DATE: 04/17/2026	SUB SHEET NO. E2	TITLE OF SHEET ELECTRICAL SITE LAYOUT KNIFE RIVER INDIAN VILLAGES N.H.S	DRAWING NO. 80051 168 PMIS/PKG NO. 345002 SHEET 20 OF 22

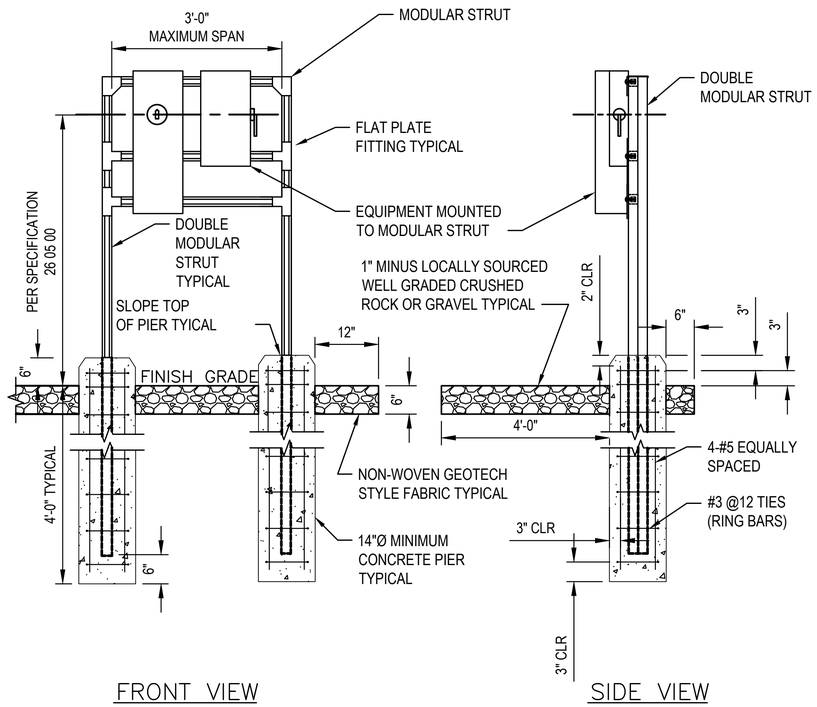

NOTES:

1. COMBINED EQUIPMENT LOADS PER 36" SPAN SHALL NOT EXCEED 500 LBS.
2. MODULAR STRUT WIDTH: 1 5/8".
3. RACK ASSEMBLY MATERIAL: GALVANIZED PER SPECIFICATION 26 05 00.
4. REPAIR CUT ENDS AND DAMAGED SURFACES.
5. GENERAL USE CONCRETE PER SPECIFICATION 32 16 23 FOR PIER.
6. DO NOT DISTURB EXISTING BUILDING WALL OR FOUNDATION.

1 / E3 MODULAR EQUIPMENT RACK ON PIER BASE

NO SCALE

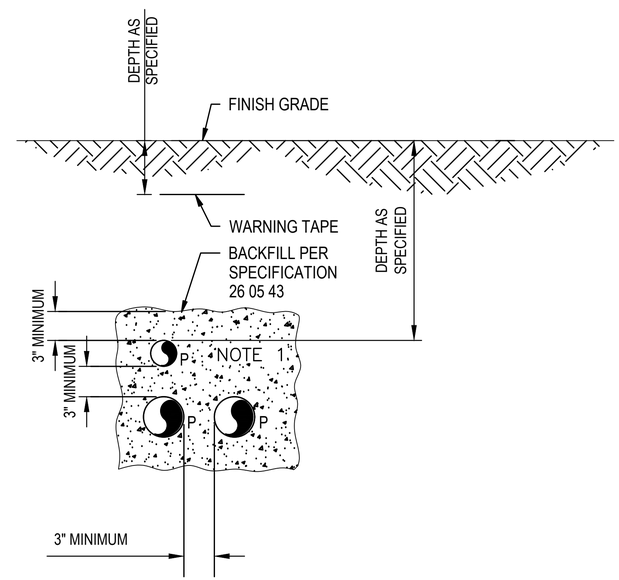

NOTES:

1. NUMBER OF CONDUITS AS REQUIRED FOR THE APPLICATION.
2. P SUBSCRIPT ELECTRICAL POWER OR CONTROL CONDUIT.

2 / E3 DIRECT BURIED CONDUIT(S) SECTION

NO SCALE

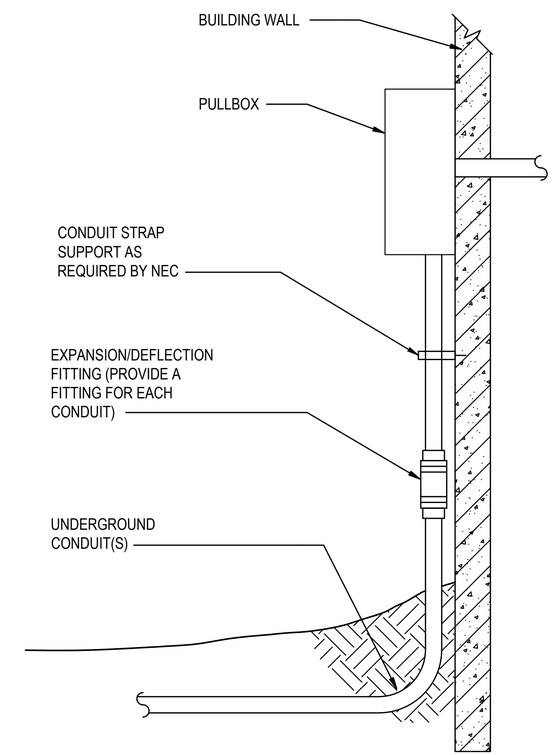

3 / E3 UNDERGROUND CONDUIT BUILDING ENTRY

NO SCALE

REGISTERED PROFESSIONAL ENGINEER
KYLE L. GANSKOP
PE-40295
DATE 04/17/26
NORTH DAKOTA

DESIGNED: J. MURPHY CADD A. STRAHL TECH. REVIEW: K. GANSKOP DATE: 04/17/2026	SUB SHEET NO. E3	TITLE OF SHEET ELECTRICAL DETAILS KNIFE RIVER INDIAN VILLAGES N.H.S	DRAWING NO. 80051 168 PMIS/PKG NO. 345002 SHEET 21 OF 22

GENERAL NOTES:

1. EXISTING EQUIPMENT IS SHOWN IN HALF–TONE. NEW EQUIPMENT IS SHOWN IN FULL TONE.
2. THIS DRAWING IS PREPARED FROM RECORD DRAWINGS AND LIMITED SITE PHOTOGRAPHS. FIELD VERIFY EXISTING CONDITIONS FOR ACCURACY. COORDINATE AND ADJUST ROUTING AND GRADING OF NEW CONDUIT TO AVOID INTERFERENCES.
3. VERIFY RATING OF EXISTING EQUIPMENT MODIFIED BY THIS INSTALLATION AND CONFIRM WITH ENGINEER ANY DISCREPANCIES FOUND.
4. UNLESS NOTED OTHERWISE, ALL EXISTING ELECTRICAL EQUIPMENT SHALL REMAIN OPERATIONAL. COORDINATE OUTAGES WITH OWNER.

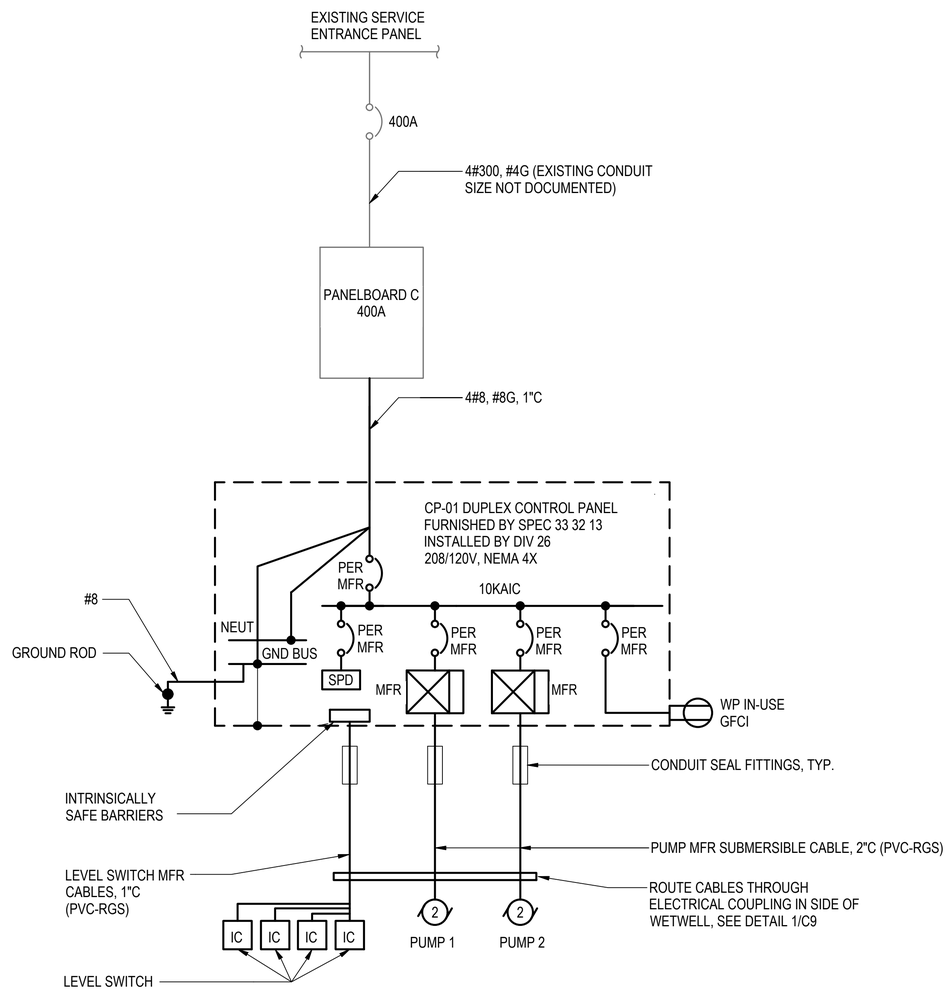

1 / E4 ONE–LINE DIAGRAM
NO SCALE

EXISTING PANEL: PANELBOARD C

MFR: SQUARE D TYPE NQOD

LOCATION: MECHANICAL ROOM BASEMENT
SUPPLY FROM: MAIN SWBD
MOUNTING: SURFACE
ENCLOSURE: NEMA 1

VOLTS: 120/208
PHASE: 3
WIRE: 4+GND
INTEGRAL SPD: NO

A.I.C. RATING: 22 KA
MAINS TYPE: MLO
MAINS RATING: 400 A
SERVICE ENTRANCE LABEL: NO

CKT NO.	DESCRIPTION	CONNECTED LOAD (VA) LTS	REC	MECH	MISC	OCP AMPS	P		OCP AMPS	P	CONNECTED LOAD (VA) LTS	REC	MECH	MISC	DESCRIPTION	CKT NO.
1					480			A	20	1					**SPARE**	2
3	IRRIGATION WATER WELL				480	15	3	B							**NOTE 2**	4
5					480			A	20					100	IRRIGATION CONTROLLER	6
7	ELECTRIC FURNACE			7,350				B					8,820		ELECTRIC FURNACE	8
9	NO.1			7,350		90	3	A	125	3			8,820		NO. 2	10
11	OFFICE & BASEMENT			7,350				B					8,820		VISITOR AREA	12
13	CU-2A			3,600				A					3,600		CU-2B	14
15	COFFEE & BASEMENT			3,600		50	3	B	50	3			3,600		VISITOR AREA	16
17	CONDENSER UNIT			3,600				A					3,600		AREA	18
19	REC. B01, B11, MECH, N REC.		720			20		B	30	2			2,000		HOT WATER	20
21	REC. B01, MEC, RADIO REC		100			20		A					2,000		HEATER	22
23	REC B01, STAIR MECH,		720			20		B	15	1					LTS MECH RM B01	24
25	RADON EXHAUST FAN		100			20		A						**1,861**		26
27	PRE-ACTION PANEL					15		B	**30**	**3**				**1,861**	**LIFT STATION**	28
29	AIR COMPRESSOR					20		A						**1,861**	**NOTE 3**	30
31	SPACE							B							SPACE	32
33	SPACE							A							SPACE	34
35	SPACE							B							SPACE	36
37	SPACE							A							SPACE	38
39	SPACE							B							SPACE	40
41	SPACE							A							SPACE	42

LOAD SUMMARY

	LTS	REC	MECH	MISC	SPARE	TOTAL				PHASE BALANCE	
CONNECTED LOAD (KVA)	0.0	1.6	74.1	7.1	---	82.9		208	LINE-TO-LINE VOLTS	PHASE A (KVA)	29
DEMAND FACTOR	1.25	NEC	1.00	1.00	20%	---		230	CONNECTED AMPS	PHASE B (KVA)	28
DESIGN LOAD (KVA)	0.0	1.6	74.1	7.1	16.6	99.4		276	DESIGN AMPS	PHASE C (KVA)	27

NOTES:
1. PANELBOARD IS EXISTING. EXISTING LOADS ARE SHOWN IN LIGHTER TONE.
2. LABEL EXISTING LIFT STATION BREAKER AS SPARE
3. PROVIDE BREAKER IN EXISTING PREPARED SPACE
4. NET LOAD INCREASE IS 4024VA/11Amps

REGISTERED PROFESSIONAL ENGINEER KYLE L. GANSKOP PE-40295 DATE 04/17/26 NORTH DAKOTA

DESIGNED: J. MURPHY	SUB SHEET NO. E4	TITLE OF SHEET: ELECTRICAL ONE LINE DIAGRAMS AND SCHEDULE	DRAWING NO. 80051 168
CADD A. STRAHL			PMIS/PKG NO. 345002
TECH. REVIEW: K. GANSKOP		KNIFE RIVER INDIAN VILLAGES N.H.S	SHEET 22 OF 22
DATE: 04/17/2026			