UNITED STATES DEPARTMENT OF THE INTERIOR

BUREAU OF LAND MANAGEMENT

INDIAN SPRINGS VAULT TOILET

TWIN FALLS DISTRICT

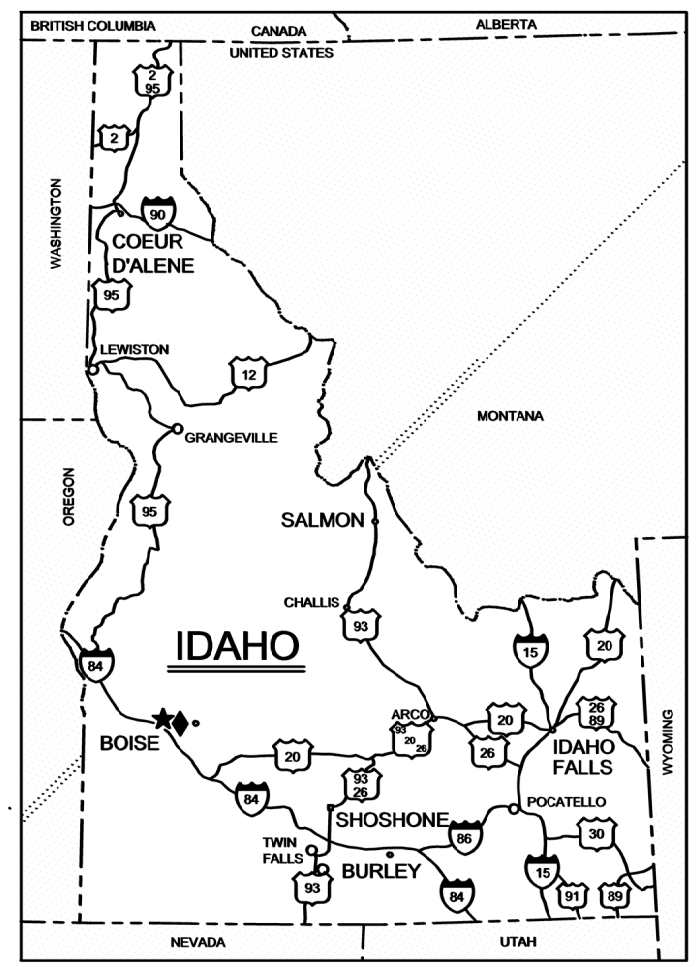

AREA REFERENCE MAP

SYMBOL	DESCRIPTION	SYMBOL	DESCRIPTION
90	INTERSTATE HIGHWAY	★	STATE CAPITOL
93	U.S. HIGHWAY	♦	BLM STATE OFFICE
66	STATE HIGHWAY	•	BLM DISTRICT OFFICE

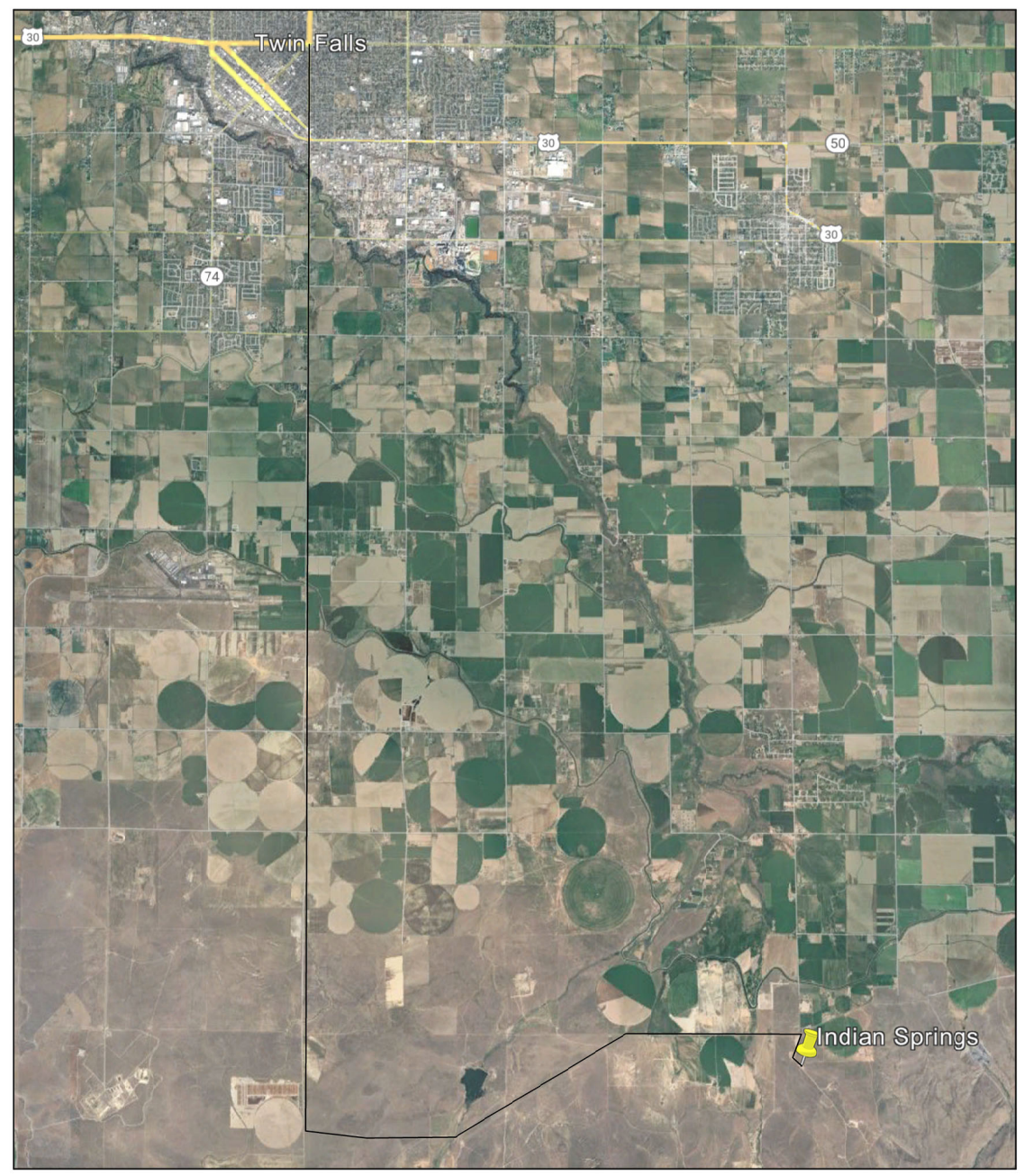

INDIAN SPRINGS IS LOCATED
APPROXIMATELY 17 MILES
SOUTH OF TWIN FALLS IDAHO.
OFF OF E 2900 N

LAT. 42.413369
LONG. -114.362856

DRAWING INDEX

SHEET NO.	DESRIPTION
1	TITLE
2	SITE
3	VAULT TOILET AND ABA PARKING
4	VAULT TOILET
5	CONCRETE DETAIL
6	MARKINGS DETAIL
7	ABA SIGN DETAIL

UNITED STATES DEPARTMENT OF THE INTERIOR
BUREAU OF LAND MANAGEMENT

TITLE

INDIAN SPRING VAULT TOILET

TWIN FALLS

MARK	DESCRIPTION	DATE	APPROVED

PROJECT NO:
DESIGN OFFICE:
DESIGNED BY: C STINE
DRAWN BY: C STINE
CHK'D BY:
APPROVED BY:
DATE: 06/04/2024

SHEET 1 OF 7

Point Table

Point #	Elevation	Northing	Easting	Description
1	4222.09	15416918.32	2352265.49	CP1
2	4229.34	15416795.29	2352454.71	CP2

NOTE:
CALL BEFORE YOU DIG.
CALL 811

N

0 20 40 Feet

LEGEND	
EDGE OF ROAD	— — —

NATIONAL SYSTEM OF PUBLIC LANDS
U.S. DEPARTMENT OF THE INTERIOR
BUREAU OF LAND MANAGEMENT

UNITED STATES DEPARTMENT OF THE INTERIOR
BUREAU OF LAND MANAGEMENT

SITE

INDIAN SPRING VAULT TOILET

TWIN FALLS

MARK	DESCRIPTION	DATE	APPROVED

PROJECT NO:
DESIGN OFFICE:
DESIGNED BY: C STINE
DRAWN BY: C STINE
CHK'D BY:
APPROVED BY:
DATE: 06/04/2024

ID

SHEET 2 OF 7

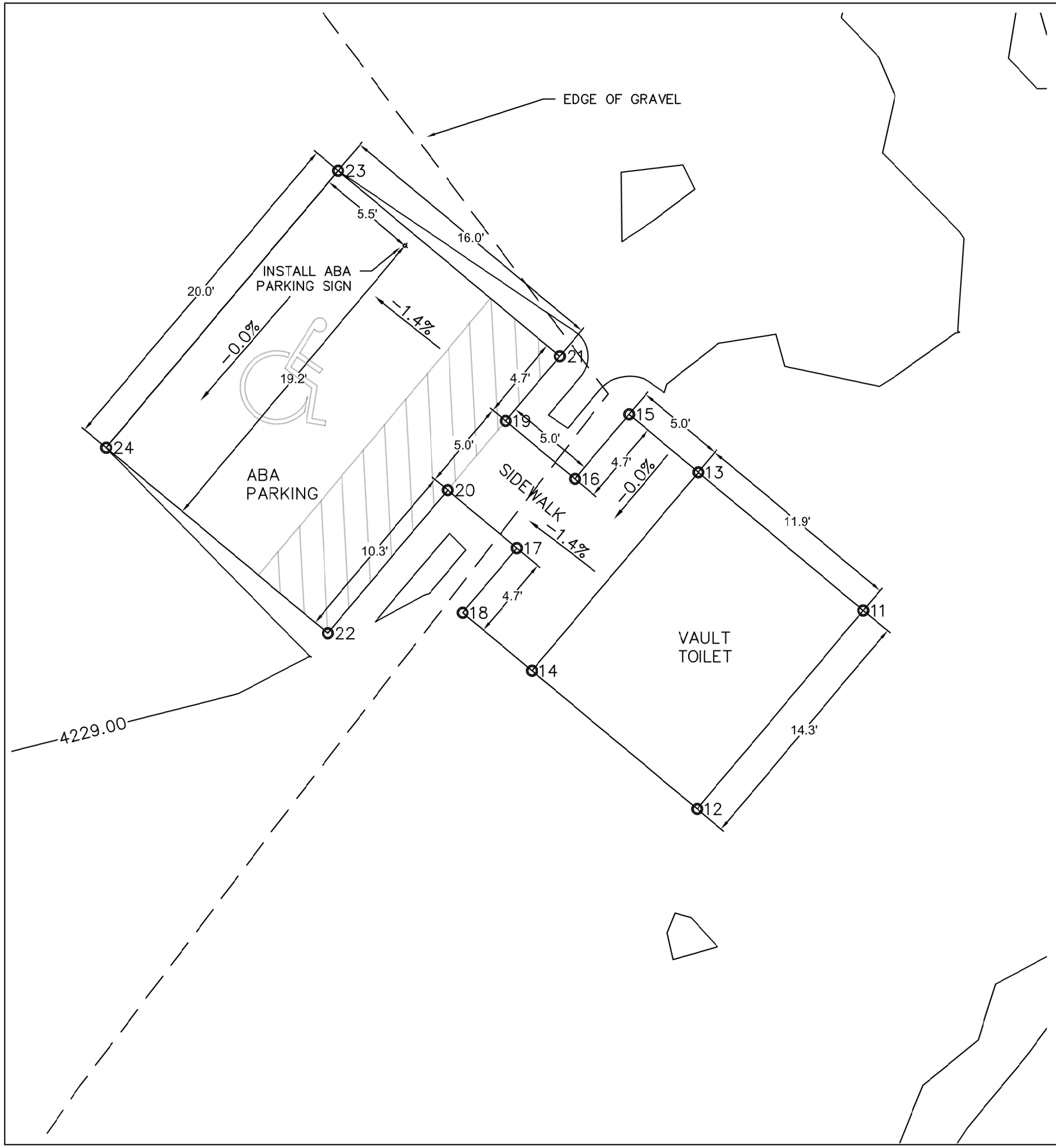

Point Table

Point #	Elevation	Northing	Easting	Description
11	4229.52	15416766.35	2352441.15	VT
12	4229.52	15416755.36	2352431.95	VT
13	4229.52	15416774.00	2352432.02	VT
14	4229.52	15416763.01	2352422.81	VT
15	4229.45	15416777.21	2352428.18	W
16	4229.45	15416773.63	2352425.19	W
17	4229.45	15416769.80	2352421.98	W
18	4229.45	15416766.22	2352418.98	W
19	4229.38	15416776.84	2352421.35	W
20	4229.38	15416773.01	2352418.14	W
21	4229.38	15416780.42	2352424.35	ABA
22	4229.38	15416765.09	2352411.51	ABA
23	4229.16	15416790.69	2352412.08	ABA
24	4229.16	15416775.36	2352399.24	ABA

N

0 5 10 Feet

LEGEND	
EDGE OF ROAD	— — —

NATIONAL SYSTEM OF PUBLIC LANDS
U.S. DEPARTMENT OF THE INTERIOR
BUREAU OF LAND MANAGEMENT

UNITED STATES DEPARTMENT OF THE INTERIOR
BUREAU OF LAND MANAGEMENT

VAULT TOILET AND ABA PARKING

INDIAN SPRING VAULT TOILET

TWIN FALLS ID

MARK	DESCRIPTION	DATE	APPROVED

PROJECT NO:
DESIGN OFFICE:
DESIGNED BY: C STINE
DRAWN BY: C STINE
CHK'D BY:
APPROVED BY:
DATE: 06/04/2024

SHEET 3 OF 7

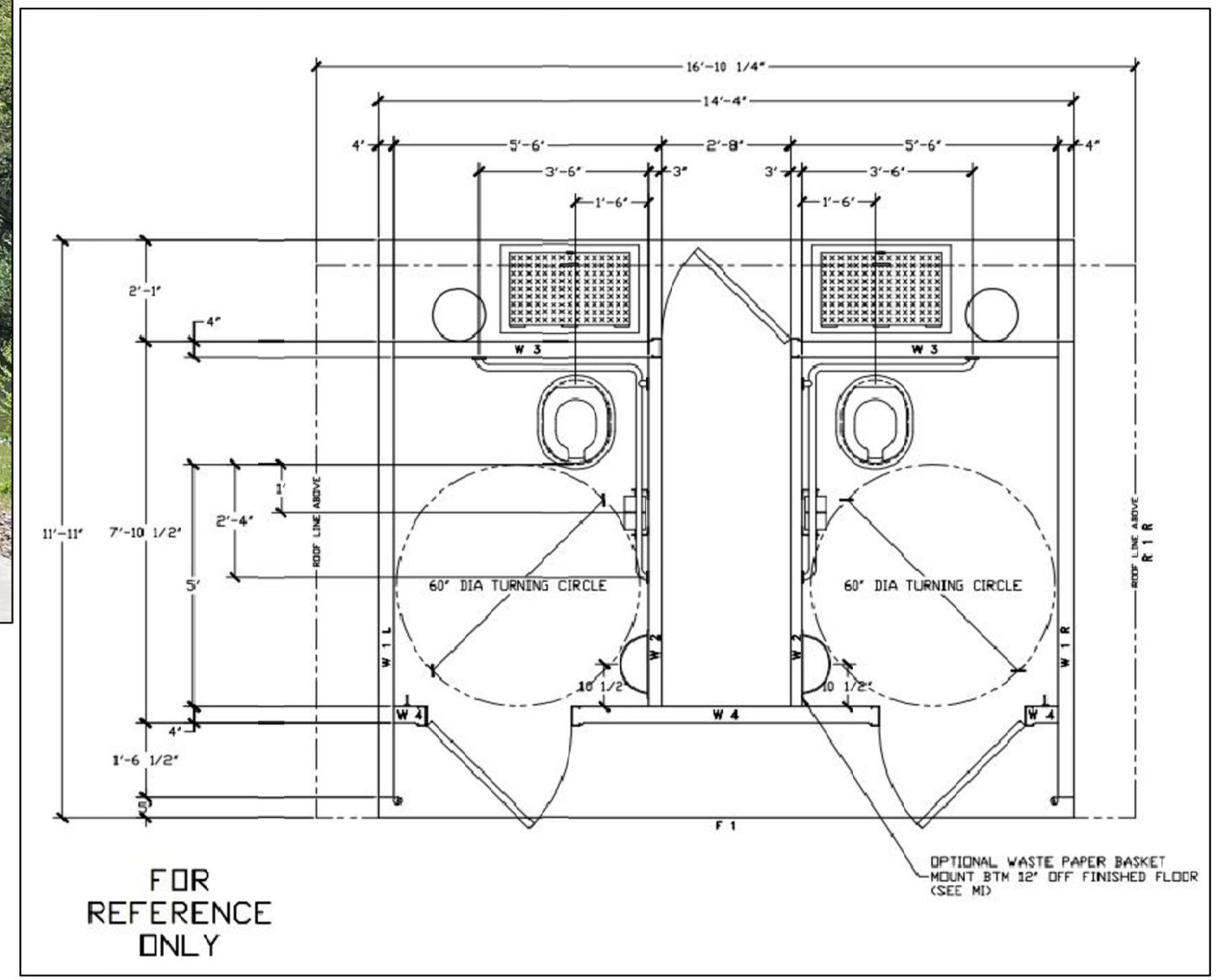

CXT TIOGA DOUBLE VAULT TOILET WITH CHASE
OR APPROVED EQUAL

UNITED STATES DEPARTMENT OF THE INTERIOR
BUREAU OF LAND MANAGEMENT

VAULT TOILET

INDIAN SPRING VAULT TOILET

MARK	DESCRIPTION	DATE	APPROVED	ID
				TWIN FALLS

PROJECT NO:
DESIGN OFFICE:
DESIGNED BY: C STINE
DRAWN BY: C STINE
CHK'D BY:
APPROVED BY:
DATE: 06/04/2024

SHEET 4 OF 7

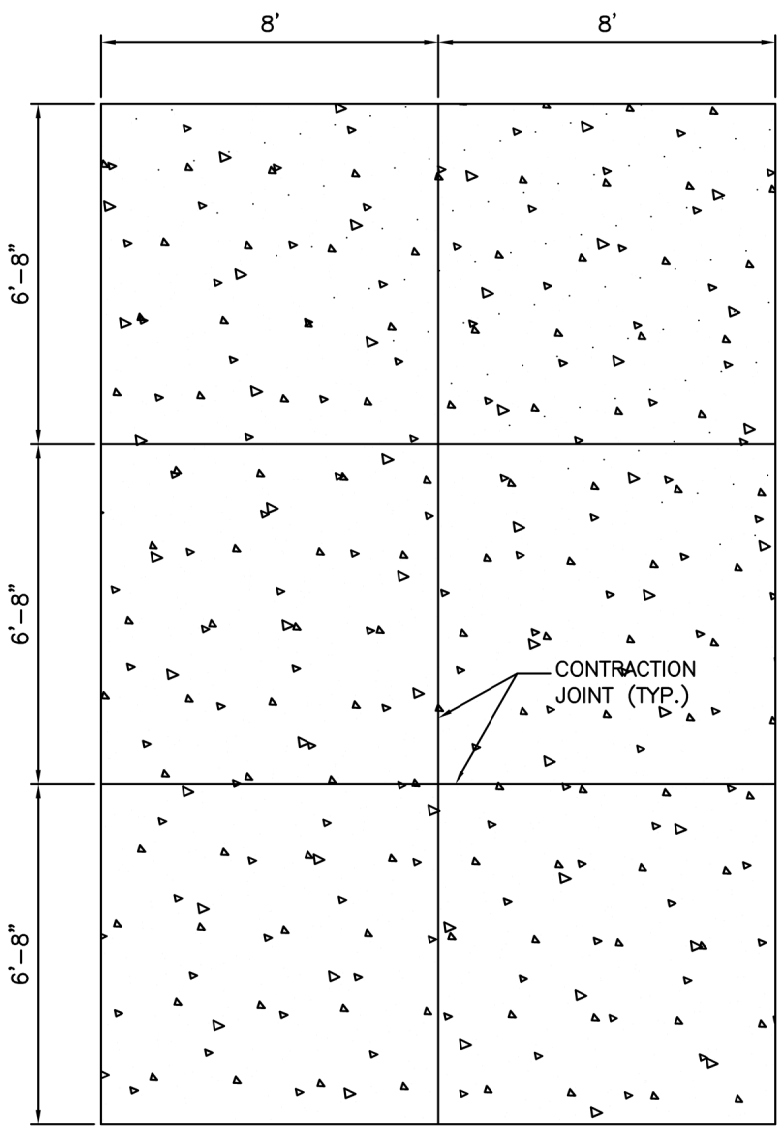

PARKING PAD JOINT LAYOUT (NTS)

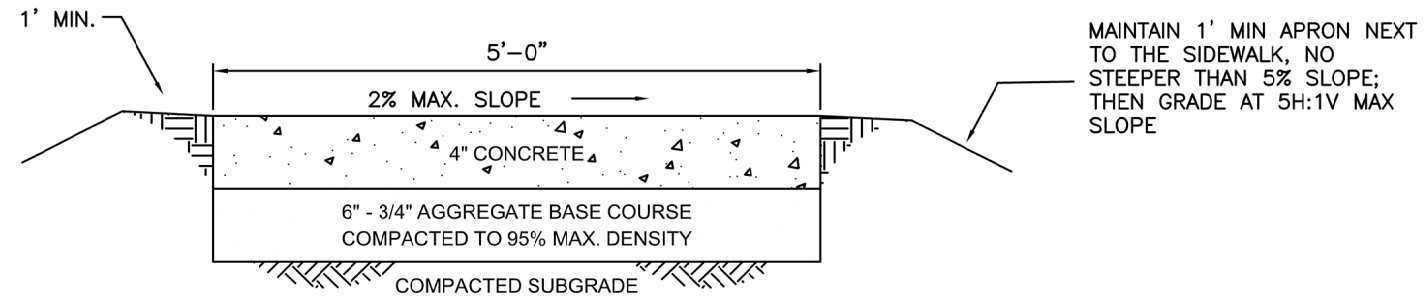

SIDEWALK SECTION (NTS)

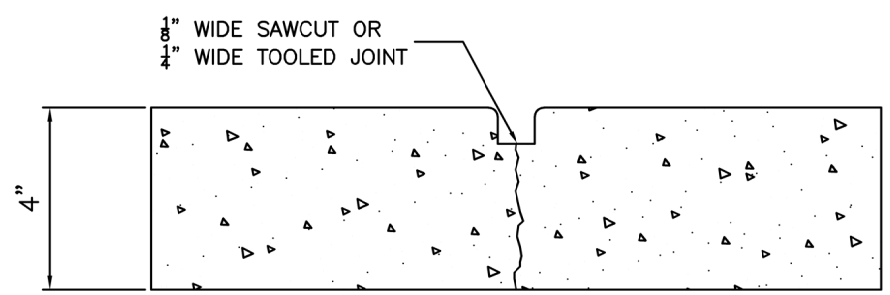

CONTRACTION JOINT TYPICAL SECTION (NTS)

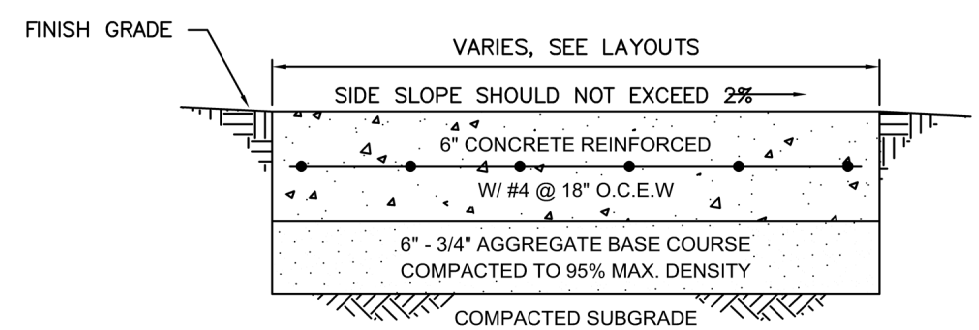

PARKING PAD SECTION (NTS)

UNITED STATES DEPARTMENT OF THE INTERIOR
BUREAU OF LAND MANAGEMENT

CONCRETE DETAIL

INDIAN SPRING VAULT TOILET

TWIN FALLS ID

MARK	DESCRIPTION	DATE	APPROVED

PROJECT NO:
DESIGN OFFICE:
DESIGNED BY: C STINE
DRAWN BY: C STINE
CHK'D BY:
APPROVED BY:
DATE: 06/04/2024

SHEET 5 OF 7

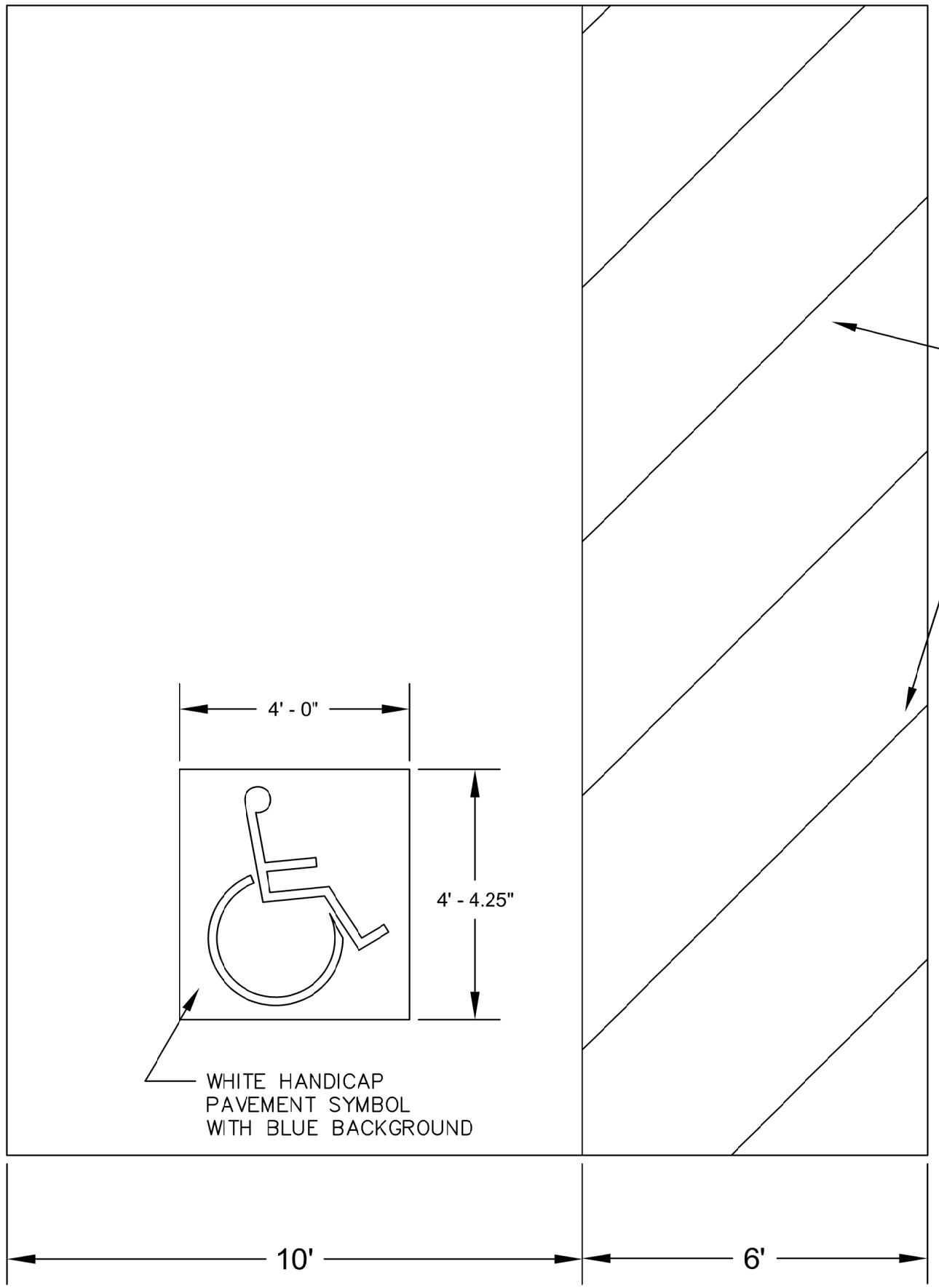

NOTE:

1. ALL CROSS SLOPES ARE NOT TO EXCEED 2%
2. MATCH ALL SIDEWALKS TO VAULT TOILETS
3. SEEDING IS REQUIRED AT ALL DISTURBED AREAS (SEED PROVIDED BY THE BLM)

PAINTED PARKING "ISLAND" WITH BLUE STRIPES AT 45° ANGLE TO PARKING AT 3' O.C.

NATIONAL SYSTEM OF PUBLIC LANDS
U.S. DEPARTMENT OF THE INTERIOR
BUREAU OF LAND MANAGEMENT

UNITED STATES DEPARTMENT OF THE INTERIOR
BUREAU OF LAND MANAGEMENT

MARKING DETAIL

INDIAN SPRING VAULT TOILET

TWIN FALLS ID

MARK	DESCRIPTION	DATE	APPROVED

PROJECT NO:
DESIGN OFFICE:
DESIGNED BY: C STINE
DRAWN BY: C STINE
CHK'D BY:
APPROVED BY:
DATE: 06/04/2024

SHEET 6 OF 7

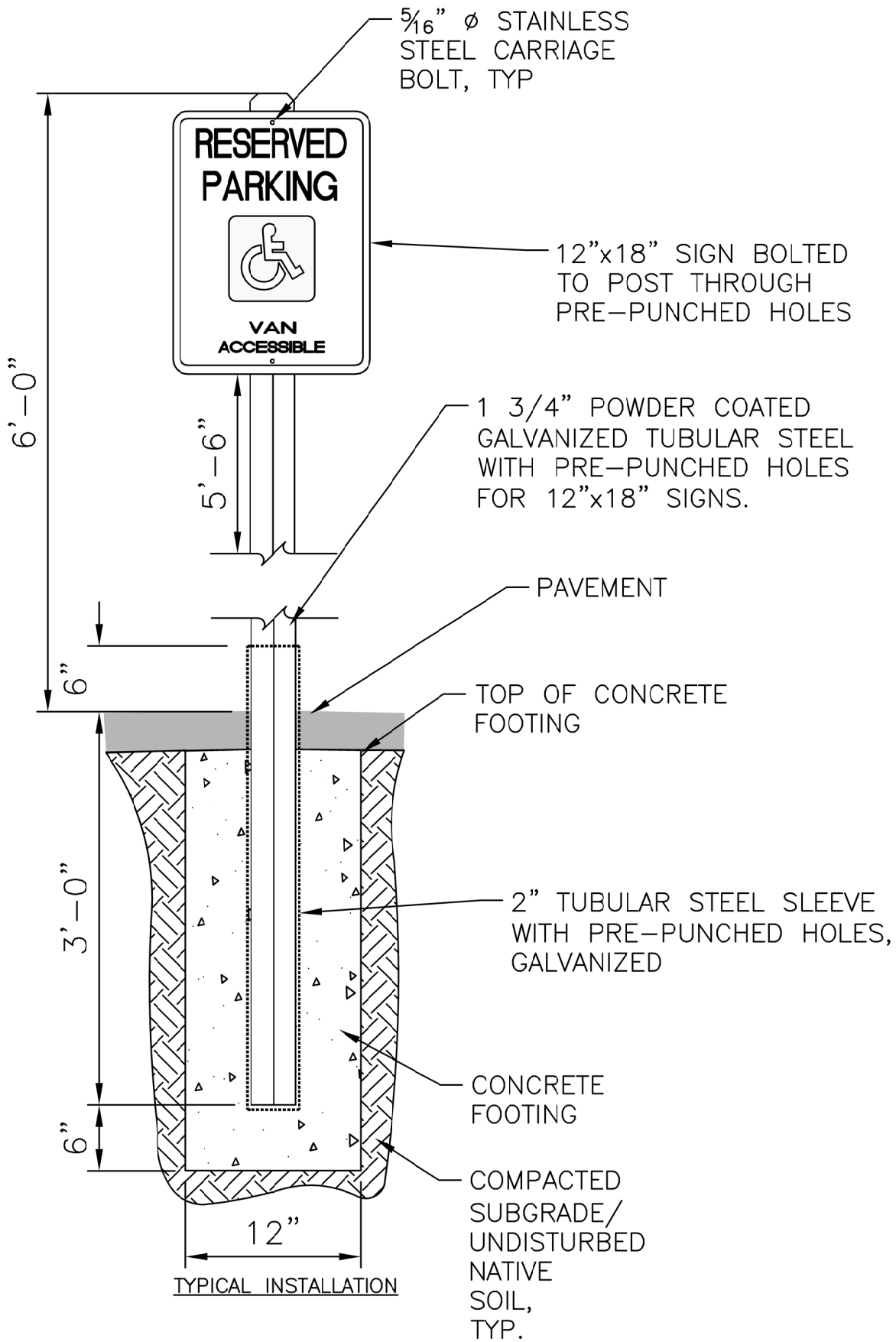

TYPICAL INSTALLATION

NOTES:

SIGN POST SHALL BE POWDER COATED THE COLOR BROWN. CONTRACTOR SHALL OBTAIN APPROVAL FROM THE CONTRACTING OFFICER PRIOR TO PURCHASE.

NATIONAL SYSTEM OF PUBLIC LANDS
U.S. DEPARTMENT OF THE INTERIOR
BUREAU OF LAND MANAGEMENT

ID

UNITED STATES DEPARTMENT OF THE INTERIOR
BUREAU OF LAND MANAGEMENT

ABA SIGN DETAIL

INDIAN SPRING VAULT TOILET

TWIN FALLS

MARK	DESCRIPTION	DATE	APPROVED

PROJECT NO:
DESIGN OFFICE:
DESIGNED BY: C STINE
DRAWN BY: C STINE
CHK'D BY:
APPROVED BY:
DATE: 06/04/2024

SHEET 7 OF 7