MANUAL HOMESTYLE

COMMERCIAL STACK DRYER – MILITARY

OVERALL HEIGHT OF 75.38" (1915 mm) - SOLID DOOR

Built for Reliable Performance

Speed Queen® dryers do more than dry your laundry - they dry it to perfection each and every load for the life of the machine. Through special drying cycles, a flawless Axial Airflow pattern and advanced moisture sensing, you can eliminate excessive drying and save money on your utility bill. Speed Queen's dryers provide the perfect balance of heat, airflow and tumble action for optimal performance and efficiency. Speed Queen's stack dryer offers the same great features as the single load dryer. Two commercial dryers in the space of one, both operating independently, including independent controls for optimum usage. ADA Compliant (bottom dryer only).

- Industry's largest door opening 2.06 sq. ft. (1914 cm²)
- Quiet, efficient blower system
- Door is reversible for installation flexibility
- High efficiency exhaust blower with superior airflow 220 cfm (105 liters/sec)
- 100% serviceable from the front
- Space-saving narrow cabinet 26.875" (683 mm)
- Upfront lint filter easy to clean and secured
- Durable galvanized steel cylinder

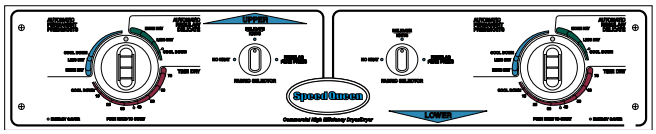

SPECIFICATIONS

COMMERCIAL STACK DRYER – MILITARY

OVERALL HEIGHT OF 75.38" (1915 mm) - SOLID DOOR

MODEL - see below for all models and activation available		
CONTROL OPTION		Manual Homestyle
COLOR		White
CAPACITY - lb (kg)		18 (8.2) (ea)
OVERALL WIDTH - in (mm)		26.875 (683)
OVERALL DEPTH - in (mm)		28 (711)
OVERALL HEIGHT - in (mm)		75.38 (1915)
CYLINDER VOLUME - cu. ft. (liters)		7.0 (198) (ea)
MOTOR (THERMAL PROTECTED)		0.33 HP
TYPE OF GAS (GAS MODELS ONLY)		Factory equipped natural
AIR OUTLET DIAMETER - in (mm)		4 (102)
EXHAUST AIRFLOW - cfm (liters/sec)		220 (105)
AVAILABLE CYCLES		Regular, Permanent Press, Delicate, Time Dry, Quick Dry, Fluff Up
ELECTRICAL REQUIREMENTS ♦	▪ Electric	120/208/240/60/1-30 amp
	Gas	120/60/1-15 amp
HEATING ELEMENT	Electric	5350W, 240V 4100W, 208V
	Gas	22,500 Btu
NET WEIGHT - lb (kg)	Electric	262 (119)
	Gas	270 (122.5)
SHIPPING WEIGHT lb (kg)	Electric	272 (123.4)
	Gas	277 (125.6)
SHIPPING DIMENSIONS APPROX. - in (mm)	Width	33 (838)
	Depth	30 (762)
	Height	80 (2032)
AGENCY APPROVALS	Electric	cULus
	Gas	cCSAus

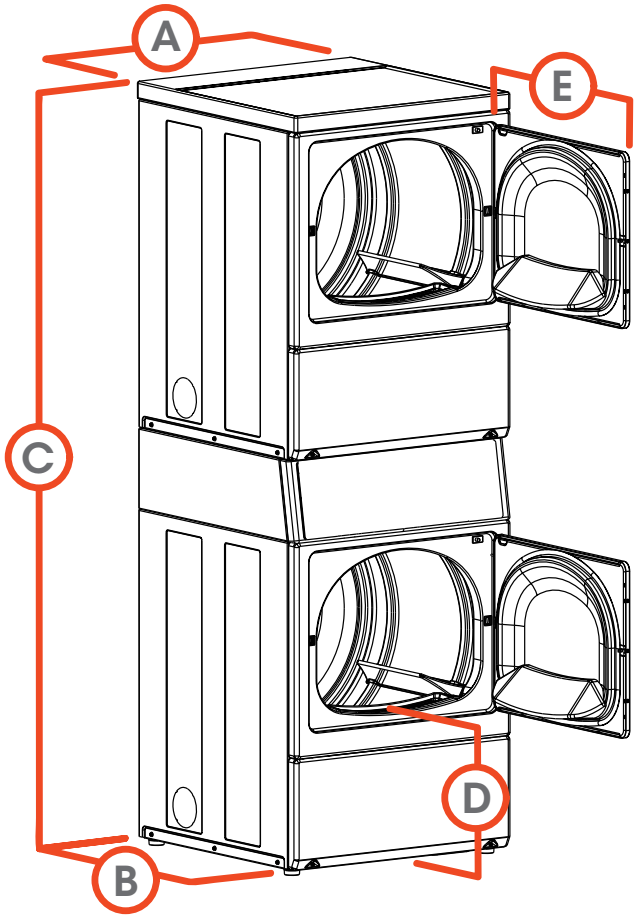

A.	OVERALL WIDTH - in (mm)	26.875 (683)
B.	OVERALL DEPTH - in (mm)	28 (711)
C.	OVERALL HEIGHT - in (mm)	75.38 (1915)
D.	FLOOR TO DOOR OPENING -in (mm)	15.44 (392)
E.	DOOR SWING - in (mm)	23.5 (597)

MODELS	VOLTAGE/FREQ/PH	
KES17AWF	120/208/240/60/1	Electric
KGS17AWF	120/60/1	Gas

♦ NOTE: Each stack dryer pocket requires its own separate power cord (not supplied).

▪ Electric dryers come equipped and are UL approved for 208/240/60/1 operation. Gas dryers can be field converted for operation on LP gas with optional 458P3 conversion kit.

For the most accurate information, the installation guide should be used for all installations, design and construction purposes. Due to continuous product improvements, design and specifications subject to change without notice. The quality management systems at Alliance Laundry Systems are registered to ISO 9001.

AM20-0061 • ©2020 Alliance Laundry Systems LLC