Whirlpool® Electric Built-in Cooktop

PRODUCT MODEL NUMBERS

RCS2002R	RCS3014R
RCS2012R	RCS3614R
RCS3004R	

Electrical: A 4-wire or 3-wire, single phase, 240 volt, 60 Hz., AC only electrical supply is required on a separate, 40-amp circuit, fused on both sides of the line.

NOTE: The 15" (38.1 cm) model series requires a 20-amp circuit.

OVERALL DIMENSIONS

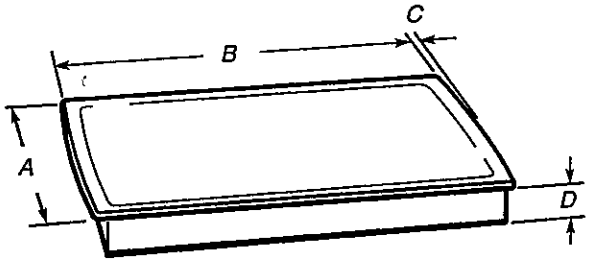

A. 21" (53.3 cm)
B. 30" (76.2 cm)
36" (91.4 cm)
C. ¾" (1.9 cm)
D. 2⅞" (7.3 cm)

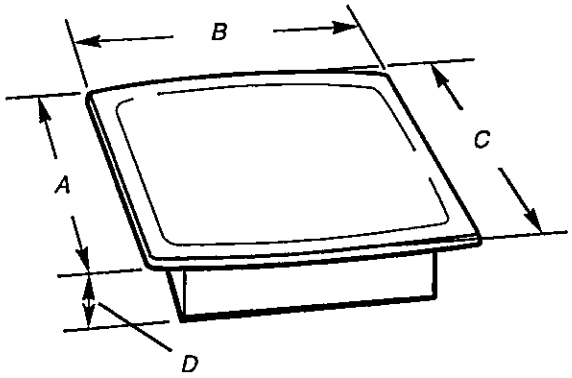

A. 16½" (41.9 cm)
B. 21" (53.3 cm)
C. 18" (47.7 cm) overall
D. 2⅞" (7.3 cm)

CABINET OPENING DIMENSIONS

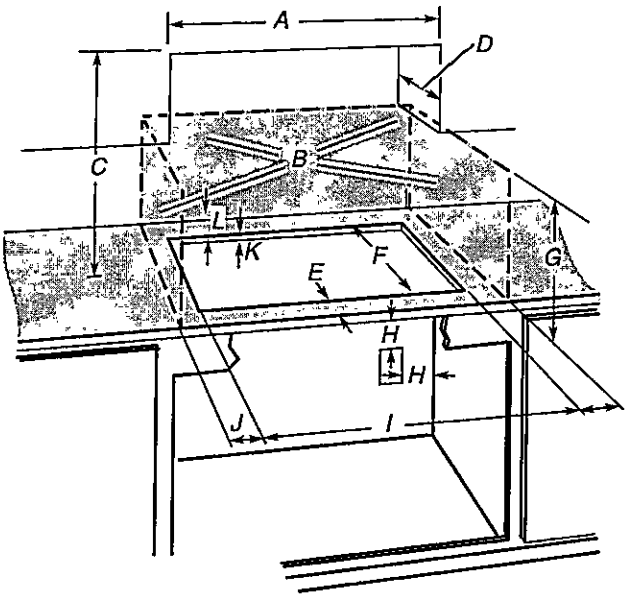

For 21" (53.3 cm) model only:

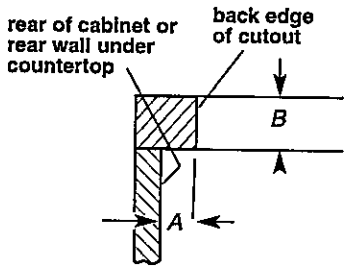

A. 11/16" (1.7 cm) min.
B. 1 5/16" (3.4 cm) max.

A. 21" (53.3 cm) on 21" (53.3 cm) models; 30" (76.2 cm) models on 30" (76.2 cm) models; 36" (91.4 cm) on 36" (91.4 cm) models

B. Combustible area above countertop (shown by dashed box above)

C. 30" (76.2 cm) minimum clearance between top of cooktop platform and bottom of unprotected wood or metal cabinet (24" [61 cm] minimum clearance if bottom of wood or metal cabinet is protected by not less than ¼" [0.6 cm] flame retardant millboard covered with not less than No. 28 MSG sheet steel, 0.015" [0.04 cm] stainless steel or 0.024" [0.06 cm] aluminum or 0.020" [0.05 cm] copper)

D. 13" (33 cm) recommended upper cabinet depth

E. 3" (7.6 cm)

F. 15½" (34.4 cm) on 21" (53.3 cm) models; 18⅝" (45.7 cm) on 30" (76.2 cm) models and 36" (91.4 cm) models

G. 18" (45.7 cm) minimum clearance from upper cabinet to countertop within minimum horizontal clearances to cooktop

H. Junction box or outlet; 12" (30.5 cm) minimum from bottom of countertop; 10" (25.4 cm) from right side of cabinet

I. 18⅝" (33.7 cm) on 21" (53.3 cm) models; 28⅞" (47.3 cm) on 30" (76.2 cm) models; 35" (90.2 cm) on 36" (91.4 cm) models

J. 1" (2.5 cm) minimum distance to nearest left and right side combustible surface above cooktop

K. 1 5/16" (3.4 cm) max. counter thickness on 21" (53.3 cm) models. See following illustration.

L. 1" (2.5 cm) minimum clearance between back wall and countertop

Because Whirlpool Corporation policy includes a continuous commitment to improve our products, we reserve the right to change materials and specifications without notice.

Dimensions are for planning purposes only. For complete details, see Installation Instructions packed with product. Specifications subject to change without notice.

Ref. 8286310
08-10-05

[redacted]

Search

Presidents' Day Top Picks | 12 Months Special Financing | Clearance - Extra 5% Off | Town Perks Savings | Join Our Trade Program!

Home › Cooking › Electric › Whirlpool RCS2012RS 21-Inch Electric Cooktop With Stainless Steel Surface

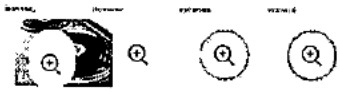

1/5

Whirlpool RCS2012RS 21-Inch Electric Cooktop With Stainless Steel Surface

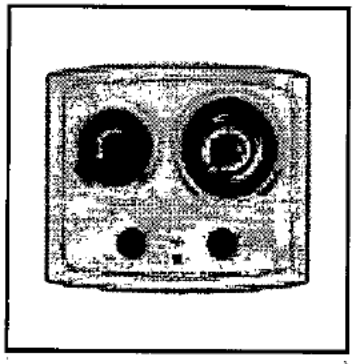

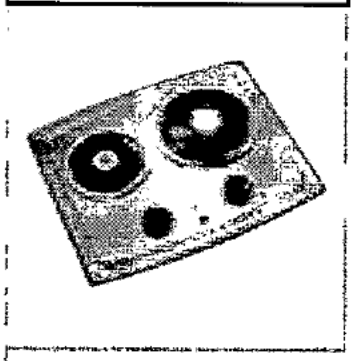

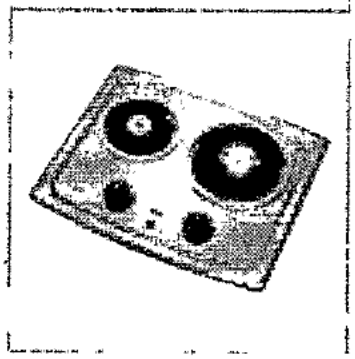

SKU:
RCS2012RS

UPC:
050946997094

AUTHORIZED DEALER

Whirl[redacted]

Black On Stainless

INSTALLATION AND REMOVAL

Enter your zipcode →

Available to Order (i)

1

ADD TO CART

Buy with

Add to Compare

Shipping calculated at checkout.

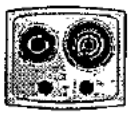

Whirlpool RCS2012RS 21-Inch Electric Cooktop With Stainless Steel Surface

Text Us

ADD TO CART