SOUTHERN CALIFORNIA EDISON
TRANSMISSION AND DISTRIBUTION

Electrical Service Requirements (ESR)

2025— FOURTH QUARTER ISSUE
October 31, 2025

Note: *Printed and downloaded versions of this document are uncontrolled. In the case of a conflict between printed/downloaded and electronic versions of this document, the controlled version published on the Company portal prevails.*

Copyright © 2025 Southern California Edison. All rights reserved.

No part of this document may be reproduced, stored in a retrieval system, or transmitted, in any form or by any means, without the prior written permission of Southern California Edison.

Direct technical questions/comments to:
Email: Standards.Engineering@sce.com

Published by:
Transmission & Distribution • Southern California Edison
Standards & Publications, 1 Innovation Way, Pomona, California 91768-2560

Electrical Service Requirements (ESR)

Revision Summary

2025 Fourth Quarter Issue

Effective Date: October 31, 2025

Overview

The main purpose of this revision summary is to describe new revisions to this manual. (Some or all of the information may have been previously communicated to field personnel by other means.)

Table 1 lists the revisions. Clickable page/sheet numbers link directly to individual revisions or the first of a series of revisions.

Table 2 defines four types of revisions: (1) Admin (Administrative), (2) Technical, (3) New, and (4) Pilot.

Note: **Admin** *and* **Technical** *revisions to existing standards or existing* **Pilot** *projects are identified with change bars* **I** *in the left margin.* **New** *standards (as well as new pilot projects) do not receive change bars. Editorial revisions, such as corrections to spelling, do not receive change bars.*

A Getting Help section provides contact information.

Table 1: Revisions

Chapter	Page	Description	Type
ESR-1	Sheet 27-29	New section 12.9 added to the ESR: Meter Socket Adapter (MSA)	Technical
ESR-3	Sheet 24-25	Figure 3-6: Added Note 9 - Ringless-type meter sockets are not acceptable. Figure 3-7: Added Note 9 - Ringless-type meter sockets are not acceptable.	Amin
ESR-3	Sheet 24	Updated Figure: 3-5 Revise the burial coverage minimum depth from 30" to 24" and replace Concrete Envelope with Concrete Slurry	Admin
ESR-3	Sheet 44	Added Note 15: Ringless-type meter sockets are not acceptable. Added Note 16: The owner or developer must consult with SCE Local Service Office prior to determining the location of service equipment.	Admin
ESR-4	Sheet 1, 8, 13	Replace all instances of Customer-Owned Transformer Room (COTR) with Customer-Owned Transformer Vault Room (COTVR).	Admin
ESR-5	Sheet 5	Clarified language by adding "meter" to specify that ringless-type meter socket enclosures shall not be installed.	Admin
ESR-9	Sheet 8	Updated Note 28: Double personnel doors are required for all hatch-type COTVRs, in addition to the equipment hatch opening.	Admin

Table 2: Revision Types

Type	Definition
Admin	Administrative revisions do not significantly affect design, construction, maintenance or operation of the electrical distribution, substation, and transmission systems. They do not require Standards Review Team (SRT) or management approval; however, they have been approved by other organizations, as appropriate. They may include updates to material codes, updates to references, updates to standards for clarity, or deletions of outdated information.
Technical	Technical revisions are engineering changes to existing standards. They affect the design, construction, maintenance or operation of the electrical distribution, substation, and transmission systems. They require SRT and management approval.
New	Refers to a new standard. New technical standards require SRT and management approval.
Pilot	A *Pilot* is an in-field evaluation of a piece of equipment or work method, with the intention of approving for standardized use. Pilot standards will have a PILOT watermark so that they are easily identified throughout this manual.

Getting Help

Technical Issues

If you have any comments, corrections, questions, or suggestions concerning manual revisions, please contact one of the following individuals at the numbers provided, or click on the name to send an email.

- Standards.Engineering@sce.com

Fernando A. Garcia

Director | Asset Management & Engineering

ESR–1: General Information

TABLE OF CONTENTS

SECTIONS AND SUBSECTIONS			PAGE
1.0	Scope and Purpose		1–3
2.0	Edison Office Locations, Telephone Numbers, and Community Index		1–3
3.0	Energy Management Programs		1–16
	3.1	Residential	1–16
	3.2	Commercial/Industrial/Agricultural	1–16
4.0	Dig Alert		1–16
5.0	Plug-In Electric Vehicles		1–16
	5.1	Customer's Responsibility	1–16
	5.2	Panel/Meter Options	1–17
6.0	Voltage Standards		1–20
	6.1	Standard Distribution Voltages	1–20
	6.2	Customer-Service Voltages	1–20
	6.3	Customer-Utilization Voltages	1–21
7.0	Customer Transformation and Harmonic Interference		1–21
	7.1	High-Voltage Service	1–22
	7.2	Low-Voltage Service	1–22
8.0	Agricultural Power Service — Three-Phase, 240 V and 277/480 V		1–22
	8.1	100 A Service	1–22
	8.2	200 A Service	1–23
	8.3	Above 200 A Service	1–23
9.0	Overhead Service		1–23
	9.1	To Customer's Service and Meter Pole	1–23
	9.2	To Customer's Building or Structure	1–23
10.0	Underground Service		1–23
	10.1	To Customer's Service and Meter Post	1–23
	10.2	To Customer's Building or Structure	1–23
11.0	Service or Meter Switch — General Requirements		1–24
12.0	Customer Generators		1–24
	12.1	Equipment Review	1–25
	12.2	Location and Access	1–25
	12.3	Equipment Marking/Labeling	1–25
	12.4	Prohibited Metering Locations	1–25
	12.5	Switch and Disconnect Requirements	1–26
	12.6	Voltage Standards	1–26
	12.7	Safety-Socket Box with Factory-Installed Test-Bypass	1–26

SECTIONS AND SUBSECTIONS **PAGE**

	12.8	Generation Meter Adapter (GMA)	1–26
	12.9	Meter Socket Adapter (MSA)	1–27
13.0	Short-Circuit Current		1–30
	13.1	10000 A and Below (100–400 Maximum Amperes Self-Contained Type Meter Panels)	1–30
	13.2	Greater than 10000 A—Multi-Family Residential (Three or More Grouped Meters), Commercial, and Industrial	1–30
	13.3	Exceptional Cases	1–30
14.0	Electric and Magnetic Fields		1–30
	14.1	Electric Fields	1–30
	14.2	Magnetic Fields	1–31
	14.3	SCE's Corporate Electric Magnetic Fields Policy	1–31
	14.4	Sources of Magnetic Fields	1–31
	14.5	Magnetic Field Management Techniques	1–33
	14.6	Summary	1–34
15.0	Residential Area Installations		1–35
	15.1	Hazardous Areas by Class and Division	1–35
	15.2	Location of Service Facilities	1–35
	15.3	Electrical Y Seal Conduit Sealing Vertical Fitting and Material Application	1–35
	15.4	Service Cable Replacement	1–35

FIGURES

1–1	Overhead Service	1–18
1–2	Underground Service	1–19
1–5	Sources of Magnetic Fields	1–32
1–6	Meter Panel Locations	1–33
1–7	Magnetic Field Strength Measurements — 1Ø Pad-Mounted Transformer	1–34
1–8	EYS Conduit Sealing Vertical Fitting	1–37

TABLES

1–1	Service Planning Office—Telephone Numbers and Locations	1–4
1–2	Service Center Planning Directory	1–6
1–3	Customer-Service Voltages	1–21
1–4	Customer Utilization Voltages	1–21
1–5	Short-Circuit Current	1–30
1–6	Magnetic Fields from Electrical Appliances	1–32

ESR–1: General Information

1.0 Scope and Purpose

The Electrical Service Requirements (ESR) presented in this document provide detailed amplifications of certain established rules of Southern California Edison (SCE), An Edison International Company, (also referred to as the "Company") pertaining to electrical service connections, together with customers' installations of service wiring and service equipment. These requirements are issued for the guidance and assistance of electrical contractors, engineers, architects, and manufacturers engaged in the installation and design of electrical service wiring and service equipment. As an additional convenience, certain extracts from G.O. 95, Rules for Overhead Line Construction; G.O. 128, Rules for Construction of Underground Electric Supply and Communications Systems, of the California Public Utilities Commission (CPUC) concerning service installations have been included as references.

In localities where no local ordinance is in force and where no provision has been made for inspection by local or other authorities, the Company shall determine if a service wiring installation has been made in a safe and workman-like manner before making a service connection to such installation.

For the purpose of these requirements, the customer or any other person, firm, or corporation making a service wiring installation will be considered the "electrical contractor."

Any unusual situation, not specifically covered in these ESRs, should be referred to the Company Service Planning Office in the location where the service is supplied. Service Planning Offices are located at various Service Centers throughout the SCE territory. To find the telephone number of the Service Planning Office nearest you, see Table 1–1.

2.0 Edison Office Locations, Telephone Numbers, and Community Index

Southern California Edison has an extensive network of Customer Service offices and telephone information numbers to serve builders, developers, and electrical contractors. Table 1–1 is an alphabetical listing of SCE Service Centers with addresses and planning office telephone numbers. Table 1–2 is an alphabetical listing of cities and communities served by the Company and indicates the SCE Service Center responsible for its service. Use this table to identify the SCE Service Center serving the geographic location for which you need assistance. The corresponding telephone number for the Service Center can be found in Table 1–1. Call this number when information is needed for new construction, relocation of metering facilities, overhead or underground wiring, temporary power poles, or any question or request that may require a technical response regarding these subjects. When calling these locations please ask for the service planner for your specific project location.

If you need additional information or technical assistance relating to these requirements, contact Gilbert Aceves at (909) 329-9445 or e-mail him at gilbert.aceves@sce.com. For administrative inquiries, such as new manuals, revisions, and so forth, call (909) 548-7108 or FAX (909) 548-7050. In addition, you may address your technical questions to the attention of Gilbert Aceves at:

Southern California Edison
Transmission and Distribution, Construction Methods
14005 S. Benson Ave.
Chino, CA 91710-7026

The *General Service* number, (800) 655-4555, is provided for establishing electrical service in a customer's name, meter reading, and billing questions, requests for discontinuing service, information regarding delinquent accounts, and questions of a general nature. Information is also available on our Web site: http://www.sce.com/.

Table 1–1: Service Planning Office—Telephone Numbers and Locations

Service Center	Location	Telephone/ FAX Number
Antelope Valley	42060 10th Street West, Lancaster, CA 93534-4349	(661) 726-5617 FAX (661) 726-5680
Arrowhead	26364 Pine Avenue, Rimforest, CA 92378	(909) 336-4204 FAX (909) 336-4220
Barstow	30553 Rimrock Road, Barstow, CA 92311	(760) 252-6416 FAX (760) 252-6406
Bishop	4000 West Line Street, Bishop, CA 93514	(626) 302-5542 FAX (760) 873-2921
Blythe	505 West 14th Avenue, Blythe, CA 92225	(760) 921-1605 FAX (760) 922-0662
Catalina Island	2800 East Willow Street, Long Beach, CA 90806	(562) 981-8237 FAX (562) 981-8289
Compton	P.O. Box 4699, Compton, CA 90224 1924 Cashdan Street, Compton, CA 90224	(310) 608-5023 FAX (310) 608-5033
Covina	800 West Cienega, San Dimas, CA 91773	(909) 592-3709 FAX (909) 357-6185
Foothill	7951 Redwood Avenue, Fontana, CA 92336	(909) 357-6516 FAX (909) 357-6113
Fullerton	1851 West Valencia Drive, Fullerton, CA 92833	(714) 870-3225 FAX (714) 870-3284
Huntington Beach	7333 Bolsa Avenue, Westminster, CA 92683	(626) 302-3039 FAX (714) 895-0188
Kernville	120 Woodland Drive, Wofford Heights, CA 93285	(760) 376-8008 FAX (760)-376-4973
Long Beach	2800 East Willow Street, Long Beach, CA 90806	(562) 981-8237 FAX (562) 981-8289
Mammoth	P.O. Box 7329 3001 Chateau Road, Mammoth Lakes, CA 93546	(626) 302-5542 FAX (760) 924-4823
Monrovia	1440 South California Street, Monrovia, CA 91016	(626) 303-8489 FAX (626) 303-8406
Montebello	1000 Potrero Grande Drive, Monterey Park, CA 91755	(323) 720-5220 FAX (323) 720-5252
Ontario	1351 East Francis Street, Ontario, CA 91761	(909) 930-8591 FAX (909) 930-8438
Palm Springs	36100 Cathedral Canyon Drive, Cathedral City, CA 92234	(760) 202-4286 FAX (760) 202-4294
Redlands	287 Tennessee Street, Redlands, CA 92373	(909) 307-6791 FAX (909) 307-6714
Ridgecrest	510 South China Lake Boulevard, Ridgecrest, CA 93555	(626) 302-5542 FAX (760) 375-1554
Saddleback	14155 Bake Parkway, Irvine, CA 92618	(949) 458-4416 FAX (949) 458-4472
Menifee	26100 Menifee Road, Menifee, CA 92585	(951) 928-8290 FAX (951) 928-8377

Table 1–1: Service Planning Office—Telephone Numbers and Locations *(Continued)*

Service Center	Location	Telephone/ FAX Number
San Joaquin Valley	P.O. Box 900, Tulare, CA 93275 2425 South Blackstone Avenue, Tulare, CA 93274	(559) 685-3235 FAX (559) 685-3287
Santa Ana	1241 South Grand Avenue, Santa Ana, CA 92705	(714) 973-5653 FAX (714) 973-5790
Santa Barbara	103 David Love Place, Goleta, CA 93117	(805) 683-5211 FAX (805) 683-5293
Santa Monica	1721 22nd Street, Santa Monica, CA 90404	(310) 315-3271 FAX (310) 315-3217
Shaver Lake	P.O. Box 29, Shaver Lake, CA 93664 41694 Dinkey Creek Road, Shaver Lake, CA 93664	(559) 841-3191 FAX (559) 841-3178
South Bay	505 Maple Avenue, Torrance, CA 90503 P.O. Box 2944, Torrance, CA 90509-2944	(310) 783-9389 FAX (310) 783-9388
Tehachapi	421 West “J” Street, Tehachapi, CA 93561	(661) 823-2599 FAX (661) 823-2511
Thousand Oaks	3589 Foothill Drive, Thousand Oaks, CA 91361	(805) 494-7040 FAX (805) 494-7008
Valencia	25625 West Rye Canyon Road, Valencia, CA 91355	(661) 257-8255 FAX (661) 257-8259
Ventura	10060 Telegraph Road, Ventura, CA 93004	(805) 654-7444 FAX (805) 654-7323
Victorville	12353 Hesperia Road, Victorville, CA 92392	(760) 951-3219 FAX (760) 951-3159
Whittier	9901 Geary Avenue, Santa Fe Springs, CA 90670	(562) 903-3123 FAX (562) 903-3174
Wildomar	24487 Prielipp Drive, Wildomar, CA 92595	(951) 249-8301 FAX (951) 249-8636
Yucca Valley	6999 Old Woman Springs Road, Yucca Valley, CA 92284	(760) 369-5412 FAX (760) 369-5409

Table 1–2: Service Center Planning Directory *(Sheet 1 of 11)*

City	Service Center
Acton	Antelope Valley
Acton	Valencia
Adelanto	Victorville
Aerial Acres	Ridgecrest
Agoura	Thousand Oaks
Agoura Hills	Thousand Oaks
Agua Dulce	Valencia
Agua Fria	Arrowhead
Aguanga	Wildomar
Alberhill	Wildomar
Alessandro	Menifee
Alhambra	Montebello
Alpine Forest	Antelope Valley
Alpine Glen	Arrowhead
Alpine Village	San Joaquin Valley
Alta Loma	Foothill
Alta Loma	Ontario
Altadena	Monrovia
Amberton	Ventura
Amboy	Yucca Valley
Anaheim	Fullerton
Anaheim	Santa Ana
Angelus Oaks	Redlands
Antelope Acres	Antelope Valley
Anza	Menifee
Apple Valley	Victorville
Arcadia	Monrovia
Argus	Ridgecrest
Arlington	Ontario
Armona	San Joaquin Valley
Arnold Heights	Menifee
Arrowbear Lake	Arrowhead
Arrowhead Highlands	Arrowhead
Arrowhead View	Arrowhead
Artesia	Long Beach
Ash Mountain	San Joaquin Valley
Atolia	Ridgecrest
Atwood	Fullerton
Auberry	Shaver Lake
Avalon	Catalina
Azusa	Covina

City	Service Center
Azusa	Monrovia
Bagdad	Yucca Valley
Baker	Barstow
Bakersfield	San Joaquin Valley
Balance Rock	Kernville
Balboa	Huntington Beach
Balboa Island	Huntington Beach
Baldwin Hills	South Bay
Baldwin Hills	Santa Monica
Baldwin Park	Monrovia
Banning	Redlands
Banning	Palm Springs
Banning	Foothill
Bardsdale	Ventura
Barstow	Barstow
Barton Flats	Redlands
Bassett	Covina
Bear Valley Springs	Antelope Valley
Beaumont	Redlands
Bell	Compton
Bell Canyon	Thousand Oaks
Bell Gardens	Compton
Bellflower	Compton
Belltown	Foothill
Belmont Shore	Long Beach
Belvedere	Montebello
Benton	Bishop
Beverly Hills	Santa Monica
Big Bear Lake	Redlands
Big Bear Lake	Victorville
Big Creek	Shaver Lake
Big Pine	Bishop
Big Pines Playground	Victorville
Big Tujunga Canyon	Monrovia
Bishop	Bishop
Bishop Creek	Bishop
Bixby Knolls	Long Beach
Bloomington	Foothill
Blue Cut	Foothill
Blue Jay	Arrowhead
Blythe	Blythe

Table 1–2: Service Center Planning Directory *(Sheet 2 of 11)*

City	Service Center
Bodfish	Kernville
Bodie	Bishop
Boron	Ridgecrest
Bouquet Canyon	Valencia
Box Canyon	Thousand Oaks
Bradbury	Monrovia
Brea	Fullerton
Bridgeport	Mammoth
Bryman	Victorville
Bryn Mawr	Redlands
Buena Park	Fullerton
Burnt Mill Canyon	Arrowhead
Burnt Mill Heights	Arrowhead
Burtons Camp	Antelope Valley
Cabazon	Palm Springs
Cadiz	Yucca Valley
Cadiz Summit	Yucca Valley
Cajon	Foothill
Calabasas	Thousand Oaks
Calico	Barstow
Caliente	Antelope Valley
Caliente	Kernville
California City	Ridgecrest
California Hot Springs	Kernville
California Hot Springs	San Joaquin Valley
Calimesa	Redlands
Camarillo	Thousand Oaks
Camarillo	Ventura
Camarillo Heights	Ventura
Camp Angelus	Redlands
Camp Nelson	San Joaquin Valley
Camp Sabrina	Bishop
Canoga Park	Thousand Oaks
Cantil	Ridgecrest
Canyon Country	Valencia
Canyon Lake	Wildomar
Carbon Canyon	North Orange Country
Carbon Canyon	Ontario
Carpinteria	Santa Barbara
Carson	Compton
Casa Diablo Hot Springs	Bishop

City	Service Center
Casitas Springs	Ventura
Castaic	Valencia
Catalina	Long Beach
Cathedral City	Palm Springs
Cedar Glen	Arrowhead
Cedar Pine	Arrowhead
Cedar Slope	San Joaquin Valley
Cedarpines Park	Arrowhead
Cerritos	Long Beach
Chalfant	Bishop
Chambless	Yucca Valley
Chapman Woods	Monrovia
Charter Oak	Covina
Chatsworth	Thousand Oaks
Cherry Valley	Redlands
Chilao	Monrovia
China Lake	Ridgecrest
Chino	Ontario
Chino Hills	Ontario
Cima	Barstow
City Terrace	Montebello
Claremont	Covina
Claremont	Ontario
Colton	Redlands
Commerce	Compton
Compton	Compton
Conejo Valley	Thousand Oaks
Convict Lake	Bishop
Corcoran	San Joaquin Valley
Cornell	Thousand Oaks
Corona	Ontario
Corona Del Mar	Huntington Beach
Coronita	Ontario
Coso	Ridgecrest
Costa Mesa	Huntington Beach
Coto de Caza	Saddleback
Cotton Center	San Joaquin Valley
Covina	Covina
Covina	Monrovia
Cowan Heights	Santa Ana
Crest Park	Arrowhead

Table 1–2: Service Center Planning Directory *(Sheet 3 of 11)*

City	Service Center
Crestline	Arrowhead
Crestmore	Foothill
Crestview	Bishop
Crowley Lake	Bishop
Cucamonga	Ontario
Cudahy	Compton
Culver City	Santa Monica
Cuyama Valley	Antelope Valley
Cypress	Fullerton
Daggett	Barstow
Danby	Yucca Valley
Death Valley Junction	Ridgecrest
Deer Lodge Park	Arrowhead
Del Rosa	Redlands
Del Sur	Antelope Valley
Delano	San Joaquin Valley
Desert Center	Blythe
Desert Hot Springs	Palm Springs
Desert Lake	Ridgecrest
Desert Springs	Victorville
Devore	Foothill
Diamond Bar	Covina
Dinkey Creek	Shaver Lake
Dos Palmas	Palm Springs
Downey	Whittier
Doyle Springs	San Joaquin Valley
Duarte	Monrovia
Ducor	San Joaquin Valley
Dunmovin	Ridgecrest
Earlimart	San Joaquin Valley
East Highlands	Redlands
East Los Angeles	Montebello
East Pasadena	Monrovia
East San Gabriel	Montebello
East Tustin	Santa Ana
East Whittier	Whittier
Eastvale	Ontario
Eden Hot Springs	Menifee
Edgemont	Menifee
Edwards	Antelope Valley
Edwards	Ridgecrest

City	Service Center
El Cerrito	Ontario
El Mirage	Victorville
El Modena	Santa Ana
El Monte	Montebello
El Porto	South Bay
El Rio	Ventura
El Segundo	South Bay
El Toro	Saddleback
Elizabeth Lake Ranch Club	Antelope Valley
Ellwood	Santa Barbara
Elsinore	Wildomar
Escondido Canyon	Valencia
Essex	Yucca Valley
Etiwanda	Foothill
Exeter	San Joaquin Valley
Fallbrook	Wildomar
Fallsvale	Redlands
Farmersville	San Jacinto Valley
Fawnskin	Victorville
Fenner	Yucca Valley
Fillmore	Ventura
Firestone Park	Compton
Flintridge	Monrovia
Florence	Compton
Fontana	Foothill
Forest Home	Redlands
Forest Park	Valencia
Fort Irwin	Barstow
Foster Park	Ventura
Fountain Springs	San Joaquin Valley
Fountain Valley	Huntington Beach
Frazier Park	Antelope Valley
Fremont Valley	Ridgecrest
Fresno	Shaver Lake
Friendly Hills	Whittier
Friendly Valley	Valencia
Fullerton	Fullerton
Furnace Creek	Ridgecrest
Garden City Acres	Ventura
Garden Grove	Santa Ana
Gardena	South Bay

Table 1–2: Service Center Planning Directory *(Sheet 4 of 11)*

City	Service Center
Garlock	Ridgecrest
Garnet	Palm Springs
Gaviota	Santa Barbara
Giant Forest	San Joaquin Valley
Gilman Hot Springs	Menifee
Glen Avon	Foothill
Glen Helen Ranch	Foothill
Glen Ivy	Wildomar
Glendora	Covina
Glenville	Kernville
Goffs	Yucca Valley
Golden Hills	Antelope Valley
Goldstone	Barstow
Goleta	Santa Barbara
Goodhope	San Jacinto Valley
Gorman	Antelope Valley
Goshen	San Joaquin Valley
Grand Terrace	Redlands
Grandview	Barstow
Grandview Palos Verdes	South Bay
Grangeville	San Joaquin Valley
Granite Station	Kernville
Grass Valley	Arrowhead
Green Acres	Menifee
Green Valley	Antelope Valley
Green Valley Lake	Arrowhead
Greenhorn	Kernville
Guasti	Ontario
Guyama	Thousand Oaks
Hacienda Heights	Covina
Hacienda Heights	Whittier
Hammil	Bishop
Hanford	San Joaquin Valley
Harbor City	Compton
Harbor City	South Bay
Harvard	Barstow
Haskell Canyon	Valencia
Hasley Canyon	Valencia
Havasu Heights	Blythe
Havasu Lake	Blythe
Havasu Landing	Blythe

City	Service Center
Havasu Palms	Blythe
Havilah	Kernville
Hawaiian Gardens	Long Beach
Hawes	Barstow
Hawthorne	South Bay
Hector	Barstow
Helendale	Victorville
Hemet	Menifee
Hermosa Beach	South Bay
Hesperia	Victorville
Hidden Hills	Thousand Oaks
Hidden Valley	Antelope Valley
Hidden Valley	Thousand Oaks
Highgrove	Redlands
Highland	Redlands
Hinkley	Barstow
Hodge	Barstow
Hollydale	Compton
Hollywood by the Sea	Ventura
Hollywood Riviera	South Bay
Home Gardens	Ontario
Homeland	Menifee
Homestead Area	Antelope Valley
Honby	Valencia
Hope Ranch	Santa Barbara
Horseshoe Bend	Arrowhead
Hueneme Bay	Ventura
Hungry Valley	Antelope Valley
Huntington Beach	Huntington Beach
Huntington Harbour	Huntington Beach
Huntington Lake	Shaver Lake
Huntington Park	Compton
Idyllwild	Menifee
Indian Hills	Ontario
Indian Wells	Palms Springs
Industry	Covina
Industry	Montebello
Industry	Whittier
Inglewood	South Bay
Inyokern	Kernville
Inyokern	Ridgecrest

Table 1–2: Service Center Planning Directory *(Sheet 5 of 11)*

City	Service Center
Irvine	Saddleback
Irwindale	Covina
Irwindale	Monrovia
Isla Vista	Santa Barbara
Ivanhoe	San Joaquin Valley
Ivanpah	Barstow
Jack Ranch	San Joaquin Valley
Jasmine	San Joaquin Valley
Johannesburg	Ridgecrest
Johnson Valley	Yucca Valley
Johnsondale	Kernville
Joshua Tree	Yucca Valley
June Lake	Mammoth
Kagel Canyon	Valencia
Kaweah	San Joaquin Valley
Keeler	Bishop
Keen Camp	Menifee
Keene	Antelope Valley
Kelso	Barstow
Kelso	Yucca Valley
Kern River	Kernville
Kernvale	Kernville
Kernville	Kernville
Klondike	Barstow
Kramer	Ridgecrest
La Canada	Monrovia
La Conchita	Ventura
La Crescenta	Monrovia
La Habra	Whittier
La Habra	Fullerton
La Habra Heights	Fullerton
La Mirada	Whittier
La Mirada	Fullerton
La Palma	Fullerton
La Puente	Covina
La Sierra	Ontario
La Verne	Covina
Ladera Heights	South Bay
Laguna Beach	Saddleback
Laguna Hills	Saddleback
Laguna Niguel	Saddleback

City	Service Center
Lake Arrowhead	Arrowhead
Lake Elizabeth Ranch Club	Antelope Valley
Lake Elsinore	Wildomar
Lake Forest	Saddleback
Lake Havasu	Blythe
Lake Hughes	Antelope Valley
Lake Isabella	Kernville
Lake Lindero	Thousand Oaks
Lake Los Angeles	Antelope Valley
Lake Mathews	Menifee
Lake of the Woods	Valencia
Lake Sherwood	Thousand Oaks
Lake Silverwood	Arrowhead
Lake Tamarisk	Blythe
Lakebrook Park	Arrowhead
Lakeland Village	Wildomar
Lakeshore	Shaver Lake
Lakeview	Menifee
Lakewood	Long Beach
Lancaster	Antelope Valley
Landers	Yucca Valley
Larchmont	Arrowhead
Las Posas Estate	Ventura
Lawndale	South Bay
Lebec	Antelope Valley
Lee Vining	Mammoth
Leisure World	Huntington Beach
Leliter	Ridgecrest
Lemon Cove	San Joaquin Valley
Lemon Heights	Santa Ana
Lemoore	San Joaquin Valley
Lennox	South Bay
Lenwood	Barstow
Leona Valley	Antelope Valley
Lido Isle	Huntington Beach
Limoneira	Ventura
Lindcove	San Joaquin Valley
Lindsay	San Joaquin Valley
Linnell	San Joaquin Valley
Little Lake	Ridgecrest
Little Tujunga	Valencia

Table 1–2: Service Center Planning Directory *(Sheet 6 of 11)*

City	Service Center
Littlerock	Antelope Valley
Live Oaks Acres	Ventura
Llano	Antelope Valley
Llano	Victorville
Lockwood Valley	Antelope Valley
Loma Linda	Redlands
Lomita	South Bay
Lone Pine	Bishop
Long Beach	Compton
Long Beach	Long Beach
Lopez Canyon	Valencia
Los Alamitos	Long Beach
Los Angeles	Compton
Los Angeles	Santa Monica
Los Angeles	South Bay
Los Cerritos	Long Beach
Los Nietos	Whittier
Los Serranos	Ontario
Lucerne Valley	Yucca Valley
Lucerne Valley	Victorville
Ludlow	Barstow
Luring Pines	Arrowhead
Lynn Ranch	Thousand Oaks
Lynwood	Compton
Lytle Creek	Foothill
Malibu Beach	Thousand Oaks
Malibu Lake	Thousand Oaks
Malibu West	Thousand Oaks
Mammoth Lakes	Mammoth
Mammoth Mountain	Mammoth
Mandalay Bay	Ventura
Manhattan Beach	South Bay
Manix	Barstow
March Air Force Base	Menifee
Maricopa	Ventura
Marina Del Rey	Santa Monica
Maywood	Compton
McFarland	San Joaquin Valley
McGee Creek	Bishop
McMillan Manor	Ventura

City	Service Center
Meadowbrook	Arrowhead
Meadowbrook Heights	Menifee
Meiners Oaks	Ventura
Menifee	Menifee
Mentone	Redlands
Mesa Verde	Blythe
Mesquite	Barstow
Midway	Barstow
Midway City	Huntington Beach
Mint Canyon	Valencia
Mira Loma	Foothill
Mira Monte	Ventura
Miraleste	South Bay
Mission Viejo	Saddleback
Modjeska	Saddleback
Mojave	Tehachapi
Mojave	Ridgecrest
Monolith	Antelope Valley
Monrovia	Monrovia
Montalvo	Ventura
Montclair	Ontario
Monte Nido	Thousand Oaks
Montebello	Montebello
Montebello	Compton
Montecito	Santa Barbara
Monterey Park	Montebello
Montrose	Monrovia
Moorpark	Thousand Oaks
Moorpark	Ventura
Moorpark Home Acres	Thousand Oaks
Moreno	Menifee
Morningside Park	South Bay
Morongo Indian Reservation	Palm Springs
Morongo Valley	Yucca Valley
Mount Baldy	Foothill
Montclair	Foothill
Mount Wilson	Monrovia
Mountain Center	Menifee
Mountain Pass	Barstow
Mountain Springs	Yucca Valley
Mupu	Ventura

Table 1–2: Service Center Planning Directory *(Sheet 7 of 11)*

City	Service Center
Mead Valley	Menifee
Murrieta	Wildomar
Murrieta Hot Springs	Wildomar
Muscoy	Redlands
Naples	Long Beach
Narod	Ontario
Needles	Yucca Valley
Needles Landing	Blythe
Neighbors	Blythe
Newberry Springs	Barstow
Newbury Park	Thousand Oaks
Newhall	Valencia
Newport Beach	Huntington Beach
Newport Coast	Huntington Beach
Nipton	Barstow
Norco	Ontario
North Edwards	Ridgecrest
North Fork Saddle	Valencia
North Long Beach	Long Beach
North Oaks	Valencia
North Palm Springs	Palm Springs
North Ventura	Ventura
Norton Air Force Base	Redlands
Norwalk	Whittier
Nuevo	Menifee
Nyeland Acres	Ventura
Oak Glen	Redlands
Oak Hills	Victorville
Oak View	Ventura
Oakbrook Village	Thousand Oaks
Ocean Park	Santa Monica
Ojai	Ventura
Olancha	Ridgecrest
Olive	Santa Ana
Ontario	Ontario
Ontario	Foothill
Onyx	Kernville
Orange	Santa Ana
Orange Park Acres	Santa Ana
Oro Grande	Victorville
Oxnard	Ventura

City	Service Center
Muroc	Ridgecrest
Oxnard Shores	Ventura
Pacoima Canyon	Valencia
Pahrump	Barstow
Painted Cave	Santa Barbara
Painted Hills	Palm Springs
Palm Desert	Palm Springs
Palm Desert Country Club	Palm Springs
Palm Springs	Palm Springs
Palm Springs Oasis	Palm Springs
Palm Wells	Yucca Valley
Palmdale	Antelope Valley
Palo Verde	Blythe
Palos Verdes Estates	South Bay
Palos Verdes Pennisula	South Bay
Panorama Heights	Kernville
Panorama Park	Kernville
Paradise Camp	Santa Barbara
Paramount	Compton
Park El Moreno	Menifee
Parker Dam	Blythe
Pasadena	Monrovia
Patton	Redlands
Pearblossom	Antelope Valley
Pearsonville	Ridgecrest
Pechanga Indian Reservation	Wildomar
Pedley	Foothill
Pelissier Village	Whittier
Perris	Ontario
Perris	Menifee
Phelan	Victorville
Pico Canyon	Valencia
Pico Rivera	Whittier
Pico Rivera	Montebello
Pine Cove	Menifee
Pine Flat	San Joaquin Valley
Pine Mountain Club	Valencia
Pinon Hills	Victorville
Pinon Pines	Valencia
Pioneer Point	Ridgecrest
Pioneertown	Yucca Valley

Table 1–2: Service Center Planning Directory *(Sheet 8 of 11)*

City	Service Center
Oxnard Beaches	Ventura
Pixley	San Joaquin Valley
Placentia	Fullerton
Placerita Canyon	Valencia
Plainview	San Joaquin Valley
Plant 42	Antelope Valley
Point Mugu	Ventura
Point of Rocks	Ridgecrest
Pomona	Covina
Pomona	Ontario
Pond	San Joaquin Valley
Ponderosa	San Joaquin Valley
Poplar	San Joaquin Valley
Poppet Flats	Menifee
Port Hueneme	Ventura
Portal Heights	Antelope Valley
Porterville	San Joaquin Valley
Portugese Bend	South Bay
Posey	Kernville
Poso Park	Kernville
Potrero Heights	Montebello
Quail Valley	Menifee
Quartz Hill	Antelope Valley
Rainbow Canyon	Wildomar
Rancho California	Wildomar
Rancho Cucamonga	Foothill
Rancho Cucamonga	Ontario
Rancho Mirage	Palm Springs
Rancho Palos Verdes	South Bay
Rancho Santa Margarita	Saddleback
Rancho Sespe	Ventura
Randsburg	Ridgecrest
Reche Canyon	Redlands
Red Hill	Santa Ana
Red Mountain	Wildomar
Red Mountain	Ridgecrest
Red Rover Canyon	Valencia
Redlands	Redlands
Redondo Beach	South Bay
Refugio	Santa Barbara
Rialto	Foothill

City	Service Center
Piru	Valencia
Ridgecrest	Ridgecrest
Rimforest	Arrowhead
Ripley	Blythe
Riverside	Redlands
Riverside	Ontario
Riverside	Menifee
Roads End	Blythe
Rolling Hills	South Bay
Rolling Hills Estates	South Bay
Romoland	Menifee
Rosamond	Antelope Valley
Rosemead	Montebello
Rossmoor	Long Beach
Rowco	Arrowhead
Rowland Heights	Covina
Rubidoux	Foothill
Running Springs	Arrowhead
Ryan	Ridgecrest
Sage	Wildomar
Saltdale	Ridgecrest
Saltus	Yucca Valley
San Bernardino	Redlands
San Dimas	Covina
San Dimas Canyon	Covina
San Fernando	Valencia
San Francisquito Canyon	Valencia
San Gabriel	Monrovia
San Gabriel	Montebello
San Jacinto	Menifee
San Manuel Indian Reservation	Redlands
San Marino	Monrovia
San Moritz	Arrowhead
San Pedro	South Bay
San Sevaine Peak	Foothill
Sand Canyon	Valencia
Santa Ana	Santa Ana
Santa Ana	Saddleback
Santa Barbara	Santa Barbara
Santa Clarita	Valencia
Santa Fe Springs	Whittier

Table 1–2: Service Center Planning Directory *(Sheet 9 of 11)*

City	Service Center
Richgrove	San Joaquin Valley
Santa Paula	Ventura
Santa Rosa Valley	Ventura
Santa Susana	Thousand Oaks
Saticoy	Ventura
Saugus	Valencia
Scotland	Foothill
Scotty's Castle	Ridgecrest
Seal Beach	Huntington Beach
Seal Beach	Long Beach
Searles	Ridgecrest
Sedco	Wildomar
Seeley Flat	Arrowhead
Seminole Hot Springs	Thousand Oaks
Sequoia Crest	San Joaquin Valley
Sequoia National Park	San Joaquin Valley
Seven Oaks	Redlands
Shaver Lake	Shaver Lake
Shosone	Barstow
Siberia	Barstow
Sierra Madre	Monrovia
Signal Hill	Long Beach
Silver Strand	Ventura
Silverado	Saddleback
Simi Valley	Thousand Oaks
Sky Forest	Arrowhead
Skyland	Arrowhead
Sleepy Valley	Valencia
Smiley Park	Arrowhead
Snow Valley	Arrowhead
Snowcreek	Palm Springs
South San Gabriel	Montebello
Soboba Hot Springs	Menifee
Soledad Canyon	Valencia
Solemint	Valencia
Solromar	Thousand Oaks
Somis	Thousand Oaks
Somis	Ventura
South El Monte	Montebello
South Gate	Compton
South Glen Avon	Ontario

City	Service Center
Santa Monica	Santa Monica
South Pasadena	Monrovia
South Whittier	Whittier
Springville	San Joaquin Valley
Stallion Springs	Antelope Valley
Stanton	Fullerton
Stovepipe Wells	Ridgecrest
Strathmore	San Joaquin Valley
Strawberry Flats	Arrowhead
Sugarload	Kernville
Sulphur Mtn. Springs	Ventura
Summerland	Santa Barbara
Summit	Arrowhead
Summit	Victorville
Summit Valley	Victorville
Sun City	Menifee
Sun Village	Antelope Valley
Sungold	Whittier
Sunland	Monrovia
Sunny Slope	Foothill
Sunnymead	Menifee
Sunnyslope	Monrovia
Sunset Beach	Huntington Beach
Sunset Hills	Thousand Oaks
Sunset Park	Arrowhead
Surfside	Huntington Beach
Susana Knolls	Thousand Oaks
Switzerland	Arrowhead
Tajiguas	Santa Barbara
Tecopa	Barstow
Tehachapi	Tehachapi
Temecula	Wildomar
Temescal Canyon	Menifee
Temple City	Monrovia
Terminal Island	Long Beach
Terra Bella	San Joaquin Valley
Teviston	San Joaquin Valley
Thousand Oaks	Thousand Oaks
Three Points	Antelope Valley
Three Rivers	San Joaquin Valley
Tick Canyon	Valencia

Table 1–2: Service Center Planning Directory *(Sheet 10 of 11)*

City	Service Center
South Laguna	Saddleback
Toms Place	Bishop
Tonyvile	San Joaquin Valley
Topanga Canyon	Thousand Oaks
Torrance	Compton
Torrance	South Bay
Trabuco	Saddleback
Trona	Ridgecrest
Tulare	San Joaquin Valley
Tule Indian Reservation	San Joaquin Valley
Tustin	Santa Ana
Twentynine Palms	Yucca Valley
Twin Lakes	Thousand Oaks
Twin Lakes Bridgeport	Bishop
Twin Lakes Mammoth	Bishop
Twin Peaks	Arrowhead
U.S. Marine Corps	Barstow
Universal City	Valencia
Upland	Ontario
Val Verde	Menifee
Val Verde Park	Valencia
Valencia	Valencia
Valinda	Covina
Valle Vista	Menifee
Valley of Enchantment	Arrowhead
Valleyview Park	Arrowhead
Valyermo	Antelope Valley
Vasquez Canyon	Valencia
Venice	Santa Monica
Ventucopa	Ventura
Ventura	Santa Barbara
Ventura	Ventura
Verdemont	Redlands
Veterans Hospital	Santa Monica
Victorville	Victorville
View Park	South Bay
Villa Park	Santa Ana
Virginia Colony	Thousand Oaks
Visalia	San Joaquin Valley
Wagon Wheel	Ventura
Walker Basin	Kernville

City	Service Center
Tipton	San Joaquin Valley
Walnut Park	Compton
Walteria	South Bay
Warm Springs Canyon	Valencia
Warner Tract	Wildomar
Waterman Canyon	Redlands
Waukena	San Joaquin Valley
Weldon	Kernville
West Covina	Covina
West Hollywood	Santa Monica
West Palm Springs	Palm Springs
West Riverside	Ontario
Westend	Ridgecrest
Westlake Village	Thousand Oaks
Westminster	Huntington Beach
Wheelers Hot Springs	Ventura
Whitewater	Palm Springs
Whittier	Montebello
Whittier	Whittier
Whittier	Fullerton
Whittwood	Whittier
Wildomar	Wildomar
Willow Springs	Antelope Valley
Willowbrook	Compton
Wilmington	South Bay
Wilmington	Long Beach
Winchester	Menifee
Windsor Hills	South Bay
Wofford Heights	Kernville
Woodcrest	Menifee
Woodlake	San Joaquin Valley
Woodland Hills	Thousand Oaks
Woodville	San Joaquin Valley
Woody	San Joaquin Valley
Wrightwood	Victorville
Yates Well	Barstow
Yermo	Barstow
Yettem	San Joaquin Valley
Yorba Linda	Fullerton
Walnut Park	Compton
Walteria	South Bay

Table 1–2: Service Center Planning Directory ***(Sheet 11 of 11)***

City	Service Center
Walnut	Covina
Yosemite	Bishop
Yucaipa	Redlands
Yucca Valley	Victorville

City	Service Center
Warm Springs Canyon	Valencia
Yucca Valley	Yucca Valley
Zuma Beach	Thousand Oaks

3.0 Energy Management Programs

Southern California Edison offers several energy management programs tailored to assist residential, commercial, industrial, and agricultural customers in minimizing energy costs. For specific information regarding these programs, please call (800) 990-7788 or (800) 655-4555. Information is also available on our Web site: http://www.sce.com/.

3.1 Residential

Customer Assistance Programs*:* Edison's Customer Assistance Programs (CAPs) are designed to help low-income customers conserve energy and control their electricity costs. Renters and homeowners may qualify. To be eligible, Edison customers must meet specific income guidelines established by the CPUC. For more information, please call (800) 736-4777.

3.2 Commercial/Industrial/Agricultural

New Construction*:* Edison's New Construction program is targeted to builders, developers, contractors, engineers, and architects, and promotes the benefits of designing energy efficiency into projects. Incentives may be offered for energy-efficient space conditioning equipment, daylighting controls, building envelopes, and control systems which exceed state-mandated standards in California.

4.0 Dig Alert

State of California Government Code 4216 mandates that anyone doing excavation work shall call at least two working days prior to commencement of any excavation.[1/] If you are performing this type of work in California or Nevada, please call Underground Service Alert at (811) or (800) 227-2600.

5.0 Plug-In Electric Vehicles

Southern California Edison offers special electric rates and information to purchasers and operators of new Plug-In Electric Vehicles (PEVs). Electric Vehicles are defined as vehicles powered by electric motors which are licensed for street use. The purpose of this section is to assist SCE's customers to understand the role and requirements regarding how residential and commercial customers can become PEV ready.

5.1 Customer's Responsibility

Prior to discussing whether to elect an EV rate, customers will need to consult with a licensed electrician to determine whether their panel is appropriately sized to handle the increased load. The customer shall notify SCE of the increase of load. This is to allow the Company to assess its electrical infrastructure serving the location and determine if upgrades are necessary. It is the responsibility of the customer to ensure that the electrical

[1/] This is to prevent damage to underground equipment.

wiring and all required PEV equipment is installed according to the appropriate codes, regulations, SCE's Electric Service Requirements and properly permitted by the local authority having jurisdiction.

5.2 Panel/Meter Options

If the customer elects to keep their existing Residential D rate, they may not need to replace their existing panel to charge their PEV at their residence. The customer will have two panel choices:

1. Use their existing panel because adequate power capacity exists.
2. Upgrade their panel to provide additional power capacity.

Customers should contact the local Service Planning Office for details, or contact SCE's EV information hotline at (800) 366-7766 for assistance.

For information about the different rate choices, please access SCE's website at http://www.sce.com/ and access the sections about rates in the SCE Tariff Books under Regulatory Information.

Below are two options for SCE overhead fed service panels. The appropriate option will depend on the customer's panel choice.

Figure 1–1: Overhead Service

Residential

Below are two options for SCE underground fed service panels. The appropriate option will depend on the customer's panel choice.

Figure 1–2: Underground Service

Residential

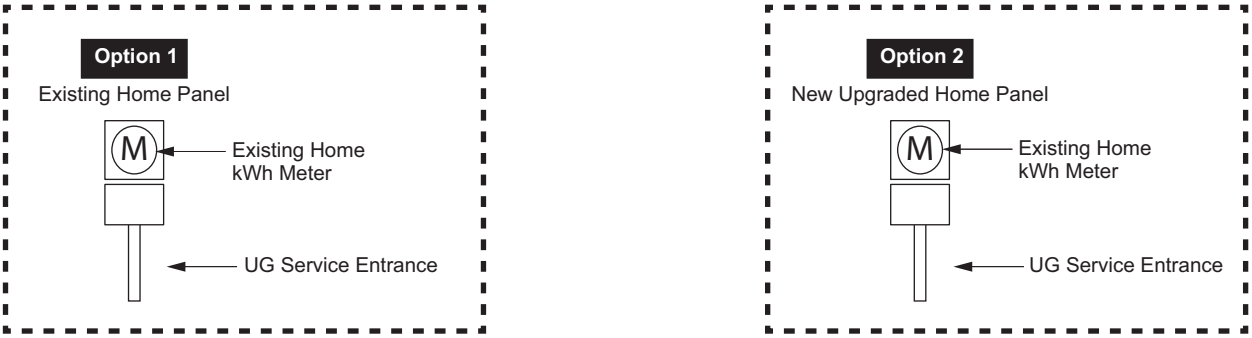

6.0 Voltage Standards

6.1 Standard Distribution Voltages

The Company will supply the following standard nominal distribution voltages to new service installations. New service installations that utilize delta-wye grounded transformers are required to bring the fourth wire to the service panel.

- **Single Phase** — 120 V; 120/240 V; 240 V; 240/480 V; and, depending on the location, 120/208 V; 2400 V; 12000 V; or 16500 V.
- **Three Phase** — 120/208 V; 240 V; 277/480-wye; 2400 V; 4160 V; and, depending on the location, 4800 V; 12000 V; 14400/24900 V; 13800 V; 16500 V; or 33000 V.

Exceptions:

A. 120/240 V four-wire delta will only be supplied under special conditions. Contact the Company local Service Planning Office for details.

B. Existing 480 V delta service installations contemplating an increase in load may continue to be served three-wire as long as the customer's service equipment has sufficient capacity to carry the additional load. If the existing transformer bank must be changed to service the new load, the neutral shall not be grounded or run with the service. If the customer must change their service equipment, service shall be provided at 277/480 V, wye connection.

   If an existing transformer bank has sufficient capacity and a new customer desires service, they may be provided a 480 V delta service.

6.2 Customer-Service Voltages

Under all normal load conditions, distribution circuits will be operated so as to maintain secondary service voltage levels at the service point within the voltage ranges specified in Table 1–3.

Table 1–3: Customer-Service Voltages

Nominal Two-Wire and Multi-Wire Service Voltage	Minimum Voltages to All Services	Maximum Service Voltages on Residential and Commercial Distribution Circuits	Maximum Service Voltages on Agricultural and Industrial Distribution Circuits
120	114	120	126
208	197	208	218
240	228	240	252
277	263	277	291
480	456	480	504

Note(s):

1. Exceptions to Voltage Limits. Voltage may be outside the limits specified when the variations are any of the following:
   - Result from the temporary action of the elements.
   - Are infrequent momentary fluctuations of a short duration.
   - Result from service interruptions.
   - Result from temporary separation of parts of the system from the main system.
   - Are from causes beyond the control of the Company.

6.3 Customer-Utilization Voltages

All customer-owned utilization equipment must be designed and rated in accordance with the utilization voltages specified by the American National Standard Institute (ANSI) C84.1, if customer equipment is to give fully satisfactory performance:

Table 1–4: Customer Utilization Voltages

Nominal Utilization Voltage	Minimum Utilization Voltage	Maximum Utilization Voltage
120	110	125
208	191	216
240	220	250
277	254	289
480	440	500

Minimum utilization voltages from ANSI C84.1 are shown for customer information only as the Company has no control over voltage drop in customer's wiring.

7.0 Customer Transformation and Harmonic Interference

In order to prevent third harmonic interference, the following requirements will apply to the delivery of all (and only) three-phase high-, or low-voltage service to be transformed by the customer to different values.

7.1 High-Voltage Service

Where the customer desires to take three-phase, high-voltage service delivery and transform the service delivery voltage to 120/208 V (wye) or 277/480 V (wye), or to install any other transformation that involves the use of a wye connection to supply the desired utilization voltage, the Company will supply, at its option, either 4,160 V; 4800 V; 7200 V; 12000 V; 16500 V; or 33000 V.

Where service to the customer is delivered directly from the Company's 2400 V; 4160 V; 4800 V; 7200 V; 12000 V; 16500 V; or 33000 V circuits, single-phase or three-phase transformers having the same primary voltage rating as the service delivery voltage, with their primary windings connected in delta, are acceptable. In the event that the Company converts its primary distribution system from 2.4 kV delta to 4.16 kV (wye), the Company will supply the material and labor to convert an existing transformer installation to comply with this requirement.

Where service is delivered to the customer from the Company's bank of delta-wye, wye-delta, or delta-delta connected transformers, located on the customer's premises, the Company has no requirements for wye or delta connection of transformers installed by the customer.

7.2 Low-Voltage Service

Where three-phase service is delivered to the customer at 240 V and the customer desires to transform to a different voltage, the customer may only connect a delta primary transformer to the Company service.

Where an established three-phase, 480 V combination light-and-power service is delivered to the customer, the customer may establish a three-phase, four-wire, 277/480 V grounded neutral system on the load side of their main disconnect. An artificial neutral would be derived from an approved single winding type grounding transformer furnished and installed by the customer. This arrangement will be acceptable to the Company only in cases where the Company's transformers are located on the customer's premises and supply one service at three-phase, three-wire, 480 V exclusively.

8.0 Agricultural Power Service — Three-Phase, 240 V and 277/480 V

Three-phase, 240 V and 277/480 V agricultural service will be supplied by the normal method whereby the customer supplies complete service facilities. **Exception**: Agricultural customers relocating serviceable three-phase, 480 V, three-wire service equipment, may be provided a three-wire service.

8.1 100 A Service

Where the nameplate horsepower rating of any motor does not exceed 30 hp, 240 V or 60 hp, 277/480 V, a factory-bussed safety-socket box with a 100 A rating shall be installed.

The meter socket for 240 V service will be 5- or 7-clip, depending on the grounding of the serving transformer bank. The meter socket for 277/480 V service will be 7 clip. Consult your local Service Planning Office before purchasing or installing service equipment.

The maximum wire size or current-carrying capacity of the conductors installed in the customer's service raceway shall not exceed that of No. 1 wire, and the conduit size of such raceway shall not exceed 1-1/2 inches. The capacity of the customer's service switch is not limited under these conditions.

The total actual continuous operating load current, excluding motor starting current, shall not exceed 80 A.

8.2 200 A Service

Where the nameplate horsepower rating of any motor does not exceed 60 hp, 240 V or 125 hp, 277/480 V, a factory-bussed, safety-socket box with a 200 A rating shall be installed.

The meter socket for 240 V service will be 5- or 7-clip, depending on the grounding of the serving transformer bank. The meter socket for 277/480 V service will be 7 clip. Consult your local Service Planning Office before purchasing or installing service equipment.

The maximum wire size or current-carrying capacity of the conductors installed in the customer's service raceway shall not exceed that of No. 3/0 wire and the conduit size of any such raceway shall not exceed two inches. The capacity of the customer's service switch is not limited under these conditions.

The total actual continuous operating load current, excluding motor-starting current, shall not exceed 160 A.

8.3 Above 200 A Service

If the total actual operating load current, excluding motor-starting current, for any reason exceeds 160 A, either at the time of installation or thereafter, the customer shall at such times have complete facilities installed (at their expense) consisting of an approved instrument transformer box or an approved switchboard. See ESR–5 and ESR–6.

9.0 Overhead Service

9.1 To Customer's Service and Meter Pole

See ESR–2.

9.2 To Customer's Building or Structure

The Company will install overhead service drops to a building or structure adequate to support the service and meter equipment. This type of service will not be rendered to wind machine towers or columns, or similar equipment subject to excessive vibration. For these types of installations, the meter box shall be installed on a separate vibration-free structure. The service conduit, if attached to the structure, shall descend into the concrete base and rise up into the meter structure. See ESR–2 for additional Overhead Service Information.

10.0 Underground Service

10.1 To Customer's Service and Meter Post

See ESR–3.

10.2 To Customer's Building or Structure

See ESR–3.

11.0 Service or Meter Switch — General Requirements

A disconnecting means with overcurrent protection is required at the meter location. In some cases, it is a single switch or circuit breaker. In other cases, where permitted by the Company and by inspection authorities, it may be a group of switches or circuit breakers, per National Electrical Code (NEC) 230–71.

A service or meter switch, as defined above, shall be furnished and installed by the customer in every service proposed to be supplied with electric energy from the Company's system as specified in these requirements.

12.0 Customer Generators

Customer generators shall not be switched or operated in parallel with the SCE system without Company approval. Paralleling shall be in accordance with requirements of the applicable tariff schedules or special parallel generation agreements. Customers and consultants should contact the local SCE Service Planning Office for details.

When a customer has a standby generator to supply all of their load during an SCE system outage, the generator shall be connected to the load by a double-throw switch or automatic relays and switches which will isolate the load from the SCE system before the generator is connected to the load. When the SCE service is re-energized, the generator will then be isolated from the load before the load is reconnected to the SCE system.

RULE 21 NET GENERATION OUTPUT METERING

Rule 21 output metering is required for most customer-generator installations where the generator is installed and intended to operate in parallel with the SCE Distribution System for extended periods of time. Net Generation Output (NGO) metering is required to provide revenue-grade metering data for "non-bypassable charges" to the various categories of customers who serve all or a portion of their electrical energy needs from a source other than SCE. Net Generation Output metering shall be located in a customer's circuitry at a location that will facilitate measuring "net" generator output. Customer load circuits cannot be connected between the generator and the NGO metering. Generator auxiliary loads (loads necessary for generator operation only) can be connected between the generator and the NGO metering. Net Generation Output metering may also be used by SCE for the other reasons permitted under Rule 21.f. Net Generation Output metering panels, metering switchboards, and medium-voltage metering sections shall be fabricated in a manner as specified in SCE's Electrical Service Requirements. Net Generation Output Metering supplied by SCE shall be revenue grade and installed in equipment fabricated to the specific requirements found within this manual.

Written requests for information about Rule 21 may be mailed to SCE at the following address:

Southern California Edison Company
Attention: Distributed Generation Administrator
2244 Walnut Grove Avenue, Q4D Rosemead, CA 91770

Alternatively, customers may contact SCE regarding distributed generation or Rule 21 interconnection requirements at (626) 302-9669 or by sending an e-mail to SCE at customer.generation@sce.com.

See the Net Energy Metering Interconnection Handbook for more information.

12.1 Equipment Review

Plans for specific service equipment designed to accept utility-supplied Net Generation Output Metering (NGOM) and associated equipment shall be submitted to SCE for review and approval prior to fabrication and installation. The manufacturer shall submit three copies of the equipment drawings to the local Service Planning Office, or assigned SCE engineer for review and approval. When service equipment for NGOM is improperly engineered and installed, and the Company was not contacted in advance, the customer shall be responsible for all modifications and the costs to provide the same.

12.2 Location and Access

NGOM and devices may optionally to be grouped with the Point of Common Coupling (PCC) revenue metering that is used to measure energy delivered to a customer from SCE's Distribution System. Where NGOM sections are located in the same switchboard, switchgear, or metering location, as the PCC metering, the customer shall install a 1-1/2–inch conduit between the PCC and NGOM current transformer compartments. The conduit shall enter the current transformer compartments in the front, against the side with hinges on the door. NGOM locations shall be accessible to SCE on a continuous (24-hour) basis, or as otherwise agreed to between customer and SCE.

NGOM panels and devices shall be installed in accordance with all of SCE's applicable Electrical Service Requirement's work clearances and specifications. Service equipment, proposed by customer to accept utility NGOM equipment, shall be reviewed and approved by SCE prior to installation. Service equipment, installed by customer to accept utility NGOM, shall be inspected and approved by any authority having jurisdiction over customer's equipment prior to the installation of SCE's meter and/or equipment.

12.3 Equipment Marking/Labeling

NGOM equipment shall be permanently labeled "Net Generation Output Metering." The label shall be located on the meter panel or adjacent to the meter socket. Customer NGOM section(s) or panel(s) shall be labeled by permanently attached machine-engraved laminated phenolic (or equal) tags. All lettering shall be a minimum one-quarter inch in height. When self-contained (non-instrument rated) metering is supplied by SCE for NGOM purposes, a safety-socket box with factory-installed test-bypass blocks is required. When switchboards or switchgear are installed, the customer shall provide a tag or other identification method to indicate which bus or cable direction from the NGOM connects to the generator output. Typically, the marking should read "Grid side" or "Generation side." If the NGOM equipment and PCC metering equipment are separated by a distance of more than 100 feet

, or are located on different levels or floors, then a permanent sign shall be placed at the PCC metering location which states the location of the NGOM equipment.

12.4 Prohibited Metering Locations

NGOM panels, switchboards, or medium-voltage metering sections shall not be located in prohibited meter locations found in or as otherwise deemed unacceptable to SCE. NGOM metering locations shall be reviewed and approved by SCE prior to installation.

12.5 Switch and Disconnect Requirements

For low-voltage (less than 600 V) switchboards and high-voltage (above 600 V) switchgear, the electrical system shall be engineered so that the Net Generation Output Metering (NGOM) section can be de-energized and isolated so that SCE workmen can work on the metering equipment without inadvertent closing of isolation devices. NGOM sections shall be isolated by either lockable open or rackable open circuit breakers and/or open and lockable disconnect switches. Isolation devices shall have signage that clearly indicates open positions and provisions for SCE to place a Company padlock on such devices. It is the responsibility of the customer to operate such devices and de-energize NGOM upon SCE request. It is recommended, but not required, that the lockable open devices be located to isolate the NGOM section only. This will facilitate isolating the NGOM section without interrupting customer load.

12.6 Voltage Standards

If a customer installs a generator using a voltage not listed in ESR–6, then the customer will be required to install, own, and maintain a transformer to match SCE's service voltage. NGOM sections provided by customers shall be located on the utility (SCE) side of this voltage-matching transformer unless host loads are connected at the generator voltage on the generator side of this transformer.

12.7 Safety-Socket Box with Factory-Installed Test-Bypass

A safety-socket box with factory installed test blocks is required on all commercial accounts, multi-family units and Net Generation Output Metering (NGOM). Single Family Dwellings do not require test blocks. NGOM measures total generation output from the customer's generation system. Refer to DOH T 725 for wiring diagrams. The specifications for this panel can be found in ESR–5. The wiring sequence of factory-installed test-bypass blocks, from left to right, is LINE-LOAD, LINE-LOAD, LINE-LOAD. For NGO metering purposes, the generator output conductor shall be connected to the terminal marked "LINE." For Solar On Multi-Family Affordable Housing (SOMAH) / Multi-Family Affordable Solar Housing (MASH), the input from the generator will be connected to test block marked LOAD.

12.8 Generation Meter Adapter (GMA)

A. General Requirements

The existing electrical panel and all electrical connections and components must be approved by the Authority Having Jurisdiction (AHJ). The Generation Meter Adapter will only be allowed for installation on single family residential, self-contained, single phase, 120/240 V panels rated between 60–200 A with a main breaker. The Generation Meter Adapter shall only be used to facilitate Generation Interconnections and can only be obtained from SCE through the Generation Interconnection Process.

B. Technical Requirements

A single, AC fuseable disconnect, with an external lockable handle shall be installed directly adjacent to the meter. Customer/Contractor must utilize liquid tight flexible conduit for the connection between the overcurrent device and the Generation Meter Adapter (2-feet minimum–3-feet maximum) that may be extended depending on field conditions per SCE personnel. The Generation Meter Adapter will not be installed on A-Base, old sequence meters, or on panels that utilize another meter adapter. The

Generation Meter Adapter can only be installed on panels that allow the neutral to be easily routed from SCE's section to the customer breaker section. SCE will not be responsible for terminating the grounding conductor.

12.9 Meter Socket Adapter (MSA)

Southern California Edison (SCE) allows the installation of customer-owned Meter Socket Adapters (MSAs) as described in the general and technical requirements of this section. MSAs are devices installed between the customer's meter socket and SCE's electric meter, enabling integration of distributed energy resources (DERs) or additional load without requiring a full panel upgrade. These adapters may be isolating or non-isolating, depending on their intended use-either for generation interconnection (e.g., solar, battery) or load support (e.g., EV charging).

A. General Requirements

MSAs are permitted only on single meter socket panels in residential settings, with a Form 2S meter socket configuration, 120/240 volts, and 60 to 200 ampacity rating with a main breaker. Multi-socket panels, multi-family units, and commercial installations are excluded. Only one MSA may be installed per meter, and the device must be listed on SCE's Approved Product List.

MSA's can be installed on Accessory Dwelling Units (ADU's) provided the ADU is equipped with a dedicated independent single meter socket panel that meets both the general and technical requirements of this standard and is separate from the main residence's panel.

B. Technical Requirements

A single, non-fused adapter, with or without an isolation switch MSA, shall be installed between the customer's meter socket and SCE's electric meter. The contractor must utilize a weatherproof communication cable for the connection between the MSA and the Distributed Energy Resource (DER) controller panel. The contractor may use a liquid-tight flexible conduit for the communication cable as required by the Authority Having Jurisdiction (AHJ). The liquid-tight conduit connecting the adapter to the controller panel must be between 2 feet (minimum) and 3 feet (maximum), though this length may be adjusted based on field conditions as determined by SCE personnel. MSAs will not be installed on A-base, old sequence meters, or panels that already utilize another meter adapter.

The MSA may be energized at either 120/240 V or 240 V. In cases where a neutral connection is required for the MSA, the neutral cable-if available-must be routed cleanly and accessibly from SCE's section to the customer's breaker section. It is important to note that SCE will not be responsible for terminating the neutral cable.

Additionally, the electrical panel must be in good working condition and must meet all applicable standards outlined in SCE's Electrical Service Requirements (ESR) and those enforced by the Authority Having Jurisdiction (AHJ). Panels that are damaged, outdated, or non-compliant may be deemed ineligible for MSA installation.

Only SCE personnel or authorized agents are permitted to install, remove, or service the meter and the MSA. Unauthorized access or tampering with the meter socket or seal is strictly prohibited and may result in removal of the device and service penalties.

The meter and adaptor must be located in a position that is both safe and readily accessible to SCE personnel. Adequate working clearances must be maintained around the meter and adapter in accordance with the Meters - EXO Installations section of ESR-5. These clearances are designed to protect utility workers and ensure that equipment can be safely operated and maintained without obstruction. If the existing configuration poses safety risks or violates clearance standards, the applicant must either correct the issue or pay for relocation of SCE equipment. SCE reserves the right to deny installation if the site does not meet safety or operational standards.

C. Types of Customer-Owned MSAs

MSAs may come with or without isolation switch, depending on the application and SCE requirements:

1. MSA with Isolation Switch: This type of Meter Socket Adapter (MSA) includes a built-in electrical isolation switch that enables a customer's distributed energy resource (DER)-such as battery energy storage systems and solar panels-to operate independently from the utility grid during power outages. The primary purpose of the isolation feature is to ensure safety and compliance. It allows the DER to be disconnected from the grid, preventing unintended backfeed that could pose serious risks to utility personnel working on power lines or equipment. MSAs with electrical isolation intended for use with generating facilities shall comply with Rule 21 Microgrid Operational Requirements as defined under Section Hh.1.h.

   MSAs may also support generation interconnection to the grid-side connection commonly used in Generation Meter Adapter (GMA) installations. For more details on GMA installation, refer to the Net Energy Metering Interconnection Handbook.

   Refer to Figure 1-3 for an example of an MSA with an Isolation Switch.

Figure 1–3: MSA with Isolation Switch

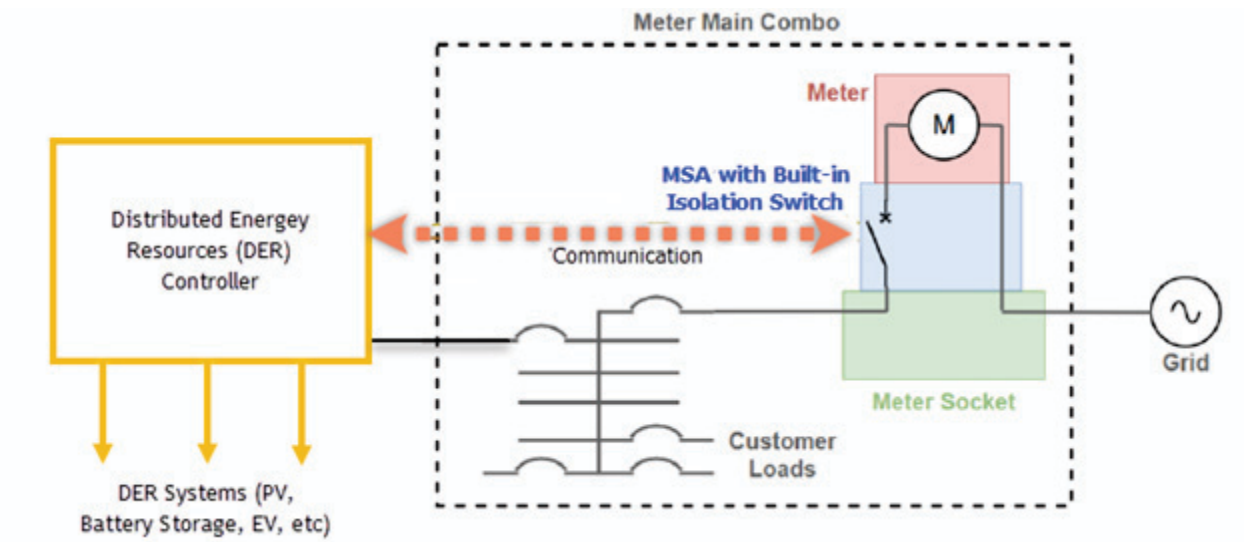

2. MSA without Isolation Switch: This is designed for installations where the customer is adding electrical load-not generation-to their existing service panel. Unlike isolating MSAs, these adapters do not include an isolation switch because they are not intended to disconnect from the grid or operate independently. Their primary function is to support electrification upgrades without requiring a costly or complex panel replacement. These adapters are particularly useful in residential settings where customers are installing electric vehicle (EV) chargers or other similar equipment. This configuration supports load-only applications, such as EV charging. This load does not function as a DER and poses no risk of backfeed or islanding. By using a non-isolating MSA, homeowners can safely and efficiently expand their electrical capacity while maintaining compliance with utility standards. Refer to Figure 1-8 for this type of MSA without Isolation Switch.

Figure 1–4: MSA without Isolation Switch

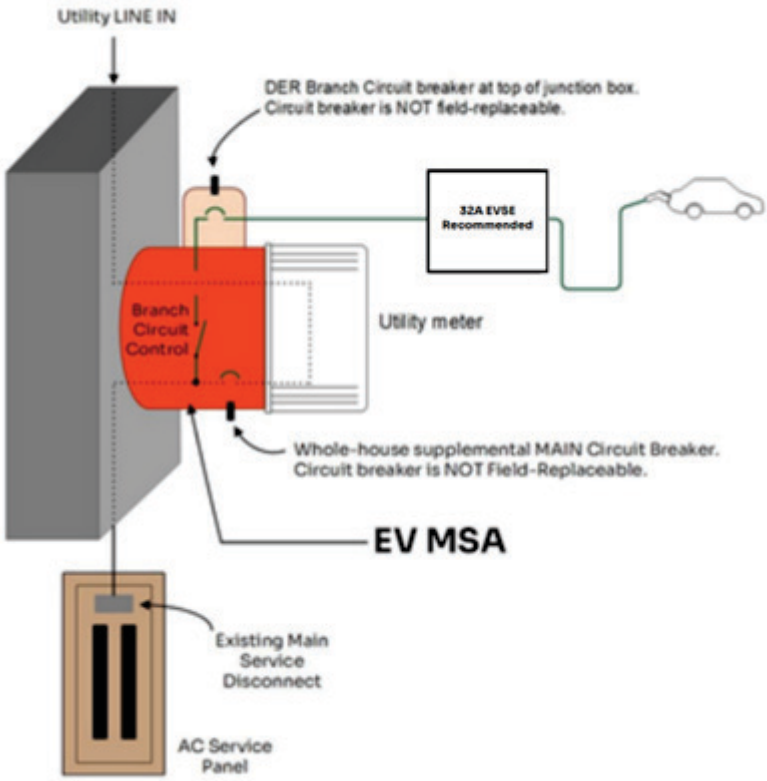

D. Customer Owned MSAs

Applicants for Customer-Owned MSA must be current SCE residential electric customers or authorized agents acting on their behalf. Southern California Edison (SCE) provides a dedicated online platform known as the MSA Online Enrollment Portal. All inquiries and requests for installation, removal, or maintenance of MSAs related to customer-owned Meter Socket Adapters (MSAs)must be submitted through the MSA Online Enrollment Portal at scemeteradapter.powerclerk.com.

The portal streamlines the experience and ensures that all necessary steps are completed in accordance with SCE's standards. For additional support, customers may also contact their assigned SCE service planner or visit www.sce.com for general assistance.

13.0 Short-Circuit Current

Where state and/or local building inspection agencies require that customers install service equipment with overcurrent protective devices with a short-circuit rating equal to or not less than the available short-circuit current at its supply terminal, the customer should obtain from SCE, the Company's contribution to short-circuit currents at the customer's service entrance.

The Company's contribution to short-circuit currents, at the customer's service entrance, will be as follows for the applicable type of service to be rendered.

13.1 10000 A and Below (100–400 Maximum Amperes Self-Contained Type Meter Panels)

The Company's contribution to the available short-circuit current at the service entrance will not exceed 10000 A for single-family dwellings, duplexes, or individually metered mobile homes that use self-contained type Company meters.

Temporary service, when served from a single-phase 120/240 V transformer, will not exceed 10000 A. Self-contained 300/400 A (Class 320) type meter panels are **NOT** acceptable for temporary service.

13.2 Greater than 10000 A—Multi-Family Residential (Three or More Grouped Meters), Commercial, and Industrial

Table 1–5: Short-Circuit Current

Phase	Serving Voltage (V)	Service Entrance Ampacities (A)	Utilities Contribution to Fault Current will Not Exceed (A)
Single	120/240	600 or less	42000
Three	120/208 or 240	800 or less	42000
Three	480	1200 or less	30000

13.3 Exceptional Cases

When the application of the above fault current limitation appears too restrictive for new installations, the customer may request the utility to provide the available fault currents for a specific case and location.

All new installations with service voltage or service entrance ampacities larger than those stated above will be handled as individual cases, and the Company will provide the available fault duty for each installation.

14.0 Electric and Magnetic Fields

Electric and magnetic fields are also known as "electromagnetic fields" or "EMF." Electric and magnetic fields are a natural result of electricity. Whenever an electric charge or current is present, either natural or man-made, electric and magnetic fields occur. Electric power distribution facilities generate both electric and magnetic fields.

14.1 Electric Fields

Electric fields result when voltage is present. The strength "E" of electric fields is represented by "volts per meter." As the distance increases from the source, the electric field strength decreases rapidly.

Any conducting surface such as a roof, metallic fence, or soil will shield electric fields. Therefore, underground cables, pad-mounted equipment, and wires in metallic conduit DO NOT expose the public to electric fields, and are not a primary concern in this document.

14.2 Magnetic Fields

Magnetic fields are caused by current flowing in conductors, regardless of the voltage present. The magnetic field typically surrounds a current-carrying conductor in a cylindrical fashion.

The strength “B” of magnetic fields is represented by milliGauss (mG). As the distance increases from the source, the magnetic field strength decreases rapidly. Conducting materials, such as earth and metal, usually have little effect on magnetic fields.

14.3 SCE’s Corporate Electric Magnetic Fields Policy

After many years of research, scientists have not found that exposure to power-frequency EMF causes disease in humans. Research on this topic is continuing.

We are aware that some members of the public are concerned about the potential health effects of power-frequency EMF. We recognize and take seriously our responsibilities to help resolve these concerns. Realizing that we need to better understand EMF and respond to the current uncertainty, we believe SCE’s responsibilities are to:

- Provide balanced, accurate information to our employees, customers, and public agencies, including providing EMF measurements and consultation to customers upon request.
- Support existing research programs at the California Department of Health Services and National Institute of Environmental Health Sciences to resolve the key scientific questions about EMF.
- Conduct research to develop and evaluate no- and low-cost designs for reducing EMF from electric utility facilities.
- Take appropriate no- and low-cost steps to minimize EMF exposures from new facilities and continue to consult and advise our customers with respect to existing facilities.
- Research and evaluate occupational health implications and provide employees who work near energized equipment with timely and accurate information about EMF exposure in their work environment.
- Assist the California Department of Health Services, the CPUC, and other appropriate local, state, and federal governmental bodies to provide reasonable, uniform regulatory guidance.

14.4 Sources of Magnetic Fields

Figure 1–5 shows the sources of magnetic fields in and around a typical residence. These sources also exist in and around other buildings, such as: schools, offices, stores, and businesses. As current flows from SCE’s transmission and distribution facilities, EMF can be detected and measured near wiring and electrical appliances, where currents are present.

Figure 1–5: Sources of Magnetic Fields

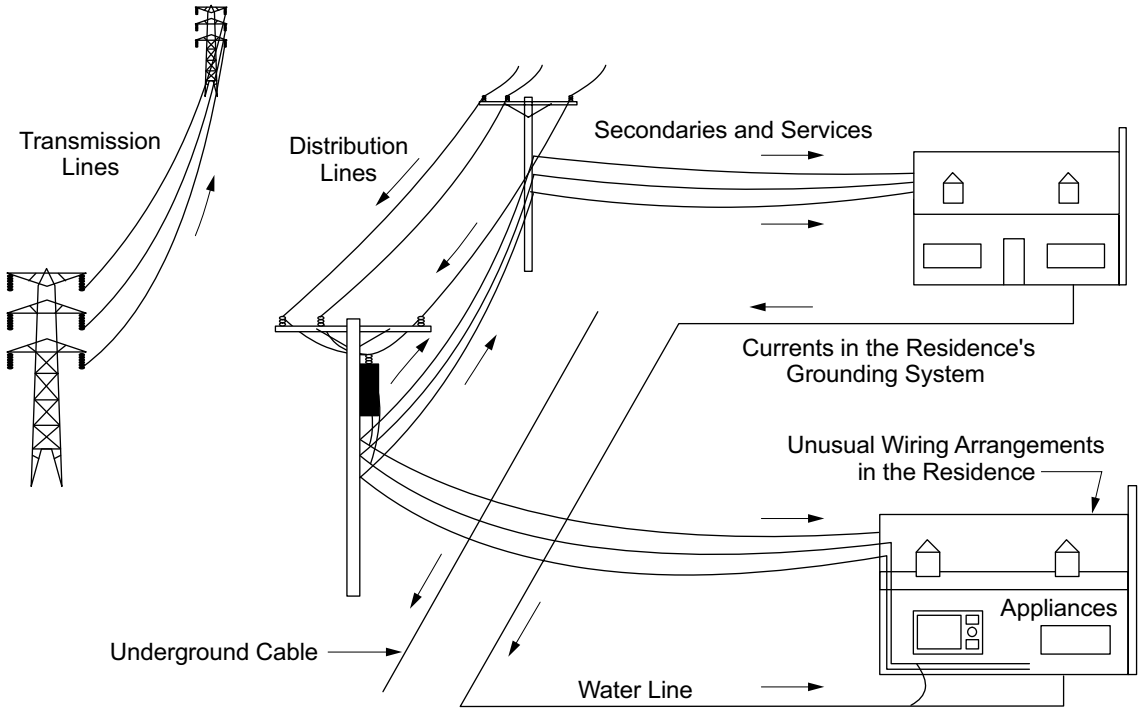

Table 1–6 shows magnetic field strength levels for various household appliances, which range as high as 20000 mG for a hair dryer. Notice how quickly the magnetic field strength levels decrease as distances from appliances increase.

Table 1–6: Magnetic Fields from Electrical Appliances

	Magnetic Field (milliGauss)		
Appliances[a/]	**1.2 Inches**	**12 Inches**	**39 Inches**
Electric Blanket	2–80	—	—
Clothes Washer	8–400	2–30	0.1–2
Television	25–500	0.4–20	0.1–2
Electric Range	60–2000	4–40	0.1–1
Microwave Oven	750–2000	40–80	3–8
Electric Shaver	150–15000	—	—
Fluorescent Lamp	400–4000	5–20	0.1–3
Hair Dryer	60–20000	1–70	0.1–3

[a/] Source: SCE Questions and Answers about Electric and Magnetic Fields.

14.5 Magnetic Field Management Techniques

Generally, the following methods will minimize the public exposure to magnetic fields near overhead and underground electrical equipment:

NOTE These methods are also in minimizing the effects of magnetic fields on sensitive electronic equipment, such as computer monitors.

1. Place wires and conductors close together.
2. Place overhead conductors as far away as is reasonable from foot traffic and normally occupied spaces.
3. Bury underground conductors in trenches and conduits as deep as is reasonable, especially in areas near foot traffic or normally occupied spaces.
4. Place meter panels on unoccupied areas of the building, such as garages, storerooms, and so forth. See Figure 1–6.
5. Place transformers as far away from occupied areas as is practical and design the location to discourage loitering by the public.
6. Locate transformers away from occupied areas, orient secondary side away from pedestrian access and occupied areas. See Figure 1–7.

Figure 1–6: Meter Panel Locations

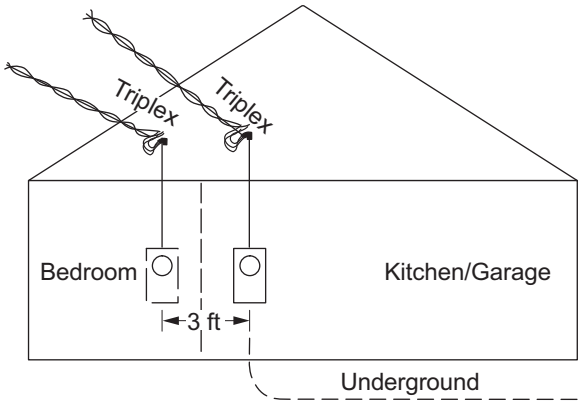

Moving meter panel 3 feet will reduce EMF approximately 87 percent. Examples:

100 A at 1 ft; MAX B = 96 mG
100 A at 3 ft; MAX B = 12 mG

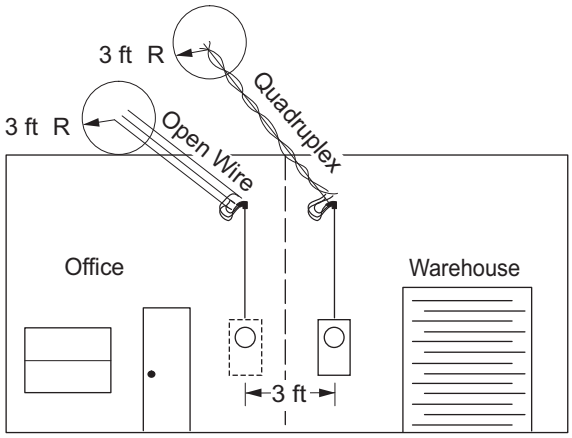

Moving meter panel 3 feet will reduce EMF approximately 88 percent. Examples:

250 A at 1 ft; MAX B = 128 mG
250 A at 3 ft; MAX B = 15 mG

Figure 1–7: Magnetic Field Strength Measurements — 1Ø Pad-Mounted Transformer

EMF: 1Ø 50 kVA Pad-Mounted Transformer
7.2 A Primary, 216 A Secondary

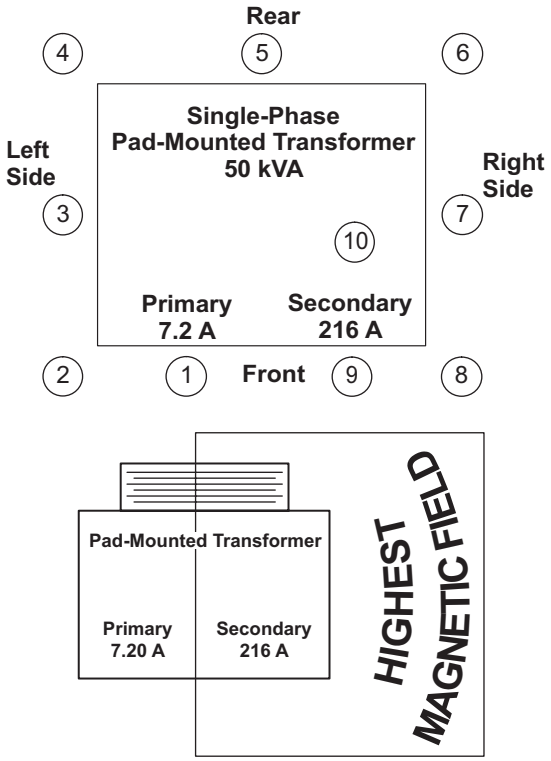

Maximum B (mG)

Location	Distance from Cabinet in Inches			
	1	12	36	60
1	59	7	6	4
2	29	10	4	4
3	68	26	6	5
4	27	12	7	5
5	56	24	4	3
6	63	10	5	4
7	380	94	15	7
8	97	28	5	4
9	220	54	11	5
10	590	101	14	5

14.6 Summary

Electric Magnetic Fields (EMF) have not been established to have either worker or community health impacts, nor is there sufficient information available to set public health standards (because a health hazard has not been established, and there is no operational definition of exposure). Southern California Edison wants the electric utility industry and the community to take appropriate actions in preparation for an uncertain future. While these actions may or may not have any actual public health benefits, they are justified as long as:

- The costs are reasonable.
- They do not adversely affect electric system reliability and safety, or cost.
- They do not impact the appropriate allocation of individual or social public health resources.

The guidelines presented here are for new construction and are examples of the most common situations that SCE, architects, and developers face where they may make an impact on EMF exposure. Southern California Edison has an EMF Education Center and Specialists available at (800) 200-4SCE, if additional information is required.

15.0 Residential Area Installations

Residential developers building in hazardous areas that contain a concentration of flammable vapors or gases will be required to install a seal at the underground service termination enclosure that complies with the NEC.

15.1 Hazardous Areas by Class and Division

The following general definitions are derived from the NEC:

A. Class 1, Division 1

Locations in which ignitable concentrations of flammable vapors or gases may be present under normal operation conditions—highly hazardous.

B. Class 1, Division 2

Locations in which flammable liquids, vapors, or gases are handled, processed, or used but are normally confined within closed containers or systems.

15.2 Location of Service Facilities

Service and metering facilities (that is, approved underground terminating enclosures and metering sections) shall be located outside classified hazardous locations (as defined above) unless the Company determines it is not possible.

The Company does not use or install duct sealing devices or compounds (for example, sealing hubs, fittings, and associated sealing compounds) that are intended to prevent the transfer of hazardous or explosive gases into underground service terminating enclosures (for example, pull boxes or pull sections) or into service conduits to those enclosures. If at all possible, the underground service shall be designed so that such devices are not required.

If the service conduits should extend through a hazardous location, the terminating enclosure shall be located outside of the building (not in a meter room) and outside of the hazardous area.

15.3 Electrical Y Seal Conduit Sealing Vertical Fitting and Material Application

The customer is responsible for properly selecting and installing the sealing materials in the Electrical Y Seal (EYS) conduit sealing vertical fitting after the Company has installed the service cable. The sealing materials (sealing compound and fiber dam) shall be the type approved for the conditions and use. The conduit seal vertical fitting and sealing compound application provides a seal against the passage of gases or vapors, which complies with Article 501 of the NEC.

15.4 Service Cable Replacement

Should the service cable require replacement, the Company shall be notified to de-energize the service cable. The customer (at their expense) shall be responsible to cut out the existing conduit sealing vertical fitting along with the service cable in the fitting.

Before the new EYS conduit sealing vertical fitting is installed by the customer (at their expense), the customer should contact the local authority having jurisdiction to verify if the sealing vertical fitting is still required to prevent the transfer of hazardous gases or vapors.

If it is determined that the fitting is required, the customer shall install the new conduit sealing vertical fitting and mandrel the conduit to clear any obstruction in the conduit and provide a pulling rope in the conduit before the Company installs the new service cable.

After the Company installs the new service cable, the customer (at their expense) shall apply the fiber dam and sealing compound. The local authority having jurisdiction shall re-inspect the application.

Should the local authority having jurisdiction determine that the conduit sealing vertical fitting and sealing materials are not required, the customer (at their expense) shall install Schedule 40 PVC conduit where the fitting was cut out to the terminating pull section of the meter panel. The customer shall provide a pulling rope in the conduit before the Company installs new service cable.

Figure 1–8: EYS Conduit Sealing Vertical Fitting

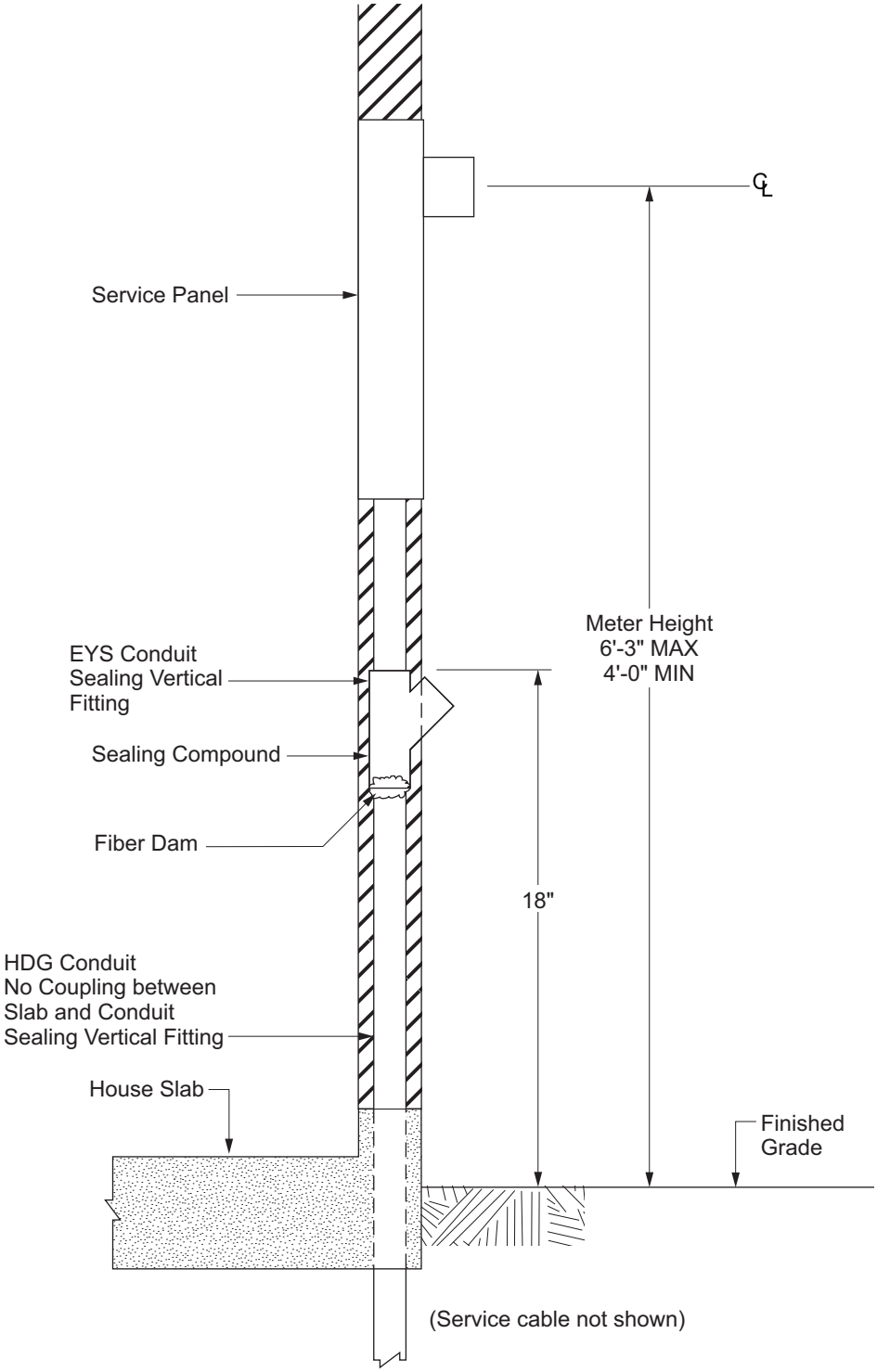

ESR–2: Overhead Service Connections 0–600 V

TABLE OF CONTENTS

SECTIONS AND SUBSECTIONS		PAGE
1.0	Overhead Service — General Information	2–5
2.0	Combination Loads	2–5
2.1	Single-Phase Service — 120/208 V, 120/240 V, 240 V, and 240/480 V	2–5
2.2	Three-Phase — Four-Wire Service	2–5
2.3	Three-Phase — Four-Wire — 120/208 V Wye Service	2–5
2.4	Three-Phase — Four-Wire — 277/480 V Wye Service	2–5
2.5	Three-Phase — Four-Wire — 120/240 V Delta Service	2–5
2.6	Three-Phase Service — 120/208 V, 240 V, and 277/480 V	2–6
3.0	Service Drops	2–6
3.1	General	2–6
3.2	Single Point-of-Service Delivery per Building	2–6
3.3	Point-of-Service Delivery—Two or More Buildings on the Same Lot or Premises	2–7
3.4	Number of Service Drops at One Point-of-Service Delivery	2–7
3.5	Maximum Length	2–7
3.6	Service Drop Termination on the Customer's Structure	2–8
3.7	Height of Point-of-Service Drop Attachment on the Customer's Structure	2–8
4.0	Service Drop Supports	2–8
4.1	General	2–8
4.2	Wood Buildings	2–8
4.3	Residential Buildings	2–9
4.4	Other than Wood Buildings	2–9
4.5	Horizontal Timbers	2–9
4.6	Vertical Risers	2–9
5.0	Location of Service Drop Supports or Point-of-Building Attachment	2–10
5.1	General Requirements	2–10
5.2	Specific Requirements	2–11
5.3	Exceptions	2–11
6.0	Service Heads	2–12
6.1	General	2–12
6.2	Maximum Number of Service Heads — Parallel Service Entrances	2–12
6.3	Location of Service Head	2–12
6.4	Height of Service Heads	2–12
7.0	Service-Entrance Conductors and Raceways	2–13
7.1	General	2–13

SECTIONS AND SUBSECTIONS **PAGE**

7.2	Service-Entrance Conductors	2–13
7.3	Service-Entrance Raceways	2–13
7.4	Service-Entrance Cable	2–14
7.5	Swimming Pool Clearances	2–25
7.6	Minimum Allowable Clearances for Services Drops	2–26
8.0	Customer-Owned Service and Meter Poles	2–27
8.1	General Requirements for Permanent and Temporary Service 0–600 V	2–27
8.2	Wood Brace for Temporary Service Requirements for One Year or Less	2–29
9.0	High-Voltage Connections 2,400 V; 4,160 V; 4,800 V; 7,200 V; 12,000 V; 16,500 V; and 33,000 V	2–34
9.1	General	2–34
9.2	Service	2–34
9.3	Single-Phase Service Capacity	2–34
9.4	Three-Phase Service Capacity	2–34
9.5	Single Point-of-Service Delivery	2–35
9.6	Service Support — Customer's Service Pole	2–35

FIGURES

2–1	Overhead Service Connections on Commercial and Industrial Buildings	2–15
2–2	Overhead Service Connections on Residential Buildings	2–16
2–3	Methods of Attaching Service Drops to Buildings	2–17
2–4	Solid Wood Service Drop Attachment Risers	2–18
2–5	Conduit Service Drop Attachment Risers (Periscope Type)	2–19
2–6	Service Drop Clearance — Residential Premises	2–20
2–7	Clearance of 0–600 V Services from Doors, Exits, Windows, and Fire Escapes	2–21
2–8	Minimum Vertical Clearance of Service Drops — Industrial or Commercial	2–22
2–9	Service Drop Clearance — Commercial or Industrial Premises	2–23
2–10	Clearance of Timber Risers on Buildings	2–24
2–11	Swimming Pool Clearances	2–25
2–12	Pitch of Roof	2–26
2–13	Temporary Service Requirements (Service for One Year or Less)	2–30
2–14	Wood Brace for Temporary Service Requirements (Service for One Year or Less)	2–31
2–15	Customer-Owned Permanent or Temporary Service Pole	2–32
2–16	Optional Customer-Owned Service and Meter Pole	2–33
2–17	Busway Service Head Requirements for 3Ø, 4-Wire — Wye or Delta — 600 V Maximum	2–36

TABLES **PAGE**

2–1 Timber Risers 2–10
2–2 Minimum Allowable Vertical Clearance over Buildings and Structures — 0–600 V Service Drops — Residential 2–26
2–3 Minimum Service Cable Clearance Aboveground 2–26
2–4 Vertical Clearances above Railroads, Thoroughfares, and Ground 2–27

This page intentionally left blank.

1.0 Overhead Service — General Information

Overhead service is not available in underground designated locations. Overhead service will not be supplied to any building or premises in an area designated as underground facilities only by the Company or local jurisdiction. In areas where both overhead and underground service facilities exist, the Company shall be consulted for determination of the type of service which will be supplied.

2.0 Combination Loads

Consult the Company for proper rate and meter location. Refer to ESR–5 for service voltage grounding.

2.1 Single-Phase Service — 120/208 V, 120/240 V, 240 V, and 240/480 V

The maximum rating of an individual meter switch for 120/208 V, three-wire service is 200 A. Normally for 120/240 V or 240 V service, the maximum meter switch rating is 400 A. Under certain operating conditions, permission may be granted for installation of 600 A service equipment for an individual 120/240 V or 240 V load. Otherwise, two separate 400 A service installations, or three such installations of 400 A or more, may be required, and totalized metering will normally be available. Consult the local Service Planning Office for requirements.

On multiple-occupancy buildings consult the local Service Planning Office for load requirements. See ESR–5 for group metering requirements.

2.2 Three-Phase — Four-Wire Service

Service will only be supplied to a residence if three-phase facilities are available at the location or there is one motor of more than 10 horsepower.

2.3 Three-Phase — Four-Wire — 120/208 V Wye Service

Service may be supplied at 120/208 V wye, provided the Company maintains a four-wire, 120/208 V wye system, or the customer's load would require an individual transformer installation of not less than 15 kVA; and, the transformer installation will be located on the customer's premises, when, in the opinion of the Company, such space is considered necessary.

2.4 Three-Phase — Four-Wire — 277/480 V Wye Service

Service will be supplied at 277/480 V wye. The transformer installation will be located on the customer's premises, when, in the opinion of the Company, such space is considered necessary.

2.5 Three-Phase — Four-Wire — 120/240 V Delta Service

Service may be supplied at 120/240 V three-phase, four-wire delta, provided the Company maintains a four-wire delta secondary system; or the installation requires not less than 15 kVA of transformer capacity; the unbalance between phases is less than 100 kW, and the service transformers will be located on the customer's premises, when, in the opinion of the Company, such space is considered necessary.

2.6 Three-Phase Service — 120/208 V, 240 V, and 277/480 V

Normally, for a given voltage or phase, only one set of service-entrance conductors with one meter switch which carries a customer's entire load will be permitted to a single occupancy. In all cases, the Company shall be consulted relative to available voltage and method of service delivery prior to making the service wiring installation. The maximum capacity for 120/208 V, 240 V, or 277/480 V three-phase is 4,000 A of connected load. When capacity exceeding 4,000 A is required, two or more services may be installed with totalized metering. See ESR–6.

3.0 Service Drops

3.1 General

Upon a sincere application for service, and where the Company's distribution pole line is located on the customer's premises, or on a street, highway, lane, alley, road, or private easement immediately contiguous thereto, the Company will furnish and install a single span of service drop wires from its pole to the customer's first approved permanent support.

Customer service drop supports shall be of a type and so located that Company service wires may be installed in accordance with good engineering practice, Company requirements, and all applicable laws, ordinances, rules, and regulations, including those governing clearances and points of attachment. Proper service drop support locations must be approved and verified by the local Service Planning Office. The Company is not responsible for a service drop support location assumed by the contractor or the customer.

When service drop clearances become impaired because of changes created by the tenant or owner of a premises, including such items as patio covers, fireplace chimneys, satellite dishes, desert coolers, or swimming pools, see Subsection 7.2, "it is incumbent upon the customer at their expense, to provide a means to correct the infraction."

When the installation of a new building or structure conflicts with the location of the existing utility service drop on the property serviced or existing customer service entrance conductors, it shall be the responsibility of the party making the new installation to clear the conflict.

3.2 Single Point-of-Service Delivery per Building

For all single-phase and three-phase installations where the individual meter switches are rated 200 A and below, only one point-of-service delivery will be established for a single- or multiple-occupancy building (including condominiums in common tenancy and townhouses developed with common area), unless otherwise determined by reason of company operating necessity. All service heads, together with the required facilities for termination of the Company's service drops for each of the phase and voltage classes of load to be served, shall be as closely grouped at this location as practicable. Consult the local Service Planning Office for requirements. See ESR–5 and ESR–6 for group metering requirements.[1/]

[1/] For townhouse developments where commonly owned property is not available, individual services may be provided to each townhouse unit.

3.3 Point-of-Service Delivery—Two or More Buildings on the Same Lot or Premises

Two or more buildings on the same lot or continuous premises may each have a point-of-service delivery under the following conditions:

- Local ordinances permit such installations.
- Each point-of-service delivery is so located that the service drop may be installed from the distribution pole line serving the lot or premises in accordance with all applicable clearances, distances and requirements of the Company.
- In cases where single premises are abnormally extensive, the Company shall be consulted with respect to the method by which service will be supplied.[2/]

3.4 Number of Service Drops at One Point-of-Service Delivery

Not more than one set of service drops will be installed by the Company to any one point-of-service delivery as permitted in Subsection 3.2 for any single- or multiple-occupancy building for the same voltage and phase classification, except as follows:

A. 120/240 V Single Phase

Where, for single-phase load only, with service delivery at 120/240 V, the total load to be served employs sets of service-entrance conductors supplying groups of meter switches, main service switches, or meter switches supplied by individual sets of service-entrance conductors, with aggregate capacity exceeding the maximum capacity which will be supplied by one set of service drops as specified in Section 2.0, the contractor shall install two or three separate sets of service-entrance conductors as required thereon for the total load, and provide service terminating facilities for a separate service drop near each service head required.

B. 240 V Single Phase

For 240 V single-phase power loads, the Company shall be consulted in each case relative to the required serving method. These loads may in some cases be supplied by one 3-phase service drop. In any case, a separate set of service-entrance conductors for connection to a separate service drop may be required by reason of the Company's operating necessity.

3.5 Maximum Length

The maximum length of a service drop is typically 100 feet, but may vary depending on the slope or grade of the land, intervening trees or structures, the size of conductors used, and the height and strength of the customer's service drop support. In order to minimize the strain, the point-of-service drop termination on the building shall be located as near to the Company's serving pole as practicable. Where questionable or extraordinary conditions exist, the Company Service Planning Office shall be consulted prior to the establishment of a point-of-service delivery.

[2/] Multiple-occupancy buildings will be served by one point-of-service delivery unless otherwise determined by reason of company-operating necessity. See ESR–5 for group metering requirements.

3.6 Service Drop Termination on the Customer's Structure

The contractor shall provide a suitable landing at the point-of-service delivery adjacent to the service head which will permit the attachment of service drop conductors in a manner acceptable to the Company. This service drop support, together with its supporting building or structure, shall have adequate strength to safely withstand the strain of the service drops. Where an unusually heavy service is involved the Company Service Planning Office shall be consulted with respect to the service drop support. Where the building does not provide sufficient strength to comply with requirements, the contractor shall install an adequate service pole adjacent to the building.

The Company will furnish and install only its standard service knobs, insulators, brackets, or racks. Any special devices or structures when permitted or required shall be furnished and installed by the contractor, conform to all legal requirements, and be acceptable to the Company.

3.7 Height of Point-of-Service Drop Attachment on the Customer's Structure

The height of the point-of-support or attachment of service drop conductors on the customer's structure shall be adequate to provide vertical clearances between service drop conductors and the ground, structures, roofs, stairways, windows, and so forth, not less than the values given in the text, and in Table 2–2 and Table 2–3, Table 2–4, and illustrations in Figure 2–6 through Figure 2–9. Adequate allowance must be made for the lowest point of sag in the service drop conductors and for the grade or slope of the area over which they pass.

4.0 Service Drop Supports

4.1 General

Only power service drops shall be permitted to be attached to a service mast or riser per National Electrical Code (NEC), Section 230-28. Only one service drop supporting structure may be installed for a service drop. It shall be located at the point-of-service delivery and normally will support the service head.

A service drop supporting structure may consist of a timber, angle iron or pipe rack, or a single unspliced timber or equivalent steel pipe or member. All types shall be securely braced where necessary and shall be bolted or lagged to the frame or to equally substantial members of the building. Where service entrance conductors exceeding 500 kcmil AWG are to be installed, the Company Service Planning Office shall be consulted prior to erection of the structure.

In each case where a metallic structure is proposed, the contractor shall ascertain from the Company the proper number, size, and configuration of the holes necessary to accommodate the studs or bolts furnished by the Company, to secure its service knobs or insulators to the structure. The contractor shall drill, and where necessary, tap such holes as designated by the Company.

4.2 Wood Buildings

Where properly located exposed surfaces of substantial wood building members are available which provide adequate strength and not less than two inches nominal thickness, service knobs will be screwed thereto. Where such surfaces are concealed by plaster or similar material, the contractor shall, prior to the application of such material, either install the necessary knobs or bolts (both of which will be furnished by the Company) for the

attachment of insulators, brackets, or racks, or shall provide visible external evidence of the location of the concealed studs or timbers by properly placing large nails which project out of the finished plaster or other surface material.

4.3 Residential Buildings

On residential buildings only, service drops of 0–300 V will, where better facilities are not available, be attached to rafters or suitable timbers from the upper side of a non-metallic roof only—provided that the rafters are exposed outside the wallplate and the roof surface is suitable. Attachment to a roof will in no case be made back of the outer face of the wall or wallplate, or above any enclosed cornice (see Figure 2–3).

4.4 Other than Wood Buildings

Where service drops are to be terminated on a building or structure on any portion thereof composed of metal, masonry, brick, stone, concrete, concrete blocks, or similar materials, the Company will furnish to the contractor at his request, any bolts necessary for the attachment of the Company's service drop dead-ending insulators or devices. Bolts will not be furnished for construction of supporting structures or their attachment to the building. The contractor shall install the bolts in the proper location which, where necessary, will be designated by the Company.

Overhead service will not be rendered directly to wind machine towers or columns, or similar equipment subject to excessive vibration. Unless the meter box is installed on a separate vibration-free structure, the service conduit, if attached to the structure, shall descend into the concrete base and rise up into the meter structure.

4.5 Horizontal Timbers

Suitable horizontal timbers shall have minimum nominal size of 3" × 4" × 30" and shall be bolted or lagged to the frame or other equally substantial portion of the building. Metal members may be installed in lieu of wood if drilled as specified by the Company. Timbers fastened on continuous wood surfaces may be 2" × 4" minimum. Consideration should be given to permit attachment of telephone and CATV drops (at required clearances) in addition to the electrical supply service drop.

4.6 Vertical Risers

Where any type of vertical riser is installed on a building having brick, concrete block, adobe, or similar walls, particular care shall be exercised to ascertain that its attachment will be made so that the wall will safely withstand the strain imposed thereon by the riser.

A. Timber Risers

Table 2–1 specifies minimum requirements for determining the dimensions of unbraced or braced single solid timber risers to support service drops of varying length based on the maximum size of service-entrance conductors involved.
See Figure 2–10. For method of installation, see Figure 2–4.

Table 2–1: Timber Risers

Dimensions of Single Riser — Clear Douglas-Fir Solid Timber (in)	Height of Point of Attachment above Building (ft)	Allowable Length of Service Drop (ft)	Maximum Size of Conductor Involved in Service Entrance
4 × 4 Unbraced	5 or less	0 to 75	#1
4 × 6 Unbraced	5 or less	75 to 100	#1
4 × 6 Unbraced	5 or less	0 to 75	500 kcmil
4 × 6 Unbraced	5 to 8	0 to 75	#1
4 × 6 Braced	Over 5	0 to 75	500 kcmil
6 × 6 Unbraced	8 to 12	0 to 75	Consult Company

Where a 4" × 6" timber is installed it shall be placed with the 6-inch dimension in the general direction of pull of the service drop.

B. Conduit Risers (Periscope Type)

A conduit riser of the periscope type may be installed as a service drop support where permitted, provided that the installation is made in accordance with the requirements of Figure 2–5. The Company will not assume any liability for damage to the building caused by roof leakage around such risers or from mechanical failure of the riser, its attachments to the building, or failure of any part of the building.

5.0 Location of Service Drop Supports or Point-of-Building Attachment

5.1 General Requirements

The point of attachment on the building or structure shall be located to permit the service drops to be run in a manner acceptable to the Company, unobstructed and free from interference from poles, floodlights, antenna masts, vent pipes, trees, and so forth, so that clearances not less than those indicated in the text, and in Table 2–2 and, Table 2–3, Table 2–4, and illustrations in Figure 2–4 through Figure 2–11, will be maintained between the drops and the ground, structures, roofs, stairways, balconies, walkways, windows, pools, and so on.

The location must be such that the service drop will not cross adjoining premises.

The location must be such that consumer's yard wiring will not be less than three feet radially from the service or open service-entrance conductors.

These location requirements shall apply whenever existing service installations are upgraded.

An area of working space shall be maintained to provide access when the point of attachment can only be reached by ladder. The working space is determined by the horizontal distance of the ladder from the top support to the foot of the ladder which is one-quarter of the working length of the ladder. For example, if the top support of the ladder is 20 feet, then you need five feet of working space for the foot of the ladder.

Contact the Company local Service Planning Office to verify the location of service drop supports and points of attachment. When service equipment is improperly located because the Company was not contacted in advance, the customer is responsible for all modifications.

5.2 Specific Requirements

The service drop support or point of attachment shall be located on that exterior wall, exterior frame member, roof edge, or verge on the side of the building, or structure which is nearest the street, alley, public way, or easement occupied by the Company's distribution pole or underground distribution system from which service will be supplied. See Figure 2–1 for commercial and industrial buildings and Figure 2–2 for residential buildings.

The location shall be such that the service drops will not pass over any portion of the building served, except small incidental roofs, balconies, walkways, stairways, fire escapes, and other similar minor projections from the wall or frame on which the drops are terminated.

5.3 Exceptions

Where the service drops from the Company's pole will pass over only the premises served, and will cross no intervening part of the building served, and will conform to all other provisions of these requirements, the service drop support or point of attachment may, where permitted by local ordinances, be on any exterior wall, exterior frame member, roof edge, or verge, provided that any increase in service drop length is acceptable to the Company. See Figure 2–1 and Figure 2–2.

Where the nearest exterior wall to the Company's distribution pole line is a shed or similar attachment to the building and does not afford sufficient height for a service drop support without erection of a vertical extension, and there is likewise, another wall or building member of adequate height and facing, the point-of-service drop attachment may, where permitted by local ordinance, be located on this wall or member, provided that the service drops will in no case pass over the low-shed type attached part of the building for a distance of over 30 feet. The point of attachment shall be located so that the vertical clearance between the service drops and the portion of the building passed over will be the maximum practicable, and in no case less than the vertical clearances shown in Figure 2–9 for commercial and industrial premises or in Table 2–2 for residential premises.

For residential service drops of 0–300 V, the point of building attachment shall not be less than one foot above any non-metallic roof or similar surface and shall be located so that the service drops will, beyond ten feet from the point of attachment, have a vertical clearance from the building served of not less than two feet. See Table 2–2 for clearances over metallic roofs. See also "Exhibit B" in Figure 2–2.

The point of attachment for residential service drops may be on the upper side of non-metallic roof eaves. See Subsection 4.3.

For residential service drops of 0–300 V, the point of attachment may be located so that the service drops will extend the minimum practicable distance beyond the building wall facing the pole line and will not extend more than one-half the depth of the building, or extend past the highest part of the section to which they are attached. In such cases, the point of attachment to the building shall be located so that at least two feet of vertical clearance will be maintained between the service drop and any incidental non-metallic roof of the building served. A clearance of 8 feet is required over metallic roofs of three-eighths pitch or less. See Table 2–2.

6.0 Service Heads

6.1 General

For overhead services, an adequate service head shall be provided on the supply end of every service enclosure or service entrance cable.

6.2 Maximum Number of Service Heads — Parallel Service Entrances

When more than three overhead service-entrance conductors paralleled per phase are in three separate risers necessary to supply the load for one metering location, a busway-type service entrance shall be required (see Figure 2–17).

For service requirements on busways installed for service from a transformer vault, see ESR–3 and ESR–4.

6.3 Location of Service Head

The service head shall be so located on the exterior of the structure served that only one point of attachment will be required for the service drop and should, where practicable, be at least one foot above the level of the required point-of-service drop attachment. The location shall be such that the service-entrance conductors may be conveniently connected to the service drop. Adequate drip loops shall be formed in the open wires between the service head and the point of attachment to the service drop. These service-entrance wires shall extend 18 inches minimum out of the service head, not to exceed three feet in length.

Where more than one service head for the same phase and voltage class of service is installed on a building, all such service heads shall be located so that they may be supplied through a single service drop, except where the total single-phase load requires installation of more than one service drop.

Where service heads for different phase and voltage classes of service are installed on a building on which a single point of delivery is established, such service heads shall be located as close together as practicable except as otherwise directed by the Company representative.

The service head may be located above the roof of the structure served, provided its installation conforms to all applicable provisions of these Electrical Service Requirements and applicable local ordinances.

A service head shall not be located on any wall or building member that faces and is less than three feet from a common property line.

6.4 Height of Service Heads

The service head shall be installed at a height that will maintain the conductor clearances above the ground and objects or structures required by the governing laws, rules, or ordinances, together with these requirements. The height shall not be less than ten feet for services limited to 150 V to ground, 12 feet for services limited to 300 V to ground, or more than 30 feet above the exterior grade level nearest such service head.

7.0 Service-Entrance Conductors and Raceways

7.1 General

For each overhead service connection, the contractor shall furnish and install a set of service-entrance conductors that shall conform to these requirements and to the provisions of applicable local codes and ordinances.

7.2 Service-Entrance Conductors

Service-entrance conductors may be copper or aluminum. Where aluminum conductors are used, the following requirements apply:

- Terminals shall be approved for aluminum conductors. Aluminum-bodied, compression-type terminals are preferred.
- Meter sockets shall be UL Listed for use with aluminum conductors.
- Aluminum conductors shall be wire-brushed and coated with an inhibitor compound before terminating.

The wire size shall not be less than #8 AWG copper or #6 AWG aluminum and the wire shall have approved insulation, except that bare neutral conductors may be installed where permitted by the governing law, rule, or ordinance.

Manufacturers using aluminum bus bar construction must use a plating process approved by Electric Utility Service Equipment Requirements Committee (EUSERC).

The conductors shall be continuous without tap or splice, except that approved clamped or bolted connections may be made in enclosures of metering equipment, and taps to main service-entrance conductors or to individual sets of metering equipment may be made in approved junction boxes, auxiliary gutters, or meter troughs.

In cases where, on commercial or industrial buildings, the service drop passes over the roof or firewall at a 12-inch minimum clearance, adequate drip loops shall be formed in the open wires between the service head and the point of attachment to the service drip. These service-entrance conductors shall extend 18 inches minimum out of the service head, not to exceed three feet in length to permit its connection to the Company's service drop so that the required 12-inch minimum clearance over the building will be obtained (see Figure 2–8 and Figure 2–9).

The Company shall make the connections between its service drop conductors and the supply end of the customer's service-entrance conductors.

Multiple sets of service-entrance conductors wired in parallel shall not be installed within a single service mast or riser.

7.3 Service-Entrance Raceways

No conductors except service-entrance conductors shall be installed in the service raceway except where continuity bond wires are required by local inspection authorities. Where a main service switch or disconnecting means is installed on the supply side of a group of meters, the conductors on the line side and load side of such disconnecting means shall be considered service-entrance conductors.

Auxiliary gutters and meter troughs containing service-entrance conductors are considered a part of the raceway. Only service-entrance conductors may run from such enclosures to metering equipment. Conductors from the load side of a meter or meter switch shall not re-enter the service-entrance raceway except in a separately buried section.

The main grounding connection from the grounding electrode or water pipe to the neutral conductor of the service may be made in an auxiliary gutter or meter trough where more than one meter is involved, provided the installation is made so as to minimize interference with equipment in the enclosure. Bonding conductors may be installed as required by inspection authorities.

7.4 Service-Entrance Cable

Certain standard-approved types of multiple conductor service-entrance cable with conductors of not less than #8 AWG copper or #6 AWG aluminum, and approved service head with fittings, may be installed where permitted by inspection authorities.

If approved by the local inspection jurisdiction, service-entrance cable could be installed on the exterior of the building. It may be installed concealed in wall spaces, but when so installed care shall be exercised to protect the cable against future mechanical injury and to allow for its replacement in case of failure.

Unless installed in continuous metal conduit, service-entrance cable shall not be run through any roof, or be installed in or through any attic space, under floor space, basement or other space within the building, in any of which the cable will be accessible to persons, except where the accessible portion is in the same room with the meter and is readily visible.

See the applicable drawings in ESR–5 for grounding requirements of inspection authorities.

Figure 2–1: Overhead Service Connections on Commercial and Industrial Buildings

Optional Points of Attachment of 0-600 V Service Drops

Company's Distribution Pole Line Serving the Tract

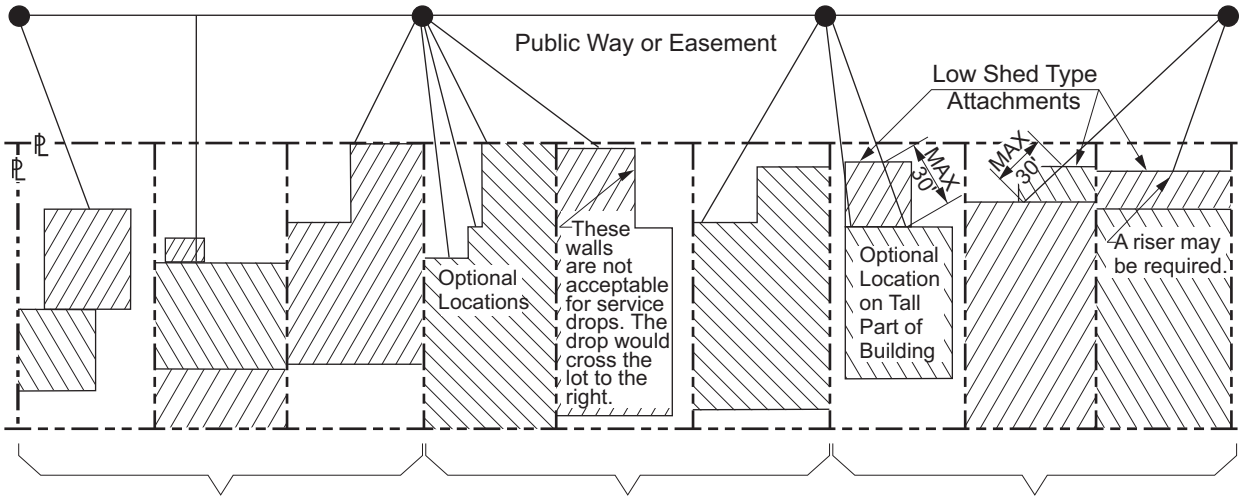

See Section 5.0, Location of Service-Drop Supports or Point-of-Building Attachment. When nearest wall faces line, drops pass over minor projections only.

Exhibit A

See Section 5.0, Location of Service-Drop Supports or Point-of-Building Attachment. On another wall. Drops crossing only the premises served.

Exhibit B

See Section 5.0, Location of Service-Drop Supports or Point-of-Building Attachment. Wall providing adequate height. Drops passing over low sheds which do not provide required ground clearance without a vertical structure.

Exhibit C

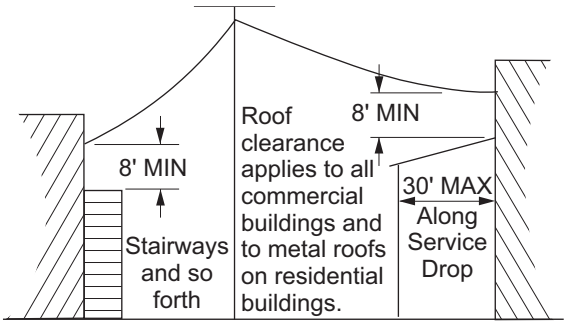

See Section 5.0, Location of Service-Drop Supports or Point-of-Building Attachment.

Exhibit D

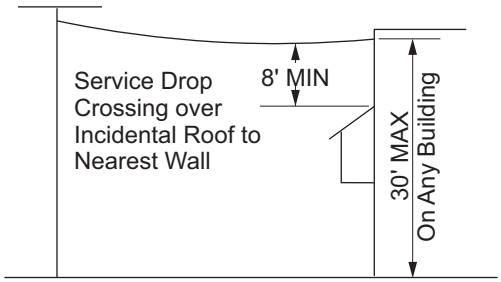

Maximum Height of Service Drop Attachments

Exhibit E

Note(s):

1. The Company shall be consulted for information with respect to the proper location of the point-of-service delivery on a building.
2. See ESR–5 for meter access and prohibited meter locations.

Figure 2–2: Overhead Service Connections on Residential Buildings

Points of Attachment of 0-600 V Service Drops

The points-of-service drop attachment illustrated below are acceptable only under the conditions specified in the text.

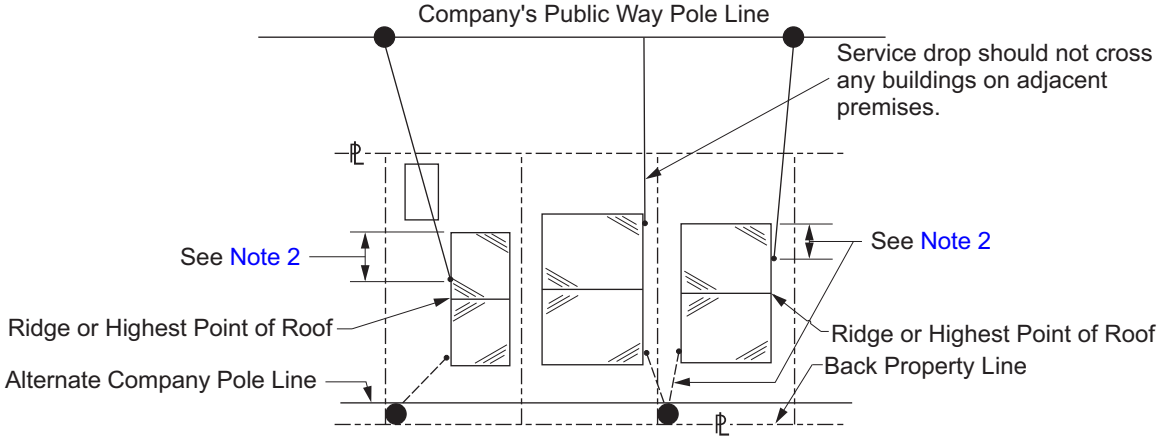

Service Drops Approaching Residential Building at Exterior Horizontal Angle

Exhibit A

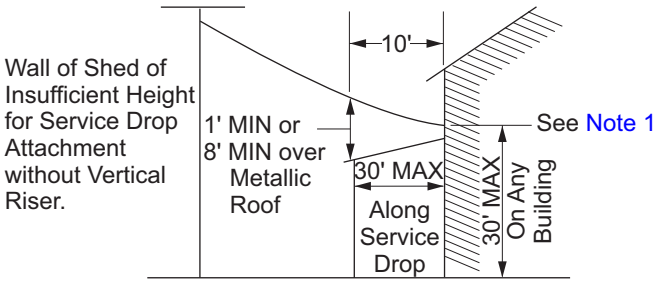

Service Drops Passing over Shed-Type Attachment to a Residential Building

Exhibit B

Note(s):

1. The California Public Utilities Commission (CPUC) approves residential triplex services to be 12 inches or more above non-walkable metallic patio drops (see Figure 2–2).
2. The service drop attachment to the building shall be the minimum practicable—not more than one-half the depth of the building and not beyond the highest point of roof (see Figure 2–2).
3. See ESR–5 for meter access and prohibited meter locations.

Figure 2–3: Methods of Attaching Service Drops to Buildings

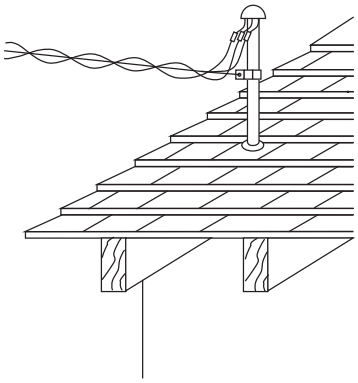

Exhibit A

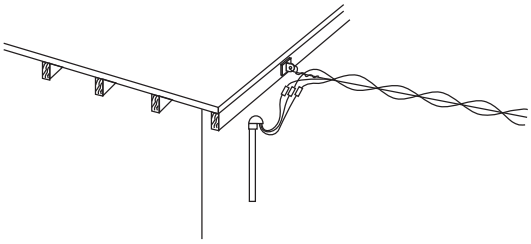

Exhibit B

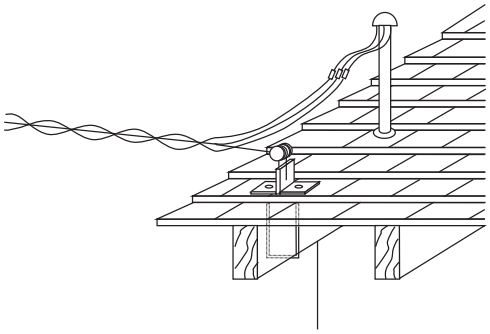

Exhibit C

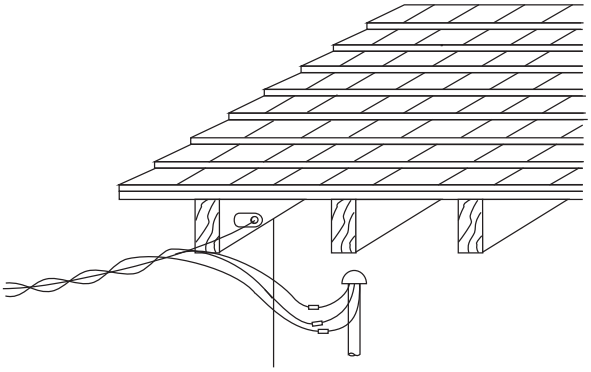

Exhibit D

Note(s):

1. All points-of-service drop attachment shall be on the wall, roof edge, verge, or exterior frame member nearest and facing the Company's pole line, except where other locations are permitted by these requirements.
2. The service head, wherever practicable, should be located one foot above the level of the point provided for service drop attachment. This arrangement is required by some inspection authorities.
3. For clearances, see Table 2–4, Figure 2–6, Table 2–2, Figure 2–7, Figure 2–8, Figure 2–9, and Figure 2–10.
4. Drip loops shall be formed and connections shall be made below the service entrance weatherhead to prevent the entrance of moisture into the service conduit.

Figure 2–4: Solid Wood Service Drop Attachment Risers

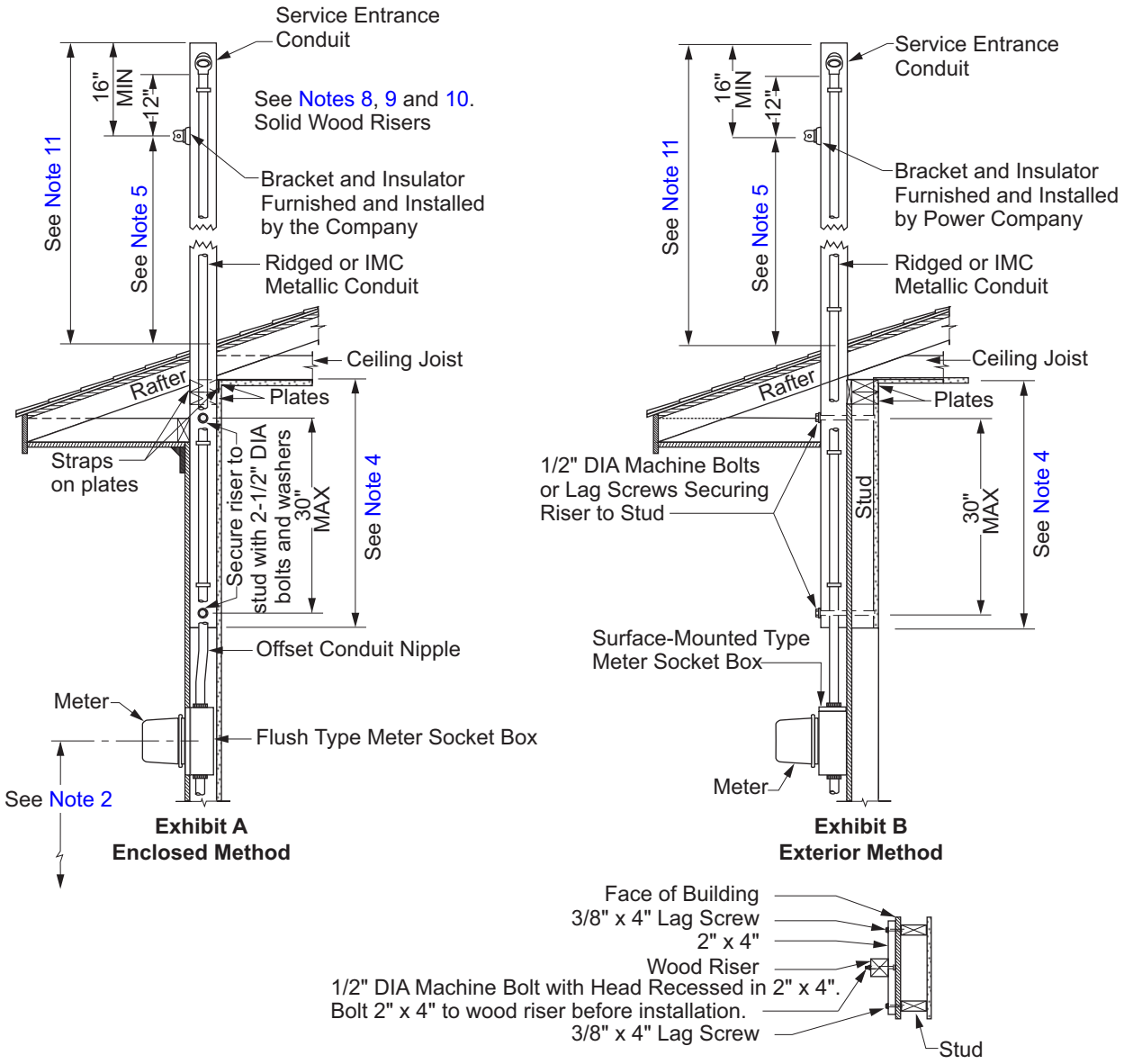

Note(s):

1. None of these wood risers shall be spliced or be of laminated construction (2" × 4", 2" × 6", and other boards). Nailed or bolted together boards are not acceptable.
2. The meter must be between the minimum of 4'-0" and 6'-3" maximum above grade. The height may be reduced to 3'-0" when the meter is enclosed in a meter closet.
3. Service riser attachments in heavy snow-loading areas shall have special construction. Contact the local Company office.
4. Where practicable, the riser timber should extend below the building plate a distance equal to its projection above—but in no case less than 36 inches, except where special provisions have been made for its anchorage.
5. For clearances of 0–600 V service drops, see Table 2–2 and contact the local Company office for details.
6. The riser should be on or not more than 18 inches back of the front face of the wall facing the Company's line.
7. Illustrations show buildings with slanting roofs. See Figure 2–9 for clearance of service drops of 0–600 V over flat-roofed commercial buildings.
8. See Figure 2–10, Exhibit A 4" × 4" post.
9. See Figure 2–10, Exhibit C 4" × 6" post.
10. See Figure 2–10, Exhibit D 6" × 6" post.
11. See Figure 2–10.

Figure 2–5: Conduit Service Drop Attachment Risers (Periscope Type)

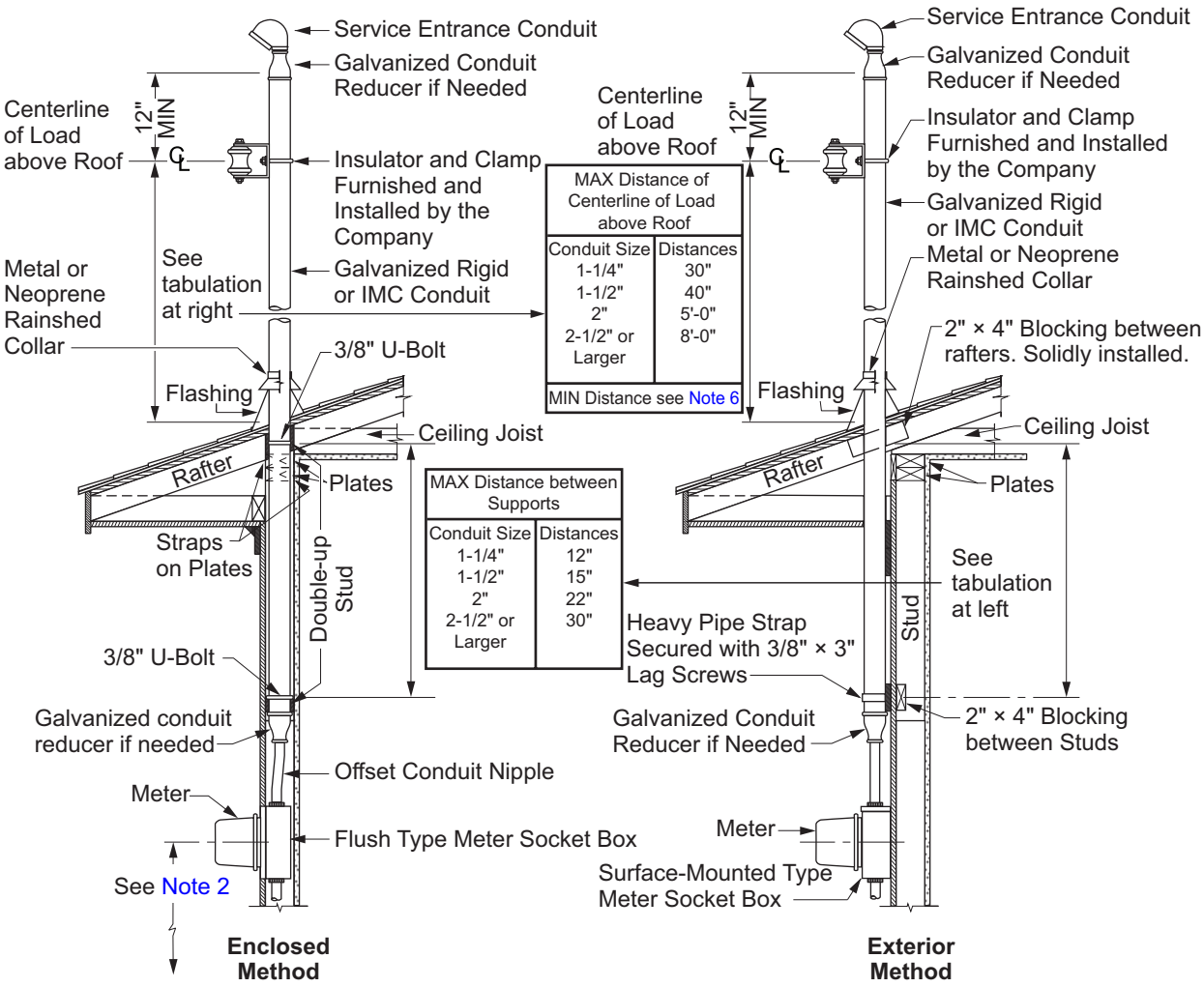

Note(s):

1. The above is a suggested method to obtain the required ground and roof clearances as required by CPUC G.O. 95. When this method is used, it will be acceptable to the Company, provided the dimensions and construction details are complied with the dimensions shown and are based on a service drop length of not more than 100 feet. Any service length greater than 100 feet must be approved by the Company.
2. The meter must be between the minimum of 4'-0" and 6'-3" maximum above grade. The height may be reduced to 3'-0" when the meter is enclosed in a meter closet.
3. The Company will not be responsible for any damage to the building caused by rain or structural failure.
4. The riser should be on or not more than 18 inches back of the front face of the wall facing the Company's line.
5. Install rigid steel or IMC conduit only for this application.
6. The minimum distance of centerline of load above roof is specific to each location. In all cases, this distance shall not be less than 12 inches minimum.
7. No couplings will be permitted between the top of the riser and the lowest point of support for conduit sizes 1-1/4 inches to two inches inclusive. If a coupling is necessary in 2-1/2 inches or larger conduit to secure the maximum height, the coupling shall be installed at the upper-end near the service-entrance conduit.
8. Only power service drop shall be permitted to be attached to a service mast or riser per National Electrical Code (NEC) Section 230–28.
9. The service riser attachments in heavy snow-loading areas shall have special construction. Call the local Service Planning Office for details.
10. Condulets (e.g. LB, LL, LR) with removable covers are not allowed as part of a service entrance conduit system.

Figure 2–6: Service Drop Clearance — Residential Premises

Services of 0–600 V

These minimum clearances apply to the lowest point-of-service drop sag.

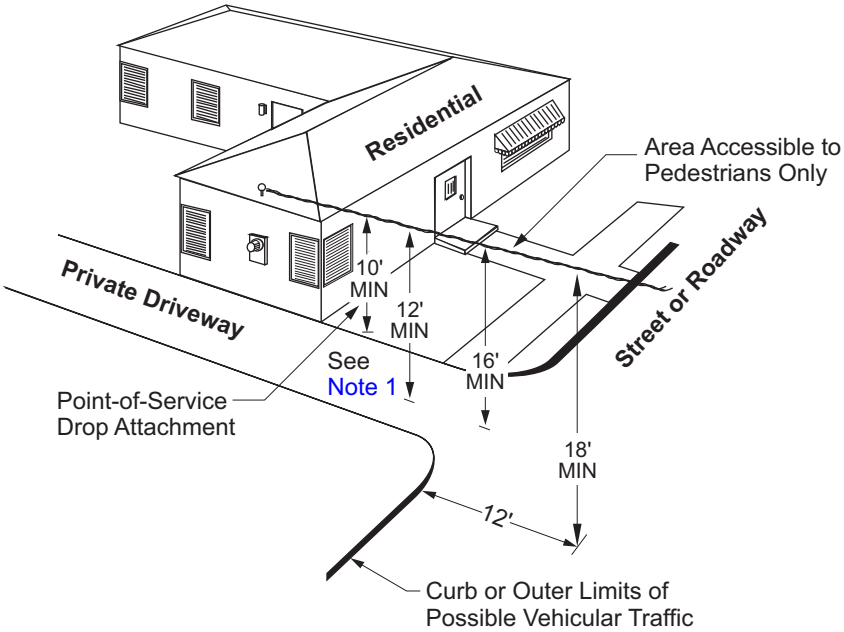

Note(s):

1. Service wire can be 10 feet over residential driveway, if conductor is insulated triplex. Refer to *G.O. 95*, Rule 54.8, B2.
2. The radial clearance between supply service drop conductors and communications service drop conductors shall not be less than 24 inches. Where within 15 feet of the point of attachment of either service drop on a building, this clearance may be further reduced but shall not be less than 12 inches.
3. The CPUC approves residential triplex services to be 12 inches or more above non-walkable metal patio roofs.
4. The service head shall in no case be less than ten feet or more than 30 feet above the exterior grade level nearest such head.
5. Minimum clearances indicated are as required by the Rules for Overhead Line Construction of the CPUC (*G.O. 95*). The Commission has ruled that a three-unit or larger apartment house is a commercial building and, therefore, requires commercial service clearances. Commercial clearances shall be provided over private or public driveways to three or more houses. For vertical clearances see Table 2–4.
6. The point-of-service drop attachment on any riser shall in no case be more than 18 inches back of the front face of the wall facing the pole line to which the drops would be attached.

Figure 2–7: Clearance of 0–600 V Services from Doors, Exits, Windows, and Fire Escapes

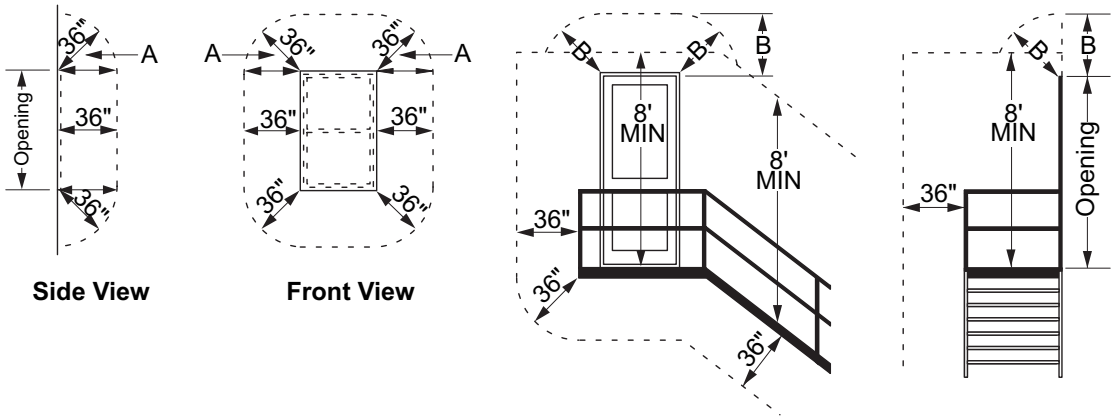

Note(s):

1. No supply service wires are permitted within the shaded area.
2. The minimum clearances indicated comply with "The Rules for Overhead Line Construction of the CPUC (*G.O. 95*)."
3. Dimension "A" may be less than 36 inches, but shall be the maximum practicable.
4. Dimension "B" may be less than 36 inches provided that it is the maximum practicable and that the eight-foot minimum vertical clearances indicated are obtained.

Figure 2–8: Minimum Vertical Clearance of Service Drops — Industrial or Commercial

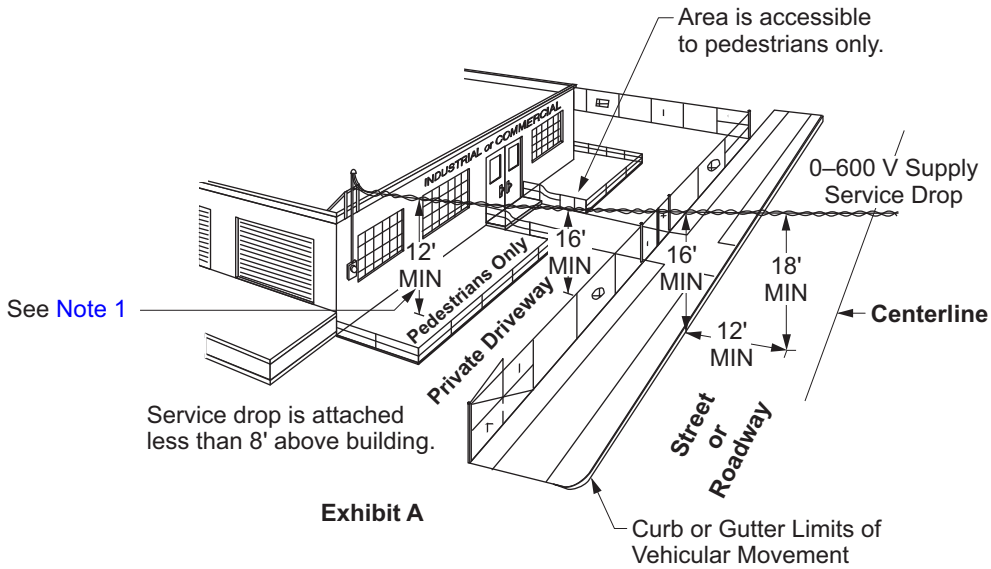

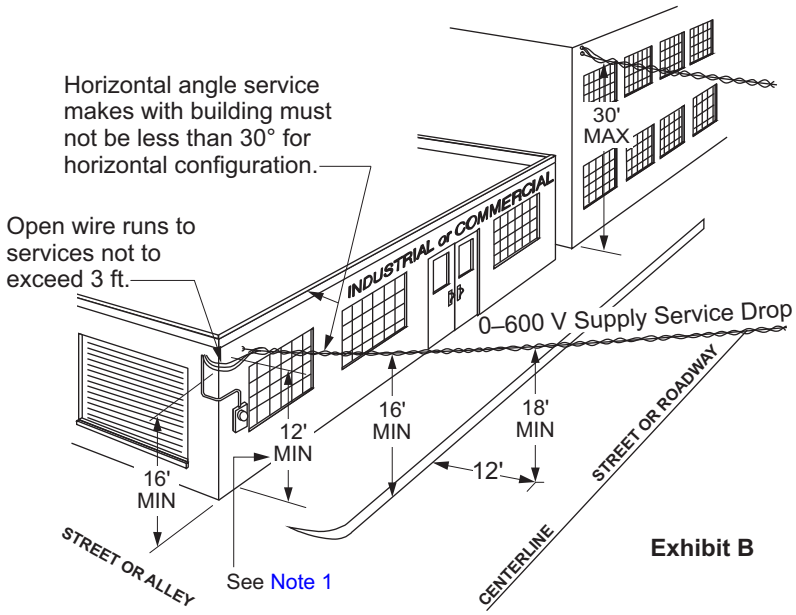

Note(s):

1. Service wire can be 10 feet over walkway, if conductor is insulated triplex. Refer to *G.O. 95*, Rule 54.8, B2.
2. Clearance above structures upon which anyone can walk shall be 8-feet minimum.
3. Clearance of 0–600 V service drops from doors, windows, exits, fire escapes, and so on shall be as shown in Figure 2–7.
4. Clearance of 0–600 V service drops over railroad tracks, areas capable of being traversed by agricultural equipment. See Table 2–4.
5. Where service drops approach a building wall at an angle of less than 60 degrees, the spacing of the insulators at the point of attachment in horizontal configuration should be increased so as to provide at least six inches conductor separation. Vertical configuration is normally preferable where the angle between the service drop and the wall is less than 60 degrees and is acceptable for any angle.
6. See Figure 2–9 for exceptions for 0–600 V service drops.

Figure 2–9: Service Drop Clearance — Commercial or Industrial Premises

Services of 0-600 V
These minimum clearances apply to the lowest point-of-service drop sag.

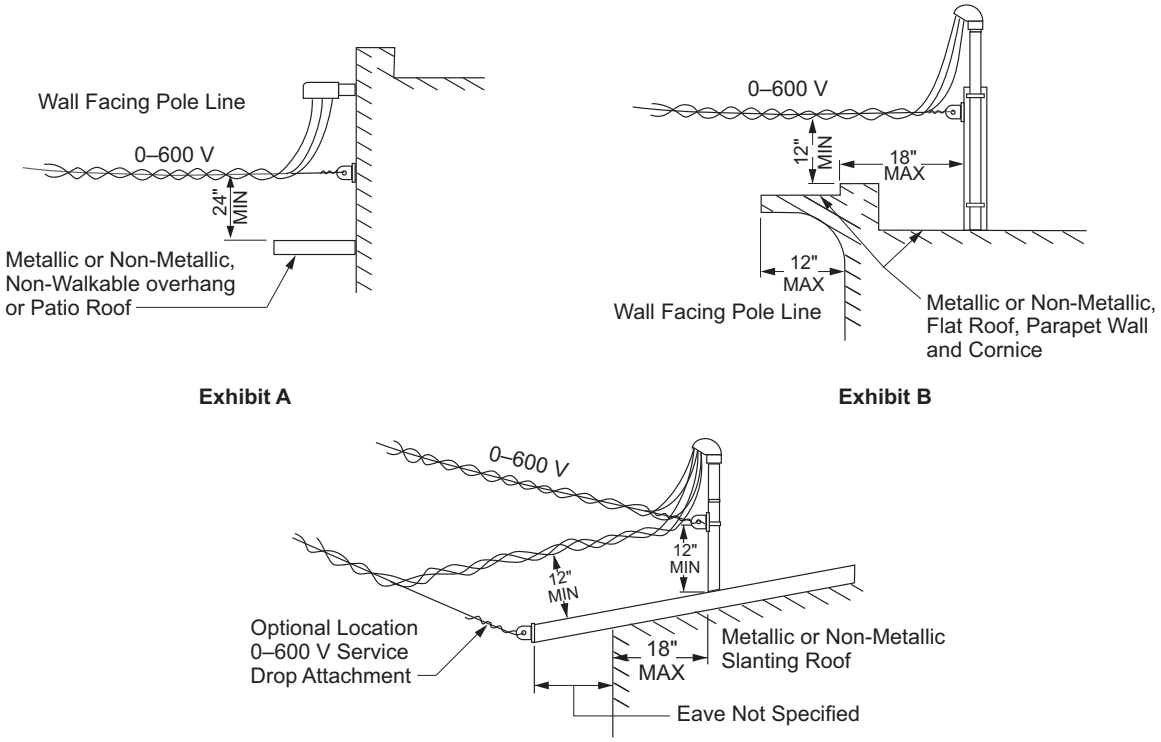

Note(s):

1. On premises used for industrial and commercial purposes, service drops shall be maintained at a vertical clearance of not less than eight feet over all or any portions of buildings and structures. **Exception**: Service drops of 0–600 V may be less than 8 feet, but not less than 12 inches above the metallic or non-metallic cornice, decorative appendage, eave, roof, or parapet wall of the building served provided. The current-carrying service conductors are insulated for the voltage being supplied (refer to *G.O. 95*, Rule 20.8-G) and the point of attachment of the service drops is not more than 18 inches back of the front face of the building wall facing the pole line from which the service drops originate.
2. Service drops are not required to clear buildings any specific horizontal distance, but shall be so installed that they clear fire escapes, exits, windows, doors, and other points at which human contact might be expected, a horizontal distance of not less than three feet. Where service drop crosses over metallic or non-metallic, non-walkable overhang or patio cover, the vertical clearance may be less than 8 feet, but not less than 24 inches, providing such service drops consist of abrasion-resistant cables and are insulated for the voltage being supplied.
3. The above exhibits illustrate applications of *G.O. 95*, Rule 54.8-B4(a) to installations of 0–600 V service drops on various types of buildings on commercial or industrial premises.
4. The service drops shown are in flat configuration. The minimum vertical clearance of 12 inches applies to the lowest conductor of a service drop.

Figure 2–10: Clearance of Timber Risers on Buildings

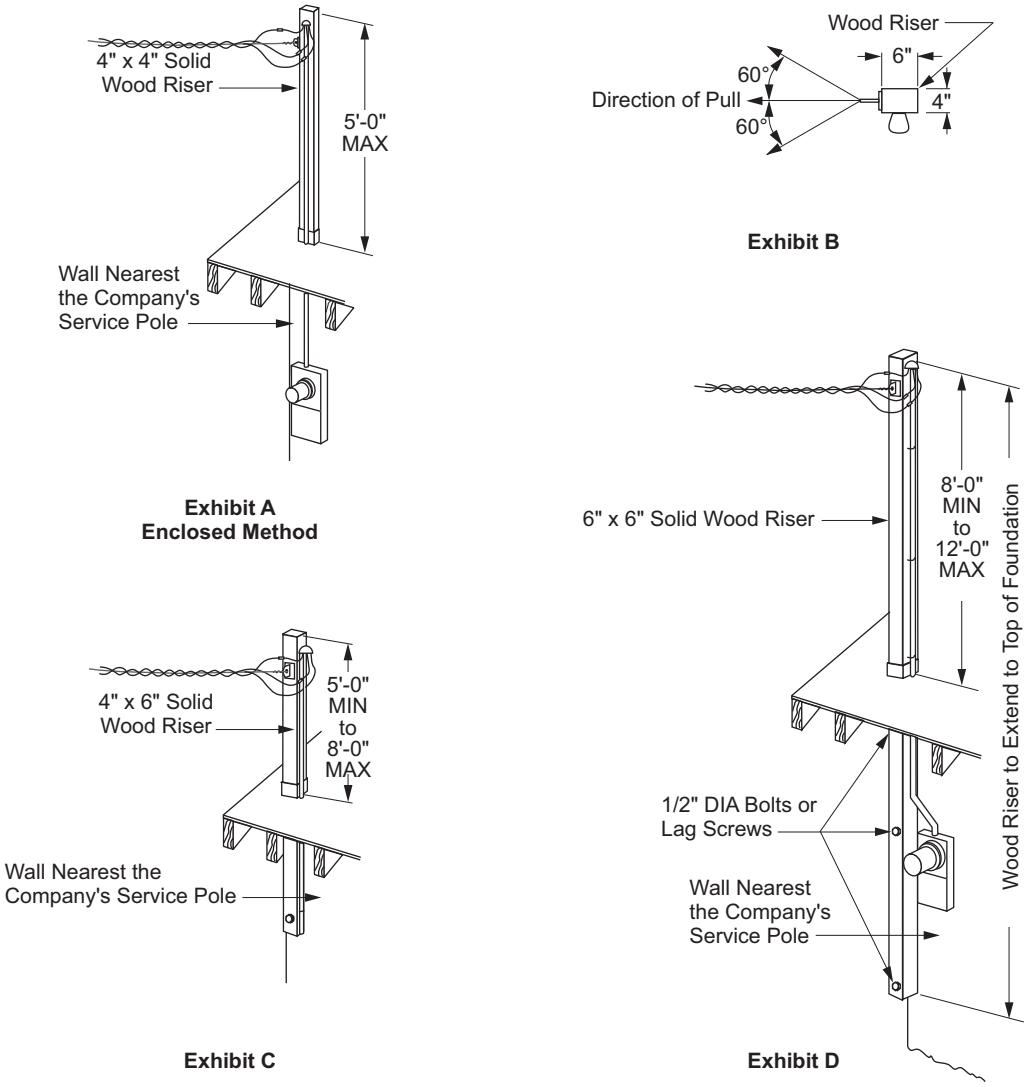

Note(s):

1. Service riser attachments in heavy snow-loading areas shall have special construction. Contact the local Service Planning Office (see ESR–1) for information. The service head, wherever practicable, should be located one foot above the level of the point provided for service-drop attachment. Where the point of attachment is located above the service head, drip loops shall be formed and connections shall be made below the service head to prevent the entrance of moisture into the service conduit.
2. For clearances, click the following references:
   - Figure 2–2
   - Table 2–4
   - Figure 2–6
   - Table 2–2
   - Figure 2–7
   - Figure 2–8
   - Figure 2–9
   - Figure 2–10

7.5 Swimming Pool Clearances

The installation of conductors over or adjacent to swimming pools and the installation of pools beneath conductors shall be avoided where practicable. Where such installations are made, the diagrams in Figure 2–11 illustrate the minimum clearances required by the CPUC. Prior to installing any swimming pool in proximity to overhead conductors, contact the local inspection agency regarding applicable local ordinances.

The minimum clearances for supply conductors of all voltages in proximity to swimming pools are specified in *G.O. 95*, Rule 54.4 A3. Consult the local Service Planning Office for details.

Figure 2–11: Swimming Pool Clearances

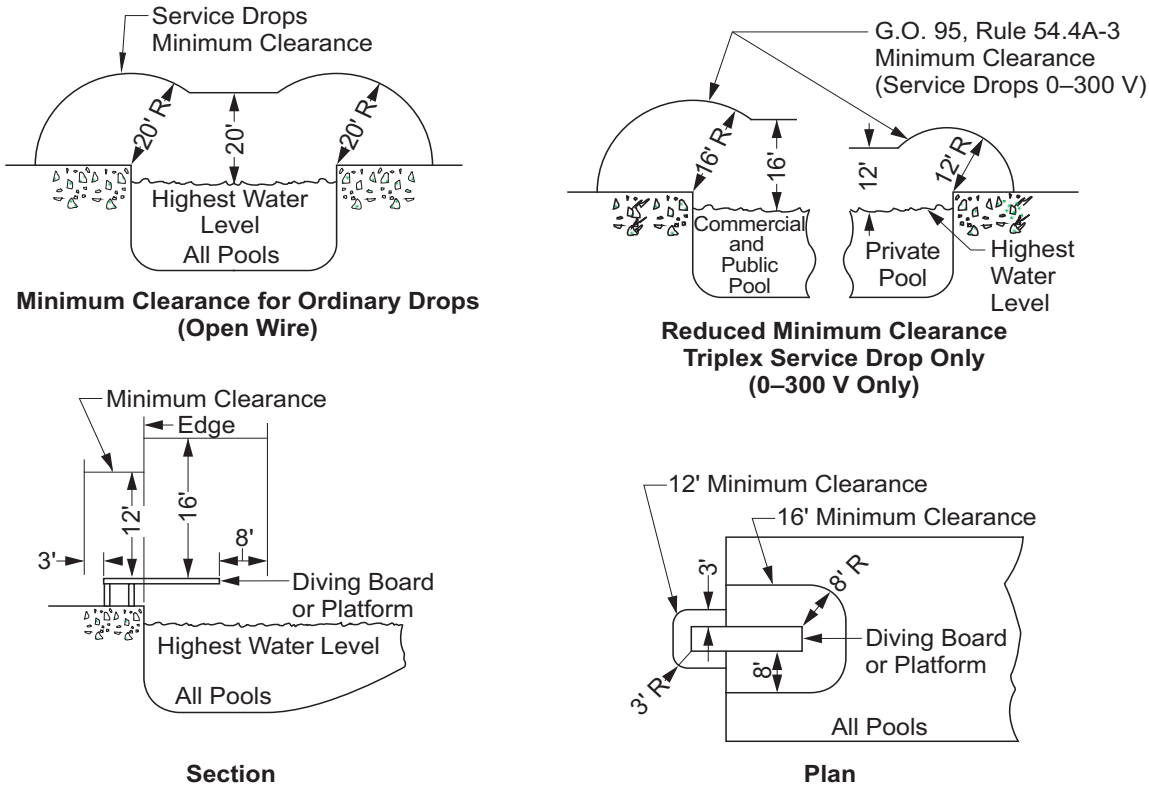

Minimum Clearance for All Drops above or Adjacent to Diving Boards or Platforms

7.6 Minimum Allowable Clearances for Services Drops

The following tables show the minimum allowable clearances for service drops above ground, and structures.

Table 2–2: Minimum Allowable Vertical Clearance over Buildings and Structures — 0–600 V Service Drops — Residential

Clearance From	Building Served	Other Buildings on Premises Served (ft)	Buildings on Other Premises (ft)
Metal roof less than 37°[a/]	8 ft vertical[b/]	8	8
Metal roof 37° or more	2 ft vertical[b/]	2	8
Non-metallic roof less than 37°	[c/]	2	8
Non-metallic roof 37° or more	[c/]	2	2
From fire escapes, exits, openable windows, doors, and other points at which human contact might be expected	3 ft horizontal, See Figure 2–7.	—	—

[a/] A roof with a 3/8 pitch. See Figure 2–12.

[b/] Residential triplex services may be installed a minimum of 12 inches above non-walkable metallic or non-metallic patio roofs.

[c/] A minimum of 12 inches, but the greatest practicable clearance should be obtained.

Figure 2–12: Pitch of Roof

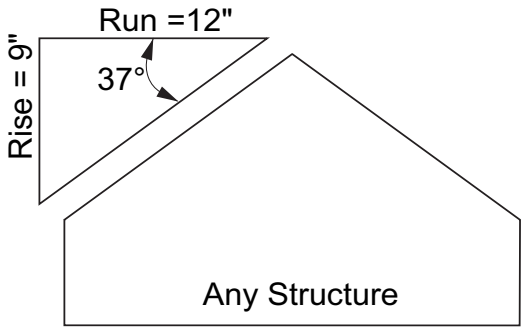

Table 2–3: Minimum Service Cable Clearance Aboveground

Location	Distance (ft)
At center of street	18
At curb line	16
Over commercial or industrial driveways or parking areas	16
Over residential driveways	12
Over agricultural areas	15
Over trolleys, railroads or for other special conditions	Consult the Company representative.

Table 2–4: Vertical Clearances above Railroads, Thoroughfares, and Ground

	Condition	Minimum Clearance (ft)
1.	Crossing above R.R. tracks without overhead trolley wire	25
2.	Crossing above R.R. tracks with overhead trolley wire: • Above rails where freight cars are transported • Above rails where freight cars are not transported • In each case, the service drop must clear trolley wires by not less than...	 26 23 4
3.	Crossing above private driveways, or other areas accessible to vehicles, see Figure 2–6. If 12 ft clearance requires a structure on the building served, 0-300 V drop may have a clearance of...	12 10
4.	Crossing above areas accessible to pedestrians only. See Figure 2–6. If 10 ft clearance requires a structure on the building served, 0-300 V drops may have a clearance of... If 8-1/2 ft clearance also requires a structure on the building served, the basic 10 ft clearance must be maintained.	10 8-1/2
5.	Crossing above areas capable of being traversed by agricultural equipment	15
6.	Crossing above thoroughfares. See detailed requirements on Figure 2–6.	18

8.0 Customer-Owned Service and Meter Poles

8.1 General Requirements for Permanent and Temporary Service 0–600 V

The detailed minimum requirements for customer-owned service and meter poles to which temporary or permanent service is to be extended by the Company are shown in Figure 2–13 and Figure 2–15. These pages are in compliance with the Rules of G.O. 95, the CPUC, and the California Construction Safety Orders, where applicable.

Service will not be connected to any customer-owned service pole or service and meter pole which do not at least meet the minimum requirements shown on these pages. In some areas, the requirements of local inspection authorities may exceed these requirements. When required, permit and inspection must be obtained from city, county, or state inspection authorities before service will be connected by the Company. Pole locations must be approved by the local Service Planning Office. The Company is not responsible for the location assumed by the contractor or customer.

Customer's service may be taken from the receptacles or from top of pole with a second conduit run up the pole.

All conduit fittings to be rain-tight. Wire with suitable insulation, not less than #8 AWG, shall be used in the conduit.

Service switch to be rain-tight and of proper rating for load to be served. Switch cover must be locked if enclosure contains exposed live parts. Service entrance circuit breaker may be used in lieu of a fused switch, unless threaded connections are employed. All sections of the service equipment shall be adequately bonded.

All boxes must be rain-tight, where receptacles are used. They shall be of proper rating for load to be served. Receptacles used to connect portable tools shall be of the three-pole type for single-phase motors and the four-pole type for three-phase motors. One clip is to be used for ground connections. Where more than one voltage is used, the receptacles shall not be interchangeable.

When single-phase service larger than 100 A is required, or three-phase service is desired, consult the Company.

The service pole shall be placed at least 10 feet from the location of the Company's pole, from which service is to be connected, and where practicable at least 10 feet laterally from the center of any pole line.

The service pole shall be placed within 100 feet from the location of the Company's pole from which service is to be connected.

The service pole shall be so located that the topography of the land, buildings, or other obstructions will not reduce required clearances per *G.O. 95*, Table 1.

The Company will furnish and install the meter, service drop, and service drop wire holder. All other equipment, including the pole, shall be furnished and installed by the customer.

Floodlights, signs, ropes, and similar equipment shall not be attached to service and meter poles.

Communication service drops shall not be attached to service and meter poles unless **all** applicable *G.O. 95* clearances are complied with.

The drawings in Figure 2–13 and Figure 2–15 illustrate a typical socket meter installation for single- and three-phase 0-600 V service. The actual arrangement of the meter socket and service equipment may be varied, provided that all of the requirements shown on these pages and all other Electrical Service Requirements of the Company are complied with.

All customer-owned service poles, by supporting the Company's overhead service conductors, are subject to the rules of *G.O. 95*, Overhead Line Construction of the CPUC, except those poles which are so attached to, or which are so incorporated into a building or structure that they are not capable of being climbed.

The following is presented for assistance in correct and uniform interpretation of the requirements for customer-owned service and meter poles as specified in Figure 2–13 and in Figure 2–15. These requirements are minimums with relation to the nature and composition of approved materials, together with clearance dimensions, and other features. Deviations from the requirements of these pages of any nature, including substitution of any types of material other than specified, cannot be granted. Service will not be connected to any installation which is not in compliance.

A. Temporary Service (One Year or Less)

Requirements for Temporary Service (one year or less) are shown in Figure 2–13. The preferred location for temporary metered power poles shall be located where there is Company vehicle access and that the service drop maximum span length is 100 feet. If Company vehicle access cannot be obtained, contact the local Service Planning Office for meter spot location.

A "self-supporting timber 6" × 6" × 20' minimum" is required for the customer's service pole. No particular variety or grade of timber is specified, but it is intended that it shall be sound, and free from large knots or other imperfections which would cause undue impairment of its strength.

A 5' × 3/4" Schedule 40 PVC conduit will be furnished and installed by the customer. This conduit must be permanently secured with three pipe straps to the butt and flush to the bottom of the pole. The bottom of the conduit must be permanently capped and the top cap must be removable (see Figure 2–13). This provides a means of inserting a measuring device in the conduit to check the actual setting depth.

The customer must set the service pole in natural soil. The backfill must be tamped to a minimum compaction of 90 percent within a two-foot radius of the pole.

The customer shall furnish and install a ten-foot service drop stinger. The service drop stinger shall be #4 aluminum triplex for a 100 A service and 1/0 aluminum triplex for a 200 A service.

A timber is by dictionary definition “a squared or dressed piece of wood, usually of large dimensions.” Any wood pole-type structure—laminated or assembled as a group of separate pieces—does not comply with these requirements. A single timber **only** complies. The pole butt shall be treated with a preservative.

B. Permanent or Temporary Service Requirements

Permanent or Temporary Service Requirements are shown in Figure 2–15. A “25-foot pole with five-inch minimum top diameter” is required. This means the standard round full-length commercially pressure-treated with a chemical preservative pole in general use for line construction. It is the intent that such pole shall be equal in quality and extent of treatment to a pole which would be used by SCE in the area concerned. This will permit the optional use of commercially butt-treated standard round Cedar poles in the San Joaquin Valley and desert areas. Full-length treated poles shall be used elsewhere. Brush-treated poles do not comply with these requirements. Sawed timbers are not permitted under any circumstances.

A 6' × 3/4" Schedule 40 PVC conduit will be furnished and installed by the customer. This conduit must be permanently secured with three pipe straps to the butt and flush to the bottom of the pole. The bottom of the conduit must be permanently capped and the top cap must be removable (see Figure 2–15). This provides a means of inserting a measuring device in the conduit to check the actual setting depth.

The customer must set the service pole in natural soil. The backfill must be tamped to a minimum compaction of 90 percent within a two-foot radius of the pole.

In locations where 25-foot poles of the required type are not readily purchasable from other sources, such poles may be purchased from the Company. Requirements are in Figure 2–15. Contact the local Service Planning Office for details.

8.2 Wood Brace for Temporary Service Requirements for One Year or Less

Where the soil is not firm (for example, unable to obtain a 90 percent compaction, sandy, or imported soil, and so forth), bracing shall be required to ensure the stability of the temporary power pole. The wood brace shall not be smaller than a 2" × 4" timber and shall be secured to the pole with a minimum 1/2-inch bolt (see Figure 2–14).

Figure 2–13: Temporary Service Requirements (Service for One Year or Less)

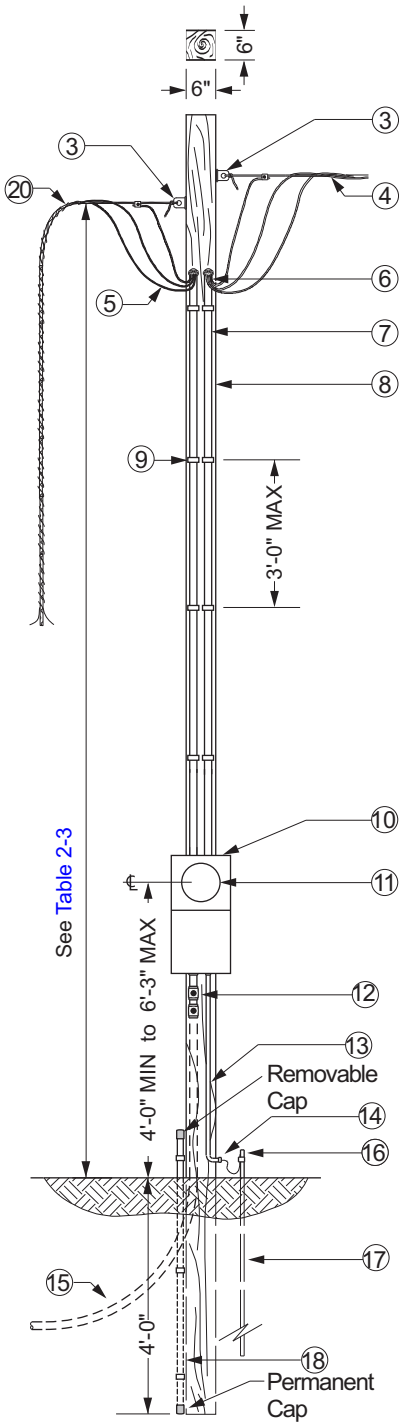

Note(s):

1. The preferred location for temporary metered power poles shall be where there is Company vehicle access and the service drop maximum span length is 100 feet. If Company vehicle access cannot be obtained, contact the local Service Planning Office for meter spot location.
2. Service drop furnished and installed by the Company. The Company's service drop maximum span length is 100 feet.
3. Wire holder or rack furnished and installed by the customer.
4. Customer's line.
5. Not less than 18 inches of wire outside service head.
6. Weatherproof service entrance caps.
7. Minimum 3/4-inch PVC conduit Sch. 40.
8. Self-supporting timber 6" × 6" × 20'-0" minimum (butt-treated).
9. Fasten conduit securely to pole.
10. For type of meter receptacle, and the number of socket terminals, see ESR–5.
11. Meter will be furnished and installed by the Company. Self-contained 300/400 A (Class 320) type meter panels are not acceptable for temporary service. A safety socket box with factory installed test/bypass blocks, as detailed in ESR–5, shall be provided for all three-phase installations.
12. Weatherproof boxes and receptacles.[3/]
13. Armored ground wire or minimum of 1/2-inch rigid conduit or wood molding over ground wire.
14. Ground wire to be #8 AWG minimum.
15. Where customer's feeder is to be underground, install conduit as indicated by dashed lines and as required by the NEC.
16. Approved ground clamp and fitting must be accessible. Conduit must extend to ground rod to protect ground wire from mechanical injury.
17. Ground wire from pole to electrode shall be enclosed in galvanized ridged conduit, or equivalent mechanical protection. If a ground rod is used, the following minimum requirements apply:
    - ☐ Diameter of rod: 3/4 inch, if iron rod or galvanized pipe
    - ☐ 1/2 inch, if solid rod of brass, copper, or copper-covered steel.
    - ☐ Drive to minimum depth of 8'-0" below ground surface.
    - ☐ Refer to the local inspection agency for alternate or additional requirements.
18. A 5' × 3/4" Sch. 40 PVC conduit will be furnished and installed by the customer. This conduit must be permanently secured with three pipe straps to the butt and flush to the bottom of the pole. The bottom of the conduit must be permanently capped and the top cap must be removable.
19. The customer must set the service pole in natural soil. The backfill must be tamped to a minimum compaction of 90 percent within a 2-foot radius of the pole.
20. The customer shall furnish and install a 10-foot service drop stinger. The service drop stinger shall be #4 aluminum triplex for a 100 A service and 1/0 aluminum triplex for a 200 A service.
21. Customer's service pole shall be 6 feet or more away from any well.

[3/] Refer to the local inspection agency and the California Electrical Safety Order for ground fault circuit protection requirements.

Figure 2–14: Wood Brace for Temporary Service Requirements (Service for One Year or Less)

Where the soil is not firm (for example, unable to obtain a 90 percent compaction, sandy, or imported soil, and so forth), bracing shall be required to ensure the stability of the temporary power pole. The wood brace shall not be smaller than a 2" × 4" timber and shall be secured to the pole with a minimum 1/2-inch bolt.

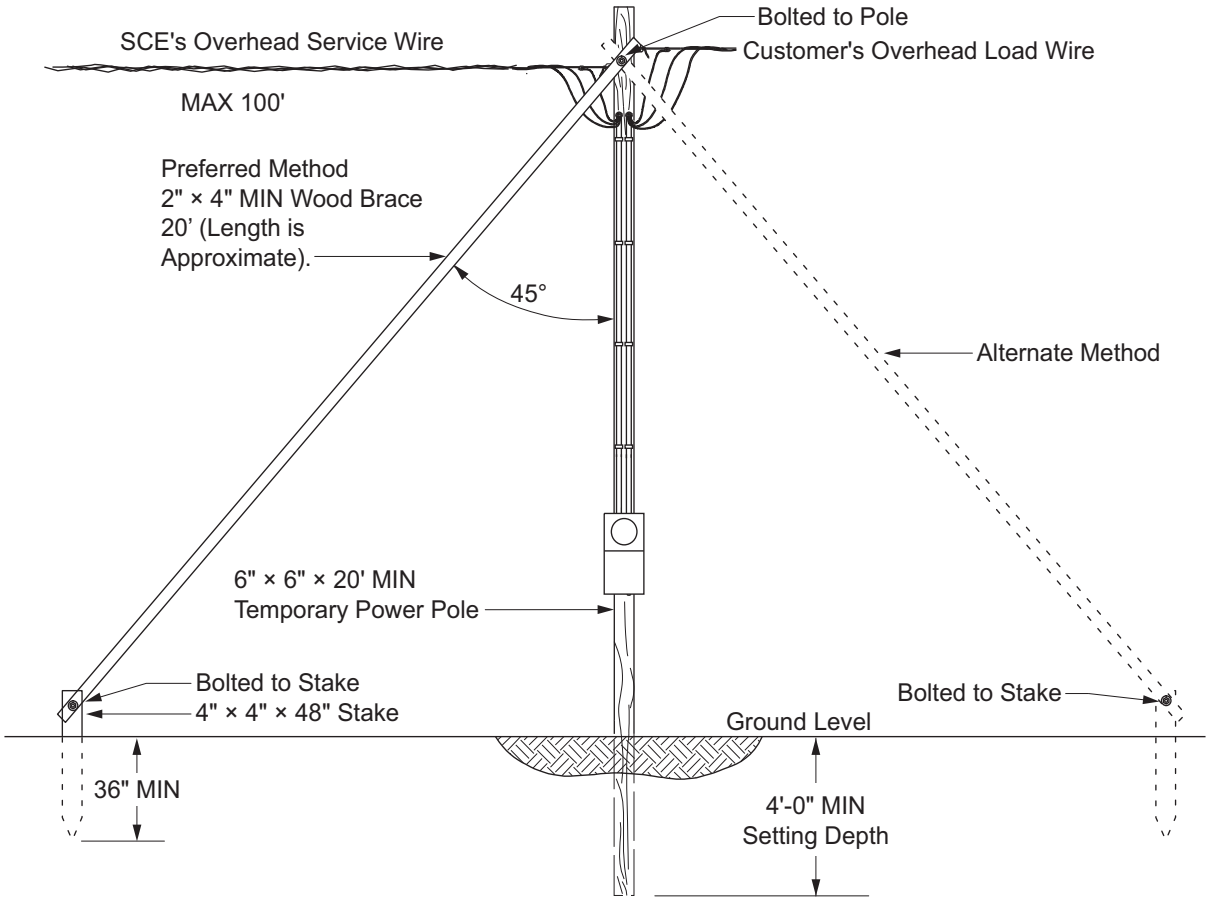

Note(s):

1. Place wood brace in-line with service drop.
2. Bolt the 2" × 4" × 20' MIN wood brace 6 inches below the top of the 6" × 6" × 20' timber and six inches below top of the 4" × 4" × 48" stake with a minimum 1/2-inch bolt.
3. If the location of the temporary power pole prohibits placing the wood brace in the preferred method, the alternate bracing method can be used.
4. Soil conditions may require setting the temporary power pole deeper than four feet. Should the temporary power pole be set deeper than the four-foot requirement, clearances shall be maintained for the service drop (see Figure 2–8).
5. The bracing method can be used if the service conductor is greater than #4 aluminum triplex.
6. Customer's service pole shall be 6 feet or more away from any well.

Figure 2–15: Customer-Owned Permanent or Temporary Service Pole

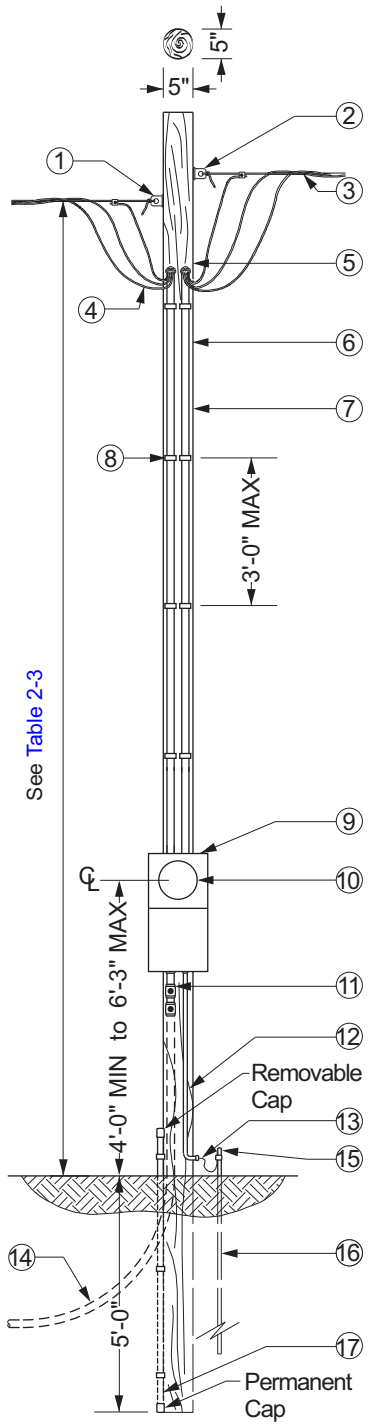

Note(s):

1. The preferred location for customer-owned permanent or temporary service poles shall be located where there is Company vehicle access. If Company vehicle access cannot be obtained, contact the local Service Planning Office for meter spot location. Service drop and wire holder or service rack shall be furnished and installed by the Company. The Company's service drop maximum span length is 100 feet.
2. Wire holder or rack furnished and installed by the customer.
3. Customer's line.
4. Not less than 18 inches of wire outside service head.
5. Weatherproof service entrance caps.
6. Minimum 3/4-inch PVC conduit Sch. 40.
7. A 25-foot pole with a five-inch minimum top diameter treated with a chemical preservative.
8. Fasten conduit securely to pole.
9. For type of meter receptacle, and the number of socket terminals, see ESR–5.
10. Meter will be furnished and installed by the Company. Self-contained 300/400 A (Class 320) type meter panels are not acceptable for temporary service. A safety socket box with factory installed test/bypass blocks, as detailed in ESR–5, shall be provided for all three-phase installations.
11. Weatherproof boxes and receptacles.[4/]
12. Armored ground wire or minimum of 1/2-inch rigid conduit or wood molding over ground wire.
13. Ground wire to be #8 AWG minimum.
14. Where customer's feeder is to be underground, install conduit as indicated by dashed lines and as required by the NEC.
15. Approved ground clamp and fitting must be accessible. Conduit must extend to ground rod to protect ground wire from mechanical injury.
16. Ground wire from pole to electrode shall be enclosed in galvanized ridged conduit, or equivalent mechanical protection. If a ground rod is used, the following minimum requirements apply:
    - ☐ Diameter of rod: 3/4 inch, if iron rod or galvanized pipe
    - ☐ 1/2 inch, if solid rod of brass, copper, or copper-covered steel.
    - ☐ Drive to minimum depth of 8'-0" below ground surface.
    - ☐ Refer to the local inspection agency for alternate or additional requirements.
17. A 6' × 3/4" Sch. 40 PVC conduit will be furnished and installed by the customer. This conduit must be permanently secured with three pipe straps to the butt and flush to the bottom of the pole. The bottom of the conduit must be permanently capped and the top cap must be removable.
18. The customer must set the service pole in natural soil. The backfill must be tamped to a minimum compaction of 90 percent within a two-foot radius of the pole.

[4/] Refer to the local inspection agency and the "California Electrical Safety Order" for ground fault circuit protection requirements.

Figure 2–16: Optional Customer-Owned Service and Meter Pole

Permanent or Temporary

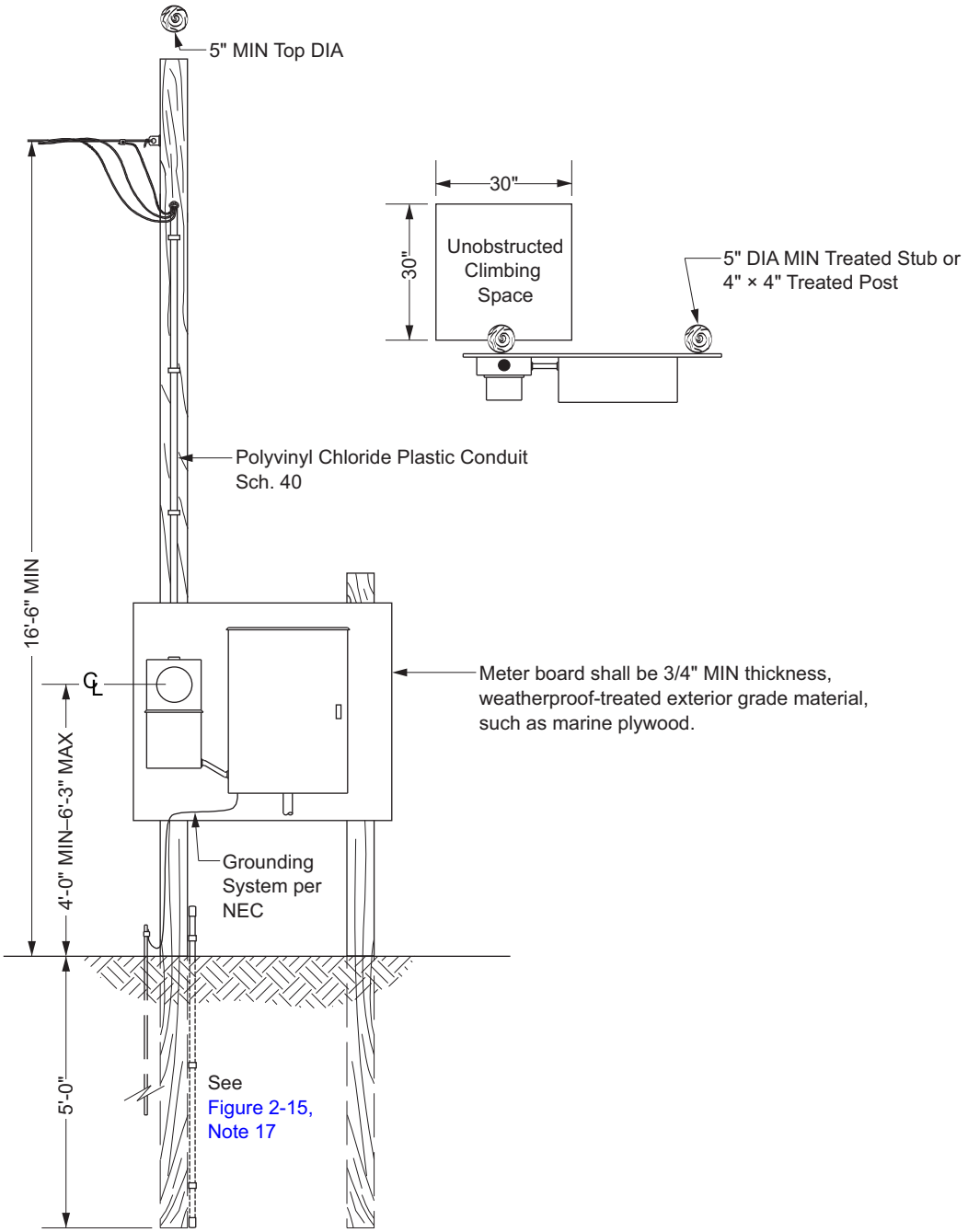

Note(s):

1. Customer's service pole shall maintain a 6-foot minimum clearance from any well.
2. A 36"x36" concrete working space is required in front of 400 A CT-rated meter panels for any pole installed for one year or longer.

9.0 High-Voltage Connections 2,400 V; 4,160 V; 4,800 V; 7,200 V; 12,000 V; 16,500 V; and 33,000 V

9.1 General

To properly coordinate the provisions of these requirements with the installation of overhead services for the direct delivery of energy to the customer at any voltage exceeding 600 V, each installation will necessitate special engineering. This will require that the engineer, contractor, or customers' representative consult the Company with respect to all pertinent details prior to planning such high-voltage service installation.

Overhead service will not be supplied in an area designated as an "Underground District," except where required by the Company for its operating necessity.

Underground service is recommended for all high-voltage services to buildings.

9.2 Service

Upon a genuine application for service, and where the Company's distribution pole line is located on the customer's premises, or on a street, highway, lane, alley, road, or private easement immediately contiguous thereto, the Company will furnish and install a single span of supply conductors from its pole to the customer's first approved permanent support, provided such support is of a type and is so located that such conductors may be installed in accordance with good engineering practice, and in compliance with the requirements of the Company, together with all applicable laws, ordinances, rules, and regulations, including those governing clearances and points of attachment.

The customer shall, at their own expense, upon request by the Company, provide a new support in a location approved by the Company, for the termination of the Company's existing supply conductors, together with such service-entrance conductors as may be required in order to comply with the foregoing, whenever any of the clearances required from such conductors to the ground or to any object between the Company's existing serving pole and (or at) the point of their termination on the customer's support, become impaired by reason of any changes made by the owner or tenant of the premises.

A Company representative will, in each case, designate all details of the manner in which a high-voltage overhead service will be extended to and terminated on the customer's structure. The Company will furnish and install the service dead-end insulators on the customer's structure.

9.3 Single-Phase Service Capacity

Normally, the maximum permissible single-phase load permitted to be connected to any one phase of the Company's system is as follows: 2,400 V, single phase—150 kVA; 12 kV or 16 kV, single phase—1000 kVA. These values may be increased where special facilities are installed by the Company.

9.4 Three-Phase Service Capacity

The maximum main switch capacity for a 2400 V or 4160 V, three-phase service is 3000 A. Where greater capacity is required, two or more services may be installed with totalized metering. For higher-voltage services, consult the Company.

9.5 Single Point-of-Service Delivery

Normally, only one point-of-service delivery will be established for the same phase and voltage class of load to be served on any single continuous premises. The Company shall be consulted with respect to the location of service delivery prior to planning provisions for the reception of service.

9.6 Service Support — Customer's Service Pole

When a 2400 V; 4160 V; 4800 V; and 7200 V service is to be provided, and a customer maintains an overhead distribution system, he/she may furnish and install a meter and service pole, in a location approved by the Company. Such pole shall be subject to local and state ordinances.

When a 12000 V; 16500 V; and 33000 V service is to be provided, and a customer maintains an overhead distribution system, the Company will furnish and install the metering pole, metering facilities, and one span of metered overhead service.

The customer shall furnish and install a main disconnecting means with overcurrent protection on their service pole or the next adjacent pole. Where a customer is served directly from a distribution circuit or an autotransformer, the main disconnect shall be a circuit breaker equipped with overcurrent and ground-relaying protection.

Where a customer is served by a dedicated two-winding power transformer, the main disconnect may be a circuit breaker or switch-and-fuse combination of a type and with current-carrying and interrupting capacities acceptable to the Company (see ESR–7).

Consult the Company regarding available fault duties and coordination of protection.

Figure 2–17: Busway Service Head Requirements for 3Ø, 4-Wire — Wye or Delta — 600 V Maximum

EUSERC No. 349

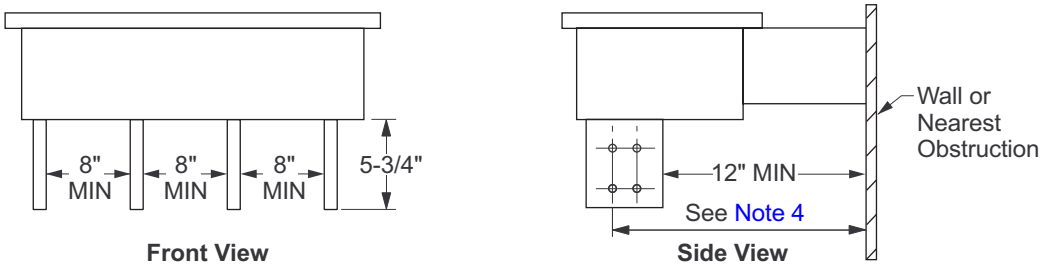

Terminating Facilities the Same Length (4-Wire Shown)
Exhibit A

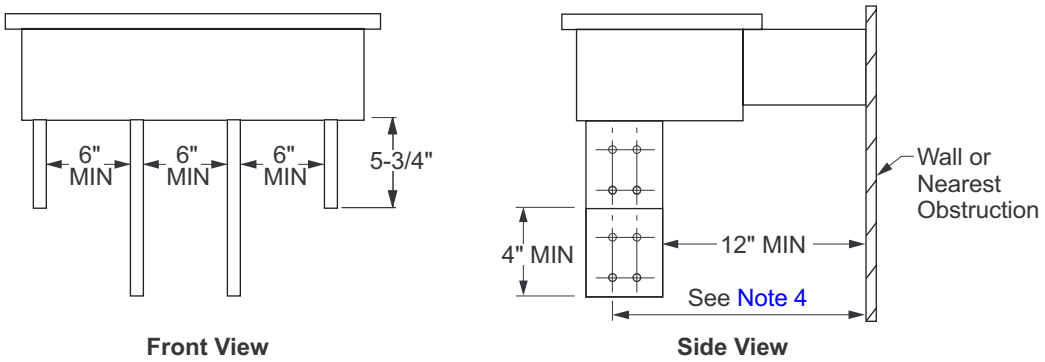

Terminating Facilities not the Same Length (4-Wire Shown)
Exhibit B

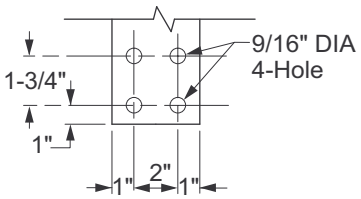

Exhibit C
Drilling Detail for Landing Terminals
(800 A Terminal Shown)
(See Notes 1, 2 and 3)

Note(s):

1. One terminal-landing position is required for each 400 A of service ampacity (or portion thereof). Each landing position shall consist of two 9/16-inch holes spaced on 1-3/4–inch vertical centers. When multiple landing positions are required, the horizontal spacing between landing positions shall be two inches (minimum).
2. Neutral terminal shall be permanently marked by the manufacturer.
3. For 120/240 V, three-phase, 4-wire services, the power leg (C Phase) terminal shall be permanently marked in an orange color by the manufacturer.
4. The maximum dimension from the building or nearest obstruction to the outermost landing position shall not exceed 25 inches unless approved by the Company.
5. Service heads with enclosed terminating positions are not permitted.
6. The clearances indicated between phases is for single-cable lug-mounting only, not multiple-cable stacking lugs.

ESR–3: Underground Service Connections 0–600 V

TABLE OF CONTENTS

SECTIONS AND SUBSECTIONS		PAGE
1.0	Underground Service Connections	3–5
2.0	Service Capacity (0–600 V)	3–5
2.1	Single-Phase Service — 120/208 V, 120/240 V, 240 V, and 240/480 V	3–5
2.2	Three-Phase Service — 120/208 V, 240 V, and 277/480 V	3–6
3.0	Service Capacity (600 V and above)	3–7
3.1	Single-Phase Services	3–7
3.2	Three-Phase Services	3–7
4.0	Service Specifications	3–7
4.1	Easement	3–8
4.2	Bill-of-Sale	3–8
4.3	Permits	3–8
5.0	Temporary Service Connections	3–8
6.0	Underground Service from an Overhead Source	3–9
6.1	Pole Riser Conduits	3–9
6.2	Service Termination Facilities	3–9
6.3	Service Conductors	3–9
7.0	Company-Owned Transformers Installed on Customer's Premises	3–9
8.0	Underground Service from an Underground Source	3–10
9.0	Single Point-of-Service Delivery per Building	3–10
10.0	Single Point-of-Service Delivery for each Premises	3–10
11.0	Factory-Built Modular Homes	3–11
12.0	Location of Point of Service	3–11
12.1	Low-Voltage Service (0–600 V)	3–11
12.2	Service (above 600 V)	3–11
13.0	Service Conduit Installations	3–12
13.1	Size and Number of Conduits	3–12
13.2	Depth of Conduit	3–12
13.3	Route of Conduit	3–12
13.4	Maximum Length of Conduit	3–12
13.5	Pulling Rope or Pulling Tape in Conduit	3–12
13.6	Bends in Conduit	3–12
13.7	Inspection of Conduit	3–13
14.0	Service Conduit Entry into Building Served	3–13
14.1	Residential Buildings (0–600 V)	3–13

SECTIONS AND SUBSECTIONS **PAGE**

14.2	Commercial Buildings (0–600 V)	3–13
14.3	Services (2400–16500 V)	3–13
15.0	Terminating Enclosures	3–13
15.1	Type Required for Service (0–600 V)	3–13
15.2	Type Required for Service (above 600 V)	3–14
15.3	Subway-Type Terminating Enclosures	3–14
15.4	Subway-Type Terminating Pull Boxes	3–14
15.5	Wall-Mounted Type Terminating Pull Boxes and Switchboard Pull Sections	3–14
15.6	Access to and Working Space in Front of Termination Enclosures	3–15
15.7	Access	3–15
16.0	Electric Meter Rooms	
16.1	Doors	3–16
16.2	Foreign Equipment	3–17
16.3	Headroom	3–17
16.4	Illumination	3–17
16.5	Meter Clearances	3–17
16.6	Meter Marking	3–19
16.7	Room Identification	3–19
16.8	Vehicle Access	3–19
16.9	Meter Heights	3–19
16.10	Working Space — Metering and Service Equipment	3–19
16.11	Protective Barriers (Posts/Bollards) for Service Equipment	3–21

FIGURES **PAGE**

3–1	Meter Room Clearances	3–18
3–2	Working Space and Clearance Requirements 0–600 V (Three Views)	3–20
3–3	Protective Barrier for Service Equipment Installation Requirements	3–22
3–4	Typical Riser at Pole — Various Voltages	3–23
3–5	Customer Conduit Installation and Typical Concrete Conduit Encasement	3–24
3–6	Underground Combination Meter Panel 0–600 V	3–25
3–7	Meter Panel for Single-Family Residential Underground Service — 300/400 A (Class 320), 120/240 V, Single-Phase 3-Wire	3–26
3–8	Underground Service Terminating Facilities for Residential Multiple-Occupancy Service — 6 Meters, Single-Phase 3-Wire, 0–600 A, 0–600 V	3–27
3–9	Underground Pull Box Equipped with Cable Terminations for Commercial or Residential Use — 0–600 V — 0–1,200 A	3–28
3–10	Combination Disconnecting Device and Terminating Enclosure — 0–600 V — 1,200 A Maximum	3–30
3–11	Underground Pull Boxes	3–31
3–12	Typical Service Lateral Installation for Single-Family Residence	3–32
3–13	Typical Service Conversion from Overhead to Underground	3–33
3–14	Typical Plug-In Type Meter Adapter	3–34
3–15	Typical Plug-In Type Generation Meter Adapter	3–34
3–16	Plug–In Temporary (Piggyback) Service Adapter	3–35
3–17	Temporary Service from a Pad-Mounted Transformer	3–36
3–18	Temporary Service from Secondary Handhole, Pull Box, or Pedestal	3–37
3–19	Riser Bend for Multi–Family Residential Service Entrance and Recessed Service Applications	3–38
3–20	Service Entrance for Single-Family Dwelling Service	3–39
3–21	Exposed Service Conduit Installation	3–40
3–22	Riser Bend Installation at Wall or Pad	3–41
3–23	Handholes, Pull Boxes, and Manholes	3–42
3–24	Typical Mobile Home or Residential Service and Meter Post — Maximum 200 A — 120/240 V	3–43
3–25	Typical Underground Layout for Mobile Homes	3–45
3–26	Non-Residential Service Pedestals — 0–200 A — 0–600 V	3–46
3–27	Non-Residential, Unmetered Service Pedestal — 0–200 A — 0–240 V — Single-Phase — LS-2A, Street Lighting Systems Only	3–48
3–28	Non-Residential, Unmetered Service — 0–200 A — 0–240 V — Single-Phase — LS-2B, Street Lighting Systems Only	3–49

TABLES **PAGE**

3–1	Meter Room — Meter Clearances	3–18
3–2	Approved Riser Bend Materials and Sizes	3–23
3–3	Concrete Encasement Requirements	3–24
3–4	Edison-Approved Service Conduit Material	3–24
3–5	Minimum Pull Box Dimensions	3–29
3–6	Handhole, Pull Box, and Manhole Applications and Sizes	3–42
3–7	Terminating Pull Section Minimum Dimensions	3–46
3–8	LS-2B Streetlight Design Requirements	3–49

ESR–3: Underground Service Connections 0–600 V

1.0 Underground Service Connections

Overhead service will not be supplied to any building or premises in an area designated as an underground location. In areas where both overhead and underground service facilities exist, the Company shall be consulted for determination of the type of service that will be supplied.

2.0 Service Capacity (0–600 V)

The capacity supplied by one service will be governed by the following specifications:

2.1 Single-Phase Service — 120/208 V, 120/240 V, 240 V, and 240/480 V

The maximum rating of an individual meter switch for 120/208 V, three-wire service is 200 A. Normally for 120/240 V or 240 V service, the maximum meter switch rating is 400 A and 200 A for 240/480 V services. Under certain operating conditions, permission may be granted for installation of 600 A service equipment for an individual 120/240 V or 240 V load. Otherwise two or more separate 400 A service installations may be required, and totalized metering will be available. Consult the local Service Planning Office for requirements.

On multiple-occupancy buildings consult the local Service Planning Office for load requirements. See Section 9.0 and Section 10.0 for group metering requirements.

Single-phase 240 V, two-wire load may in some cases be supplied from a three-phase source by a three-phase service and balanced across the three phases. Consult the local Service Planning Office for details.

2.2 Three-Phase Service — 120/208 V, 240 V, and 277/480 V

Normally, for a given voltage or phase, only one set of service conductors with one meter switch which carries a customer's entire load will be permitted to a single occupancy. In all cases, the Company shall be consulted relative to available voltage and method of service delivery prior to making the service installation. The maximum main switch capacity allowed for 240 V or 277/480 V three-phase is 4000 A of connected load. Per Rule 2 B.5.a, the maximum demand allowed for 277/480 V is 3,000 kVA (3,600A). When capacities exceeding 4000 A are required, two or more services may be installed with totalized metering (see ESR–6). Per Rule 2 B.5.c, the maximum demand allowed on a 120/208 V service is 1,000 kVA (2,776 amps). For reference, a 100% rated 3,000 amp panel is maxed out at the equivalent of 1,080 kVA (Assumed load factor of 77%, for multi-family, allows for transformer load limit rating of 120% of nameplate on 1,000 kVA transformer or 1,200 kVA / 3,334 amps). Therefore, no more than a single 3,000 amp panel or combination of 3,300 amps of total panels should be connected to a single transformer structure at 120/208 V 3P. If the customer foresees the potential to exceed 1,200 kVA of demand, they will need to upgrade their design to 277/480 V to maintain a single point of service. Otherwise, they should plan for a second 120/208 V panel location for totalized metering.

Three-phase service will only be supplied to a residence if a three-phase voltage is available at the location or there is one motor of more than 10 hp.

Three-phase, 240 V service shall be available to customers who qualify from Company-owned transformers located on the customer's premises, when in the opinion of the Company, such space is considered necessary.

Service may be supplied at 120/208 V wye provided: (1) the Company maintains a four-wire, 120/208 V wye system, or (2) the customer's load would require an individual transformer installation of not less than 15 kVA, and (3) the transformer installation is located on the customer's premises, when in the opinion of the Company such space is considered necessary.

In the Long Beach 120/208 V network area, connected loads in excess of 300 kVA will normally be served from Company-owned transformers located on the customer's premises. Consult the local Service Planning Office for details.

Service may be supplied at 120/240 V, three-phase, 4-wire delta provided:

1. The Company maintains a four-wire delta secondary system
2. The installation requires not less than 15 kVA of transformer capacity
3. The unbalance between phases is less than 100 kW
4. The service transformers are located on the customer's premises, when in the opinion of the Company such space is necessary.

All 277/480 V services shall be available only to customers who qualify and Company-owned transformers are located on the customer's premises, when in the opinion of the Company such space is considered necessary.

3.0 Service Capacity (600 V and above)

Consult the local Service Planning Office with respect to special requirements prior to planning any high-voltage service installations.

A set of service cables may consist of a single run or more than one operating in parallel, with each run in a separate conduit. The maximum demand load which will be supplied by a single run is 400 A.

3.1 Single-Phase Services

Normally, the maximum permissible single-phase load proposed to be directly connected to any one phase of the Company's system is as follows:

- Single-phase service at 2,400 V—150 kVA
- Single-phase service at 12000 V or 16500 V—1000 kVA

These values may be increased where special facilities are installed by the Company.

3.2 Three-Phase Services

The maximum main switch capacity for a 2400 V or 4160 V, three-phase service is 3000 A. When service capacity exceeding 3000 A is required, two or more services may be installed with totalized metering. For higher voltage services, consult the local Service Planning Office.

4.0 Service Specifications

Company approval is required for specifications of installations involving any underground structures other than service conduits and pull boxes. Such specification must comply with all applicable codes, laws, ordinances, and similar regulations.

Company approval is required in advance of construction for the locations and types of structures installed for Company use.

In certain cases, Company inspection will be required during installation of structures for Company use. Consult the local Service Planning Office to ascertain if inspection is required. Notice must be given 48 hours prior to construction to obtain this inspection. These inspections may not negate requirements of the local building and safety departments for inspection of the facilities being installed.

All installations on the customer's premises are made by the customer. Installations of service conduit and its appurtenant structures for service from an overhead line source, both on and off the customer's premises, are made by the customer, under the conditions specified for Section 6.0.

All grounding materials shall be furnished and installed by the customer. Contact the local Service Planning Office for requirements on specific installations.

When service conduits are encased in two inches or more of concrete, or under two inches or more of concrete floor, they are considered to be outside of the building by the National Electrical Code (NEC) (see Subsection 6.3, Section 8.0, and Subsection 15.5).

4.1 Easement

Where a customer's service conduit passes through property other than the premises being served, the Company shall obtain an easement for the service conduit from the owner of such property. In the event the Company is unable to do so, it shall become the responsibility of the customer to negotiate the easement.

In certain cases, where in the opinion of the Company the circumstances warrant, the customer may be required to furnish an easement to the Company for the service conduit and its appurtenances. This requirement will particularly apply where two or more premises are supplied by branch service conduits from a pull box at the end of or in the run of a main service conduit. In such cases, the Company will require an easement from each property owner over whose premises any such conduit passes to supply other premises.

4.2 Bill-of-Sale

In cases where two or more premises are supplied by a single main service conduit and its appurtenant pull boxes, and in certain other cases where, in the opinion of the Company, the circumstances warrant, a bill-of-sale conveying ownership of conduits and their appurtenances to the Company will be required.

4.3 Permits

Where any governing authority requires the issuance of a permit for an underground service installation on the premises of the customer or on other private property, the customer shall obtain such permit(s). In cases where the service is supplied from an overhead source and any part of the installation is located on a public way, the customer will normally obtain any required permit(s). Where a permit for the portion on the public way is not available to the customer, the Company will construct that portion only. The Company will bill the customer for the cost of construction, the permit fee(s), and any inspection required by the permit.

5.0 Temporary Service Connections

A service connection for temporary use during construction may be made from an underground source, provided the customer installs the necessary structures and facilities, and makes a sufficient deposit to cover all costs of those portions which do not become a part of the permanent service. To keep the temporary installation and removal cost to a minimum, the facilities for the permanent service should be completed to the fullest extent practicable (see Figure 3–16 and Figure 3–17).

A temporary conduit may be installed from a permanent pull box at the end of or in the run of the permanent service conduit. This conduit may connect to suitable temporary metering equipment with conductors installed by the customer. See Figure 3–18 for temporary underground service connections.

The customer shall pay required fees and make applications for all temporary service connections.

6.0 Underground Service from an Overhead Source

Any customer desiring the service conductors underground for low- or high-voltage (0–33,000 V), including conductors supplying Company-owned transformers in a vault or enclosure, shall furnish, install, and maintain at their expense, conduit, or conduit as specified by these requirements. The Company will determine the size of the conduit and number of runs to be installed in each case.

6.1 Pole Riser Conduits

Pole-riser conduit(s) and necessary miscellaneous material and fittings shall be furnished and installed on the pole as follows:

1. The Company will furnish all materials and charge the customer the cost thereof.
2. The Company will erect, own, and maintain all materials on the pole at its expense.

See Figure 3–4 of these requirements for minimum conduit size, application, and installation practices.

6.2 Service Termination Facilities

The customer shall furnish, install, and maintain at their expense, facilities for the termination of the service conduit at the load end, together with any intermediate pull boxes or other equipment designated by these requirements. Where Company-owned transformers are to be installed in a vault or enclosure on the customer's premises, the service conduit will terminate in the transformer vault or enclosure. In all other cases, a terminating enclosure will be installed. All material and equipment required to be furnished and installed by the customer, under the terms of this paragraph, shall comply with the detailed requirements hereinafter specified and shall permanently be maintained in good order by the customer.

6.3 Service Conductors

In all cases, the Company will determine the size, type, and number of runs of service conductors from the Company's lines to the terminating enclosure.

The Company will furnish and install the service conductors together with terminations on the pole and any necessary miscellaneous materials required.

All service conductors, terminations, and miscellaneous material installed by the Company will be owned and maintained by the Company after their installation.

When the customer's terminating enclosure is within the building, the customer shall install, own, and maintain a conduit system encased in or under a minimum of two inches of concrete. These conduits are considered to be outside of the building per the NEC.

7.0 Company-Owned Transformers Installed on Customer's Premises

Where SCE installs transformers and related service equipment on the Applicant's premises, the Applicant shall furnish, as required, without cost to SCE, an easement providing adequate space for SCE's lines and transformer and equipment installation, together with their necessary appurtenances. Easements and space provisions shall be such that required clearances will be maintained between SCE's facilities and adjacent structures. This shall include adequate provisions for ingress and egress from these facilities by SCE employees. The Applicant shall provide truck access, or other approved means for the installation and replacement of such

facilities. Any room or enclosure provided by the Applicant shall conform with all applicable laws, ordinances, or requirements of the local inspection jurisdiction, and shall meet with the approval of SCE.

SCE's standard installations for SCE's transformers and related equipment located on the Applicant's premises or private property are as follows:

- Outdoor pad or slab box
- An approved outdoor-walled or fenced-enclosure
- An approved transformer room located inside a building
- Pole-type structure
- Single SCE-owned customer substation

For further details, see ESR–4.

8.0 Underground Service from an Underground Source

For underground service, the local Service Planning Office shall be consulted for extension rules and specifications.

When the customer's terminating enclosure is within the building, the customer shall install, own, and maintain a conduit system encased in or under a minimum of two inches of concrete. These conduits are considered to be outside of the building per the NEC.

Where the Company-owned transformers are installed on the customer's premises, the service conduit will terminate in the pad-mounted structure, a transformer room, pull box, or enclosure.

The customer shall furnish and install, at their expense, a conventional service conduit system from the Company's distribution system to their terminating facilities. This will include all intermediate pull boxes or other equipment as required to deliver service.

The Company will furnish, install, own, and maintain the service cables as provided for in Rule 16.

9.0 Single Point-of-Service Delivery per Building

For all single- and three-phase service installations where the individual meter switches are rated 200 A or less, only one point of service will be established. This includes single- or multiple-occupancy buildings (including condominiums in common tenancy and townhouses developed with common area)[1/], unless otherwise determined by reason of Company operating necessity. All terminating enclosures for service to each of the types, phase, and voltage classes of load to be served shall be grouped at this location. Consult the local Service Planning Office for requirements.

Where Company-owned transformers are to be installed on the customer's premises, see ESR–4 for requirements.

10.0 Single Point-of-Service Delivery for each Premises

One point-of-service delivery will normally be established for one enterprise on lots or continuous premises on which one or more buildings are to be served.[2/] All terminating enclosures for service to each of the types, phase, and voltage classes of load to be served shall be grouped at this location.

[1/] For townhouse developments where common-owned property is not available, individual services may be provided to each unit.

[2/] Multiple-occupancy buildings will be served by one point-of-service delivery unless otherwise determined by reason of Company operating necessity. See ESR–2 for meter locations.

In cases where single premises are abnormally extensive in area, the Company shall be consulted with respect to the method by which service will be supplied.

11.0 Factory-Built Modular Homes

Service to factory-built modular homes shall be provided in accordance with the requirements for residential occupancies (traditional framing methods) constructed on site. The point-of-service delivery shall be designated by the Company in advance and service equipment shall be located accordingly. Where service equipment is installed at a location unacceptable to the Company, the point-of-service delivery shall be in a terminating pull box furnished and installed by the customer in accordance with Company requirements. When service equipment is improperly located due to the Company not being contacted prior to installation, the customer is responsible for all modifications. Consult the local Service Planning Office for details.

12.0 Location of Point of Service

The location of each point-of-service delivery must be approved by the Company in advance of construction. The following requirements will apply:

12.1 Low-Voltage Service (0–600 V)

Where the Company installs underground service cable from its overhead or underground system to a point-of-service delivery on or in a building or structure, the point-of-service delivery shall be at or immediately adjacent to the building wall nearest and facing (1) the point at which the service conduit enters the premises or (2) the pole from which the service originates; and shall be as near as practicable to the corner of such wall which is accessible with a minimum length of service conduit. For meter locations, see ESR–5. The point-of-service delivery may be in a subway-type pull box between the building served and the Company's lines, provided it is in a permanently accessible location approved by the Company. All terminating enclosures shall be located as specified in Section 15.0.

Where the Company installs service cables to a point-of-service delivery at which the terminating enclosure is a subway-type pull box, manhole, or the pulling section of a switchboard, the terminating location shall be approved by the Company.

Where the customer takes service from a point-of-service delivery in a transformer vault or enclosure on the customer's premises containing Company-owned transformers, the Company will designate the manner in which the customer's service-entrance conductors are to be installed in the vault or enclosure.

12.2 Service (above 600 V)

The Company will install the service cable for all high-voltage services in accordance with the applicable provisions of its rules (see Subsection 6.3).

All points-of-service delivery shall be in a location approved by the Company either inside or outside of a building.

The service terminating enclosures shall be located in accordance with the detailed requirements for such locations (see Section 15.0).

Services above 600 V will be treated individually as special cases. Consult the local Service Planning Office for details.

13.0 Service Conduit Installations

The customer shall install all service conduit intended for the installation of Company service cables in accordance with the following requirements:

13.1 Size and Number of Conduits

Due to the various sizes of service cables available, contact the local Service Planning Office for information relative to the minimum size and number of conduits acceptable to the Company. See Table 3–4 for the acceptable types of conduits.

13.2 Depth of Conduit

A minimum cover is required over all service conduit installations. This cover is measured from the outside of the conduit to the finished surface grade and varies both with location and service voltage.

Where a conduit is stubbed out to curb or property line to be picked up later, it must terminate on a level course with sufficient depth to cross the gutter with the cover required for the service voltage application.

The minimum conduit cover for applications up to 35 kV and streetlights (all voltages) shall be 30 inches for both commercial and residential supply cable types. These values are Company nominal minimum cover values. They must be increased accordingly where necessary to comply with applicable codes and ordinances and to meet joint construction requirements with other utilities. See Table 3–3 for encasement schedules.

13.3 Route of Conduit

The entire route of the conduit installation for Company use must meet with Company approval.

13.4 Maximum Length of Conduit

The maximum allowable length of conduit between pull boxes is determined by the type and size of cables, the conduit size and the number of bends in the run. The number of bends along the conduit route should be kept to a minimum to facilitate pulling of cable and to minimize the need for pulling structures. Consult the local Service Planning Office for information on specific installations.

13.5 Pulling Rope or Pulling Tape in Conduit

Each conduit installed for Company use shall be provided with a pulling rope or pulling tape. Pulling ropes shall have a minimum diameter of 3/8 inch and a minimum average tensile strength of 3,000 pounds. A tracer color (one or more yarns in a single strand) may be included to identify the manufacturer. Where the conduit is stubbed out to be picked up later, the pull rope or pull tape must be secured outside the stub end of the conduit per UGS, CD 148, Note 5. Where the conduit is joined with an existing conduit, the new conduit should be mandreled and a new continuous pull rope should be installed. Pull tape will not be used for 4-inch or larger conduit sizes. Contact the local Service Planning Office if no pulling rope can be found in the existing conduit.

13.6 Bends in Conduit

See Figure 3–4 for the minimum permissible radius of various types of riser bends in service conduits.

13.7 Inspection of Conduit

All conduit installed for Company use shall be mandreled with a Company-approved mandrel to ensure that it is clean and free of obstructions.

Service conduit installations which will remain under customer ownership must meet the requirements of the Company and the local code enforcement agency having jurisdiction. Service conduit installations require Company inspection prior to backfilling. Contact the local Service Planning Office at least 48 hours in advance of inspection. Any installation backfilled without benefit of this inspection will be subject to re-excavation at the customer's expense.

14.0 Service Conduit Entry into Building Served

14.1 Residential Buildings (0–600 V)

The service conduit shall not pass under or into the building being served, except at a distance sufficient to permit its entrance into the bottom of a terminating enclosure recess into an outer wall (see Figure 3–19).

14.2 Commercial Buildings (0–600 V)

The service conduit should only pass under or into the building served for the shortest practicable distance necessary to reach a terminating enclosure located in accordance with Subsection 15.5.

14.3 Services (2400–16500 V)

The service conduit may extend into the building served to a location approved by the Company for the location of the terminating enclosure.

15.0 Terminating Enclosures

Every service-terminating enclosure shall be in a permanently accessible location which is acceptable to the Company.

Whenever a terminating enclosure is within a single-occupancy building and such building is divided into a multiple occupancy, all sets of service-entrance conductors shall be brought to a single-terminating enclosure located as required for multiple-occupancy buildings (see ESR–5).

15.1 Type Required for Service (0–600 V)

A terminating enclosure shall be provided for all underground services. Terminating enclosures shall be subway-type as shown in Table 3–5, wall-mounted pull boxes as shown in Figure 3–9, Figure 3–10 and Figure 3–11 or switchboard pull sections as shown in ESR–6 and ESR–6, Figure 6–7. Where required, terminating lugs for Company service cables will be furnished and installed by the Company.

Safety socket boxes as shown in ESR–5, meter post and pedestals as shown in Figure 3–24 and Figure 3–26, and instrument transformer cabinets as shown in ESR–5, are also acceptable terminating enclosures as permitted in these requirements.

Individually metered single-family occupancies up to 400 A shall use combination meter panels with termination sections as shown in Figure 3–6 and Figure 3–7.

15.2 Type Required for Service (above 600 V)

All services above 600 V require special terminating enclosures. See ESR–7, or contact the local Service Planning Office for additional information.

15.3 Subway-Type Terminating Enclosures

The service-entrance conduit and conductors from a subway-type terminating box shall be furnished and installed by the customer.

Where an outdoor concrete subway-type pull box is used as a terminating enclosure, or the supply end of the customer's service-entrance conduit originates in an outdoor transformer enclosure, the customer's service-entrance conductors will normally be required to pass through a terminating-type, wall-mounted pull box or a switchboard pull section. This will act as a water trap to prevent water or moisture from entering the termination enclosure or metering sections containing energized terminations or devices.

The Company will make the terminations in the termination enclosure between the Company's service cables and the customer's service-entrance conductors.

In cases where the standard size terminating enclosures/boxes are not suitable for a particular application, special enclosures of equal or larger size may be used where specifically approved by the Company.

15.4 Subway-Type Terminating Pull Boxes

Subway-type pull boxes for the termination of underground services shall be installed in the ground at a permanently accessible location outside of a building between the building and the Company's lines. Such boxes shall be installed with the cover flush with the finish grade. Consult the local Service Planning Office for details.

15.5 Wall-Mounted Type Terminating Pull Boxes and Switchboard Pull Sections

Wall-mounted service terminating pull boxes and switchboard pull sections shall be located on or recessed in an exterior wall of the building served, facing outward. The enclosure shall be permanently accessible without entering the building, shall not project into any driveway, walk, or public way and shall have access and working space in compliance with Subsection 15.6. The bottom of the wall-mounted enclosures shall not be less than 6 inches nor more than 5 feet above the standing and working surface.

Wall-mounted type pull boxes and switchboard pull sections may be installed inside a commercial or industrial occupancy at grade floor level or may be installed in a basement having a ceiling height of not less than seven feet. All such installations shall comply with access and working space requirements and shall meet with the approval of the Company.

Under the following conditions, and with permission of the local Service Planning Office, terminating enclosures may be located inside of a building.

The service conduit shall be encased in not less than two inches of concrete or under a concrete floor at least two inches thick.

The service conduit runs directly to the terminating enclosure, either in a straight line or in a bend of not less than a three-foot radius, and enters the enclosure at right angles to the top, back, or bottom.

There is permanent, unobstructed, 24-hour access for all equipment and material that may be required by the Company for future maintenance, repair, or upgrading of the service.

Access to and work space in front of the terminating enclosure shall be provided as outlined in Subsection 15.6.

Switchboard pull sections may be incorporated in outdoor switchgear in a location approved by the Company. The pull section shall not project into any public way and shall be located to provide clear access and working space.

Existing underground terminating pull box or switchboard pull section ampacity rating shall be equal to or greater than the ampacity rating of the total main switch capacity for which it is serving. The total demand load of downstream connected services shall not exceed the ampacity rating of the main switch or breaker capacity. Adding services that result in a total demand load exceeding the ampacity rating of the main switch or breaker is not acceptable. If a main circuit breaker or switch is not present, the total demand load of all the downstream connected services shall not exceed the ampacity rating of a terminating pull box or swtichboard pull section.

15.6 Access to and Working Space in Front of Termination Enclosures

All terminating enclosures shall be provided 24-hour accessibility for installation and maintenance of the Company's facilities. Access must be through walking space affording not less than seven feet in height and three feet in width and be acceptable to the Company.

A permanent, level standing-and-working surface shall be provided. It shall be clear and unobstructed, at least equal to the width and height of the terminating enclosure space and extending not less than three feet in front of all terminating enclosures and their housings. In no case shall the height of the clear space be less than 6'-6". The width shall not be less than three feet. Non-residential service pedestals 0–200 A, Figure 3–26, shall be located to allow three feet of clearance for terminating enclosure in rear. Consult the local Service Planning Office for details. Greater clearances are required for high-voltage installations.

An electric meter room is an illuminated room, located inside a building provided by the customer and approved by the Company as to the location of the electric service and metering equipment. The electric meter room may be used by the customer at their option, rather than placing metering equipment on the exterior of the building. A chain-link fence is not acceptable as a separating room wall. The following provisions shall apply:

15.7 Access

Access shall be through a door on the building exterior opening directly into the electric meter room that provides 24-hour access. This door should swing out of the room whenever possible. If the door swings into the room, it is to be located so it does not open into any service equipment or working space(s). When metering equipment is installed in a locked room, a lock-box (provided by the Company) shall be permanently secured to the outer surface of the access door or immediately adjacent to the room in a permanently accessible location. The customer shall provide a key for the meter room prior to delivery of service. This key is to be housed inside the lock-box for utility access.

When meter access problems result due to metering equipment being improperly located and the Company had not approved the location, the customer, at their expense, will be responsible for all modifications.

Due to different characteristics of a building design, the Company could restrict meter location options. An order of preference shall be used to evaluate and approve meter/metering equipment access. This order of preference is to provide direction for Planners and Design Service Representatives in determining meter/metering equipment location.

A. Metering facilities and related service equipment are preferred to be located on the exterior of buildings and or structures to provide immediate access.

B. If exterior locations become unavailable, then customers may install metering facilities inside a meter closet recessed within the exterior structure wall and accessible from the exterior.

C. The customer may install metering facilities inside a building or structure within an approved meter room. This meter room and location must be approved by the Company in advance of construction. The customer shall provide an access door on the building exterior which allows access directly into the meter room. A Company-provided lockbox will be provided to allow Company access directly into the meter room.

D. If an access door directly into the meter room is not provided, then immediate and non-hazardous access to the meter room shall be required through entrances and areas used during normal business hours. In addition, an exterior door in close proximity to the meter room location shall also be required for installation, replacement, and maintenance of utility service entrance cables and equipment. A local telephone number shall also be readily posted for emergency access during non-business hours to electrical service equipment located within a meter room without direct exterior door access.

In certain cases, the customer may be required by the NEC to provide two entrances into a meter room. This is a code issue between the customer and the local authority having jurisdiction.

E. An unobstructed, safe, and walkable exterior pathway shall be provided to the entrance of the meter room. Pathway shall be a minimum of 36 inches wide and 3-1/2 inches thick, and can be concrete, compacted gravel or crushed granite.

16.0 Electric Meter Rooms

If, at any time, the Company determines a meter access problem exists, or may exist (for example, fences, building additions, shrubbery, dogs, hazardous materials, and so forth) the customer, at their expense, shall relocate the metering facilities to a new location acceptable to the Company.

16.1 Doors

The entrance to an electric meter room shall be through a vertical doorway (roll-up doors are not acceptable), not less than 3 feet wide and 6'-6" high. The door should open out and have a door-stop mechanism to keep the door open. When designing a business with a drive-through, the electrical room doors shall **not** open out onto the business drive-through lane. Panic-bar hardware shall be used in all meter room locations to allow the door to be opened hands-free from the inside.

16.2 Foreign Equipment

The following equipment is not allowed in an electric meter room. Such equipment includes but is not limited to:

- Gas equipment, including piping
- Water heaters/boilers, including any piping under pressure
- Storage of any materials, liquids, and so forth
- Fire and security alarms, including alarm systems connected to the access door that will operate when entry is made to the electric meter room
- Dry or wet-filled batteries and battery charging equipment
- Irrigation and sprinkler controllers
- Standby emergency and Rule 21 generators

Exceptions

Sprinkler supply piping and heads[3/], when required in an electric meter room by the local fire department or building official, are acceptable. Requirements for placement and shielding of sprinkler heads will be determined by the local inspection authority.

Pipes not under pressure may be allowed in the meter room, but may not extend from the floor to the structural ceiling that is above the electrical equipment.

16.3 Headroom

Shall be through a vertical doorway not less than three feet wide and 6'-6" high. See Subsection 16.1.

16.4 Illumination

The light must be controlled by an on-and-off switch. Timers and motion detectors are not allowed to control the meter room lighting.

16.5 Meter Clearances

All meter installations must provide minimum clearances as shown in Figure 3–1.

[3/] Only the piping and heads required for the electric meter room are allowed in this room.

Figure 3–1: Meter Room Clearances

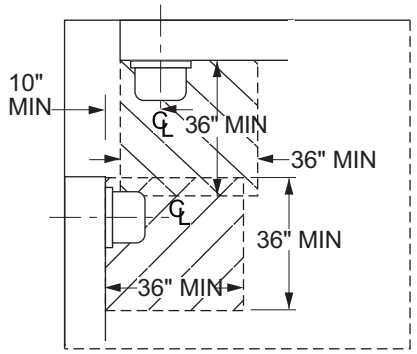

Exhibit A
Plan View

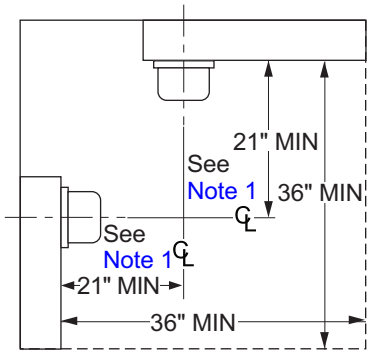

Exhibit B
Plan View

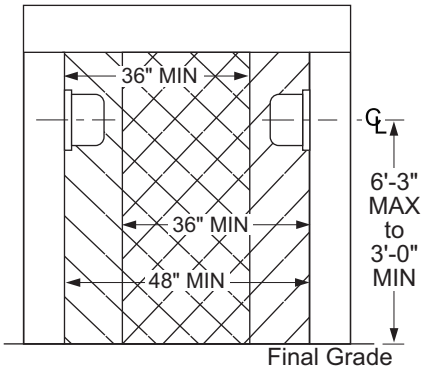

Exhibit C
Side View

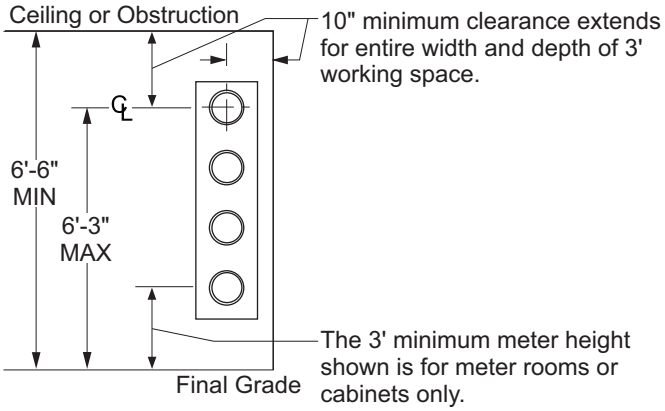

Exhibit D
Front View

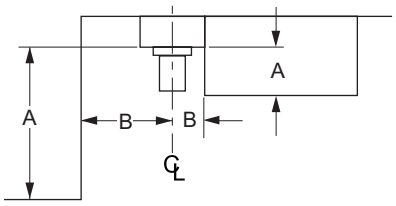

Exhibit E
Plan View

Table 3–1: Meter Room — Meter Clearances

A[a/]	B[b/]
0" to less than 2"	4–1/4"
2" to less than 11"	6–1/4"
11" or greater	10" MIN

[a/] A = depth of any obstruction extending beyond face of panel

[b/] B = clearance from ℄ of socket to side obstruction.

Note(s):

1. Dimension may be reduced to 17 inches if the socket on either side serves a residential occupancy.

16.6 Meter Marking

Each meter socket, meter panels, or switchboard(s) and their related meter/service disconnect shall be clearly and permanently marked[4/] by the contractor or customer to indicate the occupancy or load served. Multi Family units require a unit identification at each entry/door. Examples of permanent marking are: (1) an identification engraved placard secured by screws, rivets, or equivalent secure adhesive, and (2) commercially available decals. Identification means a street, apartment, or suite number. Label tape, felt pen, or foreign paint are not acceptable.

16.7 Room Identification

The electrical meter room must be permanently identified “Electric Meter Room,” “Meter Room,” or “Electric Room.”

16.8 Vehicle Access

Permanent vehicle access to the meter room is required for the installation and maintenance of service cables and metering equipment. Under some conditions, as determined by the Company, the vehicle access requirement may be waived. Consult the local Service Planning Office for details.

16.9 Meter Heights

When meters are located in a meter room or when fully enclosed in a closet the minimum height of the meter(s) may be three feet and the maximum height shall not exceed 6'-3". These heights are measured from the standing and working surface.

When meters are wall- or surface-mounted, but not located in a meter room or enclosure, the minimum height of the meter shall be four feet and the maximum height shall not exceed 6'-3". These heights are measured from the standing and working surface to the centerline of the meter.[5/]

16.10 Working Space — Metering and Service Equipment

Working space is required to permit access to the metering and service equipment and to provide working safety for personnel. A clear, level, and unobstructed working and standing space entirely on the property of the customer is to be provided in front of all meters and service equipment. Service equipment is defined as any termination enclosure, metering, and/or disconnect device and distribution equipment required to provide service.

The working space is to be kept clear level and unobstructed. It must be a minimum of three feet wide and extend a minimum of three feet from the face of any and all service equipment for services of 600 V or less. Consult the local authority having jurisdiction for higher voltage requirements.

For high voltage, see ESR–7.

The height clearance for the working space shall be no less than 6'-6" as measured from the clear, level, and unobstructed work surface to any overhead obstruction. The working space and clearance requirements in meter rooms for 0–600 V are illustrated in Figure 3–2.

4/ These requirements are for grouped meter service installations or where required for single-commercial installations only. They do not pertain to single-family dwellings.

5/ If the service equipment is installed on a housekeeping pad, then the standing and working area may have to be raised and extended outward in order to maintain the maximum meter height and proper safe working space.

Figure 3–2: Working Space and Clearance Requirements 0–600 V (Three Views)

Top View of Indoor Service Equipment

Working Space and Clearance requirements 0–600 V, see Note 5 for above 600 V

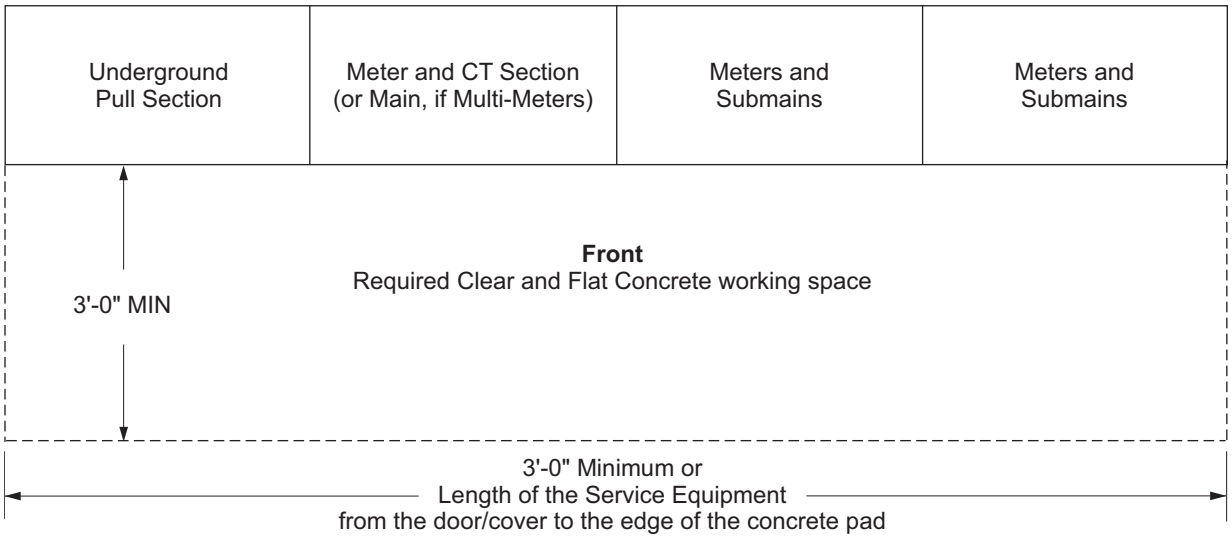

Top View of Outdoor Service Equipment (Type 3R Enclosure)

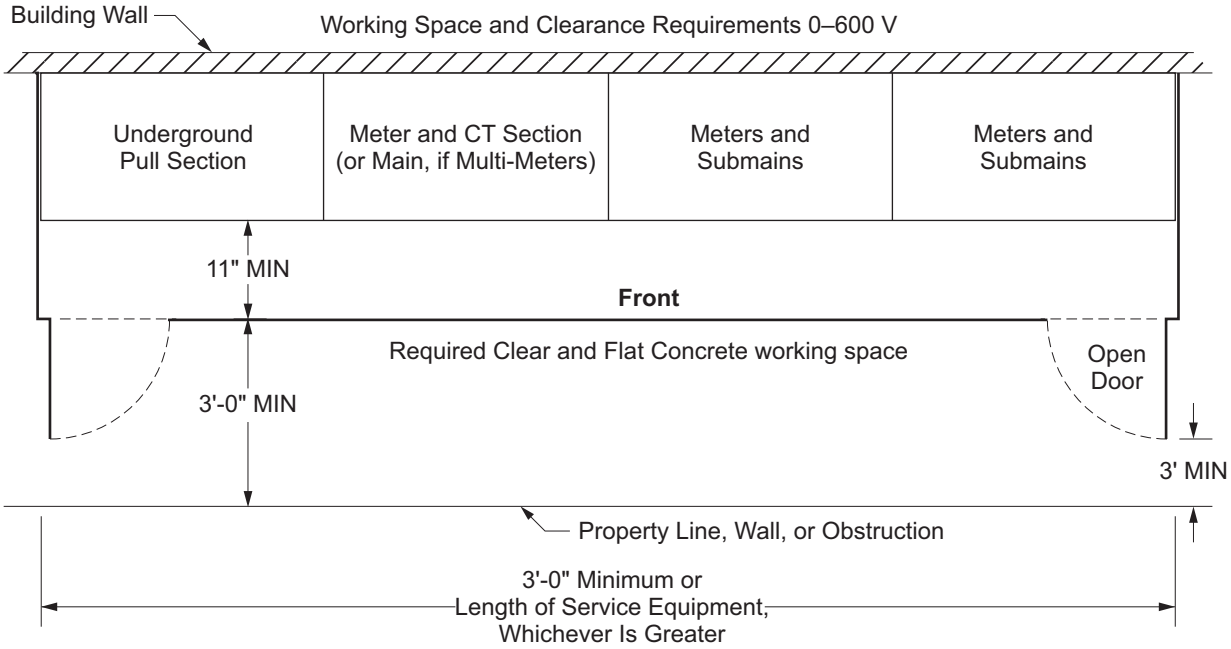

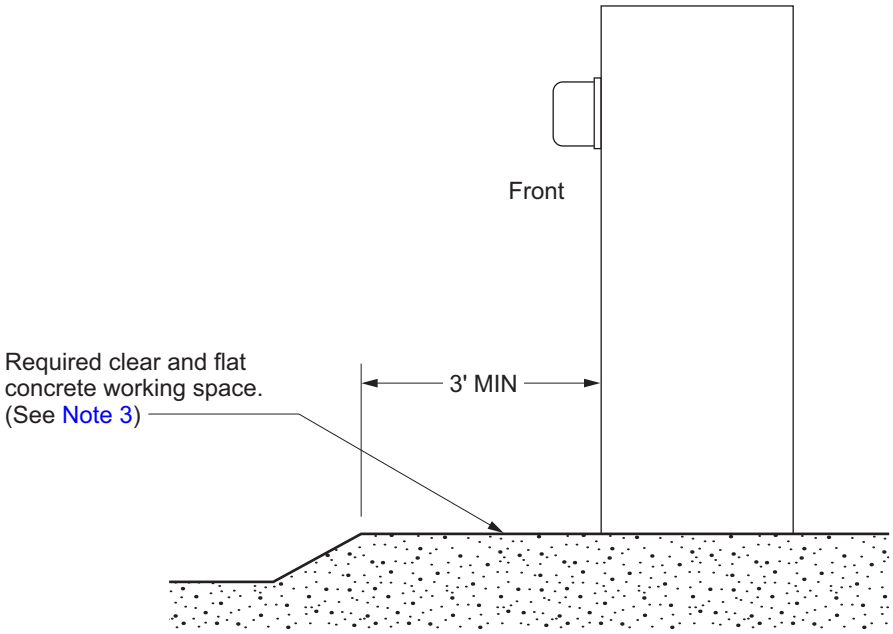

Side View

Note(s):

1. A minimum of 3 feet of clear, level concrete workspace is required in front of all termination, metering, and service equipment.
2. See ESR–5 for Meter-Mounting Height Requirements. Meter-mounting height will be measured from the standing and working space to the centerline of the meter(s).
3. When service equipment is installed on an elevated portion of the floor/ground, or housekeeping pad, the pad shall be flush with the bottom of the service equipment and extend a minimum of three feet. This is measured from the front of the service equipment or the outer door(s) of the switchboard NEMA 3R enclosure when installed. In no case shall the maximum meter height of 6'-3" be exceeded.
4. To maintain a safe, clear, and level concrete working area in front of new or existing meter and service equipment, a concrete slab, acceptable to the Company, must be used.
5. For switchboards above 600 V, five-foot minimum of clear and level concrete standing and working space is required in the front, rear, and side of any section where such part supports or provides access to metering, testing equipment, or service cable termination sections.

16.11 Protective Barriers (Posts/Bollards) for Service Equipment

Barrier posts/bollards are used to protect the meter and service equipment, as well as personnel, from vehicular contact, and to prohibit encroachment into the working space (for example, loading zones, driveways, congested areas, off street parking, and so on).

The customer shall provide and install “non-removable” barriers (posts/bollards) to provide the proper safe working clearances where the workspace is exposed to vehicular or other hazardous conditions. Meters will not be set until the barriers have been installed. Meter cabinet doors must open a minimum of 90 degrees and not conflict with barrier posts. A minimum clearance of 3-feet is required from the face of the switch gear to the Bollard/Post.

Figure 3–3: Protective Barrier for Service Equipment Installation Requirements

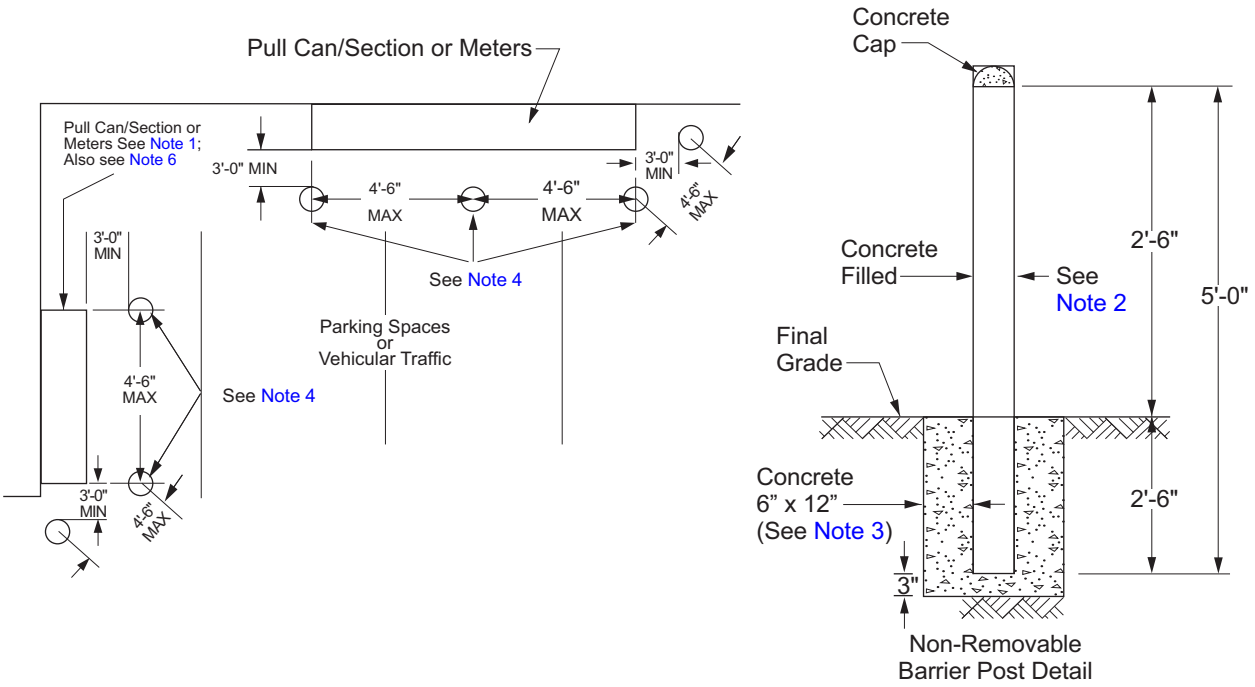

Note(s):

1. Meters located on a wall adjacent to any parking area, or area accessible to vehicular traffic, shall be protected by non-removable barriers. Wheel stops and removable barriers are not acceptable substitutes. Maintain a minimum of three feet of clear and level working space in front of all the service equipment enclosures. Barriers must be so positioned as to allow all service equipment doors/panels to be opened 90 degrees.
2. Use four-inch galvanized steel pipe (1/4-inch minimum wall) filled with concrete and paint "Caution Yellow."
3. The concrete encasement shall be a minimum of six inches thick in stable soil and 12 inches thick in sandy or unstable soil.
4. Barriers must be installed in line with each end of the service equipment to prevent vehicle contact. The distance between the center of the barriers shall not exceed 4'-6".
5. When applicable, a clearance of 3 feet shall be maintained from the back of all "non-door" sides of equipment as per UGS MC 830.
6. Before excavating for the barriers, call DIG ALERT at 811 for mark-out service. Call at least 48 hours prior to excavating.
7. See Figure 3–2.

Figure 3–4: Typical Riser at Pole — Various Voltages

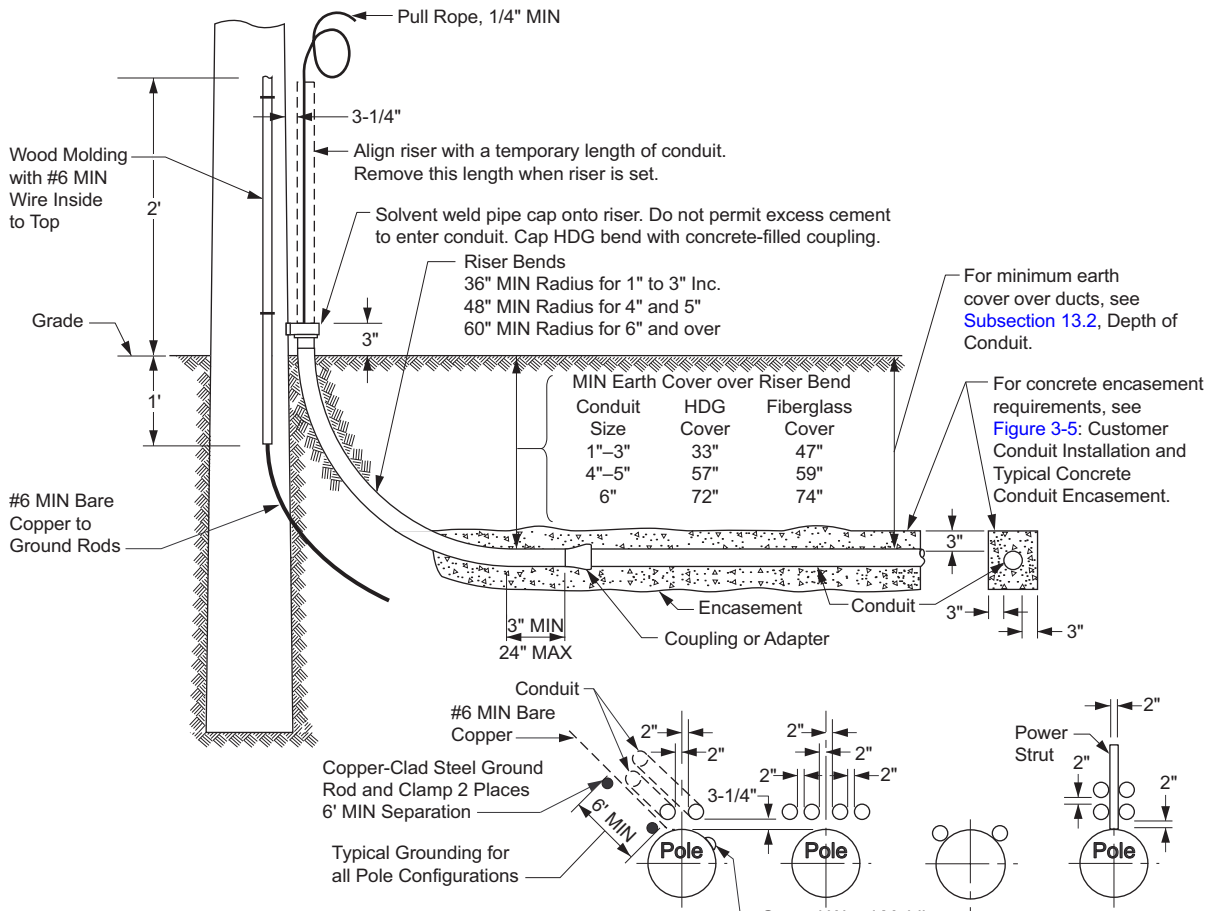

Note(s):

1. Approved riser bend materials and sizes are shown in Table 3–2.

Table 3–2: Approved Riser Bend Materials and Sizes

Material[a/]	Size (in)							
	1	**1-1/2**	**2**	**2-1/2**	**3**	**4**	**5**	**6**
Fiberglass	NA	NA	NA	NA	3	3	3	3
HDG	3	3	3	3	3	3	3	3

NA = Not Approved
3 = Approved

[a/] Schedule 80 PVC bends may be substituted for fiberglass bends for straight runs of 150 feet or less in conduit sizes four inches and under.

2. The Company shall designate pole and quadrant locations of riser conduits.
3. Schedule 80 PVC shall be 2-1/2 inches minimum diameter extending to 8 feet above ground level. Above eight foot, Schedule 40 PVC with two inches minimum diameter may be used. PVC shall not be placed in the climbing space. When HDG is used, it shall be grounded unless ten feet or more is buried in the ground. All grounding materials shall be furnished and installed by the contractor. Consult the local Service Planning Office for details.
4. Prior to backfilling, contact the local Service Planning Office 48 hours prior to backfilling for an inspection.

Figure 3–5: Customer Conduit Installation and Typical Concrete Conduit Encasement

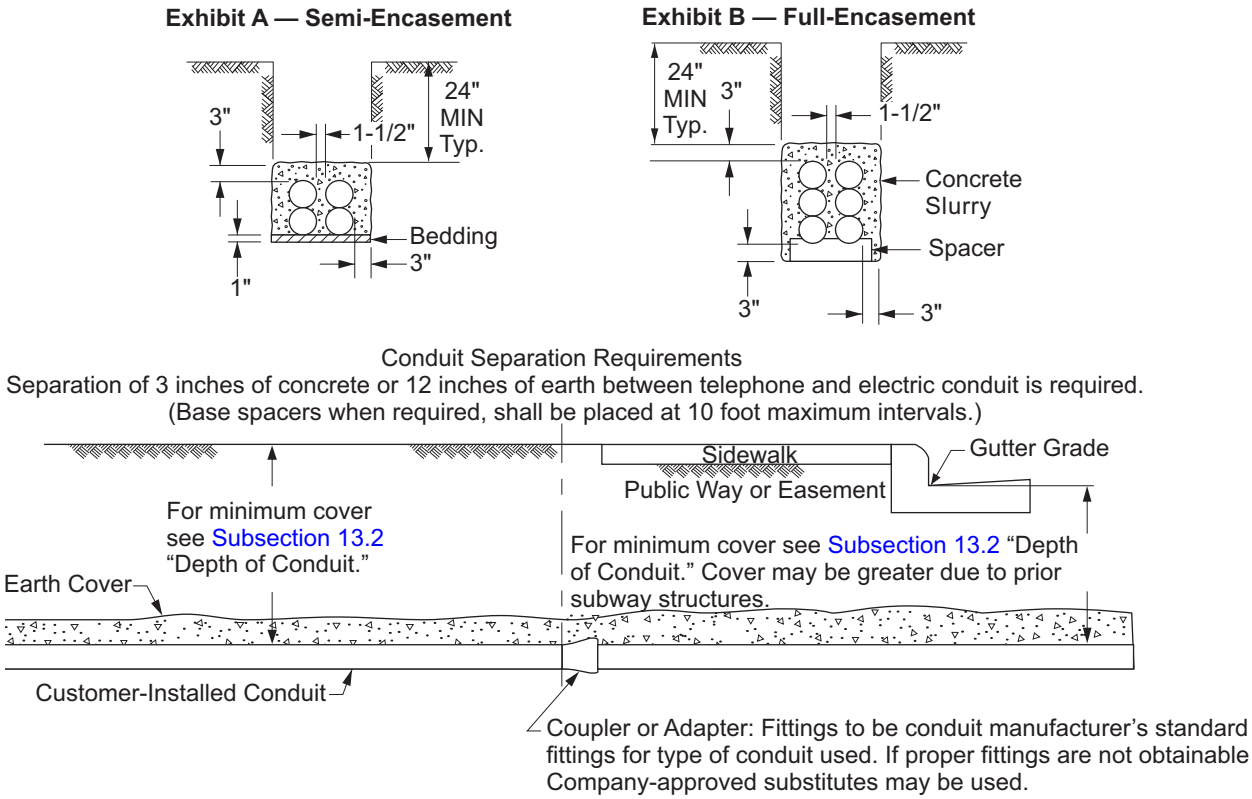

Table 3–3: Concrete Encasement Requirements

Conduit/Cable	Encasement[a/]	
	Semi	Full
Galvanized steel conduit	None Required	
1 or 2 direct burial-type conduits	None Required	
3 or 4 conduits in a bank (See Exhibit A, Figure 3–5.)	X	
More than 4 conduits in a bank (See Exhibit B, Figure 3–5.)		X

[a/] Contact the local Service Planning Office for encasement material specifications.

Table 3–4: Edison-Approved Service Conduit Material

Material[a/]
Hot dipped galvanized steel (HDG)—Includes intermediate metal conduit (IMC).
Rigid plastic polyvinyl chloride (PVC)—Sch. 40 (MIN) Edison-approved or UL Listed
Semi-rigid plastic — Direct Buried (DB) material–60, DB–100.
For DB installations, DB–60 conduit may be used for all sizes smaller than 4"; DB–100 conduit is required when 4", 5", or 6" conduit is installed.

[a/] Subject to approval by local inspection authorities.

Figure 3–6: Underground Combination Meter Panel 0–600 V

EUSERC No. 301

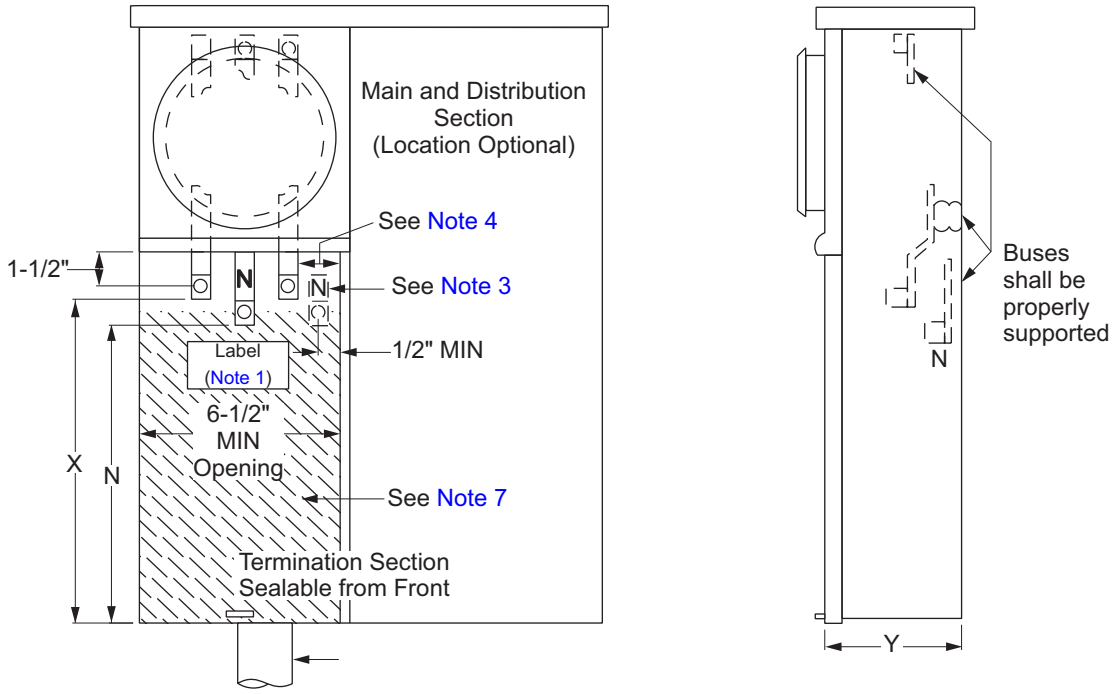

MAX Ampacity (Amp)	X MIN DIM	N MIN DIM	Y MIN DIM	Conduit Range
125	8"	6"	4"	1-1/4" to 2-1/2"
225	11"	8-1/2"	5"	1-1/2" to 3"

Note(s):

1. This equipment may be constructed for overhead or underground, or for combination overhead-underground service applications. When constructed as an OH/UG device, a yellow warning label (2" × 3" minimum) shall be installed below the terminations in the pull section, reading “WARNING: BUS ENERGIZED AT ALL TIMES.”
2. Terminations for service conductors shall be aluminum-bodied pressure type lugs with a range of #6 through 1/0 AWG for the 125 A device and 1/0 AWG through 250 kcmil for the 225 A device.
3. Provide a bonding screw or jumper if the neutral terminal is insulated from the enclosure.
4. A minimum radial clearance of 1-1/2" shall be provided between hot bus terminals and ground or neutral surfaces.
5. The clearance from the hot bus to back of enclosure may be reduced to 1".
6. See Figure 3–20 for minimum conduit size and installation requirements.
7. A reducing bushing may be used when a larger conduit is required due to pulling distance or bends.
8. The shaded area of the termination section is for Company-service lateral conductors only.
9. Ringless-type meter sockets are not acceptable.

Figure 3–7: Meter Panel for Single-Family Residential Underground Service — 300/400 A (Class 320), 120/240 V, Single-Phase 3-Wire

EUSERC No. 302A

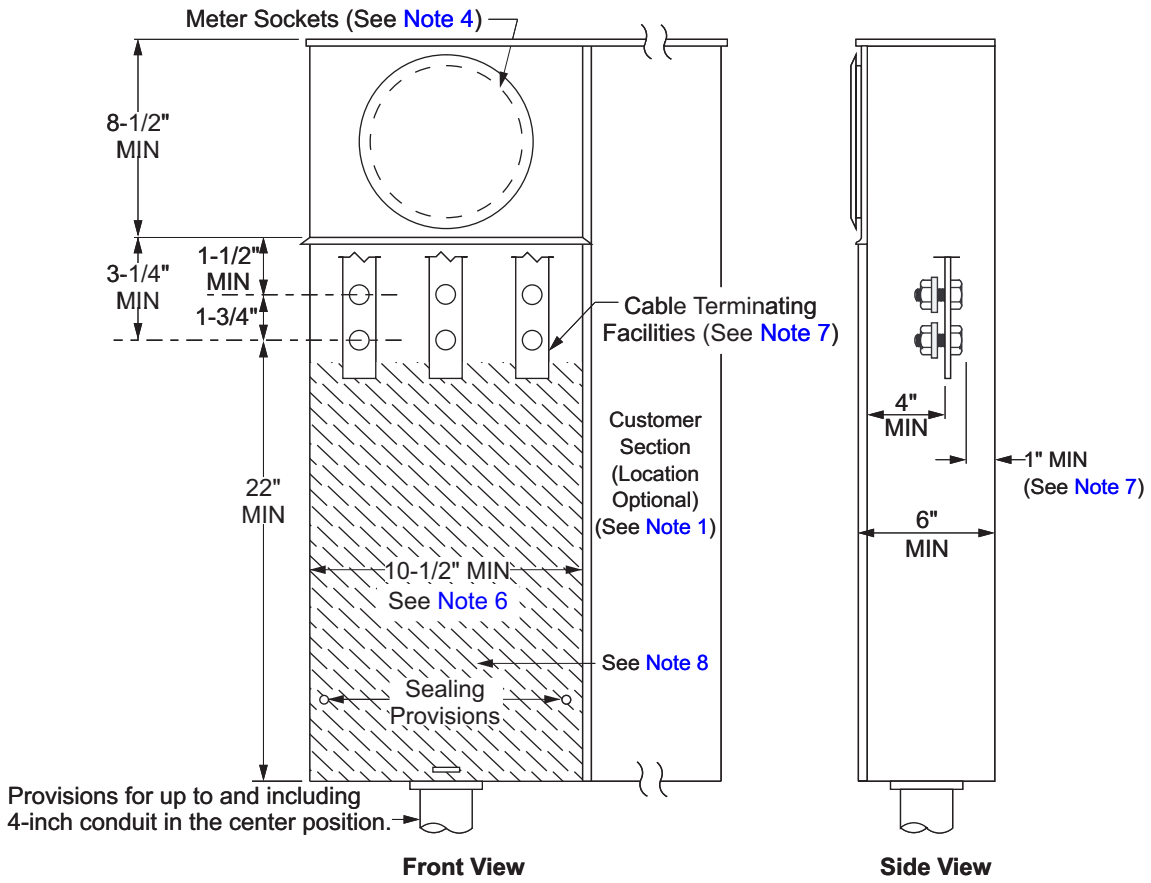

Note(s):

1. The panel shown is a combination device having both a utility section (that is, termination section and metering section), and a customer section, but may also be constructed without an attached customer section.
2. The panel shall be marked with either a rating of “320 A continuous” or “400 A maximum (320 A continuous).”
3. Only ring-type sockets are acceptable. Ring-type socket meter panels shall be provided with a sealing ring and the meter socket shall be rigidly mounted on a support and attached to the meter panel.
4. The meter socket may be located above, to the left, or to the right, of the terminating pull section.
5. Termination section cover panels shall be removable, sealable, provided with two lifting handles, and limited to a maximum size of nine-square feet in area.
6. The access opening dimension shown (10-1/2 inches) is measured between the return flanges.
7. Cable terminating facilities shall consist of single-position studs with clearance and access requirements complying with Figure 3–9.
   Exception: The neutral clearance to the back wall of the enclosure may be reduced.
8. The shaded area of the termination section is for Company-service lateral conductors only.
9. Ringless-type meter sockets are not acceptable.

Figure 3–8: Underground Service Terminating Facilities for Residential Multiple-Occupancy Service — 6 Meters, Single-Phase 3-Wire, 0–600 A, 0–600 V

EUSERC No. 342

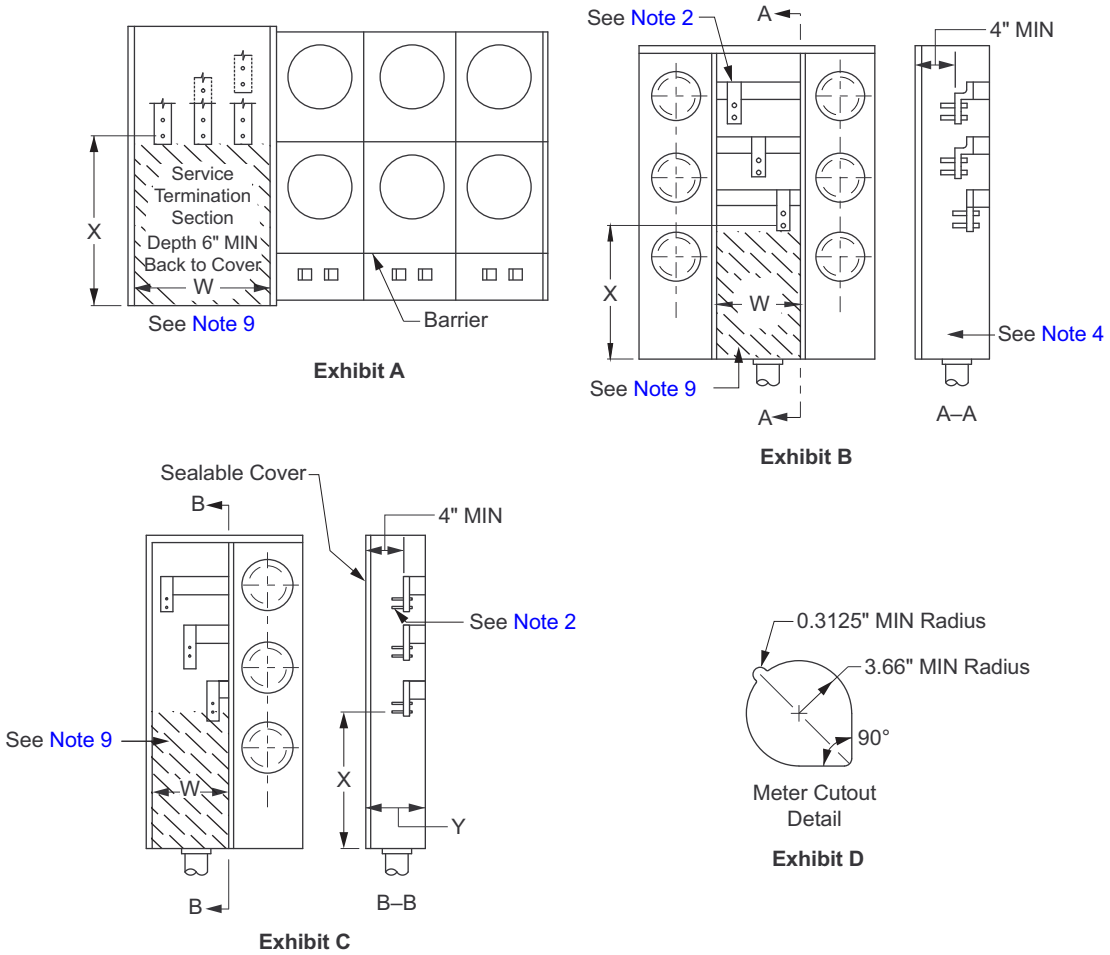

Typical Arrangement for Underground Service Terminating Facilities

Equipment Rating (Amps)	X DIM (MIN)	W DIM (MIN)	Y DIM (MIN)
0–200	11"	6-1/2"	5-1/2"
201–600	22"	10-1/2"	6"

Note(s):

1. Termination enclosure covers shall be as follows:
   - ☐ Independent of other service equipment and removable without disturbing adjacent panels.
   - ☐ Sealable, provided with two lifting handles, and be limited to nine-square feet in area.
2. Terminating facilities for Company-service supply conductors shall be provided as follows:
   - ☐ For equipment rated 200 A, terminations may be aluminum-bodied, pressure-type lugs with a range of 1/0 AWG through 250 kcmil.
   - ☐ For equipment rated 201–600 A, terminations shall be single-position studs, complying with ESR–6, Figure 6–6. For services rated above 200 A, the Company will furnish and install compression lugs.
3. The neutral terminating position shall be identified. A bonding screw or jumper shall be provided if the neutral terminal is insulated from the enclosure.

4. Where service supply conductors cross over horizontal bussing, the bus shall have a barrier or be fully insulated. The shaded space shown in the terminating enclosure is reserved for Company-service lateral conductors only.
5. Meter panels shall be removable to provide access to the customer's equipment with the Company's meters and tamper-proof rings in place. Where there is more than one meter socket per panel, the minimum cutout opening as detailed in Exhibit D, Figure 3–8 shall apply.
6. Dimension "W" is the minimum access opening for the terminating enclosure.
7. Three-inch conduit is the minimum acceptable size. If air conditioning loads are served, a four-inch minimum conduit is required.
8. See Figure 3–20, Figure 3–21, and Figure 3–22 for installation of exposed conduits or conduits installed in a wall.
9. The shaded area of the termination section is for Company-service lateral conductors only.
10. For equipment rated 200 A, the neutral termination height may be reduced to 8-1/2 inches.

Figure 3–9: Underground Pull Box Equipped with Cable Terminations for Commercial or Residential Use — 0–600 V — 0–1,200 A

EUSERC No. 343

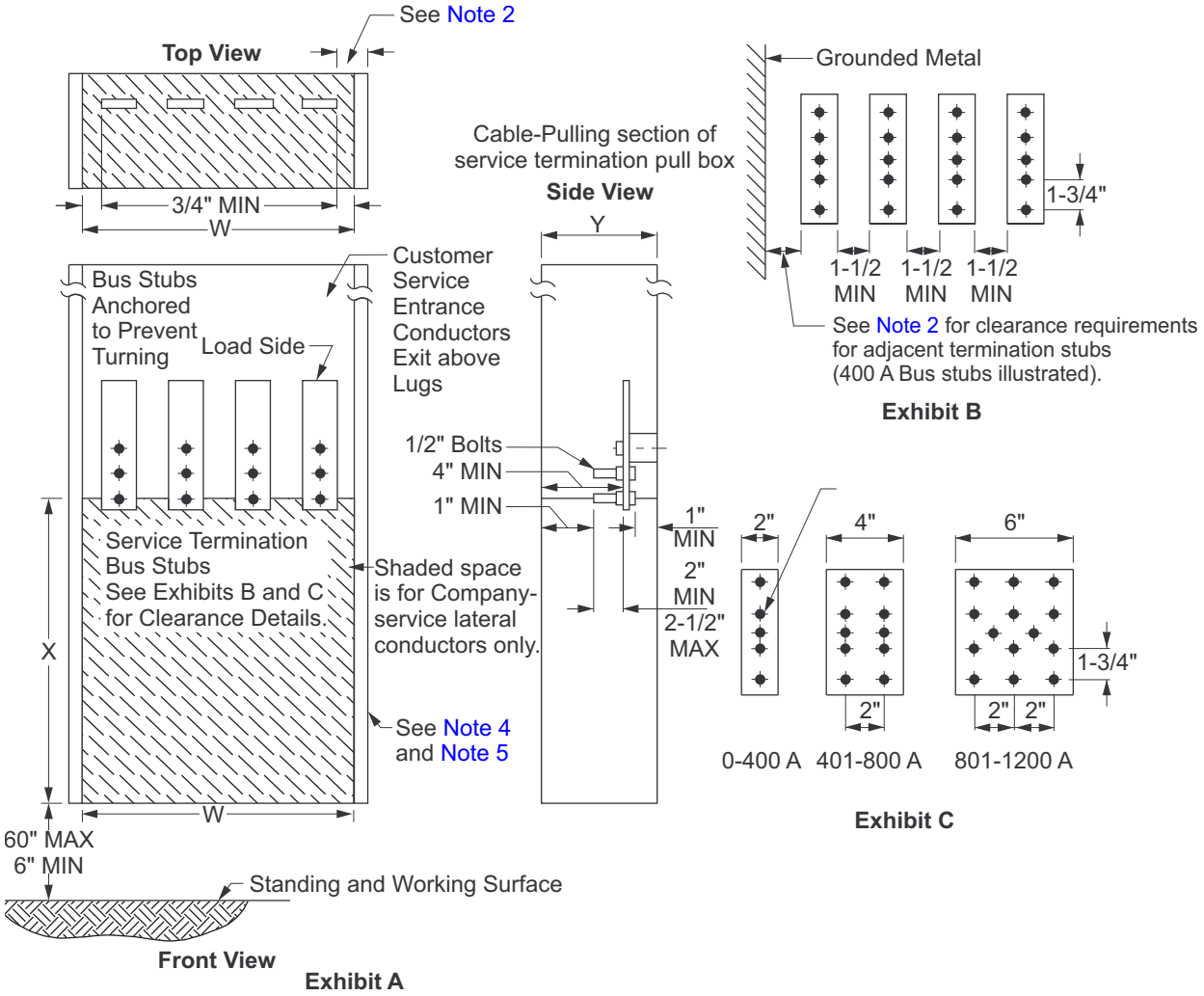

Table 3–5: Minimum Pull Box Dimensions

Service Ampacity (Amps)	W (See Note 5.)		Y Depth (in)	X Height (in)
	3-Wire (in)	4-Wire (in)		
201–400	10-1/2	14	6	22
401–800	16-1/2	22	11	26
801–1,200	22-1/2	30	11	26

Note(s):

1. The above dimensions are for the case where the conduit enters the bottom of the pull box and all load conductors exit above the terminals. Where the service conduit enters from the side or back of the pull box, the “X” dimensions shall be taken from the closest portion of the conduit to the nearest termination bolt.
2. See ESR–6 for minimum termination clearances and for termination bus and bolt details.
3. Pull box covers shall be removable, sealable, provided with two lifting handles, and limited to a maximum size of nine-square feet in area.
4. Clear working space shall be maintained. Return flanges shall not intrude into the shaded space.
5. The “W” dimension is the minimum width of the pull box access opening.
6. Consult the local Service Planning Office for conduit requirements.
7. Terminating facilities shall be secured to prevent bus turning or misalignment when the cables are installed.

Figure 3–10: Combination Disconnecting Device and Terminating Enclosure — 0–600 V — 1,200 A Maximum

EUSERC No. 315

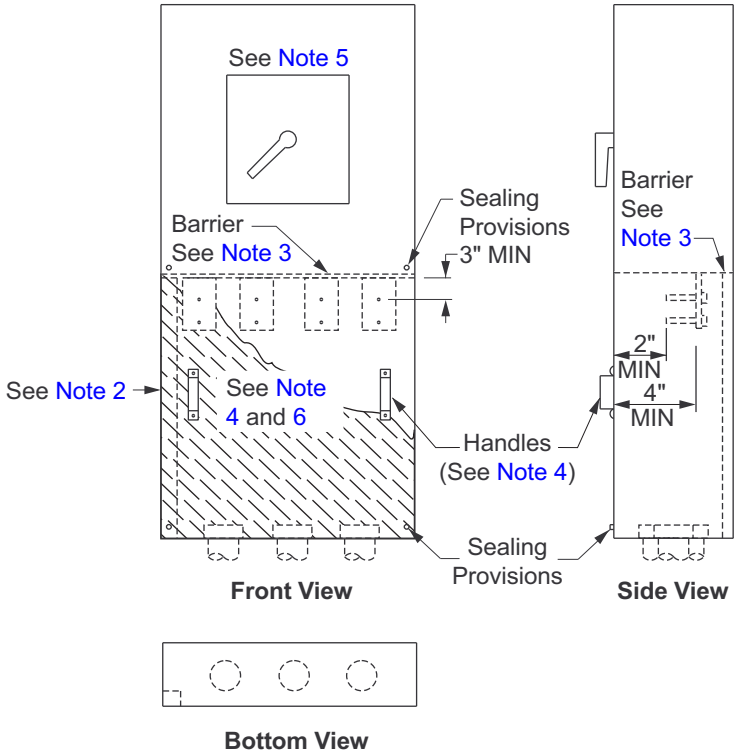

Note(s):

1. A vertical clearance of three-inches minimum shall be maintained between the centerline of the top bolts of the terminating facilities to any obstruction. See Figure 3–9 for terminating enclosure dimensions, and terminating facility clearances and construction details.
2. The grounding electrode conductor may be installed in a fully-enclosed, factory-installed wireway located in either back corner of the pull box. The raceway shall not impede the required working space or reduce any specified clearances.
3. A full width and depth, insulated, rigid barrier shall be provided to separate the termination and main disconnect device compartments.
4. Ensure that terminating enclosure covers are as follows:
   ☐ Independent of other equipment and removable without disturbing adjacent panels.
   ☐ Sealable, and provided with two lifting handles, and limited to a maximum of nine-square feet in area.
5. The main disconnect cover shall be sealable.
6. Shaded space is for Company-service lateral conductors only.

Figure 3–11: Underground Pull Boxes

EUSERC No. 344

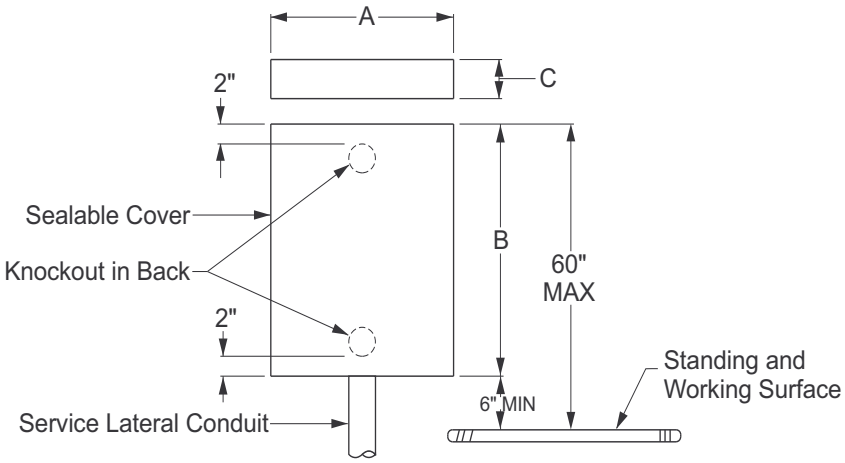

Service Conduit Size (in)	A (in)	B (in)	C (in)
3	16	24	8

Note(s):

1. The service conduit may enter the end or the back within two inches of the end of the pull box, but shall not enter the side.
2. When a service conduit enters the end of a pull box, the opposite end shall not be less than 24 inches from any side wall, ceiling, or other obstruction. Any projection which extends more than the depth of the box from the surface on which the box is mounted shall be considered an obstruction.
3. No conductors other than service conductors shall be installed in any pull box.
4. Provide two lifting handles on pull box covers of four-square feet or more in area; covers not to exceed nine-square feet.
5. Pull box covers shall be provided with a means of sealing consisting of two drilled stud and wing nut assemblies on opposite sides of the cover. All securing screws shall be captive.
6. Consult the local Service Planning Office for conduit requirements.
7. See Figure 3–9 for larger pull boxes equipped with termination facilities.

Figure 3–12: Typical Service Lateral Installation for Single-Family Residence

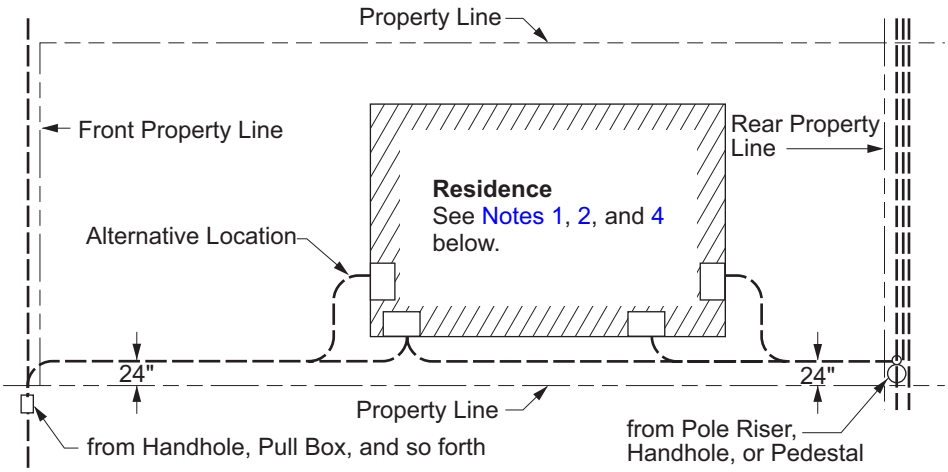

Note(s):

1. When a residence is served from a front property line, the customer's service equipment shall be located as shown in Figure 3–12 (front portion of residence). When served from the rear property line, the service equipment shall be located as directed by the Company representative to provide maximum accessibility for maintenance and meter reading.
2. Contact the Company local Service Planning Office, Table 3–2, before locating service equipment. When service equipment is improperly located because the Company was not contacted in advance, the customer is responsible for all modifications.
3. See ESR–5 for meter access and prohibited meter locations.
4. Also see Section 15.0 and Figure 3–20.

Figure 3–13: Typical Service Conversion from Overhead to Underground

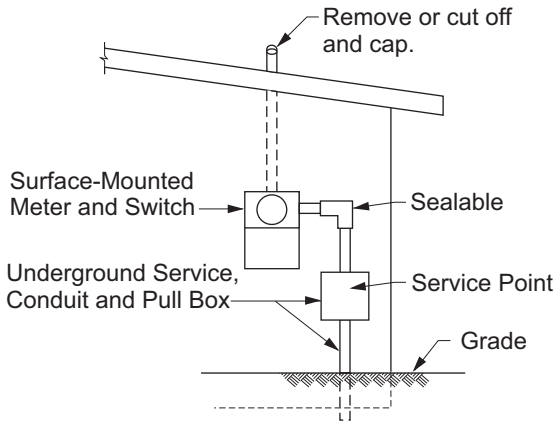

Residential Example A

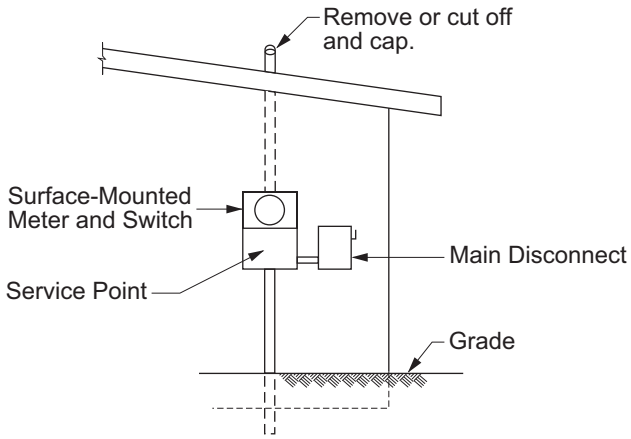

Commercial Example B

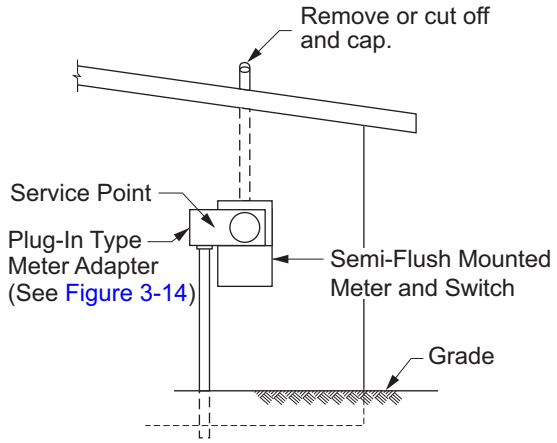

Residential Example C

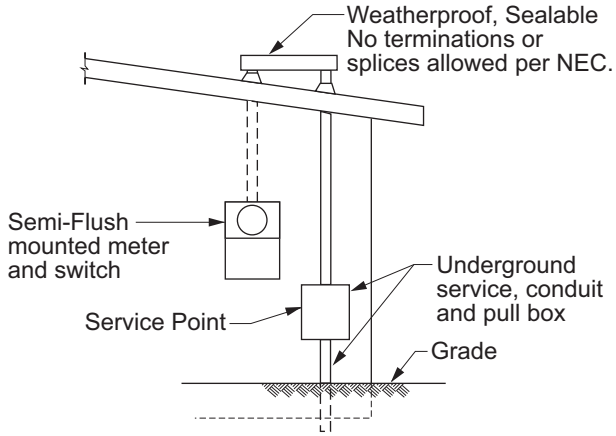

Residential Commercial Example C

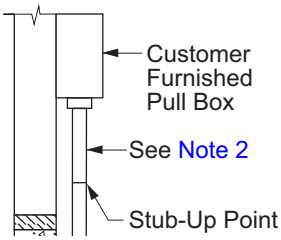

Note(s):

1. Customer to furnish conduits pull boxes, adapters, gutters, trench, and backfill.
2. Conduits may be stubbed-up by utility for customer pick-up.
3. Exposed PVC conduit, where acceptable to local inspection agency, shall be minimum Sch. 40. Where exposed to physical damage, install Sch. 80.
4. Weatherhead-to-weatherhead conversion requires local city, county inspection, jurisdiction approval. Pull box shall be grounded by the customer.

Figure 3–14: Typical Plug-In Type Meter Adapter

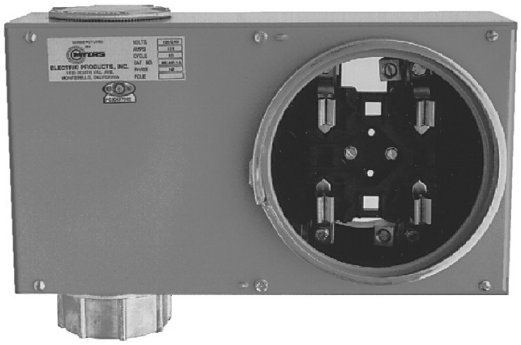

Front View

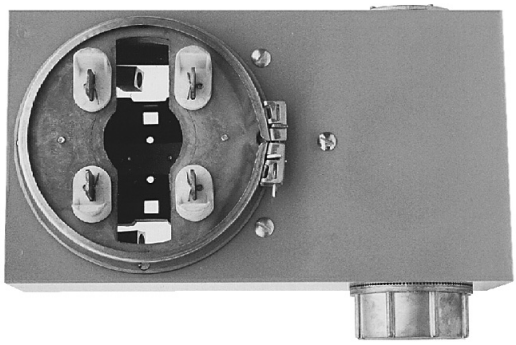

Rear View

Note(s):

1. The plug-in type meter adapter is limited to 120/240 V, 125 A single-phase service only. The maximum cable size to pull and terminate into the adapter is 1/0 CLP due to limited working clearance in the terminating section.

Figure 3–15: Typical Plug-In Type Generation Meter Adapter

Front View

Rear View

Figure 3–16: Plug–In Temporary (Piggyback) Service Adapter

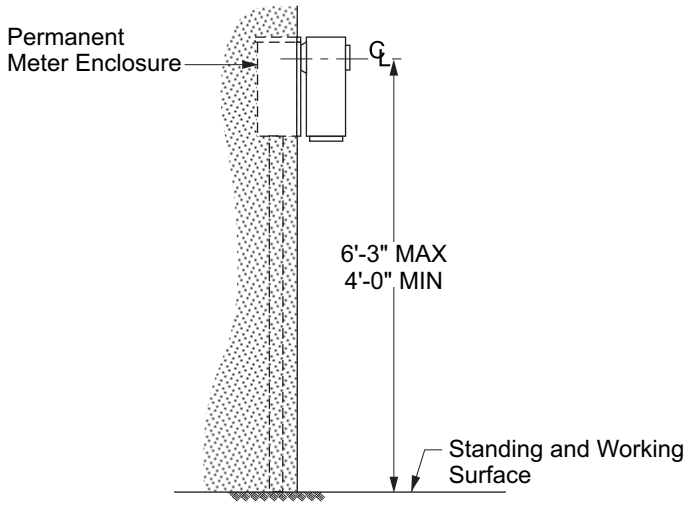

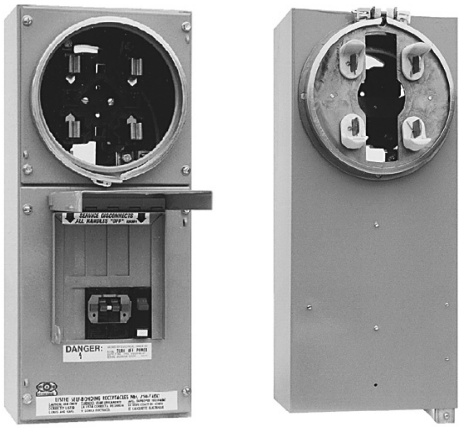

Typical Plug-In Adapter

Note(s):

1. Permanent service cables must be installed and approved by the local inspection jurisdiction before a temporary (piggyback) service adapter may be installed.

Figure 3–17: Temporary Service from a Pad-Mounted Transformer

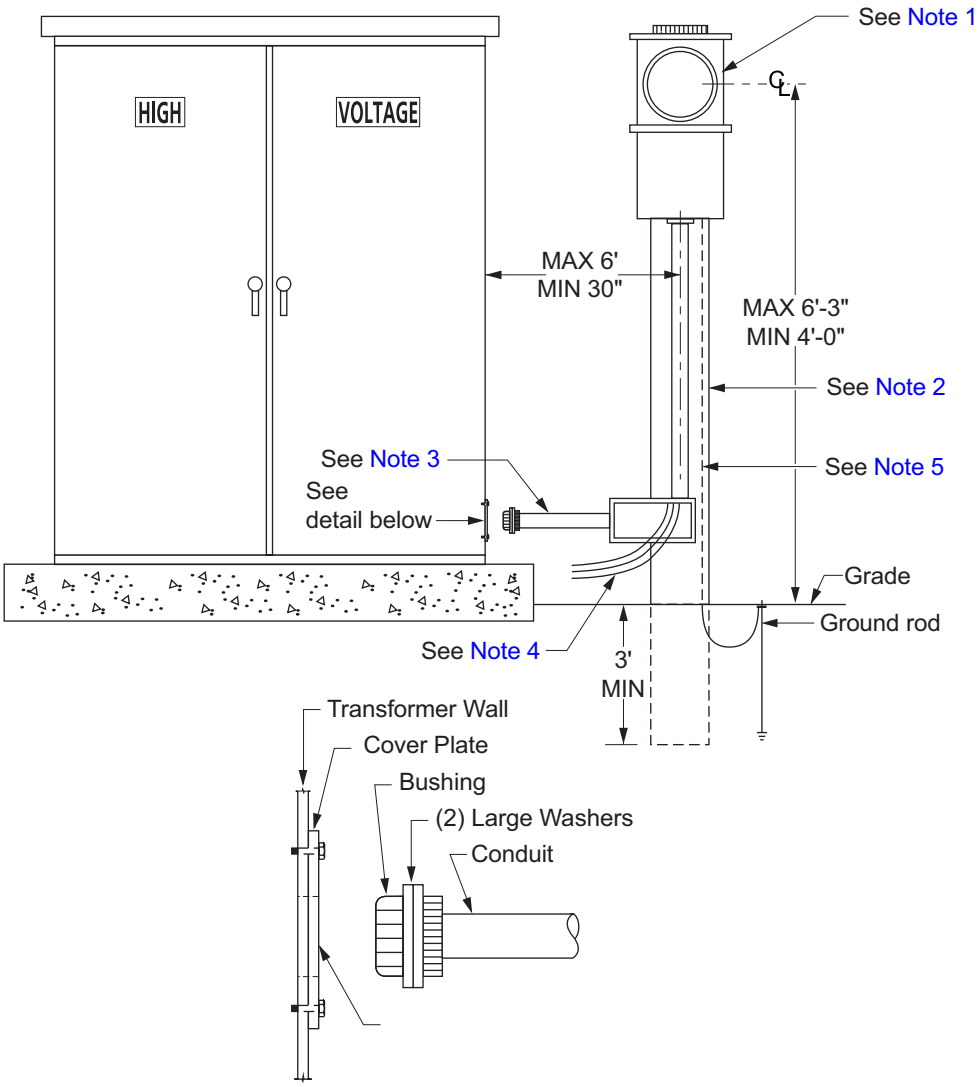

Detail

Note(s):

1. Meter panel per Figure 3–6. For type of meter receptacle and the number of socket terminals, see ESR–5. Meter will be furnished and installed by the Company. A safety socket box with factory-installed test/bypass blocks, as detailed in ESR–5, shall be provided for all three-phase installations.
2. 4" x 6" x 10' (butt-treated) posts three feet in the ground. Overhead conductors shall not be attached to this meter post.
3. Conduit-type and size and wire-type and size as required by NEC.
4. Customer to provide wires long enough to protrude into the transformer enclosure six-feet minimum.
5. Ground wire to be #8 AWG minimum from post to electrode and enclosed in galvanized ridged conduit, or equivalent mechanical protection. Refer to the local inspection agency for alternate or additional requirements.

Figure 3–18: Temporary Service from Secondary Handhole, Pull Box, or Pedestal

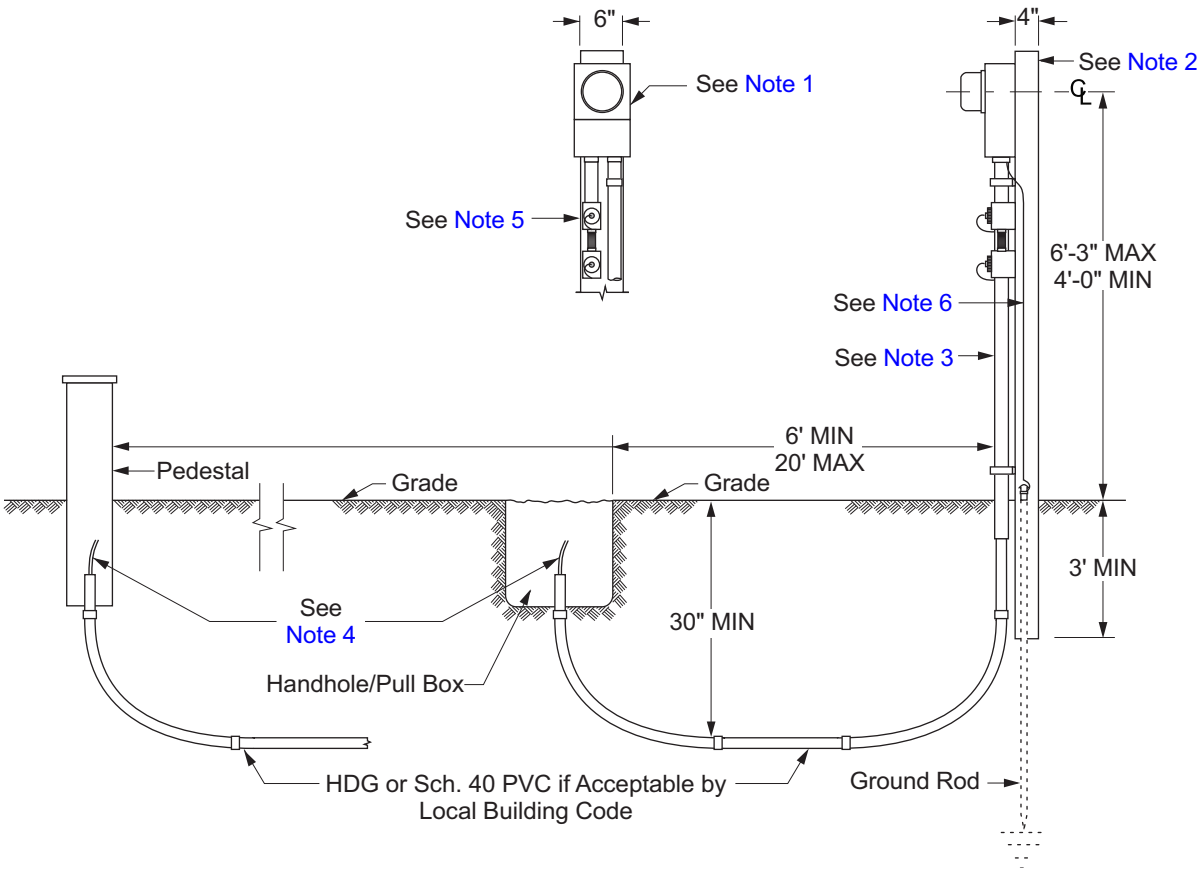

Note(s):

1. Meter panel per Figure 3–6. For type of meter receptacle and the number of socket terminals, see ESR–5. Meter will be furnished and installed by the Company. A safety socket box with factory installed test/bypass blocks, as detailed in ESR–5, shall be provided for all three-phase installations.
2. 4" x 6" x 10' (butt-treated) posts three feet in the ground. Overhead conductors shall not be attached to this meter post.
3. Conduit-type and size and wire-type and size as required by NEC.
4. Customer to provide wires long enough to protrude into the handhole, pull box, or pedestal enclosure six-feet minimum.
5. Refer to local inspection agency and the NEC for main switch and ground fault circuit protection requirement.
6. Ground wire to be #8 AWG minimum from post to electrode and enclosed in galvanized ridged conduit, or equivalent mechanical protection. If a ground rod is used, the following minimum requirements apply:
7. Diameter of rod: 3/4 inch, if iron rod or galvanized pipe.
8. 1/2 inch if solid rod of brass, copper, or copper covered steel.
9. Refer to the local inspection agency for alternate or additional requirements.
10. Set post a minimum of 18 inches from main secondary cable trench.

Figure 3–19: Riser Bend for Multi–Family Residential Service Entrance and Recessed Service Applications

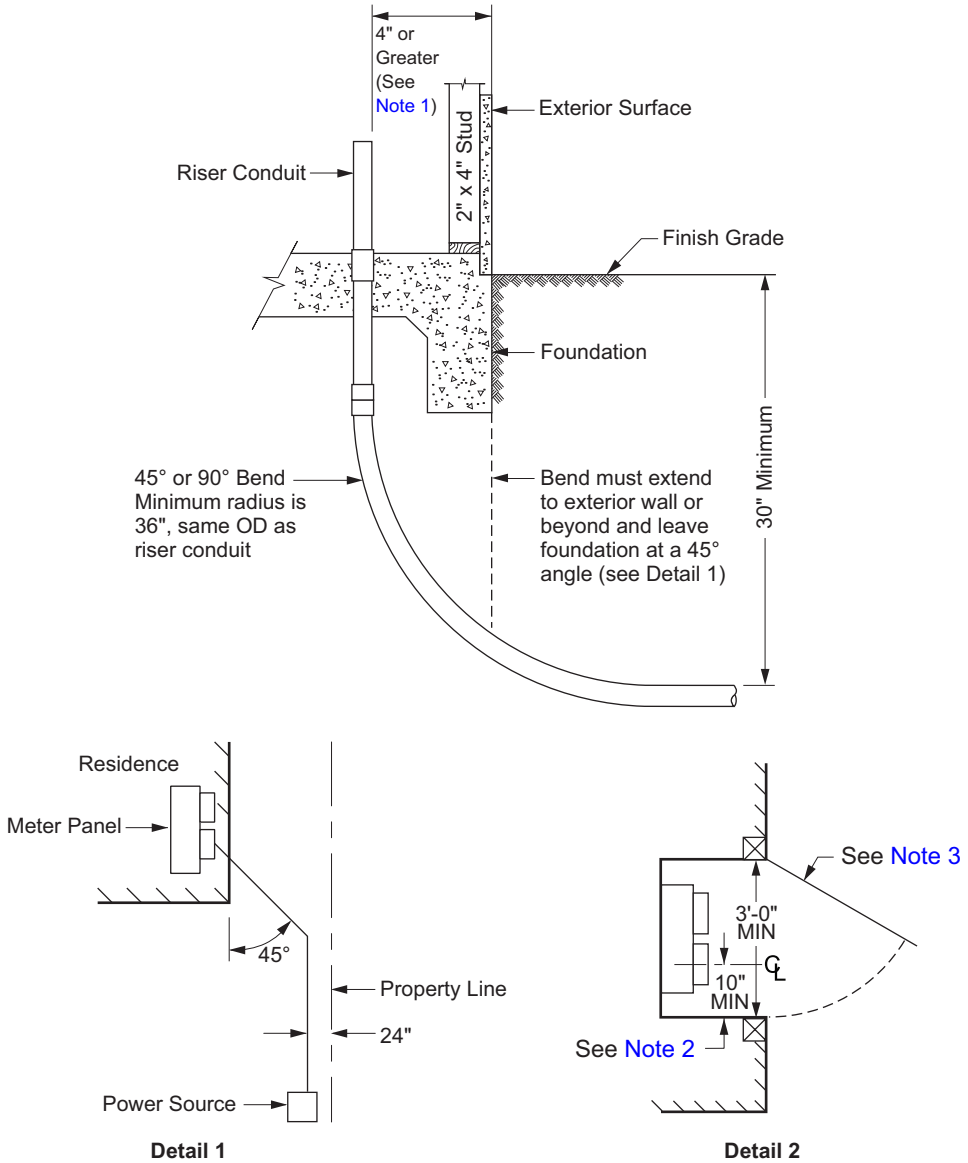

Note(s):

1. A bend must be permanently installed by the developer at the service entrance if the riser is recessed behind the outer wall or if the concrete foundation is poured in such a way as to effectively cause the riser to be recessed four inches or more. Bends may be of HDG or PVC conduit as approved by the local inspection agency.
2. A ten-inch side clearance is required, measured from the centerline of the meter(s) to any obstruction.
3. The exterior door must open a minimum of 90 degrees.

Figure 3–20: Service Entrance for Single-Family Dwelling Service

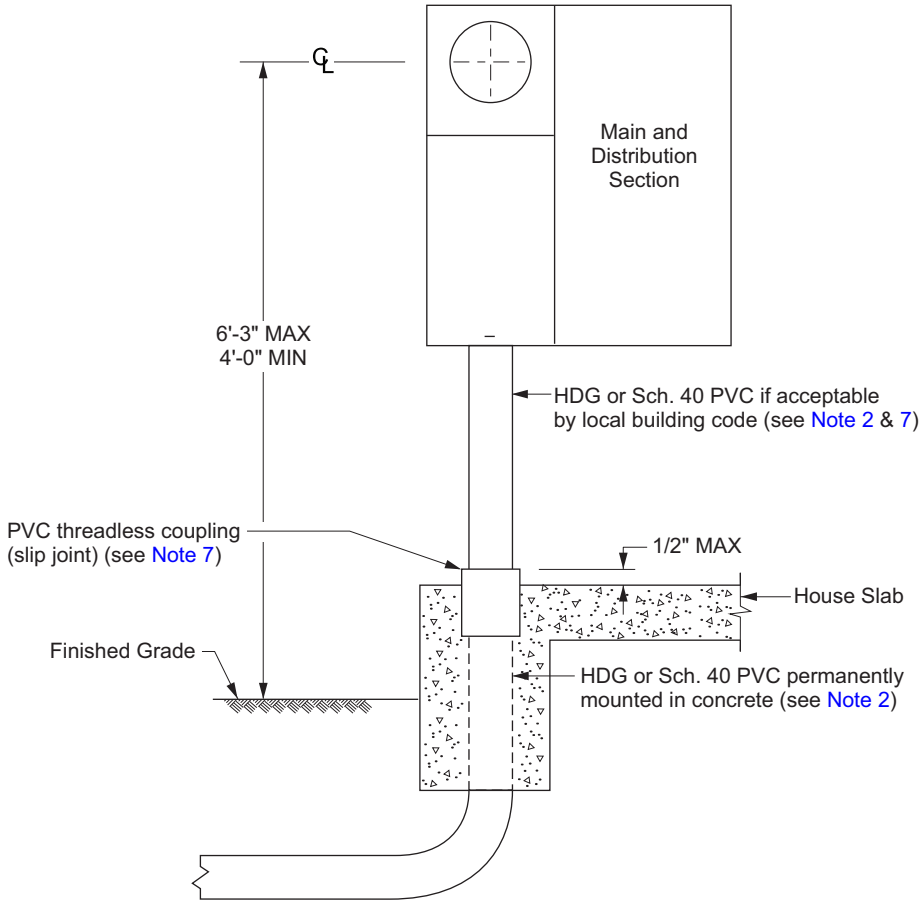

Note(s):

1. Customer's service conduit installation is subject to the approval of the local inspection agency. Backfill and compaction shall comply with all local ordinances.
2. Consult the local Service Planning Office to determine minimum Rigid Conduit to be installed.
3. The minimum conduit size is 2-1/2 inches for 100 A service.
4. Two hundred ampere services requires a minimum conduit size of three inches.
5. A multiple meter service may require larger conduit than specified in Note 2, consult the local Service Planning Office for details.
6. The conduit may be HDG, or where approved by the local inspection agency, minimum Schedule 40 PVC. See Figure 3–21 for exposed conduit.
7. The conduit may be installed in one piece without a coupling or in two pieces with a threadless coupling permanently mounted in the foundation as illustrated in Figure 3–20.

Figure 3–21: Exposed Service Conduit Installation

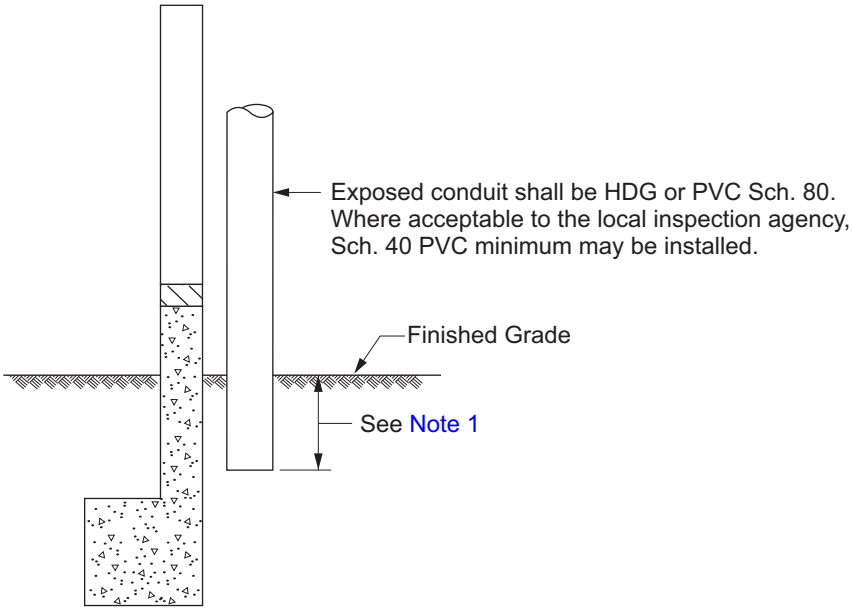

Note(s):

1. See Figure 3–22 for conventional conduit sweep.

Figure 3–22: Riser Bend Installation at Wall or Pad

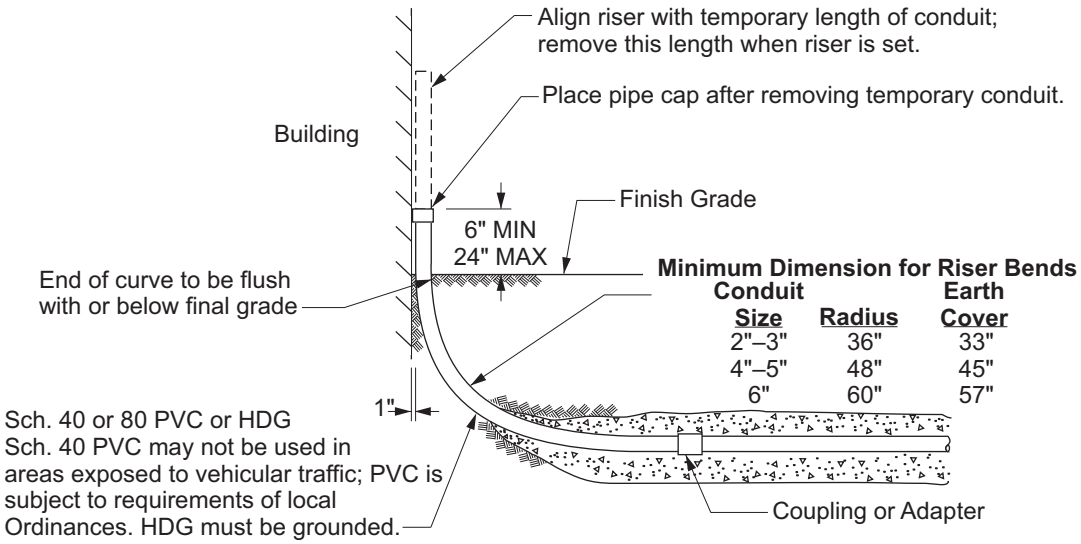

Typical Riser at Building

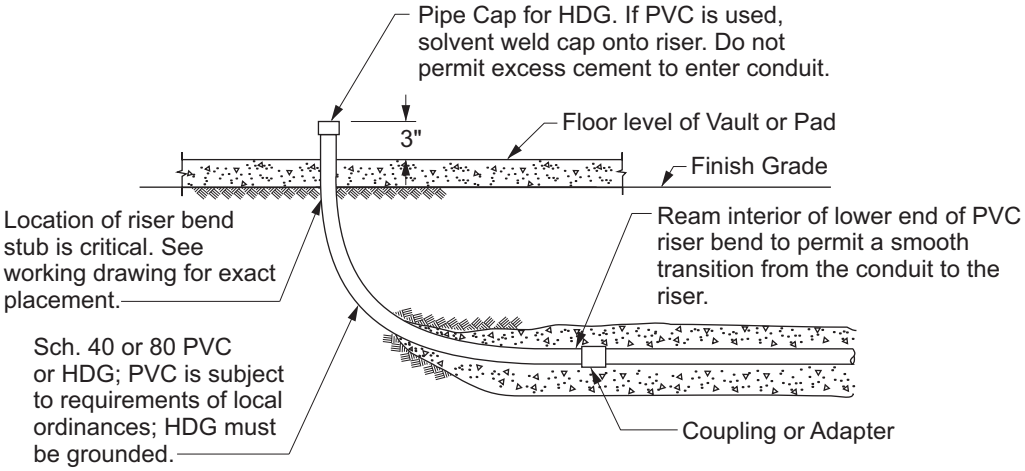

Typical Riser at Vault or PAD

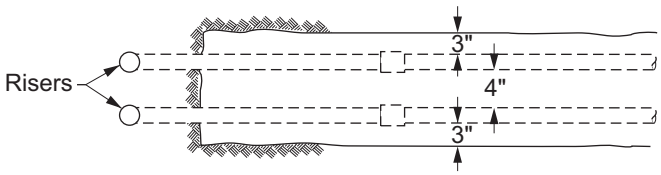

Plan-View For Two Conduit Terminals

Figure 3–23: Handholes, Pull Boxes, and Manholes

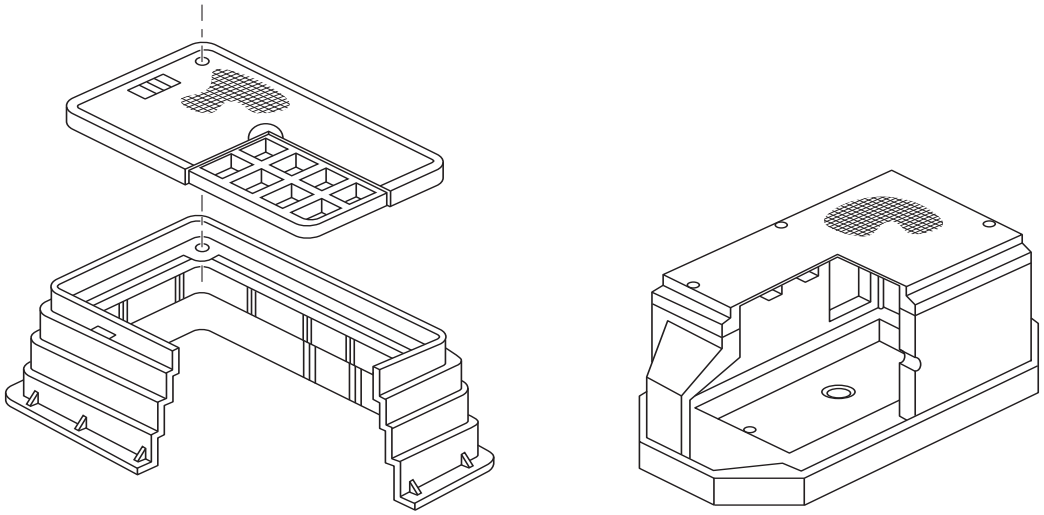

Table 3–6: Handhole, Pull Box, and Manhole Applications and Sizes

Substructure	Material	Typical Application	Inside Dimensions (W x L x D)	SCE Underground Structures Reference Drawing
Handhole [a/]	Plastic	Residential	17" x 30" x 15"	UGS HP 200, HH-9
Handhole	Concrete	Residential/Commercial/Streetlights	17" x 30" x 12"	UGS HP 200, HH-20
Handhole	Polymer Concrete (RPM)	Residential/Commercial	17" x 30" x 18"	UGS HP 200, HH-16, HH-19
Handhole	Polymer Concrete (RPM)	Residential/Commercial	17" x 30" x 24"	UGS HP 200, HH-17
Handhole	Polymer Concrete (RPM)	Residential/Commercial	17" x 30" x 30"	UGS HP 200, HH-18
Pull Box	Concrete	Residential/Commercial	2-1/2' x 4' x 3-1/2'	UGS HP 220.1
Pull Box	Concrete	Residential/Commercial	3' x 5' x 4'	UGS HP 225.1
Pull Box	Concrete	Residential/Commercial	4' x 6-1/2' x 5'	UGS HP 228.1
Manhole	Concrete	Residential/Commercial	Consult the Local Service Planning Office	

Note(s):

1. Manholes, pull boxes, and some sizes of handholes are available in precast concrete. Some handhole sizes are also available in plastic. For approved manufacturers and other specifications, refer to the appropriate Distribution Underground Structures Manual pages listed in Table 3–6.
2. Consult the local Service Planning Office for substructure details, and installation and inspection requirements. See Section 13.0.
3. Substructure covers must be adequate for imposed loading. Traffic-type covers are required in areas accessible to vehicles. Pull box and handhole covers shall be furnished with penta-head, stainless steel cap screws. All covers shall be identified with a 1/2 inch block lettered “EDISON.”
4. Dimensions are inside measurements and are shown in order of width, length and depth. Depths shown are minimum dimensions with required depth depending on the number of conduits and conduit cover.

a/ 17"x30"x15" plastic handhole to be used in planter only areas in rear property with no vehicle access.

Figure 3–24: Typical Mobile Home or Residential Service and Meter Post — Maximum 200 A — 120/240 V

EUSERC No. 307

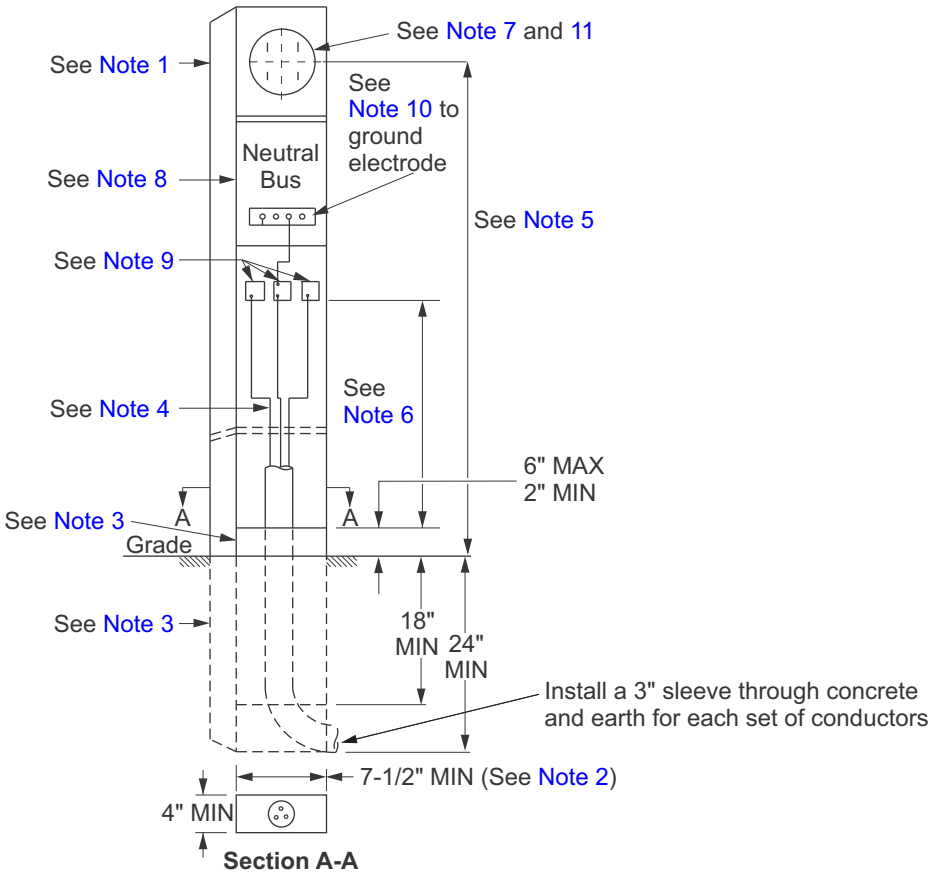

Note(s):

1. This type post shall have a minimum rating of 100 A. Posts shall be installed in such a manner that they will remain plumb and rigid. Construction, material, and corrosive-resistant finish shall be approved by a recognized test laboratory.
2. Minimum width of access opening shall be 7-1/2 inches.
3. The minimum depth of the post in the ground shall be 24 inches with openings at the base to permit the service lateral conduit or conductors to sweep into the post from the front (meter side). A fixed panel shall extend two inches minimum to six inches maximum above grade, and 18 inches minimum below grade.
4. Adequate ventilation shall be provided to inhibit the condensation of moisture within the enclosure.
5. The minimum meter height shall be 36 inches above the grade line when the meter is enclosed, or 48 inches when exposed.
6. The service cable pull and terminating section shall be accessible from either the front or rear of the post by removing an eight-inch minimum width sealable panel (or panels). The removable panel (or panels) shall extend from the top of the fixed panel (see Note 3) and when removed, allow full access to the terminating lugs. The service cable pull and terminating section space shall be restricted to Company use.
7. Meter panels shall be removable, but shall be non-removable when meter is in place. If the meter is enclosed, the enclosing cover shall be hinged and self-supporting, equipped with a clear reading window, and must be removable for meter testing or inspection.
8. The service main disconnect and power outlet section shall have barriers installed to prevent access to the service cable pull and termination section and to unmetered conductors which connect to the socket.

9. The service terminating lugs shall be twin #2 to 350 kcmil aluminum-bodied pressure-type. Lug height, measured to the bottom of terminating lug from the top of the fixed panel, shall be 18 inches minimum and 48 inches maximum. The space between terminating lugs from lugs to sides of post, from lugs to any grounded surface, or from lugs to panel above, shall be 1-1/2 inches minimum. Rigid insulated barriers are required and shall project 1/4-inch minimum beyond any energized parts when this space is reduced. Terminating lugs may be positioned either in line or staggered and access shall be unobstructed when all service conductors are in place.
10. A customer-accessible equipment grounding lug shall be provided.
11. The meter socket base shall be fabricated with components tested by a recognized test laboratory and shall be provided with a sealing ring. The meter socket shall be mounted on a support which is attached to the meter panel. Sockets shall be factory-wired with conductors in a separate or barriered raceway from the service terminating lugs to the meter socket. These conductors shall be inaccessible from the main disconnect and power outlet section. The conductor which extends to the meter socket shall be connected at the service terminating lugs, independently of the connection for the service lateral conductors.
12. An unobstructed work space of 36 inches minimum entirely on the property of the customer shall be maintained in front of metering and terminating sections.
13. The grounding electrode conductor may be run through the terminating enclosure.
14. The service equipment (service and meter post), all wiring, and equipment from the meter post to the customer's structure shall be provided by the owner/developer.
15. Ringless-type meter sockets are not acceptable.
16. Consult the local Company Service Planning Office before locating the service equipment. When service equipment is improperly located due to the Company not being contacted prior to the installation, the owner/developer is responsible for all modifications.

Figure 3–25: Typical Underground Layout for Mobile Homes

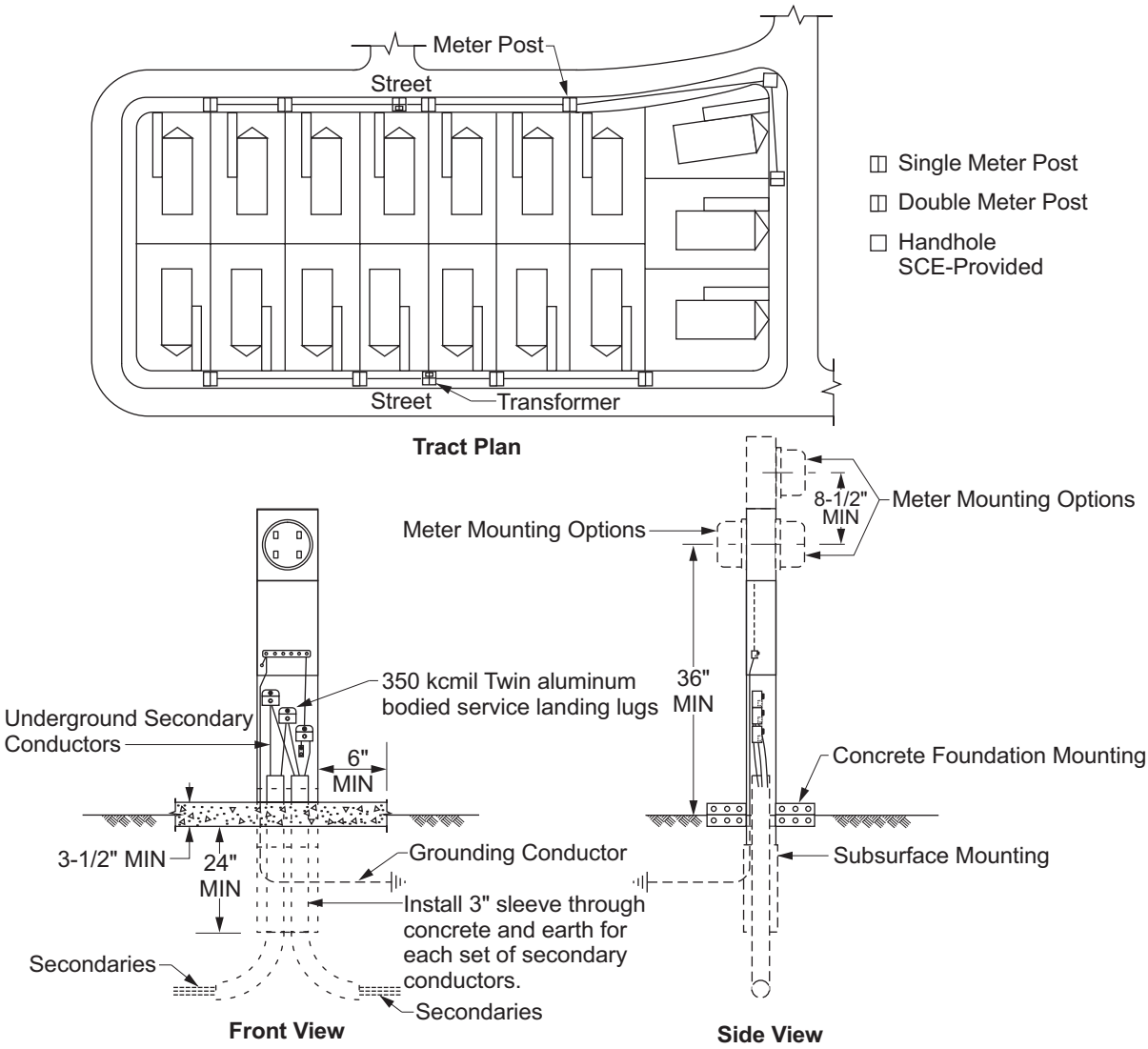

Note(s):

1. This standard applies to mobile home parks only. Mobile home posts shall be installed in accordance with the provisions in California Administrative Code, Title 25.
2. Mobile home parks shall be served from the front street easement. The service equipment (service and meter post) shall be located as shown in Figure 3–25. When possible, the double-meter type post should be used to serve two mobile homes from one location. Dual meter panels are acceptable with meters mounted back-to-back or in vertical configuration providing the meter post meets all requirements. Meter sockets shall be permanently marked to indicate premises served. See ESR–5.
3. Contact the Company local Service Planning Office before locating the service equipment. When service equipment is improperly located due to the Company not being contacted prior to installation, the developer is responsible for all modifications.
4. See Figure 3–24 for service and meter post requirements.
5. All wiring and equipment from the meter post to the customer's mobile home shall be provided by the developer/owner.
6. The authority having jurisdiction (state/local) may require the park developer to file for special approval when the service and meter post is located in the front street easement.

Figure 3–26: Non-Residential Service Pedestals — 0–200 A — 0–600 V

EUSERC No. 308

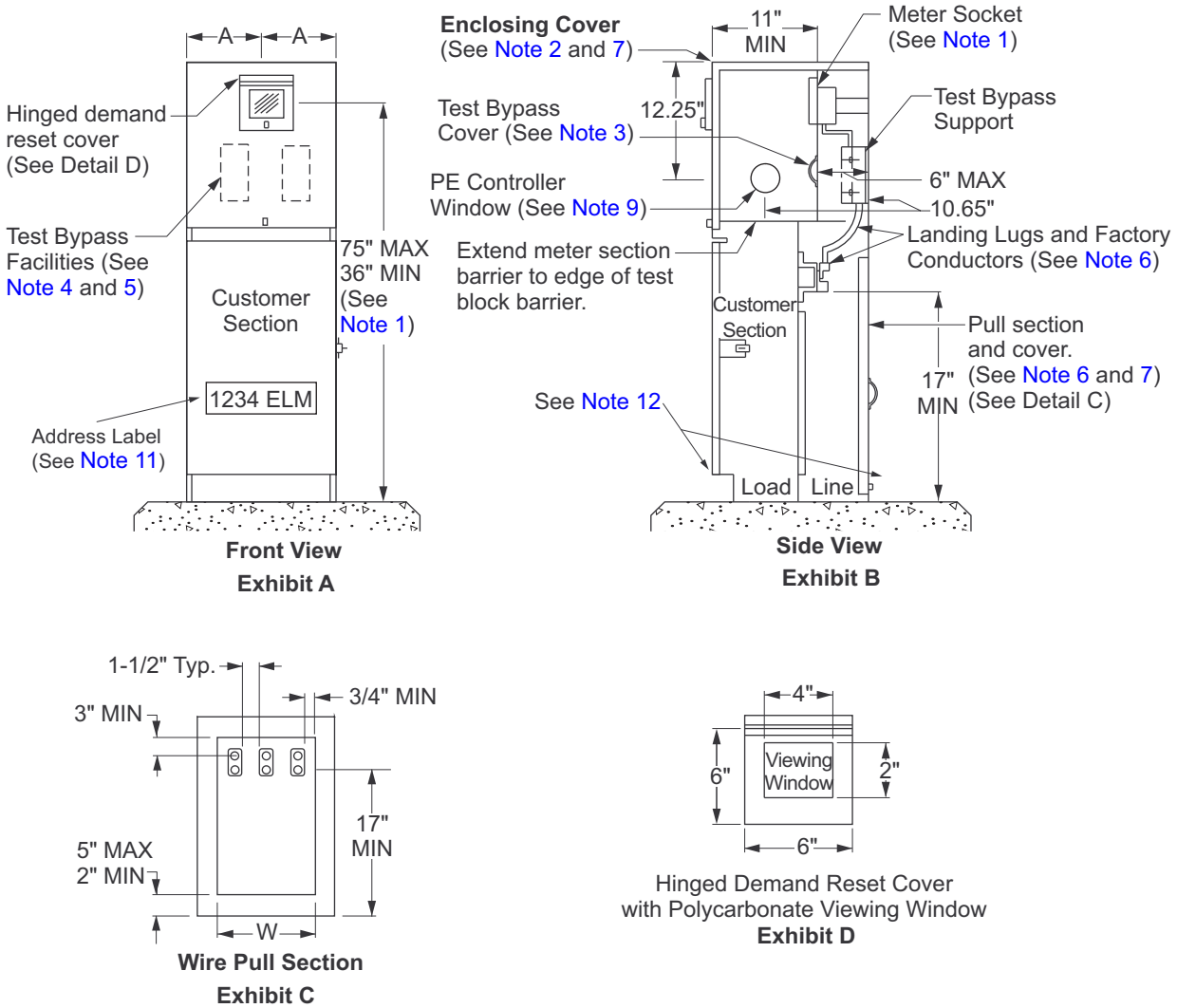

Table 3–7: Terminating Pull Section Minimum Dimensions

Service	W[a/] (in)	A[b/] (in)
1 Phase	10-1/2	10
3 Phase	12-1/2	

a/ See Note 6.

b/ See Note 2.

Note(s):

1. The meter socket shall be rigidly mounted on a support, attached to the meter panel, and provided with a sealing ring. Ringless sockets are not acceptable. Meter height is measured from the center of the meter socket.

2. The meter socket shall be enclosed and the enclosing cover shall be as follows:
   - ☐ Hinged to allow the top and front to be rotated back as one unit to expose the metering compartment. The “A” Dimension applies when the metering compartment side panels are fixed and obstruct the meter side clearance. The lifting force required to open the cover shall not exceed 25 pounds.
   - ☐ Equipped with a lifting handle.
   - ☐ Provided with a demand reset cover with a viewing window (see Exhibit D). The reset cover shall be sealable and lockable with a padlock having a 5/16-inch lockshaft.
3. Test-bypass compartment covers shall be sealable and fitted with a lifting handle; covers exceeding 16 inches in width shall require two lifting handles.
4. Test-bypass blocks with rigid barriers shall be furnished, installed, and wired or bussed to the meter socket by the manufacturer. Connection sequences shall be LINE-LOAD from left to right and clearly identified by 3/4-inch minimum block letter labeling. See ESR–5 for test-bypass block details.
5. Test-bypass shall be installed with the following clearances:
   - ☐ Three inches of vertical clearance from the upper test connector stud to the upper compartment access opening and 3 inches from the center of the cable terminal screw to the lower compartment access opening.
   - ☐ One and one-half inches of side clearance from the rigid insulating barriers to the compartment sides and one inch to the compartment access openings.
6. The terminating pull section requirements are as follows:
   - ☐ Comply with the minimum dimensions shown in Table 3–7 (the “W” Dimension is measured between the access opening return flanges), accept a minimum three-inch conduit, and the cover shall be equipped with a lifting handle.
   - ☐ Be equipped with aluminum-bodied, pressure-type lugs, with a range of #6 AWG through 250 kcmil, for termination of the service conductors. Insulated cable or bus shall be installed between the termination lugs and the test-bypass facilities.
   - ☐ Have a protective metallic barrier (16-gauge minimum) between the pull section and the customer distribution section. There shall be a 1/4-inch minimum clearance between the customer section wall and the barrier to prevent screws and bolts from protruding into the pull section.
7. Compartment covers (for example, meter cover, demand reset cover, and pull section) shall be sealable and lockable with a padlock having a 5/16-inch lockshaft.
8. Internal equipment attached to the outer walls of the enclosure shall be secured in place with devices that may not be loosened from the outside. Screws or bolts requiring special tools for installation or removal are not acceptable.
9. Pedestals serving both metered and unmetered loads, for instance, traffic signals and street lighting, must have landing lugs, with customer wire from lugs-to-bypasses (metered load) and from lugs-to-breakers (unmetered loads). A photoelectric (PE) receptacle shall be required in the meter/test bypass compartment for the unmetered service. Company will furnish and install PE controller for unmetered service.
10. Pedestal shall be structurally supported with anchors on a concrete pad.
11. Labeling shall consist of machine-engraved laminated phenolic (or equivalent) placard. The placard shall have one-quarter of an inch black letters/numbers on white-colored material which is readily visible and mechanically attached on the exterior front of the pedestal's meter door panel.
12. A 36-inch flat concrete working space with a 2% maximum grade is required at the meter section and the utility/pull section of the pedestal. Traffic lanes shall not be considered part of the working space. Contact SCE peronnel/inspector prior to installation.

Figure 3–27: Non-Residential, Unmetered Service Pedestal — 0–200 A — 0–240 V — Single-Phase — LS-2A, Street Lighting Systems Only

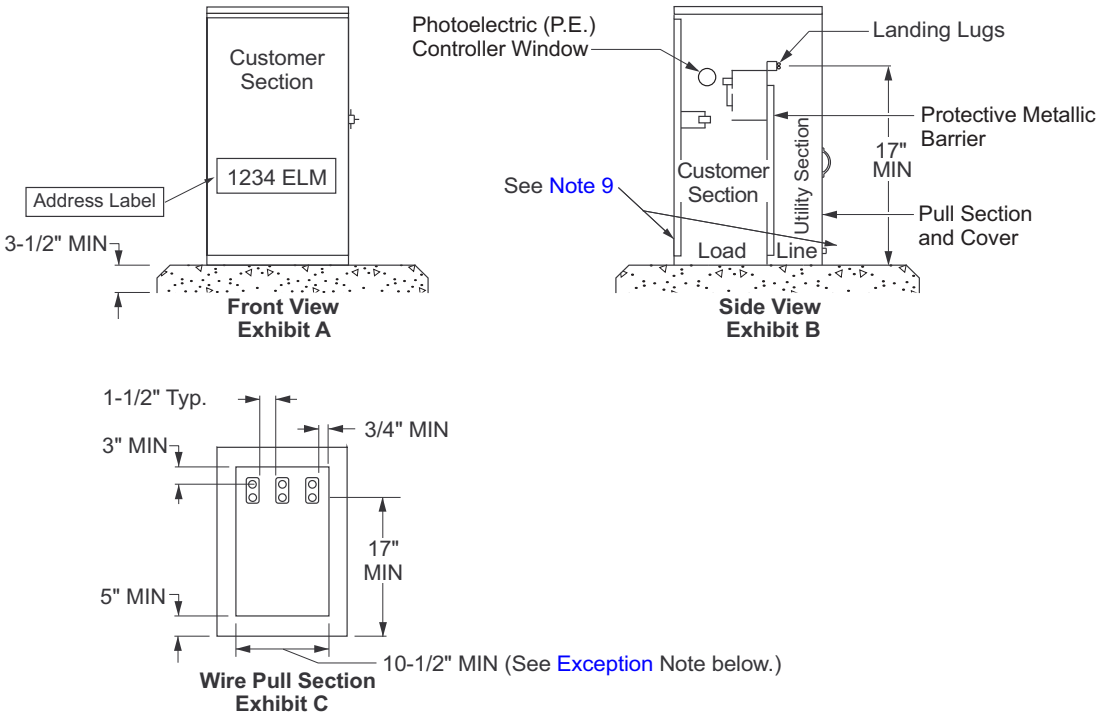

Note(s):

1. The terminating pull section requirements are as follows:
   - ☐ Be equipped with aluminum-bodied, pressure-type lugs, with a range of #6 AWG through 250 kcmil, for termination of the service conductors.
   - ☐ Have a protective metallic barrier (16-gauge minimum) between the pull section and the customer distribution section. There shall be a 1/4-inch minimum clearance between the customer section wall and the barrier to prevent screws and bolts from protruding into the pull section.
   - ☐ Comply with the minimum dimensions shown. The width dimension is measured between the access opening return flanges, accept a minimum three-inch conduit, and the cover shall be equipped with a lifting handle.
     Exception: When the service cable pull and terminating section is accessible from either the rear or side of the pedestal by removing an 8-inch minimum width sealable panel (or panels), the removable panel (or panels) shall extend from the top of the fixed panel, and when removed, allow full access to the terminating lugs. Rigid insulated barriers are required and shall project 1/4-inch minimum beyond any energized parts when this space is reduced. Terminating lugs may be positioned either in-line or staggered and access shall be unobstructed when all service conductors are in place.
2. Compartment cover of the pull section shall be sealable and lockable with a padlock having 5/16-inch lockshaft.
3. Internal equipment attached to the outer walls of the enclosure shall be secured in place with devices that may not be loosened from the outside. Screws or bolts requiring special tools for installation or removal are not acceptable.
4. For identification purposes, the numeric portion of the address must be painted with weatherproof paint on the exterior face of the portion of the pedestal facing the street or drivable surface in numbers at least one inch high.
5. Service pedestals shall have a clear lens (window) for PE cells and face north and away from automobile headlights when possible.
6. Pedestal shall be structurally supported with anchors on a concrete pad.
7. If customer's load exceeds the 1,000-watt capacity of the PE cell, an auxiliary relay is required.
8. Customer shall furnish and install all of the material listed below:
   - ☐ PE receptacle located in the customer section of the service pedestal
   - ☐ PE Cell for unmetered LS-2A pedestal
   - ☐ Auxiliary relay (when required)
   - ☐ Disconnect device
9. A 36-inch flat concrete working space with a 2% maximum grade is required at the meter section and the utility/pull section of the pedestal. Traffic lanes shall not be considered part of the working space. Contact SCE peronnel/inspector prior to installation.

Figure 3–28: Non-Residential, Unmetered Service — 0–200 A — 0–240 V — Single-Phase — LS-2B, Street Lighting Systems Only

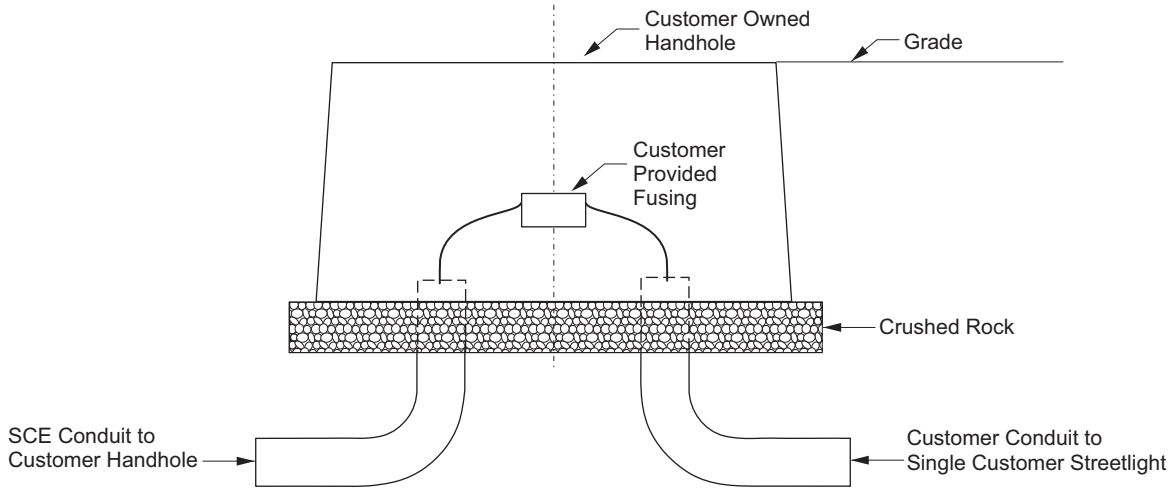

Note(s):

1. LS-2B provides an unmetered point of service for a single customer owned streetlight.
2. A dedicated service shall be provided from an existing distribution system to a customer handhole.
3. Points of service shall be designed up to, and including the customer owned handhole per SCE streetlight standards.
4. Customer shall furnish and install all of the material listed below:
   - ☐ Customer Owned Handhole with Customer provided labeling
   - ☐ Duct, trench/excavation back to the distribution source
   - ☐ Cable, and other materials from handhole to streetlight
   - ☐ Other material as required
   - ☐ Photocontroller
   - ☐ Fusing per NEC standards

Table 3–8: LS-2B Streetlight Design Requirements

Handhole[a/]			Conduit	Conductor
Structure (W x L x D)	**Material**	**Location**		
13” x 24” x 15”	Plastic	Parkways and soil	1-1/2”	#8 Al duplex
13” x 24” x 24”	Concrete	Sidewalks and concrete		

[a/] Customer Owned Handhole.

This page intentionally left blank.

ESR–4: Company-Owned Transformer on Customer's Premises

TABLE OF CONTENTS

SECTIONS AND SUBSECTIONS		PAGE
1.0	General Information	4–3
2.0	Pad-Mounted Transformers and Related Service Equipment	4–5
2.1	Service Equipment	4–5
2.2	Service Connections	4–5
2.3	Grounding	4–6
3.0	Outdoor Transformer Enclosures	4–6
3.1	Walled Transformer Enclosures	4–6
3.2	Fenced Transformer Enclosures	4–6
4.0	Customer-Owned Transformer Vault Room COTVR	4–8
4.1	Walls, Ceilings, and Floor Requirements	4–9
	Refer to ESR-9: Appendix B for COTVR Reference. Transformer Room Equipment and Personnel Access.	4–11
4.2	Primary Cable and Conduits	4–13
4.3	Secondary Cable Configuration	4–13
5.0	Subsurface Transformers in a Subsurface Enclosure	4–13
6.0	Transformers on Pole-Type Structures	4–13

FIGURES

4–1	Transformer Room Plan View (Typical)	4–11
	Transformer Room Side View Equipment Access Opening below Grade Level	4–12

TABLES

4–1	Approved Methods of Transformer Installation	4–4
4–2	Pad-Mounted Transformers — General Locations	4–5

This page intentionally left blank.

ESR–4: Company-Owned Transformer on Customer's Premises

1.0 General Information

Southern California Edison (SCE) Company requires transformers and related service equipment installations on the Applicant's premises when, SCE determines such installations are necessary. The Applicant shall provide the required space on their premises at the location approved by SCE for transformers, switches, capacitors, and electric protective equipment when required. The Applicant shall consult with the local Service Planning Office to determine the proposed transformer installation method.

In cases where SCE plans to install transformers and related equipment on the customer's premises, SCE may require the Applicant to furnish, without cost to SCE, an easement providing adequate space for SCE's lines and equipment installation.

Easement and space provisions shall maintain the required clearances between SCE's facilities and adjacent structures. This shall include adequate provision for ingress to and egress from these facilities by company employees, and shall provide truck access or other approved means for the installation, maintenance, and replacement of such facilities. Any room or enclosure provided by the customer shall comply with all applicable laws of the State of California, and/or municipal regulations of other public bodies having jurisdiction thereof, and approved by SCE.

Where SCE's transformers and other equipment are to be located on the Applicant's premises, the installation shall be made by one of the following methods, as shown in Table 4–1. SCE shall approve the installation with consideration being given to the customer's demand load, suitability for the particular application, and SCE's operating and maintenance requirements. The capacity of the transformer installation shall be determined by SCE.

In general, transformer room designs shall comply with the latest requirements of:

1. The corresponding applicable Codes and Standards, including but not limited to, the requirements of the California Electric code (CEC) and National Electric Code (NEC)
2. The requirements of Local Authorities Having Jurisdiction
3. SCE

The scope of compliance shall include, but not be limited to, items such as: room locations, walls, ceilings, and floor configurations and design, doorway protection, door stills/curbs, and ventilation opening locations, arrangement, size, covering, damper installation, and ducts.

Table 4–1: Approved Methods of Transformer Installation

1. A pad-mounted transformer outside of the structure/building, on a pad or slab box provided by the Applicant. This is SCE's standard installation. The Applicant is required to furnish and install the required protective structures, for example, perimeter wall or barriers, as specified by SCE.
2. In an approved outdoor transformer enclosure provided by the Applicant at their expense. Such enclosure shall be furnished, installed, owned, and maintained by the Applicant. It must meet SCE's specifications and design requirements for such things as access, ventilation, drainage, fire protection, and grounding system.
3. In an approved transformer room located inside a building. The Applicant will provide the room at their expense. The room on the Applicant's premises shall be furnished, installed, owned, and maintained by the Applicant. It must meet all the requirements of the Local Authority Having Jurisdiction and all applicable SCE's requirements and specifications. See Section 4.0 for transformer room requirements. The maximum size transformer for this type of installation shall not exceed 2500 kVA.
4. Subsurface transformer in a subsurface enclosure provided that it is not technically feasible to install a pad-mounted transformer on the customer's property, or installations in the public property and public rights-of-way where the local governments create insurmountable obstacles for above-ground equipment. This type of installation shall be provided by the customer at their expense.
5. On a pole-type structure, for transformer installations of 500 kVA total or less.
6. Single SCE-Owned Customer Substation. When SCE elects to supply a customer from a transmission line and install an SCE-owned substation on Applicant's Premises, Applicant shall furnish, install, own and maintain at its expense the necessary site improvements as specified by SCE for the proper installation of the transformer. Such improvements shall include, but are not limited to, a concrete pad or foundation, grounding system, fences and gates, access road, grading, and paving as required, and so forth. SCE will furnish detailed information on SCE's requirements for a single customer substation.

2.0 Pad-Mounted Transformers and Related Service Equipment

Where using pad-mounted equipment, installations shall be made in accordance with applicable SCE rules, procedures and requirements, including state and local codes and ordinances.

The Applicant shall furnish and install SCE approved pads or slab boxes at the Applicant's expense. Consult the SCE Service Planning Department for structure specifications and installation requirements.

SCE shall specify locations for the pads and slab boxes. Table 4–2 identifies the general locations for these structures.

Table 4–2: Pad-Mounted Transformers — General Locations

General Requirements for Placement of Pads and Slab Boxes
1. A clearance of at least eight feet must be maintained on the door side of any pad-mounted transformer or switch for operating purposes. This clearance shall be measured from the edge of pad or back of access opening.
2. A clearance of at least three feet must be maintained on the non-door side of any pad-mounted transformer or switch. This clearance shall be measured from the edge of the pad.
3. A horizontal clearance of 12 inches must be maintained from the edge of the pad or slab box to projections of the building foundation or other building projections.
4. Transformers cannot be placed directly in front of or beneath windows that can be opened, entryways, or stairways.
5. Transformers will not be exposed to damage from vehicular traffic. Where exposed to such damage, protective barriers will be required. See ESR–3 for barrier details.
6. For multiple pad-mounted equipment installations, a clearance of at least three feet must be maintained between units to allow air ventilation/circulation.
7. Whenever possible, place pad-mounted structures and equipment away from areas with frequent irrigation to help prevent future corrosion.

2.1 Service Equipment

Service equipment installations shall be made in accordance with the applicable sections of these Electrical Service Requirements. See ESR–5 for EXO installations and ESR–6 for switchboard designs and installations below 600 V.

Service equipment locations must have SCE approval prior to the installation of any equipment. Where equipment is improperly installed without SCE approval, any necessary modifications shall be made at the Applicant's expense. See ESR–5 for prohibited meter locations.

2.2 Service Connections

Install a service entrance busway when more than three overhead service-entrance conductors per phase are necessary. See ESR–2 and ESR–7 for busway details. The height of the busway above grade and the busway-service head location shall be specified by SCE. Unsupported busway shall extend a maximum of 30 inches inside the vault or enclosure.

SCE will furnish and install the necessary terminal lugs and fittings for its wires or cables. SCE will make the connections to its facilities and the customer's service-entrance conductors or busway.

2.3 Grounding

The Applicant shall furnish and install all grounding materials. Consult the local Service Planning Office for information on specific details and installations.

3.0 Outdoor Transformer Enclosures

Outdoor transformer enclosure installations shall comply with the latest requirements of:

1. Applicable codes and standards, including but not limited to, the requirements of the CEC and NEC
2. The requirements of local authorities having jurisdiction
3. SCE

The Applicant shall, at their expense, provide and maintain a concrete pad or foundation of such dimensions and specifications required by SCE.

Enclosures are required when the installation of SCE transformers, other than pad-mounted or subsurface transformers, are to be installed outdoors.

3.1 Walled Transformer Enclosures

When the Applicant desires or SCE requires that the SCE's transformers and switching equipment are to be installed in an outdoor walled enclosure surrounding or in conjunction with the concrete pad or foundation specified in the foregoing, and such installation has been approved by SCE, the Applicant shall, at their expense, provide the pad or foundation and the walled enclosure, together with any protective overhead screen, ground electrodes or other components required by SCE. All dimensions and details of construction of the pad or foundation and the walled enclosure shall be approved by the Local Authority Having Jurisdiction and SCE.

The enclosure shall comply with the Electrical Safety Orders of the State of California, and/or with all applicable laws of the state, municipal regulations, or regulations of other public entities having jurisdiction.

Where the customer has complied with these requirements, SCE will complete the installation consisting of but not limited to: the transformer, primary and secondary conductors, terminations and cable racks, and other associated service equipment.

3.2 Fenced Transformer Enclosures

Where fenced transformer enclosures are used, the Applicant shall, at their expense, furnish and install a fenced enclosure and the required equipment supporting structures in accordance with the requirements referred to above in Section 3.0

Normally, fenced transformer enclosures shall be located at least 6 feet from all buildings, but may be less than 6 feet from buildings provided:

1. The adjacent building walls are of three-hour fire-rated construction.
2. The customer has installed protective mesh-type fencing, specified by SCE, on the roof of the building above and along all walls which are less than six feet horizontally from the transformer enclosure.
3. All clearances specified in these above requirements are maintained.

High-voltage supply conductors from SCE's lines to an outdoor fenced transformer enclosure can be installed overhead or underground. Where overhead supply is undesirable, is not practical, or is not in accordance with local ordinances, underground supply conductors shall be installed in accordance with SCE's rules governing the supply of underground service.

Service shall be taken from the enclosure by means of overhead busway, overhead conductors in rigid conduit, or underground conductors in conduit. The supply end of any service raceway shall terminate within the enclosure at a location and in a manner specified by SCE.

The details of design for each service installation shall be approved by SCE prior to the start of construction. Contact the local Service Planning Office for details.

3.3 Pad-Mounted Transformer Locations

Transformer structures will normally be installed only in non-traffic areas. Transformer protection is required when Company equipment is exposed to traffic. This protection may be in the form of barriers, barricades, or curbs. A curb must have a minimum height of 6 inches and be at least 6 inches thick, and its front face located 60 inches minimum from the equipment foundation.

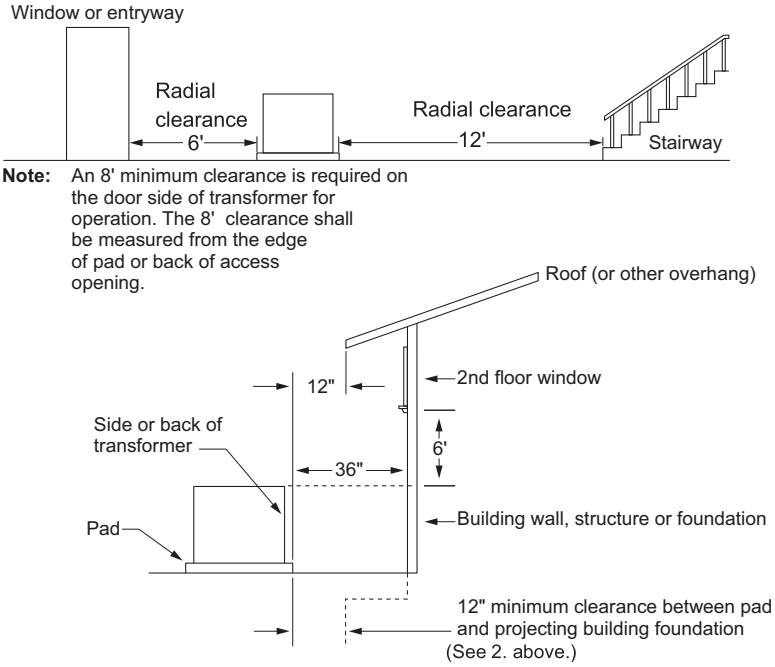

Note: An 8' minimum clearance is required on the door side of transformer for operation. The 8' clearance shall be measured from the edge of pad or back of access opening.

Note(s):
1. Distance from window or doorway to the edge of the pad shall be 6 feet.
2. Distance from edge of first step to the edge of pad shall be 12 feet.

4.0 Customer-Owned Transformer Vault Room COTVR

Prior to designing an indoor transformer room, see Table 4–1 for the preferred transformer locations. A pre-construction meeting is required with an SCE Inspector prior to start of construction. COTVR drawings shall meet SCE requirements. When Customer Owned Transformer Vault Rooms (COTVR) are designed or constructed without consideration to SCE requirements and or SCE was not contacted in advance, the Applicant / Customer shall be responsible for all modifications and their associated cost of complying with SCE requirements.

Indoor transformer room installations shall comply with the current requirements of:

1. The corresponding applicable Codes and Standards, including but not limited to the requirements of the CEC and NEC
2. The requirements of the Local Authorities Having Jurisdiction
3. SCE

Transformer rooms shall be a dry environment and located at/or below ground level of a building that are free from any potential flooding. Rooms located no more than one level below grade shall be completely contained within the building foundation and designed to prevent water intrusion.

Responsibilities of Applicant

Refer to ESR-9:Appendix B Customer -Owned Transformer Vault Room (COTVR) Reference.

Responsibilities of Southern California Edison

SCE shall provide and install the following materials per applicable tariffs:

- ☐ Primary cables and associated components
- ☐ Primary cable racks (as required by SCE) and associated components
- ☐ Secondary cables from the busway service head to the secondary side of the transformer
- ☐ Racking secondary cables from BART pad to the transformer room wall (as required by SCE). BART pads do not apply to newly constructed COTVRs.
- ☐ Apparatus equipment, for example, transformers and/or switches
- ☐ BART pad (as required by SCE). BART pads do not apply to newly constructed COTVRs.
- ☐ Padlock for door

SCE shall review and approve a preliminary red line drawing prior to the construction of the room. All structural drawings to include a California licensed Structural Engineers stamp and signature. Detail drawings to show equipment with clear path from entry way and method of installation as well as removal of equipment (e.g. hoist system, crane, etc.). SCE will not de-energize, relocate or go above other equipment to install or replace equipment. Drawings are based on switchgear pull section ratings, which dictates number of conduits and the concrete structure sizes (e.g. slab box, etc.). The number of conduits correlates with the underground structure size. Loading dictates cable and transformation. Drawings to show location of inserts. Coordinate with an SCE Inspector and Planner for direction.

Once the red line drawing is approved, SCE will return the final design and associated specification sheets to the Applicant for their use in the construction. It is the responsibility of the Applicant to notify SCE of any design or construction changes in a timely manner. SCE will review and approve these changes before the Applicant can proceed with the design or construction of the room.

The Applicant shall contact the SCE Planning Department prior to the construction of the transformer room. SCE will inspect the transformer room during construction to assure the proper installation and placement of various items, for example, pulling eyes, required to ensure a safe

working environment. SCE will not install equipment until the room is complete, the work area is clear of any debris, and all the requirements are met. SCE will accept and sign off the room before any equipment installation.

The room shall be large enough to accommodate all necessary equipment capable of supplying 100 percent of the required service capacity.

Any pipe or duct system that is not part of the electrical service installation shall not enter or pass through the transformer room. However, piping or other facilities provided for room transformer cooling and associated equipment shall be considered part of the electrical installation. Fire sprinklers, fire equipment, and fire suppression are not allowed inside the transformer room.

Surface-mounted rigid electrical conduits and receptacles are allowed provided they are approved by SCE and Local Authority Having Jurisdiction.

The equipment operating and clearance space requirements will dictate the minimum room dimensions. Consult the SCE Planning Department for equipment operating and clearance space requirements.

The Applicant shall furnish a grounding provision, in accordance with the NEC. Grounding installation must have the SCE Inspector on-site during construction.The Applicant shall install one of the following:

- **Preferred** — A minimum of two 5/8" × 8' ground rods (with four-inch exposed above finish floors). The two ground rods shall maintain a minimum of six feet separation, or install a ground rod at each end of the structure.
- **Alternate** — 4/0 insulated copper conductor encased in a two-inch minimum concrete dropped down for connection to two 5/8-inch copper clad ground rods where building is slab on grade.

SCE shall install 4/0 AWG bare cooper wire (minimum) ground/neutral bus encircling the transformer room. SCE shall connect the ground rods to the ground bus using #2 AWG strand bare copper.

The Applicant shall install GFCI receptacles.

The Applicant shall be responsible in providing the necessary provisions to comply with Federal, State, or Local requirements related to potential contamination.

Any service equipment and other related equipment owned by the Applicant, as well as any room, enclosure, or lifting facilities for the installation of transformers and associated equipment shall conform to applicable laws, codes, and ordinances of all Local Authorities Having Jurisdiction.

4.1 Walls, Ceilings, and Floor Requirements

Provide a 3-hour fire-rated concrete reinforced structure, including room walls, floor, and ceiling. Cover all exposed structural steel with three-hour fire-rated flameproof material. Intake and exhaust vents must have three-hour fire louvers. Contact the Local Authority Having Jurisdiction for any other design or construction requirements.

The Applicant shall provide for adequate natural ventilation or forced ventilation, as required by the Local Authority Having Jurisdiction and SCE. A minimum of two sets of 24"x24" openings for placement of ventilation louvers (one for intake and one for exhaust) is required. If the customer's Mechanical Engineer requires a larger area than the 24"x24" ventilation louvers, multiple 24"x24" louvers shall be used. No custom design ventilation systems are allowed. All mechanical drawings shall include a California licensed Mechanical Engineer's stamp and signature. Vents require 120V outlet within 2 feet of the vents with a GFCI outlet at each louver. Vent locations shall be provided on the drawing. Ventilation shall exhaust to the outside of the COTVR. Height of Vents shall be located 10

feet from floor to the bottom of the vent. Ventilation system shall not affect pedestrians or the public. The Customer's mechanical engineer shall determine the ventilation flow requirements. The customer shall provide the fire damper louvers and the screen. The blowers are provided and installed by SCE.

All anchorage/equipment support shall be in accordance with governing building code requirements.

The Applicant shall install coil inserts for pulling eyes in accordance with the requirements of the Underground Structures (UGS) manual, AC 720. Pulling irons are not allowed.

Design the structure into which the coil inserts are anchored to withstand the potential loadings induced into the structure through the coil inserts. Install the coil inserts for the pulling eyes 36 inches above the finished floor with four inches of clear space between the steel and wall surface. The pulling eyes shall be installed directly across the equipment door opening and conduit entrance. Coordinate with an SCE Inspector and Planner for direction.

The room shall support the total weight of SCE equipment plus 2,000 pounds. Room height shall be a minimum of 12 feet from the floor to the bottom of retracted hoist hook. Depending on equipment and required clearances, the room height may increase.

Space below the COTVR is considered an extension of the room that shall be protected from vehicular traffic (e.g. bollards).

All walls and ceilings of the transformer room shall be painted white.

See Figure 4–1 for Transformer Room Plan.

Figure 4–1: Transformer Room Plan View (Typical)

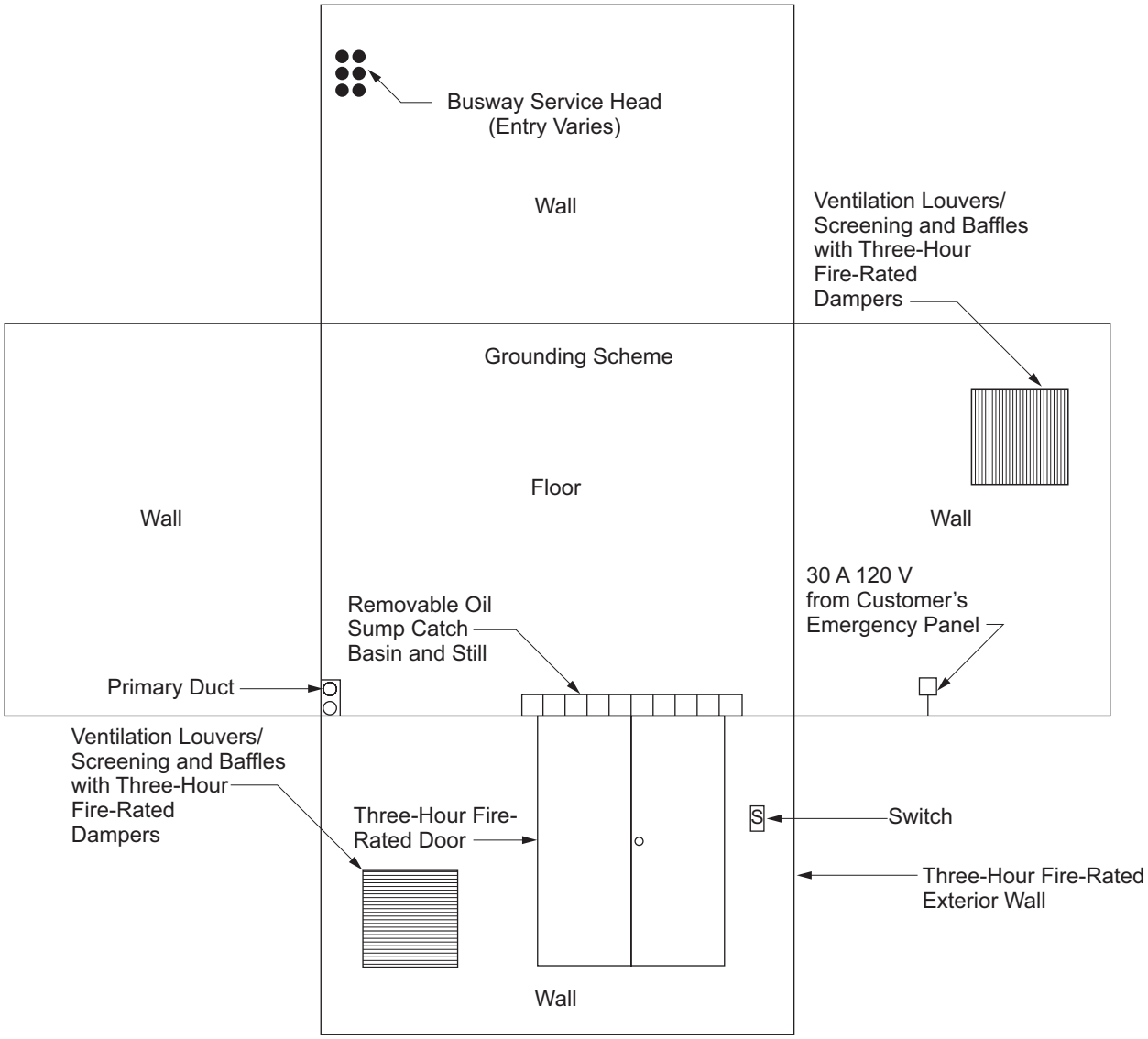

Note(s):

1. Customer shall provide a sump to contain any oil leaks from equipment.
2. Type of flooring shall be poured in place reinforced concrete. All structural drawings to include a California licensed Structural Engineer's stamp and signature.
3. A minimum of two sets of 24"x24" openings for placement of ventilation louvers (one for intake and one for exhaust) is required. If the customer's Mechanical Engineer requires a larger area than the 24"x24" ventilation louvers, multiple 24"x24" louvers shall be used Vents require 120V outlet within 2 feet of the vents with a GFCI outlet at each louver. Height of Vents shall be located 10 feet from floor to the bottom of the vent. Refer to section 4.1 for complete ventilation requirements.
4. Customer shall show location of the bus head with the height of 5' minimum & 6' maximum, to the bottom hole of the terminator. All working clearances shall be maintained.
5. Drawings shall be to scale and include a detail plan view, showing floor, ceiling, and walls. Concrete Masonry Unit (CMU) walls are not allowable for the construction of the COTVR.
6. Refer to ESR-9: Appendix B for COTVR Reference. Transformer Room Equipment and Personnel Access.
7. The Applicant shall provide the location of the required personnel door and the additional equipment doors on the drawings.

A. Equipment Access at and Below Grade Level

Equipment access at grade level is through a three-hour fire-rated equipment door accessible for 24-hours to authorized SCE personnel, for example, street, parking lot, driveway, or loading ramp/dock.

The equipment access path shall have an open air space (16 feet minimum vertical clearance) for boom truck access and shall be accessible to SCE trucks at all times. A clear access path must be maintained.

Equipment access below grade level is through the ceiling hatch that allow for the equipment to be lowered into the room (see Figure for details). The customer shall provide a removable three-hour fire approved concrete cover. Clearance over hatch shall be open and free of any overhangs. Transformers up to 500kVA shall have a hatch opening of 8 feet x 8 feet minimum. Anything above 500kVA shall be 8 feet x 10 feet. The customer is to provide a detailed plan/exhibit that is stamped by a California Licensed Structural Engineer.

Transformer Room Side View Equipment Access Opening below Grade Level

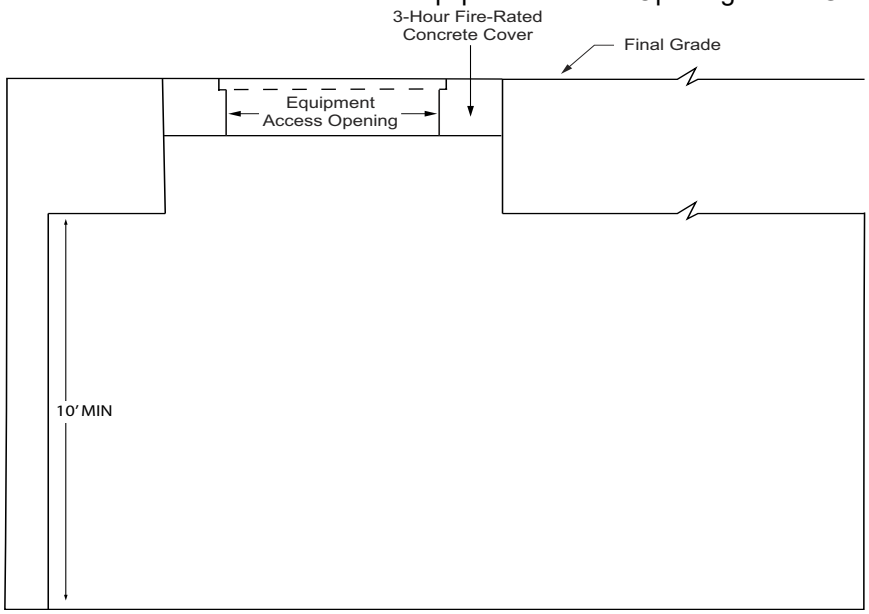

Note(s):

1. Equipment size shall determine minimum access opening. Contact the Local Planning Department for specifications of apparatus equipment size and dimensions.
2. For newly constructed COTVRs, Capacitors, BURD transformers and BART Pads are not allowed.

Transformer installations at locations requiring special lifting equipment (where forklift or crane accessibility are not available) to install or remove SCE equipment on the customer's premises will require the Applicant to provide such lifting equipment at their own expense. The special lifting equipment shall be able to lift the maximum equipment weight provided by SCE.

The Applicant shall do the following:

- ☐ Furnish, install, own, and maintain permanent lifting equipment or,
- ☐ Provide (or pay for) portable lifting equipment acceptable to SCE for installing or removing the transformers and associated equipment.

- ☐ Provide type of mechanical hoist system, with dimensions and the manufacturers specifications, on COTVR drawing. Hoist system selected will affect the height of the room.

B. Personnel Access Door (Man Door) and Equipment Doors

The Applicant shall provide location of equipment doors and personnel door on the drawings. Equipment door opening shall accommodate two 4' wide x 10' height doors. Doors shall maintain a 3-hour fire rating. All doors shall swing outwardly and be equipped with panic bar hardware. Roll-up doors are not allowed. Installation of door sill requires rubber gasket and shall be removable. The equipment door will have a heavy hasp; SCE supplies the padlock.

4.2 Primary Cable and Conduits

SCE will determine the size and number of primary conduits.

For safety purposes and for cable protection, the cables shall not be on the floor. Incoming primary conduit to comply with SCE standards.

4.3 Secondary Cable Configuration

For safety purposes and for cable protection the cables shall not be on the floor. Secondary Cable trench is required. Primary & secondary need their separate cable trench.

5.0 Subsurface Transformers in a Subsurface Enclosure

The Applicant shall furnish and install subsurface enclosures when subsurface transformers are used, on public property or public rights-of-way or otherwise requested by governing agencies, at the Applicant's expense. Consult the local Service Planning Office for enclosure specifications and all installation details.

6.0 Transformers on Pole-Type Structures

In cases where installations of SCE's transformers are on a pole-type structure(s), SCE can erect such structures. Service from this structure(s) will be supplied in accordance with SCE's rules governing overhead or underground service connections and the following requirements:

- For overhead service, locate the pole-type structure(s) no more than 12 feet from the point-of-service attachment on the customer's building or structure. SCE will designate this location.
- The maximum service capacity from a pole-type structure(s) shall be limited to 500 kVA for each riser on the pole.

This page intentionally left blank.

ESR–5: Meters — EXO Installations

TABLE OF CONTENTS

SECTIONS AND SUBSECTIONS		PAGE
1.0	Single-Phase and Three-Phase Meters and Metering Equipment	5–5
2.0	Meter Sockets	5–5
3.0	Meter Switch	5–6
3.1	Number of Switches	5–7
3.2	Sequence	5–7
4.0	Main Service Disconnect — Multiple Metering	5–7
4.1	Meter Disconnects	5–7
4.2	Locking Provisions	5–7
4.3	Fused Disconnects	5–7
5.0	Metering Equipment Installations	5–8
6.0	Meter Locations	5–8
7.0	Residential Occupancies	5–11
7.1	Individually Metered 120/240 V Services	5–11
7.2	Individually Metered 120/208 V, Three-Wire Services	5–11
8.0	High-Rise, Multiple-Occupancy Residential Buildings	5–12
8.1	Point-of-Delivery	5–12
8.2	Access	5–13
8.3	Meter Room Specifications	5–14
8.4	Utility Termination Compartment Labeling	5–14
8.5	Field Engineering	5–15
8.6	Approval	5–15
9.0	Commercial and Industrial Occupancies	5–15
9.1	Single-Phase Service 120/240 V	5–15
9.2	Three-Phase Services 120/208 V, 240 V, 120/240 V, and 277/480 V	5–15
9.3	Meter Switch Larger than 125 A on a 100 A Safety Socket Box	5–16
9.4	Meter Sockets — Self-Contained — Non-Residential	5–16
9.5	Agricultural Power Service	5–17
10.0	Factory-Wired Safety Socket Boxes	5–21
10.1	Overhead Service	5–22
10.2	Underground Service	5–22
10.3	Underground Service to Equipment Cabinets or Enclosures	5–22
11.0	Current-Transformer Cabinet and Meter-Socket Panel	5–27

SECTIONS AND SUBSECTIONS **PAGE**

12.0 Grounding and Bonding 5–34
12.1 Requirements for Various Serving Voltages 5–34
12.2 Electrical Service Grounding and Bonding Diagrams 5–35

FIGURES

5–1 Typical Plaque/Directory Specifications 5–6
5–2 Typical High-Rise, Multiple-Occupancy Residential Building 5–13
5–3 Meter Socket — Terminal Arrangements 5–18
5–4 Separation of Meter Assemblies for Electric and Gas Services 5–19
5–5 Workspace — Surface-Mounted or Semi-Flush Meter Installation 5–20
5–6 Minimum Enclosed Meter Clearances — 0–600 V 5–20
5–7 Meter Switches and Main Disconnects 5–21
5–8 Safety Socket Box with Factory-Installed Test-Bypass Facilities — 100 A 5–23
5–9 Safety Socket Box with Factory-Installed Test-Bypass Facilities — 200 A 5–24
5–10 Test-Bypass/Disconnect Block for Safety Sockets — 100 A and 200 A — 0–600 V 5–25
5–11 Test-Bypass/Disconnect Block for Safety Sockets — 100 A and 200 A — 0–600 V (Bussed and/or Cable Terminations) 5–26
5–12 Safety Socket Box for Meters Used with Instrument Transformers 5–27
5–13 Combination Current-Transformer Cabinet and Meter-Socket Panel for Overhead Service — 400 A Maximum 5–29
5–14 Combination Current-Transformer Cabinet and Meter-Socket Panel for Underground Service —800 A Maximum 5–30
5–15 Current–Transformer Mounting Base Three-Phase, Four-Wire Services — 0–600 V Through 400 A Maximum 5–31
5–16 Current–Transformer Mounting Base Single or Three-Phase, Three-Wire Services — 0–600 V Through 400 A Maximum 5–32
5–17 Single-Phase and Three-Phase Meters and Metering Equipment EXO Current-Transformer Installation Meter Spacing and Clearances 5–33
5–18 Combination Meter and Service Section for Overhead Dwelling Service 5–36
5–19 Meter Remote from Service Section for Overhead Dwelling Service 5–37
5–20 Meter and Service with Current-Transformer Enclosure Overhead Supply 5–38
5–21 Single-Meter Commercial Service with a Neutral (Where a Main-Disconnecting Means Is Required) 5–39
5–22 Three-Phase, Three-Wire Delta Service with Added Grounding Connector 5–40
5–23 Commercial Service, Overhead Supply — Six Subdivisions or Less 5–41
5–24 Commercial Service, Overhead Supply — More than Six Subdivisions of Service 5–42
5–25 Combination Meter and Service for Underground Dwelling Service 5–43
5–26 Combination Meter and Service for Underground Multi-Family Dwelling Service — Six Subdivisions of Service or Less 5–44

FIGURES **PAGE**

5–27 Combination Meter and Service for Underground Multi-Family Dwelling Service — More than Six Subdivisions 5–45

5–28 Combination Meter and Service for Underground Commercial Service — Six Subdivisions or Less 5–46

5–29 Combination Meter and Service for Underground Commercial Service — More than Six Subdivisions of Service 5–47

5–30 Switchboard Service Section 5–48

5–31 Underground Service Post 5–49

5–32 Concrete-Encased Electrode (Ufer Ground) 5–50

5–33 Typical Single-Phase Customer's Transformer Bonding and Grounding 5–51

5–34 Typical Three-Phase — Four-Wire Wye — Customer's Transformer Bonding and Grounding 5–52

5–35 Typical Three-Phase — Four Wire Delta — Customer's Transformer Bonding and Grounding 5–53

5–36 High-Impedance Grounded Neutral System (NEC Section 250.36) 5–54

TABLES

5–1 Meter Location per Type of Occupancy 5–9

5–2 Prohibited Metering and Service Equipment Locations 5–10

5–3 Sequence for Meter Room Locations and Metering Facilities 5–14

5–4 Self-Contained and Current-Transformer Meter-Socket Terminal Arrangements 5–18

This page intentionally left blank.

ESR–5: Meters — EXO Installations

1.0 Single-Phase and Three-Phase Meters and Metering Equipment

All Externally Operated (EXO) meter installations shall comply with the Electrical Service Requirements of the Company, along with the rules and regulations of electrical inspection authorities having jurisdiction, and with all applicable governing laws and ordinances.

If any question arises concerning these requirements, contact a local Service Planning Office. See Table 5–1 for the addresses and phone numbers of these offices.

Whenever any electrical service wiring is installed, provisions shall be made for the installation of metering equipment complying with these requirements. Existing service equipment, that in the opinion of the Company is satisfactory and adequate for the application, may be reused.

Meters will be installed by the Company when the necessary metering facilities are provided, the installation has been approved for service by the local electrical inspection authorities, and an address has been assigned by the AHJ/City or County Planning Department. Meters will not be installed on any installation that does not meet the requirements of the Company or which is considered hazardous.

Unauthorized persons are prohibited from altering or changing, in any way, a meter or its connections. All enclosures and raceways on the line side (unmetered) or housing metering equipment shall be sealable. Meter seals shall not be broken by anyone except an authorized Company employee.

Service equipment exposed to the weather shall be National Electrical Manufacturing Association (NEMA)—3R, rain-tight.

For the purpose of these specific requirements, a customer installing their own wiring will be considered the electrical contractor.

For the purpose of these requirements, when one meter registers the current supplied to more than one single-family residential occupancy, it shall be considered a commercial installation.

See Section 12.0 through Figure 5–36 for bonding and grounding requirements.

2.0 Meter Sockets

Every new service installation shall be equipped with an approved meter socket and sealing ring together with its supporting raceway or box where these are required. These items shall be furnished and installed by the electrical contractor.

All meter fittings shall be mounted on a substantial support in a true vertical position.

When meters are in place, meter-socket terminals shall be inaccessible and meter-mounting panels shall be nonremovable.

Where a self-contained “A” base meter is in place, and the meter is relocated on the same building or an increase in load requires the installation of larger service conductors or a larger raceway, a new meter panel or switchboard shall be installed.

Meter sockets equipped with circuit-closing devices shall not be installed. Ringless-type meter socket enclosures shall not be installed. Any such equipment installed shall be replaced at the customer’s expense, prior to the Company providing service.

See Table 5–4 and Figure 5–3 for meter socket terminal arrangements.

All new sockets for self-contained metering applications shall be listed by a recognized testing laboratory, for example, Underwriters Laboratories, Inc. (UL), Canadian Standards Association (CSA), and so forth. Residential meter panels may have a maximum ampere rating of 125 A, 225 A, or 400 A (see ESR–3). Factory-wired safety socket boxes shall have maximum continuous duty ratings of 100 A or 200 A. See ESR–3, Figure 5–8 and Figure 5–9 for factory-wired safety socket box requirements.

When a service installation does not serve an entire building, the installation shall be permanently marked by the contractor to indicate the portion of the premises served (see Figure 5–1).

See ESR–6 for details of meter-socket panel installations in switchboard service sections.

Figure 5–1: Typical Plaque/Directory Specifications

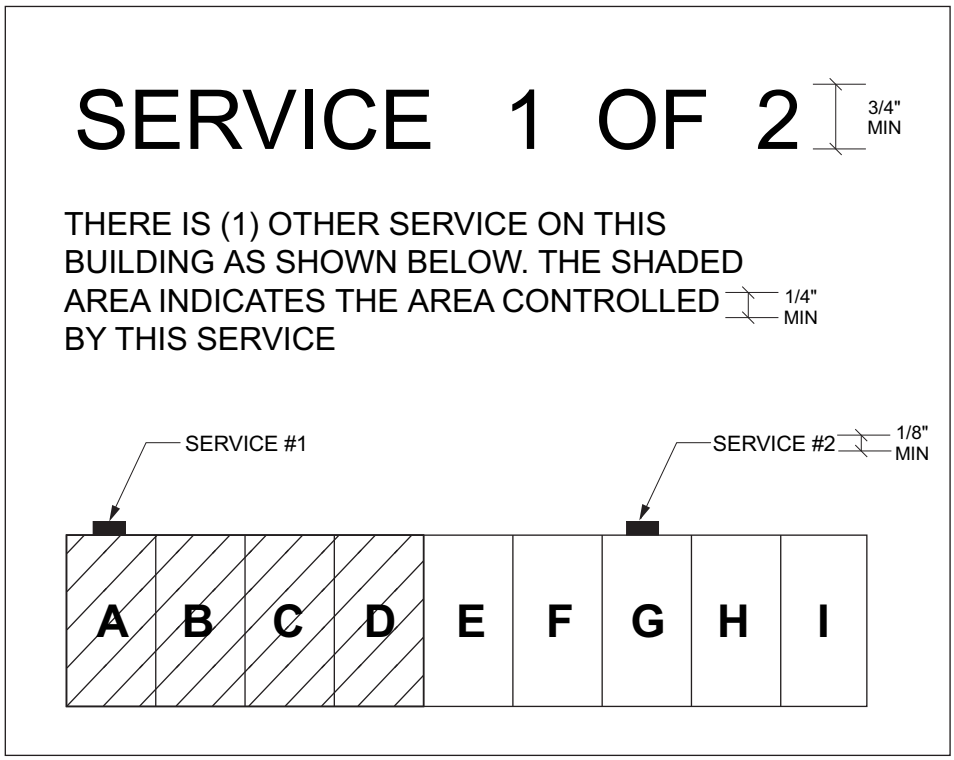

Note(s):

1. The plaque or directory required shall be metal or plastic, with engraved or machine-printed letters, or electrophoto plating, in contrasting color to the plaque. The plaque shall include a plate map of the entire building and shall be attached to the service disconnect with POP® rivets, screws, or epoxy.

3.0 Meter Switch

For each and every meter, the contractor shall furnish and install a switch, or other approved disconnecting means with overcurrent protection. This is referred to as the “Meter Switch." It shall be installed at the same location and directly adjacent to the metering and service equipment. The meter switch shall control all of, and only, the energy registered by that meter. Where permitted by local code or ordinances, the meter switch may consist of a group of switches or breakers per National Electric Code (NEC) 230-71. A separate meter switch will be required for each separate service of any group where the loads are totalized by a single meter.

3.1 Number of Switches

Every meter or service shall be furnished with a meter switch as described in Section 3.0. The NEC allows up to a maximum of six switches or disconnects to constitute the main overcurrent device for a single commercial or industrial service. A residential service may have a maximum of two switches or disconnects for each single-family service.

3.2 Sequence

Every meter switch installed on an individual service less than 600 V shall be on the load side of the meter or metering equipment. For service over 600 V, see ESR–7.

4.0 Main Service Disconnect — Multiple Metering

A main disconnect may be installed on the line side of groups of two-to-six meter sockets, safety socket boxes, instrument-transformer boxes, or switchboards where each meter has a single meter switch.

A main disconnect shall be installed on the line side of a group of more than six meter sockets, safety socket boxes, instrument-transformer boxes, or switchboards. A main disconnect shall be installed in all remote meter rooms.

A main disconnect shall be installed on the line side of groups of two-to-six meter sockets, safety socket boxes, instrument-transformer boxes, or switchboards where groups of switches, circuit breakers, or disconnects that constitute the meter switch, and the total number of switches or disconnects exceeds six.[1/]

The main disconnect may be a fused switch or a circuit breaker. Where fuses are installed, the Company is not responsible for their replacement. Main disconnect enclosures containing unmetered conductors shall be sealable.

4.1 Meter Disconnects

Meter disconnects supplied from instrument-transformer and self-contained compartments shall be capable of being locked in the open (OFF) position.

4.2 Locking Provisions

Locking provisions may be:

A. A lockout device that is incorporated as an integral part of each meter disconnect

B. A lockable cover for each meter disconnect where the lock prevents the operation of the disconnect and prevents removal of the cover

C. A lockable cover for multiple meter disconnects where the lock prevents the operation of any of the disconnects, prevents removal of the cover, and all disconnects are supplied from a single instrument-transformer compartment

4.3 Fused Disconnects

Items (A), (B), and (C) above shall be permitted to be accomplished by a maximum of two locking provisions per disconnect. For fused disconnects, the fuse access cover shall be lockable when the disconnect is locked in the off (OPEN) position. All locking provisions for

[1/] In all installations listed above, the service disconnect shall be installed at the same location and directly adjacent to the meter and service equipment.

disconnects rated less than 400 A shall accept a lock shank of not less than 1/4 inch. All locking provisions for disconnects rated 400 A and above shall accept a lock shank of not less than 5/16 inch.

5.0 Metering Equipment Installations

The centerline of any meter socket shall not be more than 6'-3" or less than 4 feet above the standing and working surface. The only exception to the maximum and minimum meter heights that is the minimum height of a meter may be reduced to 3 feet when the meter has been enclosed in a meter room, multiple-meter closet, or commercial meter pedestal. Mobile home service pedestals may be reduced to 3 feet in height above the standing and working surface. Also, where local ordinance dictates a maximum height requirement for equipment located in franchise areas and the minimum meter height of 4 feet cannot be attained, the minimum meter height may be reduced to 3 feet for an exposed meter when a safety socket box with factory-installed test-bypass facilities is mounted and secured to the outside of an enclosure or cabinet (traffic controller, fiber optics, or wireless equipment enclosures).

The minimum meter clearance and work space permitted between other meters and sidewalls, ceilings, tops, bottoms, and other obstructions shall be as illustrated in Figure 5–4 and Figure 5–5.

The minimum inside dimension depth of any closet or enclosure for single-phase residential meters shall be 7 inches from the face of the meter panel. The minimum inside dimension depth of any enclosure for all other meters shall be 11 inches from the face of the meter panel. The maximum inside dimension depth of recess for all meters shall be 12 inches from the face of the meter panel. See illustrations in Figure 5–6.

A level standing and working surface that is entirely on the property served, must be clear and unobstructed, at least equal to the width and height of the meter space (but not less than 36 inches wide and 6'-6" high) and extending at least 36 inches from the meter mounting surface. It shall also be provided when meters are enclosed in a cabinet or enclosure. The clear space shall extend at least 36 inches from the outer face of the cabinet or enclosure (see illustrations in Figure 5–5).

6.0 Meter Locations

All metering facilities shall be located to provide 24-hour access, and preferably be on the exterior building wall.

The local Service Planning Office shall be contacted to approve the location prior to the installation of meter/service equipment. Any service equipment that has been installed without prior Company approval shall be modified or relocated at the customer’s/contractor’s expense.

Where it is determined that all current and future metering facilities are to be installed on an exterior wall, and adequate wall space in an approved location is not available, the builder or architect shall provide a meter closet or illuminated meter room with approved exterior access (roll-up doors are not acceptable) in which all of the required meter and service facilities may be properly installed. When meters or metering equipment are installed in a lockable enclosure, a lock-box (provided and installed by the Company) shall be permanently secured to the outer surface of the enclosure/door in a permanently accessible location. The customer shall provide a key for the meter enclosure/room door, to the local Service Planning Office prior to delivery of service. This key is to be housed in the lock-box for future utility access.

For all single- and three-phase self-contained meter installations with individual meter switches rated 200 A and below, serving any single- or multiple-occupancy building (including condominiums in common tenancy and townhouses developed with common areas), the meter and service equipment shall be grouped in one readily accessible central location. When existing

meter and service equipment have been established for a building, additional meter and service equipment shall be located with its existing equipment. Consult the Service Planning Office for assistance in determining acceptable meter and service locations.

For townhouse developments where commonly-owned property is not available, individual services may be provided to each townhouse unit.

For any single- or multiple-occupancy building, when the individual meter switch exceeds 200 A, consult with the local Service Planning Office for acceptable service equipment and meter locations.

No meter or service equipment shall be installed within any individual residential occupancy, in any type of single- or multiple-occupancy building; within any individual commercial occupancy that it does not serve; or in any location prohibited as identified in Table 5–3.

Table 5–1 identifies the type of occupancy for meter installations.

Table 5–1: Meter Location per Type of Occupancy

Item No.	Description
1.	**Dwellings or Apartments** — Meter and service equipment shall be installed on an exterior wall or exterior meter closet and so located that the meter and service equipment will be accessible without entering the building. Meter locations shall be selected so that 24-hour access is provided, or as otherwise agreed to by SCE and future building or other structural changes; for instance, fences, patio enclosures, and so on, are not to make the metering facilities inaccessible.
2.	**Single-Story Buildings** — Meter and service equipment may be installed inside a building when located in an illuminated meter room directly accessible from the outside and readily accessible 24-hours a day or as otherwise agreed to by SCE.
3.	**Multi-Story Buildings** (other than dwellings or apartments) — Meter and service equipment shall be installed as required for single-story buildings.
4.	**High-Rise, Multiple-Occupancy, Residential Buildings** — SCE may establish more than one meter room location for groups of individual metering facilities for buildings seven stories or taller. See Table 5–3 for sequence of meter room locations and metering facilities. All meter room locations shall have 24-hour access to metering facilities.

METER ACCESS

Access shall be through a door (roll-up doors are not acceptable) on the building exterior, opening directly into the electric meter room that provides 24-hour access.

Characteristics of a building design could restrict meter location options. An order of preference shall be used to evaluate and approve meter/metering equipment access. This order of preference is to provide direction for Planners and Design Service Representatives in determining meter/metering equipment location.

Metering facilities and related service equipment are preferred to be located on the exterior of buildings and/or structures to provide immediate access.

If exterior locations become unavailable, then customers may install metering facilities inside a meter closet recessed within the exterior structure wall and accessible from the exterior.

The customer may install metering facilities inside a building or structure within an approved meter room. This meter room and location must be approved by the Company in advance of construction. The customer shall provide an access door on the building exterior that allows access directly into the meter room. A Company-provided lock-box will be provided to allow Company access directly into the meter room.

If an access door directly into the meter room is not provided, then immediate and non-hazardous access to the meter room shall be required through entrances and areas used during normal business hours. In addition, an exterior door in close proximity to the meter room location shall

also be required for installation, replacement, and maintenance of utility service-entrance cables and equipment. A local telephone number shall also be readily posted for emergency access during nonbusiness hours to electrical service equipment located within a meter room without direct exterior door access.

In certain cases, the customer may be required by the NEC to provide two entrances into a meter room. This is a code issue between the customer and the local authorities having jurisdiction.

When meter access problems result due to metering equipment being improperly located, and the Company had not approved the location, the customer at their expense will be responsible for all modifications.

If, at any time, the Company determines a meter access problem exists, or may exist due to fences, building additions, shrubbery, dogs, hazardous materials, and so on, the customer at their expense shall relocate the metering facilities to a new location acceptable to the Company.

For single-family dwellings only, an acceptable remote meter reading device may be installed. Installation of this device(s) will be made by the Company. This option is available for 100 A and 200 A residential services only.

Table 5–2: Prohibited Metering and Service Equipment Locations

Table Note: The local Service Planning Office shall be contacted prior to the installation of any meter/service equipment. Any service equipment that has been installed without prior Company approval shall be modified or relocated at the customer's/contractor's expense. No metering or service equipment shall be located in any of the places listed below.

Item No.	Location to Avoid
1.	Any place where moisture, fumes, or dust may interfere with their operation or cause damage. The metering equipment may be enclosed to prevent any such result. Contact the local Service Planning Office for specific details.
2.	Any elevator shaft or hatchway
3.	Any room containing elevator equipment
4.	Any substation or transformer vault, unless such metering equipment is in an enclosure that is effectively barriered from the high-voltage compartment and contains no bare or exposed live parts
5.	Behind any switchboard having bare or exposed live parts, unless such meter is located at least 5 feet from such parts and is effectively barriered therefrom
6.	Any projection room
7.	Any hazardous location or locations where employees would need to pass through a hazardous area to gain access to metering or service equipment
8.	Attic or any place not in general use
9.	Show window or behind a sales counter
10.	Rest, shower, bath, or toilet room
11.	Directly over any door, window, stairway, ramp, step, or stairs
12.	Directly over or 18 inches horizontally from a gas meter or plumbing fixture that extends more than 6 inches out from the wall (see Figure 5–4).
13.	Mechanical or other type of room or structure that contains motors, valves, or any piping that is under pressure
14.	Balcony, mezzanine floor, or other elevated location (unless approved by the Company)[a/]
15.	Any underground vault or other depressed location (unless approved by the Company)[a/]
16.	On any surface subject to excessive vibration as determined by the Company
17.	Garage, carport, breezeway, or patio that is enclosed
18.	On, or recessed in, any wall in a school building accessible to student traffic; also, meters are not permitted in school hallways
19.	On, or recessed in, any wall or structure with less than 3 feet of clear level work space in front of the metering equipment or its enclosure(s). **Note:** This space shall not be impeded by property lines, public thoroughfares, alleys, driveways or walks.

Table 5–2: Prohibited Metering and Service Equipment Locations *(Continued)*

Table Note: The local Service Planning Office shall be contacted prior to the installation of any meter/service equipment. Any service equipment that has been installed without prior Company approval shall be modified or relocated at the customer's/contractor's expense. No metering or service equipment shall be located in any of the places listed below.

Item No.	Location to Avoid
20.	Inside any building, unless located within an acceptable meter room that has 24-hour access. A chain-link fence is not acceptable as a separating meter room wall.
21.	Any location not readily accessible 24 hours a day for meter reading, maintenance, or replacement of the metering/service facilities
22.	Any area protected by alarm systems, security gates/doors, guard dogs, and so on, unless approved by the Company
23.	On mobile homes or trailers[b/] Exceptions: a. Temporary mobile school buildings b. Residential mobile homes: • Located on an individual private lot (not mobile home parks) • Where units are a minimum of 10 feet wide • Where units installed on a permanent foundation system defined by California Code of Regulations Title 25 as: *"A foundation system is an assembly of materials constructed below, or partly below grade, not intended to be removed from its installation site, which is designed to support the mobile home and engineered to resist the imposition of external natural forces."* A State HUD Form 433 (A) must be submitted to the Company as proof of compliance with these requirements. **Note:** Only underground service will be provided.
24.	Within the fenced portion of a freeway
25.	On Company poles, either jointly or solely owned, except for: a) city agencies with Company approval; b) in locations where employees would need to pass through hazardous areas to gain access to metering or service equipment; or c) communication companies requiring 1Ø metered service and approved by Installation Management Services. (See DOH SL 520, Note 4)

a/ These locations must be accessible by a stairway of normal tread and rise. A stairway of normal rise (4 inches to 7 inches) and run (11-inch minimum), and conforming to building code requirements, is acceptable. Entrance to the location shall be through a vertical doorway not less than 36 inches wide and 78 inches high or through an access way approved by the Company.

b/ These requirements do not apply to modular/factory-built homes. These types of structures will be served the same as any framed (stick-built) home.

7.0 Residential Occupancies

See Table 5–4 and Figure 5–3 for meter socket terminal requirements.

Multi-family occupancies that are not individually metered shall be serviced in accordance with the requirements for commercial and industrial occupancies.

7.1 Individually Metered 120/240 V Services

When a meter switch does not exceed 125 A, a 125-maximum-ampere-rated, four-terminal socket shall be installed.

When a meter switch exceeds 125 A, but does not exceed 225 A, a 225-maximum-ampere rated, four-terminal socket shall be installed.

When a meter switch exceeds 225 A, but does not exceed 400 A, a self-contained panel shall be installed (see ESR–3). If the meter switch exceeds 400 A, a switchboard shall be installed (see ESR–6).

120 V, two-wire services are limited to a maximum load of one 15 A and one 20 A circuit.

7.2 Individually Metered 120/208 V, Three-Wire Services

For a 120/208 V, three-wire service, when the meter switch does not exceed 125 A, a 125 A maximum-rated, five-terminal socket shall be installed.

When a meter switch exceeds 125 A, but does not exceed 200 A, a 200 A continuous-duty-rated, five-terminal socket shall be installed, and a 120/208 V, three-wire service shall be supplied. Test bypass blocks will not be required for individually-metered residential occupancies.

If the meter switch exceeds 200 A, a switchboard for three-phase, four-wire service shall be installed (see ESR–6).

8.0 High-Rise, Multiple-Occupancy Residential Buildings

Meter and service-related equipment is typically located at one central location that provides 24-hour access. For multiple-occupancy, residential buildings having seven or more floors above grade level, SCE may establish more than one meter room location for groups of individual metering facilities. This type of building may consist of a mix of commercial (for example, small retail and/or restaurants) and residential loads.

8.1 Point-of-Delivery

The SCE service point-of-delivery shall terminate at grade-level or first-level basement/parking to an underground terminating pull section and main service disconnect.

A. Grade Level

The underground terminating pull section and main service disconnect shall be located on the exterior building wall or inside the building within an approved meter room. This meter room and location must be approved by SCE in advance of construction. The customer shall provide an access door on the building exterior that allows access directly into the meter room. An SCE-provided lock-box will be provided to allow company access directly into the meter room at grade level.

B. First Level Basement/Parking

The underground terminating pull section and metering facilities shall be located within an approved meter room. This meter room and location must be approved by SCE prior to construction. The interior meter room shall be located against the exterior wall of the building adjacent to where the SCE-owned transformer serving this site is located.

Where the underground terminating pull section is installed at a level lower than that of the service conduits, a Drip Loop pull section shall be installed as an addition to the underground termination section. This additional section will be used for a cable drip loop to mitigate potential water intrusion into the terminating section. Both ends of all conduits shall be sealed to prevent moisture from entering the termination enclosure/section. At no time may service-lateral conduit(s) terminate above the service entrance bus. Adequate drainage in the meter room shall be provided and maintained by the customer to eliminate pooling of water within the 3 feet of working/clearance space in front of switchboards. See ESR–3, Figure 3–2 for working space requirements.

The bus duct, or conduits and feeders beyond SCE point-of-delivery within the building shall be the customer's responsibility to install, own and maintain. The bus duct tap access shall be sealable with sealing screws or when cable in conduit is used, cable shall be pulled straight through without intermediate pull sections. The customer's ownership of the system must meet the requirements of the local code enforcement agency having jurisdiction.

Southern California Edison shall calculate the voltage drop up to the point-of-delivery and will be responsible for maintaining customer service voltage consistent with Rule 2 at the underground terminating pull section.

Figure 5–2: Typical High-Rise, Multiple-Occupancy Residential Building

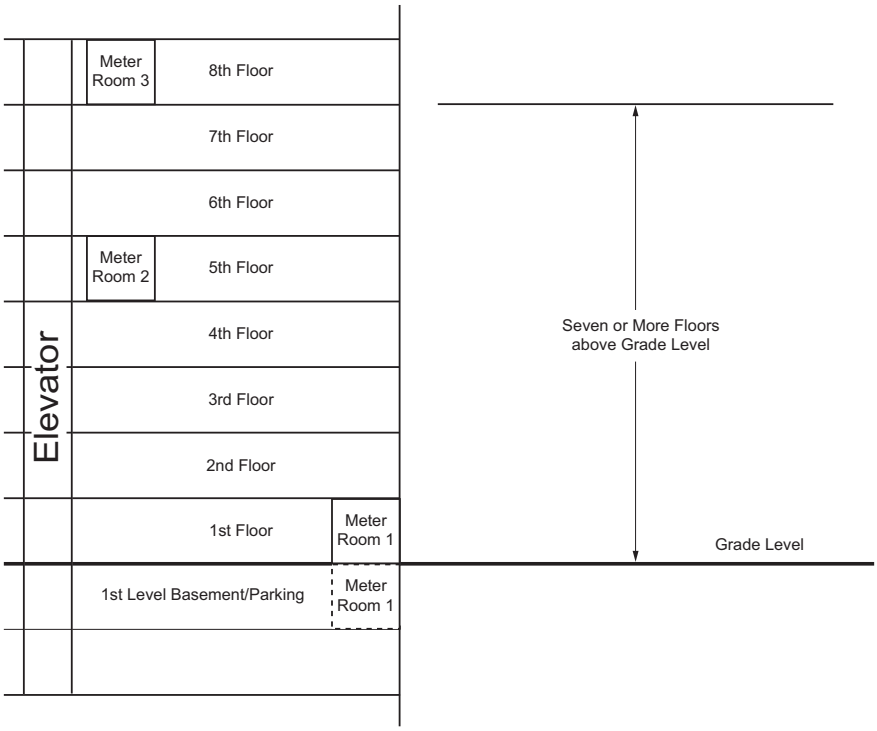

Note(s):

1. Where there are multiple grade entrances into a high-rise building, SCE will determine if it meets the requirements for the high-rise, multiple-occupancy residential building.

8.2 Access

The customer shall provide 24-hour access to all metering facilities. Access to each meter room shall be through a door that is clearly identified with a placard that states “SCE METER ROOM.” Two (2) keys and/or key cards that allow access to all stairway access points and meter room locations in the high-rise building shall be provided to the Service Planning Office prior to delivery of service. If the high-rise building is a secured building, access shall be provided to SCE employees, or designated representatives, upon showing proper identification to the Security or Management Office.

A lock-box (provided and installed by SCE) shall be permanently secured to the outer surface next to the keyed access panel providing entrance to the parking level within the high-rise building. A reserved utility/maintenance parking space shall be provided adjacent to the meter room at that level or elevator. The customer shall provide a key to access the parking level prior to delivery of service. This key is to be housed inside the lock-box for utility access.

8.3 Meter Room Specifications

A meter room is an accessible, illuminated, and ventilated room that provides a means to permit circulation of air sufficient to remove an excess of heat, fumes, or vapors. The room is provided by the customer for the exclusive use of the customer's electric service, metering equipment, and communication equipment as long as space requirements for the electric installation are not impaired.

Elevators and stairways shall be adjacent or within 100 feet of all meter room locations. Stairways shall remain functional during an emergency. Access to the meter room shall be through a door that swings outward and has a doorstop mechanism to keep the door open. Panic-bar hardware shall be used in all meter room locations to allow the door to be opened hands-free from the inside.

A 1-1/2–inch minimum conduit shall be installed from meter room to meter room to the roof level, and capped for future transmitting antenna. In each meter room, location shall have a 12" × 12" × 6" minimum pull box located directly adjacent to the multi-metering facilities. Where the conduit is capped at the roof, there should be a 360-degree unobstructed area accessible to SCE employees. A 3/4-inch galvanized ridged conduit (nipple) with a threaded cap shall be installed through the electrical room exterior wall. The minimum height of the conduit shall be 10 feet above grade.

Each meter room shall have emergency lighting, house telephone linked to a manned location (for example, security or management office) and an information plaque placed at eye level on the inside of the meter room door with the following information:

- ☐ 24-hour emergency contact telephone number
- ☐ Total number of meters for that particular location
- ☐ Floor number and nearest elevator of all other meter room locations
- ☐ Map showing:
  - — Present location
  - — Exits (elevators and stairs) from present location to the outside of the building
  - — All meter rooms in relationship to the elevators
  - — Location of main and sub-main disconnect switches

Table 5–3: Sequence for Meter Room Locations and Metering Facilities

Locations	Metering Facilities
First floor or first level basement/parking	Underground terminating pull section, main-service disconnect, house meter, fire pump meter grouped for first, second and third floors.
Fifth floor	Meters for fourth, fifth and sixth floors.
Eighth floor	Meters for seventh, eighth and ninth floors.
Eleventh floor	Meters for tenth, eleventh and twelfth floors.

Note(s):
1. Provide one meter room per selected floor or level.

8.4 Utility Termination Compartment Labeling

The utility termination section, pull section or pull box in all high-rise service installations shall be labeled by the customer. Labeling shall be required regardless of a utility termination point located below grade, at grade, or on the building exterior. Labeling shall consist of machine-engraved laminated phenolic (or equivalent) tag. The tag shall have

one-quarter of an inch white letters on **red-colored material** which is readily visible and mechanically attached to the face of the utility termination compartment. The compartment label shall be worded as: UTILITY SERVICE TERMINATION COMPARTMENT.

8.5 Field Engineering

The Planner shall have Field Engineering review the high-rise residential building project plans to ensure the grounding electrode is appropriately placed and other engineering-related issues are resolved at the earliest engineering phase of the project.

8.6 Approval

The local Service Planning Office shall be contacted to approve the high-rise, multiple-occupancy residential building and meter room locations. The approval shall come from the Planning Supervisor prior to the installation of meters/service equipment. Any service equipment that has been installed without prior SCE approval shall be modified or relocated at the customer's/contractor's expense as necessary to meet requirements for service.

9.0 Commercial and Industrial Occupancies

Safety socket box applications and details can be found in Section 10.0 through Figure 5–18. See Table 5–4 and Figure 5–3 for meter-socket terminal requirements.

9.1 Single-Phase Service 120/240 V

When a meter switch does not exceed 125 A, a factory-wired, safety-socket panel with a maximum 125 A continuous-duty rated, four-terminal socket shall be installed.

When a meter switch exceeds 125 A, but does not exceed 200 A, a factory-wired safety socket box with a 200 A continuous-duty-rated, four-terminal socket shall be installed.

When a meter switch exceeds 200 A, a switchboard shall be installed (see ESR–6).

9.2 Three-Phase Services 120/208 V, 240 V, 120/240 V, and 277/480 V

When a meter switch does not exceed 125 A, a factory-wired safety socket box with a maximum 125 A continuous-duty-rated socket shall be installed.

When a meter switch exceeds 125 A, but does not exceed 200 A, a factory-wired, safety socket box with a 200 A continuous-duty-rated socket shall be installed.

When a meter switch exceeds 200 A, a switchboard shall be installed (see ESR–6).

Sockets for 120/208 V and 277/480 V, three-phase, four-wire services shall be seven-terminal, regardless of whether or not the load served uses a neutral. Sockets for 120/240 V, three-phase, four-wire services shall be seven-terminal. Sockets for 240 V, three-phase power services may be five- or seven-terminal depending on transformer grounding. Consult the local Service Planning Office for details.

Sockets for 480 V, three-phase, three-wire power services, shall be five-terminal. Consult the local Service Planning Office for details.

The local Service Planning Office must be contacted before purchasing or installing any 240 V or 480 V, three-phase service equipment. They will provide the requirements for each 240 V or 480 V, three-phase service installation in question. Where incorrect service equipment is installed and the Company was not contacted in advance, the customer will be responsible for all required modifications.

9.3 Meter Switch Larger than 125 A on a 100 A Safety Socket Box

For motor-starting currents only, a meter switch larger than 125 A may be installed on a 100 A continuous-duty-rated safety socket box. The maximum wire size or current-carrying capacity of conductors installed in the customer's raceway shall not exceed #1 AWG and the conduit size shall not exceed 1-1/2 inches. Whenever the actual continuous operating load current exceeds 100 A, a 200 A continuous-duty-rated safety socket box shall be installed.

For motor-starting currents only, a meter switch larger than 200 A may be installed on a 200 A continuous-duty-rated safety socket box, where the maximum wire size or current-carrying capacity of conductors installed in the customer's service raceway does not exceed 250 kcmil, and the conduit size of such raceway does not exceed 2-1/2 inches. Whenever the actual continuous operating load current exceeds 200 A, a switchboard shall be installed (see ESR–6).

9.4 Meter Sockets — Self-Contained — Non-Residential

- A safety socket box with factory-installed test-bypass blocks, as detailed in Section 10.0 through Section 12.0, and Figure 5–8 through Figure 5–18, will be required for the following types of installations:
- Commercial and industrial — including all public buildings
- Multi-family, not separately metered, considered commercial per Section 7.0.
- All three-phase installations (including customer-owned permanent and temporary service meter poles
- Metered streetlights; domestic water pumps; or other domestic agricultural installations served by 240/480 V, three-wire sources, or 480 V, two-wire sources.
- Traffic signal enclosures[2/]

On underground traffic-signal enclosure installations exceeding 120 V, the customer shall provide the auxiliary relay. The relay shall be placed in the customer's section and shall be located ahead (line side) of the customer's unmetered streetlight breaker bus.

A safety socket box will be required for a house-lighting service in a multi-family residential occupancy. House-lighting services include miscellaneous services for laundry rooms, garages, halls, exit lighting, fire alarms, recreation rooms, swimming pools, spas, and similar non-commercial uses on the premises.

[2/] The test block perch shall be provided with mounting holes in the center or right-side position for mounting an auxiliary relay (see Figure 5–12). The Company will only provide and install 120 V relays.

EXCEPTIONS

1. A safety socket box will not be required for single-phase services of a strictly temporary nature rendered on an up-and-down basis (such as temporary service for construction) when the removal of the entire installation is assured within a short period of time acceptable to the Company.
2. A safety socket box will not be required for single-phase service to any single-family, non-commercial installation such as a domestic water pump or other domestic agricultural installation.
3. A safety socket box will not be required for single-phase services to any bus-shelter installations. Metering on a bus shelter with overhead or underground service will be allowed.
4. A safety socket box will not be required for single-phase services that serve an enclosure for the Southern California Gas Company. This enclosure is designed to house cathodic-protection equipment (rectifier AC-to-DC) for gas company facilities.

9.5 Agricultural Power Service

Three-phase, 240 V and 277/480 V agricultural service will be supplied by the normal method whereby the customer supplies complete service facilities (see Section 9.0).

Where the nameplate horsepower rating of any motor does not exceed 30 hp 240 V or 60 hp 277/480 V, a factory-bussed safety socket box with a 100 A continuous-duty rating shall be installed. See Figure 5–8.

The meter socket for 240 V service will be five- or seven-terminal, depending on the grounding of the serving transformer(s). The meter socket for 277/480 V service will be seven-terminal. Consult your local Service Planning Office before purchasing or installing service equipment.

The maximum wire size or current-carrying capacity of the conductors installed in the customer's service raceway shall not exceed that of #1 AWG wire and the conduit size of such raceway shall not exceed 1-1/2 inches. The capacity of the customer's service switch is not limited under these conditions.

The total actual continuous operating load current, excluding motor-starting current, shall not exceed 100 A.

Where the nameplate horsepower rating of any motor does not exceed 60 hp 240 V or 125 hp 277/480 V, a factory-bussed safety socket box with a 200 A continuous-duty rating shall be installed (see Figure 5–9).

The meter socket for 240 V service will be five- or seven-terminal, depending on the grounding of the serving transformer bank. The meter socket for 277/480 V service will be seven-terminal. Consult your local Service Planning Office before purchasing or installing service equipment.

The maximum wire size or current-carrying capacity of the conductors installed in the customer's service raceway shall not exceed that of 250 kcmil wire, and the conduit size of any such raceway shall not exceed 2-1/2 inches. The capacity of the customer's service switch is not limited under these conditions.

The total actual continuous operating load current, excluding motor-starting current, shall not exceed 200 A.

If the total operating load current, excluding motor-operating current, for any reason exceeds 200 A, either at the time of installation or thereafter, the customer shall at such time have complete facilities installed at their expense, consisting of an approved switchboard. See ESR–6.

Table 5–4: Self-Contained and Current-Transformer Meter-Socket Terminal Arrangements

Type of Service	Self-Contained Terminals[a/]	Current-Transformer Terminals[b/]
Single-Phase,120 V, 2-Wire	4-Clip, Exhibit A	—
Single-Phase, 240 V, 3-Wire	4-Clip, Exhibit A	5-Clip, Exhibit B or C
Single-Phase, 120/208 V, 3-Wire	5-Clip, Exhibit B or C	—
Single-Phase, 240/480 V, 3-Wire	4-Clip, Exhibit A	—
Single-Phase, 277/480 V, 3-Wire	5-Clip, Exhibit B or C	—
Three-Phase, 240 V, 3-Wire[c/]	5-Clip, Exhibit B or C	15-Clip, Exhibit E
Three-Phase, 480 V, 3-Wire[d/]	5-Clip, Exhibit B or C	15-Clip, Exhibit E
Three-Phase, 120/208 V, 4-Wire	7-Clip, Exhibit D	15-Clip, Exhibit E
Three-Phase, 120/240 V, 4-Wire Delta[e/]	7-Clip, Exhibit D	15-Clip, Exhibit E
Three-Phase, 277/480 V, 4-Wire	7-Clip, Exhibit D	15-Clip, Exhibit E
Three-Phase, 2400 — 33000 kV 3-Wire	—	15-Clip, Exhibit E
Three-Phase, 4160 — 16500 kV 4-Wire	—	15-Clip, Exhibit E
Totalizing Two, 3-Wire, Single-Phase Circuits	—	15-Clip, Exhibit E
Totalizing Three, 3-Wire, Single-Phase Circuits	—	15-Clip, Exhibit E

a/ See Figure 5–3.

b/ See Figure 5–3.

c/ Single-phase grounded, fourth-wire run for grounding purposes only per G.O. 95, Rule 58.2A-1 or G.O. 128, Rule 36.5A-1

d/ 480 V, three-wire service may be supplied in some areas. Consult the local Company office for details.

e/ Mid-tap grounded, fourth-wire run for a neutral and/or for grounding purposes

Figure 5–3: Meter Socket — Terminal Arrangements

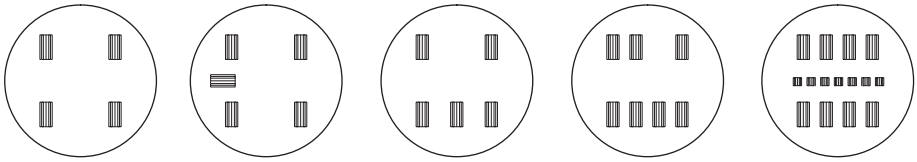

Exhibit A **Exhibit B** **Exhibit C** **Exhibit D** **Exhibit E**

Note: Potential wiring provided for metering shall be a minimum #12 Stranded copper wire, white in color.

Figure 5–4: Separation of Meter Assemblies for Electric and Gas Services

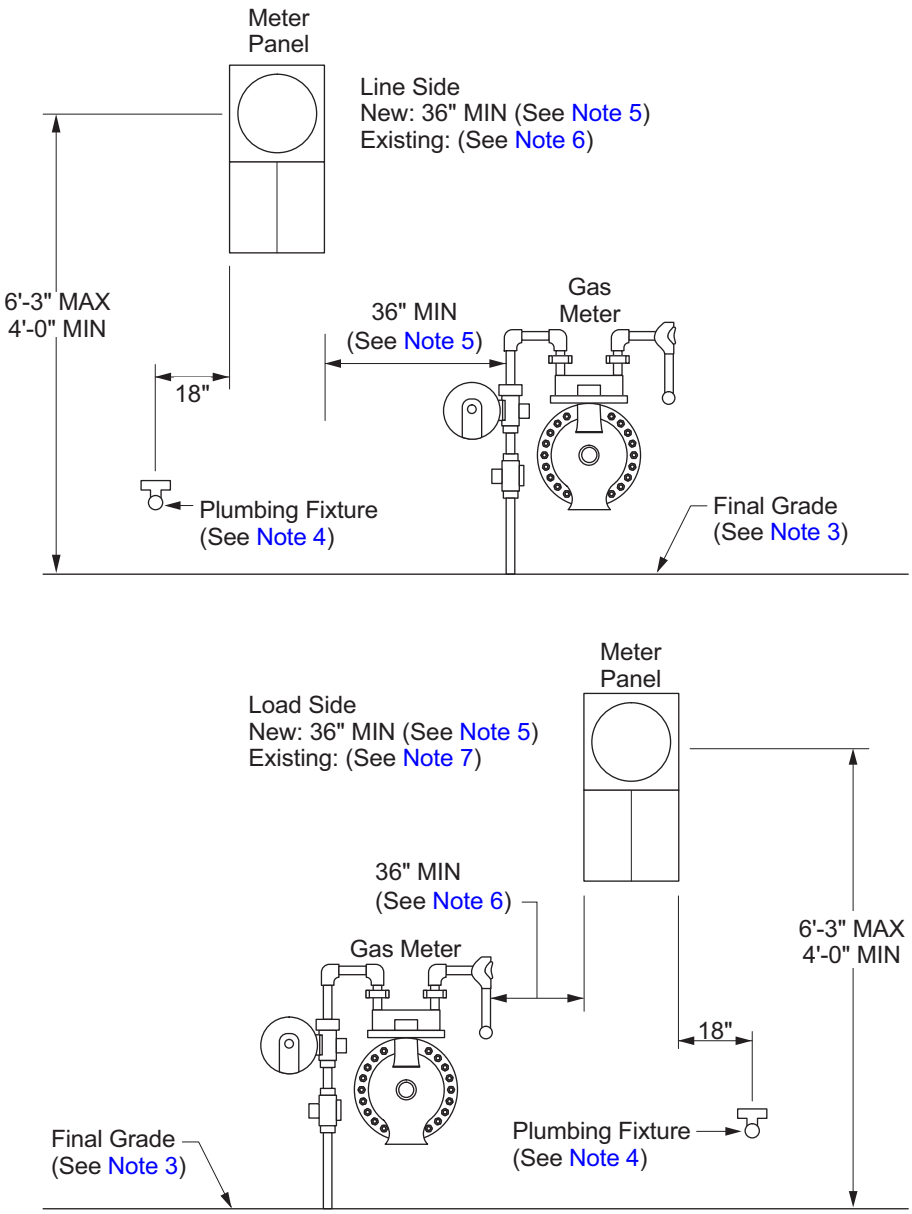

Note(s):

1. Size and dimensions of panels will vary. Drawings are not to scale.
2. This drawing pertains to both overhead and underground electric service applications.
3. Maintain a 3-foot clear, level, and unobstructed workspace in front of electric service equipment.
4. Plumbing fixtures that extend more than 6 inches out from wall surface must be located 18 inches minimum from the outside edge of the meter panel.
5. For new construction only, does not apply for upgrades.
6. Upgrades and replacements — Line Side Panels that are currently installed 24 inches or greater from the line side of the gas meter, clearance may not be reduced. Panels that are currently installed less than 24 inches from the gas meter, may remain (or be re-installed) in existing location.
7. Upgrades and replacements — Load Side Panels that are currently installed 18 inches or greater from the load side of the gas meter, clearance may not be reduced. Panels that are currently installed less than 18 inches from the gas meter, may remain (or be re-installed) in existing location.

Figure 5–5: Workspace — Surface-Mounted or Semi-Flush Meter Installation

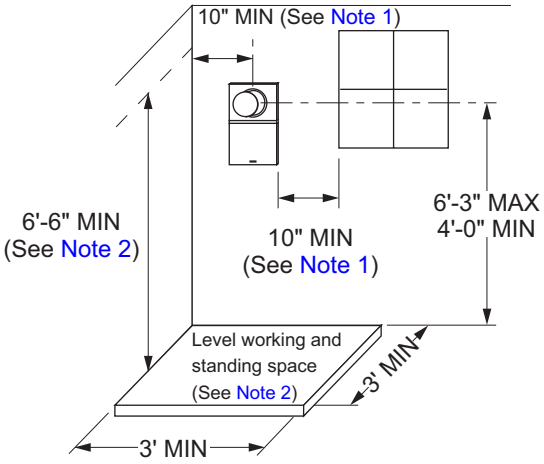

Surface-Mounted or
Semi-Flush Meter Installation

Note(s):

1. The horizontal clearance from the centerline of the meter to the nearest side wall or other obstruction shall be 10 inches minimum. A horizontal clearance from the edge of the meter panel to the edge of a window or doorway (including sliding glass doors) shall be 10 inches minimum. A gas meter or plumbing fixture that does not protrude more than 6 inches out from the wall, or extend less than 18 inches horizontally from the outside edge of the meter panel, shall not be considered an obstruction. See Figure 5–4.
2. A level working and standing surface, clear and unobstructed, entirely on the property of the customer, shall be provided. The minimum width of the workspace shall be 36 inches overall, but need not be centered beneath the meter. The minimum depth of the workspace shall be 36 inches. Where meters are enclosed in a closet or recessed in an enclosure, the depth of the workspace is measured from the outer face of the closet or recess. The minimum height of the workspace shall be 78 inches.

Figure 5–6: Minimum Enclosed Meter Clearances — 0–600 V

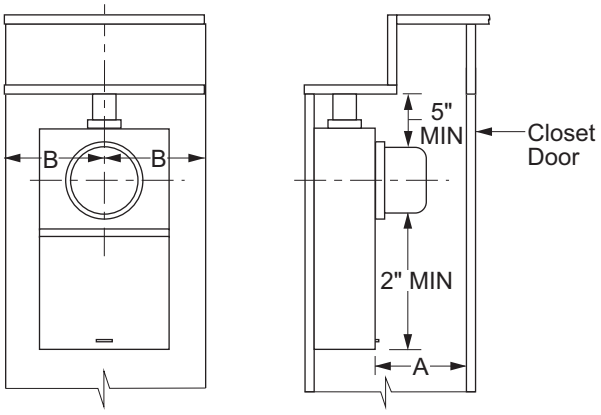

Minimum Enclosed Meter Clearances

	A	B
Residential	7"	10"
Commercial	11"	10"

Figure 5–7: Meter Switches and Main Disconnects

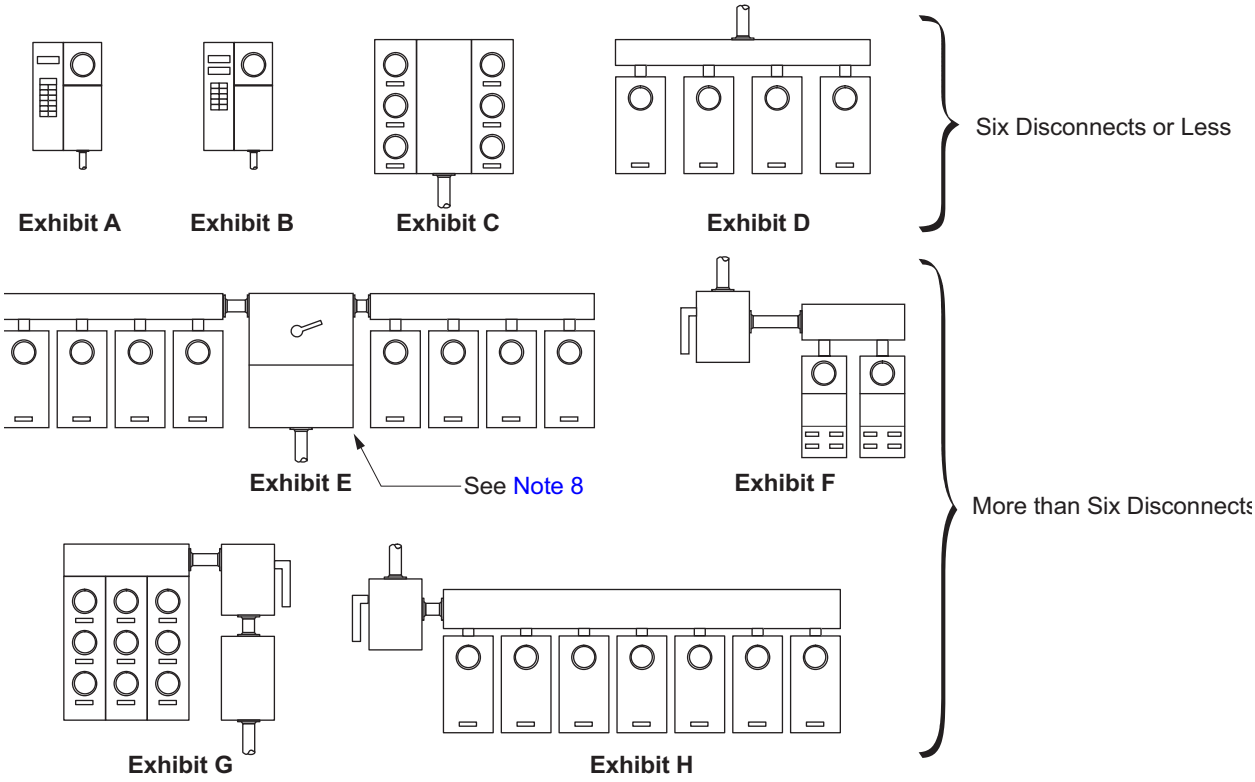

Note(s):

1. The illustrations in Figure 5–7 are typical of overhead and underground residential and commercial metering configurations, but are not the only acceptable configurations.
2. A meter switch shall be installed for each meter as detailed in Section 3.0.
3. A main disconnect shall be installed on the line side of a group of more than six disconnects, meter sockets, safety socket boxes, or instrument-transformer boxes. See Exhibits E through H in Figure 5–7.
4. A main disconnect may be installed on the line side of a group of two-to-six meter sockets, safety socket boxes, or instrument-transformer boxes where each meter has a single-meter switch.
5. A main disconnect shall be installed on the line side of a group of two-to-six meter sockets, safety socket boxes, or instrument-transformer boxes where groups of switches or breakers constitute the meter switches and the total number of such switches, or breakers, exceeds six. See Exhibits E through H in Figure 5–7.
6. The main disconnect may be a fused switch, or circuit breaker. Where fuses are installed, the Company assumes no responsibility for their replacement. Main disconnect enclosures shall be sealable. See Exhibits E through H in Figure 5–7.
7. Where a main disconnect is placed on the supply side of a group of meters, any equipment tapped ahead of the metering or disconnect shall be separately metered.[3/]
8. See ESR–3, Figure 3–10.

10.0 Factory-Wired Safety Socket Boxes

All factory-wired safety socket boxes shall have factory-installed test-bypass blocks that are factory-bussed or wired to the meter socket on both line and load sides. Factory-wired safety socket boxes shall be listed and labeled with a 100/200 A continuous-duty rating.

[3/] **Exception**: The NEC requires ground fault protection equipment.

Test bypass block terminals shall be suitable for copper/aluminum conductors. Factory-wired safety socket boxes with 100 A continuous-duty-rated sockets shall be served with a maximum of 1/0 AWG conductors. Factory-wired safety socket boxes with 200 A continuous-duty-rated sockets shall be served with a maximum of 250 kcmil conductors. See Subsection 9.4, Figure 5–8, and Figure 5–9 for specific application requirements.

The wiring sequence of factory-installed test-bypass blocks, from left to right, is LINE-LOAD, LINE-LOAD, LINE-LOAD. This wiring sequence shall be permanently labeled in 3/4-inch block letters below the test-bypass terminals. Line and load conductors shall be connected only to test-bypass block terminals designed as LINE and LOAD, respectively.

On 120/240 V, three-phase, four-wire installations, and 240 V, three-phase installations where a midpoint grounded fourth wire is run with the service conductors for grounding purposes, the extreme right-hand line and load terminals (two poles) shall be labeled POWER LEG.

The contractor shall furnish and install all necessary grounding and bonding on service entrance equipment. See Section 12.0 through Figure 5–36 for details.

Not more than one load circuit shall leave any safety socket box. Load wiring may leave from the bottom, top, top-side, bottom-side, or bottom-rear, but shall not impair access to the test-bypass blocks.

10.1 Overhead Service

The contractor shall furnish and install both line and load wiring from the point-of-service delivery. The neutral or grounding conductor shall be continuous through the safety socket box and shall be bonded in accordance with Figure 5–8 and Figure 5–9.

10.2 Underground Service

A factory-wired safety socket box, per Figure 5–8 and Figure 5–9, may be used as a combination terminating pull box and a meter-socket box where the service conduit enters the center-bottom knockout, and the test-bypass block terminals are of adequate size for the incoming service lateral conductors. The Company will pull and terminate the service lateral conductors. The contractor shall furnish and install the load wiring.

Where the Company installs service-lateral conductors larger than can be accommodated by the terminals of a safety socket box, or where two or more safety socket boxes are ganged together, a separate terminating pull box will be required. The contractor shall furnish the pull box and install the conductors from the terminating pull box to the safety socket box(es). Consult the local Service Planning Office for details.

Where a safety socket box is used for unmetered street-lighting service, the customer shall provide a means for a photocontroller at the service location. Consult the Company for requirements.

10.3 Underground Service to Equipment Cabinets or Enclosures

Where local ordinance dictates a maximum height requirement for equipment located in franchise areas and the minimum meter height of 4 feet cannot be attained, the minimum meter height may be reduced to 3 feet for an exposed meter when a safety socket box with factory-installed test-bypass facilities is mounted and secured to the outside of an enclosure or cabinet (traffic controller, fiber optics, or wireless equipment enclosures). The minimum and maximum meter height is measured from the level standing and working surface area to the centerline of the meter socket (see ESR–3).

Figure 5–8: Safety Socket Box with Factory-Installed Test-Bypass Facilities — 100 A

EUSERC No. 304

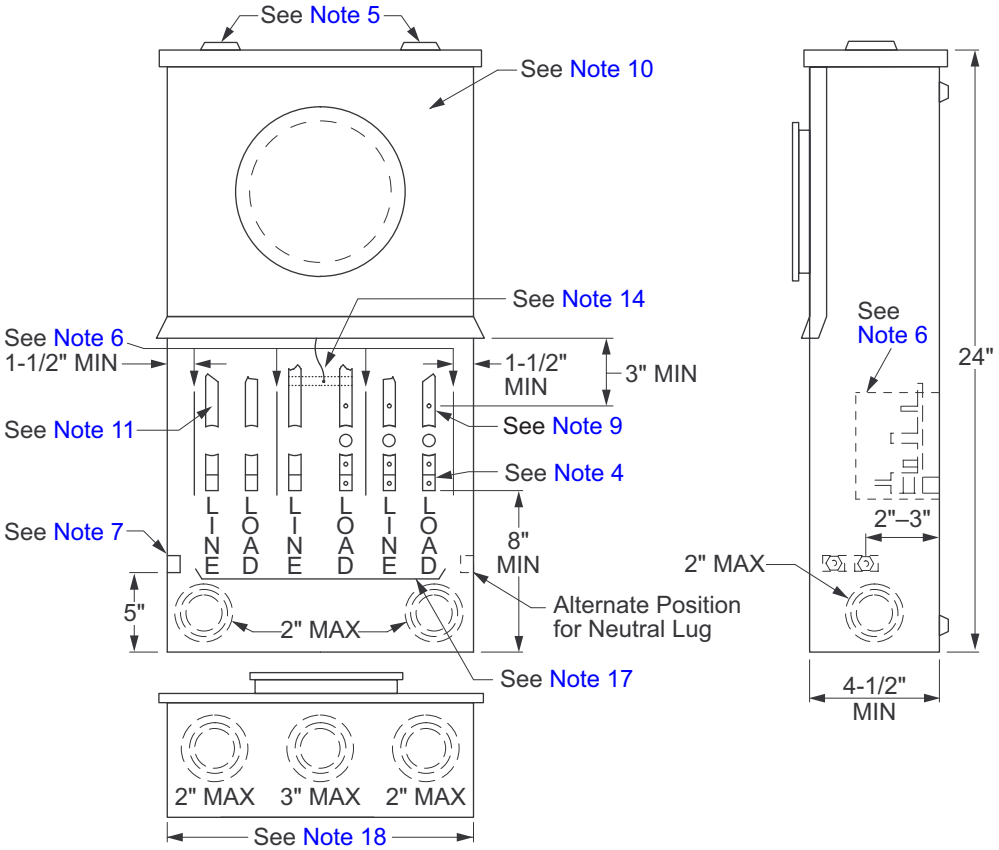

Note(s):

1. See Subsection 9.4 for application; Section 12.0 for 240 V; three-phase delta requirements; Section 10.0 for general requirements; and Figure 5–10 for test-bypass requirements.
2. This device may be used for commercial, multi-family residential (not separately metered), agricultural, and other types of occupancies.
3. This device may be used as a combination terminating pull and meter-socket box for an underground service.
4. Aluminum-bodied terminals for #6 through 1/0 wire capacity.
5. Hubs capped-off if used for underground feed.
6. Rigid insulating barriers. See Figure 5–10.
7. Insulated, bondable, vertical lay-in, double-neutral lug with 1/0 wire capacity, mounted on either sidewall.
8. Test-bypass blocks shall be bussed or wired to socket jaws or terminals. See Table 5–4 and Figure 5–3 for meter-socket clip requirements.
9. Upper test connector studs.
10. All panels shall be independently removable. Meter panel shall be provided with a sealing ring and the meter socket shall be rigidly mounted on a support and attached to the meter panel. Test-bypass compartment cover panel shall be sealable and permanently labeled: “DO NOT BREAK SEALS. NO FUSES INSIDE."
11. Test-bypass block detail on separate drawing. See Figure 5–10.
12. For three-phase, four-wire; connect seventh jaw to body of neutral lug with #12 stranded minimum, copper wire, white in color.
13. For three-phase, four-wire delta; identify right-hand test-bypass block (two poles) as POWER LEG. Identification to be orange in color.
14. For three-phase, three-wire; install bus to connect line and load poles together at top of center test-bypass block and connect fifth jaw to this bus, using #12 stranded minimum, copper wire. Color shall be other than white, gray, green, or orange.
15. For single-phase, three-wire; provide two test-bypass blocks mounted in outer positions and a four-jaw socket.
16. For single-phase, three-wire 120/208 V; provide two test-bypass blocks mounted in outer positions and five-jaw socket. Connect fifth jaw of meter socket to body of neutral lug with #12 stranded minimum, copper wire, white in color.
17. The wiring sequence shall be clearly and permanently labeled in 3/4-inch block letters below the test-bypass terminals.
18. Minimum width of access opening shall be 11-1/2 inches.

Figure 5–9: Safety Socket Box with Factory-Installed Test-Bypass Facilities — 200 A

EUSERC No. 305

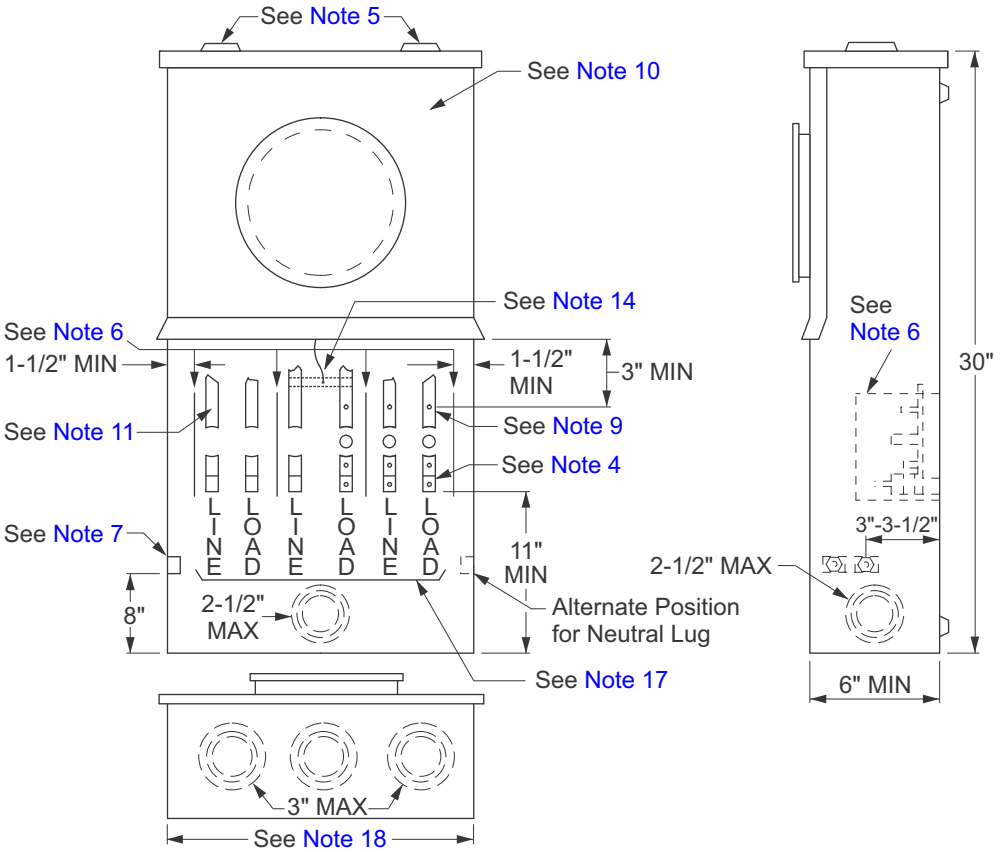

Note(s):

1. See Subsection 9.4 for application; Section 12.0 for 240 V, three-phase delta requirements; Section 10.0 for general requirements; and Figure 5–10 for test-bypass requirements.
2. This device may be used for commercial, multi-family residential (not separately metered), agricultural and other types of occupancies.
3. This device may be used as a combination terminating pull and meter-socket box for an underground service.
4. Aluminum-bodied terminals for 1/0 through #250-wire capacity.
5. Hubs capped-off if used for underground feed.
6. Rigid insulating barriers (see Figure 5–10).
7. Insulated, bondable, vertical lay-in, double-neutral lug with #250-wire capacity, mounted on either sidewall.
8. Test-bypass blocks shall be bussed or wired to socket jaws or terminals. See Table 5–4 and Figure 5–3 for meter, socket clip requirements.
9. Upper test, connector studs.
10. All panels shall be independently removable. Meter panel shall be provided with a sealing ring and the meter socket shall be rigidly mounted on a support and attached to the meter panel. Test-bypass compartment cover panel shall be sealable and permanently labeled: “DO NOT BREAK SEALS. NO FUSES INSIDE.”
11. Test-bypass block detail on separate drawing (see Figure 5–10).
12. For three-phase, four-wire, connect seventh jaw to body of neutral lug with #12 stranded minimum, copper wire, white in color.
13. For three-phase, four-wire delta, identify right-hand test-bypass block (two poles) as POWER LEG. Identification to be orange in color.
14. For three-phase, three-wire, install bus to connect line and load poles together at top of center test-bypass block, and connect fifth jaw to this bus using #12 stranded minimum, copper wire. Color shall be other than white, gray, green, or orange.
15. For single-phase, three-wire, provide two test-bypass blocks mounted in outer positions and a four-jaw socket.
16. For single-phase, three-wire, 120/208 V, provide two test-bypass blocks mounted in the outer positions and a five-jaw socket. Connect the fifth jaw of meter socket to body of neutral lug with a #12 stranded minimum, copper wire, white in color.
17. This wiring sequence shall be clearly and permanently labeled in 3/4-inch minimum block letters below the test-bypass terminals.
18. Minimum width of access opening shall be 13-1/2 inches.

Figure 5–10: Test-Bypass/Disconnect Block for Safety Sockets — 100 A and 200 A — 0–600 V

EUSERC No. 311

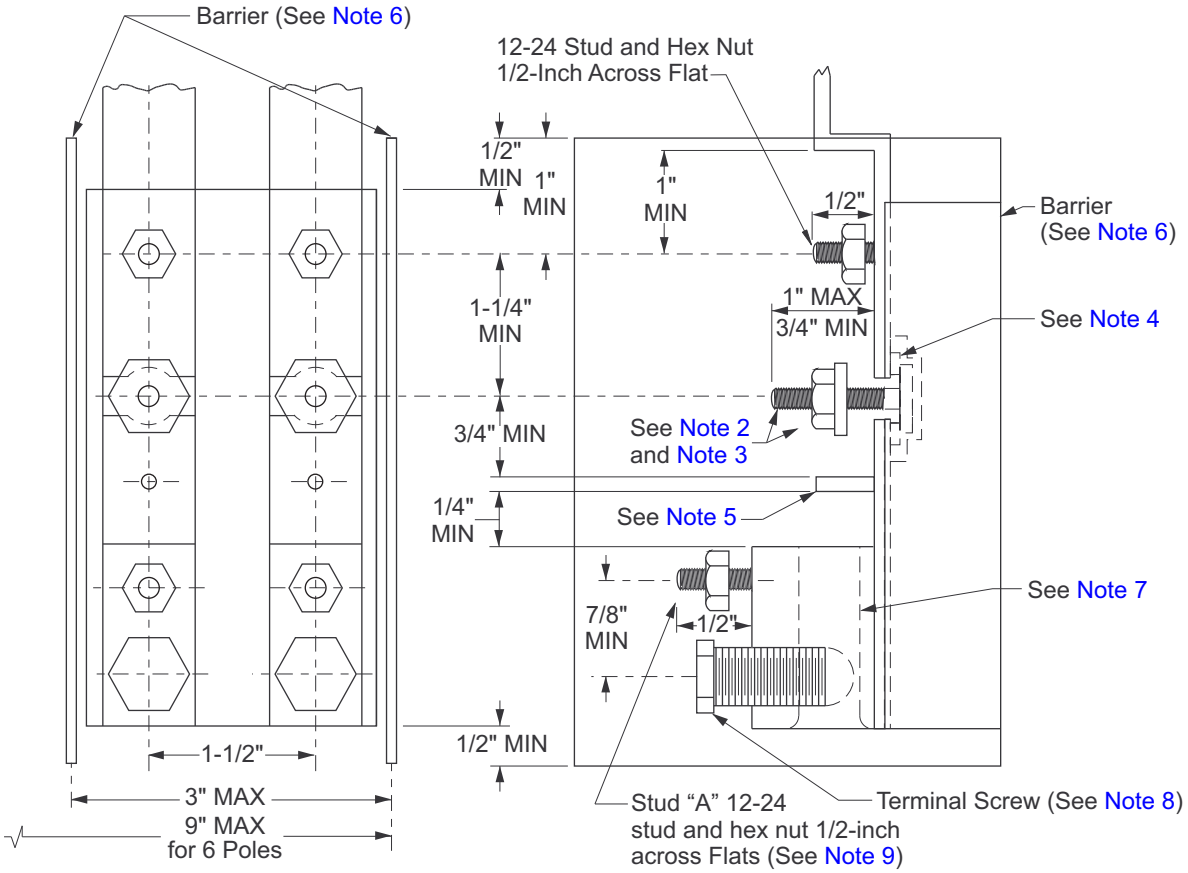

Note(s):

1. Strike distance between upper- and lower-bus sections shall not be less than 1/4 inch when shorting nut is backed off.
2. Circuit-closing nut shall be a hex nut 5/8 inch across flats with plated copper washer attached and have threads counter-bored at bottom to facilitate re-installation. Bolt head shall be secured in place to prevent turning and backout.
3. The circuit-closing nut and bolt assembly shall maintain the applied contact pressure between the plated copper washer and the bus members of the test-bypass block.
4. Insulating washer shall be made from dimensionally stable, nontracking material and shall provide a minimum of 1/8-inch creep distance between the bolt and the bus sections. Bus sections shall be plated.
5. Wire stops shall extend to center of terminal opening or beyond.
6. Rigid insulating barriers shall project at least 1/4 inch beyond any energized parts when the maximum wire size is installed.
7. Terminals shall be aluminum-bodied. For required conductor range, see Figure 5–8 and Figure 5–9. The opening shall extend through the terminal body and, if wire hole is round, shall be chamfered as necessary to facilitate installation of the largest size wire.
8. The terminal screw may be of the Allen type (3/16 inch across flats for 100 A, 5/16 inch across flats for 200 A). If stud "A" is a part of the terminal screw, the terminal screw shall be 5/8-inch hex across flats.
9. Stud "A" shall be located in the clear area between the terminating lug and the circuit-closing nut, and may be positioned on the terminal body, on the terminal screw, on the bus member, or incorporated as part of the wire stop.

Figure 5–11: Test-Bypass/Disconnect Block for Safety Sockets — 100 A and 200 A — 0–600 V (Bussed and/or Cable Terminations)

EUSERC No. 312

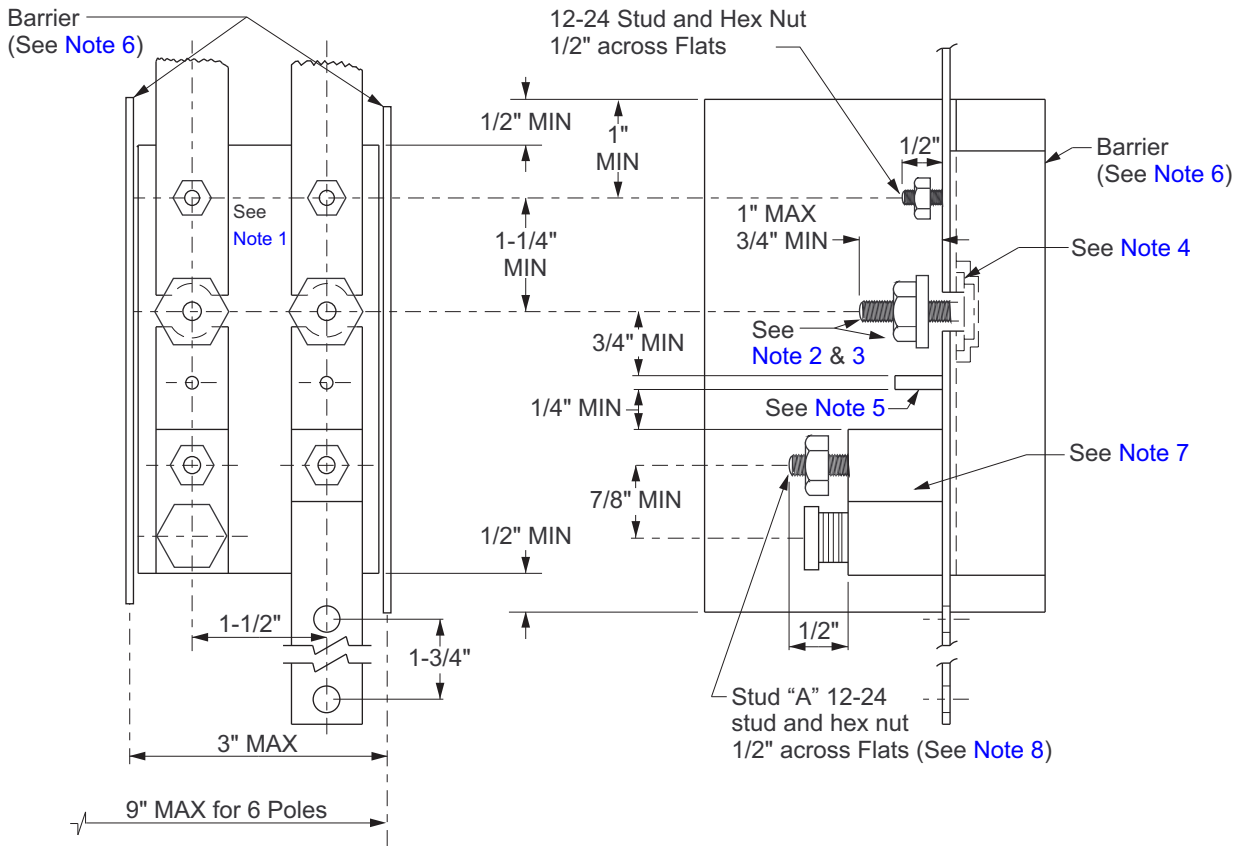

Note(s):

1. Strike distance between upper- and lower-bus sections shall not be less than 1/4 inch when shorting-nut is backed off.
2. Circuit-closing nut shall be a hex nut 5/8 inch across flats with plated copper washer attached and have threads counter-bored at bottom to facilitate re-installation. Bolt head shall be secured in place to prevent turning and backout.
3. The circuit-closing nut and bolt assembly shall maintain the applied contact pressure between the plated copper washer and the bus members of the test-bypass block.
4. Insulating washer shall be made from dimensionally stable, nontracking material and shall provide a minimum of 1/8-inch creep distance between the bolt and the bus sections. Bus sections shall be plated.
5. Wire stops are not required if line and/or load is connected with bus bar. If cable terminals are used, Figure 5–10 construction requirements shall apply.
6. Rigid insulating barriers shall project at least 1/4 inch beyond any energized parts when the maximum wire size is installed.
7. Termination of bus bar and cable line or load conductors may be cable as per Figure 5–10 or bus as per this drawing. If bus and cable terminations are used together, proper locations and alignment of stud "A" must be maintained to facilitate the installation of bypass jumpers.
8. Stud "A" shall be located in the clear area between the terminating lug and the circuit-closing nut, and may be positioned on the terminal body, on the terminal screw, on the bus member, or incorporated as part of the wire stop.
9. Serviceability—The line and/or load bus is to be connected to the bus block member in a manner that allows ready replacement of the test-bypass block assembly.

Figure 5–12: Safety Socket Box for Meters Used with Instrument Transformers

EUSERC No. 339

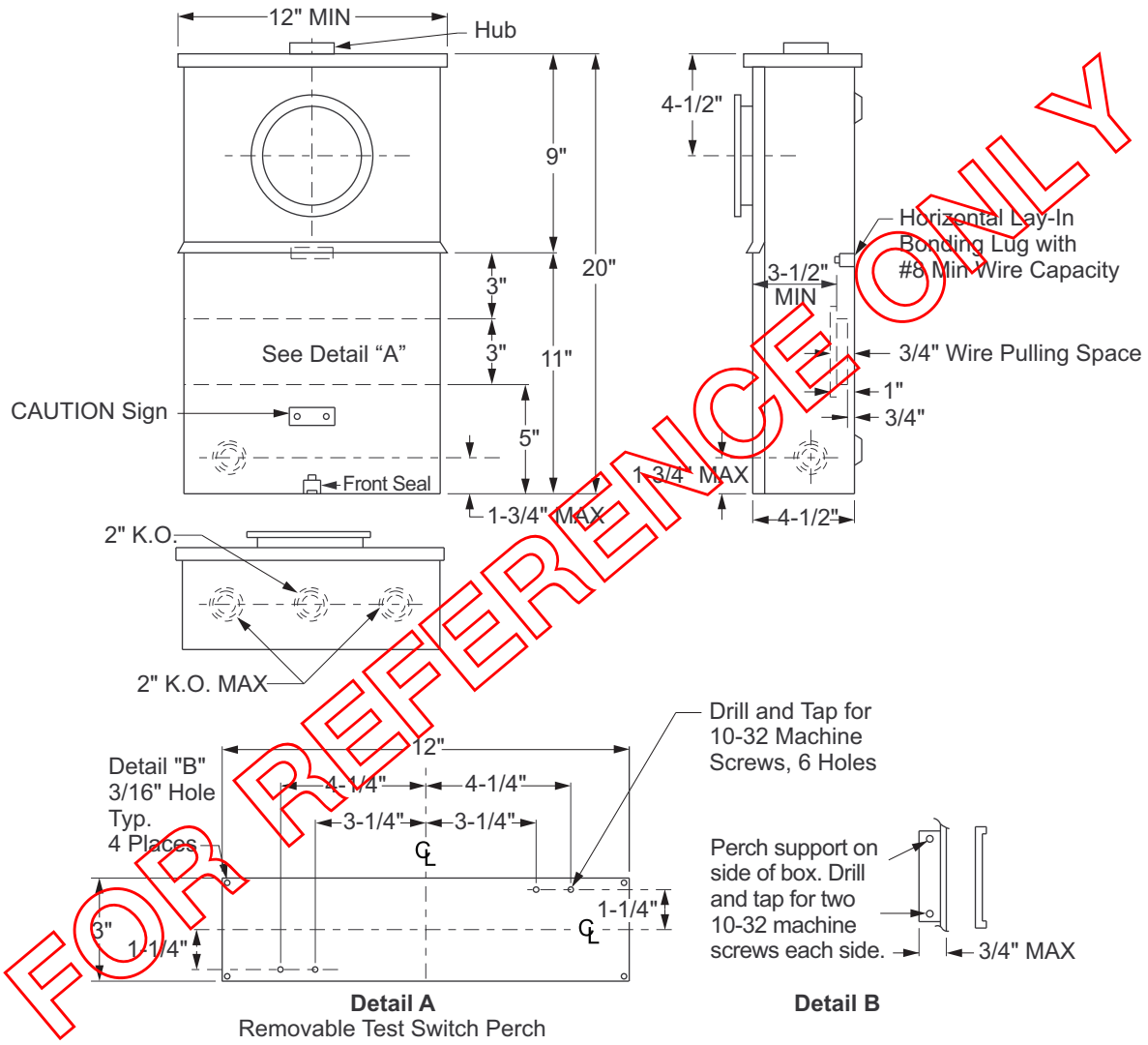

FOR REFERENCE ONLY

Note(s):

1. This device may be used as safety socket box where the Company installs a nonresidential 120 V, two-wire service or a single-phase service requiring auxiliary equipment in the test block compartment (see Subsection 9.4).
2. See Table 5–4 and Figure 5–3 for meter socket requirements.
3. This box is not to be used for commercial, industrial, multi-family, or agricultural self-contained services (see Figure 5–8 and Figure 5–9).
4. All section covers shall be independently removable. Upper cover shall be nonremovable when meter is in place. Lower cover shall be sealable and permanently labeled "DO NOT BREAK SEALS, NO FUSES INSIDE."

11.0 Current-Transformer Cabinet and Meter-Socket Panel

A current-transformer cabinet or switchboard-service section shall be installed when the capacity requirements of self-contained metering is exceeded. Use of a switchboard-service section is recommended for services 201 A through 400 A (see ESR–6 for details).

The maximum capacity of a current-transformer cabinet installation is 400 A. Where the capacity of the largest conductor permitted in the service-wiring raceway exceeds 400 A, a switchboard-service section shall be installed.

A current-transformer cabinet may be used as a combination current-transformer cabinet and service-terminating pull box for separately-metered, single-commercial installations only.

Only conductors associated with metering or grounding shall be permitted in a current-transformer cabinet. No connections shall be made in any current-transformer cabinet to supply any other meter, except as required by the Company.

RkVah meters associated with current-transformer cabinet installations shall be installed in accordance with Figure 5–12 and Figure 5–17. Where a current-transformer cabinet and its associated safety socket box are located inside a meter room, the entire meter and service installation shall be placed in the same room. No aisle, passageway, door used for through traffic, or other obstruction shall interfere or otherwise restrict ready access between the service equipment. Where located outside of a building, the entire service installation shall be grouped in one location, and the requirements for unobstructed access shall apply.

FOR REFERENCE ONLY

A level standing and working surface, entirely on the property served, clear and unobstructed, at least equal to the width and height of the current-transformer cabinet space and extending not less than 36 inches to the front shall be provided. For all installations, the minimum access and work space shall be 36" × 36" × 6'-6". Installation of this type of equipment in a cabinet-type enclosure is prohibited.

When a meter is installed on an instrument-transformer cabinet, the meter panel shall be a minimum #12 AWG, and a removable secondary test-switch perch, drilled and tapped, shall be installed as shown in detail in Figure 5–13 and Figure 5–14. Where meters are installed adjacent to the instrument-transformer box, refer to the requirements in Figure 5–17.

The contractor shall furnish and install a transformer mounting base as shown in Figure 5–15 through Figure 5–16 together with all line and load conductors and pressure-type connectors. Where the instrument-transformer cabinet is used as a terminating pull box for a single commercial occupancy, the Company will furnish and install the incoming service-lateral conductors and their connectors. The Company will furnish and install all instrument-transformer secondary wiring.

Conductors attached to the lower mounting base terminals shall incline slightly forward to the front and center of the box to provide a 6-inch minimum clear space along the conductors before bending to enter any knockout. Service conductors shall enter the cabinet at one end, or within 2 inches of the end, and shall exit the cabinet at the opposite end, or within 2 inches of that end.

The neutral conductor shall be continuous through the instrument-transformer cabinet and shall be run at the rear or along the side of the cabinet. Where used as a terminating pull box, a double neutral lug shall be provided. The neutral shall be bonded to the enclosure.

See Figure 5–13 through Figure 5–17 for current-transformer cabinet and installation details.

Figure 5–13: Combination Current-Transformer Cabinet and Meter-Socket Panel for Overhead Service — 400 A Maximum

EUSERC No. 313

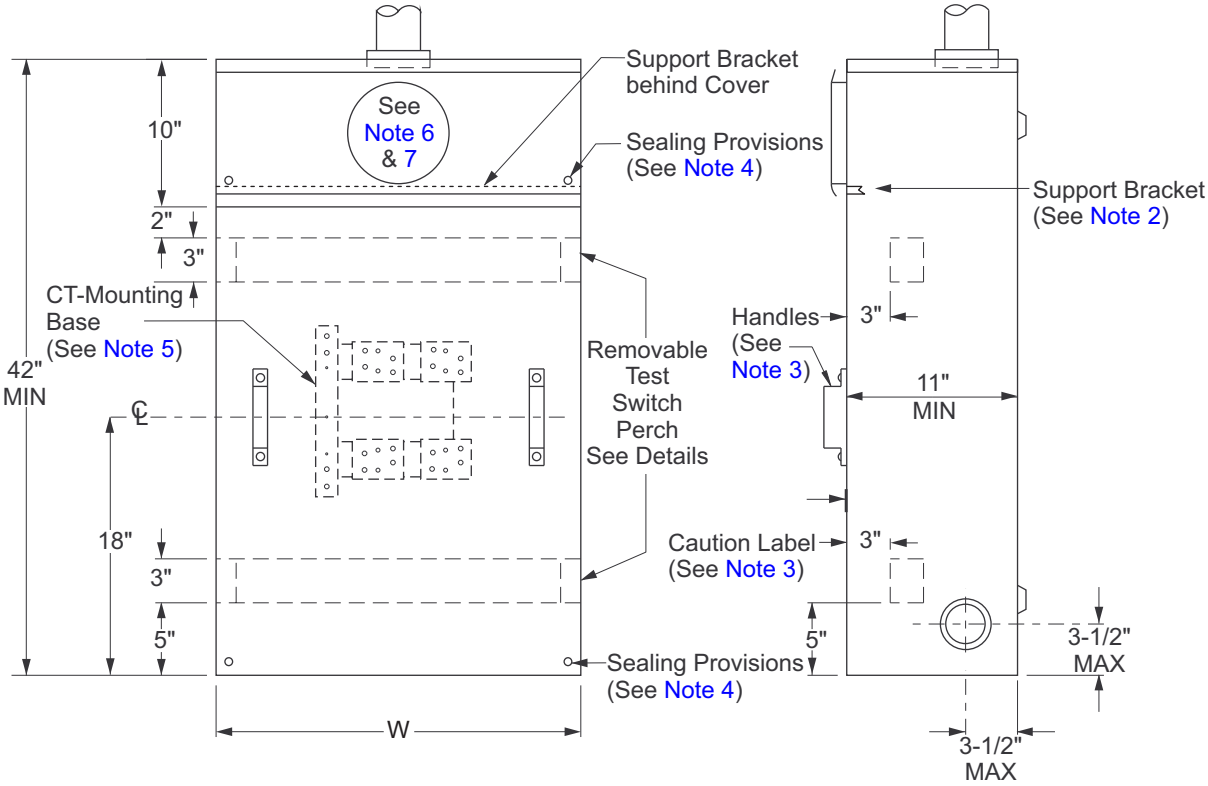

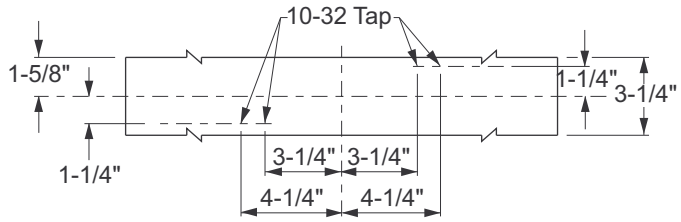

Removable Test Switch Perch

Minimum Box Dimensions

W (MIN)	
3Ø 4-wire Y or △	1Ø or 3Ø 3-wire
36"	24"

Note(s):

1. See Section 11.0 for general requirements.
2. A panel support bracket shall be provided as shown for the meter and current-transformer panels. The meter panel shall be attached to the bracket with screws to prevent the bracket from pulling out when the meter is removed from the socket.
3. Current-transformer compartment cover panel(s) shall be limited to a maximum of 9 square feet in area, shall have two lifting handles and a caution label reading “DO NOT BREAK SEALS, NO FUSES INSIDE.”
4. All meter panels and current-transformer compartment covers shall be sealable.
5. See Figure 5–15 through Figure 5–16 for current transformer (CT) mounting base details.
6. See Table 5–4 and Figure 5–3 for meter socket requirements.
7. Socket shall be front-connected type for CT wiring.

Figure 5–14: Combination Current-Transformer Cabinet and Meter-Socket Panel for Underground Service —800 A Maximum

EUSERC No. 314

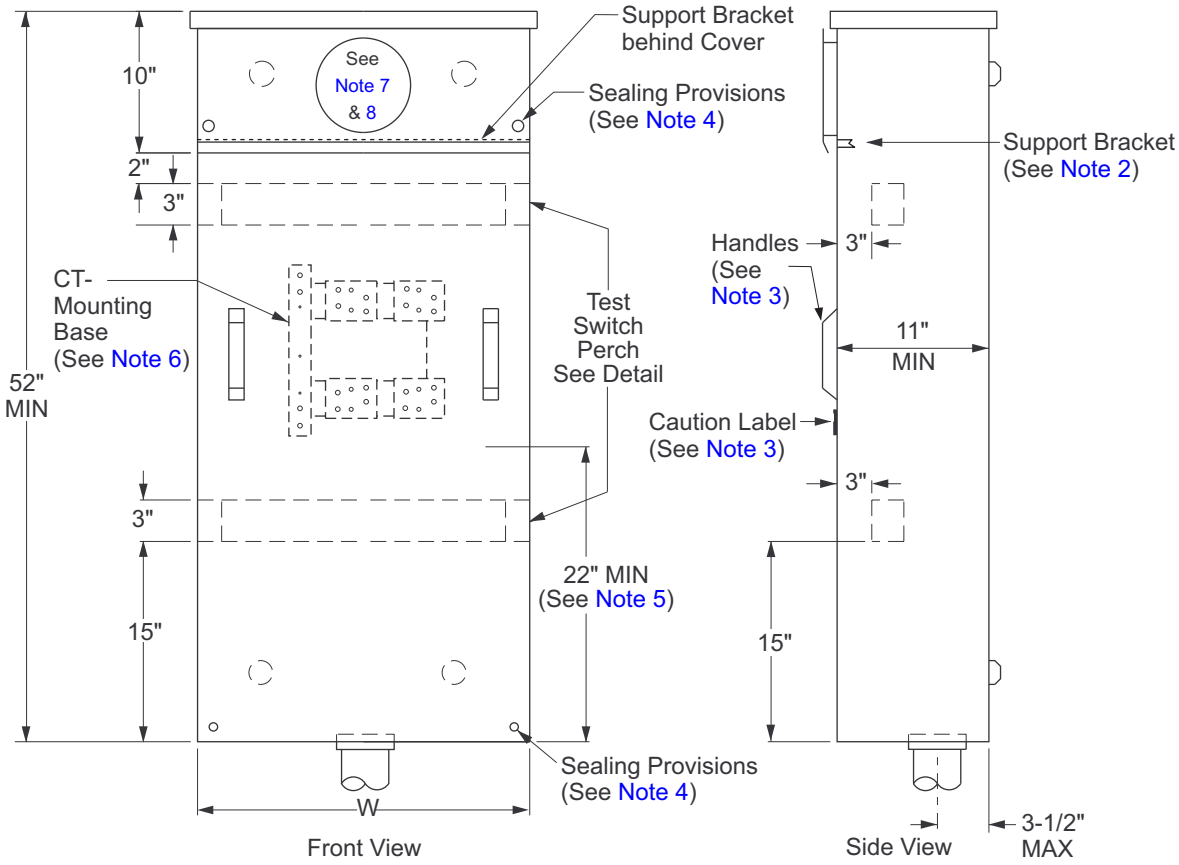

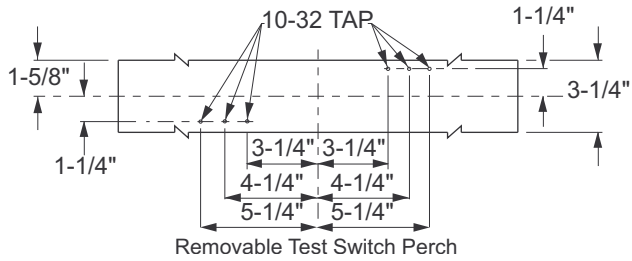

Minimum Box Dimensions

W (MIN)	
3Ø 4-wire Y or △	1Ø or 3Ø 3-wire
36"	24"

Note(s):

1. See Section 11.0, for general requirements.
2. A panel support bracket shall be provided as shown for the meter and current-transformer panels. The meter panel shall be attached to the bracket with screws to prevent the bracket from pulling out when the meter is removed from the socket.
3. The current-transformer compartment cover panel(s) shall be limited to a maximum of 9 square feet in area, shall have two lifting handles and a caution label reading “DO NOT BREAK SEALS, NO FUSES INSIDE.”
4. All meter panels and current-transformer compartment covers shall be sealable.
5. The termination height dimension is measured from the centerline of the lowest termination bolts. The height of the lowest neutral cable termination bolt may be reduced to a 20-inch minimum.
6. See Figure 5–15 through Figure 5–16 for CT mounting details.
7. See to Table 5–4 and Figure 5–3 for meter socket requirements.
8. Socket shall be front-connected type for CT wiring.
9. Utility connections shall be on termination bolts/studs; mechanical lugs are not allowed.

Figure 5–15: Current–Transformer Mounting Base Three-Phase, Four-Wire Services — 0–600 V Through 400 A Maximum

EUSERC No. 329A

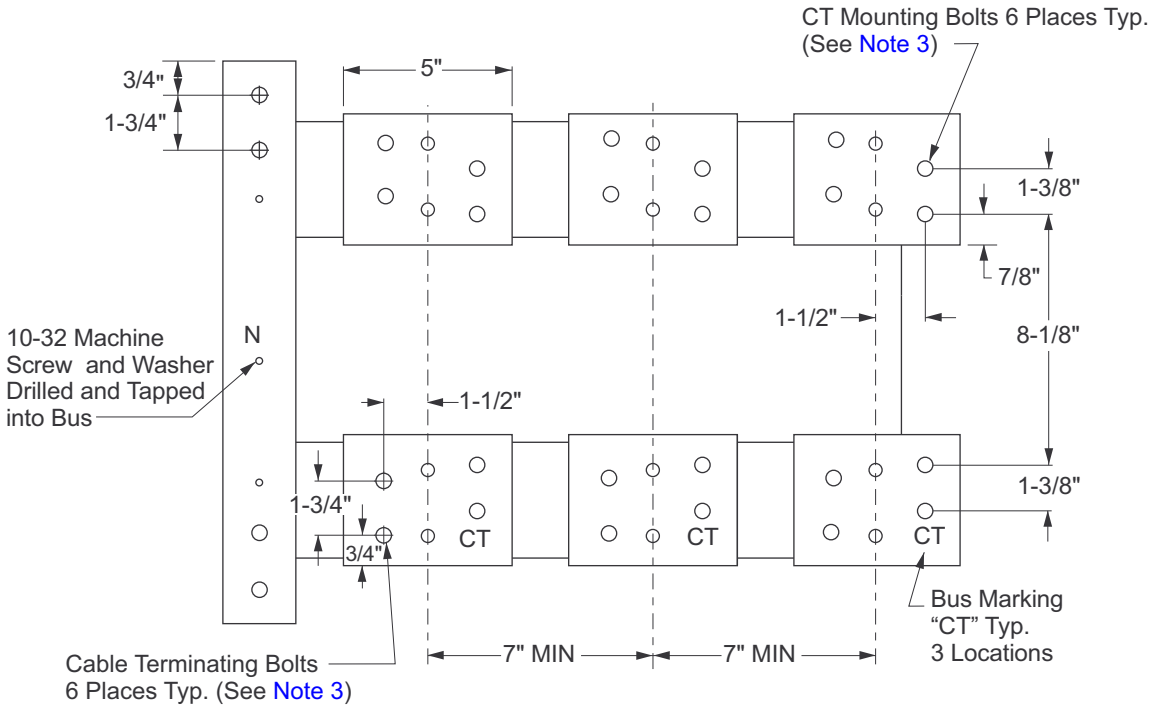

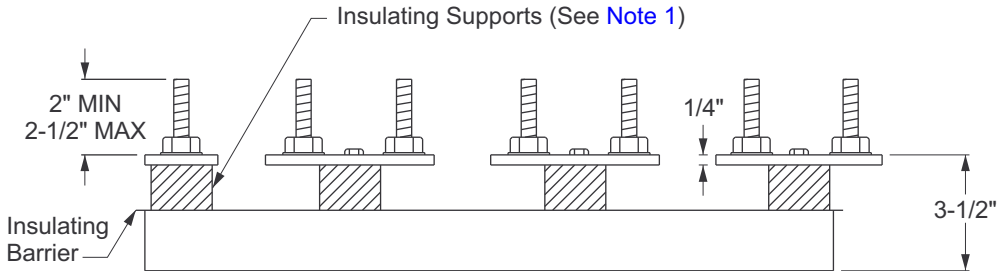

Note(s):

1. Insulated supports shall be rated for the serving voltage and have sufficient mechanical strength for the application.
2. Mounting base accepts bar-type current transformers only.
3. Two 1/2-inch steel bolts shall be provided for each cable terminating position and each bolt shall be furnished with a spring washer and a nut. The spring washer may be either a cone-type (Belleville) or a split-ring washer and a flat washer. Bolts shall be secured in place and spaced as shown. All parts shall be plated to prevent corrosion.
4. For applications, see Figure 5–13 and Figure 5–14.
5. This mounting base has a maximum AIC rating of 50 kA.

Figure 5–16: Current–Transformer Mounting Base Single or Three-Phase, Three-Wire Services — 0–600 V Through 400 A Maximum

EUSERC No. 328A

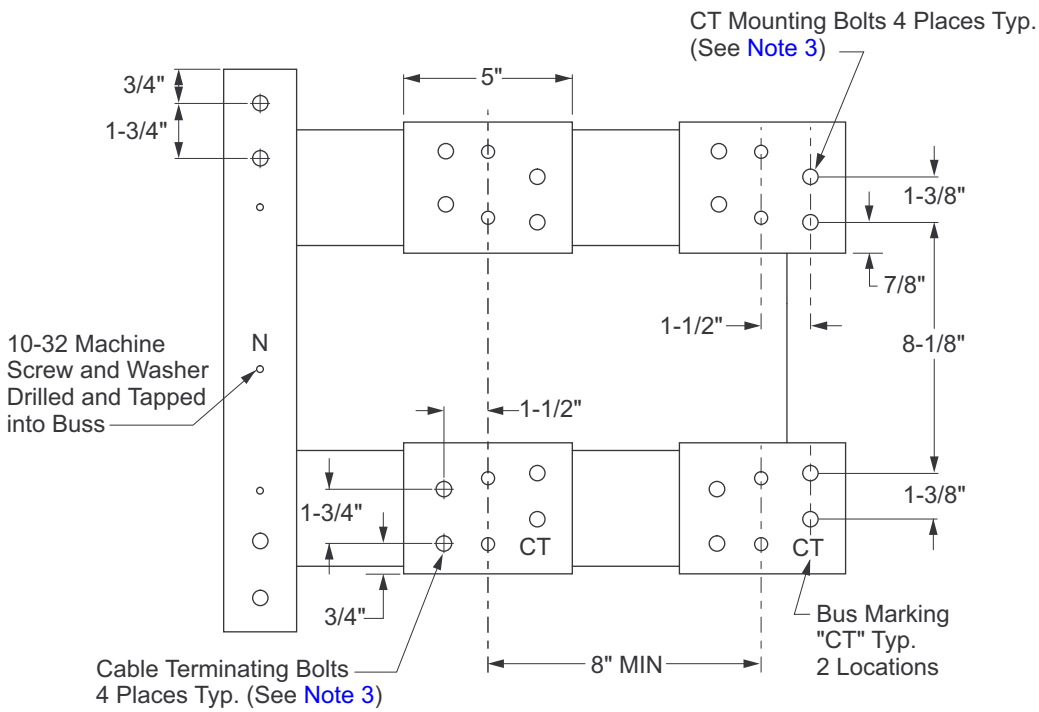

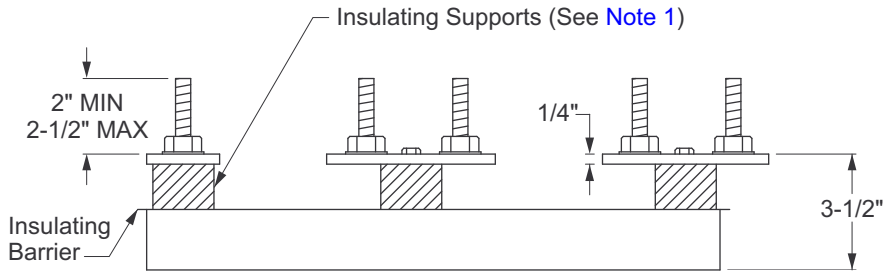

Note(s):

1. Insulated supports shall be rated for the serving voltage and have sufficient mechanical strength for the application.
2. Mounting base accepts bar-type current transformers only.
3. Two 1/2-inch steel bolts shall be provided for each cable terminating position and each bolt shall be furnished with a spring washer and a nut. The spring washer may be either a cone-type (Belleville) or a split-ring washer and a flat washer. Bolts shall be secured in place and spaced as shown. All parts shall be plated to prevent corrosion.
4. For applications, see Figure 5–13 and Figure 5–14.
5. This mounting base has a maximum AIC rating of 50 kA.

Figure 5–17: Single-Phase and Three-Phase Meters and Metering Equipment EXO Current-Transformer Installation Meter Spacing and Clearances

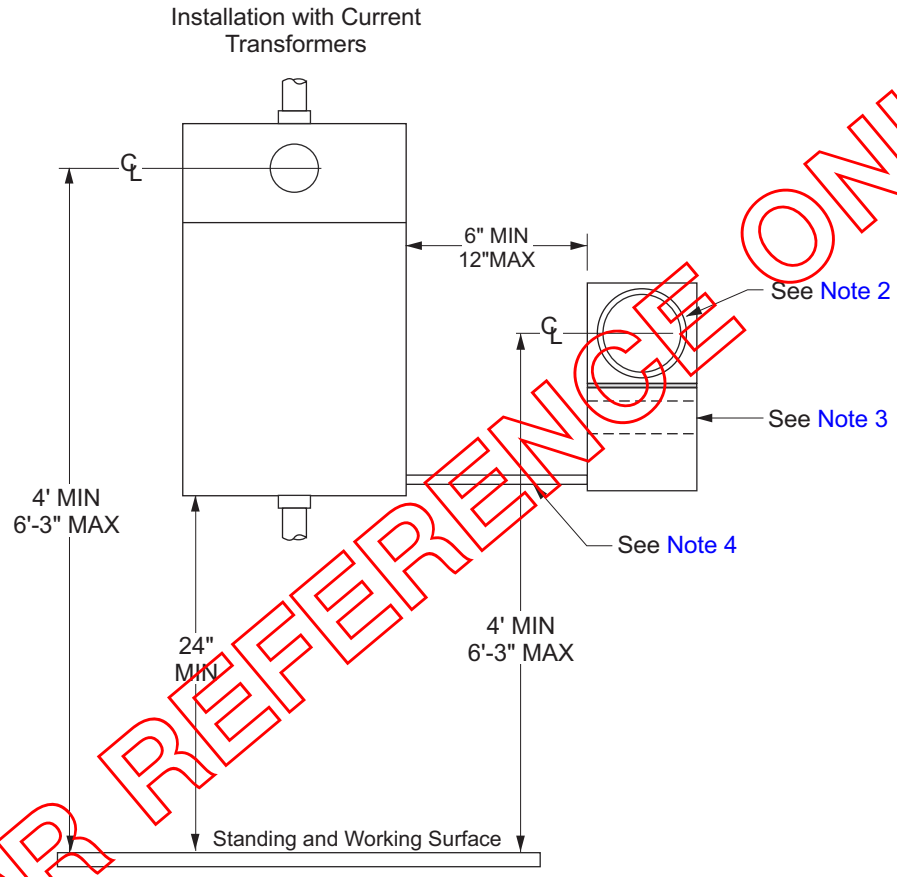

FOR REFERENCE ONLY

Note(s):

1. Instrument-transformer cabinet, see Figure 5–13 and Figure 5–14. See Figure 5–15 and Figure 5–16 for current-transformer mounting base.
2. For meter socket terminal arrangement, see Table 5–4 and Figure 5–3.
3. For safety socket box, see Figure 5–12 when a phasing transformer is used.
4. Secondary conduit, - minimum 1-1/4 inches, conduit may leave top, side, or bottom of transformer box at any location which does not interfere with the service wiring raceways. See Section 11.0, for location of box

12.0 Grounding and Bonding

The California Public Utilities Commission (CPUC) requires transformer windings to be effectively grounded, and where a secondary system is grounded at any point, the CPUC and the NEC require the grounded conductor to be run to each service.

The local Service Planning Office must be consulted before purchasing any 240 V, three-phase service equipment. They will provide specific requirements for each 240 V installation in question. Where incorrect service equipment is installed and the Company had not been contacted in advance, the customer will be responsible for all modifications.

Two hundred forty (240) V, three-phase, three– or four–wire delta services will be supplied from secondary systems which have either one phase grounded or the midpoint of one transformer grounded. In either case, the Company will install a neutral or separate grounding conductor with the service conductors. This conductor and the customer's neutral or grounding conductor connected to it, shall be bonded as required.

The grounding conductor may pass through the metering compartment, but where a bare wire is used, it shall be barriered from the other service entrance conductors. Typical installations are illustrated in the Electrical Service Grounding and Bonding Diagrams shown in Figure 5–18 through Figure 5–36.

The metering requirements for 240 V, three-phase delta services will vary from location to location, depending on the transformer grounding method used. Where one phase of the system is grounded, self-contained metering equipment must have 5-terminal meter sockets, and instrument-transformer equipment must have 15-terminal meter sockets. Where the midpoint of one transformer is grounded, self-contained metering equipment must have 7-terminal meter sockets and current-transformer metering equipment must have 15-terminal meter sockets, depending on ampacity and bus configuration (see Table 5–4 and Figure 5–3).

12.1 Requirements for Various Serving Voltages

Serving voltages will be supplied as follows:

A. A 120 V, single-phase, two-wire service will be supplied from secondary systems with one conductor grounded.

B. A 120/240 V and 240/480 V, single-phase, three-wire service will be supplied from secondary systems with the transformer midpoint grounded.

C. A 120/208 V and 240/480 V, single-phase, three-wire service will be supplied from secondary systems with the point common to all transformers grounded. Single-phase services from these systems will be supplied as three-wire services whether or not a neutral is required for the load to be served. Three-phase services from these systems will be supplied as four-wire services whether or not a neutral is required for the load to be served.

D. A 120/240 V, four-wire delta combination single- and three-phase services will be supplied from secondary systems which have the midpoint of one transformer grounded.

E. A 240 V, three-phase, three- or four-wire delta service will be supplied from secondary systems, which have either one phase grounded or the midpoint of one transformer grounded. A 240 V, three-phase, three-wire service and 120/240 V, three-phase, four-wire service shall **not** be served from the same transformer bank.

F. A 480 V, three-phase, three-wire delta system is ungrounded.

G. A 277/480 V, four-wire system will be wye-connected with a neutral supplied with each service whether or not a neutral is required for the load to be served.

With each new service from a grounded secondary system, the Company will install a neutral or grounding conductor. This conductor (or the customer's neutral or grounding conductor connected to it) shall be bonded to the service-equipment enclosure under seal and ahead of the meter switch or main service disconnect. The minimum conductor size shall be in accordance with Section 250-24 (b) of the current edition of the NEC.

All other service-wire installation grounding and bonding is subject to the requirements of applicable codes. Grounding electrode conductors required by such codes shall, where practicable, be connected to the neutral or bonding terminals in compartments which will not be under seal.

12.2 Electrical Service Grounding and Bonding Diagrams

The Southwestern Section of the International Association of Electrical Inspectors (IAEI) has issued a bulletin under the title "Electrical Service Entrance Grounding and Bonding Diagrams." These diagrams are recommended and approved by the IAEI. They are, therefore, recognized standards for Arizona, California, Hawaii, Nevada, and New Mexico areas, but are not necessarily the only methods of properly grounding and bonding.

The Company recognizes the value of such standards and has reproduced the diagrams on the following pages. However, with the exception of the bonding requirements detailed previously, these diagrams are not to be considered service requirements of the Company.

Figure 5–18: Combination Meter and Service Section for Overhead Dwelling Service

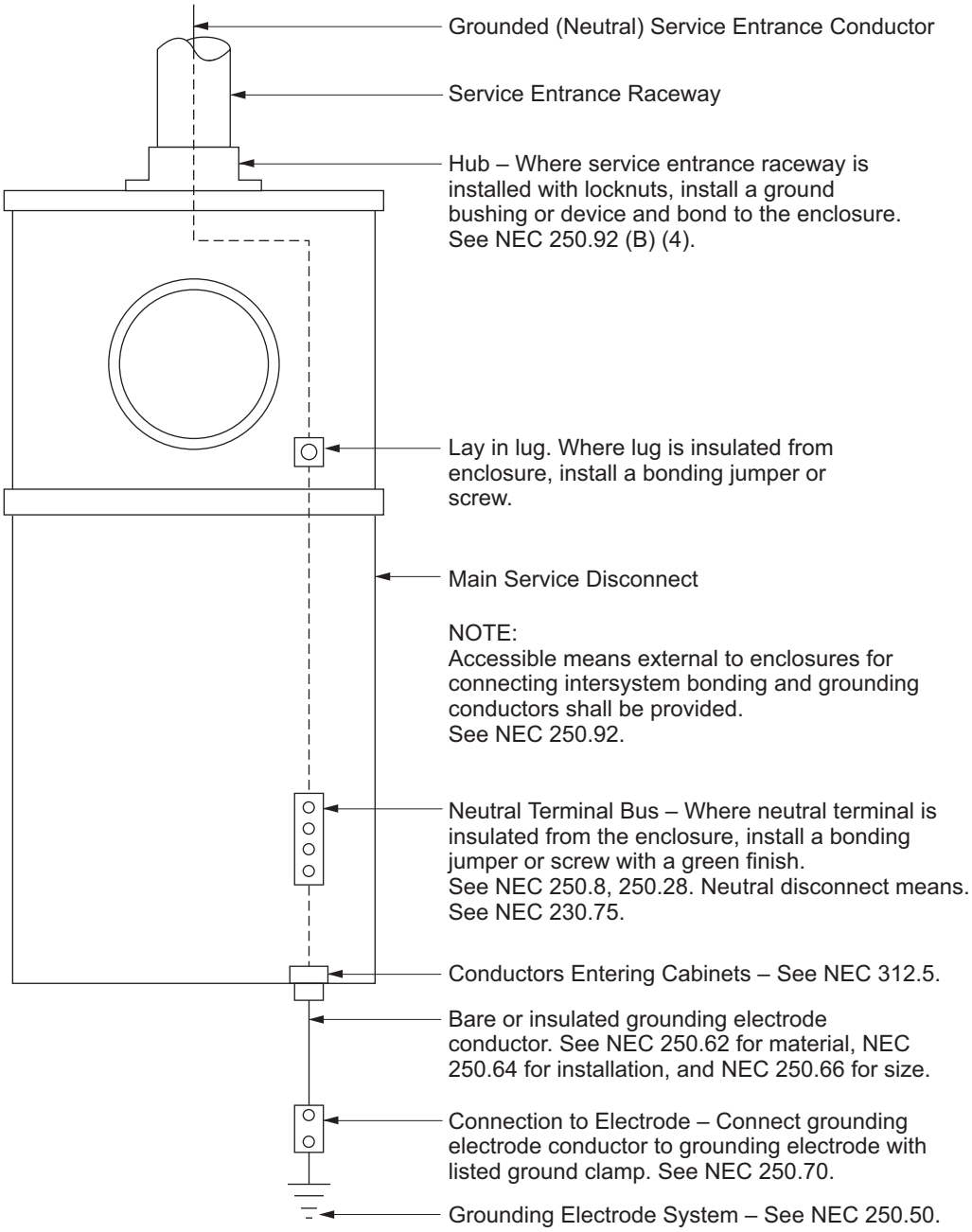

Figure 5–19: Meter Remote from Service Section for Overhead Dwelling Service

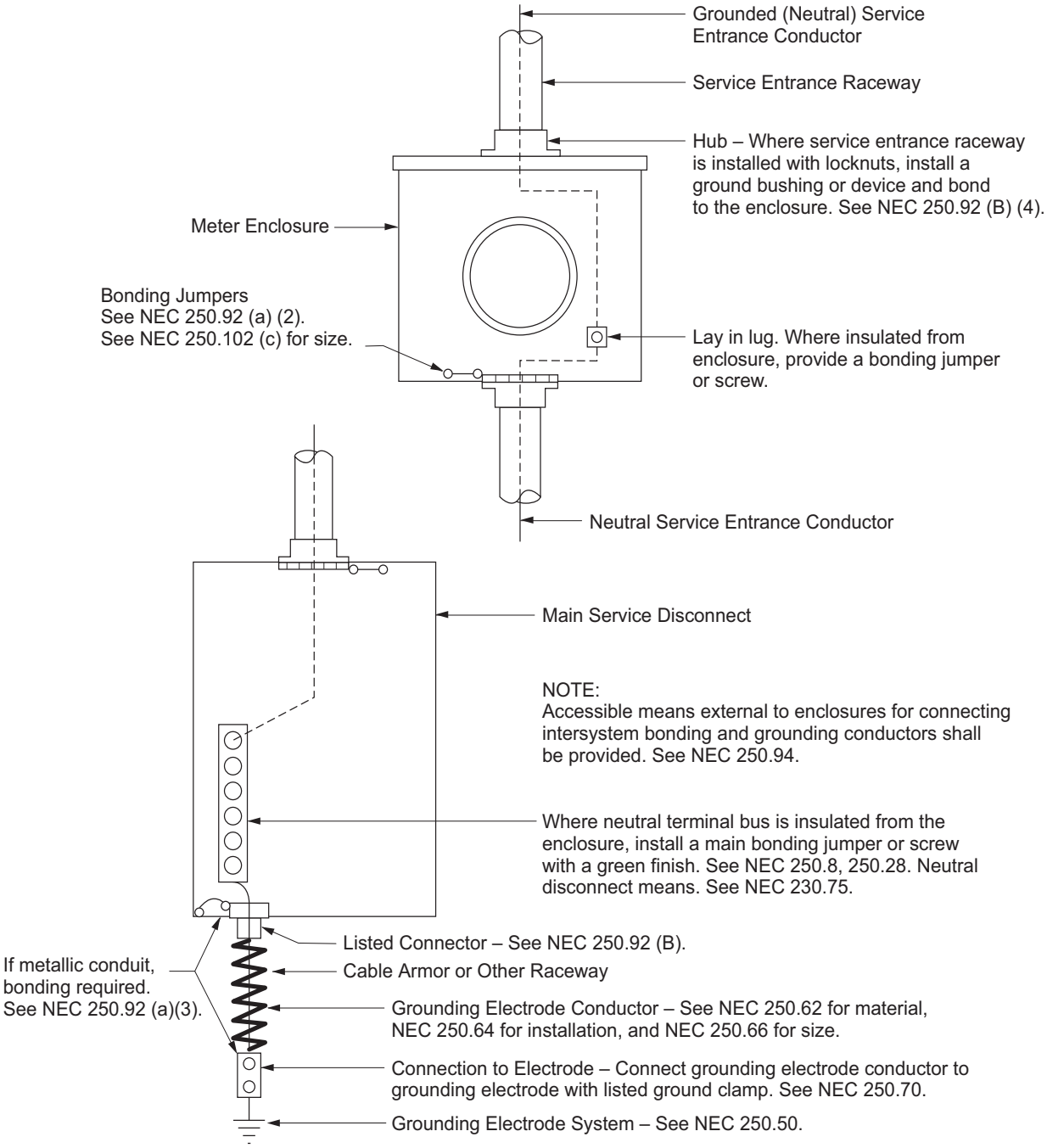

Figure 5–20: Meter and Service with Current-Transformer Enclosure Overhead Supply

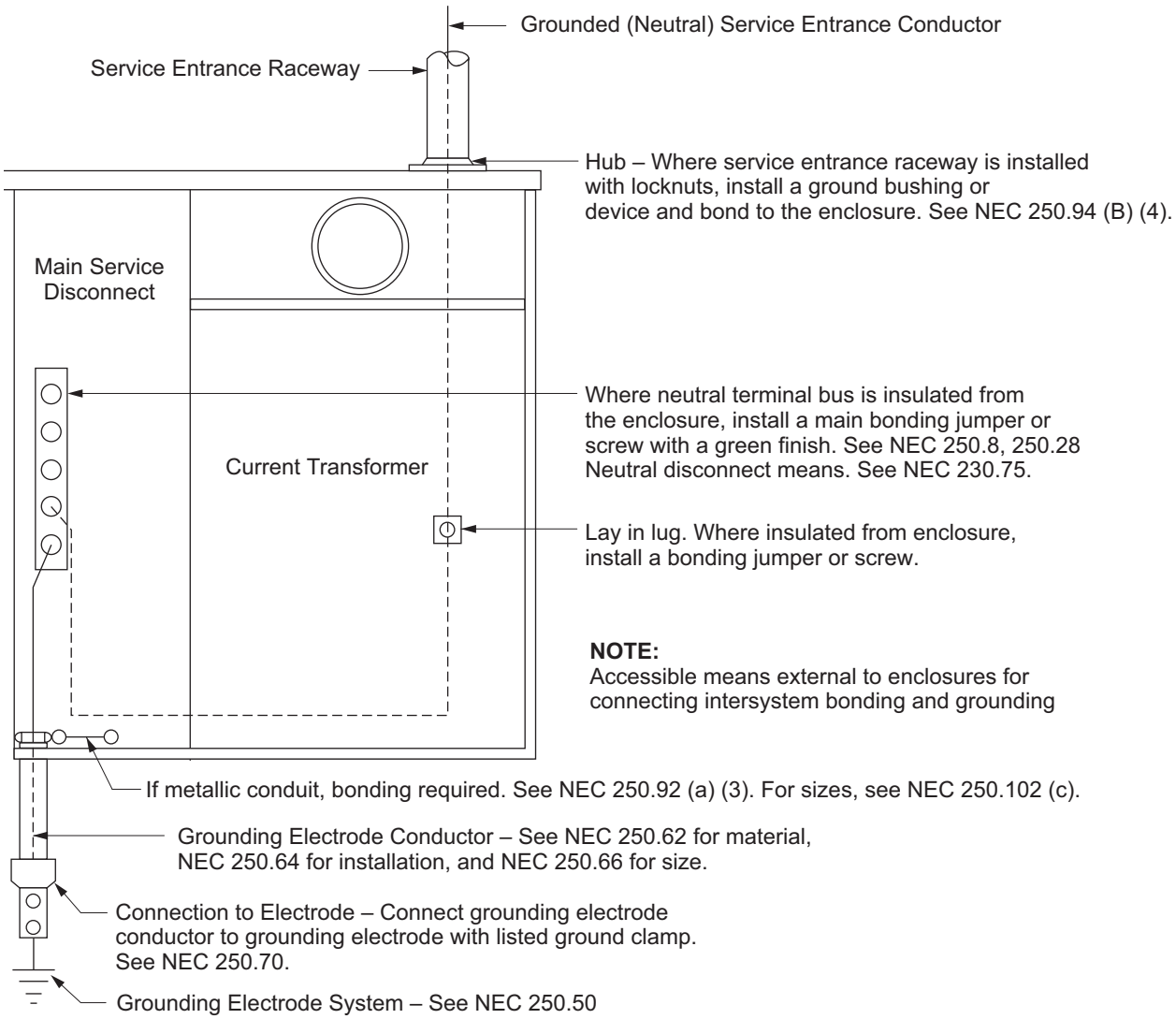

Figure 5–21: Single-Meter Commercial Service with a Neutral (Where a Main-Disconnecting Means Is Required)

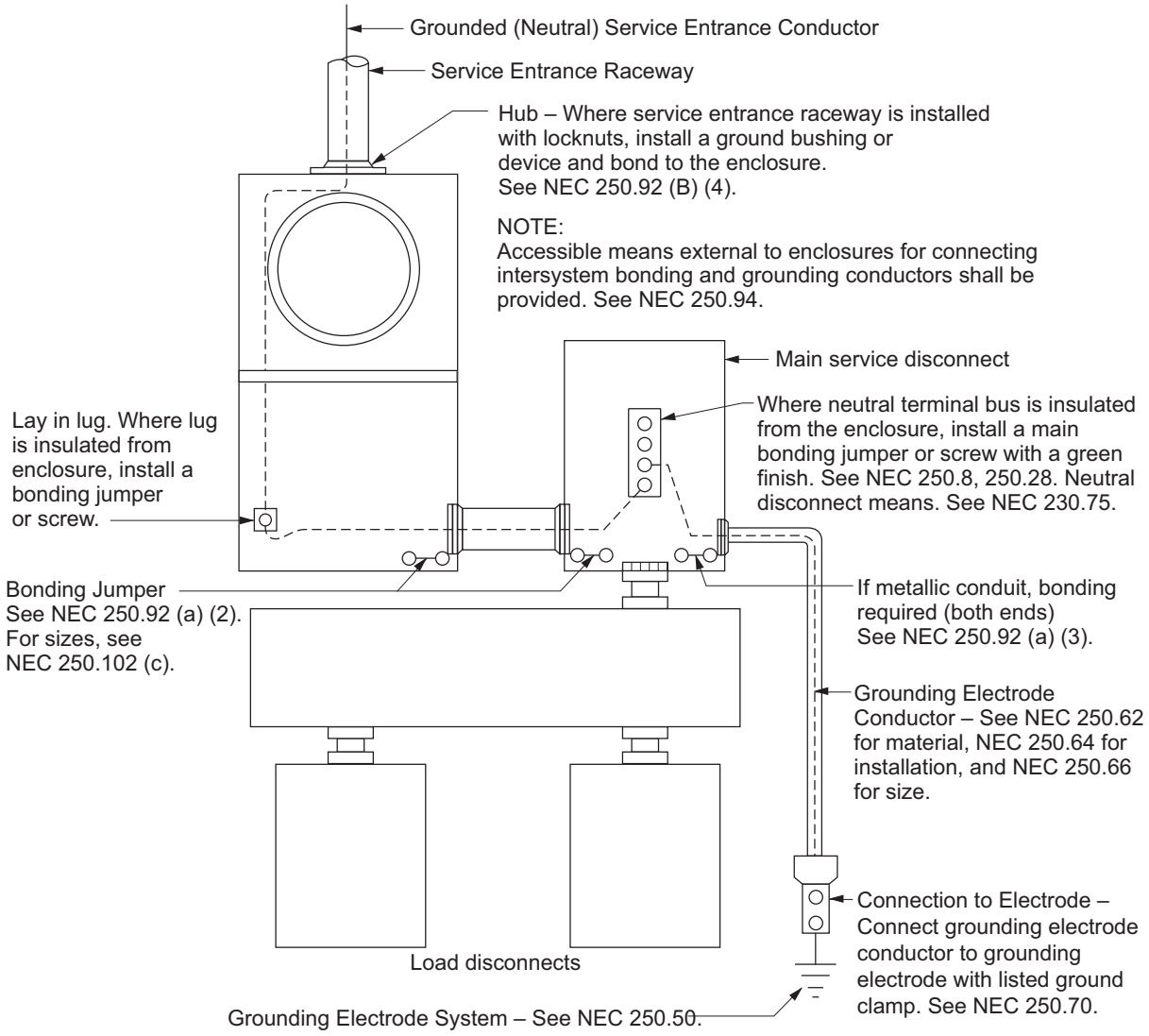

Figure 5–22: Three-Phase, Three-Wire Delta Service with Added Grounding Connector

Figure Note: Serving utility ***must*** be consulted for service-transformer connections and transformer grounding to determine appropriate equipment ratings/application.

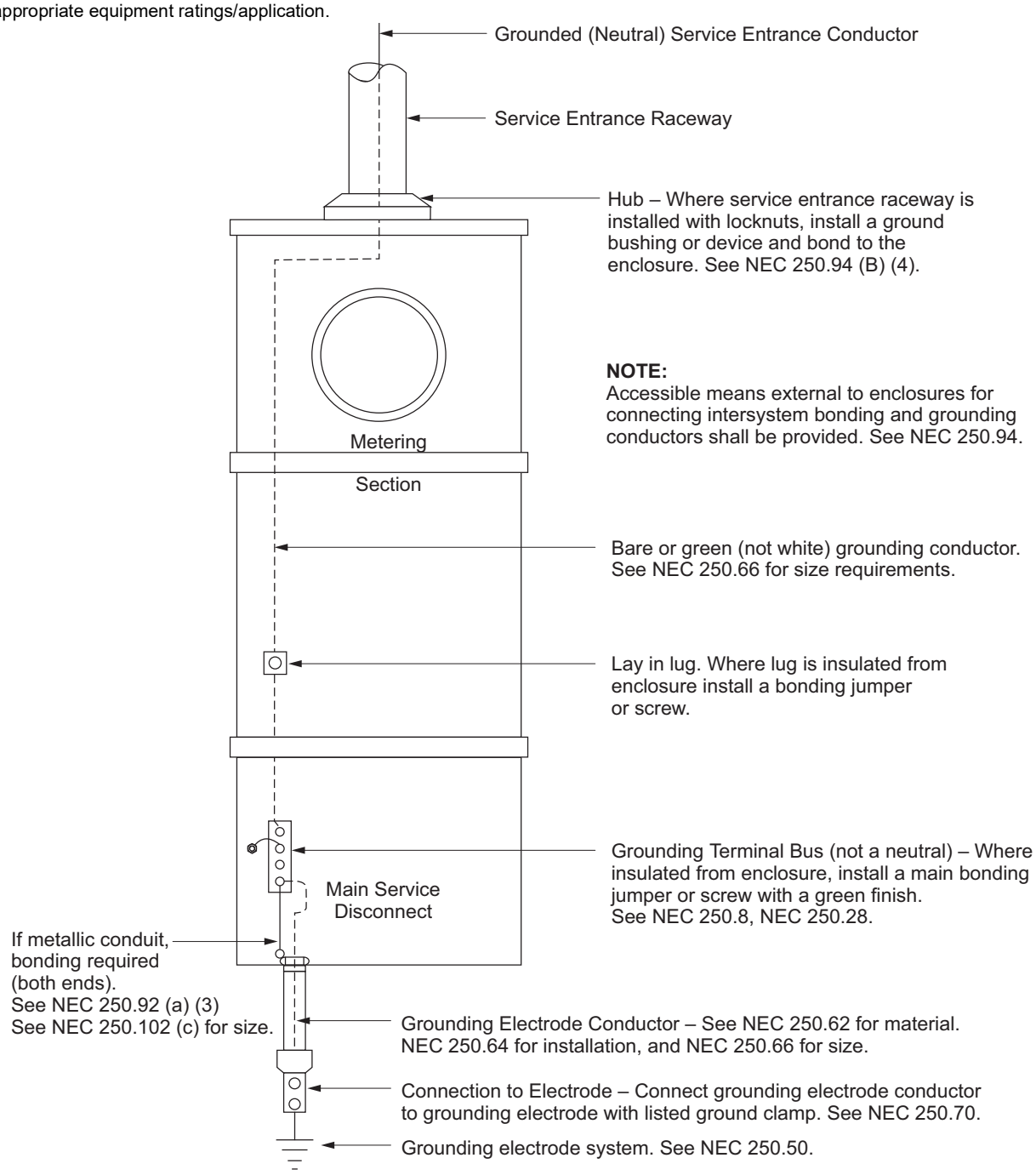

Figure 5–23: Commercial Service, Overhead Supply — Six Subdivisions or Less

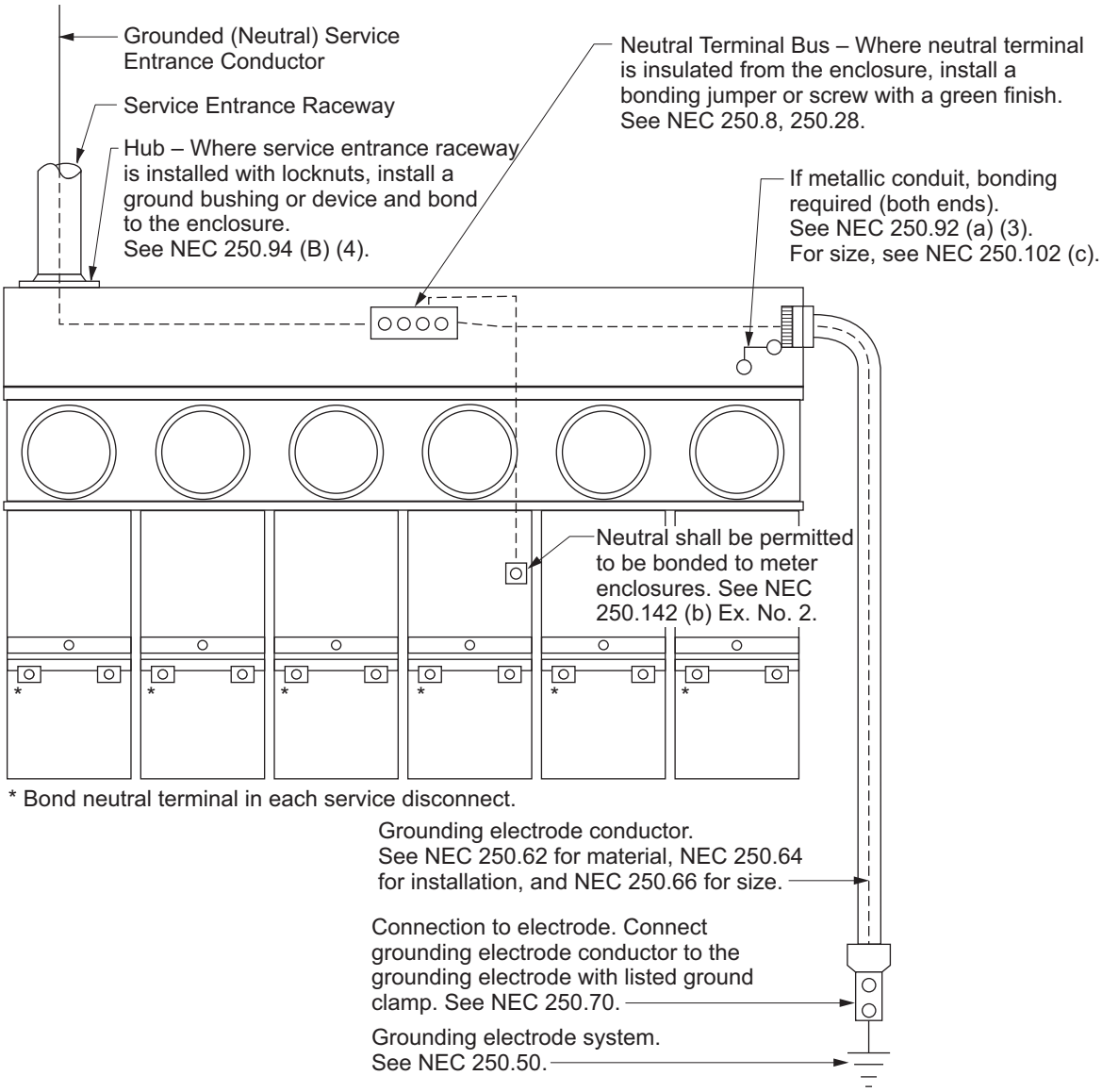

Note(s):

1. Accessible means external to enclosures for connecting intersystem bonding and grounding conductors shall be provided. See NEC 250.94.
2. Main breaker/disconnect shall have lockable means.

Figure 5–24: Commercial Service, Overhead Supply — More than Six Subdivisions of Service

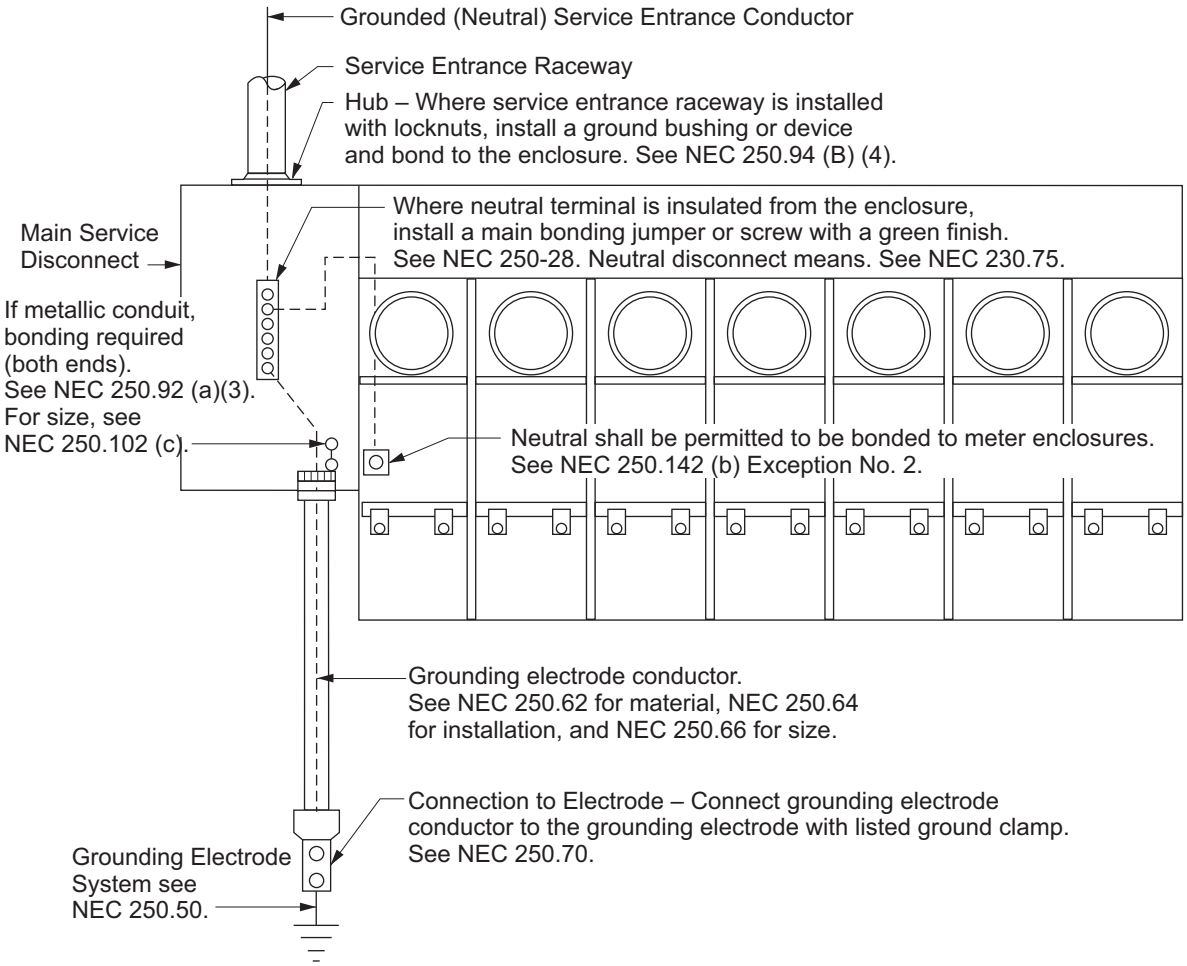

Note(s):

1. Accessible means external to enclosures for connecting intersystem bonding and grounding conductors shall be provided. See NEC 250.94.
2. Main breaker/disconnect shall have lockable means.

Figure 5–25: Combination Meter and Service for Underground Dwelling Service

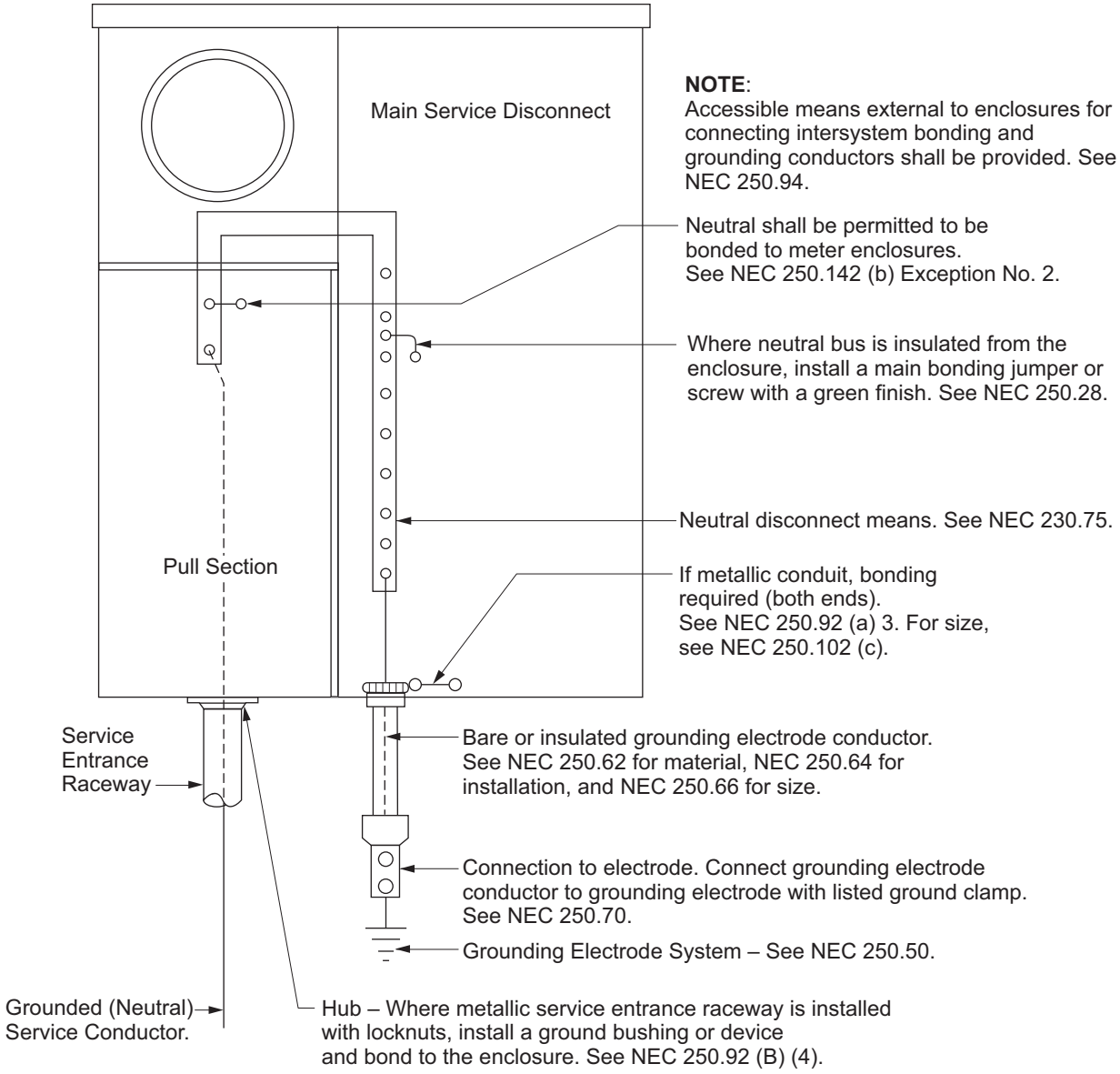

Figure 5–26: Combination Meter and Service for Underground Multi-Family Dwelling Service — Six Subdivisions of Service or Less

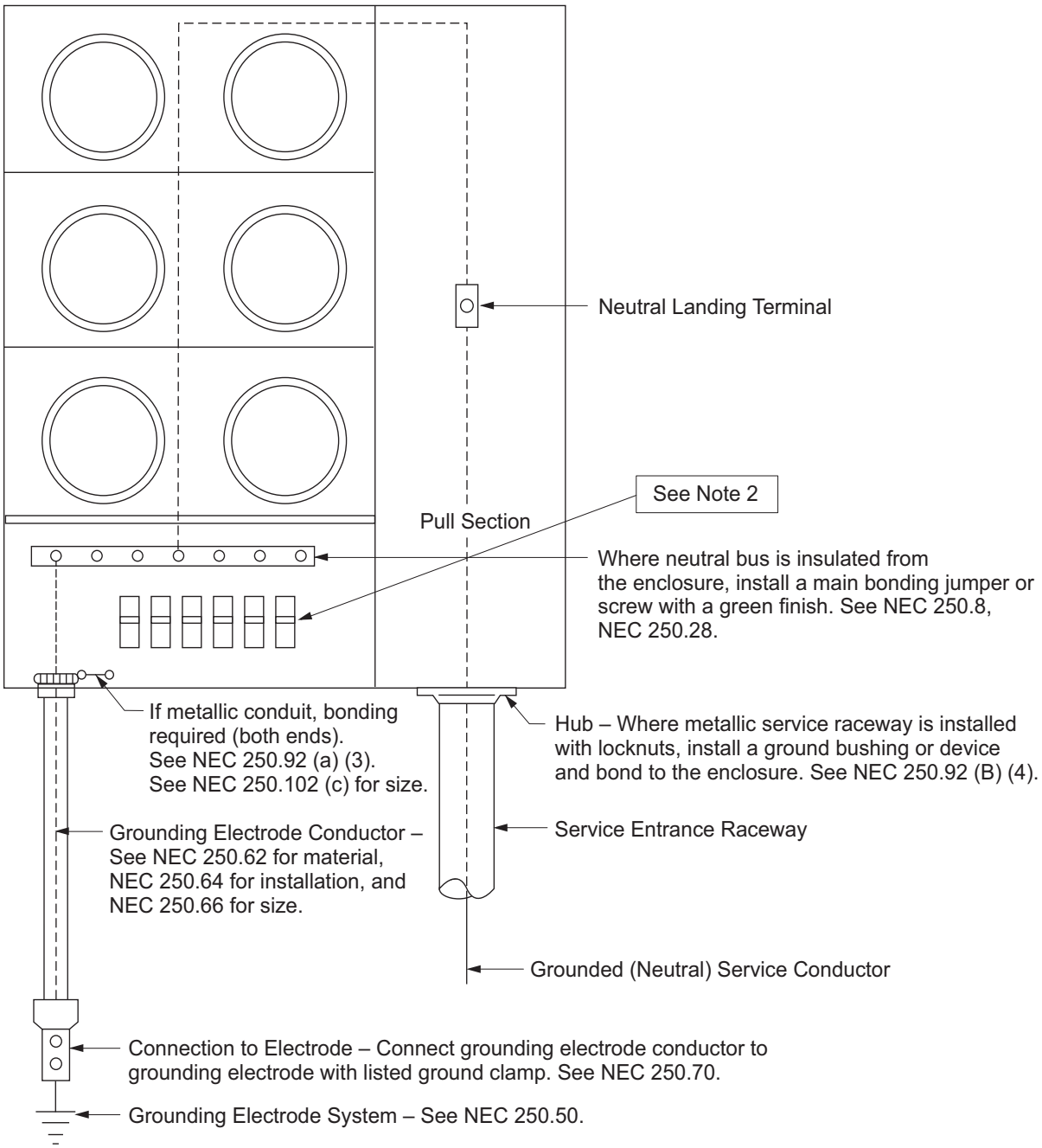

Note(s):
1. Accessible means external to enclosures for connecting intersystem bonding and grounding conductors shall be provided. See NEC 250.94.
2. Main breaker/disconnect shall have lockable means.

Figure 5–27: Combination Meter and Service for Underground Multi-Family Dwelling Service — More than Six Subdivisions

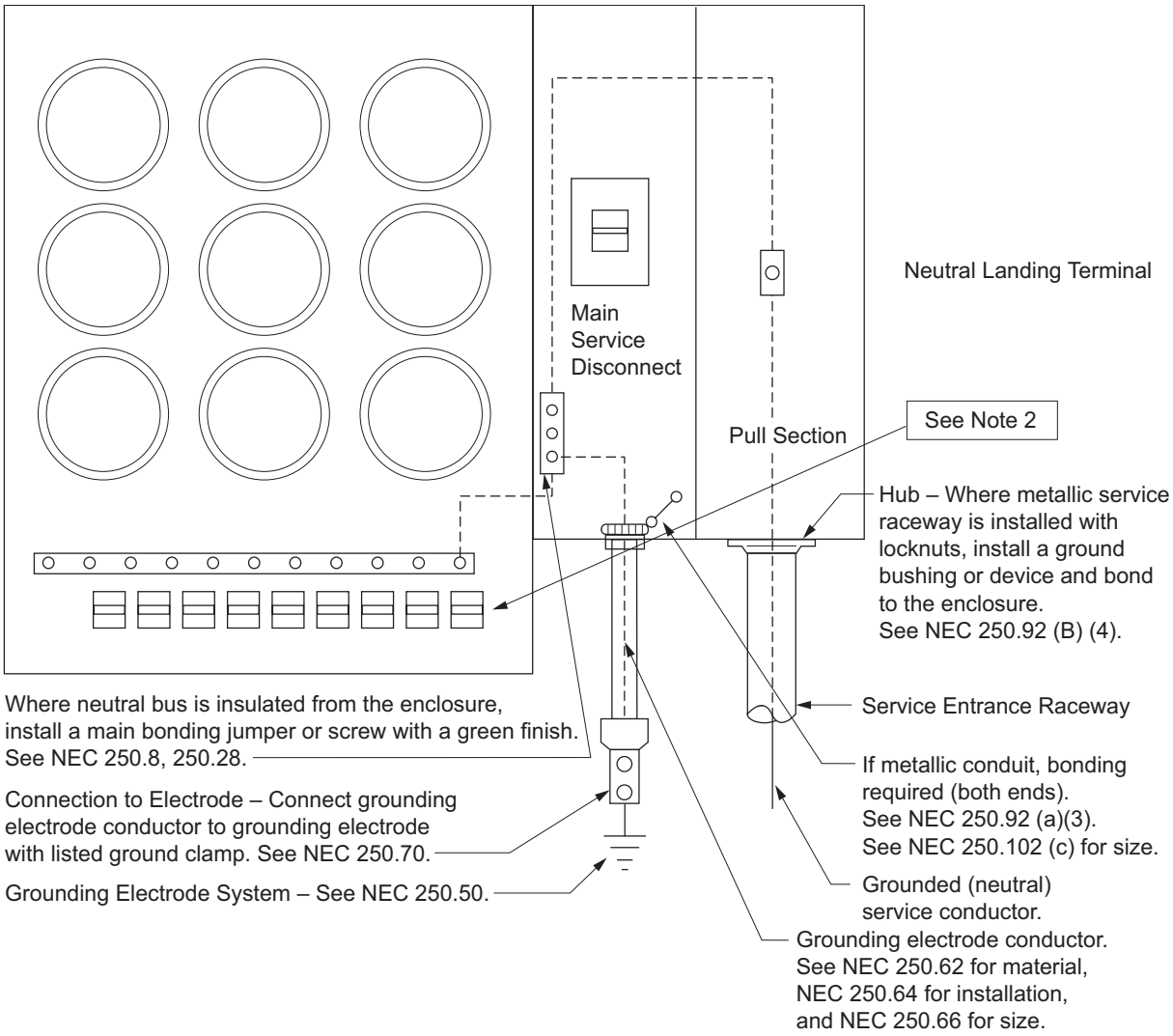

Note(s):
1. Accessible means external to enclosures for connecting intersystem bonding and grounding conductors shall be provided. See NEC 250.94.
2. Main breaker/disconnect shall have lockable means.

Figure 5–28: Combination Meter and Service for Underground Commercial Service — Six Subdivisions or Less

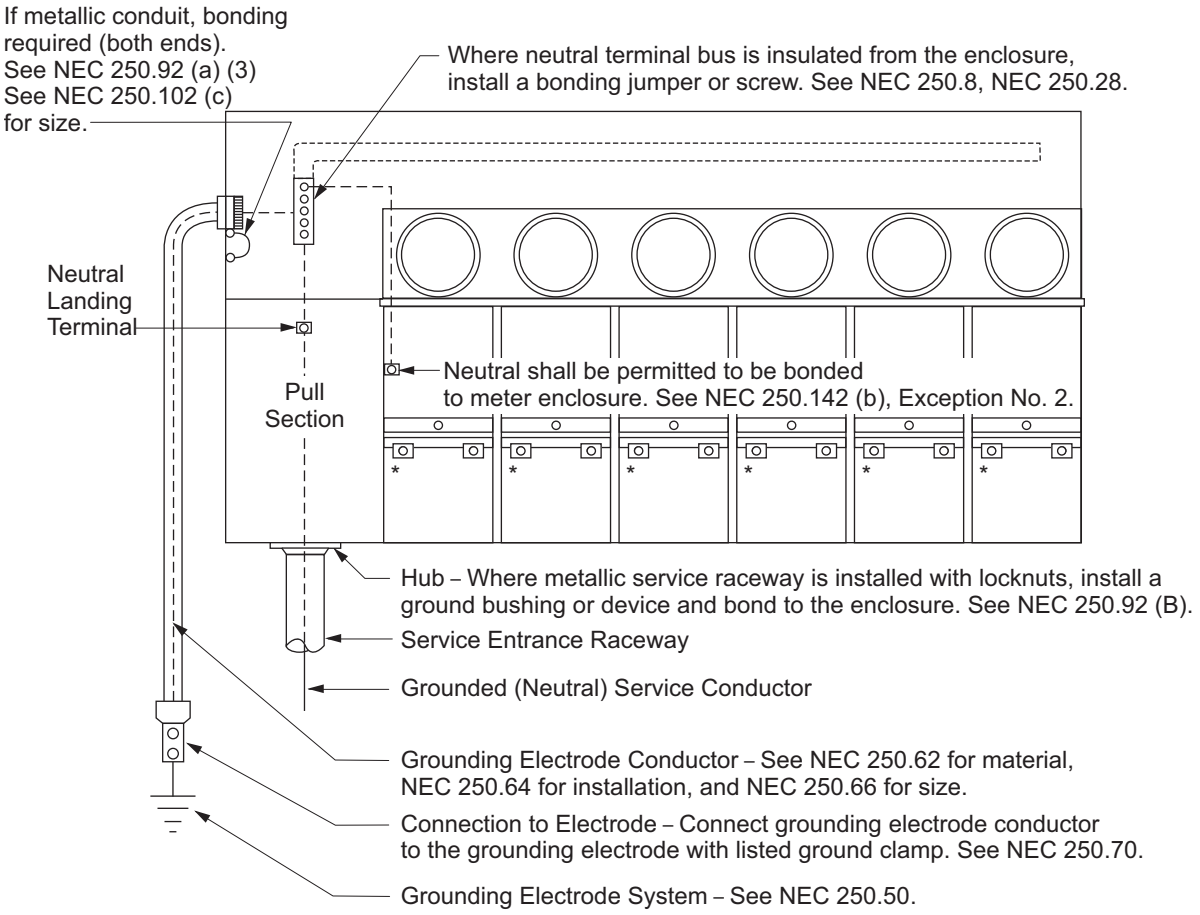

* Bond neutral terminal in each service disconnect.

Note(s):
1. Accessible means external to enclosures for connecting intersystem bonding and grounding conductors shall be provided. See NEC 250.94.
2. Main breaker/disconnect shall have lockable means.

Figure 5–29: Combination Meter and Service for Underground Commercial Service — More than Six Subdivisions of Service

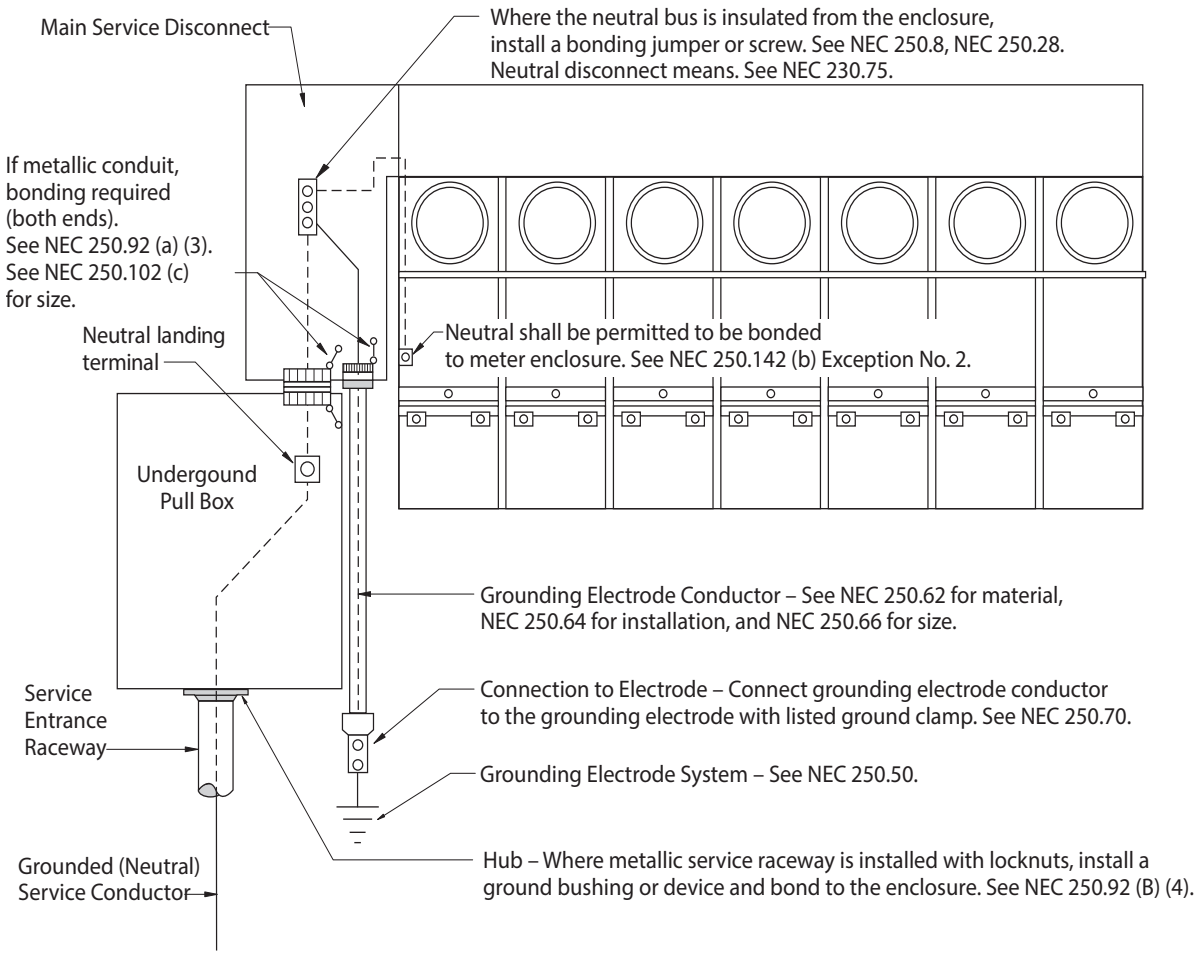

Note(s):

1. Accessible means external to enclosures for connecting intersystem bonding and grounding conductors shall be provided. See NEC 250.94.
2. Main breaker/disconnect shall have lockable means.

Figure 5–30: Switchboard Service Section

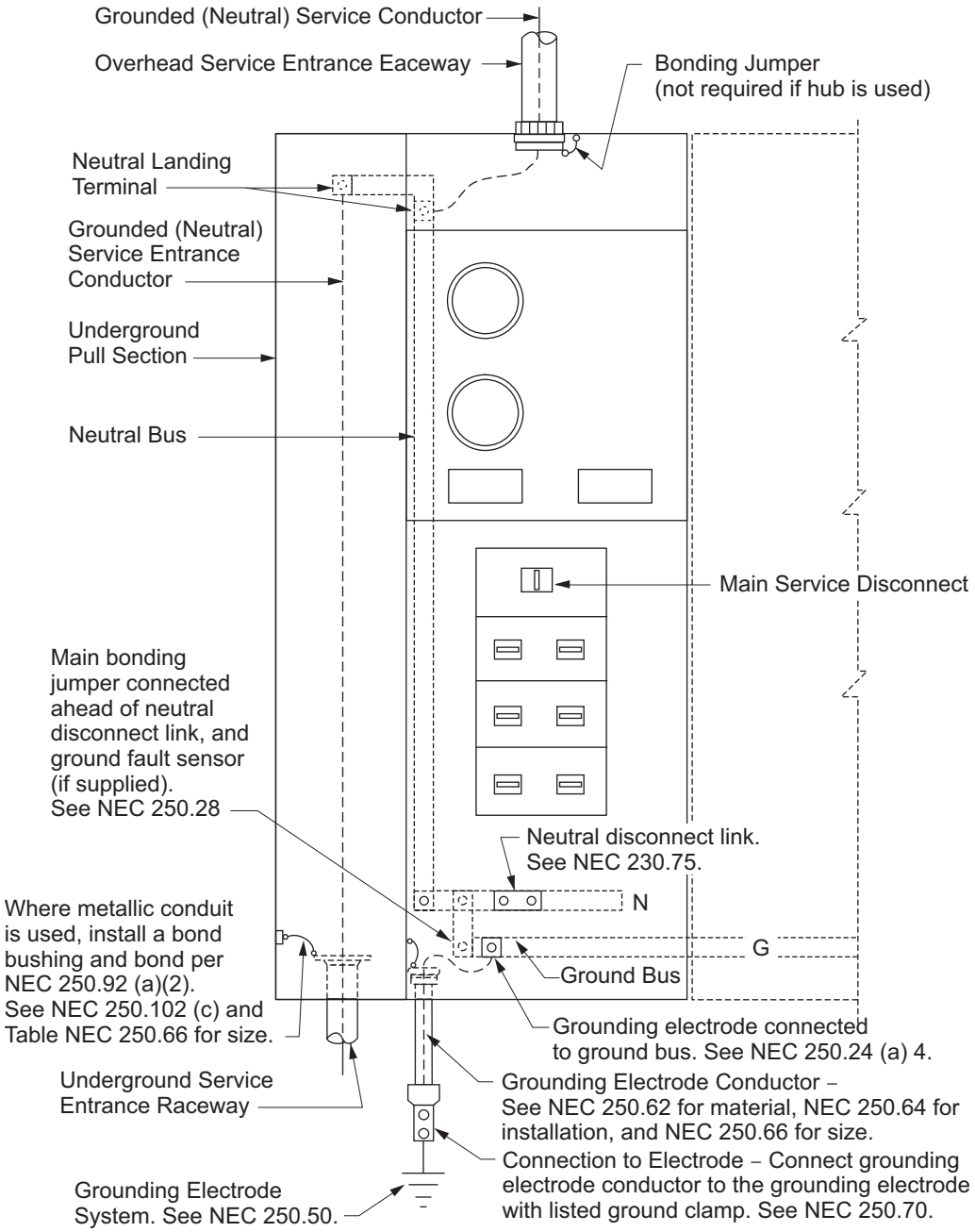

Figure 5–31: Underground Service Post

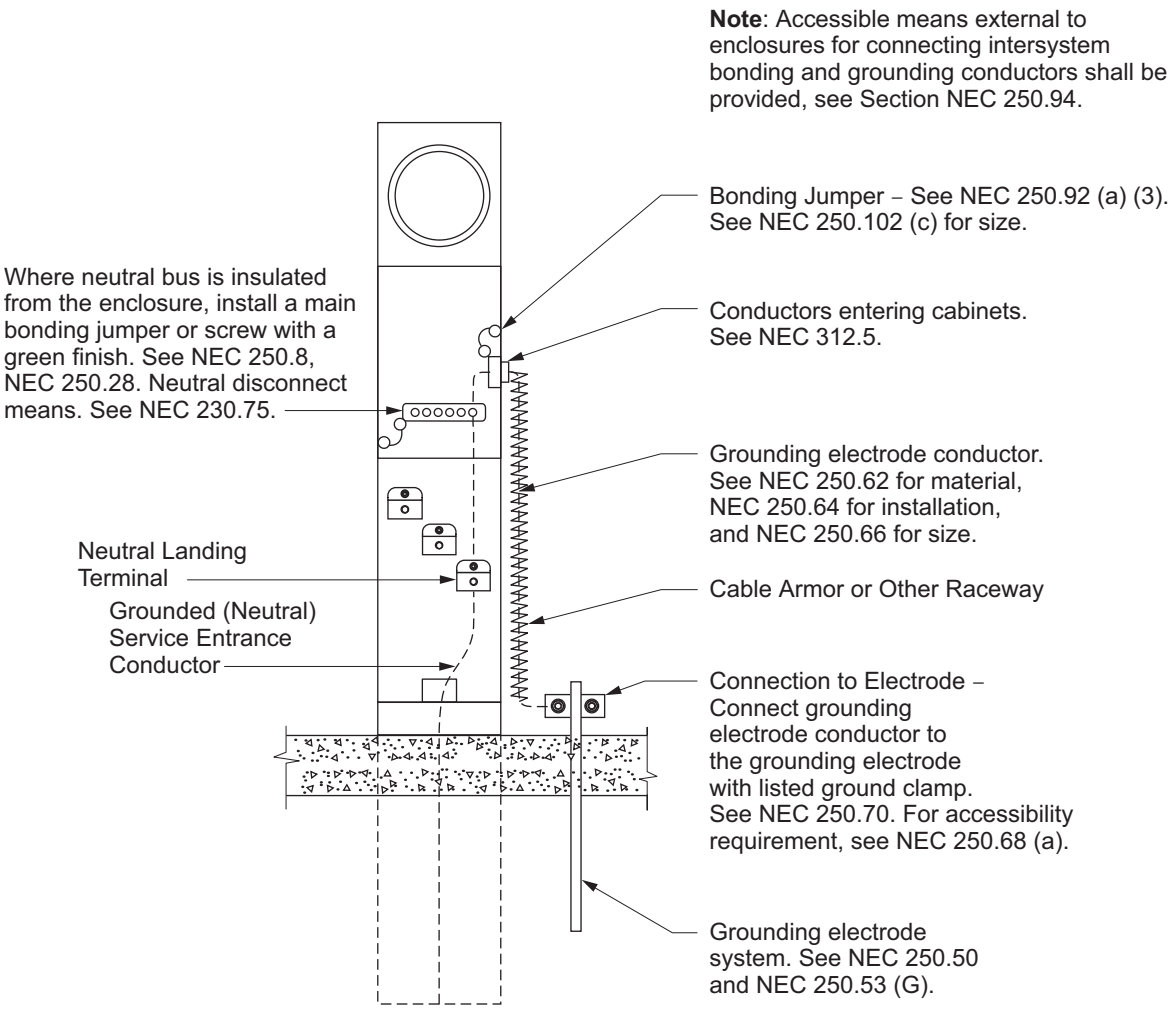

Figure 5–32: Concrete-Encased Electrode (Ufer Ground)

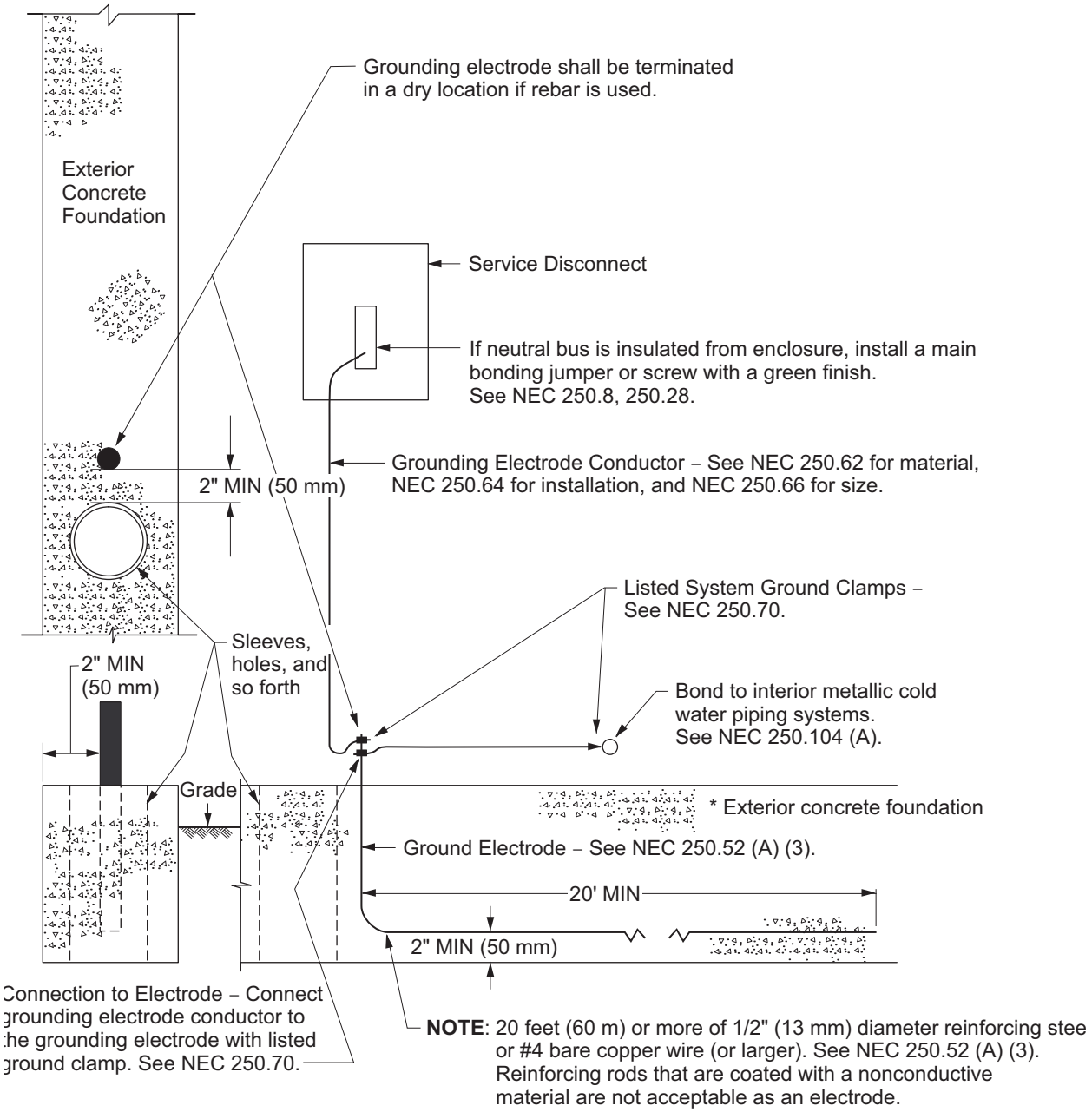

Figure 5–33: Typical Single-Phase Customer's Transformer Bonding and Grounding

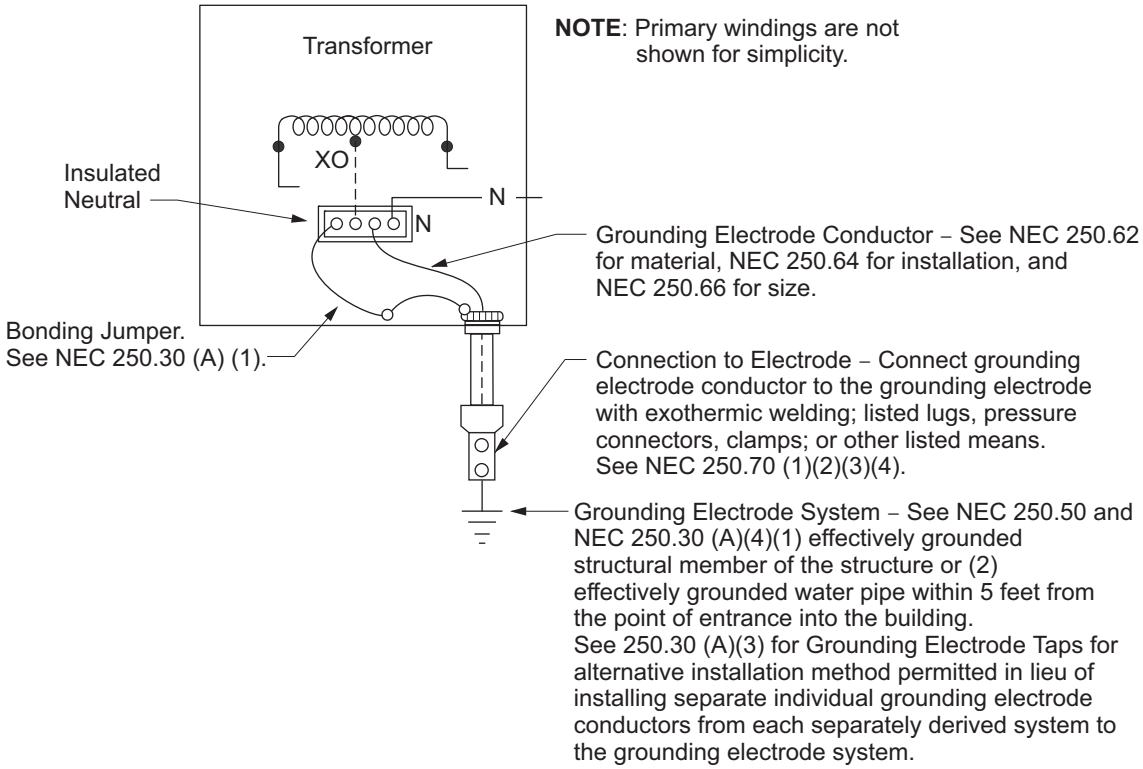

Notes:
1. For simplicity, primary windings are not shown.
2. Grounding and bonding connections as shown above are permitted to be made at any point between the transformer secondary and the first disconnecting means. See NEC 250.30 (A) (1) and (2). Exception No.1 permits bonding at both source and first disconnecting means if no parallel path is established for grounded circuit conductor. Earth is not considered a parallel path.

Figure 5–34: Typical Three-Phase — Four-Wire Wye — Customer's Transformer Bonding and Grounding

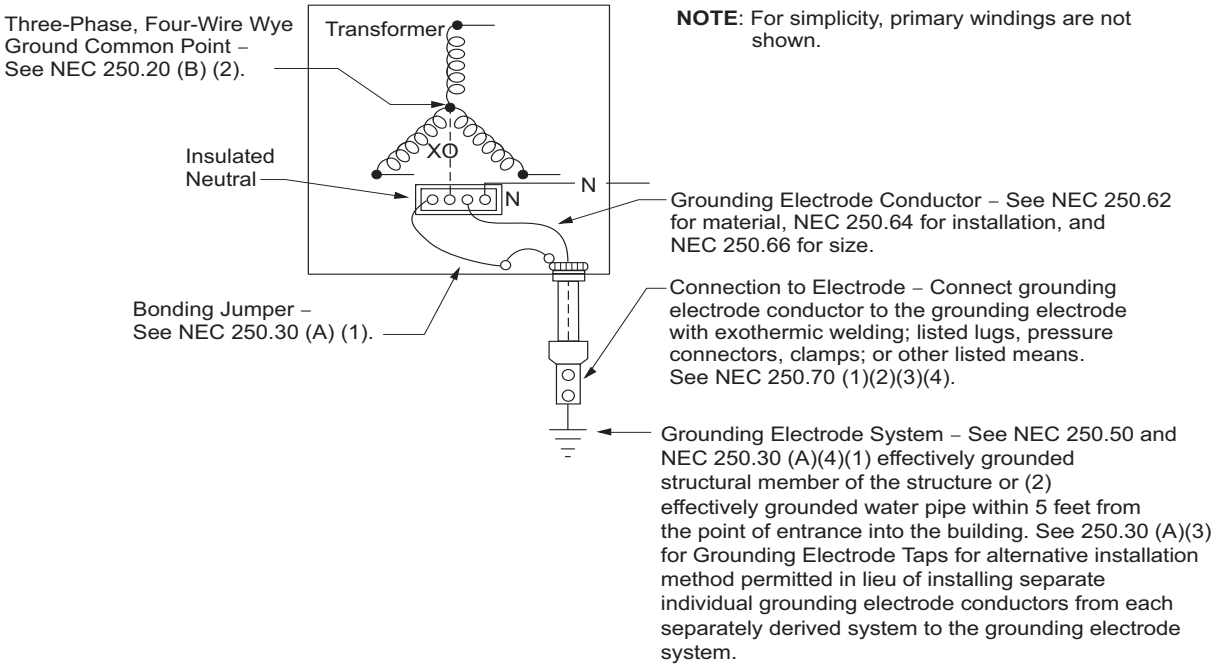

NOTE: For simplicity, primary windings are not shown.

Notes:
1. For simplicity, primary windings are not shown.
2. Grounding and bonding connections as shown above are permitted to be made at any point between the transformer secondary and the first disconnecting means. See NEC 250.30 (a) (1) and (2), Exception No.1, permits bonding at both source and first disconnecting means if no parallel path is established for grounded circuit conductor. Earth is not considered a parallel path.

Figure 5–35: Typical Three-Phase — Four Wire Delta — Customer's Transformer Bonding and Grounding

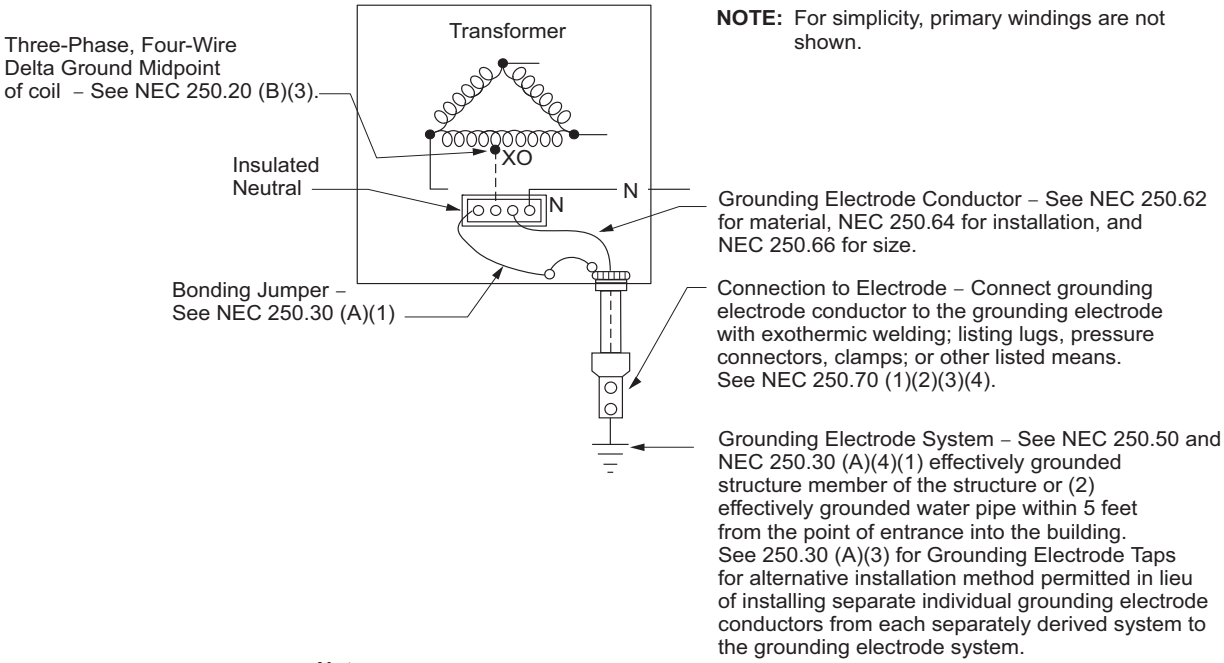

NOTE: For simplicity, primary windings are not shown.

Notes:
1. For simplicity, primary windings are not shown.
2. Grounding and bonding connections as shown above are permitted to be made at any point between the transformer secondary and the first disconnecting means. See NEC 250.30 (A)(1) and (2), Exception No.1, permits bonding at both source and first disconnecting means if no parallel path is established for grounded circuit conductor. Earth is not considered a parallel path.

Figure 5–36: High-Impedance Grounded Neutral System (NEC Section 250.36)

All of conditions (1), (2), (3), and (4) must be met:
(1) Qualified persons
(2) Continuity of power is required
(3) Ground detectors are installed
(4) No line-to-neutral loads are served

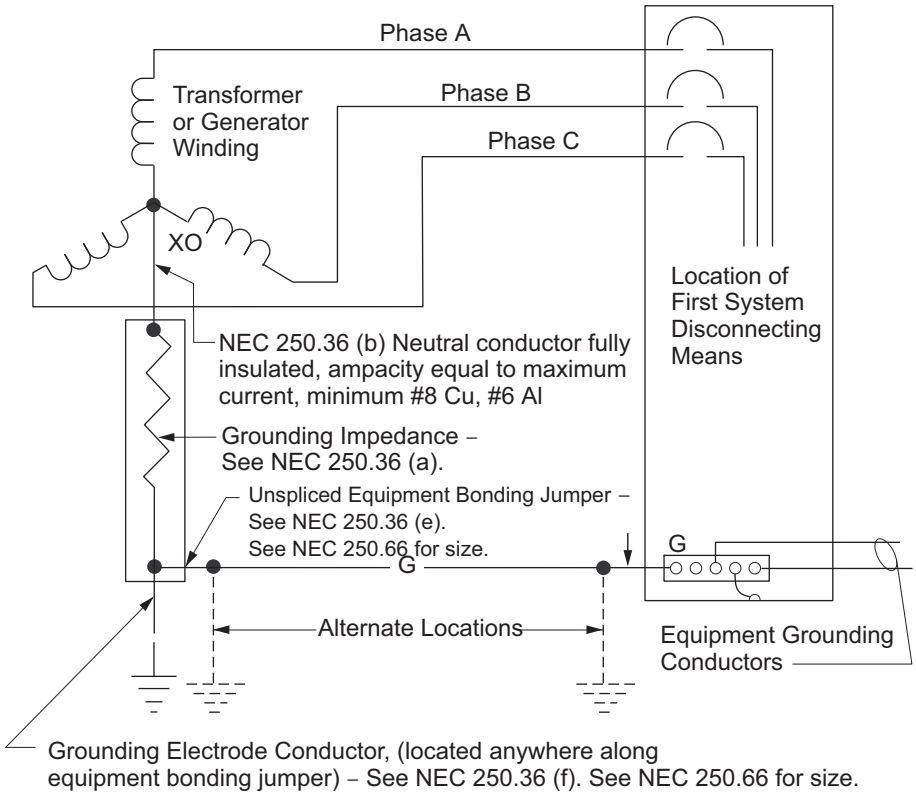

ESR–6: Switchboards – 600 V and Below

TABLE OF CONTENTS

SECTIONS AND SUBSECTIONS		PAGE
1.0	Switchboards — 600 V and Below	6–3
2.0	Grounding and Bonding	6–4
3.0	Instrument-Transformer Compartments	6–4
4.0	Meters and Meter Panels	6–4
5.0	Totalized Services	6–5
5.1	General	6–5
5.2	Single-Phase Service	6–5
5.3	Three-Phase Service	6–5
5.4	Software Totalized Metering	6–5
6.0	Overhead Service Connections	6–5
7.0	Underground Service Connections	6–5
8.0	Moisture	6–6
9.0	Service Entrance Conductors	6–6
10.0	Termination Points	6–6
11.0	Switchboard Locations	6–6
12.0	Ground Buses	6–6

FIGURES		
6–1	Standard Switchboard Service Section with Instrument-Transformer Compartment 0–600 V	6–7
6–2	Standard Switchboard Service Section with Instrument-Transformer Compartment and Filler Panel 0–600 V	6–8
6–3	Combination Switchboard Service Section and Pull Section 0–600 V, 2,000 A Maximum	6–9
6–4	Outdoor or Raintight Enclosures for Switchboards 0–600 V	6–10
6–5	Overhead Service Termination Standard Switchboard Service Section 0–600 V	6–11
6–6	Underground Service Terminating Facilities in Pull Boxes or Pull Sections 0–600 V	6–12
6–7	Underground Service Termination Standard Switchboard Service Section 400–4,000 A, 0–600 V	6–14
6–8	Instrument-Transformer Compartment for Switchboards 0–1,000 A Maximum — 0–600 V, Single-Phase or Three-Phase, Three-Wire	6–17
6–9	Instrument-Transformer Compartment for Switchboards 0–1,000 A, 0–600 V, Three-Phase, Four-Wire	6–19
6–10	Instrument-Transformer Compartment for Switchboards 1,001–3,000 A, 0–600 V, Three-Phase, Four-Wire	6–21
6–11	Removable Link and Current-Transformer Support for Instrument-Transformer Compartments with 4-Inch Bus 0–600 V	6–23

6–12 15-Inch Hinged Meter Panel 0–600 V. 6–24

FIGURES **PAGE**

6–13 Instrument-Transformer Compartment for Switchboards 3,001–4,000 A, 0–600 V, Three-Phase, Four-Wire 6–25
6–14 Removable Link and Current-Transformer Support for Instrument-Transformer Compartments with 5-Inch Bus 0–600 V 6–27
6–15 Self-Contained Meters Installed in Switchboards 0–200 A, 0–600 V 6–28
6–16 Clearances for Residential Multiple-Metering Installations 6–29
6–17 30-Inch Hinged Dual-Socket Meter Panel 0–600 V 6–30

TABLES

6–1 Minimum Pull Section Dimensions 6–15
6–2 Number of Service Conduits for Commercial/Industrial Underground Pull Sections 6–16
6–3 Maximum Allowable Bus Size 6–25
6–4 Clearances for Residential Multiple-Metering Installation 6–29

1.0 Switchboards — 600 V and Below

The following requirements are intended to be in general agreement with the switchboard requirements of the Electric Utility Service Equipment Requirements Committee (EUSERC). Before any switchboard is fabricated or installed, the manufacturer shall submit three copies of the switchboard drawings to the local Service Planning Office for review and approval. See Table 6–1 for office locations.

For the purposes of these requirements, switchboard service sections are those sections containing an area for incoming service entrance conductors, instrument-transformer or test-bypass compartments, panels for mounting meters or associated equipment, and meter (service) switch(es), breaker(s) or main disconnect(s).

Switchboard service sections are preferred to externally operated (EXO) instrument-transformer cabinet installations. See ESR–5 for services rated 201 A through 400 A. Switchboard service sections are required for services in excess of 400 A. Self-contained multiple metering installations (maximum 200 A for each meter socket) may also be placed in switchboard service sections (see Figure 6–15 for details).

Any portion of a switchboard service section that can be removed to give access to unmetered service or service entrance conductors shall be sealable or made non-removable. Where a raceway for meter secondary wiring is required, access points to this raceway shall be sealable.

All side ports between any locations in service sections of switchboards (pull sections/meter sections, and so forth), except those occupied by service conductors, and all ports above the level of the main switch/breaker compartment, shall be completely barriered.

Conductors shall not be rerouted through any metering compartment. Fused and unfused conductors shall not occupy the same raceway unless they are completely barriered from each other in a manner acceptable to the Company.

On 120/240 V, three-phase, four-wire services, the power leg busing (208 V-to-ground) through pull sections and instrument-transformer compartments, shall be permanently identified by an orange-colored outer finish, or by other effective means. The power leg in an instrument-transformer compartment is the right-hand phase/bus position (C Phase). See ESR–5 for the proper socket terminals for each voltage classification.

On 240 V, three-phase services, the identified grounding conductor routed through the instrument-transformer compartment with the phase busing may be busbar or wire. Where wire is used, it shall be routed along the back of the instrument-transformer compartment and fastened in place. See ESR–5 for 240 V grounding details.

Every meter (service) switch or breaker for an individual meter rated at 600 V or less shall be on the load side (hot sequence) of the meter or metering equipment. A main disconnect shall be permitted on the line side (cold sequence) of a group of two-to-six meters and shall be required for a group of more than six meters (disconnects). See ESR–1 for meter switch location.

Equipment permitted to be connected ahead of the meter (service) switch or breaker by local codes or ordinances shall not be tapped ahead of metering or anywhere within an instrument-transformer compartment. Where a main disconnect is placed on the supply side of a group of meters, any equipment tapped ahead of the metering or disconnect shall be separately metered.

Except for conductors suppling the sealed utility compartments, no other conductors or devices shall be installed in, or routed through, the SCE sealed compartments.

2.0 Grounding and Bonding

See ESR–5 for grounding and bonding requirements.

3.0 Instrument-Transformer Compartments

Instrument-transformer compartments in switchboard service sections shall be fabricated in accordance with the following requirements:

Services	Amp	Page
Single- or three-phase, three-wire	Up to 1,000	Figure 6–8
Three-phase, four-wire	Up to 1,000	Figure 6–9
Three-phase, four-wire	1,001 to 3,000	Figure 6–10
Three-phase, four-wire	3,001 to 4,000	Figure 6–13

4.0 Meters and Meter Panels

All meter sockets shall be furnished and installed by the manufacturer. Screws used to mount cast meter sockets to hinged panels shall provide a 1/8-inch minimum clearance between the screw head and the back of the meter-socket ring. Meter-sockets installed on hinged panels shall be designed for back connection. See ESR–5 for meter-socket terminal arrangements.

The maximum meter-socket height measured from the center of the socket to the standing and working surface is 6 foot, 3 inches. The minimum height is 4 feet for exposed meters and 3 feet for enclosed meters or meters in meter rooms.

Meter panels shall be constructed of a minimum of 12-gauge steel and shall be hinged and sealable. Hinges shall be readily interchangeable, right or left, on the job site. Where clevis-type or removable pin-type hinges are used, provisions shall be made so that the pin can be removed from the top. Hinges must support the minimum of a 25-pound load applied to the unsupported end of the panel with a 1/8-inch maximum sag when open. Meter panels shall not be hinged to filler panels. Filler panels shall be hinged to provide a full access opening to the instrument-transformer compartment. Hinged panels shall be capable of being opened a full 90 degrees with all metering equipment in place. Enclosed meter panels may require wider access openings to permit 90-degree opening (see Figure 6–4).

Meter panels fabricated in accordance with Figure 6–17 shall be provided for service sections rated as follows:

120/208 V	—	800 A and above
240 V	—	600 A and above
277/480 V	—	400 A and above

All other service sections shall have meter panels fabricated in accordance with Figure 6–12.

For meter and meter panel requirements on self-contained, multiple-metering installations, see Figure 6–15.

5.0 Totalized Services

5.1 General

Totalized metering may be supplied to installations having a proposed main service switch in excess of the specified switch capacity (see Subsection 5.2 and Subsection 5.3 below). Approval of SCE must first be obtained as to the number and size of switches, circuits and related facilities. Such service will be supplied from two or three separate switchboard service sections at one location.

When two or more switchboard service sections are required to be totalized using a hard wire method, the metering shall be fed from a single-transformer bank or pad-mounted transformer, and their instrument-transformer compartments shall not be more than 20 feet apart (unobstructed walking distance). The customer shall provide and install a 1-1/4-inch conduit run between instrument-transformer compartments to be totalized. Meter panels on totalized switchboard sections shall be fabricated in accordance with Figure 6–12 unless otherwise specified. Consult the local Service Planning Office for requirements.

5.2 Single-Phase Service

Normally for 120/240 V or 240 V service, the maximum meter switch rating is 400 A. Under certain operating conditions, permission may be granted for installation of 600 A service equipment for an individual 120/240 V or 240 V load. Otherwise, two or more separate 400 A switchboard service section installations may be required and software totalized metering will normally be available.

5.3 Three-Phase Service

The maximum main switch capacity allowed for 120/208 V, or 277/480 V, three-phase is 4000 A of connected load. When capacity exceeding 4000 A is required, two or more services may be installed with totalized metering.

5.4 Software Totalized Metering

Software totalized metering may be supplied only with Meter Services Organization (MSO) engineering approval where there is more than one transformer bank or pad-mounted transformer serving separate circuits or the switchboard distance from one another is greater than 20 feet. Consult the local Service Planning Office for requirements.

6.0 Overhead Service Connections

The service-entrance conductors from the point-of-service delivery to the point-of-attachment in the switchboard service section shall be furnished and installed by the customer (see ESR–2 and ESR–3 for details). The customer is responsible for terminating the service-entrance conductors to the switchboard bus.

7.0 Underground Service Connections

A separate terminating pull section, Figure 6–7, wall-mounted terminating pull box, ESR–3, shall be provided on every underground service from either an overhead or underground source. Terminating pull sections are preferred.

8.0 Moisture

Pull sections, pull boxes, and switchboard service sections shall be located so that any moisture that might enter the pull section or pull box from underground service conduits cannot run into the service section, either directly or through conduits/raceways. Where the service section is installed at a level lower than that of the service conduits, a blank pull section shall be installed in addition to the termination enclosure/section. Both ends of all conduits shall be sealed to prevent moisture from entering the termination enclosure/section. At no time may service-lateral conduit(s) terminate above service entrance bus or in a current-transformer compartment.

9.0 Service Entrance Conductors

Where the pull section or pull box is not attached to the switchboard service section, the customer shall furnish and install service-entrance conductors from the pull section or pull box to the service section. The customer is responsible for terminating the service-entrance conductors to the service-entrance or current-transformer bus (see Figure 6–7, Exhibit B).

10.0 Termination Points

Lug landings shall be provided in switchboard pull sections and wall-mounted pull boxes (see Figure 6–6 and Figure 6–7). The number of lug-landing positions required per phase will be designated by the Company. The Company will furnish and install terminating lugs on its service-lateral cables and attach same to the lug landings.

11.0 Switchboard Locations

Switchboards shall be located so that the meters have the required clearances from side walls, ceilings, and other obstructions, and so that the requirements of ESR–5 are complied with. See ESR–3 for additional requirements affecting terminating enclosures and switchboard locations.

12.0 Ground Buses

Ground Bus installed in the switchboards are allowed. However, the ground bus shall be located in the back, inside of the switchboard enclosure. No ground lugs or any other type of connections are permitted in the utility sections.

In applications where the manufacturer requires a main bonding jumper connection in the breaker section, the ground bus can be extended up to the main disconnect section. When using equipment as illustrated in Exhibit C (Figure 6–7), the bus bar shall enter the main disconnect / breaker section from the rear of the enclosure.

Figure 6–1: Standard Switchboard Service Section with Instrument-Transformer Compartment 0–600 V

EUSERC No. 325

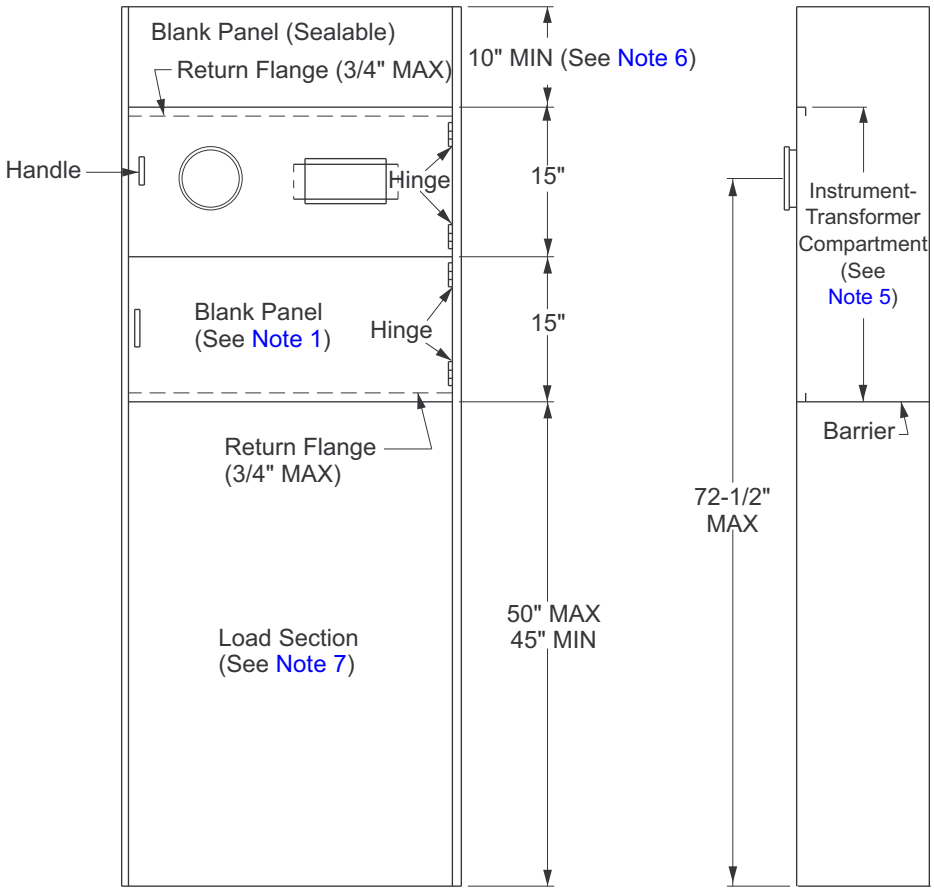

Front View **Side View**

Note(s):

1. Socket meter panel with blank meter panel shown. Consult the Company regarding alternate meter panel arrangements. Blank meter panel shall be constructed of 12 gauge (minimum) steel. See Figure 6–12 and Figure 6–17 for socket meter panel details.
2. Meter panels shall be equipped with stops to prevent inward swinging beyond the front surface of the service section.
3. Hinges shall be readily interchangeable, left or right, on the job site.
4. Removable or hinged panels enclosing unmetered bus or cable shall be sealable. All securing screws shall be captive.
5. For requirements regarding instrument-transformer compartments, see; 0-to-100 A Figure 6–8 and Figure 6–9, 1001-to-3000 A Figure 6–10, 3001-to-4000 A Figure 6–13.
6. Dimension may be reduced if the service section is supplied from horizontal cross-bussing or bus duct.
7. When used as utility-terminating section in a bottom-fed service section (see Figure 6–3).
8. For outdoor applications, see Figure 6–4 for weatherproof enclosure requirements.

Figure 6–2: Standard Switchboard Service Section with Instrument-Transformer Compartment and Filler Panel 0–600 V

EUSERC No. 326

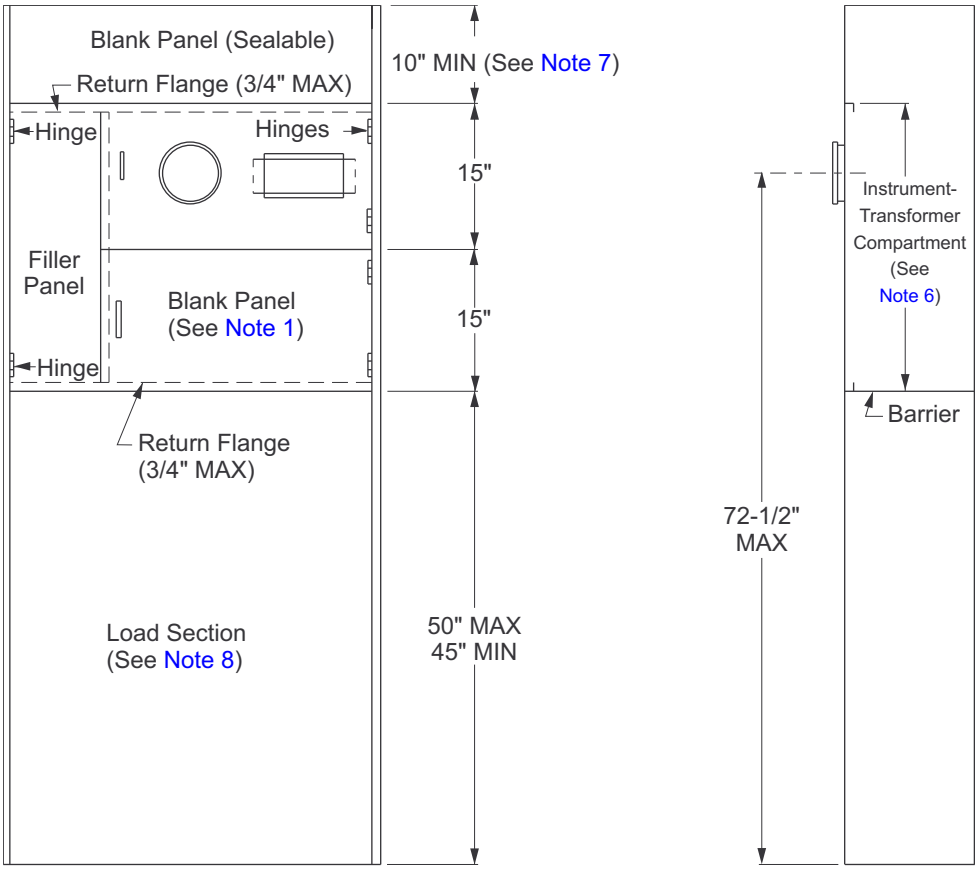

Front View **Side View**

Note(s):

1. Socket meter panel with blank meter panel shown. Consult the Company regarding alternate meter panel arrangements. Blank meter panel shall be constructed of 12 gauge (minimum) steel. See Figure 6–12 and Figure 6–17 for socket meter panel details.
2. Filler panels shall be used where the service section width exceeds the meter panel width. Meter panels, either socket or blank, shall not be hinged to hinged filler panels. Nonhinged filler panels shall not extend into the required instrument-transformer compartment access opening.
3. Meter panels and filler panels shall be equipped with stops to prevent inward swinging beyond the front surface of the service section.
4. Hinges shall be readily interchangeable, left or right, on the job site.
5. Removable or hinged panels enclosing unmetered bus or cable shall be sealable. All securing screws shall be captive.
6. For requirements regarding instrument-transformer compartments, see; 0-to-100 A Figure 6–8 and Figure 6–9, 1001-to-3000 A Figure 6–10, 3001-to-4000 A Figure 6–13.
7. Dimension may be reduced if the service section is supplied from horizontal cross-bussing or bus duct.
8. When used as utility terminating section in a bottom-fed service section, see Figure 6–3
9. For outdoor applications see Figure 6–4 for weatherproof enclosure requirements.

Figure 6–3: Combination Switchboard Service Section and Pull Section 0–600 V, 2,000 A Maximum

EUSERC No. 327

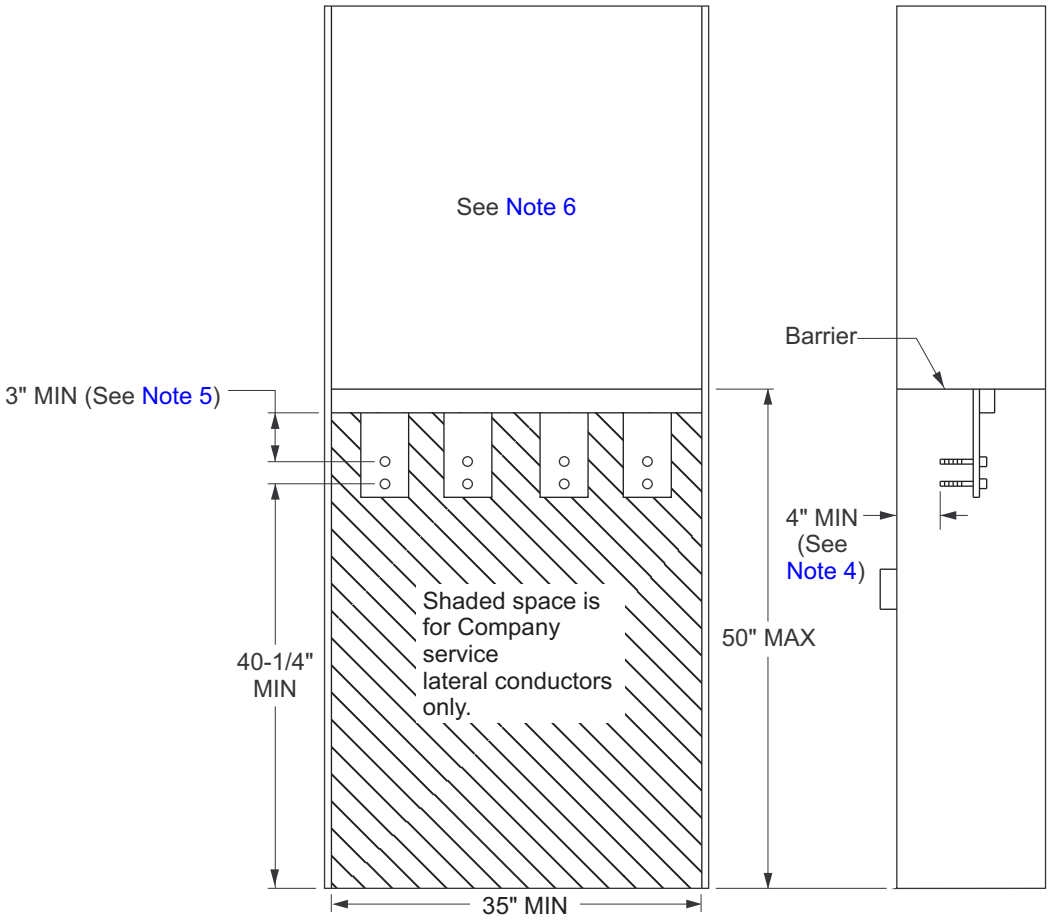

Front View **Side View**

Note(s):

1. The pull section may supply either a current-transformer compartment or a main service disconnect device.
2. Pull section covers shall be:
3. Independent of other equipment and removable without disturbing adjacent panels.
4. Sealable, provided with two lifting handles, and limited to a maximum of nine square feet in area.
5. The pull section shall be equipped with terminating facilities complying with Figure 6–6. Terminating facilities shall be secured to prevent misalignment and shall be rigid without the installation of current transformers.
6. The clearance from the energized bus to the pull section removable access covers may be reduced if a safety barrier is provided by the manufacturer. For additional clearance and barrier requirements, see Note 9.
7. A vertical clearance of three inches minimum shall be maintained between the centerline of the top bolts of the terminating facilities to any obstruction.
8. When the upper section is an instrument-transformer compartment, see Figure 6–2 for additional service-section requirements. When the upper section is a main service disconnect device a full width and depth, insulated, rigid barrier shall be provided to separate the pull section and main service-disconnect compartment. In addition, the main service disconnect cover shall be sealable.
9. Sealing provisions for removable covers shall consist of two drilled stud and wing-nut assemblies located on opposite sides of the cover. Hinged covers shall be sealed on the unsupported side. All security screws shall be captive.
10. The minimum pull section access opening width is measured between the left side and right side return flanges.

Figure 6–4: Outdoor or Raintight Enclosures for Switchboards 0–600 V

EUSERC No. 354

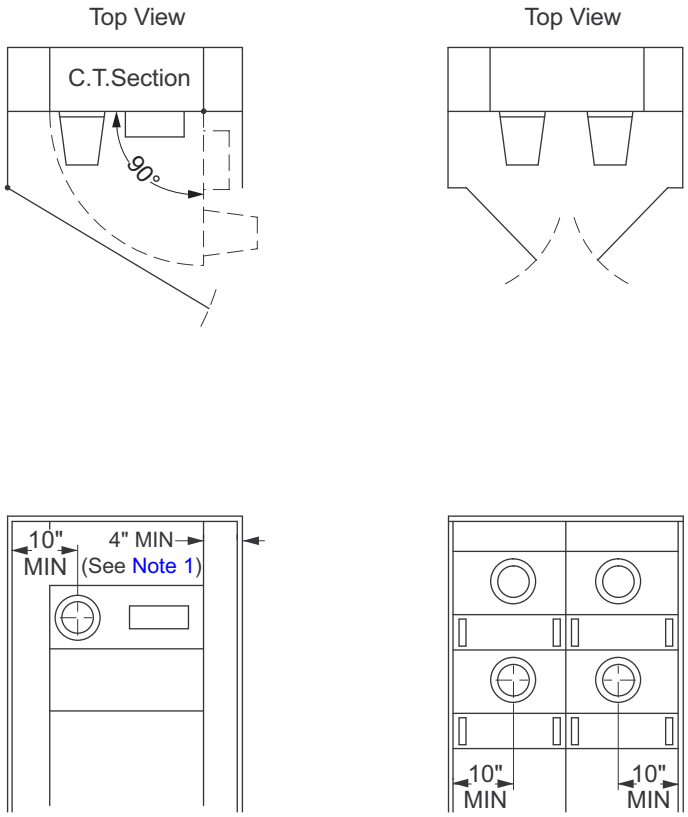

Front View
Exhibit A

Front View
Exhibit B

Note(s):

1. Hinged meter panels shall be capable of being opened 90 degrees with meter and test facilities in place, and provide the following clearances to any obstruction: 11 inches at the meter socket and 4 inches at the test-switch slotted opening. See Figure 6–12 and Figure 6–17 for hinged meter panels construction details.
2. Meter panels, either socket or blank, shall not be hinged to a hinged filler panel. Non-hinged filler panels shall not extend into the required instrument-transformer compartment access opening.
3. Enclosure doors providing access to utility compartments (for example, metering sections and pull sections) shall be:
4. Equipped with a device to secure the doors in the open position at 90 degrees or more.
5. Secured in the closed position with a single, handle-operated, latching system. When provided with a locking means, each door, or set of doors, shall be equipped with an approved double-locking device, accepting padlocks with a 5/16-inch lockshaft, to allow access by both the Company and the customer.
6. Dimensions may be reduced if the service section is supplied from horizontal cross-bussing or bus duct.

Figure 6–5: Overhead Service Termination Standard Switchboard Service Section 0–600 V

EUSERC No. 348

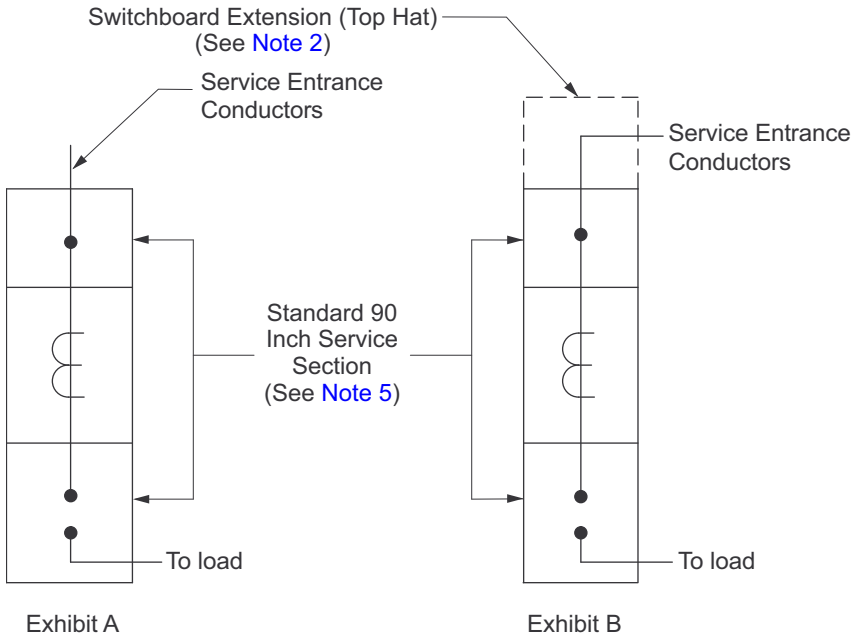

Note(s):

1. The service-entrance conductors, Exhibit A or Exhibit B, either cable or bus bar, are furnished and installed by the customer in the following manner:
   a. When switchboards are served through bus bar conductors, the conductors shall enter through the top, or at the side or back in the upper 10-inch section.
   b. When switchboards are served through cable conductors, the conductors shall enter through the top of the board only, as shown in Exhibit A
2. When the Company or customer requires incoming conduits from the side or rear for the service conductors, an extension as shown in Exhibit B, or other special designed termination may be required. Consult the local Service Planning Office for the extension dimension.
3. The direction of feed is from top-to-bottom in the standard switchboard service section. Load conductors shall leave below the metering compartment and may not be routed back through the current-transformer compartment in order to exit the service section.
4. Service-entrance conductors shall be connected to the busing in the service section by the customer with lugs approved for the type conductors used.
5. For information on the standard 90 inch service section see Figure 6–1 or Figure 6–2.

Figure 6–6: Underground Service Terminating Facilities in Pull Boxes or Pull Sections 0–600 V

EUSERC No. 347

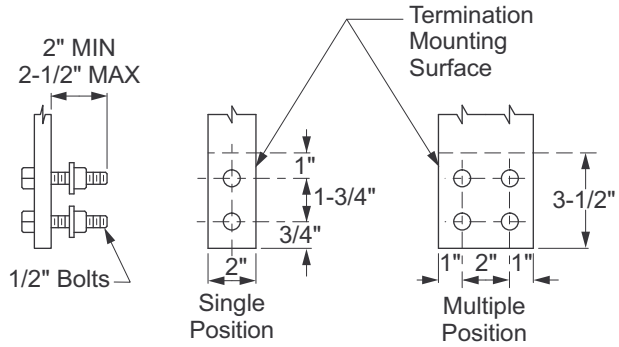

Exhibit A
Terminating Bolt and Drilling Detail
of Terminating Facilities

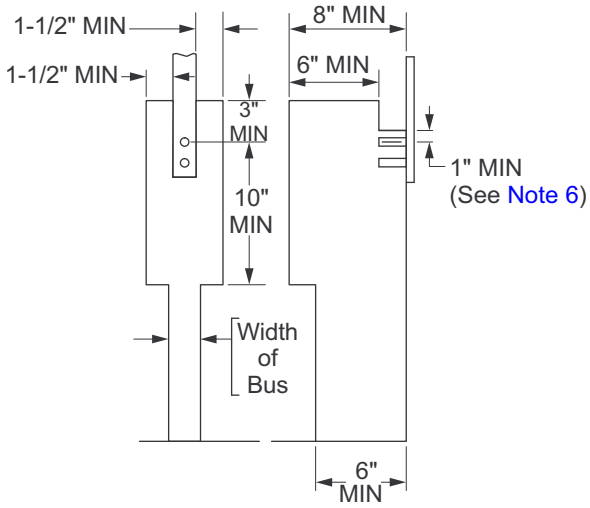

Exhibit D
Required Unobstructed Working Space
for all Terminations

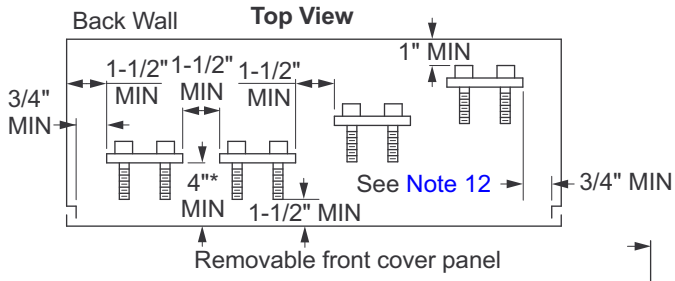

Exhibit B
Spacing Requirements for Terminating
Facilities (Side-by-Side, or Staggered)

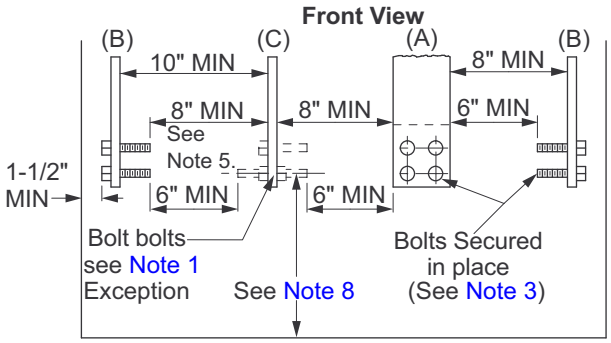

Exhibit C
Spacing Requirements for Terminating
Facilities Accessible from
(A) Front Only, (B) One Side Only, or (C) From Either Side
(See Note 3 and Note 4)

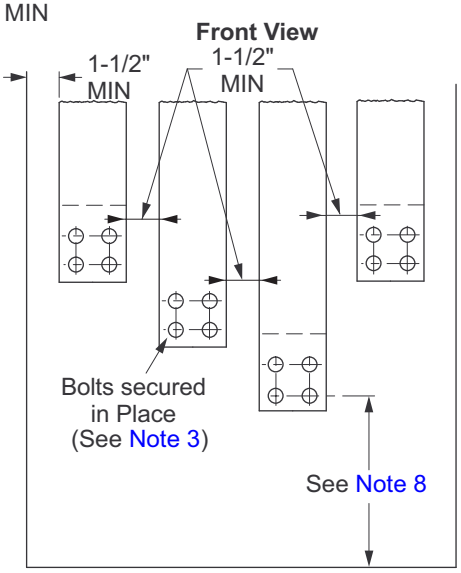

Exhibit E
Spacing requirements for top to bottom
stagger of terminating facilities 4-inch MIN required.
Assures 1-inch MIN clearance from body
of terminating lug (when in place)

Note(s):

1. One landing position is required for each 400 A of service ampacity up to 1200 A. Consult local Service Planning Office for services exceeding 1200 A. Each landing position shall consist of two 1/2-inch steel bolts spaced on 1-3/4 inches vertical centers and extending from 2 inches to 2-1/2 inches maximum from the mounting surface. When multiple positions are required, provide a minimum of 2 inches of horizontal spacing between positions.

Exception: Edgewise terminating facilities may consist of 9/16-inch holes having the same spacing as specified for the 1/2-inch bolts as specified above and in Exhibit A. The unobstructed working space shall be provided on both sides of the termination bus, see Exhibit C.

2. Each terminating bolt shall be provided with a spring washer and a nut. The spring washer may be either a cone-type (Belleville) washer or a split-ring washer and a flat washer. All parts shall be plated to prevent corrosion. Terminating bolts shall not be used to secure the termination bus in place.
3. Terminating bolts must be secured in place. “Secured in place” means that the stud will not turn, back out, or loosen in any manner when tightening or loosening terminal nuts (including cross-threaded situations).
4. In the terminal mounting area, which is defined as the area of the terminating facilities shown in Exhibit A, a clear space (barrel of proximity) of 1-1/2 inches minimum is required around any terminating facility including its bolts and bolt heads, any other bus, any other terminating facility, or any grounded surface, except:
   a. The minimum clearance to the back of the pull section may be reduced to one inch.
   b. The minimum clearance to any fully insulated horizontal bus behind the terminating facility may be reduced to one (1) inch.
   c. The neutral terminating facility may have a minimum clearance of one inch from any grounded surface.
5. Each terminating facility shall have an unobstructed working space, accessible from the front of the pull section as viewed from the access-compartment opening, in front of the entire mounting surface as shown in Exhibit D.

   Exception: For terminating facilities with bolts facing the access opening as shown in Exhibit B, the required 1-1/2-inch side clearance (bus to access opening return flange) may be reduced to 3/4 inch.
6. The clearance directly above and measured from the center of the top termination bolt may be reduced to one inch to either an insulated surface or bus of the same potential.
7. No more than one termination facility may be mounted along any sidewall.
8. See ESR–3 and ESR–3, Figure 3–7 through ESR–3, Figure 3–9 and Figure 6–7 for the minimum distance from the lowest bolt on the termination facility to the bottom of the termination enclosure.
9. Terminating facilities shall be secured to prevent bus turning or misalignment when the cables are installed.
10. The neutral terminating facility shall be permanently identified in clearly visible block lettering reading either “neutral” or “N”.
11. Uninsulated buses of different potentials shall not be permitted below or behind any terminating position as viewed from the front of the pull section. If cross-bussing is installed below or behind a terminating position, the cross-bussing shall be fully insulated or have a barrier.
12. For switchboard pull sections, a 1-1/2-inch minimum dimension is permitted from any energized part to a removable access cover panel when a safety barrier is provided by the manufacturer. Where a safety barrier is not provided, the minimum clearance shall be increased to four inches. The safety barrier shall:
    - ☐ Be constructed of a rigid insulating material, resistant to damage by impact or puncture, with a minimum thickness of 1/8 inch.
    - ☐ Extend a minimum of 10 inches below terminating bus and extend upward to cover all energized parts that infringe into the 4-inch minimum clearance dimension, and be removable. *Brackets and associated hardware used to mount the safety barrier shall **not** extend into the provided access opening.*
    - ☐ Have a caution sign affixed to the barrier reading “**WARNING: THIS BARRIER MUST BE INSTALLED BEFORE REPLACING PULL SECTION COVERS**”. Additional caution signs shall be affixed to exterior of each pull section access cover reading “**DO NOT REPLACE PULL SECTION COVERS UNTIL SAFETY BARRIER IS IN PLACE**.”

Figure 6–7: Underground Service Termination Standard Switchboard Service Section 400–4,000 A, 0–600 V

EUSERC No. 345

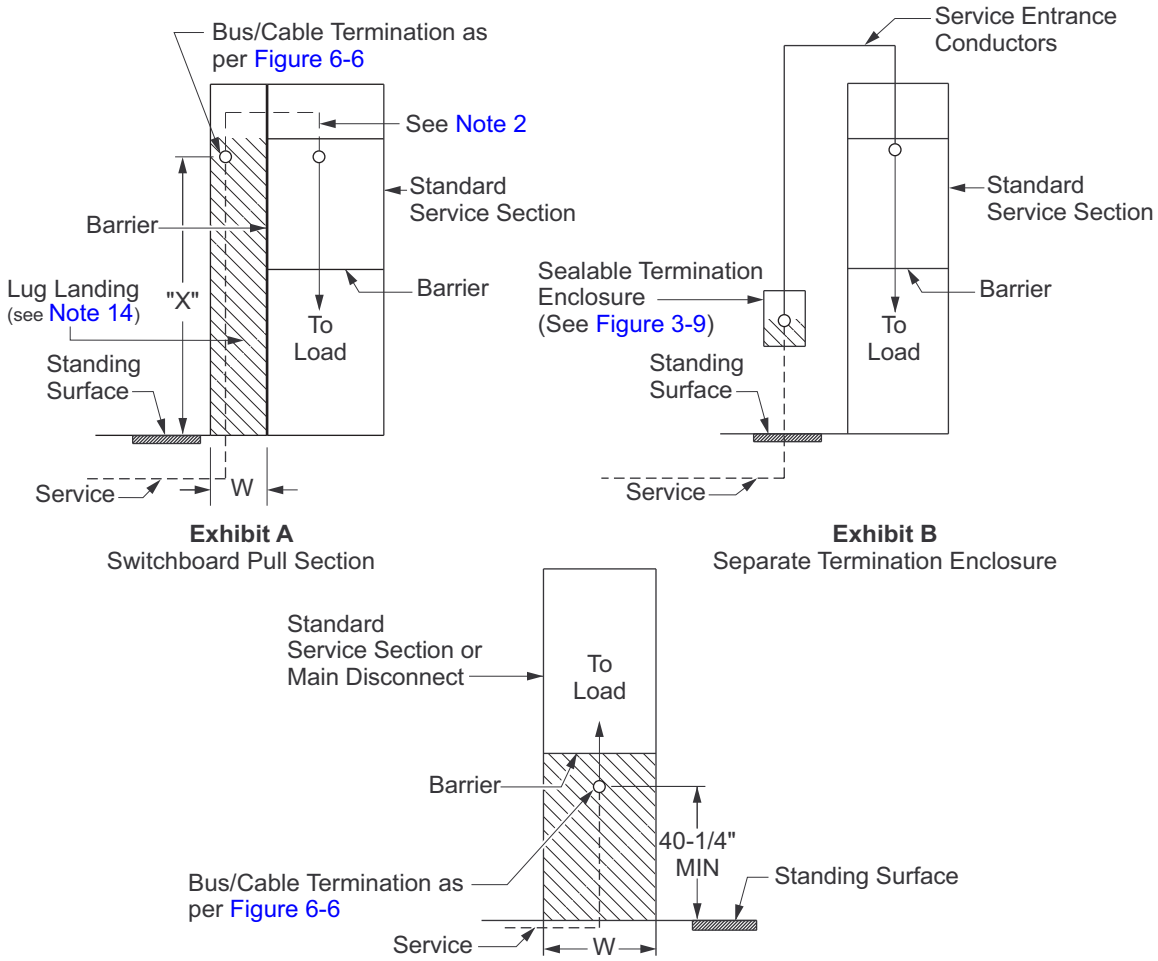

Exhibit A
Switchboard Pull Section

Exhibit B
Separate Termination Enclosure

Exhibit C
Bottom, Feed Service Section
(See Figure 6-3 for construction requirements, and also see Note 11)

Table 6–1: Minimum Pull Section Dimensions

Switchboard Rating (Amp)	Minimum Access Opening Dimension (W)[a/]		Minimum Termination Height (X)
	Three-Wire (in)	Four-Wire (in)	
400 to 800	24[b/]	24	42"[c/] MIN to 72" MAX
801 to 1200	—	30	
1201 to 2000	—	35	
2001 to 3000	—	42	60" MIN to 72" MAX
3001 to 4000	—	44	60" MIN to 72" MAX

Note(s):

1. A switchboard pull section, as shown in Exhibit A, Figure 6–7, a separate (nonattached) termination enclosure, as shown in Exhibit B, Figure 6–7, or a combination switchboard service section and pull section (bottom feed), as shown in Exhibit C, Figure 6–7, shall be provided for underground services.
2. Bus bars or cables shall extend from the pull section into switchboard service sections rated up to 800 A. Bus bars are required when the service section rating exceeds 800 A. In either case the Company will terminate its service conductors in the pull section. Customers are responsible for installing cable from the Pull Section to the CT Section.
3. When the service section is supplied from a switchboard pull section, as shown in Exhibit A, Figure 6–7, the bus bars or cables shall enter through the side or back of the sealable section above the current-transformer compartment, or by means of horizontal cross-bussing in back of the metering compartment.
4. When the service section is supplied from a switchboard pull section below the terminating facilities, the lowest cross-bus unit and the transition busing supplying the cross-bus units shall not be less than 2 feet above the bottom of the enclosure or more than 8 inches from the back of the enclosure.
5. Side or rear entry of service-entrance cables into the pull section may require greater dimensions than shown in Table 6–2. Consult the local Service Planning Office for requirements.
6. All terminating enclosures (for example, pull boxes and pull sections) shall have full front access. Cover panels shall be removable, sealable, provided with two lifting handles, and limited to a maximum of 9 square feet in area.
7. Sealing provisions shall consist of two drilled stud and wing-nut assemblies on opposite sides of the panels.
8. See Figure 6–6 for construction details and clearance requirements for terminating facilities in pull boxes and pull sections.
9. Ground bus, when provided, shall be located at the rear of the terminating enclosure.
10. Bottom feed service sections of main disconnects are limited to a maximum of 2000 A.
11. The Company will furnish and install the terminating lugs for their service cables. Consult the local Service Planning Office for the number of landing positions required.
12. For the number of service conduits in a pull section for the main switch ultimate capacity, see Table 6–2.
13. The shaded area of the termination section is for Company service lateral conductors only.
14. Switchgear rated 800 A and below shall be provided with a lug landing device in the Utility Pull Section as shown in Exhibit A.

---

a/ The minimum pull section access opening (W) is measured between the left side and right side return flanges.

b/ For single-phase, three-wire only, 600 A maximum.

c/ For reduced termination height in bottom-feed service sections, see Note 4.

Table 6–2: Number of Service Conduits for Commercial/Industrial Underground Pull Sections

Main Switch Ultimate Capacity (Amp)	Number of Conduits
400	One 4-inch
600/800 A	Two 4-inch
1000	Four 4-inch[a/]
1200 A	Four 4-inch
1600 A	Six 4-inch
2000 A/2500 A	Two banks of four 4-inch[b/]
3000 A	Two banks of six 4-inch[b/]
4000 A	Cable trench[c/]

Note(s):

1. The recommended number of conduits is based on ultimate ampacities of cable (700 kcmil) at 75 percent load factor.
2. When service conduit extends beyond 100 feet, consult the Company for conduit size requirements.
3. If the installed panel is not listed in Table 6–2 above, install conduits specified for the next largest Main Switch.

---

a/ Three 4-inch conduits may be used, but four 4-inch conduits create a block for semi-encasement.

b/ Cable trench is preferred. When two conduit banks are used, they shall be spaced a minimum of 6 feet apart until conduit is configured to pull section.

c/ Cable trench is preferred. When it is not practical to install cable trench, two banks of seven 4-inch conduits may be used, and they shall be placed a minimum of 6 feet apart.

Figure 6–8: Instrument-Transformer Compartment for Switchboards 0–1,000 A Maximum — 0–600 V, Single-Phase or Three-Phase, Three-Wire

EUSERC No. 319

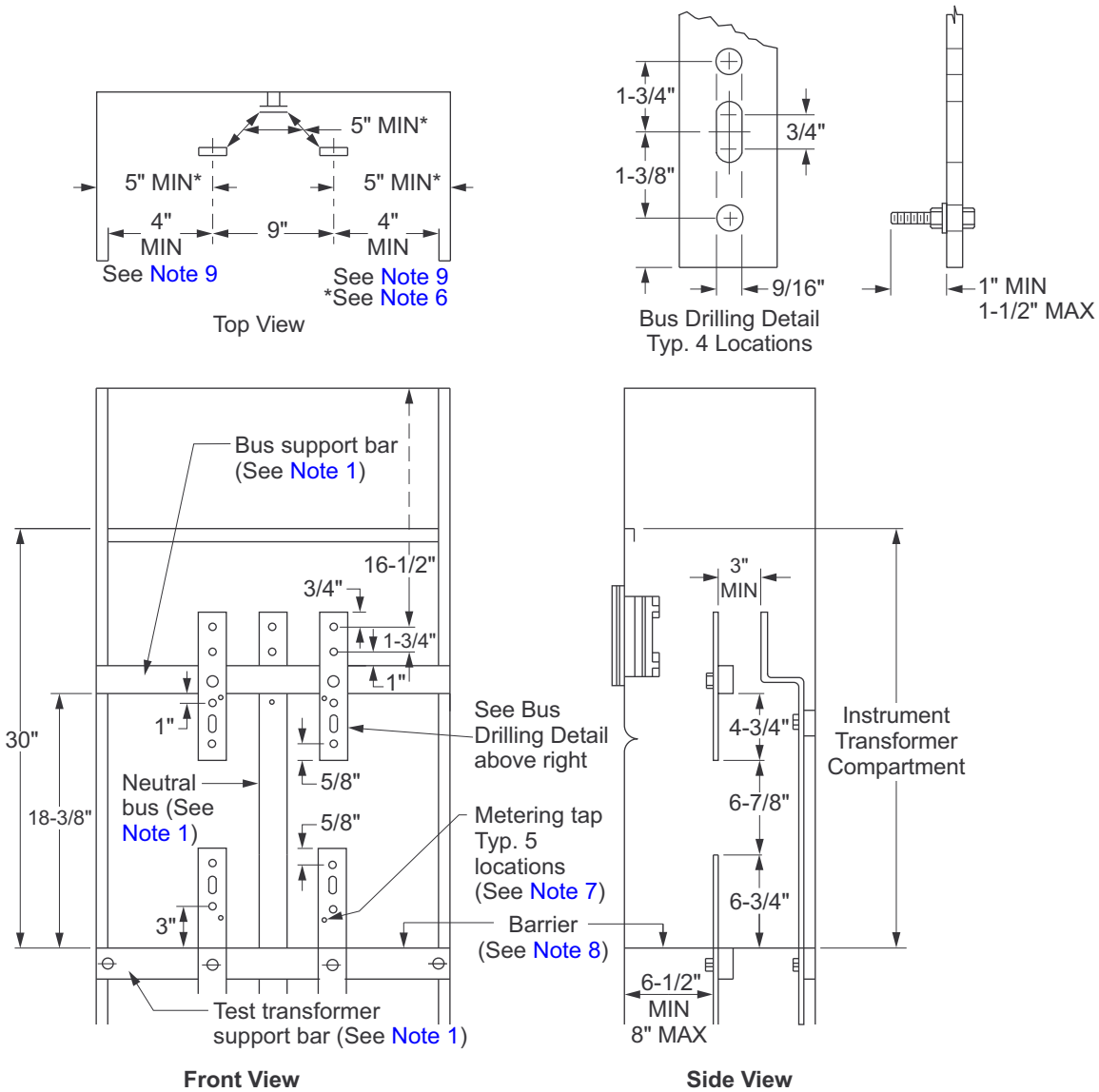

Note(s):

1. Bus arrangement and supports shall be provided as shown, except the neutral bus may be located at either side or on either side wall. Bus supports shall be constructed of a continuous bar of insulating material and shall be rigid to prevent misalignment of the bus units with the cables in place.
2. The bus units may be supplied from the top or bottom, and shall be anchored to prevent turning. Bus units shall be constructed of rectangular bus and when laminated shall have no space between laminations. Bus dimensions shall be as follows:

Minimum:	1/4 inch × 2 inches
Maximum:	3/4 inch × 2 inches

3. Bus unit shall be provided with a fixed stud as shown for mounting the current transformers. Each shall:
   a. Consist of a 1/2-inch steel bolt and shall be provided with a spring washer and a nut. The spring washer may be either a cone-type (Belleville) washer or a split-ring washer and flat washer. All parts shall be plated to prevent corrosion.
   b. Be secured in place. “Secured in place” means that the stud will not turn, back-out, or loosen in any manner when tightening or loosening the associated nuts (including cross-threaded situations.)
4. When the compartment is supplied from horizontal cross-bussing, the busing shall pass through the compartment or in the sealed area above the compartment.
5. Except for conductors supplying the instrument-transformer compartment, and the ground bus, no other conductors or devices shall be installed in, or routed through, the compartment or the sealed area above the compartment. The ground bus shall not infringe on utility-compartment space, or reduce any clearances.
6. A clear unobstructed work space shall be provided around the current-transformer bus units from the barrier to the upper-support bar.
7. Taps for attachment of meter wiring shall be provided as follows:
   a. One tap on each upper- and lower-phase bus unit with a 10-32 screw and washer provided for each phase bus in either the upper or lower position.
   b. One tap on the neutral bus as shown, or when the compartment is supplied from cross-bussing a tap may be provided on the neutral cross-bus, or on a bus bar extension provided from the neutral cross-bus. A 10-32 screw and washer shall be provided for the neutral bus. Tap locations shall be centered between phase bus units, or at either side, and shall be readily accessible under energized conditions and with the current transformers in place.
8. The barrier shall be constructed of a rigid insulating material resistant to ARC tracking, and shall be secured in place with a maximum deflection of 1/2 inch from an applied force of 25 pounds downward. Openings in the barrier (that is, peripheral gaps around barrier, cutouts around bus bars, and hole diameters provided for ventilation) shall not exceed 3/8-inch. The barrier shall be attached with nonconductive fasteners.
9. Dimension measured to inside edge of the compartment access opening.
10. Compartment shall be on the supply side of the main disconnect.
11. Single-phase service is limited to 400- or 600-A maximum. Consult the local Service Planning Office, ESR–1, Table 1–1, for details.
12. Figure 6–8 does not apply to new three-phase services.

Figure 6–9: Instrument-Transformer Compartment for Switchboards
0–1,000 A, 0–600 V, Three-Phase, Four-Wire

EUSERC No. 320

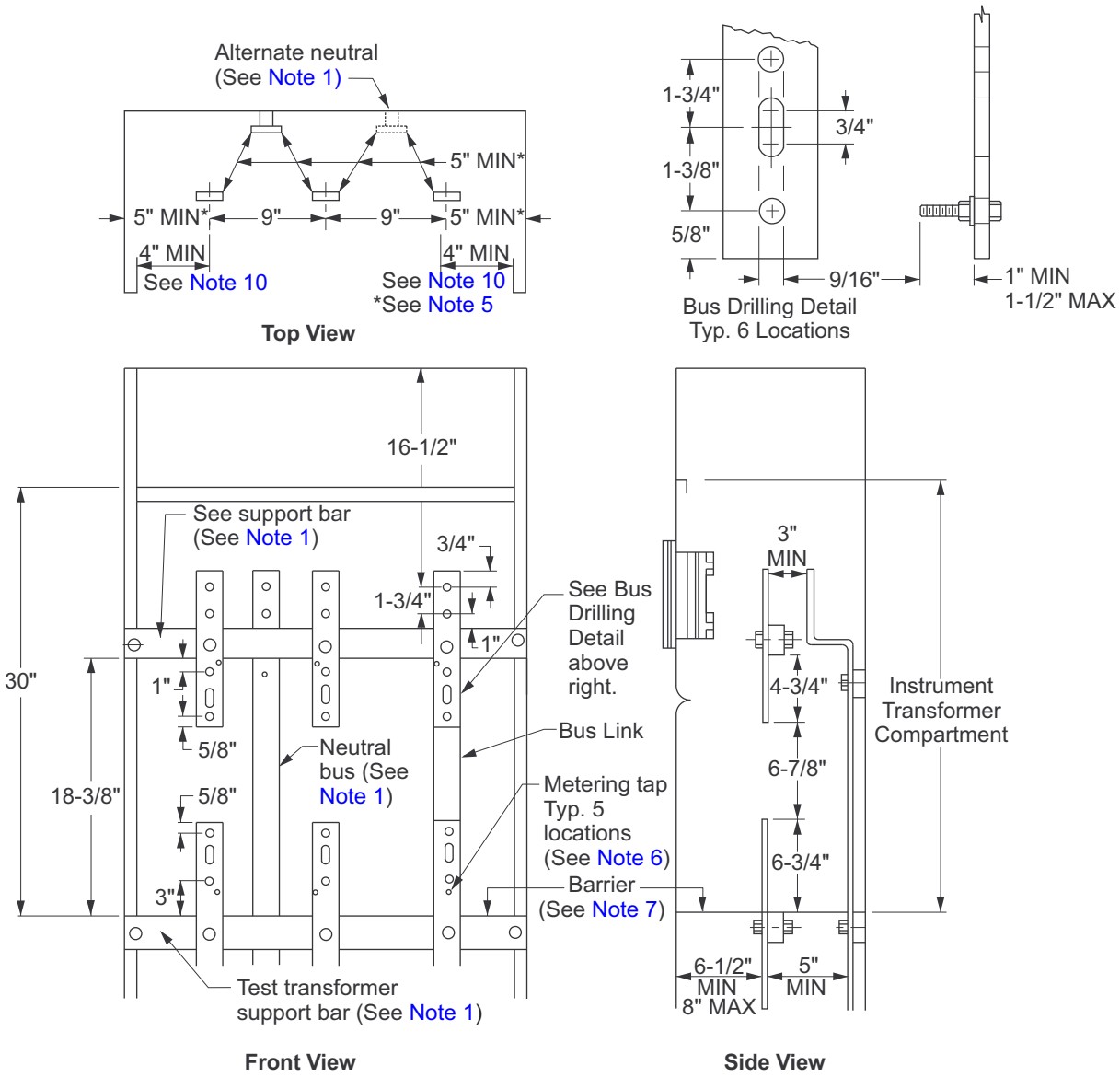

Note(s):

1. Bus arrangements and supports shall be provided as shown, except the neutral bus may be located at either side or on either side wall. Bus supports shall be constructed of a continuous bar of insulating material and shall be rigid to prevent misalignment of the bus units with the cables in place.
2. The bus units may be supplied from the top or bottom and shall be anchored to prevent turning. Bus units shall be constructed of rectangular bus and when laminated shall have no space between laminations. Bus dimensions shall be provided as follows:

Minimum:	1/4 inch x 2 inches
Maximum:	3/4 inch x 2 inches

3. Bus unit shall be provided with a fixed stud as shown for mounting the current transformers. Each shall:
   a. Consist of a 1/2-inch steel bolt and shall be provided with a spring washer and a nut. The spring washer may be either a cone-type (Belleville) washer or a split-ring washer and flat washer. All parts shall be plated to prevent corrosion.
   b. Be secured in place. “Secured in place” means that the stud will not turn, back-out, or loosen in any manner when tightening or loosening the associated nuts (including cross-threaded situations.)
4. When the compartment is supplied from horizontal cross-bussing, the busing shall pass through the compartment or in the sealed area above the compartment.
5. Except for conductors supplying the instrument-transformer compartment, and the ground bus, no other conductors or devices shall be installed in, or routed through, the compartment or the sealed area above the compartment. The ground bus shall not infringe on utility-compartment space, or reduce any clearances.
6. Taps for attachment of meter wiring shall be provided as follows:
   a. One tap on each upper- and lower-phase bus unit with a 10-32 screw and washer provided for each phase bus in either the upper or lower position.
   b. One tap on the neutral bus as shown, or when the compartment is supplied from cross-bussing a tap may be provided on the neutral cross-bus, or on a bus bar extension provided from the neutral cross-bus. A 10-32 screw and washer shall be provided for the neutral bus. Tap locations shall be centered between phase bus units, or at either side, and shall be readily accessible under energized conditions and with current transformers in place.
7. The barrier shall be constructed of a rigid insulating material resistant to ARC tracking, and shall be secured in place with a maximum deflection of 1/2 inch from an applied force of 25 pounds downward. Openings in the barrier (that is, peripheral gaps around barrier, cutouts around bus bars, and hole diameters provided for ventilation) shall not exceed 3/8 inch. The barrier shall be attached with nonconductive fasteners.
8. A removable link shall be installed in the right side phase bus for three-phase, three-wire service.
9. The power leg bus for a four-wire delta service shall be identified by an orange-colored outer finish, or by tagging or other effective means.
10. Dimension measured to inside edge of the compartment access opening.
11. Compartment shall be on the supply side of the main disconnect.

Figure 6–10: Instrument-Transformer Compartment for Switchboards 1,001–3,000 A, 0–600 V, Three-Phase, Four-Wire

EUSERC No. 322

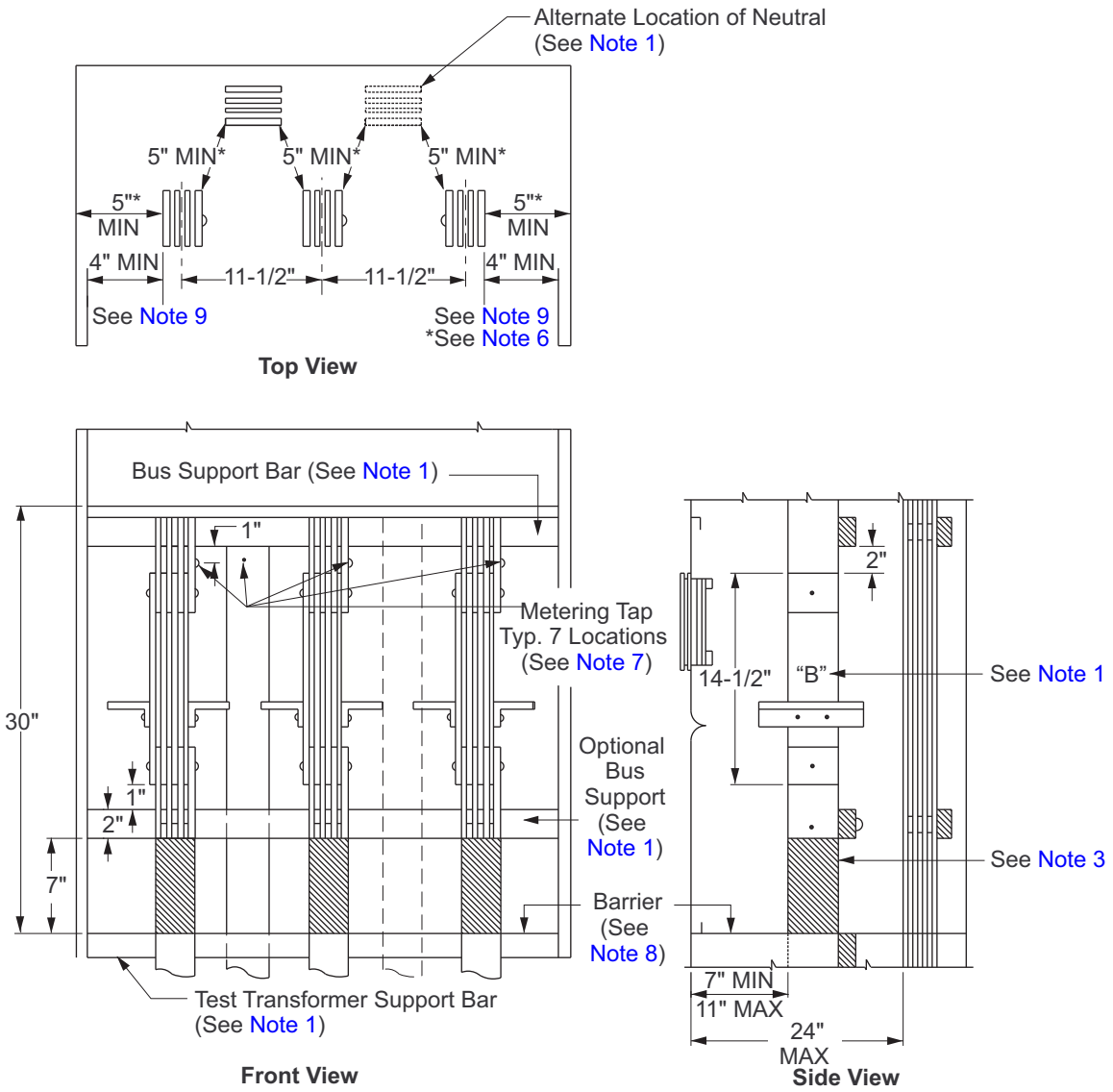

Note(s):

1. Bus arrangements and supports shall be provided as shown, except the neutral bus may be located at either side or on either side wall. Bus units shall be anchored so that buses will remain in position when Section "B" is removed. For details of Section "B" and the insulated current-transformer support, see Figure 6–11. Bus supports shall be constructed of a continuous bar of insulating material.
2. The bus units may be supplied from the top or bottom, and shall be constructed of rectangular bus. Maximum allowable bus size shall be four 1/4-inch × 4-inch bars spaced 1/4-inch.
3. Bus units shall be insulated as shown and the insulating material shall be rated for the serving voltage. Round bus corners as necessary to prevent damage to insulation.
4. When the compartment is supplied from horizontal cross-bussing, the busing shall pass through the compartment or in the sealed area above the compartment.

5. Except for conductors supplying the instrument-transformer compartment, and the ground bus, no other conductors or devices shall be installed in, or routed through, the compartment or the sealed area above the compartment. The ground bus shall not infringe on utility-compartment space, or reduce any clearances.
6. A clear unobstructed work space shall be provided around the current-transformer bus units from the barrier to two inches above the removable current-transformer bus sections (“B”).
7. A 10-32 tap for attachment of meter wiring shall be provided as follows:
   a. One tap on each upper- and lower-phase bus unit with a 10-32 screw and washer provided for each phase bus in either the upper or lower position.
   b. One tap on the neutral bus as shown, or when the compartment is supplied from cross-bussing a tap may be provided on the neutral cross-bus, or on a bus bar extension provided from the neutral cross-bus. A 10-32 screw and washer shall be provided for the neutral bus. Tap locations shall be centered between phase bus units, or at either side, and shall be readily accessible under energized conditions and with the current-transformers in place.
8. The barrier shall be constructed of a rigid insulating material resistant to ARC tracking and shall be secured in place with a maximum deflection of 1/2 inch from an applied force of 25 pounds downward. Openings in the barrier (that is, peripheral gaps around barrier, cutouts around bus bars, and hole diameters provided for ventilation) shall not exceed 3/8 inch. The barrier shall be attached with nonconductive fasteners.
9. Dimension measured to inside edge of the compartment access opening.
10. For underground services installed by the Company the buses shall extend into the pull section, see Figure 6–7.
11. On four-wire delta services, the power leg bus shall be identified by an “orange-color” outer finish or by tagging or by other effective means.
12. Compartment shall be on the supply side of the main disconnect.

Figure 6–11: Removable Link and Current-Transformer Support for Instrument-Transformer Compartments with 4-Inch Bus 0–600 V

EUSERC No. 330

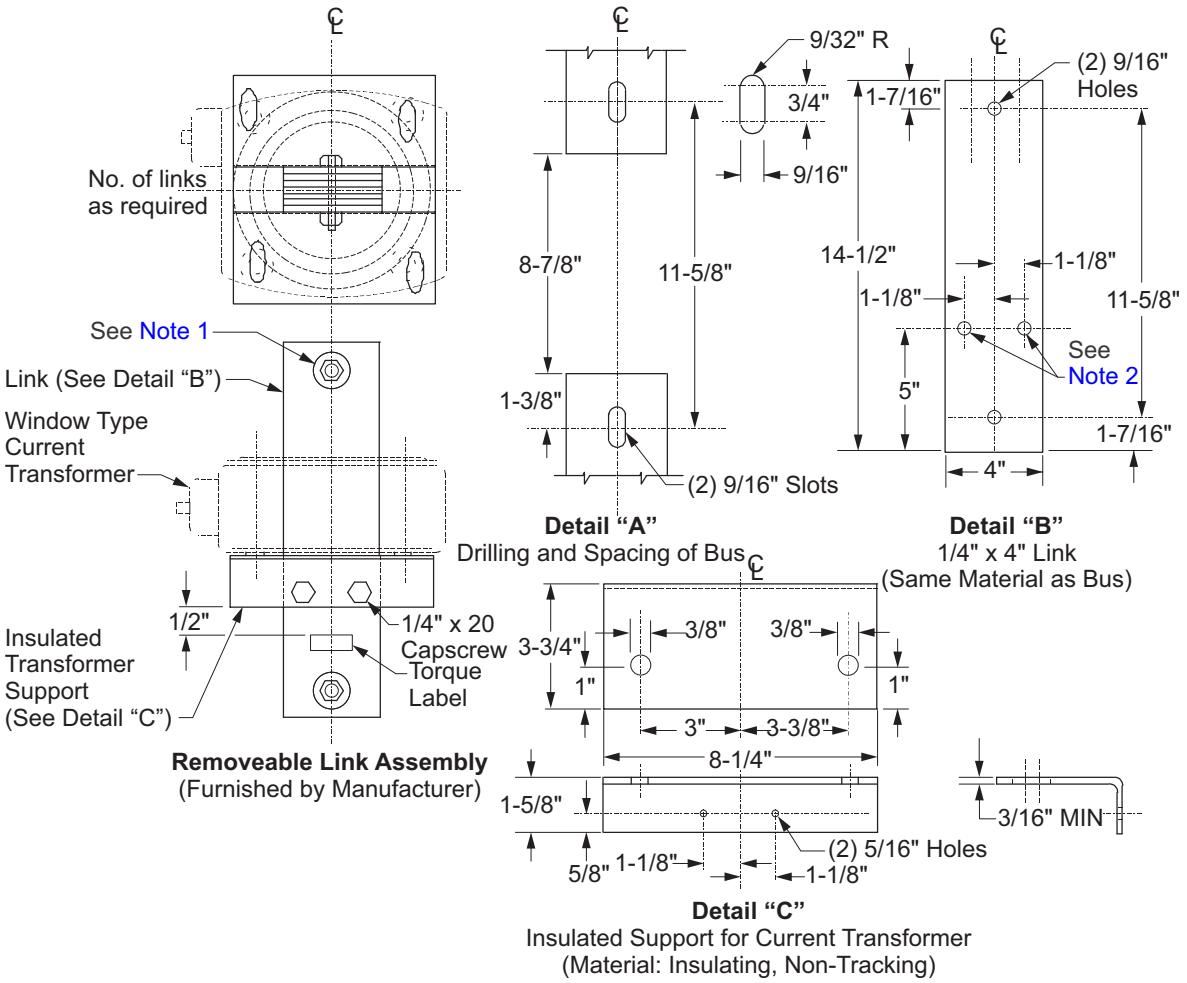

Note(s):

1. Manufacturer shall secure the removable bus link to the upper and lower current-transformer bus units using 1/2-inch hex-head (Grade 5) steel bolts with washers and nut. Each bolt shall be provided with a flat washer, a spring washer and a nut. Spring washer may be either a cone-type (Belleville) washer or a split-ring washer with a flat washer. All washers (Belleville or flat) shall be 2-1/4 inches minimum. Use of Belleville washers requires a label on each assembly indicating proper torque setting.
2. Drill and tap two holes as shown on the outer bus units for 1/4 inch × 20 capscrews.

Figure 6–12: 15-Inch Hinged Meter Panel 0–600 V.

EUSERC No. 332

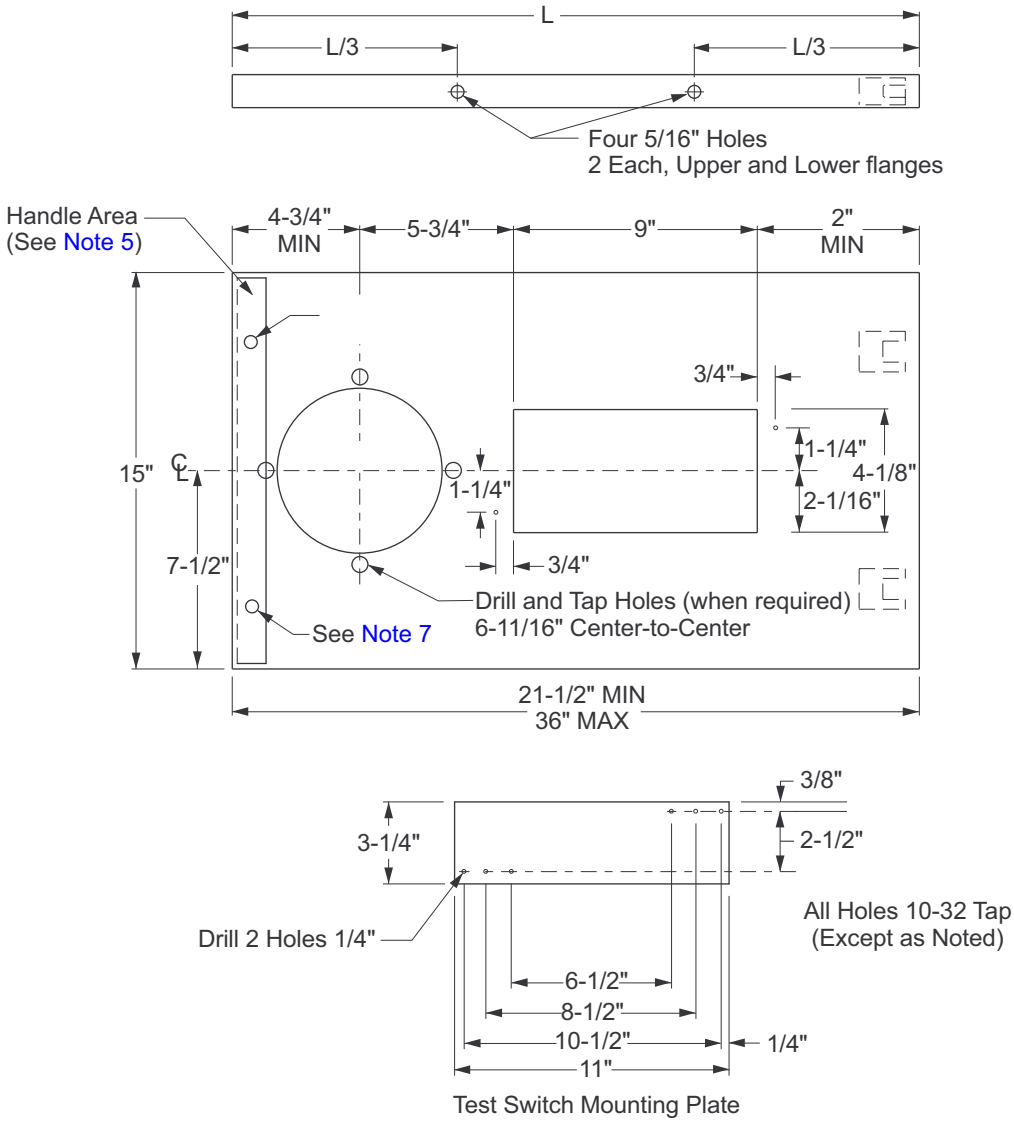

Note(s):

1. The panel shall be constructed of 12 gauge (minimum) steel and furnished with a meter socket, sealing ring, and a slotted opening and removable plate for the installation of a secondary test switch. The slotted opening and removable plate edges shall be smooth to prevent damage to meter wiring.
2. The removable plate shall be attached to the rear of the panel with screws that do not protrude through the face of the panel.
3. The meter socket shall be designed for back connection.
4. The panel shall be equipped with hinges. The hinges shall permit the panel to open to 90 degrees, and shall be readily interchangeable, right or left, on the meter socket panel. For clevis or removable pin-type hinges, the pin shall be removable from the top.
5. The panel shall be equipped with a handle on the unsupported end. The handle shall be interchangeable, right or left, on the meter socket panel and maintain a 1-inch (minimum) clearance from the meter socket flange and slotted opening.
6. The panel shall support a 25-pound load applied at the unsupported end when fully opened with a maximum sag of 1/8 inch.
7. All securing screws and sealing screws shall be captive. Stud and wing-nut assemblies shall be sealable.
8. See ESR–5 for meter socket terminal arrangements.

Figure 6–13: Instrument-Transformer Compartment for Switchboards 3,001–4,000 A, 0–600 V, Three-Phase, Four-Wire

EUSERC No. 324

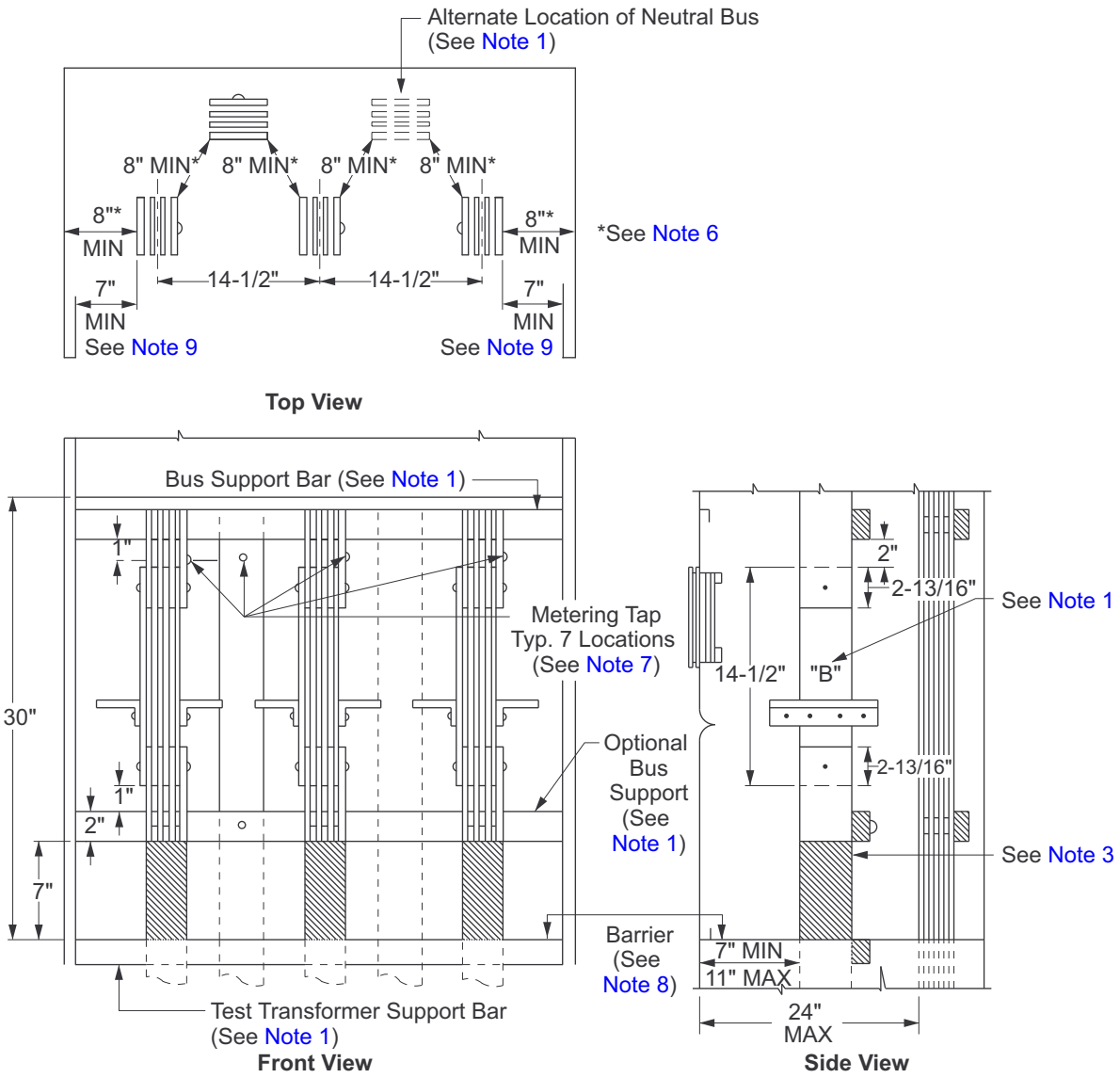

Table 6–3: Maximum Allowable Bus Size

Four—1/4" x 4" bars spaced 1/4"
Six—1/4" x 5" bars spaced 1/4"
Five—3/8" x 5" bars spaced 3/8"

Note(s):

1. Bus arrangements and supports shall be provided as shown, except the neutral bus may be located at either side or on either side wall. Bus units shall be anchored so that buses will remain in position when section "B" is removed. For details of section "B" and the insulated current-transformer support, see Figure 6–11 for four-inch bus and Figure 6–14 for five-inch bus. Consult the Company for the use of bus larger than five inches. Bus supports shall be constructed of a continuous bar of insulating material.

2. The bus units may be supplied from the top or bottom, and shall be constructed of rectangular bus. For maximum allowable bus sizes, see Table 6–3.
3. Bus units shall be insulated as shown and the insulating material shall be rated for the serving voltage. Round bus corners as necessary to prevent damage to insulation.
4. When the compartment is supplied from horizontal cross-bussing, the busing shall pass through the compartment or in the sealed area above the compartment.
5. Except for conductors supplying the instrument-transformer compartment, and the ground bus, no other conductors or devices shall be installed in, or routed through, the compartment or the sealed area above the compartment. The ground bus shall not infringe on utility-compartment space, or reduce any clearances. Customer connections to the ground bus shall not be allowed in the instrument-transformer compartment.
6. A clear unobstructed work space shall be provided around the current-transformer bus units from the barrier to two inches above the removable current-transformer bus sections (“B”).
7. A 10-32 tap for attachment of meter wiring shall be provided as follows:
   a. One tap on each upper- and lower-phase bus unit with a 10-32 screw and washer provided for each phase bus in either the upper or lower position.
   b. One tap on the neutral bus as shown, or when the compartment is supplied from cross-bussing a tap may be provided on the neutral cross-bus, or on a bus bar extension provided from the neutral cross-bus. A 10-32 screw and washer shall be provided for the neutral bus. Tap locations shall be centered between phase bus units, or at either side, and shall be readily accessible under energized conditions and with the current-transformers in place.
8. The barrier shall be constructed of a rigid insulating material resistant to ARC tracking and shall be secured in place with a maximum deflection of 1/2 inch from an applied force of 25 pounds downward. Openings in the barrier (that is, peripheral gaps around barrier, cutouts around bus bars, and hole diameters provided for ventilation) shall not exceed 3/8 inch. The barrier shall be attached with nonconductive fasteners.
9. Dimension measured to inside edge of the compartment access opening.
10. For underground service installed by the Company the buses shall extend into the pull section, see Figure 6–7.
11. Compartment shall be on the supply side of the main disconnect.

Figure 6–14: Removable Link and Current-Transformer Support for Instrument-Transformer Compartments with 5-Inch Bus 0–600 V

EUSERC No. 331

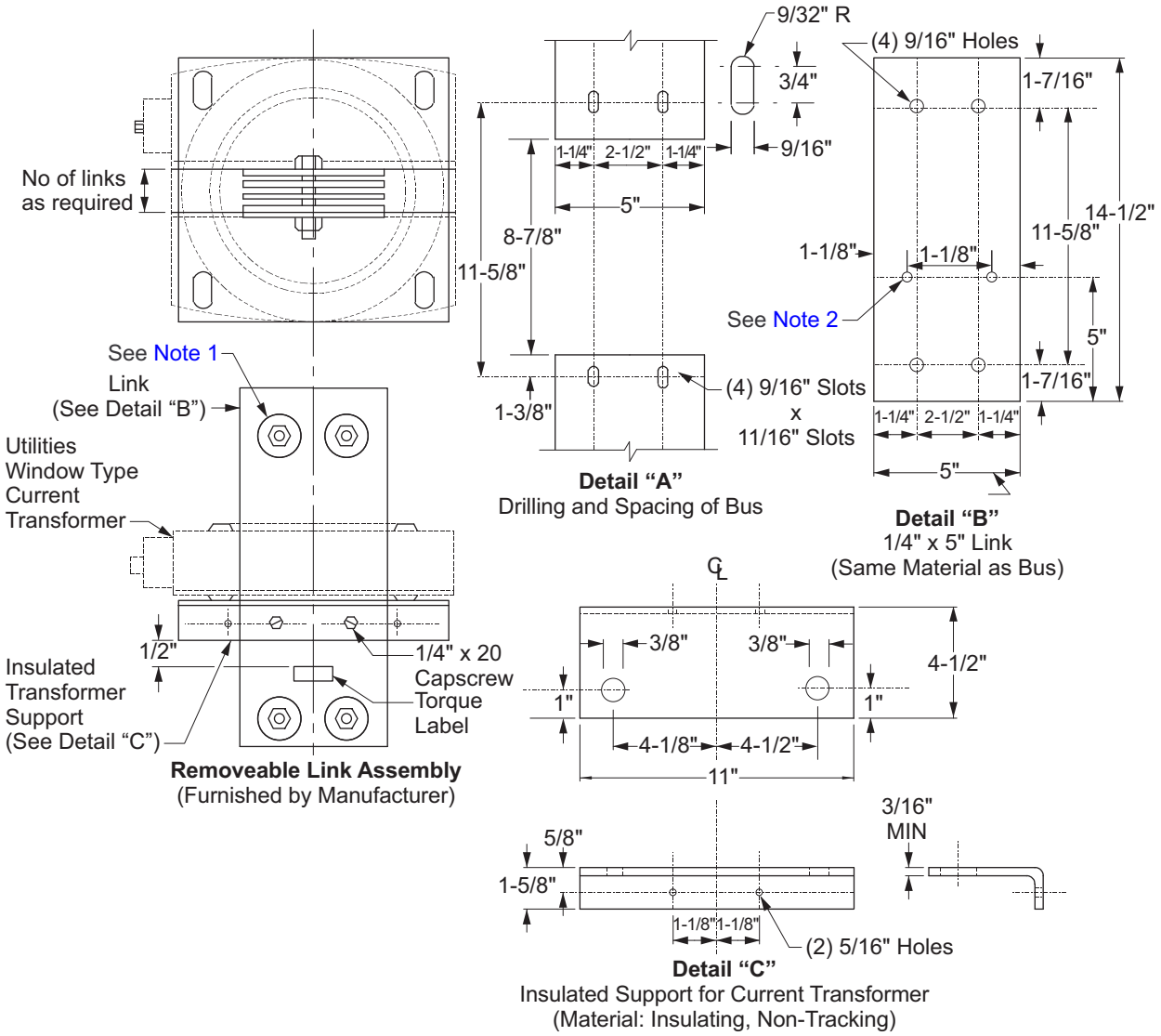

Note(s):

1. Manufacturer shall secure the removable bus link to the upper and lower current-transformer bus units using 1/2 inch hex-head (Grade 5) steel bolts. Each bolt shall be provided with two Belleville washers installed on opposite sides of the bus units and a nut. Use of Belleville washers requires a label on each phase of the bus link assembly indicating proper torque setting.
2. Drill and tap two holes as shown on the outer bus units for 1/4 inch × 20 capscrews.
3. Consult the Company for use of bus bars larger than five inches.

Figure 6–15: Self-Contained Meters Installed in Switchboards 0–200 A, 0–600 V

EUSERC No. 306

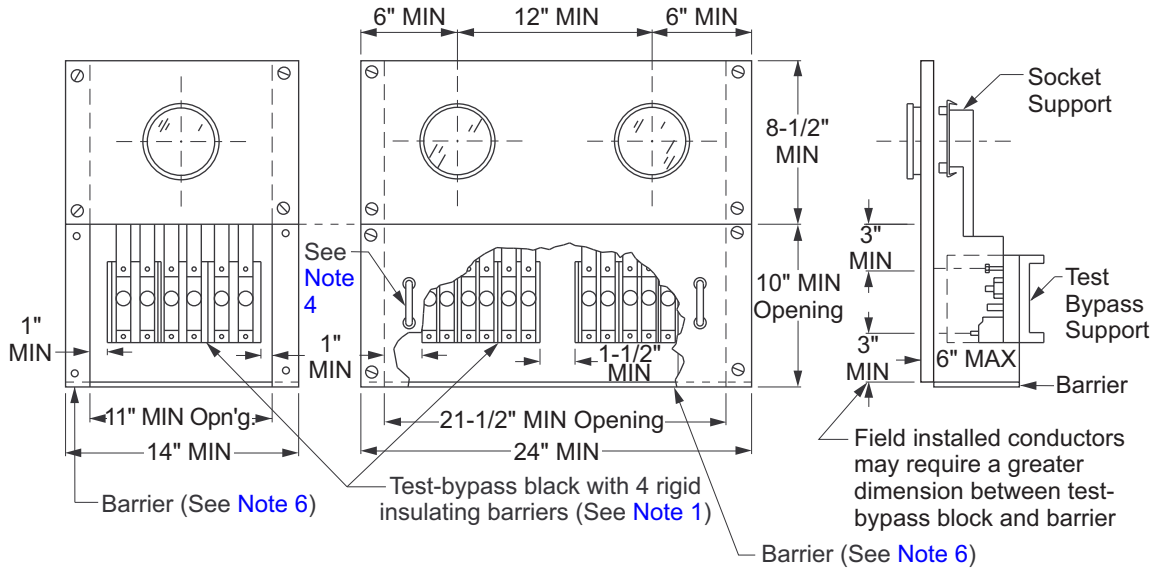

Note(s):

1. Test-bypass blocks with rigid insulating barriers shall be furnished, installed, and wired or bused to the meter socket by the manufacturer. Connection sequence is line-load from left-to-right.
2. Metered conductors shall not pass through adjacent metering compartments except in enclosed wireways. To ensure proper identification of cables in factory cabled equipment, metered cables (except in the test-bypass area) shall have either a physical barrier or be bundled to separate them from unmetered cable or permanently marked and isolated from unmetered cables. Physical barriers will not be required if the unmetered conductors are bus.
3. Meter panels shall be removable with a maximum of two meters per panel. Meter panels shall be provided with a sealing ring for each meter socket, and each meter socket shall be rigidly mounted on a support and attached to the meter panel. See ESR–5 for meter socket terminal requirements.
4. Test-bypass block cover panel shall be sealable and fitted with a lifting handle. All panels exceeding 16 inches in width shall require two lifting handles.
5. When a neutral is required for metering or testing, an insulated neutral terminal shall be provided behind each test-bypass cover panel. The terminal shall be readily accessible when the cover panel is removed and shall be individually connected to the neutral bus with a minimum size #8 AWG copper wire.
6. A factory-installed, full-width insulating barrier shall be located at the bottom of each test-bypass compartment. In addition, a full width and depth isolating barrier shall be located below the bottom test-bypass compartments and above the load terminals of the meter disconnect devices. If a factory-installed rear load wireway is provided, the isolating barrier shall extend back to that wireway. Ventilation openings, when provided, shall not exceed a maximum diameter of 3/8 inch. A slot in the isolating barrier provided for the load conductors supplied from the test-bypass blocks shall be a maximum of 1-1/2 inches in depth and may extend to the width of the meter disconnect devices. The slot may not be located in the front 6 inches of the test-bypass compartment insulating barrier.
7. For three-phase, four-wire, connect 7th jaw of meter socket to body of neutral lug with a white #12 AWG copper wire.
8. For three-phase, four-wire delta, identify right hand test-bypass block (2 poles) as power leg. Identification to be orange in color.
9. For three-phase, three-wire, install bus to connect line and load poles together at top of center test-bypass block and connect 5th jaw of meter socket to this bus using minimum #12 AWG copper wire. Color used to identify the wire shall not be white, grey, green, or orange.
10. For single-phase, three-wire, omit center test-bypass block.
11. For single-phase, three-wire, 120/208 V, omit center test-bypass block and connect 5th jaw of meter socket to body of neutral lug with white #12 AWG copper wire.
12. Separate line and load conductors shall be installed by the contractor or manufacturer for each meter socket.
13. Each line and load position shall be clearly identified by 3/4-inch minimum block letter labeling.
14. All utility panel covers shall be sealable.
15. Except for conductors suppling the sealed utility compartments, no other conductors or devices shall be installed in, or routed through, the SCE sealed compartments.

16. A lockout device shall be incorporated as an integral part of each meter breaker/fusible disconnect for self-contained or instrument-rated panels.

Figure 6–16: Clearances for Residential Multiple-Metering Installations

EUSERC No. 353

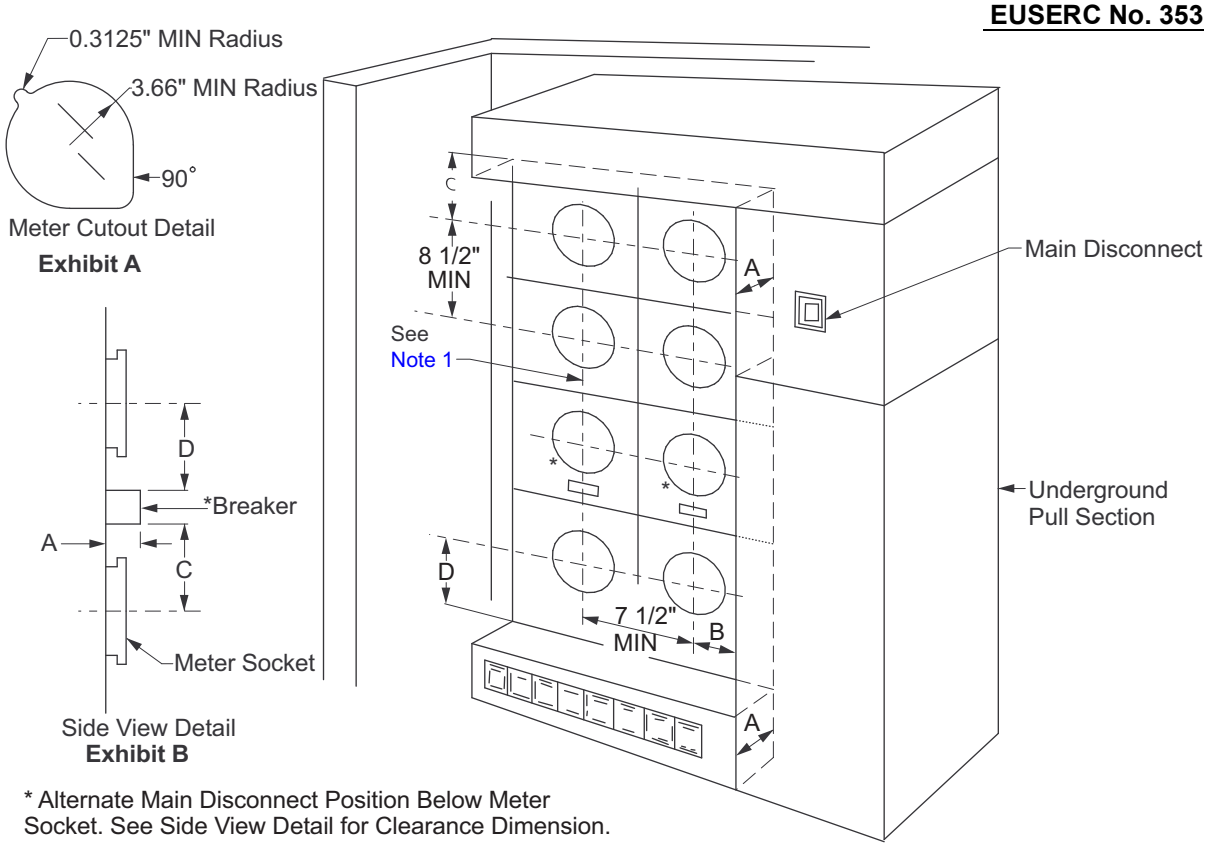

* Alternate Main Disconnect Position Below Meter Socket. See Side View Detail for Clearance Dimension.

Table 6–4: Clearances for Residential Multiple-Metering Installation

DIMENSIONS			
A (Protrusions)	**B MIN (in)**	**C MIN (in)**	**D MIN (in)**
0 (No protrusion)	3-3/4	4	4-3/4
Greater than 0" to 1-1/8" MAX	4-1/4	4	4-3/4
Greater than 1-1/8" to 2" MAX	4-1/4	4-1/4	6-1/4
Greater than 2" to 4" MAX	6-1/4	4-1/4	8
Greater than 4" to 11" MAX	6-1/4	10	8

Note(s):

1. Where an adjacent wall or other obstruction extends more than 11 inches perpendicular from the face of the meter panel, a 10-inch minimum dimension to the meter socket axis is required. For obstructions extending 11 inches or less from the meter panel, the side clearance shall conform to that of Dimension “B”.
2. Panels shall be removable to provide access to the customers equipment with the utility meters and tamper proof sealing rings in place. When there is more than one meter socket per panel, the minimum meter cutout opening, as detailed in Exhibit A, Figure 6–16, shall apply.
3. Underground landing lugs shall not be placed under any socket cover.
4. Dimension “B” shall be increased by the amount that the main switch door, including operating handle, reduces the clearance when opened 90 degrees.
5. See ESR–5 for meter maximum and minimum heights and general requirements.

6. Removable meter panel covers shall not exceed six-square feet in area.
7. Distribution conductors shall be barriered from metering compartment.
8. For single-phase, three-wire, 120/208 V installations, connect the fifth clip of the meter socket to the body of the neutral lug, with a minimum #12 stranded copper wire.

Figure 6–17: 30-Inch Hinged Dual-Socket Meter Panel 0–600 V

EUSERC No. 333

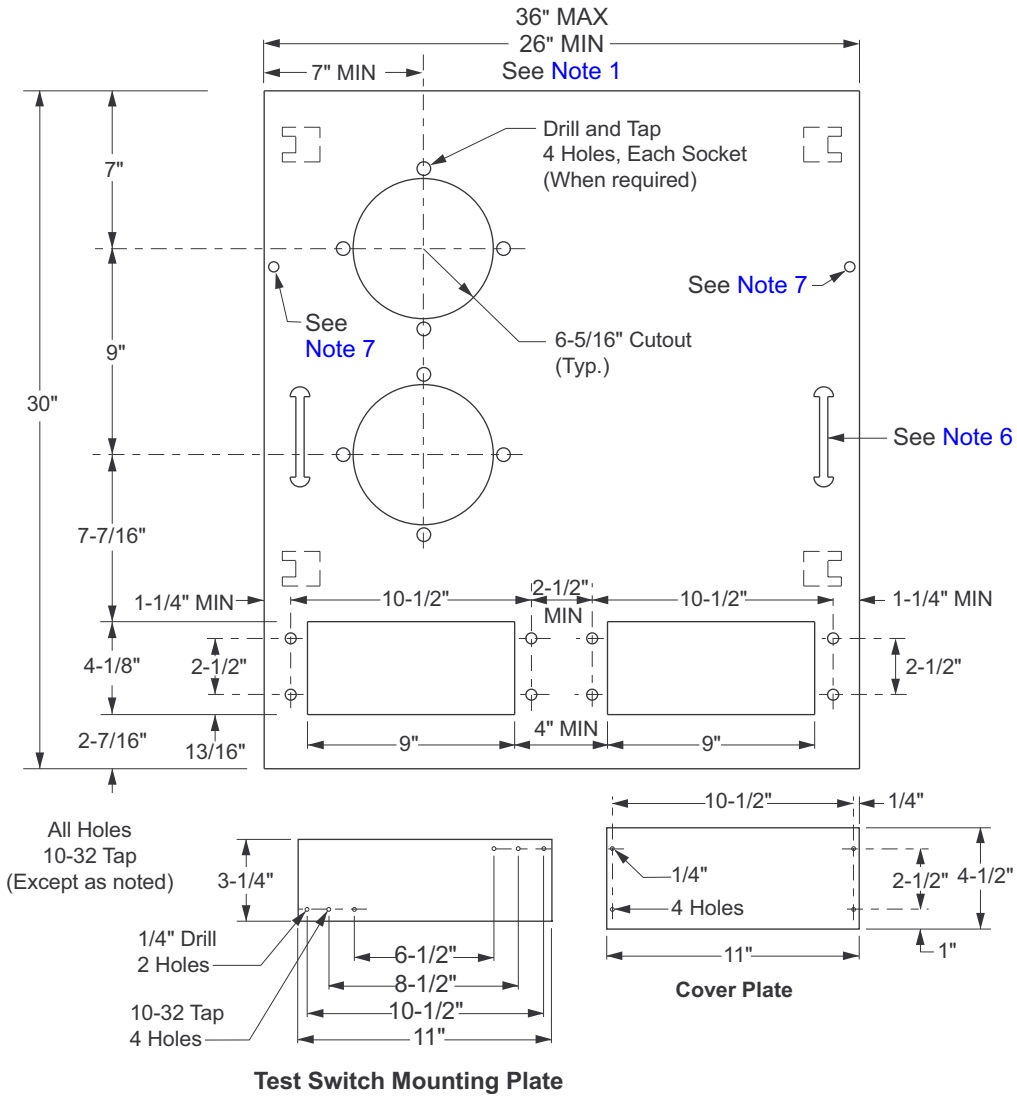

Note(s):

1. The panel shall be constructed of 12 gauge (minimum) steel and furnished with meter sockets, sealing rings, slotted openings, a removable plate for installation of a secondary test switch, and a cover plate. Slotted openings and removable plate edges shall be smooth to prevent damage to meter wiring.
2. The removable plate shall be attached to the rear of the panel with screws that do not protrude through the face of the panel.
3. Meter sockets shall be designed for back connection.
4. Hinges shall be readily interchangeable, right or left, on the panel and permit the panel to open to 90 degrees. Clevis or removable pin type hinges shall be removable from the top.
5. The panel shall support a 25-pound load applied at unsupported end when fully opened with a maximum sag of 1/8 inch.
6. The panel shall have a handle attached to both sides.
7. Stud and wing-nuts shall be sealable when used.
8. See ESR–5 for meter socket terminal arrangements.

This page intentionally left blank.

ESR–7: Switchboards Above 600 V

TABLE OF CONTENTS

SECTIONS AND SUBSECTIONS		PAGE
1.0	General Information	7–5
2.0	Engineering Specifications	7–5
3.0	Manufacturer's Drawings for Approval	7–5
4.0	Service Cable Termination Section	7–6
5.0	Available Neutral Grounding Schemes	7–6
6.0	Working Space for High-Voltage Switchboards	7–6
7.0	Utility Compartment Labeling	7–7
8.0	Safety Grounding Provisions	7–7
9.0	Meter Panel and Doors	7–7
10.0	Basic Impulse Insulation Level Rating	7–7
11.0	Ventilation Openings	7–8
12.0	Door Access to Metering Cubicle(s)	7–8
13.0	Weatherproofing and Locking	7–8
14.0	Current-Transformer and Voltage-Transformer Installations	7–8
15.0	Bus Bars and Conductors	7–8
15.1	Approved Bus Material	7–8
15.2	Bus Dimensions and Spacing	7–8
15.3	Bus Installation for Current Transformers	7–8
15.4	Conductors and Bus Bars Passing through Compartment Walls	7–9
16.0	Metering Compartments — General	7–9
16.1	Insulated Neutral Termination	7–9
16.2	Instrument Transformer Mounting	7–9
16.3	Voltage-Transformer Mounting (Unistrut)	7–9
16.4	Current Transformers and Bus Link	7–9
16.5	Test Transformer Supports	7–9
16.6	Phase and Neutral Taps for Fuses and Voltage Transformers	7–9
16.7	Fuse Specifications	7–9
16.8	Voltage Transformer Disconnect Requirements	7–10
17.0	Sealing of Metering and Pull Sections	7–10
18.0	Service Connections of Switchboards	7–10
18.1	Underground Service	7–10
18.2	Underground Service-Termination Pull Section	7–10

SECTIONS AND SUBSECTIONS **PAGE**

19.0 Service and Meter Switch 7–11

19.1 Location — Metering Equipment, Wiring, and Devices — 2400 V; 4160 V; 4800 V; 7200 V; 12000 V; and 16500 V Services 7–11

19.2 Mitigation of Customers Control Power Transformers (CPT) Potential Ferroresonance Conditions 7–12

20.0 Switchboard Metering Section 7–12

20.1 Neutral Conductor — 4160 V Service 7–12

20.2 Handles on Hinged Panels 7–12

20.3 Meter Panel Details 7–12

20.4 Meter Clearances — Enclosed Meter Panels 7–13

20.5 Meter Sockets and Test Blocks 7–12

20.6 Meters 7–13

20.7 Test Switches and Phasing Transformers 7–13

20.8 Meter Locations Prohibited 7–13

20.9 Barriers 7–13

FIGURES

7–1 High-Voltage Metering Enclosure — 2,400 V Through 16,500 V Service 7–14

7–2 High-Voltage Switchboard — 2400 V Through 16500 V Service 7–16

7–3 Mounting Pattern for Voltage and Current Transformers — 2400 V Through 16500 V Service 7–17

7–4 Indoor Current Transformer Dimensions for Metering Purposes — 5 kV Through 15 kV Classes 7–18

7–5 Outdoor Voltage Transformer Dimensions — 5 kV to 15 kV Classes 7–19

7–6 Underground Service-Termination Pull Section — 2400 V through 16500 V, 3- and 4-Wire 7–20

7–7 Busway Service Head — 601 V Through 34500 V, 3- Phase, 3- or 4-Wire 7–22

7–8 High-Voltage Meter Panel Detail — kWh/kVARh Meter 7–23

7–9 High-Voltage Meter Panel Detail — kWh/kVARh Meter and Control Power Meter 7–24

7–10 High-Voltage Meter Panel Detail — Dual Meter Socket and Control Power Meter Socket 7–25

7–11 Test-Switch Layout and Removable Plate Details 7–26

7–12 Control-Power Meter Socket — Test-Block Wiring Diagram 7–26

7–13 High-Voltage Switchboards' Barrier for Metering Located in Front of CT Area 7–27

7–14 Metering Enclosure, 38 kV Class, 3-Phase, 3-Wire, Application and General Enclosure Requirements 7–28

7–15 38 kV Class, 3-Phase, 3-Wire, Utility Service Underground Termination Enclosure 7–29

7–16 38 kV Class, 3-Phase, 3-Wire, Voltage Transformer Disconnect and Fuse Compartments 7–31

7–17 38 kV Class, 3-Phase, 3-Wire, Voltage Transformer Compartment 7–33

7–18 Voltage Transformer Strut Mounting Base Detail 7–36

7–19 38 kV Class, 3-Phase, 3-Wire, Current Transformer and Metering Compartments 7–37

TABLES

7–1 Basic Impulse Insulation Level Rating 7–7

7–2 High-Voltage Utility Metering Section Dimensions 7–15

7–3 High-Voltage Busway Service Head Dimensions 7–22

This page intentionally left blank.

ESR–7: Switchboards Above 600 V

1.0 General Information

The following requirements apply to switchboards for 2400 V; 4160 V; 4800 V; 7200 V; 12000 V; and 16500 V service installations. Higher-voltage service will be considered special and will require detailed instructions for each individual installation. Consult the local Service Planning Office for details.

2.0 Engineering Specifications

Each switchboard for a service exceeding 600 V will be considered as being specifically engineered.

The Company will issue specifications for each high-voltage service installation. These specifications will be based on the application for service, the electrical load and service-voltage plans as requested by the customer, and the service rules of the Company.

The installation shall comply with all applicable rules of the National Electrical Code (NEC) and other governing codes and ordinances.

3.0 Manufacturer's Drawings for Approval

The designer or manufacturer of high-voltage switchboards for the customer's service shall submit three copies of the engineered switchboard drawings which shall include the following illustrations:

- Utility Service Cable Terminating Section with dimensions (including view to terminations)
- Main Breaker or Switch/Fuse Section (include control power equipment if applicable)
- Front and Rear Switchboard Elevations Views with overall dimensions
- Switchboard Plan View
- Utility Metering Sections Views (including meter panel or meter door)
- Electrical Single-Line (from service cable terminating pull section to main distribution breakers)

These drawings may include references to specific pages within this manual, but shall include specific dimensions for service cable pull section and utility metering sections.

Drawings are to be submitted prior to switchboard fabrication, to the local Service Planning Office, where the service is to be installed (see Table 7–1 for locations). Since re-design and/or revisions may be required to obtain panel drawings approval, a lead time of six to eight weeks should be allowed for the review and approval.One copy of the switchboard drawings will be returned to the sender with approval or necessary corrections. Revised drawings may be requested for final approval once corrections or modifications have been completed. High-voltage switchboards drawings are considered approved for fabrication once they are stamped, dated, and approved by a Company representative.

Coordinated breaker trip settings, current transformer ratios, tap settings, time dial settings, relay types, and certified test reports shall be provided to the Company before the service is energized.

This practice will assure the manufacturer of furnishing service sections to the customer that will be suitable with respect to these service requirements and the method-of-service connection to the Company's facilities.

4.0 Service Cable Termination Section

Every switchboard to which high-voltage service is to be supplied shall be equipped with a separate, fully-enclosed service-cable terminating pull section (see Figure 7–6). Space will be provided for the support and connection of the service cables to a bused section which has standard National Electrical Manufacturing Association (NEMA) drillings for termination lugs with two-holed tongues. Service-cable termination pads for multiple cables, same phase, next to each other, will require a minimum four-inch horizontal separation between bolt holes measured from centerline to centerline. The Company will specify the number of cables which it will install and terminate in the pull section. The Company will furnish and install the terminating lugs and bolts.

For service terminations, one landing position shall be provided for each phase and neutral bus for each 400 A, or portion thereof, of service ampacity, up to 800 A. Consult the Company for service termination requirements when the high-voltage switchboard ampacity exceeds 800 A. All parts must be plated to prevent corrosion.

The service-cable terminating pull section shall be equipped with a hinged, full width and height opening access door with padlock provisions, and latch, to hold the door open a minimum of 90 degrees.

5.0 Available Neutral Grounding Schemes

Where a customer is served directly from a distribution circuit (or an autotransformer), the only available neutral grounding scheme will be that of the distribution circuit.

Where a customer is served by a dedicated two-winding distribution transformer, the following neutral grounding schemes will normally be available:

- Solidly grounded
- Ungrounded
- Inductance grounded
- Resistance grounded (high or low)
- Resonant grounded

Where special facilities are necessary to implement a grounding scheme, they shall be furnished and installed at the customer’s expense. Consult the local Service Planning Office for neutral grounding scheme details.

6.0 Working Space for High-Voltage Switchboards

High-voltage switchboards shall be installed with a minimum of 5 feet of clear, level flat concrete space in the front, rear and side of any section where such part supports or provides access to metering, testing equipment or service cable termination sections.

Because access is required to both the front and rear of the switchboard, a walkway of at least two feet wide shall be provided around both ends of the switchboard. If access to the service-cable termination section is from the side of the switchboard, a five-foot working space shall be provided on the termination section end.

The working space in front of the utility sections shall be as wide as the section.

When indoor non-raintight (NEMA-1) or outdoor raintight (NEMA-3R) service equipment is installed on an elevated portion of the floor or a housekeeping pad, the pad must extend a minimum of five feet in front or rear of the service equipment, including metering and service-termination sections. If the pad is flush with the front of the equipment, the maximum meter height of 6'-3" shall not be exceeded.

To maintain a safe, clear, and level working area in front of new or existing meter and service equipment, a concrete slab acceptable to the Company shall be required.

7.0 Utility Compartment Labeling

Utility compartments shall be permanently labeled with machine-engraved, laminated-phenolic (or equivalent) labels. Quarter-inch high white letters and numbers on red-colored material, which is readily visible and mechanically attached to the face of the following designated compartments; and shall be worded as follows:

- Utility Voltage Transformer Compartment
- Utility Voltage Transformer Fuse Compartment
- Utility Current Transformer Compartment
- Utility Service Termination Compartment
- Utility Metering Compartment

When labeling indoor non-raintight (NEMA-1) or outdoor raintight (NEMA-3R) service equipment, labels shall be placed on the exterior access door to the appropriate utility compartment.

8.0 Safety Grounding Provisions

A section of bare bus, four inches above and below the current transformers, shall be provided to permit the application of Company safety grounds. As an alternate, a grounding perch may be provided on the line and load side of the bus at each current transformer location.

9.0 Meter Panel and Doors

Meter panel and hinges are to be designed to adequately support 25 pounds of load applied at the unsupported end with 1/8-inch (maximum) sag when opened. A #4 AWG flexible braided bond wire shall be installed across the hinges. A single-full width and height meter panel door is required. The door shall be adequately hinged, open to 90 degree minimum, and support the weight of metering equipment. Meter doors located in front of the current transformers shall have an insulated barrier between the meter door and current-transformer compartment (see Figure 7–13). In addition, see Subsection 20.3 for meter socket details.

10.0 Basic Impulse Insulation Level Rating

Basic Impulse Insulation Level (BIL) for the metering enclosure shall not be less than that for the customer's associated switchgear. Reference shall be made to ANSI Standards for the minimum acceptable BIL ratings for high-voltage switchboards built to the listed nominal voltages shown in the applicable tables "Voltages and Insulation Levels for AC Switchgear Assemblies" and as tabulated for Metal-Enclosed Interrupter Switchgear. The metering cubicle shall be labeled with the BIL rating.

Table 7–1: Basic Impulse Insulation Level Rating

Rated Maximum Voltage (kV)	Impulse Withstand (BIL-kV)
4.76	60
8.25	75
15.0	95
27.0	125

Note(s):
1. The minimum acceptable BIL rating and insulation class on 16340 V switchboards shall be at 125 kV.

11.0 Ventilation Openings

Ventilation openings in covers and doors with provisions for utility seals shall be protected by a rigid barrier. Barriers shall be dimensioned and located so that no live part may be viewed past the barrier when looking through the ventilation opening. Barriers shall be secured to covers and doors with devices that may not be loosened from the outside.

12.0 Door Access to Metering Cubicle(s)

For outdoor installations (NEMA-3R), working clearances at the job site may determine if the manufacturer is to furnish either a single- or double-full height, hinged access door. In addition to provisions for a three-point latching mechanism with hardware for the installation of a Company padlock, all external doors shall, when opened, be equipped with a device to hold the door(s) open to 90 degrees or more.

13.0 Weatherproofing and Locking

Enclosed equipment with weatherproof doors shall meet the following requirements:

- The meter panel or door shall be hinged on the side opposite that of the outer door on the weatherproof units or hinged on the same side as the outer door without subjecting the metering equipment to damage.
- Designs shall permit a 90 degree minimum opening of the meter panels or doors with the meters and test facilities in place.
- The weatherproof doors may be omitted if the equipment is located indoors. If the outer door is omitted, the meter panel must be lockable.
- The front weatherproof door shall be a single door equipped with a three-point latching-type handle to accommodate a Company-installed padlock.
- The door shall be equipped with a device to hold the door open to 90 degrees or more.

14.0 Current-Transformer and Voltage-Transformer Installations

Current transformers and voltage transformers, meters, testing facilities, and all secondary wiring from the transformers to the meters will be furnished and installed by the Company.

15.0 Bus Bars and Conductors

15.1 Approved Bus Material

Only copper or plated aluminum bus shall be used in the metering and terminating enclosure. Aluminum bus shall be identified with the plating process where the service cables terminate and the current transformers are mounted.

15.2 Bus Dimensions and Spacing

Maximum bus size shall be 3/8" × 4". Minimum bus size shall be 1/4" × 2" unless otherwise indicated on specific drawings. Bus sizes outside of these limits require special engineering and consultation with the Company.

15.3 Bus Installation for Current Transformers

When the main switch or circuit breaker enclosure is adjacent to and on the source side of the metering enclosure, connections from the load side of the main switch or circuit breaker to the line side of the current transformers shall be made using bus bars.

15.4 Conductors and Bus Bars Passing through Compartment Walls

Where buses or conductors pass through compartment walls, through-the-wall bushings or insulated construction with full-voltage rating of the switchboard may be used. Refer to ESR–7, Figure 7–1.

16.0 Metering Compartments — General

16.1 Insulated Neutral Termination

When an insulated neutral is required, it shall have full voltage-rated insulation from the metering cubicle. Consult the local Service Planning Office to determine if an insulated neutral is required.

16.2 Instrument Transformer Mounting

Voltage-transformer and current-transformer mounting platforms are to be provided by the manufacturer.

16.3 Voltage-Transformer Mounting (Unistrut)

The front unistrut mounting bar shall position the voltage-transformer mounting holes nine (9) inches from the inside of the voltage-transformer compartment access door (see Figure 7–3 for details). The rear unistrut mounting bar shall be continuously adjustable 5 inches (minimum) to 13 inches (maximum) from the front unistrut bar.

16.4 Current Transformers and Bus Link

Unless otherwise directed by the Company representative, each switchboard bus drilling and dimensions for installing current transformers shall accommodate the pattern for 800 A or less current transformers of the proper voltage insulation class (see Figure 7–4). Current-transformer center phase position shall be bused straight through with removable links on all high-voltage switchboards. This bus provided by the manufacturer, shall consist of a removable link dimensioned the same as the current-transformer bars on the metered phases.

16.5 Test Transformer Supports

Phenolic test transformer supports for each phase (two – 1/2" × 2" × 8"), or a continuous bar of insulating material across the compartment, is required for switchboards 4160 V and below (see Figure 7–13).

16.6 Phase and Neutral Taps for Fuses and Voltage Transformers

Lugs for voltage-transformer phase and neutral connections shall be provided in the voltage-transformer compartment. Mechanical lugs shall allow for #8 AWG through 1/0 AWG connections.

16.7 Fuse Specifications

Voltage-transformer fuses will be furnished and installed by the Company. Access to fuses shall be provided through the voltage transformer compartment only. The manufacturer shall provide the mounting clips for indoor current-limiting fuses with mounting clips separation and fuse ferrule diameter appropriate for the voltage rating of the equipment (see Table 7–2).

16.8 Voltage Transformer Disconnect Requirements

For personal safety, Kirk® key (or equivalent) interlocking is required between the voltage transformer disconnect switch and the voltage transformer access compartment door. The voltage transformer compartment cannot be entered until all of the following conditions are met:

- The gang-operated disconnect is fully and visibly open—and visibly grounded.
- When the voltage transformer disconnect is fully open, the main disconnect blades must ground automatically.
- The disconnect switch is locked open with a key interlock system.

The interlock system must prevent closing of the disconnect switch without first closing and locking the voltage transformer compartment. Two interlocking keys shall be provided.

Primary and grounding contacts for the voltage transformer disconnect blades shall be of the blade and jaw design or equivalent to ensure continued adequate contact.[1/]

Operating handle or lever of the voltage transformer disconnect switch shall be padlockable in the closed position.

The voltage transformer disconnect shall be tapped ahead (supply side) of the utility-metering current transformers.

The voltage transformer compartment door shall provide unobstructed access to the voltage transformer and fuses.

17.0 Sealing of Metering and Pull Sections

Service-terminating pull sections and metering sections shall be fully enclosed. All hinged panels that will give access to these sections or to any secondary meter wiring shall be sealable. Bus ports through the side barriers of the metering section shall be closed with phenolic barriers or otherwise arranged to prevent access to the metering section.

18.0 Service Connections of Switchboards

18.1 Underground Service

Underground service will be supplied under the Company's rules covering underground service from the source. See ESR–4 relative to underground service from transformer vaults, rooms and outdoor enclosures. See ESR–3 relative to underground service from an overhead source or from an underground distribution system.

18.2 Underground Service-Termination Pull Section

Every switchboard to which underground service is to be supplied by the Company shall be equipped with a fully-enclosed service-terminating pull section by the manufacturer. The pull section will be a part of the switchboard service section(s).

The detailed requirements of an underground pull section showing the cables and terminations, as installed by the Company, is shown in Figure 7–6.

The maximum load that will be supplied through a single cable or set of cables in a single conduit will be determined by the Company. Consult the Company for conduit requirements.

[1/] Wiping or pressure contacts are not acceptable.

The underground service conduit shall normally enter the bottom of the pull section as shown in Figure 7–6. Where this method of entry does not appear to be practical, consult the local Service Planning Office. Any change will require an increase in the size of the pull section together with special terminating provisions.

19.0 Service and Meter Switch

The manufacturer or contractor shall furnish and install a single main service disconnect with every switchboard in which the Company's metering equipment is to be installed. Such disconnect shall control all of, and only, the energy carried by the service to and registered by the metering equipment. Where more than one set of metering equipment is supplied through the same service, a main service disconnect, as required by the California Electrical Safety Orders, shall be installed on the supply side (cold sequence) of all individual meter switches in the installation.

Where a customer is served directly from a distribution circuit (or an autotransformer), the main disconnect shall be a circuit breaker with overcurrent and ground-relaying provisions.

Where a customer is served by a dedicated two-winding power transformer, it is likely that the main disconnect will need to be a circuit breaker with overcurrent protection and ground-relaying provisions. Consideration will be given to the use of a switch and fuse combination with current-carrying and interrupting capacities acceptable to the Company only if it is determined that the fuse size being considered will properly coordinate with the Company's dedicated two-winding power transformer protection. Consult the local Service Planning Office regarding available fault duties and protection coordination.

19.1 Location — Metering Equipment, Wiring, and Devices — 2400 V; 4160 V; 4800 V; 7200 V; 12000 V; and 16500 V Services

The main service disconnect shall be installed and connected to the service on the supply side of all metering equipment, wiring, and devices except as follows:

- Where an electrically operated main meter and service breaker is operated by alternating current, a transformer for supply of such control power and/or for heating, lighting and other incidental use within the switchboard may be installed in the switchboard connected to the service through suitable protection on the supply side of the main service breaker. The secondary leads from this transformer shall be taken through a four- or seven-clip meter socket connected on the supply side of all load. If or when power from this meter is to serve voltage-sensing relays or other types of equipment that will render removal of this meter for testing or replacement prohibitive, test bypass facilities shall be provided by the manufacturer, and wired through the four- or seven-clip meter socket on the meter door (see Figure 7–10 and Figure 7–12 for requirements).
- On installations where this meter can be removed without having an adverse effect on the main power source, a meter switch or test bypass facilities in the control supply circuit is not required. The manufacturer shall indicate this characteristic on drawings.
- The Company will install a meter in the four- or seven-clip meter socket installed on the meter panel for the control supply circuit. The energy supplied through this meter will be billed as a separate account.
- Where specifically permitted by the Company, apparatus for voltage indication only may be installed (unmetered) on the supply side of the main disconnect. A maximum low-voltage fuse size of 1.0 A is allowed for this application.
- When approved by the Company, lightning arresters may be installed on the supply side of the main breaker. They shall be located in an area separately barriered from sections containing utility equipment (pull sections and/or meter sections).

19.2 Mitigation of Customers Control Power Transformers (CPT) Potential Ferroresonance Conditions

If the CPT is connected to the SCE system on the supply side of the customer's main service disconnect (or customer's main breaker) within the primary switchboard, the Company shall install a three-phase, loadbreak gang-operated switch ahead of the primary switchboard to avoid any potential ferroresonant condition that may occur while energizing/de-energizing the primary switchboard.

20.0 Switchboard Metering Section

The design of the switchboard metering section(s) varies with the service voltage, the character of the metering equipment involved, indoor or raintight construction, and the point at which the load leaves the section. Acceptable types of switchboards have meters, instrument transformers and high-voltage test sections normally installed in one cubicle or section.

The detailed requirements for dimensions, clearances, bus, and compartments are shown in Figure 7–1.

Provisions for mounting voltage transformers shall be made in the utility voltage transformer compartment which will permit their primary terminals to be conveniently connected to the fuse carriers. This location must also provide access for the easy installation and removal of the voltage transformer fuses.

20.1 Neutral Conductor — 4160 V Service

All switchboards for 4160 V service (except those with resistor-grounded neutrals) are metered four-wire and employ three 2400 V voltage transformers, each connected between a phase and neutral. This arrangement requires a separate continuous neutral conductor (5 kV insulated) to be installed into the voltage transformer compartment from the service-cable terminating pull section. Where the customer uses a three-wire system, the neutral can be a #6 conductor as it supplies only metering potential. The separate neutral conductor from the terminating pull section to the voltage transformer compartment shall be supplied by the manufacturer.

When the neutral of a 4160 V circuit is grounded through a resistor, (three-phase, three-wire), the neutral shall not be brought into the metering compartment, and two 4160 V transformers shall be used with two current transformers. The center-phase bus link shall be provided by the manufacturer.

20.2 Handles on Hinged Panels

Each hinged panel giving access to utility sections/compartments shall be sealable and equipped with a handle opposite the hinged side. Hinged panels are not limited to size.

20.3 Meter Panel Details

Meter panels or doors shall include a minimum of two 15-clip meter sockets and two test switch openings (see Figure 7–10). If the switchboard requires control-power metering, a four-clip for single-phase, or seven-clip for three-phase meter socket with test bypass blocks shall be included.

20.4 Meter Clearances — Enclosed Meter Panels

Whenever a switchboard meter panel is in an enclosure, arrangements shall be made which will provide working clearance around and in front of the meters, test switches, phasing transformers, and so forth. The enclosure depth in front of the meter panels shall be at least 11 inches. The meter heights shown in ESR–6 will apply.

20.5 Meter Sockets and Test Blocks

All meter sockets, 100 A test bypass blocks, and related wiring for control power metering (four- or seven-clip socket) shall be provided by the manufacturer. Conductors between test bypass blocks and control power source shall be identified by phase and line or load. The manufacturer is to terminate the control power-metering conductors at the test bypass blocks (line-load sequence) and four- or seven-clip meter socket (see Figure 7–12). Labels identifying LINE and LOAD sequence shall be placed under the test blocks on the panel.

20.6 Meters

Meters shall be installed in weatherproof switchgear (NEMA-3R) when outdoors. In certain areas, a walk-in enclosure for the metering equipment may be required due to unusual weather conditions. Consult the local Service Planning Office for requirements of outdoor installations.

20.7 Test Switches and Phasing Transformers

Test switch and phasing-transformer cutouts on meter panels shall be provided as illustrated in Figure 7–11. The manufacturer is to provide a removable plate with each meter-panel cutout.

20.8 Meter Locations Prohibited

The prohibited meter locations specified in ESR–5 apply to meters on all switchboards.

20.9 Barriers

Specific switchboards, designed with metering door in front of current transformers, shall have a full height and width insulated barrier between the meter panel or door and the current transformer compartment to isolate the worker from any high-voltage conductors. A barrier is not required when metering is located in front of the voltage-disconnect compartment (see Figure 7–13).

20.10 Metering Installation

Do not install any conductors in the switchgear or the utility side or customer side until all metering work has been completed.

Figure 7–1: High-Voltage Metering Enclosure — 2,400 V Through 16,500 V Service

EUSERC No. 401

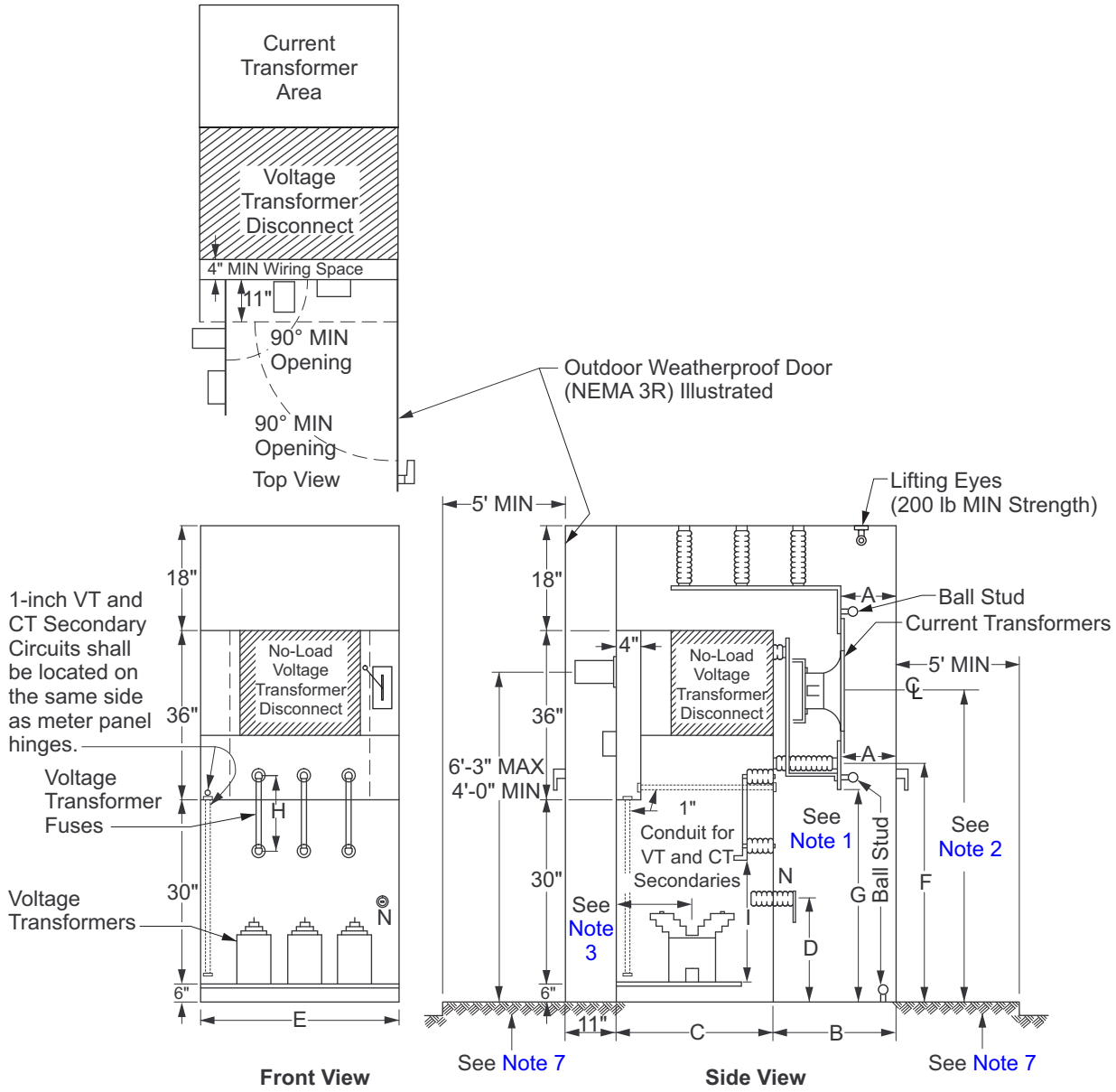

Note(s):

1. Not a cable termination section.
2. 48-inch MIN, 60-inch MAX; glastic barrier required if meter door is located in front of current-transformer area (see Figure 7–13).
3. See side view Figure 7–3.
4. This illustration depicts typical metering panel in front of voltage-transformer disconnects. Metering may be located in front of CT area. See Figure 7–13.
5. See Table 7–2 for dimensions of high-voltage metering enclosures.
6. Primary taps for VTs shall be connected to the line side of the metering CTs.
7. Required clear and level working space with five-foot clearance front and back.
8. Figure 7–1 represents a 4-wire installation for a 5 kV class test transformer support (see Figure 7–13).
9. Provide lock-box bolt pattern holes on hinge side of VT section door.
10. A full height and width metal safety barrier shall be provided on the backside of the utility termination compartment. Bus bars and conductors that are properly insulated are allowed to penetrate the safety barrier only if the conductor insulation system meets and passes the BIL insulation rating indicated (see Table 7–1).

Table 7–2: High-Voltage Utility Metering Section Dimensions

Specifications	Voltage Rating DIM		
	2,400 (in)	**4,160/4,800 (in)**	**7,200/17,000 (in)**
Minimum bare bus clearance ø-to-ground	3-1/2	3-1/2	6
Minimum bare bus clearance Ø-to-Ø	5	5	7-1/2
Dimension A	5 MIN 10 MAX	5 MIN 10 MAX	8 MIN 10 MAX
Dimension B	24 MIN	24 MIN	24 MIN
Dimension C	24 MIN	24 MIN	24 MIN
Dimension D	12 MIN	12 MIN	12 MIN
Dimension E	36 MIN	48 MIN	48 MIN
Dimension F	42 MIN 48 MAX	42 MIN 48 MAX	42 MIN 48 MAX
Dimension G ***Note:*** Not A cable termination section.	**N/A**	**N/A**	**N/A**
Dimension H: Fuse mounting clip center	8-1/2	8-1/2	11-1/2
Dimension H: Fuse ferrule diameter	1-5/8	1-5/8	1-5/8
Dimension I	18 MIN	18 MIN	18 MIN

Figure 7–2: High-Voltage Switchboard — 2400 V Through 16500 V Service

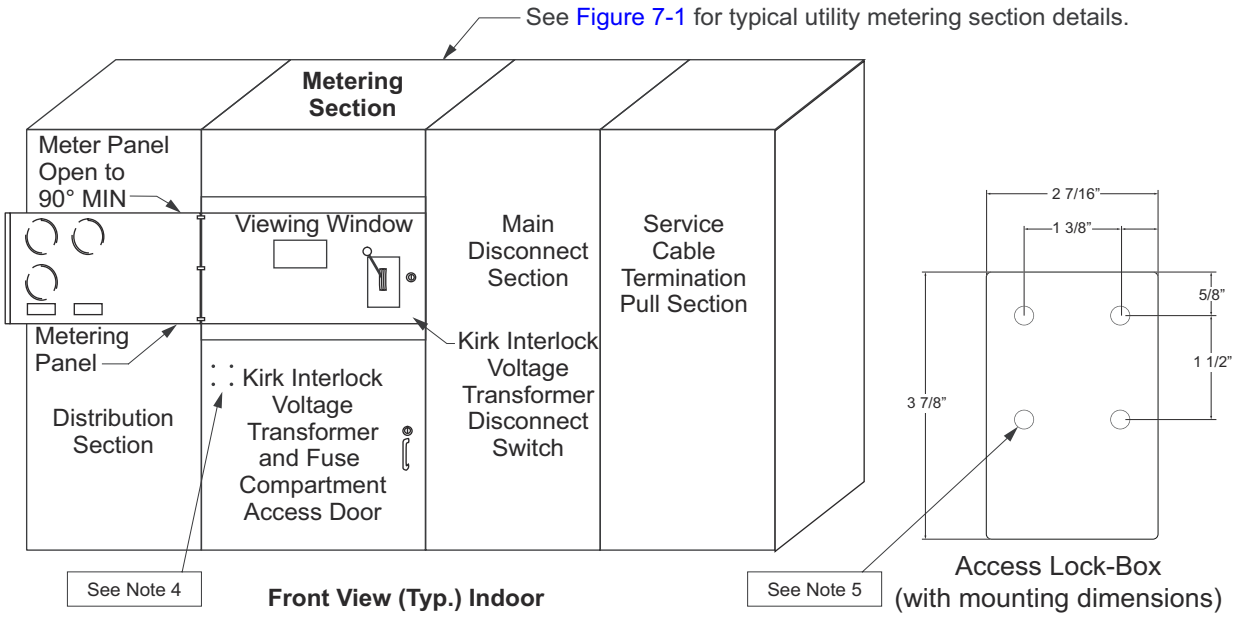

Front View (Typ.) Indoor

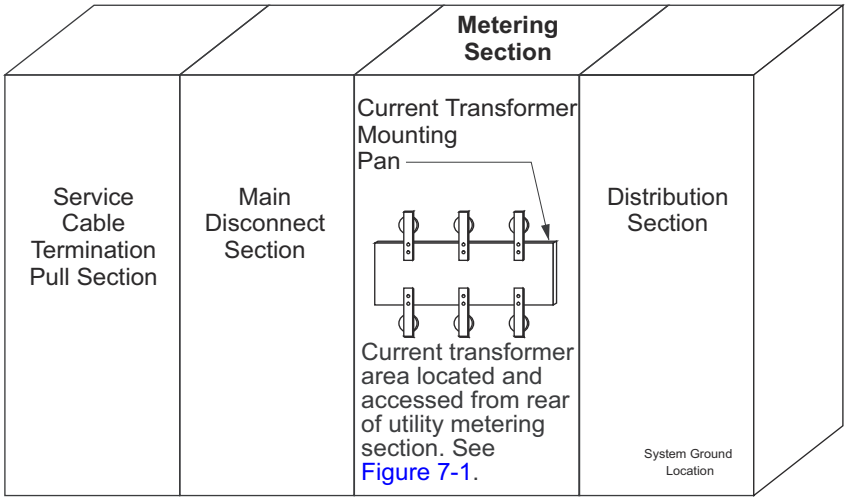

Rear View (Typ.) Indoor

Note(s):

1. This illustration depicts a typical metering panel in front of voltage transformer disconnects. Metering may be located in front of the CT area (see Figure 7–13).
2. Current-transformer center-phase position shall be bused straight through with removable links on all high-voltage switchboards.
3. At point of ground termination, customer is required to install a placard that states "System Ground Location." Placement of the placard shall be at the bottom of the hinge side of the door or panel cover. The size of the placard shall be a 4" height x 6" width. Customer to provide labeling that shall consist of machine-engraved laminated phenolic (or equivalent) placard. The placard shall have one-half of an inch black letters/numbers on white-colored material which is readily visible and mechanically attached by screws or rivets in the customer distribution section.
4. Provide lock-box bolt pattern holes on hinge side of VT section door. See Figure 7-2 for lock-box mounting dimensions.
5. Drill holes shall be 5/16 inches in diameter. 3 inches shall be maintained from the center of the topmost drill holes to the top of the door. 3 inches shall be maintained from the center of the drill holes closest to the edge of the hinged side of door.

Figure 7–3: Mounting Pattern for Voltage and Current Transformers — 2400 V Through 16500 V Service

EUSERC No. 407

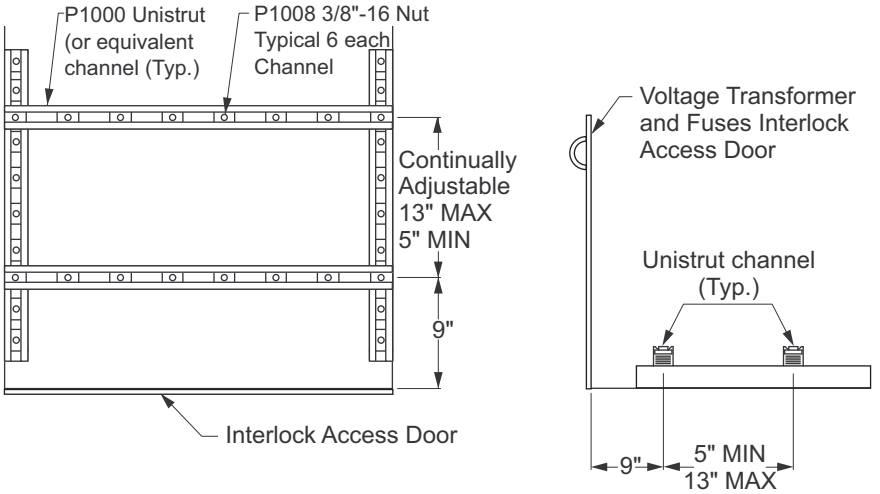

Top View of Compartment

Side View of Compartment

Voltage Transformer Mounting Rail Detail
(Unistrut Type)

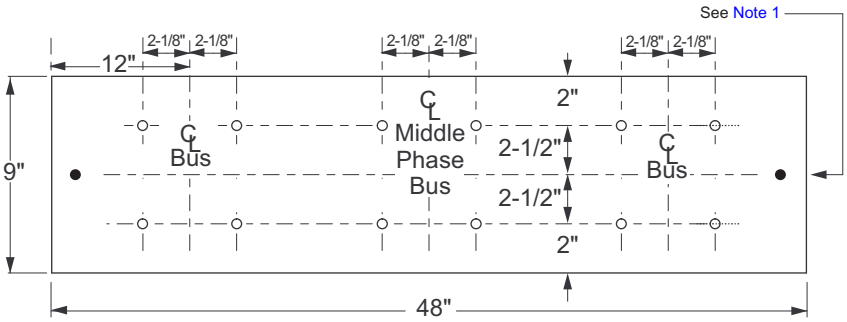

Current-Transformer Mounting Base
(See Figure 7-4)
(Tap all holes 3/8"–16 or use a cage nut.)

Note(s)
1. Provide a grounding lug (#6 AWG) at each end of the CT mounting base.

Figure 7–4: Indoor Current Transformer Dimensions for Metering Purposes — 5 kV Through 15 kV Classes

EUSERC No. 407

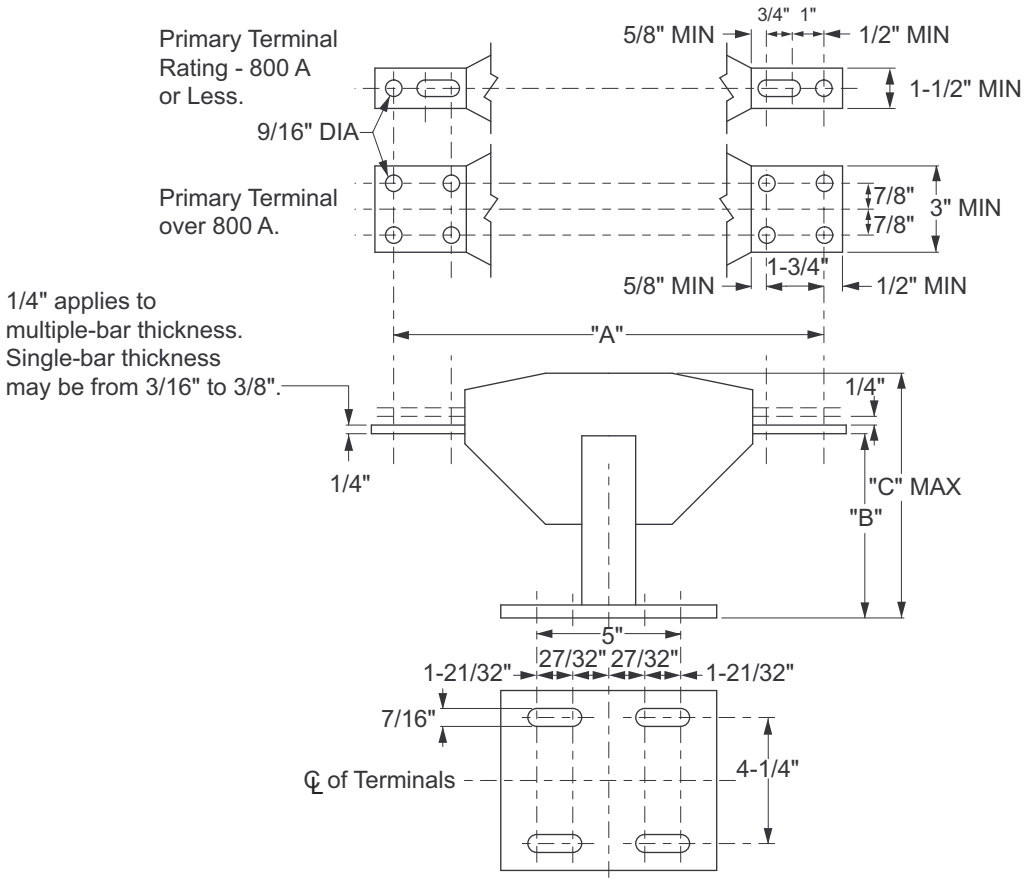

CT Mounting Hole Pattern
(See Note 4)

Note(s):
1. Insulation classes are 5-, 8.7- and 15-kV.
2. Basic impulse insulation levels (BIL) for these classes are 60-, 75- and 110-kV respectively.
3. Bus drilling and dimensions shall accommodate 800 A or less. See Subsection 16.4.
4. See Figure 7–3.

Dimensions[a/] — Inches[b/]						
Insulation Class (kV)	A		B		C (MAX)	
	Amp		Amp		Amp	
	0–800	1200–2000	0–800	1200–2000	0–800	1200–2000
5.0	14	—	5-3/4	—	8	—
8.7	15	—	8	—	10-1/2	—
15.0	22	26	9	5-3/4	11-1/4	13

a/ Contact the Company representative for dimensions above 15 kV.

b/ Unless otherwise indicated, tolerance equals plus or minus 1/16 inch.

Figure 7–5: Outdoor Voltage Transformer Dimensions — 5 kV to 15 kV Classes

EUSERC No. 416

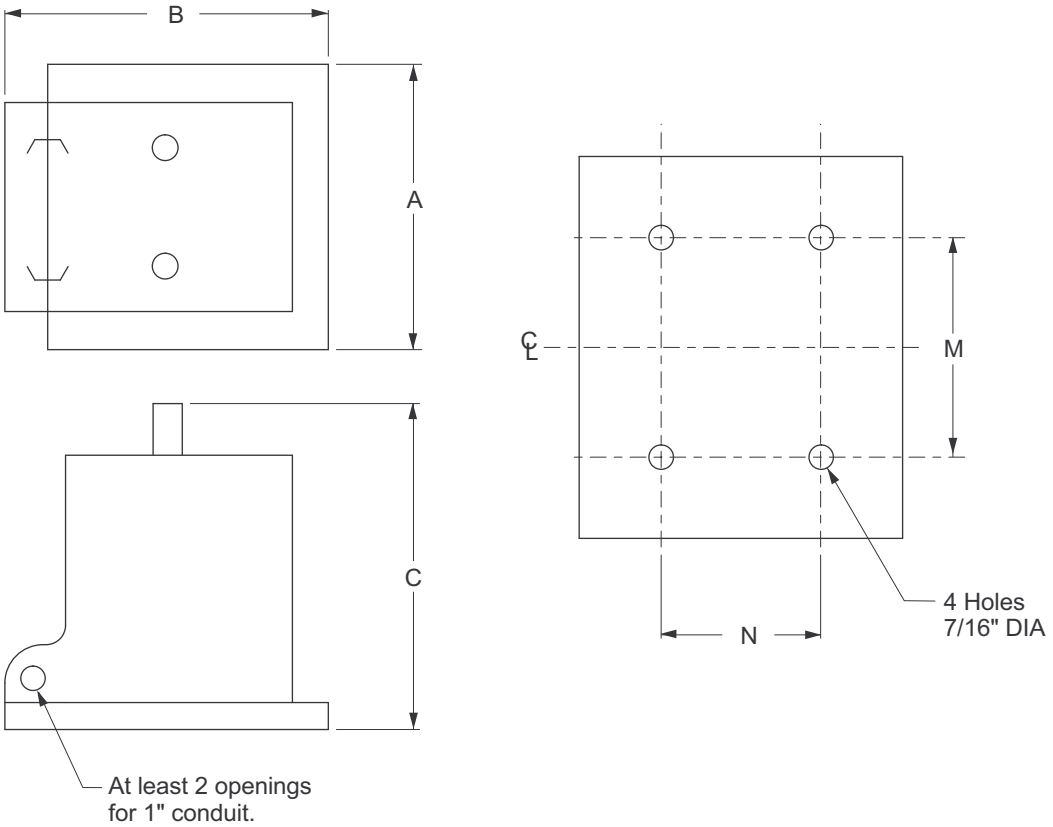

Dimensions — Inches[a/]					
Insulation Class (kV)	Without Mounting Brackets				
	Maximum Overall DIM			Mounting DIM	
	A	B	C	M	N
5.0	11-1/2	13	13	8-1/2	6-1/4
8.7	14-1/2	15-1/2	18-1/2	10	8-5/8
15.0	14-1/2	15-1/2	18-1/2	10	8-5/8

[a/] Unless otherwise indicated, tolerance = plus or minus 1/16 inch.

Figure 7–6: Underground Service-Termination Pull Section — 2400 V through 16500 V, 3- and 4-Wire

EUSERC No. 418

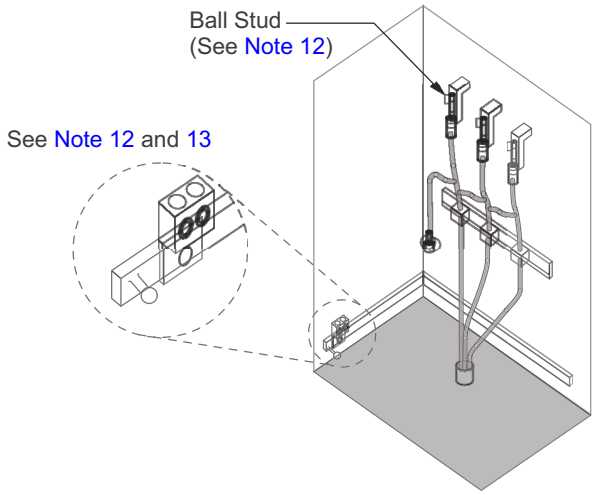

Minimum Bare Bus Clearances — 5 kV Class, 3-1/2" Ø-to-Grd, 5" phase-to-phase; 17 kV Class, 6" Ø-to-Grd, 7-1/2" phase-to-phase

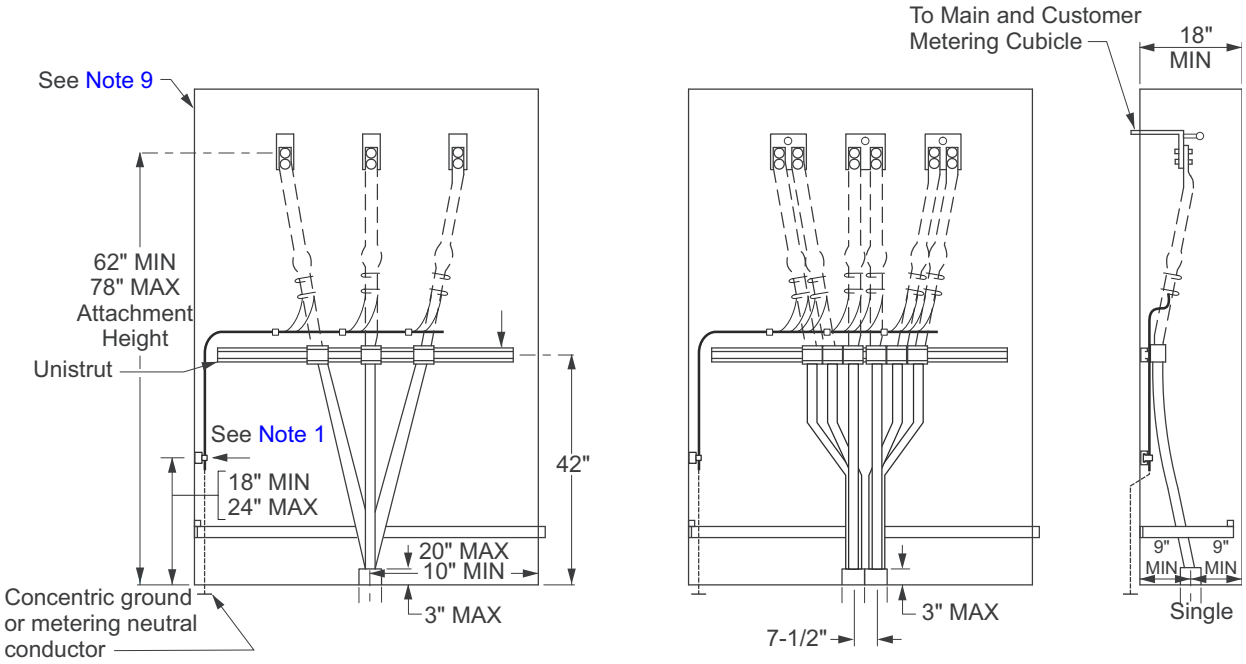

Note(s):

1. Provide an insulated terminal for service-cable concentric wires and/or service-neutral terminations. The connector shall accept a range of wire sizes from #2 through #4/0 AWG. A separate neutral conductor for 4-wire metering is to extend to the metering voltage-transformer compartment (see Subsection 20.1).
2. Service cable will be furnished and installed by the Company in accordance with the Company's rules and requirements for supply of underground service.
3. Accommodation will be required for one set of service cables for each 400 A or fraction thereof of service ampacity up to 800 A. Consult the Company for service termination requirements when the service ampacity exceeds 800 A. See ESR–6 for single position cable terminations drilling.

4. The Company will designate the number, location, and size of service conduits, type of pull section and number of terminations required.
5. The pull section may be in any suitable location on the switchboard, provided its hinged access panels face a clear accessible working space extending at least five feet in front of the section and is at least three-feet wide.
6. Furnish and install one piece of Unistrut P-1000 (or equivalent) channel as shown.
7. BIL for pull section shall not be less than that for the customer's associated switchgear.
8. No connections or customer equipment (except heating elements) are permitted in the underground termination pull section.
9. A single full length and width access door with three-point latch and padlock provisions is required. The door must open a minimum of 90 degrees and be latchable, to hold the door open. The access door shall maintain a 6-inch minimum clearance measured from bus to inside of access door.
10. Horizontal cross bus bar exiting the utility terminating compartment shall exit through a vertical protective barrier.
11. Non-access sides of pull section shall maintain minimum bare bus clearance.
12. Alternate multiple-cable pad is acceptable with four-inch (minimum) horizontal bolt separation on double cable enclosures.Ball stud to be located in front of the grounding lugs as shown in the illustration in Figure 7-6.
13. Ball stud, 1/2 inch–13 thread with insulating cover.
14. Ground bus extended to front-left or right. Grounding termination facilities shall be aluminum-bodies mechanical lugs with a range of #6–250 kcmil.

Figure 7–7: Busway Service Head — 601 V Through 34500 V, 3- Phase, 3- or 4-Wire

EUSERC No. 412

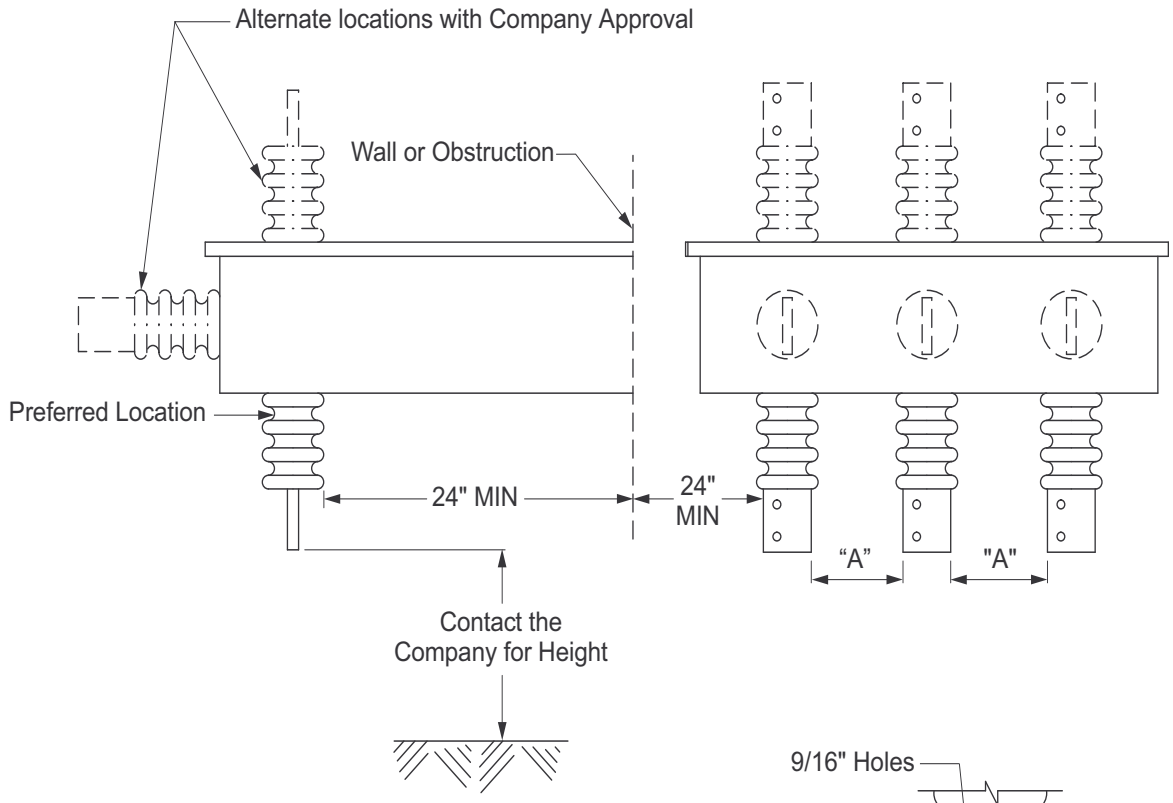

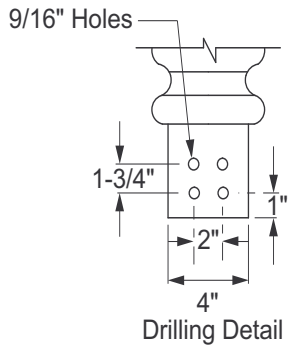

Table 7–3: High-Voltage Busway Service Head Dimensions

kV	DIM A (in)
5	7
7.9	10
12	12
16	12
34.5	24

Note(s):

1. Number of lug positions to be specified by the Company.
2. Bushings to be spaced as shown in table above.
3. All bushings shall meet NEMA standards for creep distance, except 17 kV which shall have 15-inch minimum creep distance.

Figure 7–8: High-Voltage Meter Panel Detail — kWh/kVARh Meter

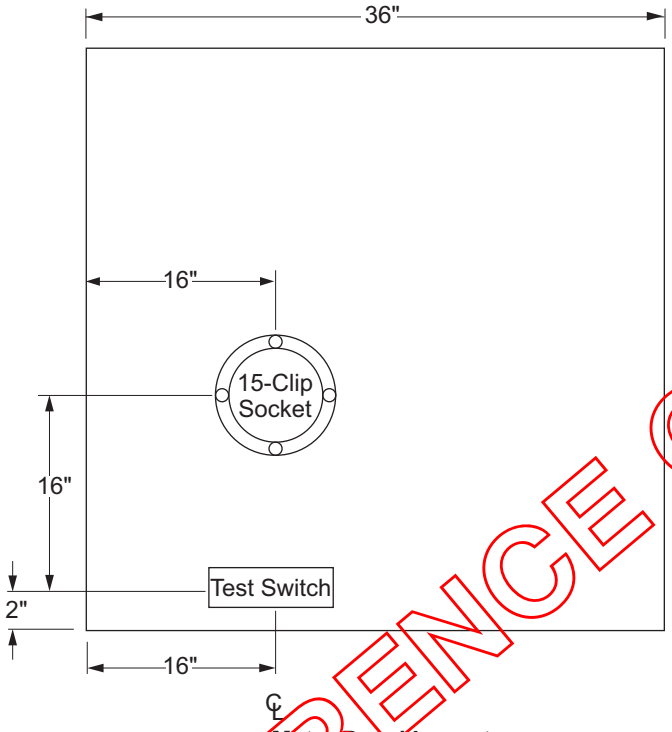

Meter Panel Layout

Note(s):

1. Provide ring-type meter sockets with clips as indicated. Screws used to mount cast meter sockets to hinged panels shall provide a 1/8-inch (minimum) clearance between the screw head and the back of the meter socket ring.
2. Meter panel door handle to be provided opposite hinged panel side.
3. For test switch layout, see Details "A" and "B," Figure 7–11.

FOR REFERENCE ONLY

Figure 7–9: High-Voltage Meter Panel Detail — kWh/kVARh Meter and Control Power Meter

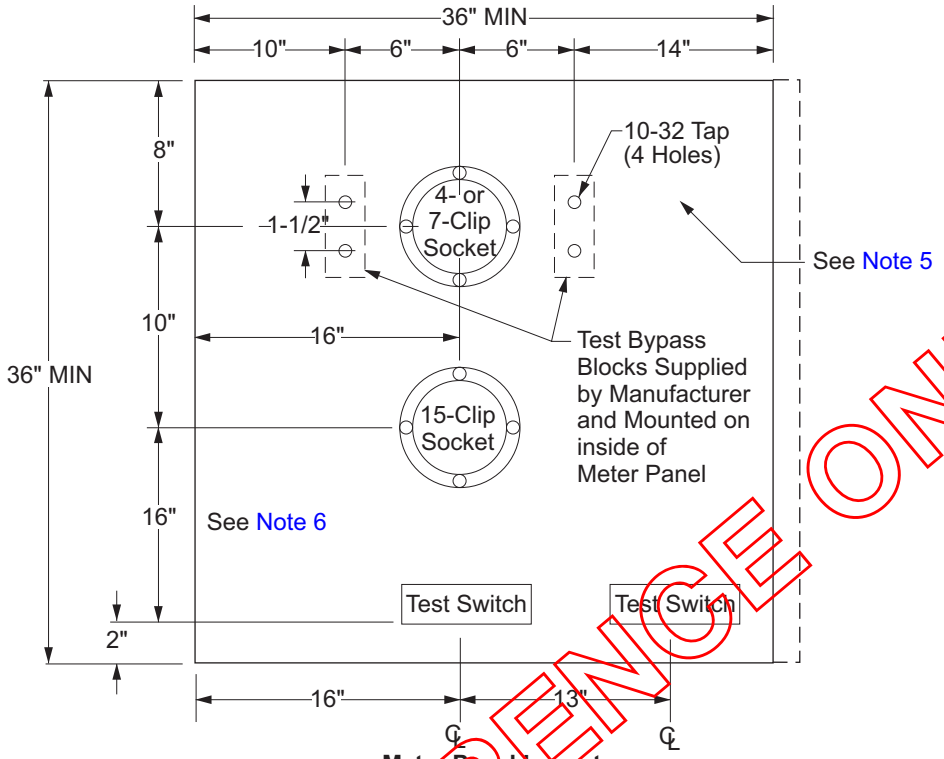

Meter Panel Layout

Note(s):

1. Provide ring-type meter sockets with clips as indicated. Screws used to mount cast meter sockets to hinged panels shall provide a 1/8-inch (minimum) clearance between the screw head and the back of the meter socket ring.
2. Control power secondary conductors provided for metering shall be terminated by manufacturer at test bypass blocks and 4- and 7-clip meter socket; wired line–load sequence.
3. Meter panel door handle to be provided opposite hinged panel side.
4. See Figure 7–12.
5. The panel may be extended on the hinged side when used with weatherproof (NEMA-3R) enclosures, and three meter panel door hinges are provided.
6. See Figure 7–11, details "A" and "B."

FOR REFERENCE ONLY

Figure 7–10: High-Voltage Meter Panel Detail — Dual Meter Socket and Control Power Meter Socket

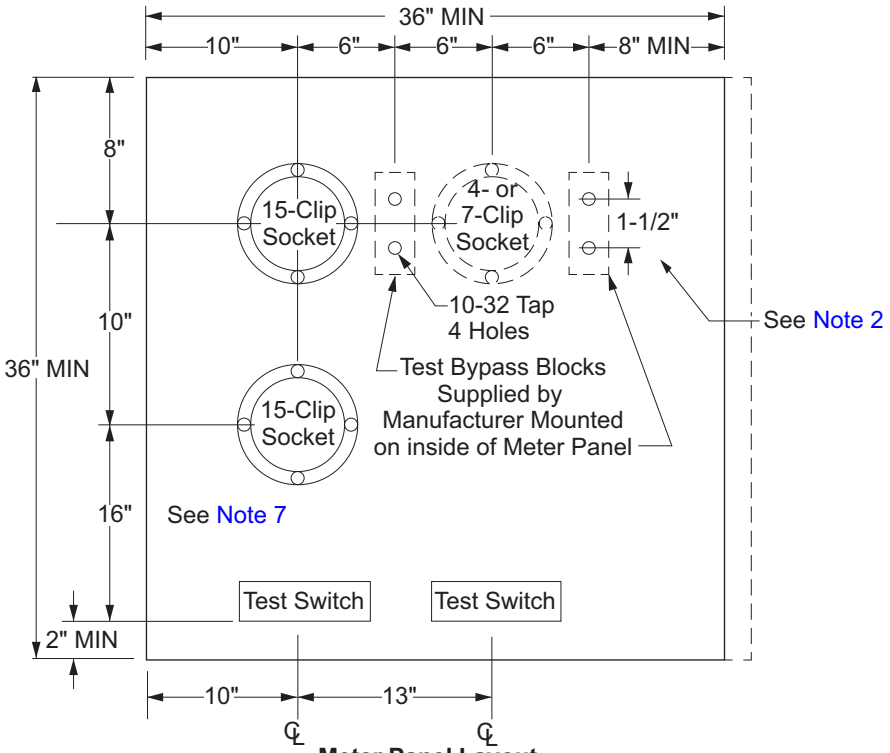

Meter Panel Layout

Note(s):

1. Provide ring-type meter sockets with clips as indicated. Screws used to mount cast meter sockets to hinged panels shall provide a 1/8-inch (minimum) clearance between the screw head and the back of the meter socket ring. The two 15-clip meter sockets shall be opposite the hinged door side.
2. Panel may be extended on hinged side when used with weatherproof (NEMA-3R) enclosures, and three meter panel door hinges are provided.
3. Control power secondary conductors provided for metering shall be terminated by the manufacturer at test bypass blocks and 4- or 7-clip meter socket; wired line–load sequence.
4. Conductors between test bypass blocks and control power source shall be identified by phase and line or load.
5. Meter panel door handle to be provided opposite hinged-panel side.
6. See Figure 7–12.
7. See Figure 7–11, Details “A” and “B.”

Figure 7–11: Test-Switch Layout and Removable Plate Details

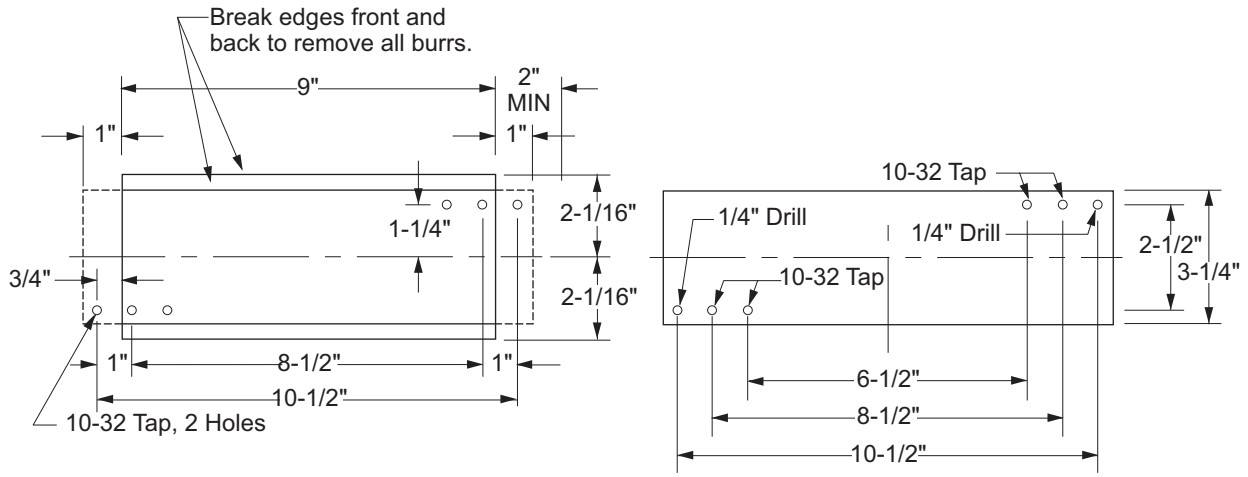

Test Switch Layout

Detail "A"

Removable Plate

Detail "B"

Figure 7–12: Control-Power Meter Socket — Test-Block Wiring Diagram

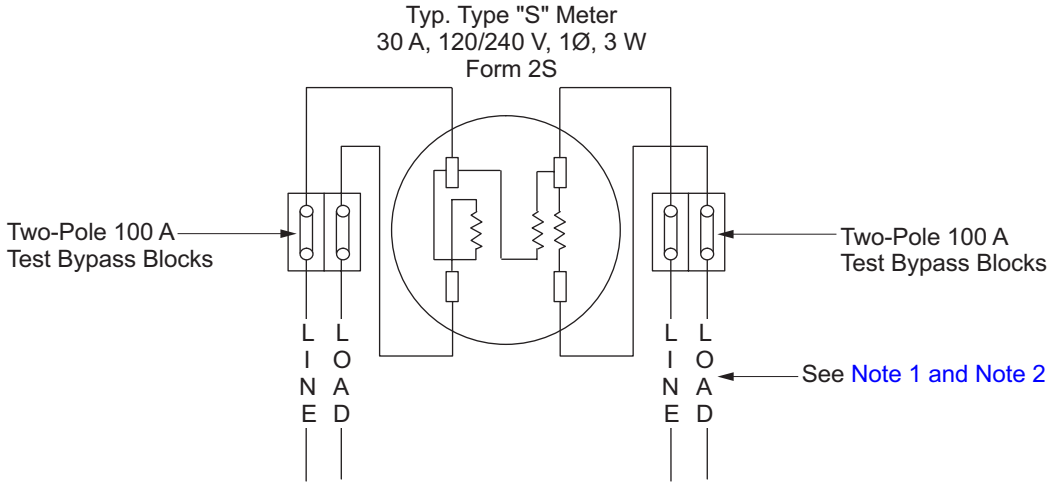

Back Side of Meter Panel/Door

Note(s):

1. Labels are to be provided by the manufacturer identifying LINE and LOAD. Labels shall be under each test block and placed on the back side of the meter panel/door.
2. LINE and LOAD labels shall be an engraved placard, 1-inch width, 3-inch height, with a red background and white lettering.

Figure 7–13: High-Voltage Switchboards' Barrier for Metering Located in Front of CT Area

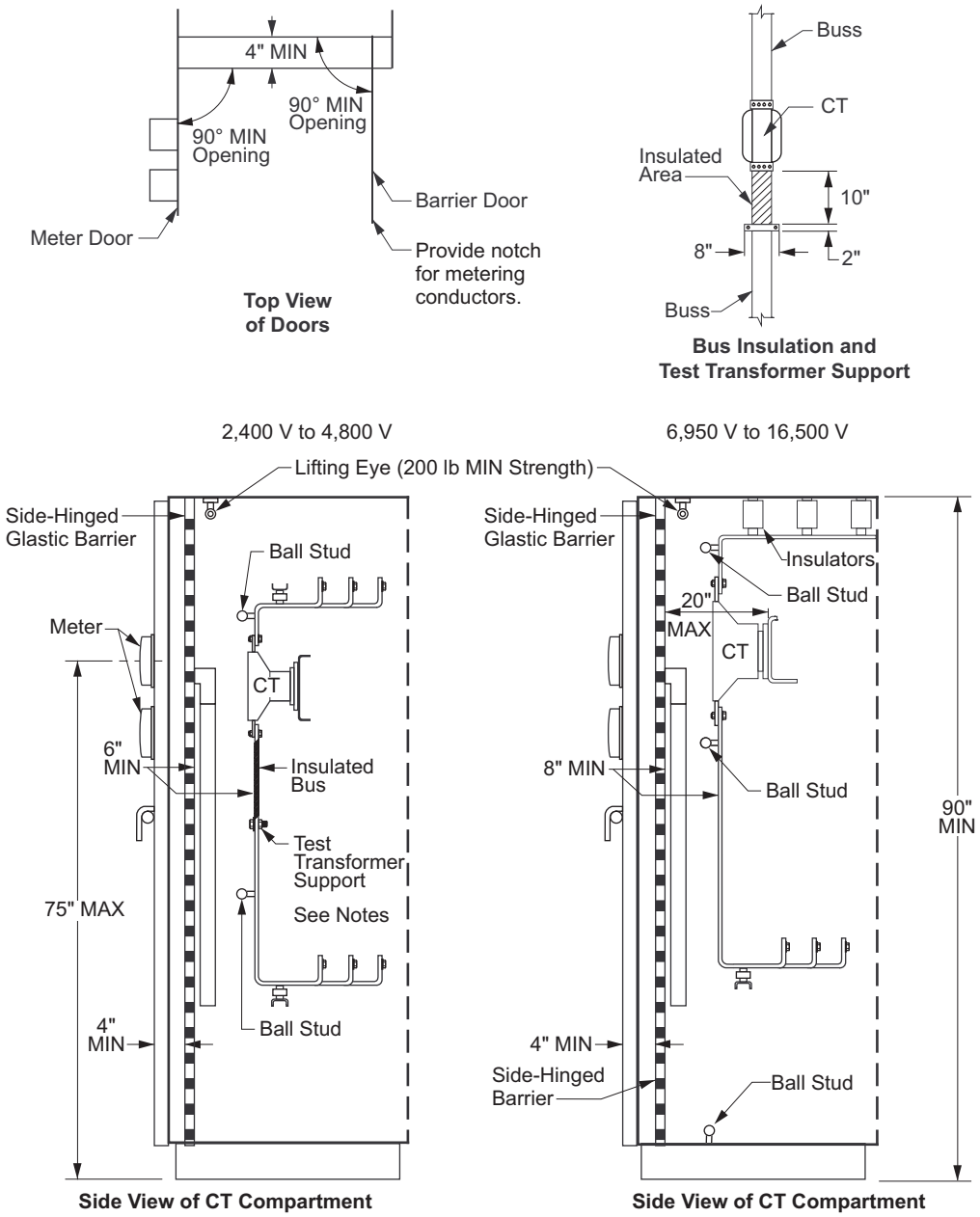

Note(s):

1. Bus insulation and test-transformer phenolic supports are required on switchboards 2400 V to 4160 V.
2. Round bus corner under tapped insulated area to prevent damage to tape.
3. Equivalent insulated bus may be used in lieu of taping.
4. A 1/2" × 2" × 8" phenolic test-transformer support is required on front and rear of each phase bus.
5. A 2-1/2" × 2-1/2" notch is required on the barrier door to allow metering conductors from the VT and CT areas to access meter sockets. Locate the notch on the barrier door at the hinged side of meter door, when barrier door is closed.
6. A continuous bar of equivalent insulating material and size may be installed across the compartment in lieu of individual supports.
7. Side-hinged glastic barrier shall be hinged opposite side of hinged meter door.
8. Voltage transformer conduit shall be located on hinged meter door side.
9. Provide opening slot on barrier to allow conductors to pass from voltage transformer conduit to meter door.
10. Opening handle shall be provided on barrier door.

Figure 7–14: Metering Enclosure, 38 kV Class, 3-Phase, 3-Wire, Application and General Enclosure Requirements

FRONT ELEVATION

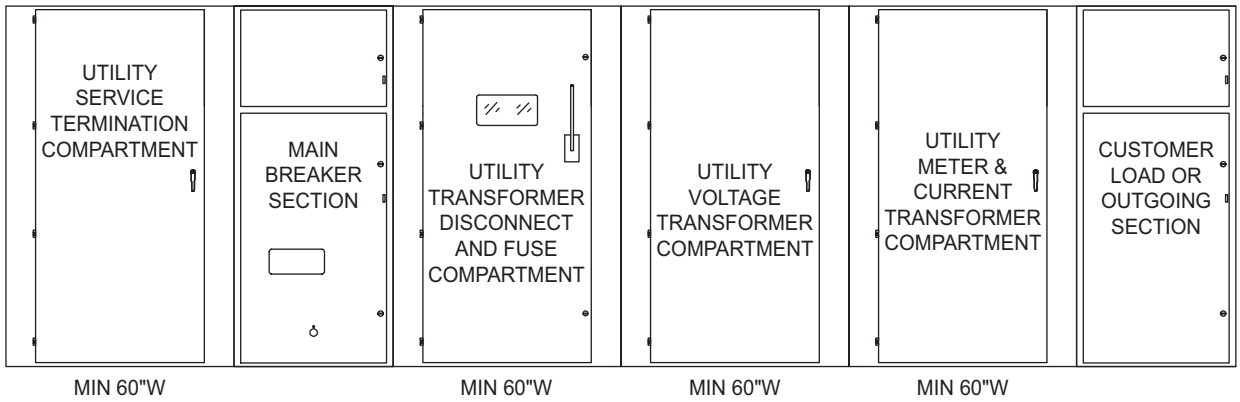

BASE PLAN VIEW

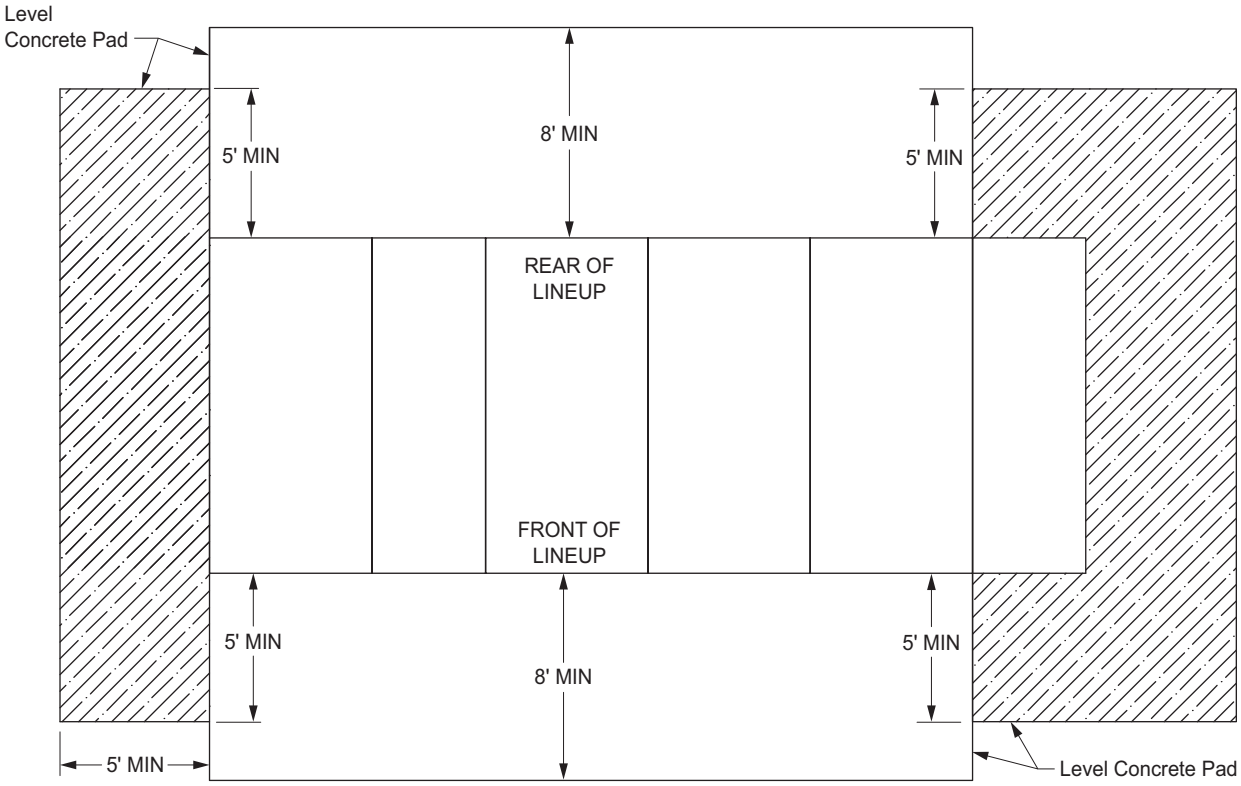

Note(s):

1. The metering enclosure is shown as a weatherproof (NEMA 3R) enclosure with hinged exterior doors and is intended for outdoor applications only. Overhead service arrangement is also available for 38 kV class.
2. Bus spacing in the enclosure compartments are to comply with ANSI/IEEE C37.20.2 and be listed and labeled by a United States Nationally Recognized Testing Laboratory.
3. The Basic Impulse Level (B.I.L.) for the meter enclosure shall not be less than 150 kV.
4. Provide 8 feet minimum front and rear access to utility sealed doors and covers and 5 feet minimum access aisle space around both ends of the lineup.

Figure 7–15: 38 kV Class, 3-Phase, 3-Wire, Utility Service Underground Termination Enclosure

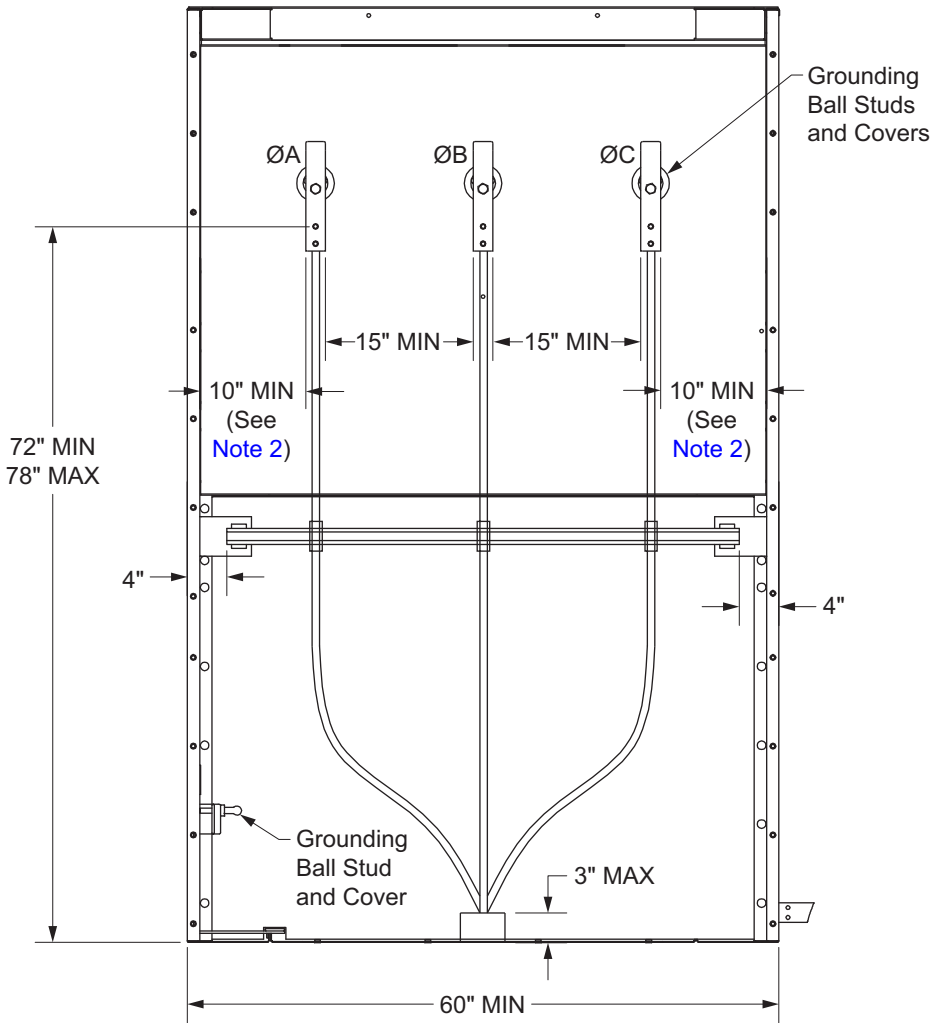

Figure 7–15.1: Front Interior View

Figure 7–15: 38 kV Class, 3-Phase, 3-Wire, Utility Service Underground Termination Enclosure *(Continued)*

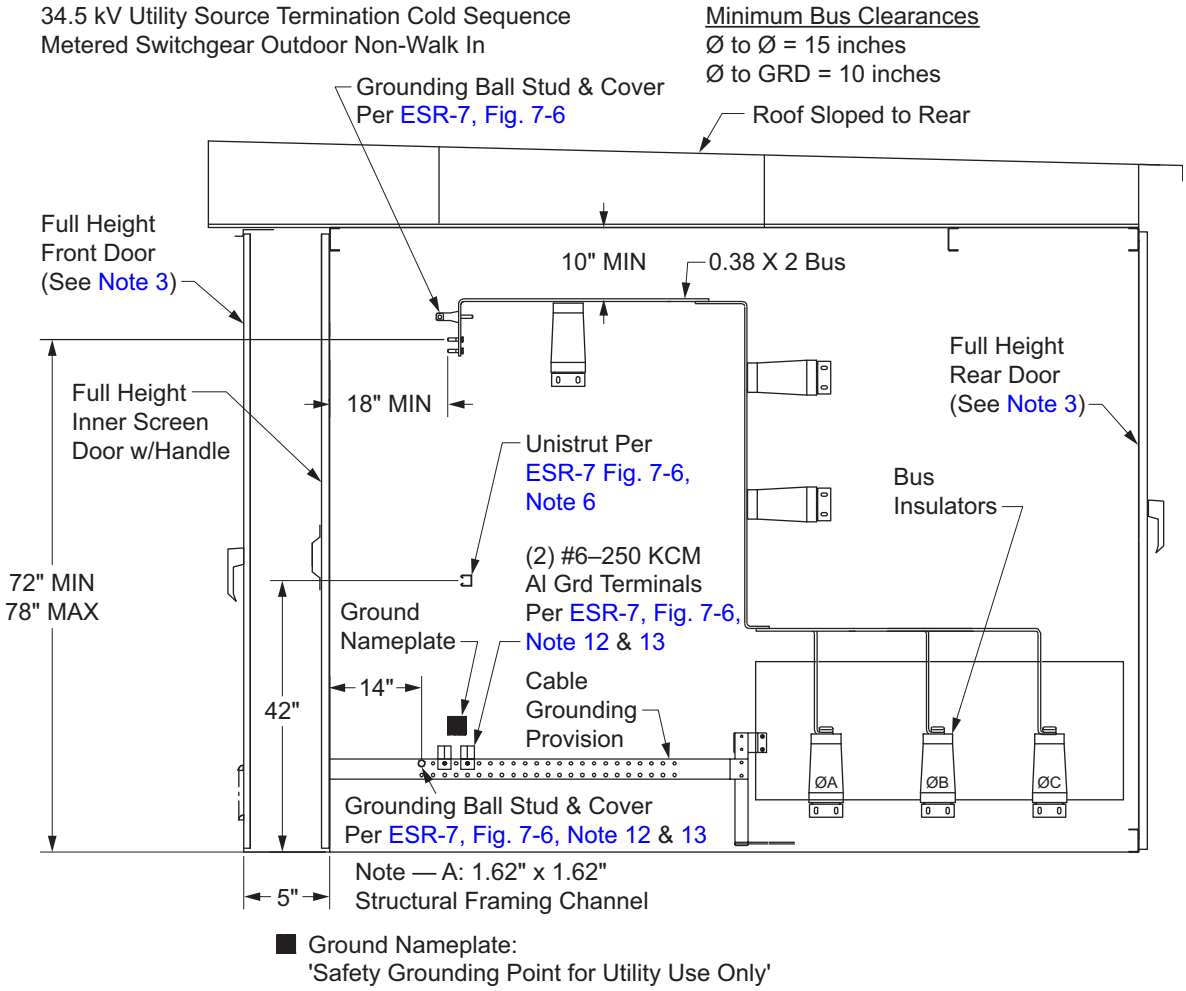

Figure 7–15.2: Right Side Sectional View

Note(s):

1. Cable terminating facilities shall be provided for the SCE's service supply conductors as follows: One landing position shall be provided for each phase bus and shall consist of two 1/2-inch diameter steel bolts extending from 1-1/4-inches to 1-1/2-inches from the mounting surface and spaced on 1-3/4-inch vertical centers.
2. Dimension from Phase Bus to Surface of Return Flange on Interior of Enclosure.
3. Both front and rear doors are full height with 3 point latch per ESR–7, Section 12.0 and padlockable with sealable studs per ESR–7, Section 17.0 with 90 degree door stop per ESR–7, Section 13.0 ground braids per ESR–7, Section 9.0.

Figure 7–16: 38 kV Class, 3-Phase, 3-Wire, Voltage Transformer Disconnect and Fuse Compartments

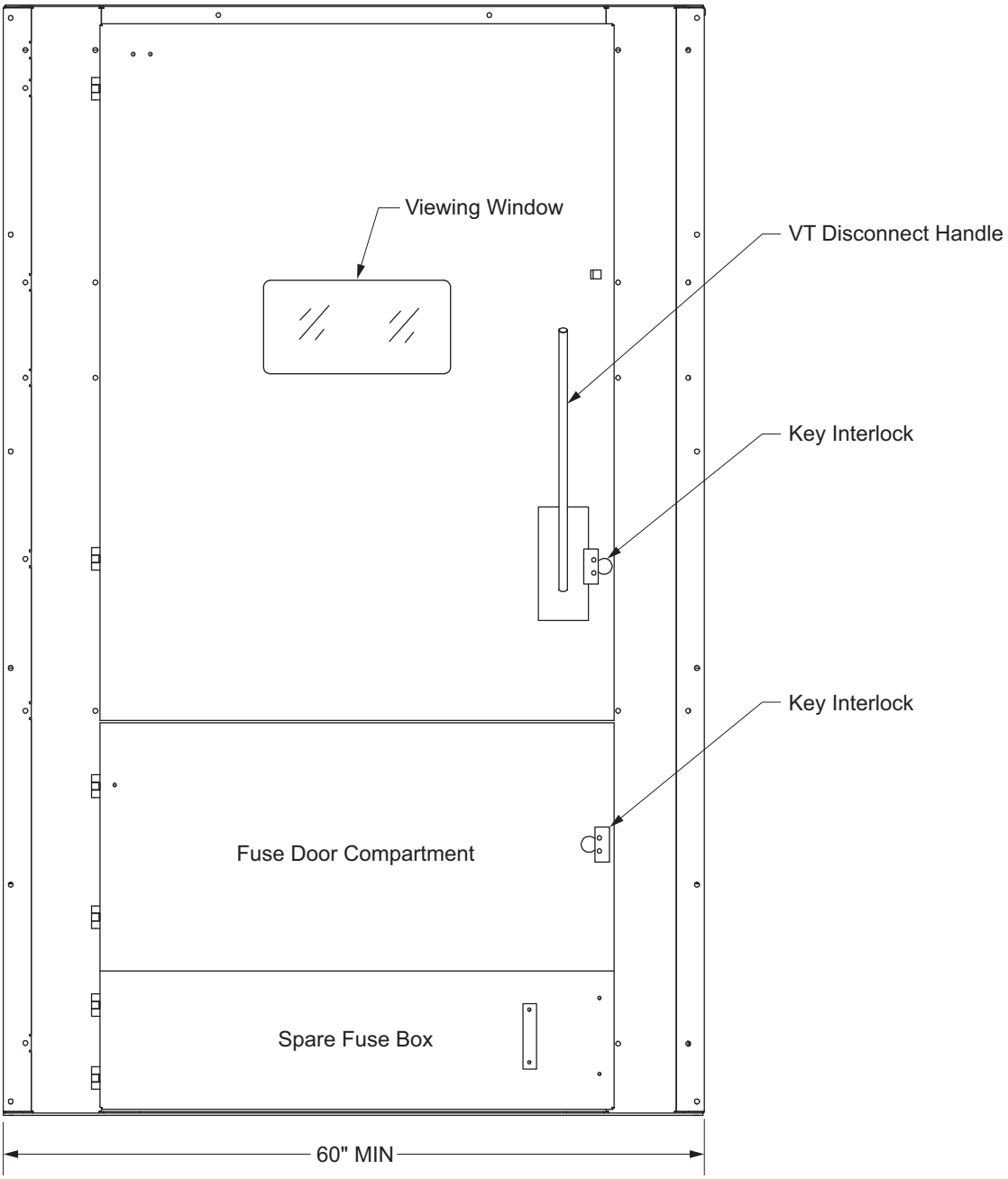

Figure 7–16.1: Front Interior View

Note(s):

1. Key interlock system consists of 3 locks and single key: VT disconnect, fuse compartment door, and VT compartment door.

Figure 7–16: 38 kV Class, 3-Phase, 3-Wire, Voltage Transformer Disconnect and Fuse Compartments *(Continued)*

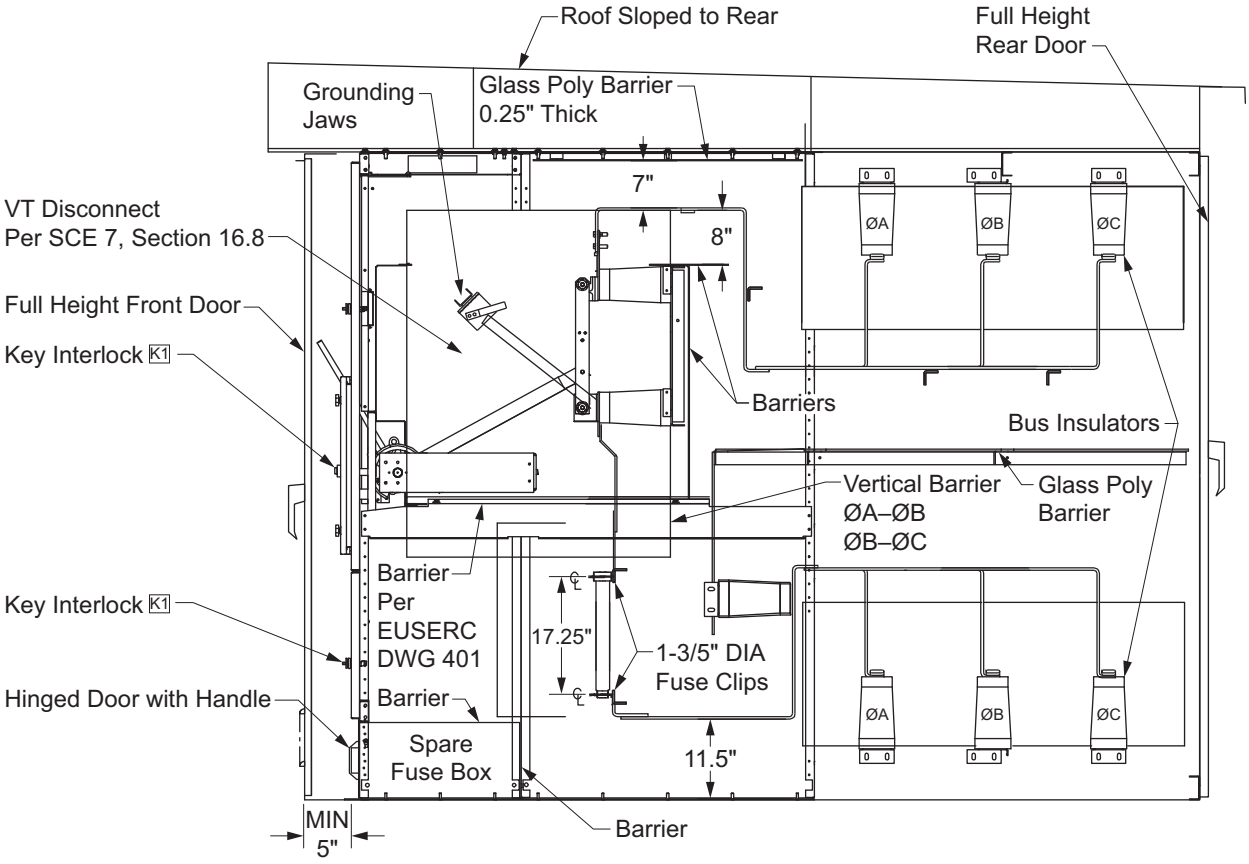

Figure 7–16.2: Right Side Sectional View

Note(s):

1. Minimum bare bus clearances are 10-inch phase-to-ground and 15-inch phase-to-phase in VT compartment.
2. Fuses are provided by SCE.

Figure 7–17: 38 kV Class, 3-Phase, 3-Wire, Voltage Transformer Compartment

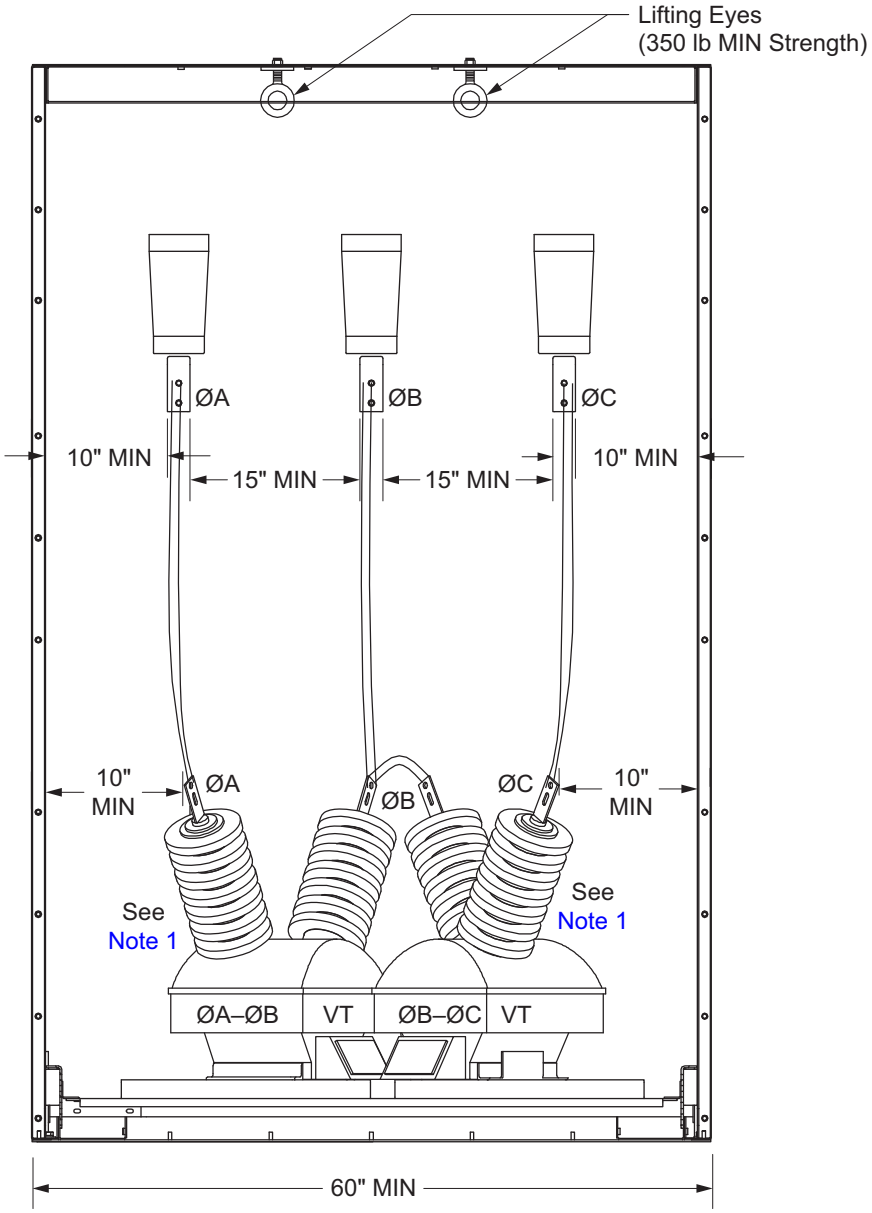

Figure 7–17.1: Front Interior View

Note(s):

1. Provided and Installed by SCE. Provisions by manufacturer.

Figure 7–17: 38 kV Class, 3-Phase, 3-Wire, Voltage Transformer Compartment *(Continued)*

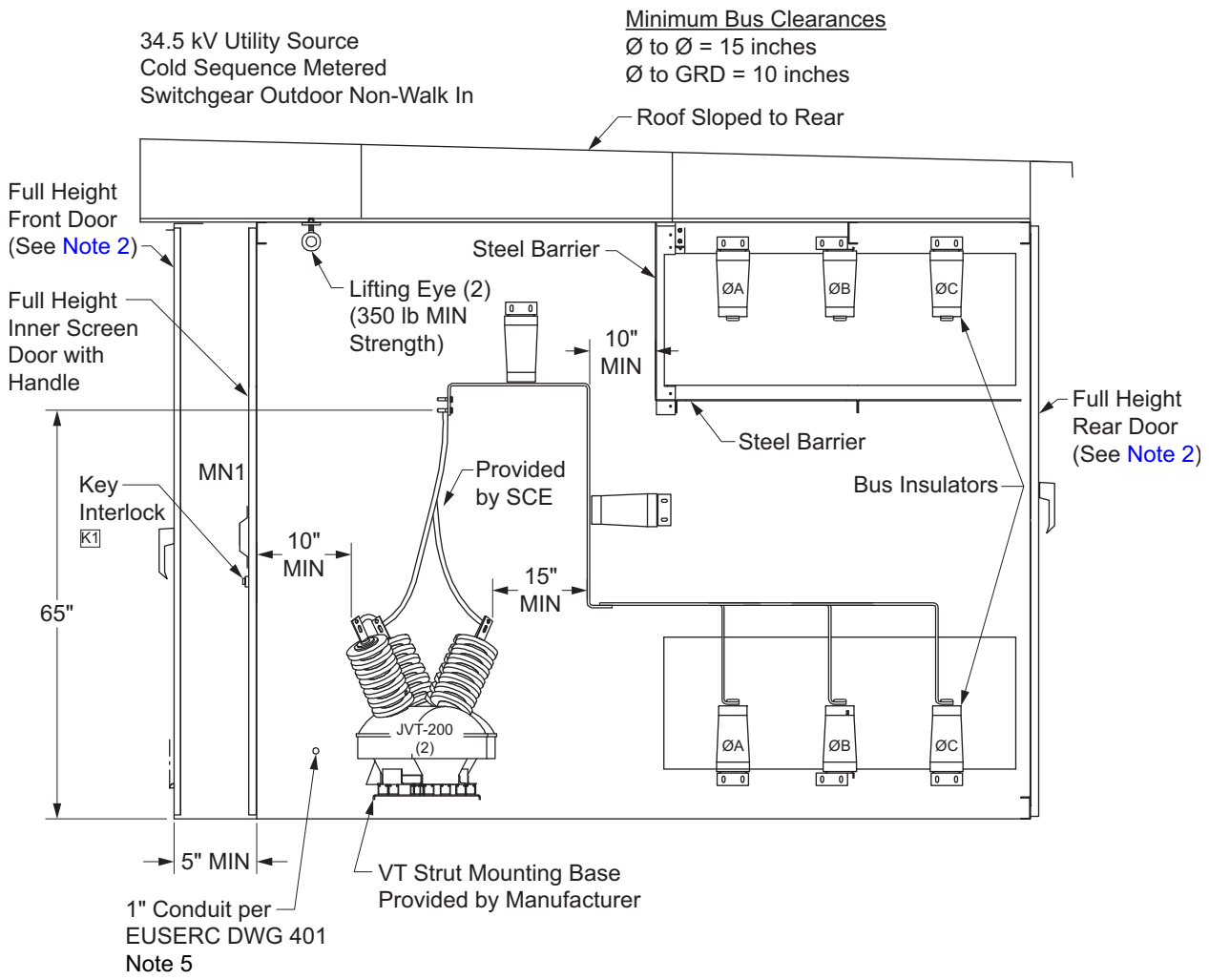

Figure 7–17.2: Right Side Sectional View

Note(s):

1. Voltage transformers provided by SCE.
2. Both front and rear doors are full height with 3 point latch per ESR–7, Section 12.0 and padlockable with sealable studs per ESR–7, Section 17.0 with 90 degree door stop per ESR–7, Section 13.0 ground braids per ESR–7, Section 9.0.

Figure 7–17: 38 kV Class, 3-Phase, 3-Wire, Voltage Transformer Compartment *(Continued)*

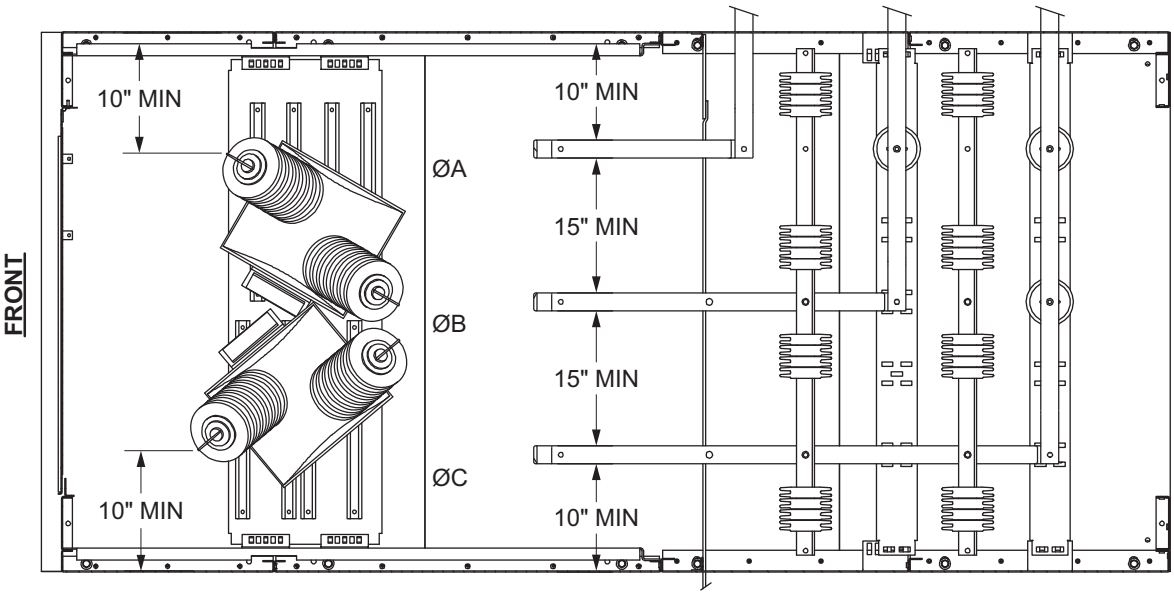

Figure 7–17.3: Top Sectional View

Figure 7–18: Voltage Transformer Strut Mounting Base Detail

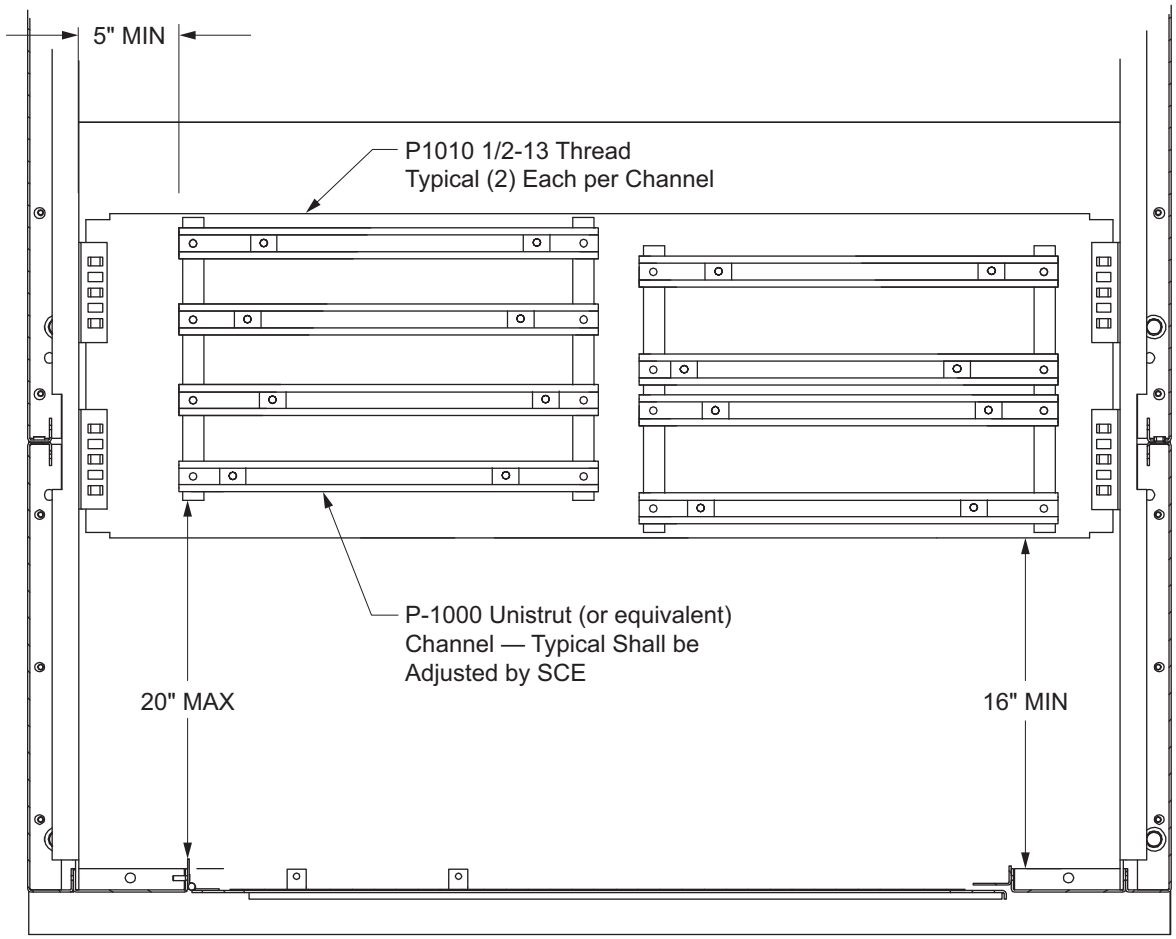

FRONT

Top Sectional View

Figure 7–19: 38 kV Class, 3-Phase, 3-Wire, Current Transformer and Metering Compartments

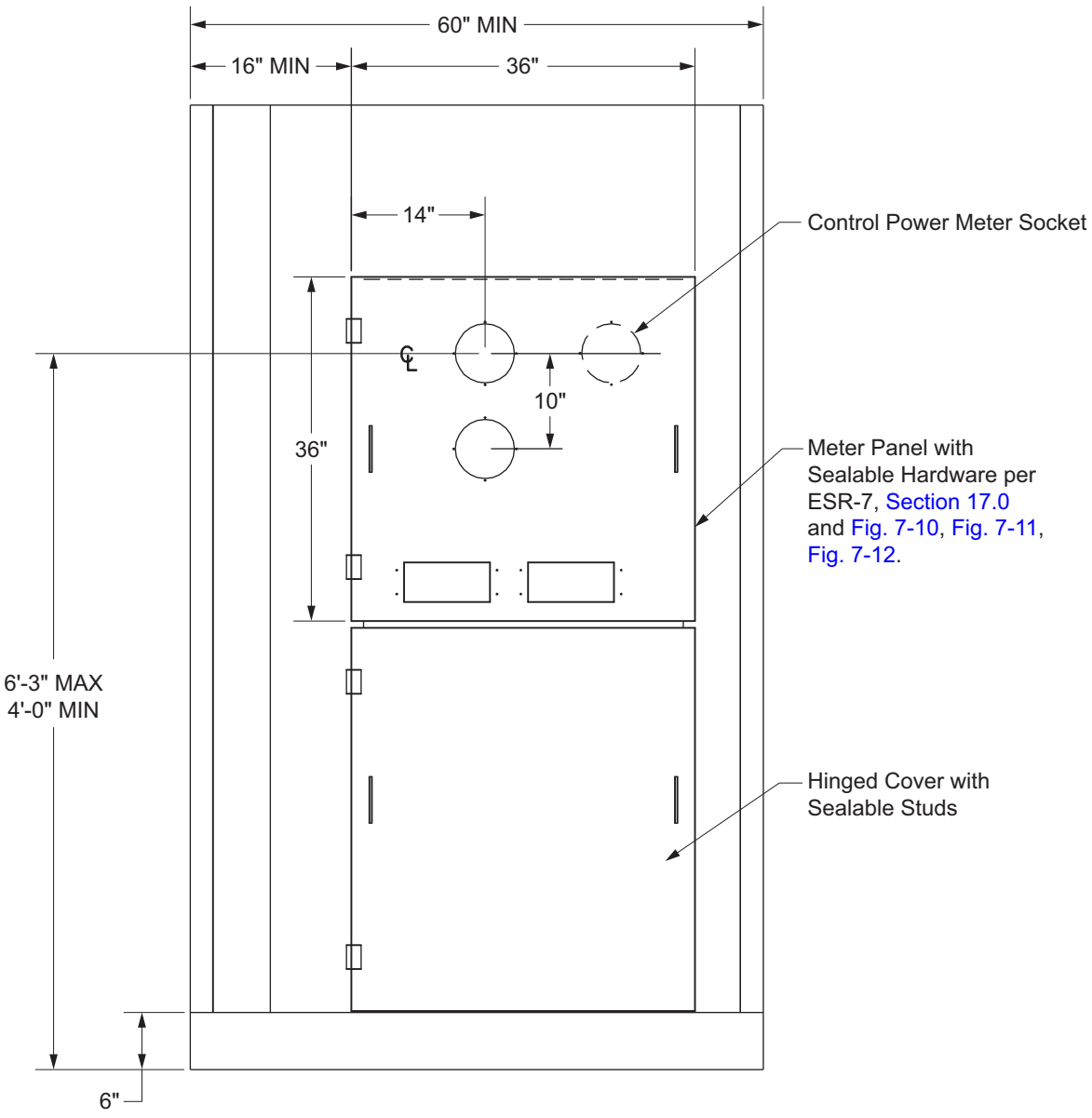

Figure 7–19.1: Front Interior View

Figure 7–19: 38 kV Class, 3-Phase, 3-Wire, Current Transformer and Metering Compartments *(Continued)*

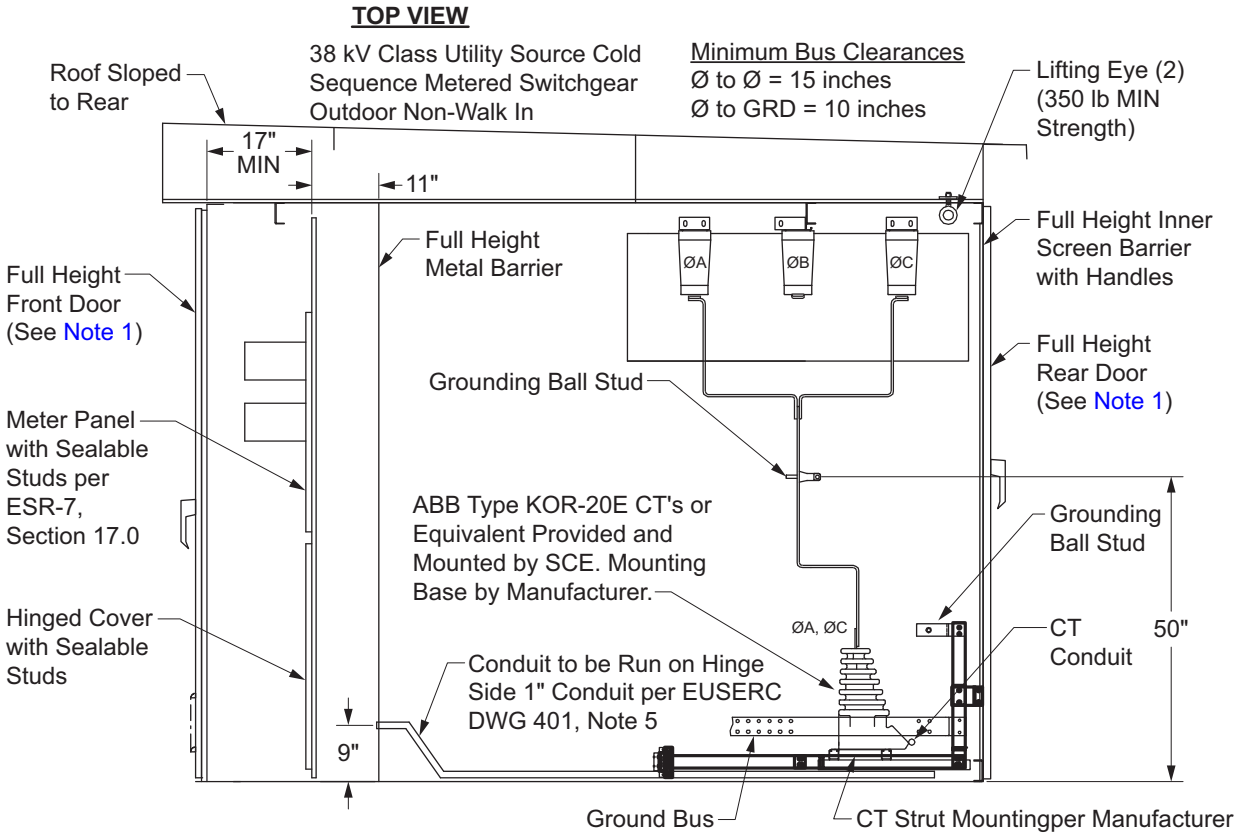

Figure 7–19.2: Right Side Sectional View

Note(s):

1. Both front and rear doors are full height with 3 point latch per ESR–7, Section 12.0 and padlockable with sealable studs per ESR–7, Section 17.0 with 90 degree door stop per ESR–7, Section 13.0 ground braids per ESR–7, Section 9.0.

Figure 7–19: 38 kV Class, 3-Phase, 3-Wire, Current Transformer and Metering Compartments *(Continued)*

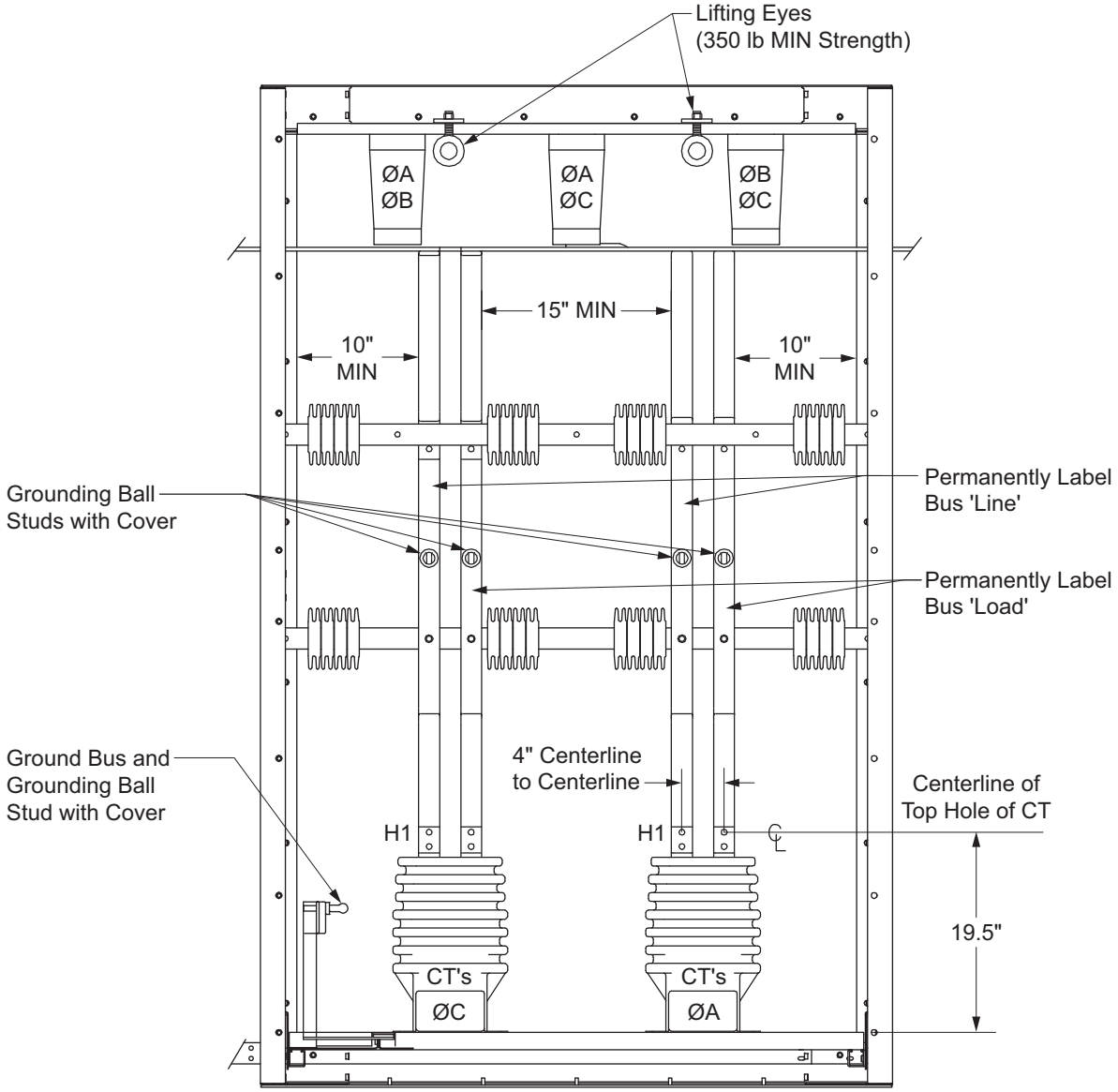

Figure 7–19.3: Rear Interior View

This page intentionally left blank.

ESR–8: Glossary

1.0 Overview

This section is a compilation of the terms (with definitions) used within Transmission and Distribution (T&D).

2.0 Glossary

The purpose of this section is to define and clarify the meaning of certain words and phrases concerning the use and installation of metering and service equipment as required in this manual.[1/]

[1/] Where reference is made to any of the codes, standards, ordinances, or requirements, it shall refer to the latest revision/edition of same.

A	
Accessible	A location in which all of the service equipment is installed. This shall encompass the termination section(s), metering appurtenances, and all main disconnect devices. There shall be 24-hour access to this equipment as required by the Company.
Access Opening	The minimum opening of a pull or termination section or enclosure for utility work access. This opening is measured from the edge of flange-to-edge of flange; not from sidewall-to-sidewall.
Adequate Ventilation	Ventilation necessary to allow air flow by convection, sufficient to keep the temperature of all electrical equipment (bus bars, connections, switches, circuit breakers, and so on) within an enclosure at or below the manufacturer's rated temperature rise.
Agent	One who is authorized to act for another under a contract or relation of agency, either for the Company or the customer.
ANSI	American National Standards Institute
Approved	Acceptable and in conformance with the Company's rules, policies, and the governing codes, laws, and ordinances.
AWG	American Wire Gauge
B	
BIL	Basic (Impulse) Insulation Level
Building	A structure that normally stands alone and is used for supporting or sheltering any use or occupancy.
Bondable	Capable of the permanent joining of metallic parts to form an electrically conductive path that will ensure electrical continuity and the capacity to conduct safely any current likely to be imposed.
Breaker	Customer's circuit breaker.
Bus, Live	Bus bars that are normally energized.
Bus, Laminated	More than one bus bar per phase, connected in parallel.
Bus, Removable Link	Used in the current transformer compartment to link the line and load bus together.
Bus Stubs	The part of a bus bar reserved for the termination of conductors.
Busway	A busway is considered to be a grounded metal enclosure containing factory-mounted conductors, bare or insulated, that are usually copper or aluminum bars, rods, or tubes.
C	
CAL-OSHA	California Occupational Safety and Health Act
Captive Screws	Screws used to attach removable panel covers on switchboards or enclosures and designed to stay attached to the panel cover when the cover is removed.
Clearance	Approval of the electrical installation by the local inspection authority having jurisdiction.
Clearance, Barrel of Proximity	The clearance described by an imaginary barrel around a termination facility measured from the sides, top, bottom, front, and back of the termination surface to a grounded surface or other termination facility. Includes the studs or bolts when in place.
Clearance, Radial	The clearance required around a termination facility measured from the sides, top, and bottom of the termination surface area.
Cogeneration	A customer-owned generation facility that is intended to operate in parallel with the Company's distribution system for the purpose of selling excess power to the Company.
Commercial Developments	Enterprises engaged in trade or furnishing services such as shopping centers, sales enterprises, business offices, professional offices, educational complexes, governmental complexes, or multifamily residential occupancies served by one meter.
Company	Southern California Edison Company
Conductors, Load Side	See Conductors, Metered.

Conductors, Line Side	See Conductors, Unmetered.
Conductors, Metered	Conductors transmitting electrical energy that has been previously recorded by the Company's billing metering.
Conductors, Unmetered	Conductors transmitting electrical energy that has not been recorded by the Company's billing metering.
Connector, Pressure	A device that establishes a connection between one or more conductors and a terminal by means of mechanical pressure.
Current-Transformer Compartment	See Transformer Compartment.
Customer	Any person, persons, corporation, and so forth, or their designated representative, for whom the electrical service and meter installation is provided.
E	
Enclosure	Box-like structure designed to enclose and protect Company service conductors or equipment.
EUSERC	Electric Utility Service Equipment Requirements Committee
EUSE	Electric Utility Service Equipment
EUSER	Electric Utility Service Equipment Requirements
EUS	Electric Utility Service
EXO	Externally Operated — An EXO Installation is any assembled service-wiring installation that does not employ a manufactured switchboard.
F	
Filler Panel	The panel used on a switchboard, in conjunction with a meter panel, to affect a cover over an extra-wide instrument-transformer compartment.
Final Grade	The grade after paving or improvements have been completed.
First Floor	As defined for the purposes of this manual, "first floor" is the floor that is closest to the elevation of ground level and above ground level.
H	
Handles, Lifting	Handles attached to meter and service-equipment panels to aid in the panel removal/replacement, and open/close operation. They are to be designed to provide full-hand grasp, secure attachment, and ability to withstand the stress of a 75-pound load.
High-Rise, Multiple-Occupancy, Residential Building	A multiple-occupancy, residential building with seven floors or more above ground level. The Company may, at its option, establish more than one meter room location for groups of individual metering facilities.
Housekeeping Pad	A concrete slab used to elevate the service equipment above the ground level.
I	
IAEI	International Association of Electrical Inspectors
IEEE	Institute of Electrical and Electronic Engineers
Industrial Developments	Enterprises engaged in a process that creates a product or changes material into form or products.
Inspection Authority	These authorities include City, County, State, and Federal Agencies authorized to make electrical inspections; and appropriate sections of School, Port, Water, and Transit Districts, and other entities with legal jurisdiction over wiring on their premises. These agencies are responsible for making inspections of the customer's electrical wiring system and notifying the Company if such system meets all applicable codes/ordinances and is ready for service.

Instrument-Transformer Compartment	See Transformer Compartment.
Insulating Barrier	A barrier of non-conductive material within an enclosure, compartment, switchboard, and so forth, that effectively prevents electricity from accidentally contacting a neutral, ground, or phase-to-phase in an uncontrolled manner.
L	
Landing Lugs	See Lugs.
Line Wires	See Conductors, Unmetered.
Lugs	Used to terminate cable conductors on termination facilities.
Lug, Range-Taking	Lug designed to accept more than one size cable within a specified range.
Lug Landing	See Bus Stubs.
M	
Meter	The equipment required, including mounting facilities, instrument transformers, protective devices, and meters to measure the electric consumption and/or demand requirements of the customer.
Metered Circuits	Those conductors extending from the meter and other service equipment to the loads or outlets connected to such circuits. Metered circuits are not permitted to serve one premise from another.
Meter Closet	A small room enclosed with full-length door or doors that extend from ground level to the ceiling of the enclosure. A meter closet is not a walk-in type enclosure. Sufficient clearance and depth shall be provided to allow for proper clearance for the meter. All meter closets, regardless of voltage, phase, or residential or commercial application, must allow 11 inches minimum clearance measured from the face of the meter panel to the inside of the closet door. The maximum clearance shall be 12 inches.
Meter Height	Meter height is the distance measured from the center axis of the installed meter and the standing and working surface.
Meter Panel	Panel used exclusively for mounting meter sockets and associated equipment.
Meter Pedestal	Free-standing meter enclosure, typically used for residential or commercial applications. Installed by bolting to a concrete slab.
Meter Post	Free-standing meter enclosure, typically used for residential mobile home service and installed by burying in the earth.
Meter Room	A meter room is an illuminated room located inside a building provided by the customer and approved by the Company for the location of the metering and service equipment.
Meter Sequence	The sequential relation between the service switch and the Company's meter in a series arrangement. The term New Sequence means a meter-switch-fuse sequence. Old Sequence means a switch-fuse-meter sequence.
Meter Socket	Socket designed to receive socket-type meter and sealing/lock ring.
Meter Socket, Ringless	Socket designed to receive socket-type meter without provisions for a sealing ring.[a/]
Meter, Socket Type	Designed for use with self-contained or instrument-transformer type meters to be inserted into a compatible socket.
Meter Test Switch	See Test Switch.
Multiple Metering	Prefabricated service equipment consisting of a service termination section and two or more meter sockets.
N	
NEC	National Electrical Code (NFPA No. 70)
NECA	National Electrical Contractors Association
NEMA	National Electrical Manufacturers Association

NESC	National Electrical Safety Code
NFPA	National Fire Protection Association
NGO	Net Generation Output
Non-Tracking	Insulating material with dielectric characteristics sufficient to resist carbonizing or deterioration when subjected to rated voltage and design conditions.
O	
OSHA	Occupational Safety and Health Act
P	
Panel, Removable	All removable access panels shall be limited to - square feet. All panels shall be provided with a lifting handle. Those panels in excess of 16 inches shall be provided with two lifting handles.
PCC	See Point of Common Coupling
Perimeter Wall	A structure designed to restrict the uncontrolled transport of soil or other undesirable materials into the working areas around pad-mounted equipment, BURD enclosures, vaults and manholes. It differs from a retaining wall in that a perimeter wall is limited in height and does not resist any significant lateral soil/other pressures.
Point of Attachment	The point where the Company's service drop is attached to a building or structure.
Point of Common Coupling	Metering equipment that measures energy delivered through SCE's distribution system.
Point of Delivery	The point where the Company's facilities are connected to the premises wiring of the customer.
Premises Identification	Approved numbers or addresses to be placed for all new buildings or structures in such a position as to be plainly visible and legible from the street or road fronting the property.
Public Way	A street, road, alley, walkway, or similar dedicated thoroughfare.
Pull Box	An enclosure for joining conductors and the necessary facilities for pulling conductors into place. Included in this classification are concrete subway-type pull boxes, manholes, and wall-mounted pull boxes, all of which are used as terminating enclosures.
Pull Can	A wall-mounted enclosure used for pulling, routing, or connecting the Company's service conductors to the customer's service equipment.
Pull Section	A section generally attached to the customer's switchboard where the Company's service conductors are terminated.
R	
Raceway	An enclosed channel designed expressly for holding wires, cables, or bus bars. If designated for line conductors, it must be sealable. The intermixing of line and load conductors in the same raceway is not permitted.
Readily Accessible	Capable of being reached quickly and conveniently 24 hours a day for construction, operation, maintenance, inspection, testing, or reading, without requiring those seeking access to climb over or remove obstacles; or to obtain keys, special permission, or security clearances.
Recognized Testing Laboratory	An electrical component testing laboratory, nationally recognized: Examples: UL, ETL, CSA, and so forth.
Return Flange	A flange inside and around an opening. Typically used in or around pull boxes or pull-section openings. The flange and used for attachment of the cover.
S	
Safety Socket Box	Commercial-rated self-contained meter panels, usually provided with test bypass blocks.
SCE	Southern California Edison, An Edison International Company.

Sealable	Normally, the provision for the installation of the Company's sealing devices. Other devices such as padlocks may be specified as sealing apparatus.
Sealing Ring	Device used to hold socket-type meters in place with provisions for installing the Company's sealing device(s).
Sealing Stud Assembly	Combination of sealing stud and sealing wing nut.
Sealing Stud	A 1/4" × 20 (minimum) stud drilled with a 0.0635-inch drill. This stud is used for sealing purposes.
Sealing Wing Nut	A 1/4" × 20 (minimum) wing nut with one wing drilled with a 0.0635-inch drill. This wing nut is used for sealing purposes.
Service	One service drop or one service lateral to a building or structure.
Service Drop	The Company's overhead conductors extending from its pole line to the point of attachment on the building or structure.
Service Entrance Conductors — Overhead	The conductors extending from the service equipment to the point of connection to the Company's service-drop conductors.
Service Entrance Conductors — Underground	All conductors (including bus or cable) installed by the customer beyond and including the point of connection to the Company's service-lateral conductors.
Service Lateral	The underground service conductors installed by the Company from a designated source to the point of connection with the customer's service-entrance conductors.
Service Point	The point of connection between the facilities of the Company and the customer's premises wiring.
Shall, Should, Will, and May	Throughout this manual the words Shall and Will are used to indicate mandatory requirements of the Company or local inspection authority. The terms Should and May are used to indicate recommendations, or that which is advised but not necessarily required.
Stub, Service Termination	See Terminal.
Stud	A threaded machine-type bolt or screw used for attachment of wire or cable connectors.
Stud, Secured in Place	A stud attached so that it will not turn, backout, or loosen in any manner when tightening or loosening terminal nuts, including cross-thread situations.
Switchboard Service Section	That part of the switchboard provided specifically for the termination of the Company's service conductors and instrument transformers, when required. The revenue meters, test facilities, and service switch or breaker may also be located in this area. The instrument-transformer compartment of this section shall be isolated from the customer's switch or breakers. That part reserved for the Company's use shall be sealable.
Switchboard, Specially Engineered	A switchboard design that does not conform to the standard switchboard design and includes one or more of the following: (1) service is rated over 3,000 A or 600 V; (2) where the service breaker ampacity rating exceeds that of the standard service section; (3) where multiple-metering sections are used; (4) where recessed meter panels are used.
Switchboard, Standard	An electrical switchboard of minimum dimensions of height, width, and depth with hinged meter panels and standard size instrument-transformer compartment, when required.
T	
Terminal	A conducting element of an equipment or circuit intended for connection to an external conductor.
Terminating Enclosure	A Company-approved type of enclosure installed at the point-of-service delivery for the load-end termination of the Company's service cables in which they join the customer's service-entrance conductors. Included in this classification are concrete subway-type pull boxes, manholes, wall-mounted pull boxes, and switchboard pull sections.
Terminating Facilities	Bolt-type pads, bus-stubs, or range-taking lugs provided by the customer for the sole purpose of attaching the Company's unmetered service conductors to the customer's service equipment.

Test Bypass Disconnect Facilities (Test Blocks)	An assembly used in conjunction with a self-contained meter socket. They are designed to allow the Company to de-energize the meter socket without disconnecting service to the customer.
Test Switch	An arrangement of small knife switches connected in the secondary instrument-transformer circuit between the instrument transformers and associated meters and metering devices. The test switch is used by the Company to isolate the metering from the instrument transformers. Also referred to as a meter test switch.
Test Perch	A bracket designed for the mounting of the Company's meter test switch.
Transformer Compartment	A designated area provided within a switchboard for the Company's exclusive use to install its instrument transformers.
Transformer, Instrument (IT)	A transformer that reproduces, in its secondary circuit, a definite and known proportion of the current or voltage of its primary circuit, with the phase relation substantially preserved.
Transformer, Current (CT)	An instrument transformer designed for use in the measurement of electrical current.
Transformer, Voltage (VT)	An instrument transformer designed for use in the measurement of voltage.
U	
UL®	Underwriters Laboratories Inc.[b/]
Utility Meters	Company furnished, installed, owned, and maintained meters used to measure electrical consumption for billing purposes.
Utility's Operating Convenience	This term refers to the utilization, under certain circumstances, of facilities or practices not ordinarily employed, that contribute to the overall efficiency of the Company's operation.
Underground Distribution System	An underground supply system employing underground structures, cables, and other equipment located in a designated area on public ways or utility easements and not including service cables in the customer's service conduit.
Underground Structure	Any conduit, subway-type pull box, manhole, vault, or other underground-type enclosure in which cables, transformers, and similar equipment are installed.
W	
Watt-Hour Meter, Instrument Transformer Rated	An electrical meter used in conjunction with instrument transformers to accurately measure and register all the electrical energy consumed in the circuit in which it is connected. The unit of measurement is the kilowatt hour.
Watt-Hour Meter, Self-contained	An electrical meter that measures and registers all the electrical energy consumed in the circuit in which it is connected and does not require additional instrument transformers. The unit of measurement is the kilowatt hour.
Working Space	The area provided and maintained by the customer, necessary for the Company to install, remove, or maintain its conductors or equipment. This space is required in front of all devices or equipment required in providing service to the customer.

a/ This type of socket is not acceptable in the SCE service territory.

b/ The use of the term UL® will be generic throughout this manual and will represent all recognized testing laboratories.

This page intentionally left blank.

TABLE OF CONTENTS

TABLES		PAGE
9–1	Reference List of SCE-Approved EUSERC Drawings	9–3

This page intentionally left blank.

Table 9–1: Reference List of SCE-Approved EUSERC Drawings

LEGEND

EUSERC = Electric Utility Service Equipment Requirements Committee
A = Acceptable; U = Unacceptable; C = Consult SCE; B = Intentionally Blank (Not Used); N/A = Not Applicable

EUSERC No.	EUSERC Drawing Acceptability	SCE Chapter and Figure No.
1. 301	A	ESR–3, Figure 3–6
2. 301A	U	
3. 302	U	
4. 302A	A	ESR–3, Figure 3–7
5. 302B	U	
6. 303	U	
7. 304	A	ESR–5, Figure 5–8
8. 305	A	ESR–5, Figure 5–9
9. 306	A	ESR–6, Figure 6–15
10. 307	C	ESR–3, Figure 3–24
11. 308	C	ESR–3, Figure 3–26
12. 309	U	
13. 310	B	
14. 311	A	ESR–5, Figure 5–10
15. 312	A	ESR–5, Figure 5–11
16. 313	C	ESR–5, Figure 5–13
17. 314	C	ESR–5, Figure 5–14
18. 315	C	ESR–3, Figure 3–10
19. 316	U	
20. 317	U	
21. 318	U	
22. 319	C	ESR–6, Figure 6–8
23. 320	C	ESR–6, Figure 6–9
24. 321	U	
25. 322	C	ESR–6, Figure 6–10
26. 323	U	
27. 324	C	ESR–6, Figure 6–13
28. 325	A	ESR–6, Figure 6–1
29. 326	A	ESR–6, Figure 6–2
30. 327	C	ESR–6, Figure 6–3
31. 328A	C	ESR–5, Figure 5–16
32. 328B	U	
33. 329A	C	ESR–5, Figure 5–15
34. 329B	U	
35. 330	A	ESR–6, Figure 6–11
36. 331	A	ESR–6, Figure 6–14
37. 332	A	ESR–6, Figure 6–12
38. 333	A	ESR–6, Figure 6–17
39. 334	B	
40. 335	B	
41. 336	U	
42. 337	B	
43. 338	U	
44. 339	U	ESR–5, Figure 5–12
45. 340	B	
46. 341	B	
47. 342	A	ESR–3, Figure 3–8
48. 343	C	ESR–3, Figure 3–9
49. 343A	U	
50. 344	C	ESR–3, Figure 3–11
51. 345	C	ESR–6, Figure 6–7
52. 346	B	
53. 347	A	ESR–6, Figure 6–6
54. 348	A	ESR–6, Figure 6–5
55. 349	A	ESR–2, Figure 2–17
56. 350	B	
57. 351	B	
58. 352	B	
59. 353	A	ESR–6, Figure 6–16
60. 354	A	ESR–6, Figure 6–4
61. 401	C	ESR–7, Figure 7–1
62. 402	B	—
63. 403	B	
64. 404	U	
65. 405	B	
66. 406	B	
67. 407	A	ESR–7, Figure 7–3
68. 408	U	—
69. 409	U	
70. 410	B	—
71. 411	C	—
72. 412	B	—

This page intentionally left blank.

TABLE OF CONTENTS

APPENDIX	PAGE
	9–5

This page intentionally left blank.

Appendix 9–1: Customer-Owned Transformer Vault Room (COTVR) Reference

Responsibilities of Customer

Below is a reference of some of the Information that the customer will need to provide, along with other requirements. For complete standard requirements, refer to ESR-4:

1. When Customer-Owned Transformer Vault Room (COTVRs) are designed or constructed without consideration to SCE requirements and or SCE was not contacted in advance, the Applicant / Customer shall be responsible for all modifications and their associated cost of complying with SCE requirements.
2. Pre-construction meeting required with SCE Inspector prior to start of construction.
3. COTVR drawings must meet SCE requirements.
4. Drawings are based on switchgear pull section ratings, which dictates number of conduits and the concrete structure sizes (e.g. slab box, etc.). The number of conduits correlates with the underground structure size. Loading dictates cable and transformation.
5. For safety purposes and for protection cables cannot be on the floor. Cable trench dimensions are 24" width x 30" height. Secondary Cable trench is required. Primary & secondary need their separate cable trenches. Incoming primary conduit to comply with ESR-4.
6. Provide type of mechanical hoist system, with dimensions and the manufacturers specifications, on COTVR drawing. Hoist system selected will affect the height of the room.
7. Provide grounding system in slab on grade. Install two ground rods at each location with 4/0 copper wire. There will be two locations with 2 ground rods at each location. Install 1/2" grounding inserts in each corner.
8. Grounding installation must have the SCE Inspector onsite during construction.
9. Provide a sump to contain any oil leaks from equipment.
10. Customer is responsible for water intrusion drainage into the COTVR.
11. Detail drawings to show equipment with clear pathway from entry way and method of installation and removal of equipment (e.g. hoist system, crane, etc.). SCE will not de-energize, relocate, or go above other equipment to install or replace equipment.
12. Type of flooring must be poured in place reinforced concrete. Customer to provide California licensed Structural Engineer stamped drawings.
13. Elevation of the COTVR to be at grade level or one level below grade. Must be accessible to SCE truck access at all times, with a height minimum of 16 feet and minimum 12 feet wide. Drivable access must be H-20 construction.
14. The COTVR shall be large enough to accommodate 100% of all required equipment and including required clearances.
15. Room height shall be minimum 12 feet from floor to bottom of retracted hoist hook. Depending on equipment and required clearances the room height may increase.
16. Space below the COTVR is considered an extension of the room that must be protected from vehicular traffic (e.g. permanently installed bollards).

17. The Applicant shall provide the location of the required personnel door and the additional equipment doors on the drawings. Equipment door opening shall accommodate two 4' wide x 10' height doors. Doors shall maintain a 3-hour fire rating. All doors must swing outwardly and be equipped with panic bar hardware. Roll-up doors are not allowed. Installation of door sill requires rubber gasket and must be removable. The equipment door(s) will require a heavy hasp. SCE will supply the padlock.
18. A minimum of two sets of 24"x24" openings for placement of ventilation louvers (one for intake and one for exhaust) is required. If the customer's Mechanical Engineer requires a larger area than the 24"x24" ventilation louvers, multiple 24"x24" louvers shall be used. No custom design ventilation systems are allowed. All mechanical drawings shall include a California licensed Mechanical Engineer's stamp and signature. Vents require 120V outlet within 2 feet of the vents with a GFCI outlet at each louver. Vent locations shall be provided on the drawing. Ventilation shall exhaust to the outside of the COTVR. Height of Vents shall be located 10 feet from floor to the bottom of the vent. Ventilation system shall not affect pedestrians or the public. The Customer's mechanical engineer shall determine the ventilation flow requirements. The customer shall provide the fire damper louvers and the screen. The blowers are provided and installed by SCE.
19. Capacitors, BURD transformers and BART Pads are not allowed in new construction. When Engineering determines that a Capacitor(s) is required, customer is responsible for providing a location for the Pad (UG) or Pole/Bank (OH).
20. Show location of the Bus Head with the height of 5 feet minimum & 6 feet maximum, to the bottom hole of the terminator. Must maintain all working clearances.
21. Drawings shall be to scale and include a detail plan view, showing floor, ceiling, and walls. Customer to provide a 3-hour fire-rated concrete reinforced structure, including room walls, floor, and ceiling. Cover all exposed structural steel with 3-hour fire-rated flameproof material. Concrete Masonry Unit (CMU) walls are not allowable for the construction of the COTVR.
22. One-inch coil inserts to be installed in the ceilings and walls. Drawings to show location of inserts. Coordinate with SCE Inspector and or SCE Planner for direction. Pulling irons are not allowed.
23. Weight capacity of COTVR is to be determined by your California licensed Structural Engineer. Include in calcs the total weight of SCE equipment plus 2000lbs.
24. All structural drawings to include a California licensed Structural Engineers stamp and signature.
25. All mechanical drawings to include a California licensed Mechanical Engineer's stamp and signature.
26. Fire sprinklers, fire equipment, and fire suppression are not allowed inside the COTVR.
27. Transformers up to 500kVA shall have a hatch opening of 8 feet x 8 feet minimum. Anything above 500kVA shall be 8 feet x 10 feet. The customer is to provide a detailed plan/exhibit that is stamped by a California Licensed Structural Engineer.
28. Double personnel doors are required for all Hatch type COTVRs in addition to the equipment Hatch opening.
29. SCE Planning shall assign a dedicated structure number to the COTVR itself in addition to any SCE structures/equipment housed within the COTVR for mapping and Geomatics purposes.