U.S. DEPARTMENT OF AGRICULTURE
AGRICULTURAL RESEARCH SERVICE

SUGARCANE RESEARCH LABORATORY

A/E CONTRACT NO:12405B21D0003
A/E ORDER NO:1232SA25F0560

501 BULL RUN ROAD
SCHRIVER (HOUMA) LA 70395

BID DESCRIPTION

THE PROJECT CONTAINS A BASE BID AND ONE CONSTRUCTION BID OPTION AS DESCRIBED BELOW:

BASE BID:

THE BASE BID INCLUDES ALL THE WORK LESS BID OPTION #1 AND INCLUDES CONSTRUCTION OF A 22,500 SQUARE FOOT LAB/OFFICE BUILDING. MINOR DEMOLITION AT THE EXISTING HEAD-HOUSE STRUCTURES IS REQUIRED. THE NEW FACILITY HAS A PILE SUPPORTED CONCRETE FOUNDATION WITH STEEL FRAME STRUCTURE AND METAL STUD INFILL FOR EXTERIOR AND INTERIOR FRAMING. THE EXTERIOR WALLS CONTAIN BRICK VENEER AND INSULATED WALL PANELS. ALL WALL AREAS CONTAIN FIBERGLASS AND/OR ROCK WOOL INSULATION. INTERIOR STUDS ARE FINISHED WITH PAINTED GYPSUM BOARD WITH SOME AREAS CONTAINING A CERAMIC TILE FINISH. THE ROOF IS COMBINATION OF A STANDING SEAM METAL SYSTEM OVER A STRUCTURAL METAL DECK WITH CLOSED CELL SPRAY FOAM INSULATION APPLIED TO THE STRUCTURAL DECK AND A LOW-SLOPE TPO ROOF SYSTEM AT A SECOND FLOOR MECHANICAL EQUIPMENT AREA. EXTERIOR DOORS ARE THERMALLY BROKE INSULATED HOLLOW METAL OR ALUMINUM. WINDOWS ARE THERMALLY BROKE ALUMINUM. THE FACILITY CONTAINS STANDARD AND LABORATORY CASEWORK WITH SOLID SURFACE AND EPOXY COUNTER TOPS. FLOOR FINISHES ARE EXPOSED SEALED CONCRETE, VINYL TILE, CARPET, AND CERAMIC TILE. CEILINGS ARE SUSPENDED ACOUSTICAL TILE AND GYPSUM BOARD SYSTEMS. EXTERIOR SITE IMPROVEMENTS CONTAIN ASPHALT PARKING AND DRIVES, CONCRETE SIDEWALKS, A FLAG POLE, AND SITE DRAINAGE INCLUDING A DRAINAGE SWELL LOCATED BETWEEN THE EXISTING HEAD HOUSE AND THE NEW LAB/OFFICE STRUCTURE.

BID OPTION #1:

BID OPTION #1 CONTAINS THE CONSTRUCTION OF A PILE SUPPORTED METAL CANOPY STRUCTURE BETWEEN THE EXISTING HEAD-HOUSE STRUCTURE AND THE NEW LAB/OFFICE STRUCTURE.

VICINITY MAP

NO SCALE

LOCATION MAP

NO SCALE

NOTICE TO CONTRACTOR

EXISTING BUILDINGS MUST REMAIN FULLY OPERATIONAL THROUGHOUT CONSTRUCTION. ALL CONTRACTOR ACCESS TO EXISTING BUILDINGS AND UTILITY OUTAGES FOR EXISTING BUILDINGS MUST BE COORDINATED WITH THE DESIGNATED LOCATION MONITOR FOR ARS.

REGISTERED ARCHITECT
Robin Earl Henry
2515
Greenwood, MS
STATE OF MISSISSIPPI

NO.	DATE	BY	DESCRIPTION

REVISIONS

A-E FIRM	USDA
PROJECT MANAGER REH	EPM WN
DESIGNER JLF	PPM XXX
CHECKED BY DRL	SAFETY & HEALTH CM
JOB # 5825	REAL PROPERTY JS

USDA Agricultural Research Service

USDA AGRICULTURAL RESEARCH SERVICE
SUGARCANE RESEARCH LABORATORY
HOUMA, LOUISIANA

COVER SHEET

PROJECT NO. XXX
DATE 05/20/2026

AGRICULTURAL RESEARCH SERVICE
FACILITIES ENGINEERING BRANCH
5106 SUNNYSIDE AVENUE
BELTSVILLE, MD 20705-5100

SHEET G-100
1 OF 176

J:\greenwood\2025 Jobs\5825 USDA Sugarcane Research Lab Houma LA\07 Working Folder\Arch\G100.dwg
May 20, 2026 - 8:13am

INDEX OF DRAWINGS

SHEET NO.	DRAWING NO.			TITLE
GENERAL				
G-100	1	OF	176	COVER SHEET
G-101	2	OF	176	DRAWING INDEX
CIVIL				
C-001	3	OF	176	CIVIL NOTES & ABBREVIATIONS
C-100	4	OF	176	EXISTING CONDITIONS / DEMO. / ACCESS PLAN
C-101	5	OF	176	SITE PLAN
C-102	6	OF	176	GRADING PLAN
C-300	7	OF	176	TYPICAL SITE DETAILS
C-301	8	OF	176	TYPICAL DETAILS
C-400	9	OF	176	EROSION CONTROL DETAILS
C-500	10	OF	176	BORING LOGS
C-501	11	OF	176	BORING LOGS
STRUCTURAL				
S-001	12	OF	176	STRUCTURAL GENERAL NOTES
S-002	13	OF	176	TYPICAL CONCRETE DETAILS
S-003	14	OF	176	TYPICAL FRAMING DETAILS
S-004	15	OF	176	WIND LOAD DIAGRAM
S-005	16	OF	176	TYPICAL METAL DECK DETAILS
SD101	17	OF	176	STRUCTURAL DEMOLITION PLAN
S-101	18	OF	176	FOUNDATION AND SLAB PLAN LAB/OFFICE
S-102	19	OF	176	STRUCTURAL EQUIPMENT PAD PLAN
S-201	20	OF	176	SECOND FLOOR AND LOW ROOF FRAMING PLAN LAB/OFFICE
S-202	21	OF	176	HIGH ROOF FRAMING PLAN LAB/OFFICE
S-203	22	OF	176	MECHANICAL PLATFORM FRAMING
S-301	23	OF	176	FRAMING ELEVATIONS LAB/OFFICE
S-302	24	OF	176	FRAMING ELEVATIONS LAB/OFFICE AND HEADHOUSE
S-303	25	OF	176	FRAMING ELEVATIONS LAB/OFFICE AND HEADHOUSE
S-304	26	OF	176	FRAMING ELEVATIONS LAB/OFFICE
S-401	27	OF	176	FOUNDATION SECTIONS AND DETAILS
S-402	28	OF	176	FOUNDATION SECTIONS AND DETAILS
S-403	29	OF	176	FOUNDATION SECTIONS AND DETAILS
S-501	30	OF	176	STEEL FRAMING SECTIONS AND DETAILS
S-502	31	OF	176	STEEL FRAMING SECTIONS AND DETAILS
S-503	32	OF	176	STEEL FRAMING SECTIONS AND DETAILS
S-504	33	OF	176	STEEL FRAMING SECTIONS AND DETAILS
ARCHITECTURAL				
AD-101	34	OF	176	EXISTING HEADHOUSE NORTH ELEVATION: DEMOLITION
A-001	35	OF	176	ARCHITECTURAL GRAPHICS AND ABBREVIATIONS
A-002	36	OF	176	FIRST FLOOR LIFE SAFETY PLAN LAB/OFFICE
A-003	37	OF	176	SECOND FLOOR LIFE SAFETY PLAN LAB/OFFICE
A-101	38	OF	176	FIRST FLOOR DIMENSION PLAN
A-101.1	39	OF	176	FIRST FLOOR PLAN PARTITION TYPES
A-101.2	40	OF	176	FIRST FLOOR PLAN DETAIL REFERENCE
A-101.3	41	OF	176	FIRST FLOOR PLAN SIGNAGE / CORNER GUARDS
A-102	42	OF	176	SECOND FLOOR PLAN
A-103	43	OF	176	FIRST FLOOR REFLECTED CEILING PLAN
A-104	44	OF	176	SECOND FLOOR REFLECTED CEILING PLAN
A-105	45	OF	176	ROOF PLAN
A-201	46	OF	176	EXTERIOR ELEVATIONS
A-202	47	OF	176	EXTERIOR ELEVATIONS
A-301	48	OF	176	BUILDING SECTIONS
A-302	49	OF	176	BUILDING SECTIONS
A-401	50	OF	176	PARTITION TYPES AND DETAILS
A-402	51	OF	176	WALL SECTIONS
A-403	52	OF	176	WALL SECTIONS
A-404	53	OF	176	WALL SECTIONS
A-405	54	OF	176	WALL SECTIONS
A-406	55	OF	176	WALL SECTIONS
A-501	56	OF	176	PLAN DETAILS
A-502	57	OF	176	PLAN DETAILS
A-503	58	OF	176	ROOF DETAILS
A-504	59	OF	176	ROOF DETAILS
A-505	60	OF	176	ROOF DETAILS
A-506	61	OF	176	ROOF DETAILS
A-507	62	OF	176	ROOF DETAILS
A-508	63	OF	176	ROOF DETAILS
A-509	64	OF	176	BRIDGE DETAILS
A-510	65	OF	176	BRIDGE DETAILS
A-511	66	OF	176	BRIDGE DETAILS
A-601	67	OF	176	ENLARGED PLANS AND INTERIOR ELEVATIONS
A-602	68	OF	176	ENLARGED PLANS AND INTERIOR ELEVATIONS
A-603	69	OF	176	ENLARGED PLANS AND INTERIOR ELEVATIONS
A-604	70	OF	176	STAIR PLANS, SECTION AND DETAILS
A-701	71	OF	176	FINISH SELECTIONS AND FINISH SCHEDULE
A-702	72	OF	176	FIRST FLOOR - FLOOR FINISH PLAN
A-703	73	OF	176	FIRST FLOOR FURNITURE PLAN
A-801	74	OF	176	DOOR SCHEDULE
A-802	75	OF	176	WINDOW AND LOUVER TYPES
A-803	76	OF	176	DOOR DETAILS
A-804	77	OF	176	DOOR DETAILS
A-805	78	OF	176	EXTERIOR WINDOW DETAILS
A-806	79	OF	176	EXTERIOR WINDOW DETAILS
A-807	80	OF	176	EXTERIOR WINDOW AND LOUVER DETAILS
A-808	81	OF	176	INTERIOR WINDOW DETAILS
CA-101	82	OF	176	BID OPTION #1 FIRST AND SECOND FLOOR PLANS
CA-102	83	OF	176	BID OPTION #1 FIRST AND SECOND REFLECTED CEILING PLANS
CA-103	84	OF	176	BID OPTION #1 ROOF PLAN
CA-201	85	OF	176	BID OPTION #1 EXTERIOR ELEVATIONS
CA-301	86	OF	176	BID OPTION #1 BUILDING SECTIONS
CA-401	87	OF	176	BID OPTION #1 WALL SECTIONS
CA-501	88	OF	176	BID OPTION #1 ROOF DETAILS
CA-502	89	OF	176	BID OPTION #1 ROOF DETAILS

INDEX OF DRAWINGS CONT.

SHEET NO.	DRAWING NO.			TITLE
FIRE PROTECTION				
FA-001	90	OF	176	FIRE ALARM NOTES AND LEGEND LAB/OFFICE
FA-101	91	OF	176	FIRST FLOOR FIRE ALARM PLAN LAB/OFFICE
FA-102	92	OF	176	SECOND FLOOR FIRE ALARM PLAN LAB/OFFICE
FP-001	93	OF	176	FIRE PROTECTION SPRINKLER NOTES LAB/OFFICE
FP-101	94	OF	176	FIRST FLOOR SPRINKLER PLAN LAB/OFFICE
FP-102	95	OF	176	SECOND FLOOR SPRINKLER PLAN LAB/OFFICE
CSFP101	96	OF	176	BID OPTION #1 SPRINKLER DRY-PIPE LAB/OFFICE
PLUMBING				
P-001	97	OF	176	PLUMBING GENERAL NOTES, ABBREVIATIONS AND LEGEND
PD101	98	OF	176	FIRST FLOOR PLUMBING DEMOLITION PLAN
PD102	99	OF	176	SECOND FLOOR PLUMBING DEMOLITION PLAN
P-101	100	OF	176	FIRST FLOOR PLUMBING PLAN
P-102	101	OF	176	FIRST FLOOR DRAIN AND VENT PLAN
P-103	102	OF	176	SECOND FLOOR PLUMBING PLAN
P-104	103	OF	176	FIRST FLOOR LAB UTILITIES PLAN
P-105	104	OF	176	FIRST FLOOR PLUMBING PLAN
P-401	105	OF	176	ENLARGED PLUMBING PLAN
P-402	106	OF	176	ENLARGED DRAIN AND VENT PLAN
P-501	107	OF	176	PLUMBING DETAILS
P-502	108	OF	176	PLUMBING DETAILS
P-503	109	OF	176	PLUMBING DETAILS
P-601	110	OF	176	PLUMBING SCHEDULES
P-701	111	OF	176	PLUMBING DIAGRAMS
P-702	112	OF	176	SANITARY SEWER RISER DIAGRAM
P-703	113	OF	176	PLUMBING RISER DIAGRAM
P-704	114	OF	176	LAB UTILITIES RISER DIAGRAM
P-705	115	OF	176	LAB PURIFIED WATER RISER DIAGRAM
MECHANICAL				
M-001	116	OF	176	MECHANICAL GENERAL NOTES
M-002	117	OF	176	MECHANICAL ABBREVIATIONS AND LEGEND
MD101	118	OF	176	FIRST FLOOR MECHANICAL DEMOLITION PLAN
MD102	119	OF	176	SECOND FLOOR MECHANICAL DEMOLITION PLAN
MH101	120	OF	176	MECHANICAL HVAC OVERALL FIRST FLOOR PLAN
MH102	121	OF	176	MECHANICAL HVAC SECOND FLOOR PLAN
MH103	122	OF	176	MECHANICAL HVAC ROOF PLAN
MH201	123	OF	176	MECHANICAL HVAC ELEVATION
MH401	124	OF	176	MECHANICAL HVAC ENLARGED FIRST FLOOR PLAN
MH402	125	OF	176	MECHANICAL HVAC ENLARGED FIRST FLOOR PLAN
MH403	126	OF	176	MECHANICAL HVAC ENLARGED FIRST FLOOR PLAN
MH404	127	OF	176	MECHANICAL HVAC ENLARGED FIRST FLOOR PLAN
MP101	128	OF	176	FIRST FLOOR MECHANICAL PIPING PLAN
MP102	129	OF	176	SECOND FLOOR MECHANICAL PIPING PLAN
M-501	130	OF	176	MECHANICAL DETAILS
M-502	131	OF	176	MECHANICAL DETAILS
M-503	132	OF	176	MECHANICAL DETAILS
M-601	133	OF	176	HVAC SCHEDULES
M-602	134	OF	176	MECHANICAL SCHEDULES
M-603	135	OF	176	MECHANICAL SCHEDULES
M-700	136	OF	176	MECHANICAL CONTROLS
M-701	137	OF	176	HVAC CONTROLS DIAGRAMS
M-702	138	OF	176	HVAC CONTROLS
M-703	139	OF	176	HVAC CONTROLS
M-704	140	OF	176	HVAC CONTROLS
M-705	141	OF	176	HVAC CONTROLS
M-706	142	OF	176	EXISTING AHU-3 CONTROLS
M-707	143	OF	176	EXISTING HEADHOUSE EXHAUST FAN CONTROLS
M-708	144	OF	176	HVAC CONTROLS
M-709	145	OF	176	HVAC CONTROLS
M-710	146	OF	176	HVAC CONTROLS
M-711	147	OF	176	HVAC CONTROLS
M-801	148	OF	176	CHILLED WATER PIPING DIAGRAM
M-802	149	OF	176	HEATING WATER PIPING DIAGRAM
ELECTRICAL				
E-001	150	OF	176	ELECTRICAL LEGEND
ED-601	151	OF	176	EXISTING SINGLE LINE DIAGRAM
E-501	152	OF	176	ELECTRICAL DETAILS
E-502	153	OF	176	ELECTRICAL DETAILS
E-601	154	OF	176	SINGLE LINE DIAGRAM
E-602	155	OF	176	SINGLE LINE DIAGRAM (CONT.)
E-701	156	OF	176	PANEL SCHEDULES
E-702	157	OF	176	PANEL SCHEDULES
EL101	158	OF	176	FIRST FLOOR LIGHTING PLAN
EL102	159	OF	176	SECOND FLOOR LIGHTING PLAN
EL501	160	OF	176	LIGHTING SCHEDULE AND DETAILS
EL502	161	OF	176	LIGHTING DETAILS
EP101	162	OF	176	FIRST FLOOR POWER PLAN - WEST
EP102	163	OF	176	FIRST FLOOR POWER PLAN - EAST
EP201	164	OF	176	SECOND FLOOR POWER PLAN
EG101	165	OF	176	LIGHTNING PROTECTION PLAN
EG501	166	OF	176	LIGHTNING PROTECTION DETAILS
EM101	167	OF	176	FIRST FLOOR MECHANICAL CONNECTIONS PLAN
EM102	168	OF	176	SECOND FLOOR MECHANICAL CONNECTIONS PLAN
EM103	169	OF	176	ROOF MECHANICAL CONNECTIONS PLAN
EY101	170	OF	176	FIRST FLOOR SPECIAL SYSTEMS PLAN
EY102	171	OF	176	SECOND FLOOR SPECIAL SYSTEMS PLAN
ES101	172	OF	176	ELECTRICAL SITE PLAN
TELECOMMUNICATIONS				
TN101	173	OF	176	FIRST FLOOR TELECOMM PLAN
TN102	174	OF	176	SECOND FLOOR TELECOMM PLAN
TN501	175	OF	176	TELECOMMUNICATIONS DETAILS
TN601	176	OF	176	TELECOMMUNICATIONS RISER DIAGRAM

REGISTERED AGRICULTURAL ENGINEER
Robin Earl Henry, P.E.
2515
Greenwood, MS
STATE OF MISSISSIPPI

Johnson McAdams PLLC
ARCHITECTS/ENGINEERS PLANNING SURVEYING MANAGEMENT
P.O. BOX 519, GREENWOOD, MISSISSIPPI (662) 455-6643

NO.	DATE	BY	DESCRIPTION

REVISIONS

USDA Agricultural Research Service

USDA AGRICULTURAL RESEARCH SERVICE
SUGARCANE RESEARCH LABORATORY
HOUMA, LOUISIANA

DRAWING INDEX

A-E FIRM	USDA
PROJECT MANAGER	REH
DESIGNER	JLF
CHECKED BY	DRL
JOB #	5825
EPM	WN
PPM	XXX
SAFETY & HEALTH	CM
REAL PROPERTY	JS

PROJECT NO. XXX
DATE 05/20/2026

AGRICULTURAL RESEARCH SERVICE
FACILITIES ENGINEERING BRANCH
5106 SUNNYSIDE AVENUE
BELTSVILLE, MD 20705-5100

SHEET G-101
2 OF 176

C:\Users\MMONK~1\AppData\Local\Temp\AcPublish_28588\G101.dwg
May 20, 2026 - 8:53am

GENERAL NOTES

1 REVIEW PROJECT DOCUMENTS PRIOR TO START OF CONSTRUCTION. REPORT ANY DISCREPANCIES TO CONTRACTING OFFICER PRIOR TO PROCEEDING WITH WORK. DIMENSIONS RELATING TO EXISTING CONSTRUCTION ARE TO BE FIELD VERIFIED. THE CONTRACTOR MUST IMMEDIATELY COMMUNICATE, IN WRITING TO THE CONTRACTING OFFICER, CONCERNS WHERE THEY BELIEVE DESIGN DOCUMENTS ARE INSUFFICIENT, INADEQUATE OR INCORRECT FOR PERFORMING THE CONSTRUCTION WORK.

2 EXISTING UTILITIES ARE SHOWN IN THEIR APPROXIMATE LOCATIONS AS LOCATED AT THE TIME OF THE DESIGN SITE VISIT. THE CONTRACTOR MUST VERIFY THE LOCATION OF UTILITIES, NOTE EXISTING CONDITIONS AND NOTE ANY VARIANCES TO THE CONTRACTING OFFICER PRIOR TO BEGINNING CONSTRUCTION. (UNDERGROUND UTILITIES AND OBSTRUCTIONS WERE NOT IDENTIFIED DURING THE DESIGN OF THIS PROJECT. THE EXTENT OF UNDERGROUND UTILITIES IS UNKNOWN. IT IS THE CONTRACTOR'S RESPONSIBILITY TO PROTECT EXISTING CONSTRUCTION DURING EXCAVATION.)

3 WHERE WORK DAMAGES OR DISTURBS EXISTING CONDITIONS NOT INCLUDED IN THE WORK OF THIS PROJECT, THE CONTRACTOR MUST REPAIR THE DAMAGED SYSTEM TO A LEVEL THAT MEETS OR EXCEEDS ITS LEVEL OF PERFORMANCE AND APPEARANCE AT NO COST TO THE GOVERNMENT.

4 COORDINATE CIVIL WORKS AND OTHER TRADES.

5 DETAILS AND SECTIONS ON THE DRAWINGS ARE INTENDED TO BE TYPICAL AND MUST BE CONSTRUED TO APPLY TO ANY SIMILAR SITUATION ELSEWHERE ON THE PROJECT EXCEPT WHERE A SEPARATE DETAIL IS SHOWN.

6 VERIFY EXISTING CONDITIONS, WHEN SPECIFIC INFORMATION IS INCORRECT, MISSING OR IS IN CONFLICT, BRING THE CONFLICT TO THE ATTENTION OF THE CONTRACTING OFFICER PRIOR TO BEGINNING WORK RELATED TO THAT ITEM.

7 THE CONTRACTOR MUST PROVIDE LAYOUT SURVEYING AS NECESSARY TO LOCATE THE NEW WORK ITEMS PRIOR TO INITIATING DEMOLITION WORK. EROSION AND SEDIMENT CONTROL BEST MANAGEMENT PRACTICES (BMP'S) MUST BE IN PLACE AND APPROVED BY THE CONTRACTING OFFICER PRIOR TO INITIATING DEMOLITION WORK.

8 THE CONTRACTOR MUST TAKE CARE, BY THE USE OF GRADING, DIVERSION AND DEWATERING, TO PREVENT PONDING OF WATER ON SITE IN AREAS OF STRUCTURAL AND PAVEMENT SUBGRADES.

9 THE CONTRACTOR MUST PROVIDE AS-BUILT DRAWINGS OF THE NEW UTILITIES AND SERVICE.

10 THE CONTRACTOR MUST CONTROL THE SPREAD OF DUST AND IRRITANTS TO OTHER SPACES, ADJACENT BUILDINGS AND OUTSIDE OF DESIGNATED WORK AREAS.

11 TEMPORARILY SEED OR STABILIZE AREAS OF EXPOSED EARTH THAT ARE PLANNED TO BE UNFINISHED OR UNWORKED FOR A PERIOD EXCEEDING 14 DAYS.

12 ALL AREAS WITHIN THE LIMITS OF DISTURBANCE MUST BE GRADED TO DRAIN FREELY AWAY FROM NEW AND EXISTING BUILDINGS, EQUIPMENT, AND STRUCTURES NOT INTENDED FOR DRAINAGE. THE CONTRACTOR MUST REGRADE AREAS AS NECESSARY TO PREVENT PONDING.

13 ALL DISTURBED AREAS MUST BE SEEDED AND A TURF STAND ESTABLISHED PRIOR TO FINAL ACCEPTANCE OF WORK.

14 THE CONTRACTOR IS RESPONSIBLE FOR ACQUIRING ALL PERMITTING NECESSARY FOR CONSTRUCTION.

15 ITEMS LABELED AS "UNDER CONSTRUCTION" WITHIN THESE PLANS ARE NOT PART OF THE WORK PROPOSED IN THIS CONTRACT. ITEMS NOTED AS "UNDER CONSTRUCTION" ARE SHOWN AS PORTRAYED IN CONTRACT DOCUMENTS ENTITLED "SUGARCANE RESEARCH LAB GREENHOUSE DESIGN" DATED 09/17/24. AS-BUILT CONDITIONS MAY VARY FROM THOSE SHOWN HEREIN.

ABBREVIATIONS

APPROX. (±)	APPROXIMATELY
C.O.	CLEAN OUT
D	DIAMETER
DN	DOWN
DIA.	DIAMETER
DR	DRIVE
EL.	ELEVATION
EW.	EACH WAY
ETC.	ETCETERA
F.F.	FINISHED FLOOR
F.G.	FINISHED GRADE
GA	GAUGE
GV	GATE VALVE
INV.	INVERT
LA	LOUISIANA
MATL.	MATERIAL
MAX.	MAXIMUM
MNFCT.	MANUFACTURER
MH	MANHOLE
MIN.	MINIMUM
O.C.	ON CENTER
OD	OUTSIDE DIAMETER
PIV	POST INDICATOR VALVE
PVMT	PAVEMENT
REQD	REQUIRED
RD	ROAD
SD	STORM DRAIN
SS	SANITARY SEWER
SQ	SQUARE
TYP.	TYPICAL
W/	WITH
W/O	WITHOUT

GRAPHIC SCALE

0 20' 40' 60'

SCALE: 1"=20'-0"

NORTH

1 / C-100 SITE PLAN

SCALE: 1" = 20'

JAMES H. TOLLISON 10338 REGISTERED PROFESSIONAL ENGINEER STATE OF MISSISSIPPI

NO.	DATE	BY	DESCRIPTION

REVISIONS

Johnson, Mirmiran & Adams, P.A.
ARCHITECTS/ENGINEERS/ PLANNING / SURVEYING / MANAGEMENT
P.O. BOX 4-5, GREENWOOD, MISSISSIPPI - (662) 455-4443

USDA Agricultural Research Service

USDA AGRICULTURAL RESEARCH SERVICE
SUGARCANE RESEARCH LABORATORY
HOUMA, LOUISIANA

CIVIL NOTES & ABBREVIATIONS

A-E FIRM	USDA
PROJECT MANAGER	REH
EPM	WN
DESIGNER	JMD
PPM	XXX
CHECKED BY	DRL
SAFETY & HEALTH	CM
JOB #	5825
REAL PROPERTY	JS
PROJECT NO.	XXX
DATE	05/20/2026

AGRICULTURAL RESEARCH SERVICE
FACILITIES ENGINEERING BRANCH
5106 SUNNYSIDE AVENUE
BELTSVILLE, MD 20705-5100

SHEET C-001

3 OF 176

J:\Agreement\2025 Jobs\5825 USDA Sugarcane Research Lab Houma LA\07 Working Folder\Civil\C-001.dwg
May 05, 2026 - 2:07pm

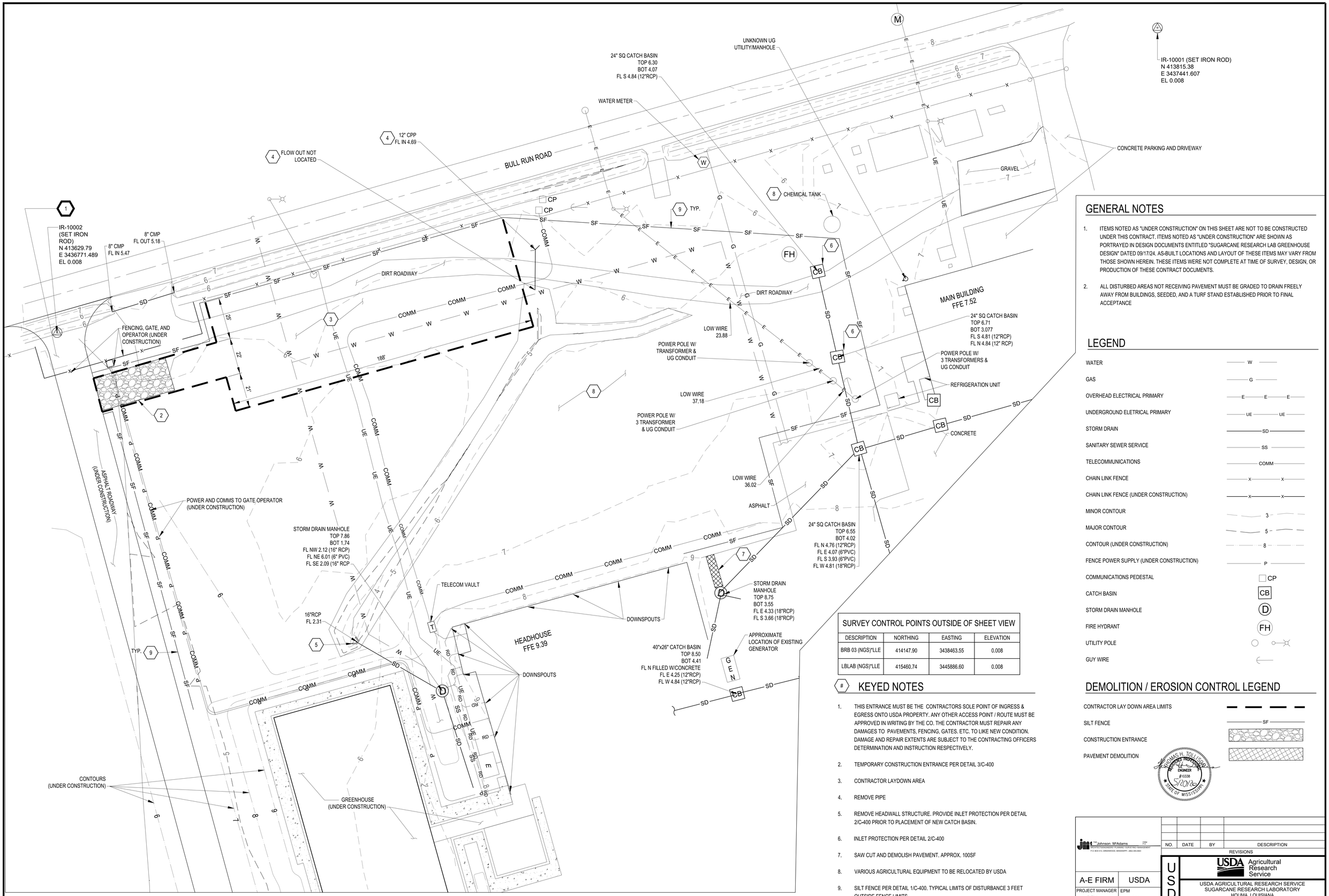

GENERAL NOTES

1. ITEMS NOTED AS "UNDER CONSTRUCTION" ON THIS SHEET ARE NOT TO BE CONSTRUCTED UNDER THIS CONTRACT. ITEMS NOTED AS "UNDER CONSTRUCTION" ARE SHOWN AS PORTRAYED IN DESIGN DOCUMENTS ENTITLED "SUGARCANE RESEARCH LAB GREENHOUSE DESIGN" DATED 09/17/24. AS-BUILT LOCATIONS AND LAYOUT OF THESE ITEMS MAY VARY FROM THOSE SHOWN HEREIN. THESE ITEMS WERE NOT COMPLETE AT TIME OF SURVEY, DESIGN, OR PRODUCTION OF THESE CONTRACT DOCUMENTS.
2. ALL DISTURBED AREAS NOT RECEIVING PAVEMENT MUST BE GRADED TO DRAIN FREELY AWAY FROM BUILDINGS, SEEDED, AND A TURF STAND ESTABLISHED PRIOR TO FINAL ACCEPTANCE

LEGEND

WATER	W
GAS	G
OVERHEAD ELECTRICAL PRIMARY	E E E
UNDERGROUND ELETRICAL PRIMARY	UE UE
STORM DRAIN	SD
SANITARY SEWER SERVICE	SS
TELECOMMUNICATIONS	COMM
CHAIN LINK FENCE	x x
CHAIN LINK FENCE (UNDER CONSTRUCTION)	x x
MINOR CONTOUR	3
MAJOR CONTOUR	5
CONTOUR (UNDER CONSTRUCTION)	8
FENCE POWER SUPPLY (UNDER CONSTRUCTION)	P
COMMUNICATIONS PEDESTAL	CP
CATCH BASIN	CB
STORM DRAIN MANHOLE	D
FIRE HYDRANT	FH
UTILITY POLE	
GUY WIRE	

SURVEY CONTROL POINTS OUTSIDE OF SHEET VIEW

DESCRIPTION	NORTHING	EASTING	ELEVATION
BRB 03 (NGS)*LLE	414147.90	3438463.55	0.008
LBLAB (NGS)*LLE	415460.74	3445886.60	0.008

KEYED NOTES

1. THIS ENTRANCE MUST BE THE CONTRACTORS SOLE POINT OF INGRESS & EGRESS ONTO USDA PROPERTY. ANY OTHER ACCESS POINT / ROUTE MUST BE APPROVED IN WRITING BY THE CO. THE CONTRACTOR MUST REPAIR ANY DAMAGES TO PAVEMENTS, FENCING, GATES. ETC. TO LIKE NEW CONDITION. DAMAGE AND REPAIR EXTENTS ARE SUBJECT TO THE CONTRACTING OFFICERS DETERMINATION AND INSTRUCTION RESPECTIVELY.
2. TEMPORARY CONSTRUCTION ENTRANCE PER DETAIL 3/C-400
3. CONTRACTOR LAYDOWN AREA
4. REMOVE PIPE
5. REMOVE HEADWALL STRUCTURE. PROVIDE INLET PROTECTION PER DETAIL 2/C-400 PRIOR TO PLACEMENT OF NEW CATCH BASIN.
6. INLET PROTECTION PER DETAIL 2/C-400
7. SAW CUT AND DEMOLISH PAVEMENT. APPROX. 100SF
8. VARIOUS AGRICULTURAL EQUIPMENT TO BE RELOCATED BY USDA
9. SILT FENCE PER DETAIL 1/C-400. TYPICAL LIMITS OF DISTURBANCE 3 FEET OUTSIDE FENCE LIMITS.

DEMOLITION / EROSION CONTROL LEGEND

CONTRACTOR LAY DOWN AREA LIMITS	
SILT FENCE	SF
CONSTRUCTION ENTRANCE	
PAVEMENT DEMOLITION	

NORTH

1 / C-100 EXISTING CONDITIONS / DEMO. / EROSION CONTROL PLAN
SCALE: 1" = 20'

0 20' 40' 60'
SCALE: 1"=20'-0"

Johnson, Mirmiran & Thompson, Inc.
ARCHITECTS/ENGINEERS/PLANNERS/ELECTRO-MANAGEMENT
P.O. BOX 513, GREENWOOD, MISSISSIPPI - (662) 455-6611

NO.	DATE	BY	DESCRIPTION

REVISIONS

USDA Agricultural Research Service

A-E FIRM	USDA
PROJECT MANAGER	REH
EPM	WN
DESIGNER	JLF
PPM	XXX
CHECKED BY	DRL
SAFETY & HEALTH	CM
JOB #	5825
REAL PROPERTY	JS

USDA AGRICULTURAL RESEARCH SERVICE
SUGARCANE RESEARCH LABORATORY
HOUMA, LOUISIANA

EXISTING CONDITIONS / DEMO. / ACCESS PLAN

PROJECT NO. XXX	AGRICULTURAL RESEARCH SERVICE FACILITIES ENGINEERING BRANCH 5106 SUNNYSIDE AVENUE BELTSVILLE, MD 20705-5100	SHEET C-100
DATE 05/20/2026		4 OF 176

STEVEN DOUGLAS H. TOLLISON — REGISTERED PROFESSIONAL ENGINEER — #10338 — STATE OF MISSISSIPPI

J:\greenwood\2025 Jobs\5825 USDA Sugarcane Research Lab Houma LA\07 Working Folder\Civil\C100.dwg
May 19, 2026 - 3:07pm

GENERAL NOTES

1. STAKEOUT COORDINATES (NORTHING/EASTING) ARE PROVIDED FOR GENERAL SITING. THE CONTRACTOR MUST USE ARCHITECTURAL DIMENSIONS FOR FINAL LAYOUT.
2. CONTRACTOR MUST COORDINATE LAYOUT WITH THE LOCATION OF THE CONNECTING BRIDGE BETWEEN THE EXISTING HEADHOUSE AND THE NEW LABORATORY STRUCTURE. A SECTION OF THE EXISTING HEADHOUSE NORTHERN WALL (APPROXIMATELY 73' FROM THE NORTHEAST CORNER ON THE SECOND FLOOR) WAS DESIGNED TO BE REMOVED TO ACCOMMODATE THE NEW LABORATORY STRUCTURE. FIELD LOCATE AND VERIFY PREPARED OPENING.
3. ALL UTILITY SERVICES, EXCEPT FOR THE LAB BUILDINGS SANITARY EFFLUENT, ARE PROVIDED / FED FROM THE EXISTING HEADHOUSE. SEE OTHER DISCIPLINE DRAWINGS FOR ROUTING
4. ITEMS NOTED AS "UNDER CONSTRUCTION" ON THIS SHEET ARE NOT TO BE CONSTRUCTED UNDER THIS CONTRACT. ITEMS NOTED AS "UNDER CONSTRUCTION" ARE SHOWN AS PORTRAYED IN DESIGN DOCUMENTS ENTITLED "SUGARCANE RESEARCH LAB GREENHOUSE DESIGN" DATED 09/17/24. AS-BUILT LOCATIONS AND LAYOUT OF THESE ITEMS MAY VARY FROM THOSE SHOWN HEREIN. THESE ITEMS WERE NOT COMPLETE AT TIME OF SURVEY, DESIGN, OR PRODUCTION OF THESE CONTRACT DOCUMENTS.

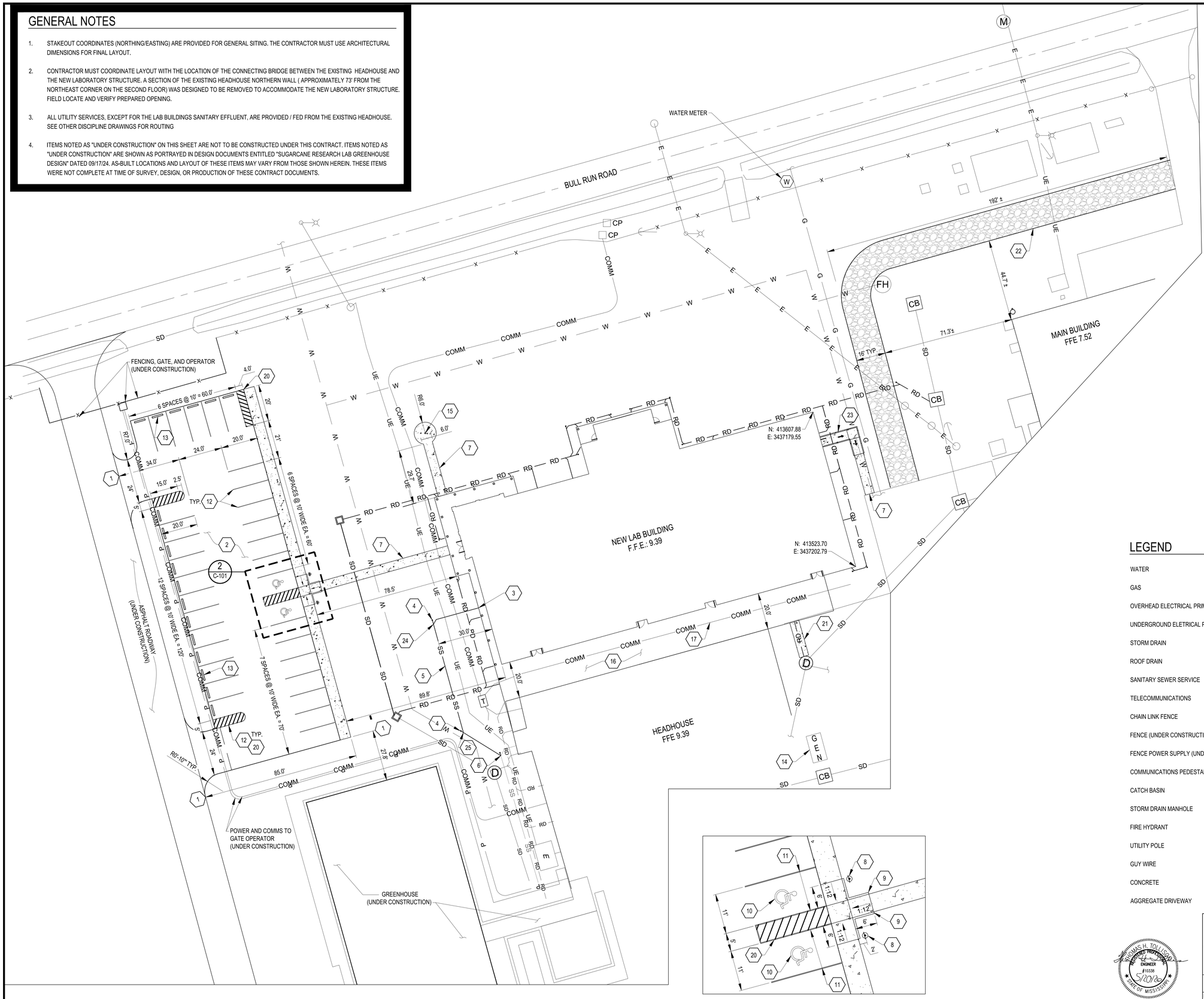

NORTH

1 C-101 SITE PLAN
SCALE: 1" = 20'

2 C-101 ENLARGED VIEW OF ACCESSIBLE PARKING RAMPS
SCALE: 1" = 10'

KEYED NOTES

1. DISTANCE MAY VARY DUE TO AS BUILT LOCATION OF PROPOSED FEATURES. FIELD VERIFY.
2. PROVIDE NEW ASPHALT PARKING AREA. PAVEMENT PER DETAIL 11/C-300
3. 6" SANITARY SEWER SERVICE TO NEW LAB BUILDING. APPROX INV. EL. @ ± 6.12. COORDINATE WITH PLUMBING.
4. PROVIDE CLEANOUT PER DETAIL 2/C-301.
5. 6" SANITARY SEWER SERVICE @ APPROX. 0.3%. SLOPE.
6. CONNECT NEW SANITARY SERVICE TO EXISTING 6" SANITARY SEWER SERVICE @ APPROX INV. EL. 5.76 (FIELD VERIFY). PROVIDE WYE AND NEW CLEAN OUT.
7. SITE SIDEWALK PER DETAIL 6/C-300
8. HANDICAP PARKING SIGNAGE PER DETAIL 3/C-300 (EACH HANDICAP ACCESSIBLE SPACE)
9. CURB PER DETAIL 1/C-300
10. HANDICAP PARKING SYMBOL PER DETAIL 4/C-300 (2 TOTAL). CENTER IN PARKING STALL.
11. BLUE PAVEMENT MARKINGS. 4" WIDE LINES TYP.
12. WHITE PAVEMENT MARKINGS. 4" WIDE LINES TYP.
13. CONCRETE WHEEL STOP PER DETAIL 10/C-300. (18 TOTAL)
14. SEE ELECTRICAL AND STRUCTURAL FOR WORK TO BE PROVIDED AT EXISTING GENERATOR
15. FLAGPOLE AND FOUNDATION PER DETAIL 9/C-300
16. CONCRETE BREEZEWAY WITH TRENCH DRAIN. SEE OTHER DISCIPLINES FOR DETAILS
17. EXISTING COMMUNICATIONS LINE. RELOCATE AS REQD TO FACILITATE NEW CONSTRUCTION.
18. REPAIR REMOVED PAVEMENT WITH CONCRETE PATCH PER 3/C-301
19. CONCRETE WALK PER DETAIL 2/C-300
20. CROSS HATCHING PER 5/C-300
21. PAVEMENT REPAIR PER DETAIL 8/C-300
22. FIRE HYDRANT ACCESS ROUTE. PROVIDE 8" OF COMPACTED AGGREGATE BASE MATERIAL OVER 12" OF COMPACTED SOIL. UNDERLAY AGGREGATE WITH GEOTEXTILE FABRIC.
23. HANDICAP ACCESSIBLE RAMP PER DETAILS 1&4/C-301. MAX SLOPE 1:12.
24. PROVIDE 6"X6"X4" WYE
25. PROVIDE 6"X6"X6" WYE

LEGEND

	EXISTING	NEW
WATER	W	
GAS	G	
OVERHEAD ELECTRICAL PRIMARY	E E	
UNDERGROUND ELETRICAL PRIMARY	UE	
STORM DRAIN	SD	SD
ROOF DRAIN	RD RD	RD RD
SANITARY SEWER SERVICE	SS	SS
TELECOMMUNICATIONS	COMM	
CHAIN LINK FENCE	X	
FENCE (UNDER CONSTRUCTION)	X	
FENCE POWER SUPPLY (UNDER CONSTRUCTION)	P	
COMMUNICATIONS PEDESTAL	CP	
CATCH BASIN	CB	
STORM DRAIN MANHOLE	D	
FIRE HYDRANT	FH	
UTILITY POLE		
GUY WIRE		
CONCRETE		
AGGREGATE DRIVEWAY		

0 10' 20' 30'
SCALE: 1"=10'-0"
0 20' 40' 60'
SCALE: 1"=20'-0"

NO.	DATE	BY	DESCRIPTION

REVISIONS

THOMAS H. TOLLISON — REGISTERED PROFESSIONAL ENGINEER #10338 — STATE OF MISSISSIPPI

Johnson M'Adams, PA — ENGINEERS/ARCHITECTS/PLANNERS/SURVEYORS — P.O. BOX 511, GREENWOOD, MISSISSIPPI — (662) 455-4943

USDA Agricultural Research Service

USDA AGRICULTURAL RESEARCH SERVICE
SUGARCANE RESEARCH LABORATORY
HOUMA, LOUISIANA

SITE PLAN

A-E FIRM	USDA
PROJECT MANAGER	EPM
REH	WN
DESIGNER	PPM
JMD	XXX
CHECKED BY	SAFETY & HEALTH
DRL	CM
JOB #	REAL PROPERTY
5825	JS

PROJECT NO. XXX
DATE 05/20/2026

AGRICULTURAL RESEARCH SERVICE
FACILITIES ENGINEERING BRANCH
5106 SUNNYSIDE AVENUE
BELTSVILLE, MD 20705-5100

SHEET C-101
5 OF 176

J:\greenwood\2025_Jobs\5825 USDA Sugarcane Research Lab Houma LA\07 Working Folder\Civil\C101.dwg
May 19, 2026 - 3:07pm

SPOT ELEVATIONS

ID	DESCRIPTION	ELEVATION
A	EDGE OF LANDING @ ASPHALT	7.5
B	LANDING CORNER	7.6
C	TOP OF RAMP	8.0
D	SIDEWALK CORNER	8.9
E	EDGE OF SLAB	8.8
F	EDGE OF SLAB	8.7
G	ASPAHLT CORNER	7.5
H	SIDEWALK CORNER	8.0
J	LANDING CORNER	9.37
K	LANDING CORNER	9.27
L	LANDING CORNER	8.52
M	RAMP END / BEGINNING OF SDWLK	7.77
N	ROOF DRAIN INVERT	7.25
O	ROOF DRAIN INVERT @ TEE	6.79
P	ROOF DRAIN OUTFALL INVERT	3.50
Q	LANDING CORNER	8.50

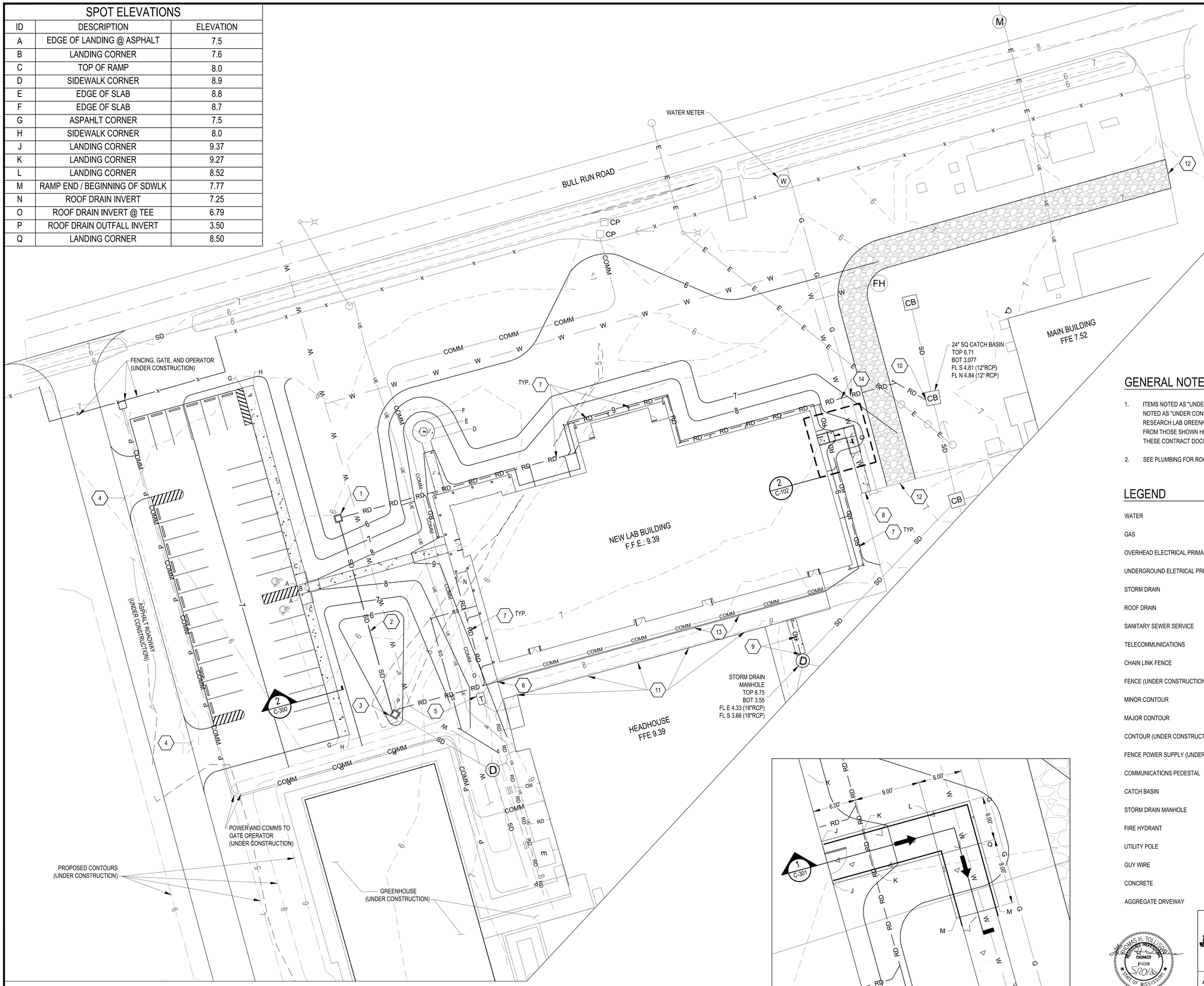

NORTH

1 C-102 GRADING AND DRAINAGE PLAN
SCALE: 1" = 20'

2 C-102 ENLARGED VIEW OF EASTERN ACCESS RAMP
SCALE: 1" = 5'

KEYED NOTES

1. CATCH BASIN PER DETAIL 2/C-301. TOP OF GRATE EL.: 5.8
2. 15" RCP (APPROX. 109 LF). INV. UP: 2.60 INV. DN: 2.41
3. CATCH BASIN PER DETAIL 2/C-301. TOP OF GRATE EL.: 5.8. OUTLET INV. EL.: ± 2.31 (MATCH EXISTING STORM DRAIN INV. EL.)
4. MATCH END OF NEW ASPHALT DRIVEWAY TO PROPOSED ASPHALT ROADWAY ELEVATIONS.
5. PROVIDE NEW TELECOM VAULT TO MATCH EXISTING. TOP OF NEW VAULT TO BE 3" ABOVE ADJACENT FINISHED GRADE ON ALL SIDES. PROTECT AND RELOCATE COMM. LINE FEEDS AS REQUIRED TO FACILITATE VAULT ADJUSTMENT AND OTHER NEW CONSTRUCTION.
6. CONNECT TO TRENCH DRAIN @ INV. ± 7.33. SEE PLUMBING FOR CONTINUATION.
7. 12" ROOF DRAIN MAIN. PROVIDE DOUBLE 45 DEG BENDS AND CLEANOUTS AT ALL CHANGES IN DIRECTION. PROVIDE CLEANOUTS AT ALL UPSTREAM PIPE ENDS. MAINTAIN MIN. 0.2% SLOPE ON ALL REACHES. SEE ARCHITECTURAL FOR CONNECTIONS TO DOWNSPOUTS.
8. MATCH NEW SIDEWALK END TO EXISTING ASPHALT PAVEMENT EL. (APPROX 7.46)
9. 8" PVC DRAIN. ROUTE FROM TRENCH DRAIN INVERT (COORDINATE WITH PLUMBING). TIE INTO EXISTING MANHOLE @ EL.: 7.0'. REPAIR REMOVED PAVEMENT WITH CONCRETE PATCH PER 8/C-300. PROVIDE CONNECTION TO EXISTING MANHOLE PER DETAIL 5/C301
10. CONNECT ROOF DRAIN @ INV. EL.: 4.85' TO EXISTING CATCH BASIN PER DETAIL 5/C-301.
11. CONNECT EXISTING DOWNSPOUTS ALONG THE HEAD HOUSE'S NORTHERN WALL TO TRENCH DRAIN SYSTEM IN BREEZEWAY. SEE PLUMBING FOR DETAILS.
12. GRADE AGGREGATE FLUSH WITH ROADWAY PAVEMENT.
13. TRENCH DRAIN. SEE PLUMBING AND STRUCTURAL DRAWINGS.
14. PROVIDE DOUBLE 45DEG ELBOWS TO LOWER SECTION OF EXISTING UTILITY SERVICES AS REQUIRED TO MAINTAIN 12" MIN CLEARANCE FROM ROOF DRAIN LINE.

GENERAL NOTES

1. ITEMS NOTED AS "UNDER CONSTRUCTION" ON THIS SHEET ARE NOT TO BE CONSTRUCTED UNDER THIS CONTRACT. ITEMS NOTED AS "UNDER CONSTRUCTION" ARE SHOWN AS PORTRAYED IN DESIGN DOCUMENTS ENTITLED "SUGARCANE RESEARCH LAB GREENHOUSE DESIGN" DATED 09/17/24. AS-BUILT LOCATIONS AND LAYOUT OF THESE ITEMS MAY VARY FROM THOSE SHOWN HEREIN. THESE ITEMS WERE NOT COMPLETE AT TIME OF SURVEY, DESIGN, OR PRODUCTION OF THESE CONTRACT DOCUMENTS.
2. SEE PLUMBING FOR ROOF DRAIN PLUMBING INFORMATION IN BREEZEWAY.

LEGEND	EXISTING	NEW
WATER	W	
GAS	G	
OVERHEAD ELECTRICAL PRIMARY	E E	
UNDERGROUND ELETRICAL PRIMARY	UE	
STORM DRAIN	SD	SD
ROOF DRAIN	RD RD	RD RD
SANITARY SEWER SERVICE	SS	SS
TELECOMMUNICATIONS	COMM	
CHAIN LINK FENCE	X	
FENCE (UNDER CONSTRUCTION)	X	
MINOR CONTOUR	6	7
MAJOR CONTOUR	5	
CONTOUR (UNDER CONSTRUCTION)	8	
FENCE POWER SUPPLY (UNDER CONSTRUCTION)	P	
COMMUNICATIONS PEDESTAL	CP	
CATCH BASIN	CB	
STORM DRAIN MANHOLE	D	
FIRE HYDRANT	FH	
UTILITY POLE		
GUY WIRE		
CONCRETE		
AGGREGATE DRVEWAY		

0 5' 10' 15'
SCALE: 1"=5'-0"

0 20' 40' 60'
SCALE: 1"=20'-0"

THOMAS H. TOLLISON 10338 REGISTERED PROFESSIONAL ENGINEER STATE OF MISSISSIPPI 5/20/26

Johnson Mˢ Adams
ENGINEERS/SURVEYORS/PLANNERS • GREENWOOD, TUPELO AND CLEVELAND
P.O. BOX 511, GREENWOOD, MISSISSIPPI • (662) 455-6943

NO.	DATE	BY	DESCRIPTION

REVISIONS

USDA Agricultural Research Service

USDA AGRICULTURAL RESEARCH SERVICE
SUGARCANE RESEARCH LABORATORY
HOUMA, LOUISIANA

GRADING PLAN

A-E FIRM	USDA
PROJECT MANAGER	EPM
REH	WN
DESIGNER	PPM
JLF	XXX
CHECKED BY	SAFETY & HEALTH
DRL	CM
JOB #	REAL PROPERTY
5825	JS

PROJECT NO.	AGRICULTURAL RESEARCH SERVICE FACILITIES ENGINEERING BRANCH 5106 SUNNYSIDE AVENUE BELTSVILLE, MD 20705-5100	SHEET
XXX		C-102
DATE		6 OF 176
05/20/2026		

J:\greenwood\2025_Jobs\5825 USDA Sugarcane Research Lab Houma LA\07 Working Folder\Civil\C102.dwg
May 19, 2026 - 3:09pm

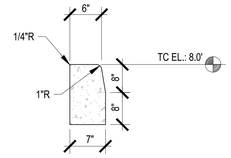

NOTE:
1. PROVIDE EXPANSION JOINTS AT 20' ON CENTER

1 C-300 TYPICAL CONCRETE CURB
SCALE: NONE

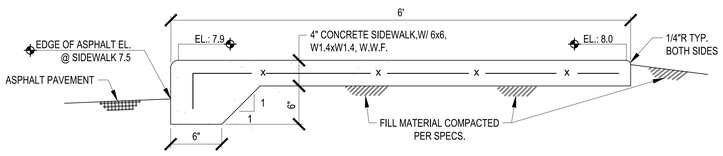

2 C-300 TYPICAL CONCRETE WALK AT PARKING LOT
SCALE: NONE

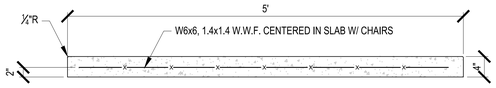

6 C-300 TYPICAL CONCRETE WALK (SITE)
SCALE: NONE

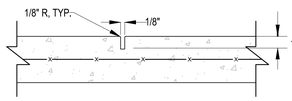

CONTROL JOINT (WALK)

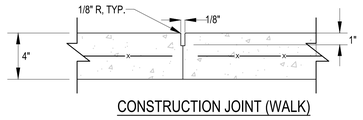

CONSTRUCTION JOINT (WALK)

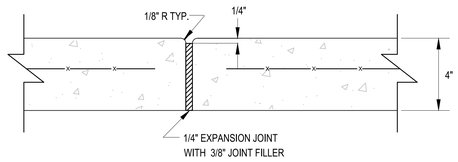

EXPANSION JOINT (WALK)

NOTE:
1. CONTRACTOR MAY USE CONSTRUCTION JOINTS IN LIEU OF CONTROL JOINTS AT HIS OPTION.
2. PROVIDE CONTROL/CONSTRUCTION JOINTS AT MAXIMUM SPACINGS OF 5 FEET ON CENTER.
3. PROVIDE EXPANSION JOINTS AT MAXIMUM SPACINGS OF 20 FEET ON CENTER AND AT THE ABUTMENT OF ALL STRUCTURES.

7 C-300 TYPICAL CONCRETE WALK JOINT DETAILS
SCALE: NONE

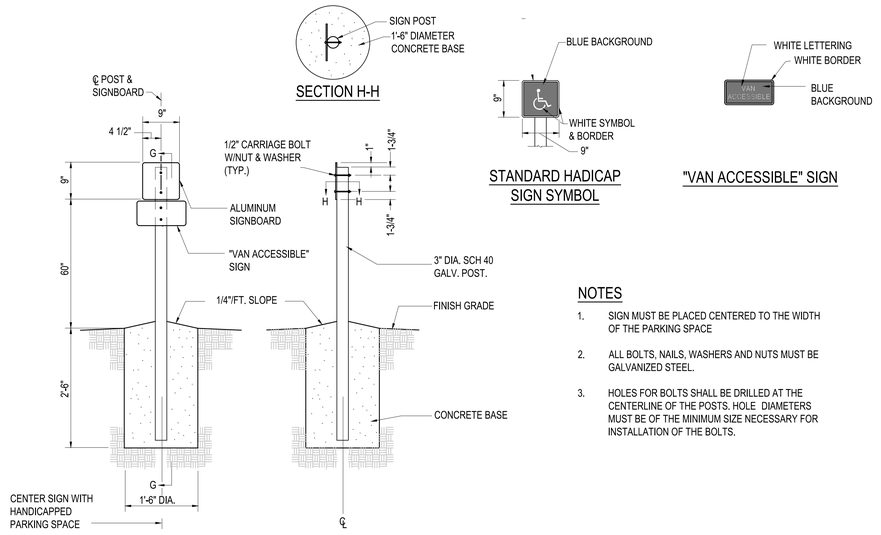

NOTES
1. SIGN MUST BE PLACED CENTERED TO THE WIDTH OF THE PARKING SPACE
2. ALL BOLTS, NAILS, WASHERS AND NUTS MUST BE GALVANIZED STEEL.
3. HOLES FOR BOLTS SHALL BE DRILLED AT THE CENTERLINE OF THE POSTS. HOLE DIAMETERS MUST BE OF THE MINIMUM SIZE NECESSARY FOR INSTALLATION OF THE BOLTS.

3 C-300 TYPICAL HANDICAP PARKING SIGN DETAIL
SCALE: NONE

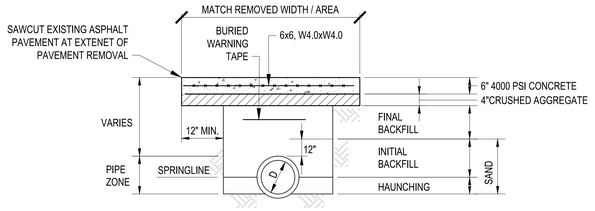

PAVEMENT REPAIR / PATCH

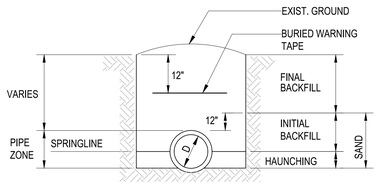

TURFED AREA

8 C-300 TYPICAL TRENCH DETAILS
SCALE: NTS

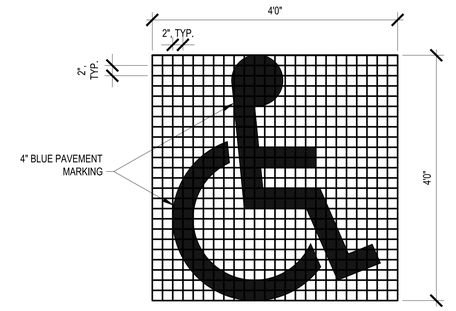

NOTE: CENTER IN PARKING SPACE

4 C-300 TYPICAL HANDICAP SYMBOL DETAIL
SCALE: NONE

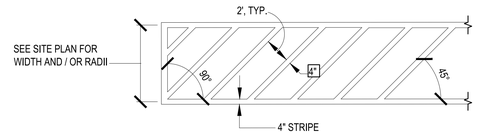

5 C-300 TYPICAL CROSS HATCHING DETAIL
SCALE: NONE

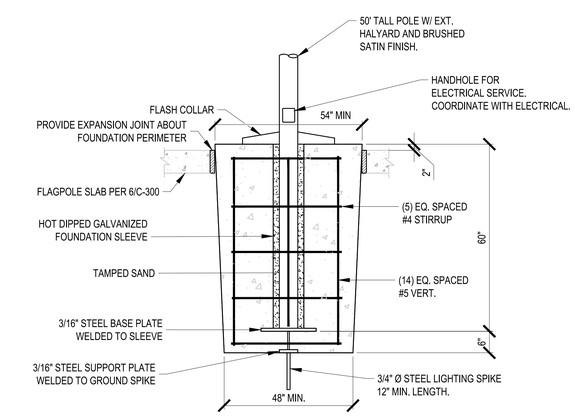

9 C-300 FLAG POLE FOUNDATION DETAIL
SCALE: NONE

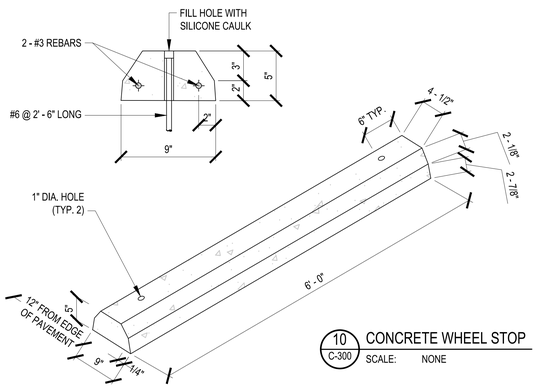

10 C-300 CONCRETE WHEEL STOP
SCALE: NONE

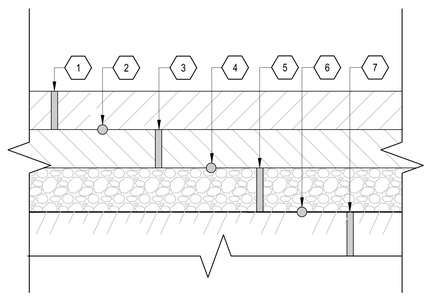

NOTES:
1. 2" OF LOUISIANA DOTD 1" NMS MIX
2. TACK COAT.
3. 4" OF LOUISIANA DOTD 1 1/2" NMS MIX
4. PRIME COAT
5. 6" OF LA DOTD BASE COURSE STONE COMPACTED TO 98% ASTM D1557.
6. LA DOTD CLASS D GEOTEXTILE MATL.
7. MIN. OF 12" OF SUITABLE, PROCESSED IN-SITE SOILS OR STRUCTURAL FILL COMPACTED TO 95% ASTM D1557.

11 C-300 TYPICAL PAVEMENT DETAILS
SCALE: NONE

STEPHEN H. TOUCHSTONE
REGISTERED PROFESSIONAL ENGINEER
#19338
STATE OF MISSISSIPPI

Jones Johnson M'Adams PSM P.A.
PROFESSIONAL ENGINEERS · PLANNERS · SURVEYORS · ENVIRONMENT
P.O. BOX 313, GREENWOOD, MISSISSIPPI · (662) 455-4943

NO.	DATE	BY	DESCRIPTION
			REVISIONS

USDA Agricultural Research Service

USDA AGRICULTURAL RESEARCH SERVICE
SUGARCANE RESEARCH LABORATORY
HOUMA, LOUISIANA

TYPICAL SITE DETAILS

A-E FIRM	USDA
PROJECT MANAGER: REH	EPM: WN
DESIGNER: JMD	PPM: XXX
CHECKED BY: DRL	SAFETY & HEALTH: CM
JOB #: 5825	REAL PROPERTY: JS

PROJECT NO. XXX
DATE 05/20/2026

AGRICULTURAL RESEARCH SERVICE
FACILITIES ENGINEERING BRANCH
5106 SUNNYSIDE AVENUE
BELTSVILLE, MD 20705-5100

SHEET C-300
7 OF 176

J:\greenwood\2025 Jobs\5825 USDA Sugarcane Research Lab Houma LA\07 Working Folder\Civil\C300.dwg
May 19, 2026 - 3:08pm

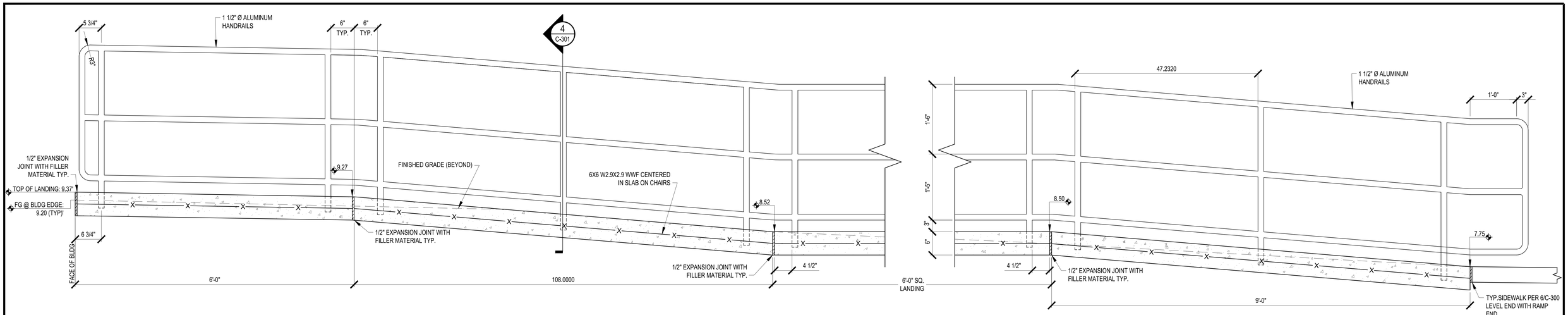

1 C-301 PROFILE OF ACCESS RAMP
SCALE: 1" = 10'

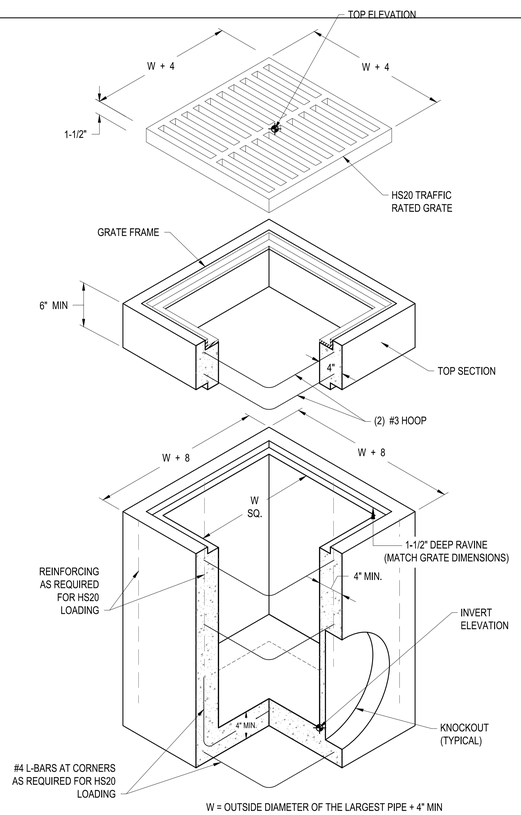

W = OUTSIDE DIAMETER OF THE LARGEST PIPE + 4" MIN

1. CATCH BASINS SHALL BE CONSTRUCTED IN ACCORDANCE WITH ASTM C478 (AASTO M 199) & C890.
2. AS AN ACCEPTABLE ALTERNATIVE TO REBAR, WELDED WIRE FABRIC HAVING A MIN. AREA OF 0.12 SQ. IN. PER FT. MAY BE USED. WELDED WIRE FABRIC SHALL COMPLY WITH ASTM A497 (AASHTO M 221). WIRE FABRIC SHALL NOT BE PLACED IN KNOCKOUTS.
3. ALL CONCRETE SHALL BE 4000 PSI.
4. PRECAST BASES SHALL BE FURNISHED WITH CUTOUTS OR KNOCKOUTS. ALL PIPES SHALL BE INSTALLED IN FACTORY PROVIDED KNOCKOUTS.
5. KNOCKOUT OR CUTOUT HOLE SIZE IS EQUAL TO PIPE OUTER DIAMETER PLUS 2 INCHES.
6. ROUND KNOCKOUTS SHALL BE LOCATED ON THE REQUIRED SIDE(S).
7. THE TAPER ON THE SIDES OF THE PRECAST BASE SECTION AND RISER SECTION SHALL NOT EXCEED 1/2" PER FT.
8. CATCH BASIN FRAME AND GRATE SHALL BE IN ACCORDANCE WITH STANDARD SPECIFICATIONS AND MEET THE STRENGTH REQUIREMENTS OF FEDERAL SPECIFICATION RR-F-621D. MATING SURFACES SHALL BE FINISHED TO ENSURE NON-ROCKING FIT WITH ANY COVER POSITION.
9. BACKFILL SHALL BE PLACED IN UNIFORM 6" LIFT AND COMPACTED TO 98% STANDARD PROCTOR IN A MANOR THAT PREVENTS DISPLACEMENT DURING CONSTRUCTION.
10. PACK AREA BETWEEN THE PIPE AND KNOCKOUT WITH NON-SHRINK GROUT.
11. PLACE FULL DEPTH 1/2" THICK EXPANSION MATERIAL BETWEEN THE TOP AND ADJOINING STRUCTURES OR PAVEMENT.
12. FINISH GRADE ADJACENT AREAS TO DRAIN TO THE GRATE.

2 C-301 TYPICAL CATCH BASIN DETAIL
SCALE: NTS

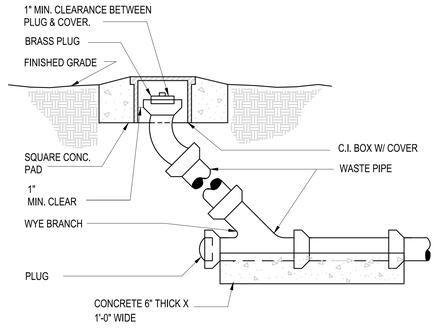

3 C-301 TYPICAL CLEANOUT DETAIL
SCALE: NTS

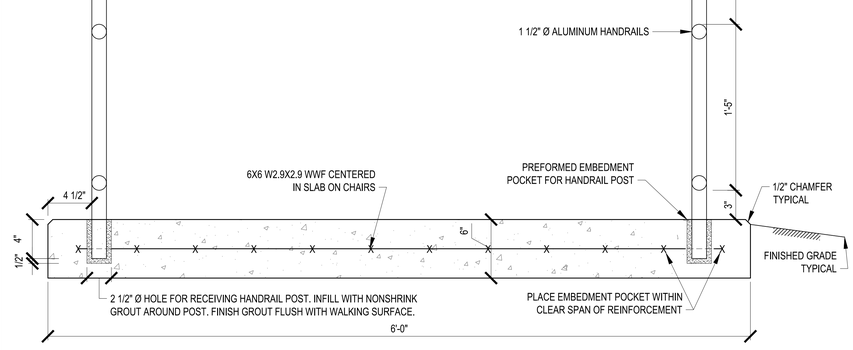

4 C-301 TYPICAL ACCESS RAMP SECTION
SCALE: NTS

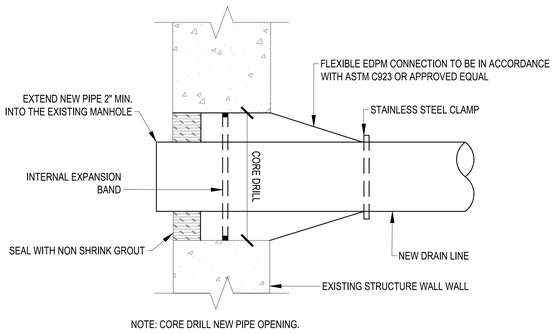

NOTE: CORE DRILL NEW PIPE OPENING.

5 C-301 CONNECTION TO EXISITNG MANHOLE / CATCH BASIN
SCALE: NTS

THOMAS H. TOLLISON — REGISTERED PROFESSIONAL ENGINEER #19338 — 5/20/26 — STATE OF MISSISSIPPI

0 10' 20' 30'
SCALE: 1"=10'-0"

Johnson Mitchell Adams PLLC — CIVIL ENGINEERS • LAND SURVEYORS • PLANNERS — FIRM P.A. — P.O. BOX 913, GREENWOOD, MISSISSIPPI 38935 (662) 455-6943

NO.	DATE	BY	DESCRIPTION
			REVISIONS

A-E FIRM	USDA
PROJECT MANAGER: REH	EPM: WN
DESIGNER: JMD	PPM: XXX
CHECKED BY: DRL	SAFETY & HEALTH: CM
JOB #: 5825	REAL PROPERTY: JS

USDA Agricultural Research Service

USDA AGRICULTURAL RESEARCH SERVICE
SUGARCANE RESEARCH LABORATORY
HOUMA, LOUISIANA

TYPICAL DETAILS

PROJECT NO. XXX	AGRICULTURAL RESEARCH SERVICE FACILITIES ENGINEERING BRANCH 5100 SUNNYSIDE AVENUE BELTSVILLE, MD 20705-5100	SHEET C-301
DATE 05/20/2026		8 OF 176

J:\greenwood\2025 Jobs\5825 USDA Sugarcane Research Lab Houma LA\07 Working Folder\Civil\C301.dwg
May 19, 2026 - 3:09pm

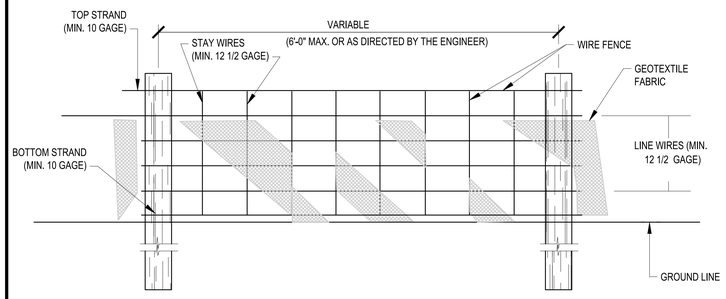

FRONT ELEVATION

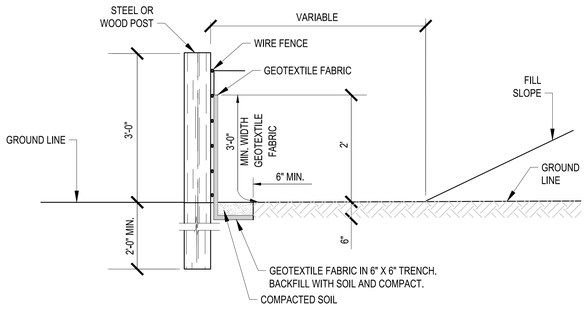

SIDE ELEVATION

NOTES:

1. WIRE MUST BE MINIMUM OF 32" IN WIDTH AND MUST HAVE A MINIMUM OF 6 LINE WIRES WITH 12" STAY SPACING.
2. GEOTEXTILE FABRIC MUST BE A MINIMUM OF 36" IN WIDTH AND MUST BE FASTENED ADEQUATELY TO THE WIRE AS DIRECTED BY THE ENGINEER.
3. STEEL POST MUST BE 5'-0" IN HEIGHT AND OF THE SELF-FASTENER ANGLE STEEL TYPE. WOOD POST MUST BE A MINIMUM OF 5'-0" IN HEIGHT AND 3" OR MORE IN DIAMETER. WIRE FENCE MUST BE FASTENED TO WOODEN POST WITH NOT LESS THAN 9 GAGE WIRE STAPLES 1" LONG.
4. GEOTEXTILE FABRIC MEETING THE TYPE II MATERIAL REQUIREMENTS AND INSTALLED ACCORDING TO SPECIFICATIONS MAY BE USED WITHOUT WIRE FENCE.

1 C-400 TEMPORARY SILT FENCE DETAIL

SCALE: NTS

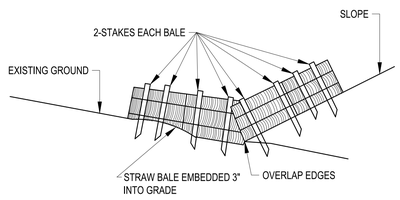

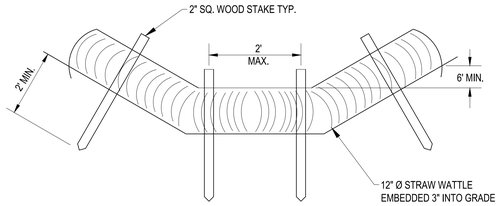

FALL OF DITCH (%)	DISTANCE (ft.)
0 - 2	100'
>2 - 3	75'
>3 - 4	50'
>4 - 5	40'
>5 - 6	30'
>6	25'

SWALE PROTECTION

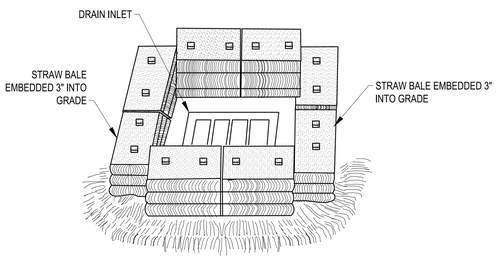

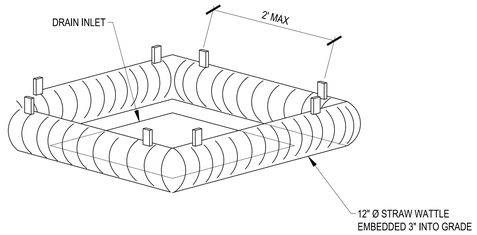

INLET PROTECTION

2 C-400 TYPICAL DRAINAGE FEATURE PROTECTION DETAILS

SCALE: NTS

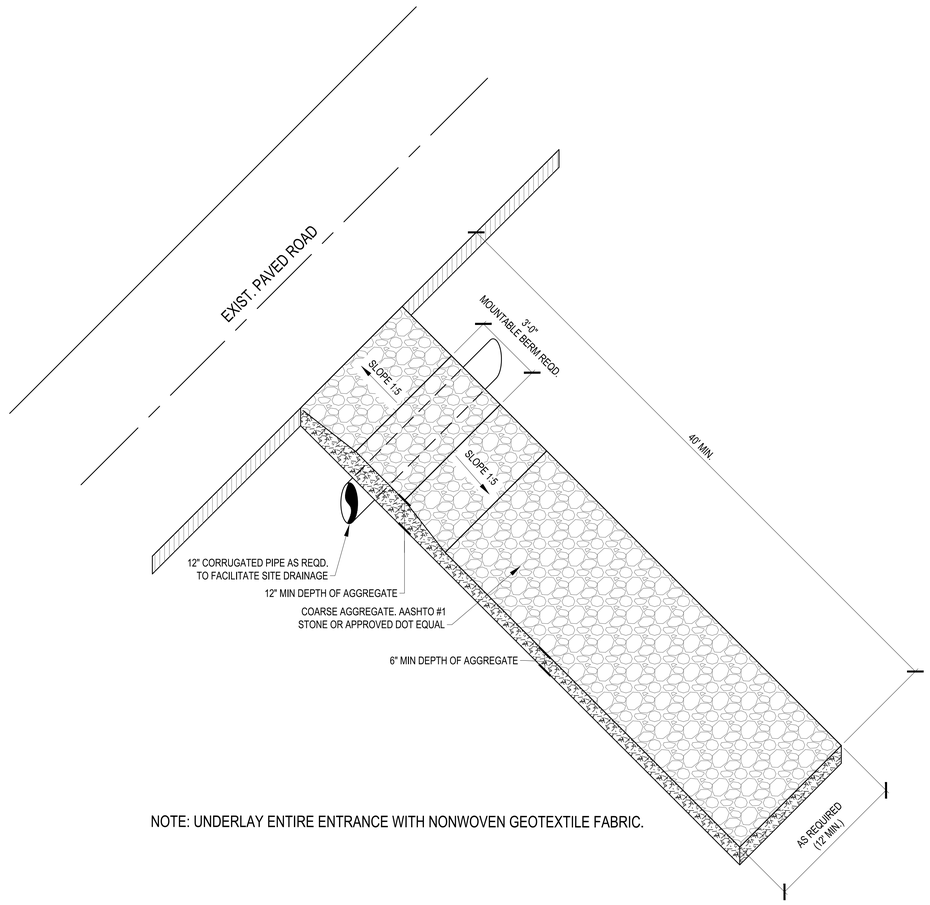

NOTE: UNDERLAY ENTIRE ENTRANCE WITH NONWOVEN GEOTEXTILE FABRIC.

3 C-400 TYPICAL DRAINAGE FEATURE PROTECTION DETAILS

SCALE: NTS

THOMAS H. TOLLIVER
REGISTERED PROFESSIONAL
ENGINEER
#10338
5/20/26
STATE OF MISSISSIPPI

Johnson Mirmiran Adams PLLC
ARCHITECTS/ENGINEERS/PLANNERS/ TOURISTRIC/ MANAGEMENT
P.O. BOX 513, GREENWOOD, MISSISSIPPI - (662) 455-6423

NO.	DATE	BY	DESCRIPTION

REVISIONS

A-E FIRM	USDA
PROJECT MANAGER	REH
EPM	WN
DESIGNER	JMD
PPM	XXX
CHECKED BY	DRL
SAFETY & HEALTH	CM
JOB #	5825
REAL PROPERTY	JS

USDA Agricultural Research Service

USDA AGRICULTURAL RESEARCH SERVICE
SUGARCANE RESEARCH LABORATORY
HOUMA, LOUISIANA

EROSION CONTROL DETAILS

PROJECT NO. XXX	AGRICULTURAL RESEARCH SERVICE FACILITIES ENGINEERING BRANCH 5106 SUNNYSIDE AVENUE BELTSVILLE, MD 20705-5100	SHEET C-400
DATE 05/20/2026		9 OF 176

J:\greenwood\2025 Jobs\5825 USDA Sugarcane Research Lab Houma LA\07 Working Folder\Civil\C400.dwg
May 19, 2026 - 2:09pm

GORE ENGINEERING, INC.

Soil and Foundation Investigations
Metairie, Louisiana

Job No. 8840

Boring No. B-1

LOG OF BORING AND TEST RESULTS

Date Boring Drilled: 20 June 2005

Project: SUGARCANE RESEARCH FACILITY - BULL RUN ROAD - HOUMA, LA.
FOR: U.S. DEPARTMENT OF AGRICULTURE
RMF ENGINEERING, INC. - CONSULTING ENGINEERS - BALTIMORE, MD.

Recorded By: Don Tusa

Sample No.	From	To	Stratum Depth in Feet	Visual Classification	*Blows per Foot	Unconfined Compression (Qu) (lbs./sq.ft.)	Water Content (percent)	Dry (lbs./cu.ft.)	Wet (lbs./cu.ft.)	L.L.	P.L.	P.I.
			.0									
1	.5	1.0	1.0	VERY STIFF TAN & GRAY CLAY W/ SILT		5365	21.2	86.4	104.7			
2	1.5	2.0	3.0	MEDIUM STIFF TAN & GRAY SILTY CLAY		1525	32.0	83.9	110.7			
3	3.5	4.0	4.0	MEDIUM STIFF GRAY & TAN CLAY		1285	37.7	82.2	113.2			
4	5.5	6.0		SOFT GRAY CLAY W/ SILT		975	32.9	85.7	113.9			
5	8.5	9.0	10.0			720	36.3	83.6	114.0			
6	11.5	12.0		SOFT GRAY SILTY CLAY W/ SAND LAYERS		820	33.4	84.1	112.2			
7	14.5	15.0	15.0			705	38.9	76.6	106.4			
8	16.0	16.5		SOFT GRAY CLAY W/ SILT (W/ WOOD @ 24.5'-25.0')		810	46.4	69.7	102.0			
9	19.5	20.0										
10	24.5	25.0				790	43.8	67.9	97.7			
11	28.0	28.5	29.0			830	52.7	66.4	101.4			
12	29.5	30.0	30.0	VERY SOFT GRAY SANDY CLAY		405	37.8	76.7	105.7			
13	31.0	31.5		SOFT GRAY CLAY W/ SILT		665	59.3	63.3	100.8			
14	34.5	35.0	36.0			700	48.1	70.4	104.3			
15	37.0	37.5	39.5	MEDIUM STIFF BROWNISH GRAY ORGANIC CLAY		1200	106.7	42.8	88.5			
16	39.5	40.0		SOFT TO MEDIUM STIFF GRAY CLAY W/ TRACE ORGANIC & WOOD		925	63.9	60.8	99.7			
17	44.5	45.0										
18	49.5	50.0	50.0			1535	97.6	45.7	90.3			

CLAY SILT SAND ORGANIC
Predominant Type Bold. Modifying Type Light.
*140 lb. hammer dropped 30 inches on 2 inch splitspoon sampler after first being seated 6 inches.
REMARKS: Water Table Depth = 2.0 ft (See Text) Free Water Depth = 6.0 ft (See Text)

Fig. 2

GORE ENGINEERING, INC.

Soil and Foundation Investigations
Metairie, Louisiana

Job No. 8840

Boring No. B-2

LOG OF BORING AND TEST RESULTS

Date Boring Drilled: 22 June 2005

Project: SUGARCANE RESEARCH FACILITY - BULL RUN ROAD - HOUMA, LA.
FOR: U.S. DEPARTMENT OF AGRICULTURE
RMF ENGINEERING, INC. - CONSULTING ENGINEERS - BALTIMORE, MD.

Recorded By: Don Tusa

Sample No.	From	To	Stratum Depth in Feet	Visual Classification	*Blows per Foot	Unconfined Compression (Qu) (lbs./sq.ft.)	Water Content (percent)	Dry (lbs./cu.ft.)	Wet (lbs./cu.ft.)	L.L.	P.L.	P.I.
			.0									
1	.5	1.0	1.5	STIFF TAN & GRAY CLAY W/ SILT								
2	1.5	2.0		MEDIUM STIFF TAN & GRAY SILTY CLAY		1180	30.3	82.9	108.0	46	19	27
3	3.5	4.0	5.0			1035	32.6	82.4	109.2			
4	5.5	6.0		SOFT GRAY SILTY CLAY W/ CLAY LAYERS (W/ TRACE WOOD @ 11.5'-12.0')		790	34.5	82.2	110.5			
5	7.5	8.0				975	34.7	83.6	112.6			
6	9.5	10.0				505	36.9	79.7	109.1	42	22	20
7	11.5	12.0				540	42.5	63.2	90.0			
8	14.5	15.0										
9	19.5	20.0				785	44.8	73.9	107.0			
10	24.5	25.0	27.5			875	48.5	68.3	101.4			
11	29.5	30.0	30.0	LOOSE GRAY SILTY FINE SAND		1120+	31.4	80.8	106.2			
12	31.0	31.5		SOFT GRAY SILTY CLAY		855	47.6	69.0	101.9	45	23	22
13	34.5	35.0	35.0									
			37.0	WOOD W/ SOME ORGANIC & CLAY								
14	39.5	40.0		SOFT GRAY CLAY W/ WOOD		960	50.6	64.3	96.9	95	28	67
15	44.5	45.0										
16	49.5	50.0	50.0			690	53.4	61.5	94.4			

CLAY SILT SAND ORGANIC
Predominant Type Bold. Modifying Type Light.
*140 lb. hammer dropped 30 inches on 2 inch splitspoon sampler after first being seated 6 inches.
REMARKS: Water Table Depth = 2.5 ft (See Text) Free Water Depth = 9.0 ft (See Text)
+ equivalent Qu from 1-point triaxial test

Fig. 3

GORE ENGINEERING, INC.

Soil and Foundation Investigations
Metairie, Louisiana

Job No. 8840

Boring No. B-3

LOG OF BORING AND TEST RESULTS

Date Boring Drilled: 23 June 2005

Project: SUGARCANE RESEARCH FACILITY - BULL RUN ROAD - HOUMA, LA.
FOR: U.S. DEPARTMENT OF AGRICULTURE
RMF ENGINEERING, INC. - CONSULTING ENGINEERS - BALTIMORE, MD.

Recorded By: Don Tusa

Sample No.	From	To	Stratum Depth in Feet	Visual Classification	*Blows per Foot	Unconfined Compression (Qu) (lbs./sq.ft.)	Water Content (percent)	Dry (lbs./cu.ft.)	Wet (lbs./cu.ft.)	L.L.	P.L.	P.I.
			.0									
1	.5	1.0		MEDIUM STIFF TO STIFF TAN & GRAY CLAY W/ SILT								
2	1.5	2.0	2.5			1805	36.3	83.1	113.3			
3	3.5	4.0	4.0	SOFT TAN & GRAY CLAY W/ SILT		975	38.9	80.0	111.1	56	24	32
4	5.5	6.0	6.0	SOFT GRAY & TAN CLAY W/ SILT		905	40.4	79.6	111.8			
5	7.5	8.0	8.0	SOFT GRAY CLAY W/ SILT & WOOD		940	39.0	81.3	113.0			
6	9.5	10.0		VERY SOFT GRAY CLAY W/ SILT		425	41.1	75.4	106.4			
7	11.5	12.0	13.5			480	49.0	70.2	104.6			
8	14.5	15.0		SOFT GRAY SILTY CLAY		650	35.2	82.7	111.8	40	20	20
9	19.5	20.0	22.5									
10	24.5	25.0		SOFT GRAY CLAY W/ SOME WOOD		530	56.6	65.4	102.4			
11	29.5	30.0										
12	34.5	35.0	35.0			650	73.6	54.8	95.1			
			36.5	WOOD W/ SOME CLAY								
13	39.5	40.0	40.0	VERY SOFT BROWN ORGANIC CLAY W/ WOOD & HUMUS		355	223.4	21.2	68.6			
14	41.0	41.5		VERY SOFT GRAY CLAY W/ WOOD & ORGANIC		230	99.0	43.8	87.1	124	35	89
15	44.5	45.0	48.5									
16	49.5	50.0	50.0	SOFT GRAY CLAY W/ SOME WOOD		805	69.7	56.9	96.6			

CLAY SILT SAND ORGANIC
Predominant Type Bold. Modifying Type Light.
*140 lb. hammer dropped 30 inches on 2 inch splitspoon sampler after first being seated 6 inches.
REMARKS: Water Table Depth = 2.1 ft (See Text) Free Water Depth = 6.0 ft (See Text)

Fig. 4

GORE ENGINEERING, INC.

Soil and Foundation Investigations
Metairie, Louisiana

Job No. 8840

Boring No. B-4

LOG OF BORING AND TEST RESULTS

Date Boring Drilled: 22 June 2005

Project: SUGARCANE RESEARCH FACILITY - BULL RUN ROAD - HOUMA, LA.
FOR: U.S. DEPARTMENT OF AGRICULTURE
RMF ENGINEERING, INC. - CONSULTING ENGINEERS - BALTIMORE, MD.

Recorded By: Don Tusa

Sample No.	From	To	Stratum Depth in Feet	Visual Classification	*Blows per Foot	Unconfined Compression (Qu) (lbs./sq.ft.)	Water Content (percent)	Dry (lbs./cu.ft.)	Wet (lbs./cu.ft.)	L.L.	P.L.	P.I.
			.0									
1	.5	1.0	1.0	STIFF TAN & GRAY CLAY W/ SILT								
2	1.5	2.0	3.0	MEDIUM STIFF TAN & GRAY CLAY W/ SILT		985	29.2	84.7	109.4			
3	3.5	4.0	5.0	SOFT GRAY & TAN CLAY W/ SILT		740	36.5	81.2	110.8			
4	5.5	6.0	6.0	SOFT GRAY CLAY W/ SILT LAYERS		625	37.1	79.6	109.2			
5	7.5	8.0	9.0	SOFT GRAY SILTY CLAY		620	31.8	87.1	114.8			
6	9.5	10.0		VERY SOFT TO SOFT GRAY SILTY CLAY W/ ROOTS & TRACE WOOD		620	34.4	82.3	110.6			
7	11.5	12.0				360	40.4	76.9	107.9			
8	14.5	15.0				455	41.7	68.9	97.7			
9	19.5	20.0	23.5									
10	24.5	25.0		SOFT TO MEDIUM STIFF GRAY CLAY W/ SILT		970	43.6	71.2	102.2			
11	29.5	30.0										
12	34.5	35.0	35.5			1050	43.3	74.2	106.4			
			37.5	WOOD W/ SOME CLAY								
13	39.5	40.0		SOFT GRAY CLAY W/ WOOD		830	70.5	50.8	86.6			
14	44.5	45.0										
15	49.5	50.0	50.0			880	51.9	64.4	97.8			

CLAY SILT SAND ORGANIC
Predominant Type Bold. Modifying Type Light.
*140 lb. hammer dropped 30 inches on 2 inch splitspoon sampler after first being seated 6 inches.
REMARKS: Water Table Depth = 1.5 ft (See Text) Free Water Depth = 6.0 ft (See Text)

Fig. 5

GORE ENGINEERING, INC.

Soil and Foundation Investigations
Metairie, Louisiana

Job No. 8840

Boring No. B-5

LOG OF BORING AND TEST RESULTS

Date Boring Drilled: 21 June 2005

Project: SUGARCANE RESEARCH FACILITY - BULL RUN ROAD - HOUMA, LA.
FOR: U.S. DEPARTMENT OF AGRICULTURE
RMF ENGINEERING, INC. - CONSULTING ENGINEERS - BALTIMORE, MD.

Recorded By: Don Tusa

Sample No.	From	To	Stratum Depth in Feet	Visual Classification	*Blows per Foot	Unconfined Compression (Qu) (lbs./sq.ft.)	Water Content (percent)	Dry (lbs./cu.ft.)	Wet (lbs./cu.ft.)	L.L.	P.L.	P.I.
			.0									
1	.5	1.0	1.0	VERY STIFF BROWN & GRAY SILTY CLAY								
2	1.5	2.0	3.0	MEDIUM STIFF TAN & GRAY SILTY CLAY		1480	26.4	81.2	102.6	43	19	24
3	3.5	4.0	4.0	STIFF TAN & GRAY SILTY CLAY (FISSURED)		905	28.8	83.9	108.0			
4	5.5	6.0	6.0	SOFT GRAY & TAN CLAY W/ SILT		805	43.5	76.4	109.6			
5	8.5	9.0		SOFT GRAY CLAY W/ WOOD								
6	11.5	12.0				640	42.6	75.0	106.9			
7	14.5	15.0				595	41.4	76.6	108.3	63	22	41
8	19.5	20.0				760	52.0	66.8	101.6			
9	24.5	25.0										
10	29.5	30.0	30.5			500	44.1	71.7	103.3			
11	34.5	35.0	36.0	SOFT BROWN ORGANIC CLAY		555	174.9	25.6	70.5			
12	36.5	37.0	38.5	MEDIUM STIFF BROWNISH GRAY ORGANIC CLAY W/ HUMUS & WOOD		1095	156.9	31.1	79.9			
13	39.5	40.0		VERY SOFT GRAY CLAY W/ WOOD & SOME ORGANIC		390	83.5	48.4	88.8	109	34	75
14	44.5	45.0	47.5									
15	48.0	48.5	49.0	MEDIUM STIFF GRAY CLAY W/ SILT		1000	50.0	70.0	105.0			
16	49.5	50.0	50.0	MEDIUM STIFF BROWNISH GRAY ORGANIC CLAY W/ WOOD		1335	120.5	38.3	84.5			

CLAY SILT SAND ORGANIC
Predominant Type Bold. Modifying Type Light.
*140 lb. hammer dropped 30 inches on 2 inch splitspoon sampler after first being seated 6 inches.
REMARKS: Water Table Depth = 4.2 ft (See Text) Free Water Depth = 12.0 ft (See Text)

Fig. 6

GORE ENGINEERING, INC.

Soil and Foundation Investigations
Metairie, Louisiana

Job No. 8840

Boring No. B-6

LOG OF BORING AND TEST RESULTS

Date Boring Drilled: 21 June 2005

Project: SUGARCANE RESEARCH FACILITY - BULL RUN ROAD - HOUMA, LA.
FOR: U.S. DEPARTMENT OF AGRICULTURE
RMF ENGINEERING, INC. - CONSULTING ENGINEERS - BALTIMORE, MD.

Recorded By: Don Tusa

Sample No.	From	To	Stratum Depth in Feet	Visual Classification	*Blows per Foot	Unconfined Compression (Qu) (lbs./sq.ft.)	Water Content (percent)	Dry (lbs./cu.ft.)	Wet (lbs./cu.ft.)	L.L.	P.L.	P.I.
			.0									
1	.5	1.0		STIFF TAN & GRAY CLAY W/ SILT (FISSURED)		1720	28.7	81.2	104.5			
2	1.5	2.0	2.5			1120	39.0	77.7	108.0			
3	3.5	4.0	5.0	SOFT TAN & GRAY CLAY W/ SILT		715	36.9	80.9	110.7			
4	5.5	6.0		VERY SOFT TO SOFT GRAY CLAY W/ SILT (W/ MUCH WOOD @ 8.5'-9.0')		915	40.6	78.7	110.7			
5	8.5	9.0					39.9					
6	11.5	12.0				440	57.8	63.6	100.3			
7	14.5	15.0				850	55.0	65.7	101.9			
8	19.5	20.0				890	58.7	63.8	101.3			
9	24.5	25.0				950	47.1	71.6	105.3			
10	28.0	28.5	29.0			570	52.9	67.0	102.4			
11	29.5	30.0	30.0	LOOSE GRAY SILTY FINE SAND			30.1					
12	31.0	31.5	32.5	SOFT GRAY CLAY W/ ORGANIC		560	56.4	59.3	92.8			
13	34.5	35.0	37.5	MEDIUM STIFF BROWN ORGANIC CLAY		1270	100.5	33.9	67.9			
14	39.5	40.0		SOFT TO MEDIUM STIFF GRAY CLAY W/ WOOD & SOME ORGANIC		1025	45.8	68.7	100.1			
15	44.5	45.0	47.5									
16	49.5	50.0	50.0	MEDIUM STIFF BROWN CLAY W/ SOME ORGANIC		1790	87.8	40.6	76.3			

CLAY SILT SAND ORGANIC
Predominant Type Bold. Modifying Type Light.
*140 lb. hammer dropped 30 inches on 2 inch splitspoon sampler after first being seated 6 inches.
REMARKS: Water Table Depth = 2.5 ft (See Text) Free Water Depth = 6.0 ft (See Text)

Fig. 7

THOMAS H. TOLLISON
REGISTERED PROFESSIONAL ENGINEER
#10338
5/20/26
STATE OF MISSISSIPPI

The Johnson McAdams Firm P.A.
ARCHITECTS/ENGINEERS • PLANNING • SURVEYING • MANAGEMENT
P.O. BOX 513, GREENWOOD, MISSISSIPPI • (662) 455-4943

NO.	DATE	BY	DESCRIPTION

REVISIONS

A-E FIRM	USDA
PROJECT MANAGER REH	EPM WN
DESIGNER JMD	PPM XXX
CHECKED BY DRL	SAFETY & HEALTH CM
JOB # 5825	REAL PROPERTY JS

USDA

USDA Agricultural Research Service

USDA AGRICULTURAL RESEARCH SERVICE
SUGARCANE RESEARCH LABORATORY
HOUMA, LOUISIANA

BORING LOGS

PROJECT NO. XXX
DATE 05/20/2026

AGRICULTURAL RESEARCH SERVICE
FACILITIES ENGINEERING BRANCH
5106 SUNNYSIDE AVENUE
BELTSVILLE, MD 20705-5100

SHEET C-500
10 OF 176

J:\greenwood\2025 Jobs\5825 USDA Sugarcane Research Lab Houma LA\07 Working Folder\Civil\C500.dwg
May 19, 2026 - 3:08pm

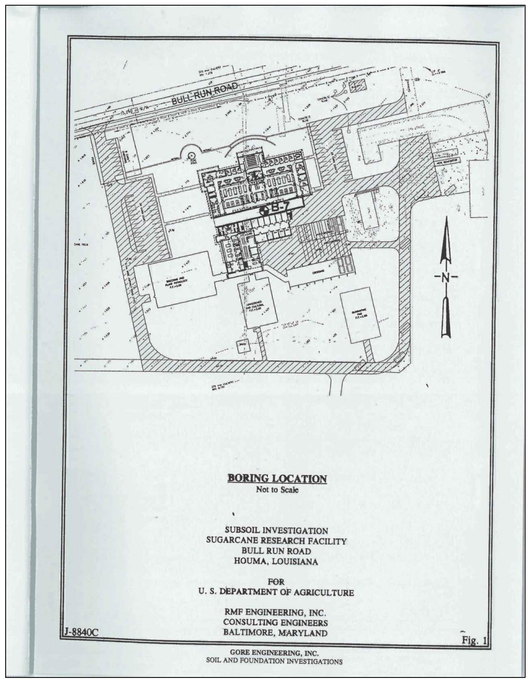

BORING LOCATION
Not to Scale

SUBSOIL INVESTIGATION
SUGARCANE RESEARCH FACILITY
BULL RUN ROAD
HOUMA, LOUISIANA

FOR
U. S. DEPARTMENT OF AGRICULTURE

RMF ENGINEERING, INC.
CONSULTING ENGINEERS
BALTIMORE, MARYLAND

J-8840C

Fig. 1

GORE ENGINEERING, INC.
SOIL AND FOUNDATION INVESTIGATIONS

GORE ENGINEERING, INC.

Soil and Foundation Investigations
Metairie, Louisiana

Job No. 8840-C

Boring No. B-7

LOG OF BORING AND TEST RESULTS

Date Boring Drilled 6 December 2006

Project: SUGARCANE RESEARCH FACILITY - BULL RUN ROAD - HOUMA, LOUISIANA
FOR: U. S. DEPARTMENT OF AGRICULTURE
RMF ENGINEERING, INC. - CONSULTING ENGINEERS - BALTIMORE, MARYLAND

Recorded By: Stephen E. Wale / Terence Smothers

Sample No.	Sample Depth in Feet From	Sample Depth in Feet To	Stratum Depth in Feet	VISUAL CLASSIFICATION	*Blows per Foot	Symbol Log	Scale (Tons) 0	UNCONFINED COMPRESSIVE Qu (lbs./sq.ft.)	WATER CONTENT (percent)	UNIT WEIGHT (lbs./cu.ft.) DRY	UNIT WEIGHT (lbs./cu.ft.) WET	ATTERBERG LIMITS L.L.	ATTERBERG LIMITS P.L.	ATTERBERG LIMITS P.I.
1	1	1.0	0	STIFF TAN & GRAY SILTY CLAY										
2	1.5	2.0	1.0	MEDIUM STIFF TAN & GRAY SILTY CLAY				1100	31.1	87.6	114.9			
3	3.5	4.0	2.5	MEDIUM STIFF GRAY & TAN SILTY CLAY				1025	38.8	80.7	112.0			
4	5.5	6.0	4.5	SOFT GRAY SILTY CLAY				600	36.9	84.7	115.9			
5	8.5	9.0	8.5				10	1045	64.3	61.4	100.8	87	30	57
6	11.5	12.0												
7	14.5	15.0					15	650	61.1	60.1	96.8			
8	19.5	20.0					20	980	56.8	67.2	105.4			
9	24.5	25.0					25	840	55.9	65.8	102.6			
10	29.0	29.5		SOFT GRAY CLAY			30	580	54.1	68.2	105.1	68	22	46
11	34.5	35.0					35	885	69.1	59.2	100.1			
12	39.5	40.0					40	590	93.5	47.0	90.9			
13	44.5	45.0					45	910	88.4	48.6	91.5	166	41	125
14	49.5	50.0	48.5	MEDIUM STIFF BROWN ORGANIC CLAY W/ WOOD			50	1125	178.4	28.2	78.6	241	75	166
15	54.5	55.0	52.0	VERY SOFT TO SOFT GRAY CLAY			55	650	55.1	65.1	101.0	103	27	76
16	59.5	60.0					60	245	55.1	66.7	103.5			
17	64.5	65.0	62.0				65	1155	60.0	62.7	100.3	88	20	68
18	69.5	70.0					70	1285	52.0	68.3	103.8			
19	74.5	75.0		MEDIUM STIFF GRAY CLAY (FISSURED 84.5'-85.0')			75	1115	62.6	61.0	99.2			
20	79.5	80.0					80					109	27	82
21	84.5	85.0					85	550	62.3	58.8	95.5			
22	89.5	90.0	90.0				90	1295	61.2	62.0	99.9			
							95							
							100							

CLAY SILT SAND ORGANIC — Predominant Type Bold. Modifying Type Light.

*140 lb. hammer dropped 30 inches on 2 inch splitspoon sampler after first being seated 6 inches.

REMARKS: Water Table Depth = 3.0 ft (See Text)
Free Water Depth = 6.0 ft (See Text)

Fig. 2

NO.	DATE	BY	DESCRIPTION	
REVISIONS				

Johnson, Mirmiran & Thompson, Inc. — Johnson, Mirmiran & Thompson, P.A.
ARCHITECTS/ENGINEERS/PLANNERS/SURVEYORS/MANAGEMENT
P.O. BOX 313, GREENWOOD, MISSISSIPPI - (662) 455-6463

USDA Agricultural Research Service

USDA AGRICULTURAL RESEARCH SERVICE
SUGARCANE RESEARCH LABORATORY
HOUMA, LOUISIANA

BORING LOGS

A-E FIRM	USDA
PROJECT MANAGER	REH
EPM	WN
DESIGNER	JMD
PPM	XXX
CHECKED BY	DRL
SAFETY & HEALTH	CM
JOB #	5825
REAL PROPERTY	JS

PROJECT NO. XXX
DATE 05/20/2026

AGRICULTURAL RESEARCH SERVICE
FACILITIES ENGINEERING BRANCH
5106 SUNNYSIDE AVENUE
BELTSVILLE, MD 20705-5100

SHEET C-501
11 OF 176

J:\greenwood\2025 Jobs\5825 USDA Sugarcane Research Lab Houma LA\07 Working Folder\Civil\C501.dwg
May 19, 2026 - 3:09pm

A. DESIGN CRITERIA

1 DESIGN REFERENCES:
1.1 BASED ON 2024 INTERNATIONAL BUILDING CODE (IBC-2024).
1.2 CLASSIFICATION OF BUILDINGS FOR WIND AND EARTHQUAKE LOADS IS "CATEGORY II"

2 DESIGN DEAD LOADS (IN ADDITION TO STRUCTURAL COMPONENT WEIGHTS)
2.1 ROOFING SYSTEM (INCLUDING INSULATION) = 6 PSF
2.2 SUSPENDED CEILING AND ACOUSTICAL FIBER TILE = 4 PSF
2.3 MECHANICAL & ELECTRICAL ALLOWANCE = 6 PSF
2.5 SPRINKLER SYSTEM = 2 PSF

3 DESIGN LIVE LOADS
3.1 ROOF LOADS
3.1.1 ROOF LIVE LOAD = 20 PSF
3.2 FLOOR LOADS
3.2.1 OFFICES W/20PSF PARTITION = 70 PSF
3.2.2 MECHANICAL/ELECTRICAL ROOMS =125 PSF OR ACTUAL WEIGHT OF EQUIPMENT
3.2.3 STORAGE (LIGHT) = 125 PSF
3.2.4 STORAGE (HEAVY) = 250 PSF
3.2.5 ALL OTHER AREAS = 100 PSF

4 WIND LOADS
4.1 PER ASCE 7-22
4.2 BASIC WIND SPEED = 142 mph
4.3 IMPORTANCE FACTOR, I = 1.0
4.4 EXPOSURE CATEGORY MUST BE "C".

5 EARTHQUAKE LOADS
5.1 BASED ON ASCE 7-22.
5.2 CATEGORY B
5.3 SITE CLASS: E

6 RAIN LOADS
6.1 15-MINUTE PRECIPITATION INTENSITY: 9.45 IN/HR

7 FOUNDATIONS

7.1 PILE LOAD CAPACITY: THE ASSUMED PILE CAPACITY IS SHOWN IN THE FOLLOWING TABLE. THIS CAPACITY WILL BE VERIFIED.

LENGTH OF PILE IN FEET	SINGLE PILE LOAD CAPACITY IN KIPS FOR CLASS "B" TIMBER PILES
60	32
65	35
70	38
75	40

7.1.1 TIMBER PILES MUST BE CLASS "B" TIMBER PILES WITH A MINIMUM BUTT DIA. OF 16" AND A MINIMUM TIP DIA. OF 6".

7.2 SLABS
7.2.1 FLOOR SLAB MUST BE STRUCTURALLY REINFORCED AND SUPPORTED BY GRADE BEAMS WHICH ARE PILE-SUPPORTED DUE TO THE POTENTIAL EXCESSIVE SETTLEMENT.
7.3 SUBGRADE
7.3.1 SUBGRADE MUST BE AS UNIFORM AS POSSIBLE OVER THE ENTIRE FOUNDATION AREA.

B. CONSTRUCTION SPECIFICATIONS

8 CONCRETE
8.1 CONCRETE DESIGN IS BASED ON THE "BUILDING CODE REQUIREMENTS FOR REINFORCED CONCRETE", ACI 318, LATEST EDITION.
8.2 REQUIRED 28-DAY COMPRESSIVE STRENGTH FOR ALL STRUCTURAL CONCRETE = 4 KSI
8.3 PROVIDE TYPE II CEMENT FOR ALL CONCRETE.
8.4 EXPOSED EDGES AND CORNERS, INCLUDING ALL EXTERIOR CONCRETE EDGES, MUST BE CHAMFERED 3/4" ON THE EXTERIOR EXPOSED CORNERS.
8.5 ANCHOR BOLTS FOR BEAM BEARING PLATES AND COLUMN BASE PLATES MUST BE PLACED WITH SETTING TEMPLATES.
8.6 REINFORCEMENT STEEL
8.6.1 DETAILING, FABRICATION, AND PLACEMENT OF REINFORCING STEEL MUST BE IN ACCORDANCE WITH ACI 318, EXCEPT WHERE OTHERWISE INDICATED.
8.6.2 REINFORCEMENT STEEL MUST CONFORM TO ASTM A615, GRADE 60, EXCEPT STIRRUPS, TIES, AND EMBEDDED PLATE ANCHORS, WHICH MUST BE ASTM A615 GRADE 40.
8.6.3 REINFORCEMENT STEEL WELDED TO EMBEDDED PLATES OR OTHER STRUCTURAL STEEL SHAPES MUST CONFORM TO ASTM A706, GRADE 60.
8.6.4 WELDED WIRE FABRIC MUST CONFORM TO ASTM A185M.
8.6.5 PLACE 2-#5 BARS (1 EACH FACE) WITH A 2' PROJECTION ON SIDES AND DIAGONALLY ACROSS CORNERS OF OPENINGS LARGER THAN 12" SQUARE IN CONCRETE SLABS UNLESS OTHERWISE NOTED.
8.6.6 MAKE BARS CONTINUOUS AROUND CORNERS OR PROVIDE CORNER BARS OF EQUAL SIZE AND SPACINGS WITH REQUIRED LAPS.
8.6.7 SPLICES
8.6.7.1 SPLICES ARE TO BE MADE SO THAT THE REQUIRED CLEAR DISTANCE TO FACE OF CONCRETE WILL BE MAINTAINED.
8.6.7.2 WHEN REINFORCING BARS OF DIFFERENT SIZE ARE TO BE SPLICED, THE LENGTH OF LAP MUST BE GOVERNED BY THE LARGER DIAMETER BAR.
8.6.7.3 BARS SPLICED BY NO CONTACT LAP SPLICES MUST NOT BE SPACED TRANSVERSELY FATHER APART THAN ONE-FIFTH THE REQUIRED LAP SPLICE LENGTH, NOR 6 IN.
8.6.7.4 DEVELOPMENT LENGTH AND LENGTH OF LAPPED SPLICE

f'c = 4 KSI — Fy = 60 KSI

TENSION AND DEVELOPMENT SPLICE LENGTHS - 4000 PSI CONCRETE

	DEVELOPMENT LENGTH		SPLICE LENGTH		STANDARD 90° HOOK		
BAR SIZE	TOP BAR (INCHES)	OTHER BAR (INCHES)	TOP BAR (INCHES)	OTHER BAR (INCHES)	EMBED (INCHES)	LEG LEGNTH (INCHES)	BEND DIA. (INCHES)
#3	19	15	24	22	6	6	2.25
#4	25	19	32	25	8	8	3
#5	31	24	40	31	10	10	3.75
#6	37	29	48	37	12	12	4.5
#7	54	42	70	54	14	14	5.25
#8	62	48	80	25	16	16	6

NOTES:
1. STRAIGHT DEVELOPMENT LENGTH AND SPLICE LENGTHS ARE BASED ON UNCOATED BARS ASSUMING CENTER TO CENTER BAR SPACING GREATER THAN 3 BAR DIAMETERS WITHOUT TIES OR STIRRUPS OR 2 BAR DIAMETER WITH TIES OR STIRRUPS, AND CLEAR CLOVER OF 1 BAR DIAMETER.
2. TOP BARS ARE HORIZONTAL BARS WITH MORE THAN 12 INCHES OF CONCRETE BELOW THE BAR.
3. STANDARD 90 DEGREE HOOK EMBEDMENT LENGTHS ARE BASED ON SIDE COVER GREATER THAN 2.5 INCHES AND END COVER GREATER THAN 2 INCHES WITHOUT TIES AROUND HOOKS.

8.6.8 UNLESS SPECIFICALLY DETAILED, SPLICE CONTINUOUS BARS IN WALLS AND BEAMS AS FOLLOWS:
7.6.8.1 TOP BARS AT MIDSPAN.
7.6.8.2 BOTTOM BARS OVER SUPPORTS.
8.7 MINIMUM CONCRETE PROTECTION FOR REINFORCEMENT MUST BE IN ACCORDANCE WITH ACI 318, LATEST EDITION, UNLESS OTHERWISE NOTED ON THE DRAWINGS.
8.8 PROVIDE ACCESSORIES NECESSARY TO SUPPORT REINFORCEMENT AT POSITIONS SHOWN ON THE DRAWINGS.
8.9 SUBSTITUTION OF EXPANSION ANCHORS FOR EMBEDDED ANCHORS SHOWN ON DRAWINGS WILL NOT BE PERMITTED WITHOUT APPROVAL BY THE CONTRACTING OFFICER'S REPRESENTATIVE.
8.10 PROVIDE SLEEVES FOR PIPE PENETRATIONS THROUGH THE FLOOR SLABS.
8.11 CONSTRUCTION JOINTS IN GRADE BEAMS MUST BE LOCATED WITHIN THE MIDDLE THIRD OF THE BEAM SPAN.

9 METAL DECKING
9.1 STEEL DECK MUST BE IN ACCORDANCE WITH STEEL DECK INSTITUTE (SDI) "DESIGN MANUAL FOR COMPOSITE DECKS, FORM DECKS, ROOF DECKS, AND CELLULAR METAL FLOOR DECK WITH ELECTRICAL DISTRIBUTION", LATEST EDITION, AND DIAPHRAGM DESIGN MANUAL, LATEST EDITION.
9.2 DO NOT SUSPEND PIPING, DUCTS, WORK UTILITIES OR OTHER LOADS INCLUDING SUSPENDED ACOUSTICAL CEILINGS WITH INTEGRALLY SUPPORTED LIGHT FIXTURES FROM ROOF AND FLOOR DECKING.
9.3 BEAR DECKING AT LEAST 2" AT SUPPORTS. LAP DECKING AT ENDS AT LEAST 2" AND CENTER LAPS OVER SUPPORTS. CENTER LAPS OVER ONE TOP CHORD ANGLE AT OPEN-WEB STEEL JOISTS.
9.4 WELD METAL DECKING IN COMPLIANCE WITH ANSI/AWS D1.3 USING A MINIMUM OF E60XX ELECTRODES. WELDERS MUST BE CERTIFIED AS REQUIRED BY THE GOVERNING CODE AUTHORITY.
9.5 ALL STEEL DECK MUST BE CONTINUOUS OVER AT LEAST TWO SPANS UNLESS NOTED OTHERWISE NOTED ON THE DRAWINGS.
9.6 WHERE NO SPECIFIC SUPPORT IS INDICATED, PROVIDE CONTINUOUS L3x3x1/4 OR EQUIVALENT BENT PLATE AS NECESSARY TO SUPPORT DECK EDGES.

10 OPEN WEB STEEL JOISTS
10.1 OPEN WEB JOISTS, JOIST GIRDERS AND BRIDGING MUST BE FABRICATED AND ERECTED IN ACCORDANCE WITH THE "STANDARD SPECIFICATIONS FOR OPEN WEB STEEL JOISTS AND JOIST GIRDERS" OF THE STEEL JOIST INSTITUTE (SJI), LATEST EDITION, AND MUST COMPLY THE STEEL JOIST INSTITUTE (SJI), LATEST EDITION.
10.2 JOIST MANUFACTURER MUST CHECK THE JOIST SYSTEM AND PROVIDE BRIDGING AS REQUIRED TO ADEQUATELY BRACE THE BOTTOM CHORDS AGAINST LATERAL MOVEMENT INCLUDING THE UPLIFT PRESSURE DUE TO WIND.
10.3 WELDING OF OPEN WEB JOISTS AND JOIST GIRDERS MUST COMPLY WITH AWS D1.1 STANDARDS.
10.4 BETWEEN PANEL POINTS OF STEEL JOISTS, THE BOTTOM CHORD MUST NOT SUPPORT OVER 50 LBS. VERTICAL LOAD WITHOUT ADEQUATE REINFORCING OF BOTTOM CHORD. NO VERTICAL LOAD MUST BE IMPOSED ON BRIDGING.

11 STRUCTURAL STEEL
11.1 CODES: AISC SPECIFICATION FOR THE DESIGN, FABRICATION AND ERECTION FOR STRUCTURAL STEEL FOR BUILDINGS; MANUAL OF STEEL CONSTRUCTION ASD (NINTH EDITION); STRUCTURAL WELDING CODE AWS D1.1 AND D1.4.
11.2 MATERIALS:
STRUCTURAL SHAPES:
WIDE FLANGE.................................... ASTM A-992 GRADE 50
WT... ASTM A-992 GRADE 50
CHANNELS... ASTM A-36 GRADE 36
ANGLES, PLATES AND RODS............ ASTM A-36 GRADE 36
HSS SHAPES (TUBE COLUMNS)........ ASTM A-500 GRADE B, Fy = 46 KSI
PIPE... ASTM A-53 TYPE E OR S GRADE B
NON-SHRINK GROUT........................ ASTM C-1107 7 KSI (NON-METALIC)
11.3 BOLTS FOR BEAM CONNECTIONS MUST BE ASTM A-325N WITH A MINIMUM DIAMETER OF 3/4", UNLESS OTHERWISE NOTED. BOLTED CONNECTIONS MUST BE BEARING TYPE CONNECTIONS, UNLESS NOTED AS SLIP CRITICAL. WASHERS MUST BE INSTALLED UNDER NUTS OF FASTENERS WHEN REQUIRED BY THE SPECIFICATION FOR STRUCTURAL JOINTS.
11.4 WELDERS MUST BE QUALIFIED IN ACCORDANCE WITH AND HAVE EVIDENCE OF PASSING THE AWS STANDARD QUALIFICATION TESTS.
11.5 WELDS MUST CONFORM TO LATEST AWS D1.1 STRUCTURAL WELDING CODE AND MUST BE AWS A5.1 OR A5.5, E70XX ELECTRODES.
11.6 WHERE WELD SIZES ARE NOT SPECIFICALLY INDICATED, PROVIDE, AS A MINIMUM 3/16" FILLET WELDS.
11.7 PROVIDE 3/16" CAP PLATE FOR OPEN ENDED TUBE STEEL COLUMNS AND BEAMS. PROVIDE 3/8" CAP PLATE FOR W COLUMNS.

12 GENERAL REQUIREMENTS
12.1 VERIFICATION: VERIFY ALL DIMENSIONS, ELEVATIONS AND SITE CONDITIONS BEFORE STARTING WORK. NOTIFY THE CONTRACTING OFFICER IMMEDIATELY OF ANY DISCREPANCIES.
12.2 SUBSTITUTIONS: PROVIDE MANUFACTURER'S ICBO REPORTS AND A LIST OF ALL PROPOSED SUBSTITUTIONS TO THE CONTRACTING OFFICER FOR REVIEW BEFORE FABRICATION.
12.3 PIPES, DUCTS, SLEEVES, CHASES, ETC.: MUST NOT BE PLACED IN SLABS, BEAMS, OR WALLS UNLESS SPECIFICALLY SHOWN OR NOTED NOR MUST ANY STRUCTURAL MEMBER BE CUT FOR PIPES, DUCTS, ETC., UNLESS SPECIFICALLY SHOWN. OBTAIN PRIOR WRITTEN APPROVAL FOR INSTALLATION OF ANY ADDITIONAL PIPES, DUCTS, ETC.
12.4 EXCAVATIONS: LOCATE AND PROTECT UNDERGROUND OR CONCEALED CONDUIT, PLUMBING OR OTHER UTILITIES WHERE NEW WORK IS BEING PERFORMED.
12.5 CONSTRUCTION LOADS: MATERIALS MUST BE EVENLY DISTRIBUTED IF PLACED ON FRAMED FLOORS OR ROOFS. LOADS MUST NOT EXCEED THE ALLOWABLE LOADING FOR THE SUPPORTING MEMBERS AND THEIR CONNECTIONS.
12.6 CONSTRUCTION METHODS AND PROJECT SAFETY: THE CONTRACT DRAWINGS AND SPECIFICATIONS REPRESENT THE FINISHED STRUCTURE AND DO NOT INDICATE METHODS, PROCEDURES OR SEQUENCE OF CONSTRUCTION. THE CONTRACTOR MUST TAKE NECESSARY PRECAUTIONS TO MAINTAIN AND INSURE THE INTEGRITY OF THE STRUCTURE DURING CONSTRUCTION. NEITHER THE OWNER, ARCHITECT NOR ENGINEER WILL ENFORCE SAFETY MEASURES OR REGULATIONS. THE CONTRACTOR MUST DESIGN, CONSTRUCT AND MAINTAIN ALL SAFETY DEVICES, INCLUDING SHORING AND BRACING, AND BE SOLELY RESPONSIBLE FOR CONFORMING TO ALL LOCAL, STATE AND FEDERAL SAFETY AND HEALTH STANDARDS, LAWS AND REGULATIONS.
12.7 PROVIDE TEMPORARY BRACING AS REQUIRED DURING THE ERECTION OF THE STRUCTURAL FRAME, ROOF AND FLOOR MEMBERS. BRACING MUST BE FULLY EFFECTIVE UNTIL ROOF AND FLOOR DEAD LOADS ARE IN PLACE.
12.8 PROCEED WITH BACK FILLING OPERATIONS IN A SAFE AND UNIFORM MANNER. SEE SPECIFICATIONS FOR REQUIREMENTS. CONCRETE GRADE WALLS MUST BE TEMPORARILY BRACED IF BACKFILL IS ONLY ON ONE SIDE OR BACK FILLED ON BOTH SIDES SIMULTANEOUSLY, WHERE REQUIRED, TO PREVENT DEFLECTION, CRACKING OR FAILURE OF CONCRETE GRADE WALLS.
12.9 DO NOT SCALE DRAWINGS.
12.10 IT IS THE CONTRACTORS RESPONSIBILITY TO COMPLY WITH ALL APPLICABLE ARS SAFETY REQUIREMENTS AND ALL OSHA REQUIREMENTS.

ABBREVIATIONS:

AFF	ABOVE FINISHED FLOOR
AISC	AMERICAN INSTITUTE OF STEEL CONSTRUCTION
APPROX.	APPROXIMATE
ARCH.	ARCHITECTURAL
@	AT
AHU	AIR HANDLING UNIT
AWS	AMERICAN WELDING SOCIETY
BC	BOTTOM CHORD
bf	FLANGE WIDTH
BFF	BELOW FINISHED FLOOR
BOT. OR B	BOTTOM OR BOTTOM MOST
BRG	BEARING
C&C	COMPONENT AND CLADDING
CJ OR CONST. JT.	CONSTRUCTION JOINT
CL	CENTERLINE
CFSS	COLD FORMED STEEL STUD
C.G.	CENTER OF GRAVITY
CLR.	CLEAR
CMU	CONCRETE MASONRY UNIT
COL.	COLUMN
COMP.	COMPOSITE
CONC.	CONCRETE
CONT.	CONTINUOUS
CRSI	CONCRETE REINFORCING STEEL INSTITUTE
D	DEPTH
DIA.	DIAMETER
db	BAR DIAMETER
DCJ	DOWELED CONTROL JOINT
DL.	DEAD LOAD
DO	DITTO
DWG.	DRAWING
EL.	ELEVATION
E.O.S.	EDGE OF SLAB
EQ.	EQUALLY
E.S.	EACH SIDE
E.W.	EACH WAY
EXP.	EXPANSION
FD	FLOOR DRAIN
FIN.	FINISHED, FINISH
F.F.	FINISHED FLOOR
GALV.	GALVANIZED
GR	GALVANIZED STEEL GRATING
HSS	HOLLOW STEEL SECTION
IP	POSITIVE MOMENT OF INERTIA
IN	NEGATIVE MOMENT OF INERTIA
JST	JOIST
JT.	JOINT
K	KIP (KILO POUND)
KSF	KIPS PER SQUARE FOOT
LL	LIVE LOAD
LLH	LONG LEG HORIZONTAL
LLV	LONG LEG VERTICAL
MAX.	MAXIMUM
MECH.	MECHANICAL
MFR.	MANUFACTURER
MIN.	MINIMUM
NO. OR #	NUMBER
O.C.	ON CENTER
OF	OUTSIDE FACE
PL	PLATE
PSF	POUNDS PER SQUARE FOOT
PSI	POUNDS PER SQUARE INCH
RP	RADIUS POINT
REQ'D	REQUIRED
SP	POSITIVE SECTION MODULUS
SN	NEGATIVE SECTION MODULUS
SCH	SCHEDULE
SJ	SAW JOINT
STIFF.	STIFFENER
T	TRUSS
t	THICKNESS
TC	TOP CHORD
T.O.C.	TOP OF COLUMN
T.O.S.	TOP OF STEEL
TYP.	TYPICAL
U.N.O.	UNLESS OTHERWISE NOTED
W/	WITH
WWF	WELDED WIRE FABRIC
W.P.	WORKING POINT

THOMAS H. TOLLISON REGISTERED PROFESSIONAL ENGINEER #10338 5/20/26 STATE OF MISSISSIPPI

THE Johnson & M Adams FIRM P.A.
ARCHITECTS/ENGINEERS • PLANNING • SURVEYING • MANAGEMENT
P.O. BOX 513, GREENWOOD, MISSISSIPPI – (662) 455-4943

NO.	DATE	BY	DESCRIPTION

REVISIONS

A–E FIRM	USDA
PROJECT MANAGER REH	EPM WN
DESIGNER STM	PPM XXX
CHECKED BY DRL	SAFETY & HEALTH CM
JOB # 5825	REAL PROPERTY JS

USDA Agricultural Research Service

USDA AGRICULTURAL RESEARCH SERVICE
SUGARCANE RESEARCH LABORATORY
HOUMA, LOUISIANA

STRUCTURAL GENERAL NOTES

PROJECT NO. XXX
DATE 05/20/2026

AGRICULTURAL RESEARCH SERVICE
FACILITIES ENGINEERING BRANCH
5106 SUNNYSIDE AVENUE
BELTSVILLE, MD 20705–5100

SHEET S-001
12 OF 176

J:\greenwood\2025 Jobs\5825 USDA Sugarcane Research Lab Houma LA\07 Working Folder\Struct\S001.dwg
May 19, 2026 – 3:06pm

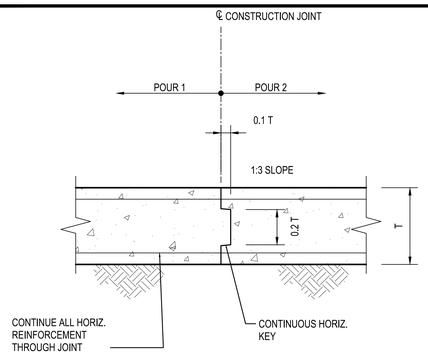

1 S-002 WALL CONSTRUCTION JOINT
SCALE: NTS

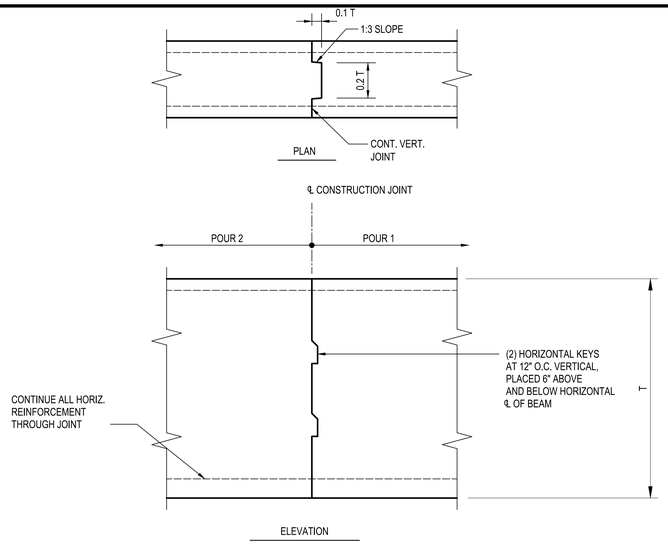

2 S-002 GRADE BEAM WALL CONSTRUCTION JOINT
SCALE: NTS

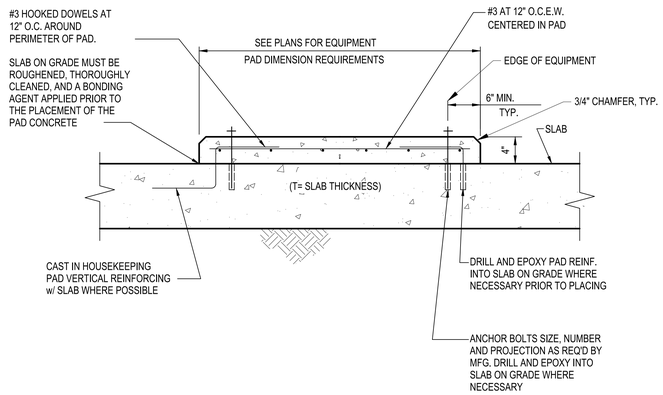

3 S-002 EQUIPMENT PAD
SCALE: NTS

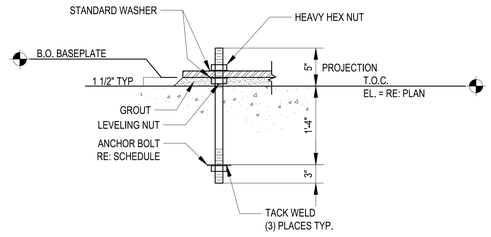

NOTE: FULLY THREADED RODS ARE NOT PERMITTED

4 S-002 ANCHOR BOLT DETAIL
SCALE: NTS

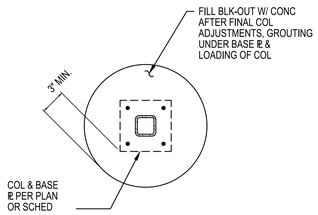

NOTE:
SIZE BLOCK OUT LARGER AS REQUIRED AT BRACED FRAME.

5 S-002 TYPICAL SLAB BLOCK-OUT AT COLUMNS
SCALE: NTS

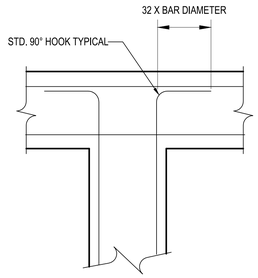

6 S-002 TYPICAL GRADE BEAM INTERSECTION REINFORCING
SCALE: NTS

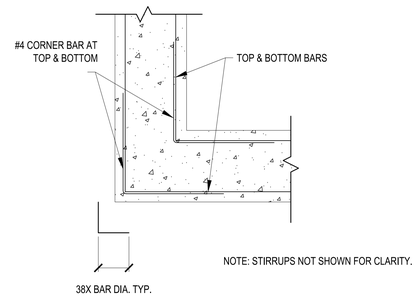

NOTE: STIRRUPS NOT SHOWN FOR CLARITY.

7 S-002 TYPICAL GRADE BEAM CORNER REINFORCING DETAIL
SCALE: NTS

J:\greenwood\2025 Jobs\5825 USDA Sugarcane Research Lab Houma LA\07 Working Folder\Struct\S002.dwg
May 19, 2026 - 3:06pm

THOMAS H. TOLLISON
REGISTERED PROFESSIONAL ENGINEER
#10338
5/20/26
STATE OF MISSISSIPPI

NO.	DATE	BY	DESCRIPTION

REVISIONS

Johnson & M Adams, PPM
ARCHITECTS/ENGINEERS • PLANNERS • SURVEYING • MANAGEMENT
P.O. BOX 513, GREENWOOD, MISSISSIPPI • (662) 455-4943

A-E FIRM	USDA
PROJECT MANAGER REH	EPM WN
DESIGNER STM	PPM XXX
CHECKED BY DRL	SAFETY & HEALTH CM
JOB # 5825	REAL PROPERTY JS

USDA Agricultural Research Service

USDA AGRICULTURAL RESEARCH SERVICE
SUGARCANE RESEARCH LABORATORY
HOUMA, LOUISIANA

TYPICAL CONCRETE DETAILS

PROJECT NO. XXX
DATE 05/20/2026

AGRICULTURAL RESEARCH SERVICE
FACILITIES ENGINEERING BRANCH
5106 SUNNYSIDE AVENUE
BELTSVILLE, MD 20705-5100

SHEET S-002
13 OF 176

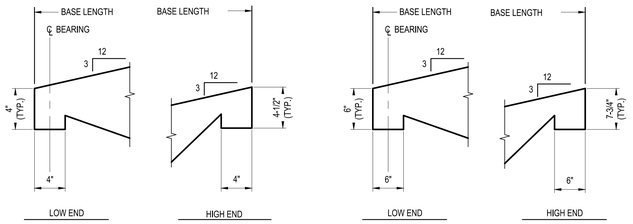

NOTES TO JOIST SUPPLIER

1. JOIST SEAT DEPTHS MUST BE AS SHOWN UNLESS NOTED OTHERWISE ON DRAWINGS ORE REQUIRED BY JOIST MFR.
2. EXTENED END ON JOIST MUST BE AS SHOWN ON DRAWINGS.

1 S-003 TYPICAL JOIST BEARING DETAILS
SCALE: NTS

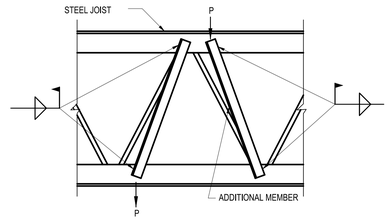

P = 58 LBS MAX. W/O ADDITIONAL MEMBER

COORDINATE ADDITIONAL MEMBER REQUIREMENTS WITH JOIST MANUFACTURER.

2 S-003 TYPICAL JOINT REINFORCING AT POINT LOADS
SCALE: NTS

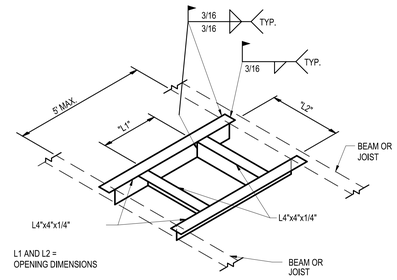

TYP. FRAMING FOR LARGE OPNGS.

3 S-003 TYPICAL SUPPORT AT ROOF OPENING
SCALE: NTS

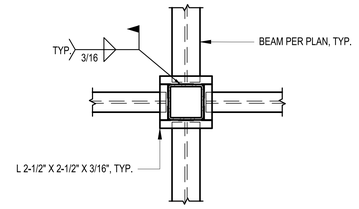

4 S-003 TYPICAL SUPPORT AT COLUMNS
SCALE: NTS

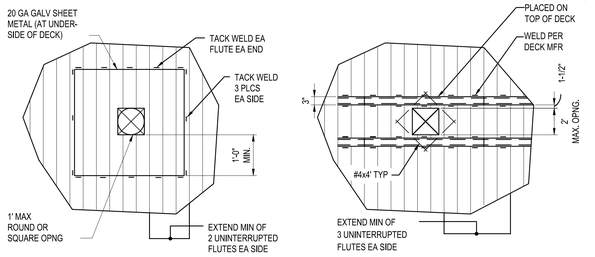

5 S-003 TYPICAL DECK OPENING DETAIL
SCALE: NTS

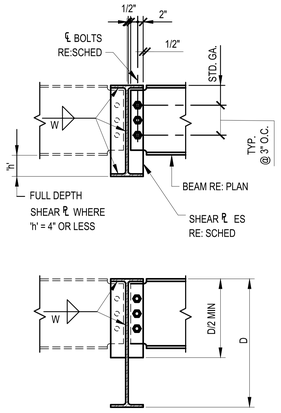

6 S-003 TYPICAL BEAM TO BEAM DETAIL
SCALE: NTS

BEAM CONNECTION SCHEDULE				
BEAM	BOLT DIA.	BOLTS	SHEAR PLATE	WELD W
W10	7/8"	2	1/4"	3/16"
W12	7/8"	3	1/4"	3/16"
W14	7/8"	3	5/16"	1/4"
W16	7/8"	4	5/16"	1/4"
W18	7/8"	4	3/8"	5/16"
W21	7/8"	5	3/8"	5/16"
W24	7/8"	6	3/8"	5/16"

NOTE:
ALL BOLTS MUST BE A325.

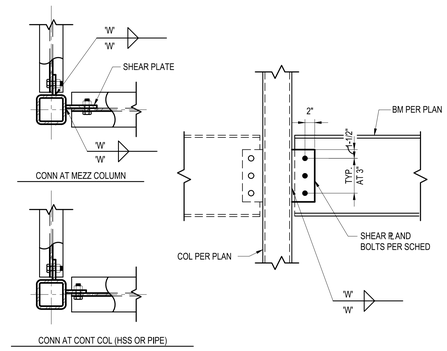

7 S-003 TYPICAL BEAM TO HSS COL DETAIL
SCALE: NTS

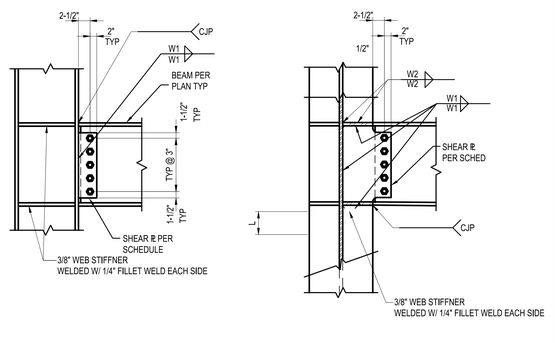

8 S-003 TYPICAL BEAM TO W COL DETAIL
SCALE: NTS

BEAM CONNECTION SCHEDULE						
BEAM	BOLT DIA	NO. BOLTS	STIFF. PLATE	SHEAR PLATE	WELD W1	WELD W2
W12	7/8"	3	3/8"	3/8"	1/4"	1/4"
W16	7/8"	4	3/8"	3/8"	1/4"	1/4"
W18	7/8"	5	3/8"	3/8"	5/16"	5/16"
W24	7/8"	7	3/8"	1/2"	5/16"	5/16"

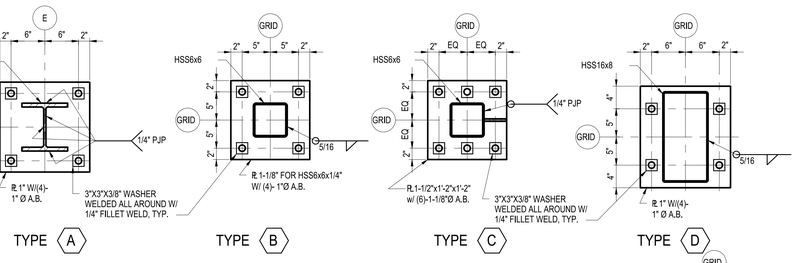

9 S-003 TYPICAL BASE PLATE DETAIL
SCALE: NTS

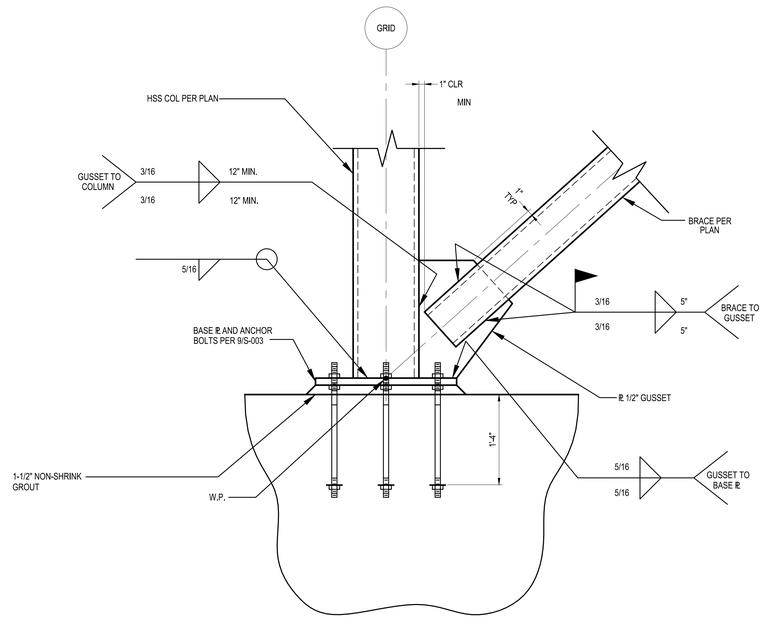

10 S-003 TYPICAL X-BRACE CONNECTION @ COLUMN BASE PLATE
SCALE: NTS

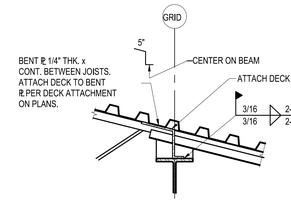

11 S-003 JOINT SHEAR CONNECTION
SCALE: NTS

JAMES H. TOMLINSON
REGISTERED PROFESSIONAL ENGINEER
#10338
5/20/26
STATE OF MISSISSIPPI

NO.	DATE	BY	DESCRIPTION

REVISIONS

Johnson ◦ M. Adams PSM P.A.
ARCHITECTS/ENGINEERS • PLANNING • SURVEYING • MANAGEMENT
P.O. BOX 313, GREENWOOD, MISSISSIPPI • (662) 455-4463

A–E FIRM	USDA
PROJECT MANAGER	EPM
REH	WN
DESIGNER	PPM
STM	XXX
CHECKED BY	SAFETY & HEALTH
DRL	CM
JOB #	REAL PROPERTY
5825	JS

USDA Agricultural Research Service

USDA AGRICULTURAL RESEARCH SERVICE
SUGARCANE RESEARCH LABORATORY
HOUMA, LOUISIANA

TYPICAL FRAMING DETAILS

PROJECT NO. XXX	AGRICULTURAL RESEARCH SERVICE FACILITIES ENGINEERING BRANCH 5106 SUNNYSIDE AVENUE BELTSVILLE, MD 20705–5100	SHEET S-003
DATE 05/20/2026		14 OF 176

J:\greenwood\2025 Jobs\5825 USDA Sugarcane Research Lab Houma LA\07 Working Folder\Struct\S003.dwg
May 19, 2026 - 3:06pm

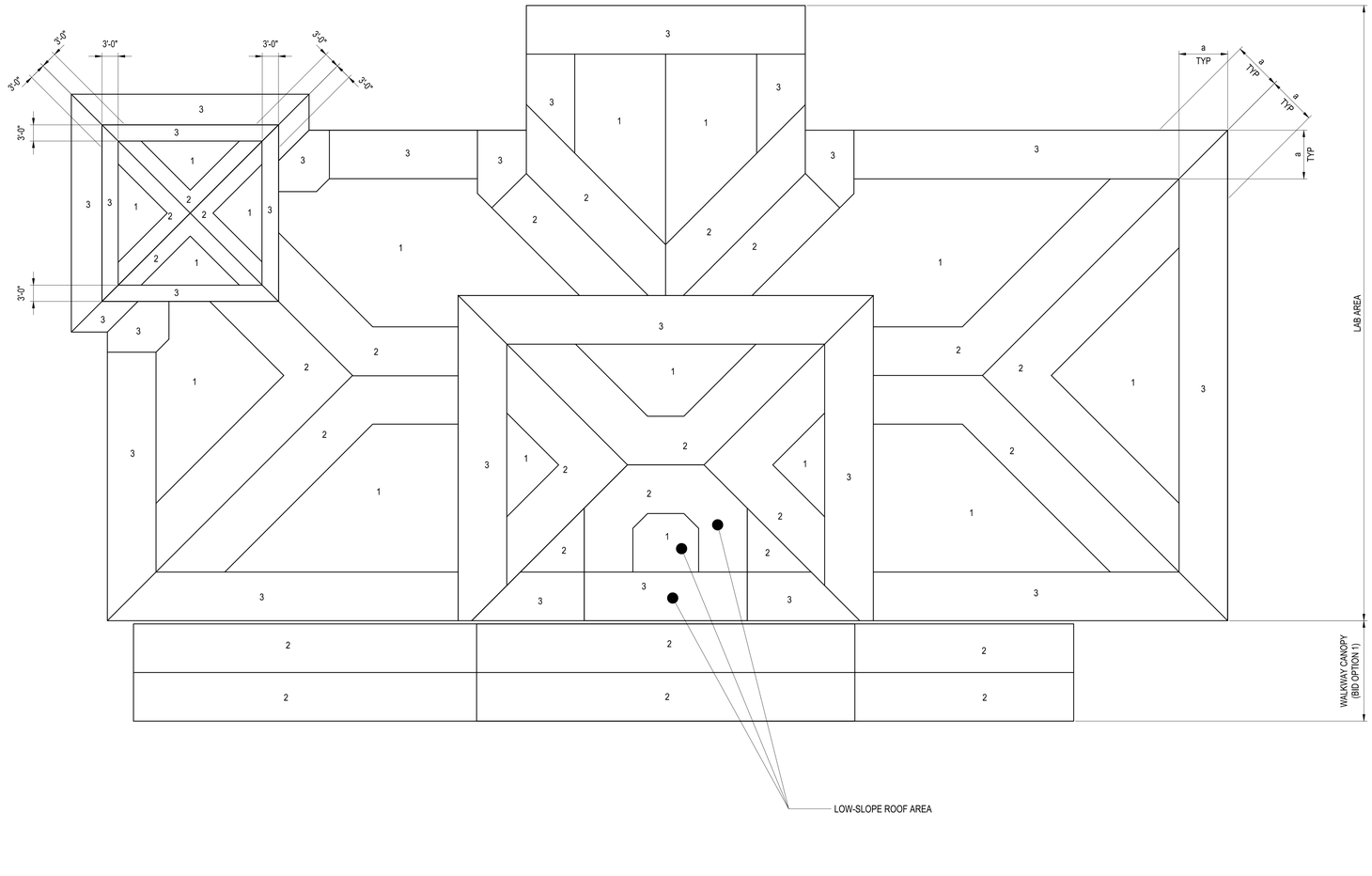

TABLE 1
DESIGN WIND PRESSURE COMPONENTS AND CLADDING (C & C)

NOTE: THE DESIGN WIND PRESSURES SHOWN BELOW ARE BASED UPON THE ULTIMATE DESIGN WIND SPEED OF 142 MPH. THE WIND PRESSURES SHOWN ARE TO BE USED WITH THE LOAD AND RESISTANCE FACTOR (LRFD) METHOD. ALLOWABLE STRENGTH DESIGN (ASD) PRESSURES SHOULD BE CALCULATED BASED UPON A NOMINAL VELOCITY OF 110 MPH.

SURFACE PRESSURE (psf)					
AREA	WIND ZONE	10sf	20sf	100sf	200sf
ROOF	NEGATIVE ZONE 1	-58.6	-58.6	-46.7	-46.7
ROOF	NEGATIVE ZONE 2	-102.1	-92.0	-68.6	-58.6
ROOF	NEGATIVE ZONE 3	-78.4	-71.9	-57.1	-50.7
ROOF	POSITIVE ALL ZONES	34.8	30.1	19.0	19.0
SURFACE PRESSURE (psf)					
AREA	WIND ZONE	10sf	100sf	200sf	500sf
WALLS	NEGATIVE ZONE 4	-50.7	-43.7	-41.6	-38.8
WALLS	NEGATIVE ZONE 5	-62.5	-48.5	-44.3	-38.8
WALLS	POSITIVE ZONE 4 & 5	46.7	39.7	37.6	34.8

NOTES:
1. DESIGN WIND PRESSURES INDICATED MUST BE USED IN THE DESIGN OF ALL COMPONENTS & CLADDING ELEMENTS COMPRISING THE BUILDING ENVELOPE.
2. POSITIVE PRESSURES ACT INWARD, TOWARD THE WIND SURFACE. NEGATIVE PRESSURES ACT OUTWARD, AWAY FROM THE WIND SURFACE.
3. LINEAR INTERPOLATION IS PERMITTED FOR INTERMEDIATE EFFECTIVE WIND AREAS.

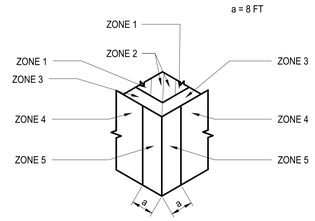

CORNER

1 S-004 WIND LOAD DIAGRAM
SCALE: 1/16" = 1'-0"

PLAN NORTH
TRUE NORTH

THOMAS H. TOLLISON
REGISTERED PROFESSIONAL ENGINEER
#10338
5/20/26
STATE OF MISSISSIPPI

NO.	DATE	BY	DESCRIPTION

REVISIONS

Johnson & M Adams, PC
ARCHITECTS/ENGINEERS • PLANNERS • SURVEYING • MANAGEMENT
P.O. BOX 513, GREENWOOD, MISSISSIPPI – (662) 455-4943

USDA Agricultural Research Service

USDA AGRICULTURAL RESEARCH SERVICE
SUGARCANE RESEARCH LABORATORY
HOUMA, LOUISIANA

WIND LOAD DIAGRAM

A–E FIRM	USDA
PROJECT MANAGER REH	EPM WN
DESIGNER STM	PPM XXX
CHECKED BY DRL	SAFETY & HEALTH CM
JOB # 5825	REAL PROPERTY JS

PROJECT NO. XXX
DATE 05/20/2026

AGRICULTURAL RESEARCH SERVICE
FACILITIES ENGINEERING BRANCH
5106 SUNNYSIDE AVENUE
BELTSVILLE, MD 20705–5100

SHEET S-004
15 OF 176

J:\greenwood\2025 Jobs\5825 USDA Sugarcane Research Lab Houma LA\07 Working Folder\Struct\S004.dwg
May 19, 2026 – 3:06pm

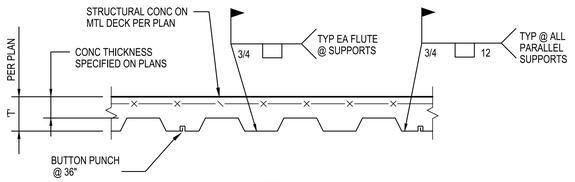

NOTES:

1. MINIMUM DECK END SUPPORT MUST BE 2"
2. ALL FIELD APPLIED 3/4" DIA PLUG WELDS TO BE 1/2" EFFECTIVE
3. OMIT PLUG WELDS WHERE THEY COINCIDE W/ SHEAR STUDS
4. RE: PLAN FOR DECK PROPERTIES.

1 S-005 METAL DECK PROFILE (COMPOSITE)

SCALE: NTS

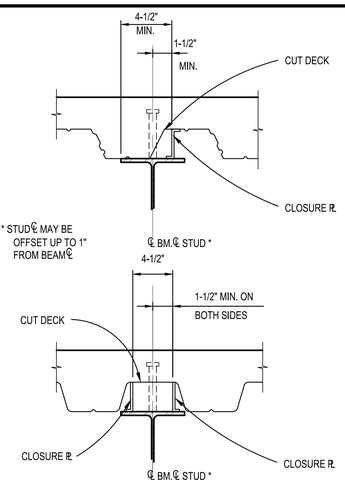

2 S-005 DECK PARALLEL TO BEAM - OFFSET FLUTE

SCALE: NTS

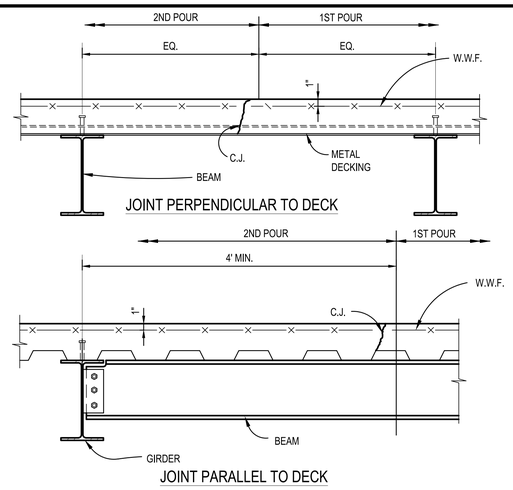

3 S-005 TYPICAL CONSTRUCTION JOINT FOR SLAB

SCALE: NTS

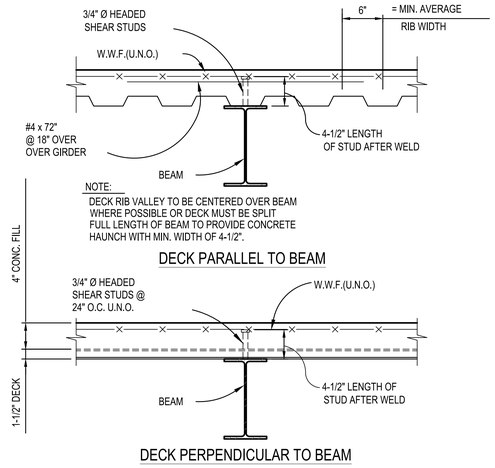

4 S-005 COMPOSITE BEAM TO COMPOSITE SLAB

SCALE: NTS

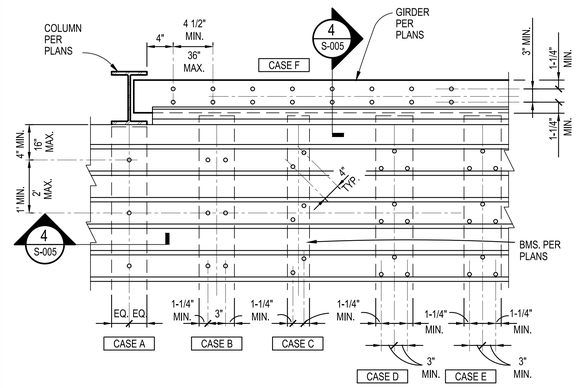

NOTE:

1. SEE 4/S-005 FOR DECK SUPPORT AT COLUMNS NOT SHOWN HERE.
2. THE TERM "AVAILABLE LENGTH OF BEAM" AS USED MUST BE DEFINED AS THAT LENGTH OF BEAM OR GIRDER WHERE STUDS WILL BE ENGULFED IN CONCRETE FLOORING.
3. INSTALL STUDS (H.A.S.) IN LOW FLUTES OF DECK ONLY. AT BEAM ENDS, INSTALL STUDS IN FIRST AVAILABLE LOW FLUTE. SPACE NUMBER OF REQ'D. STUDS EVENLY ALONG AVAILABLE LENGTH OF BEAM AS PER OUTLINE BELOW.

CASE A: SINGLE STUD ROWS: TYPICAL COMPOSITE BEAM. NO MINIMUM BEAM FLANGE WIDTH.

CASE B: DOUBLE STUD ROWS: TWO STUDS PER FLUTE SPACED AS SHOWN. 5-1/2" MIN. BEAM FLANGE WIDTH. ADD SECOND STUD IN FLUTE WHEN REQUIRED NUMBER OF STUDS EXCEEDS NUMBER OF AVAILABLE LOW FLUTES. SECOND STUDS MUST BE SPACED EVENLY ALONG AVAILABLE LENGTH OF BEAM.

CASE C: DOUBLE STUD ROWS: TWO STUDS PER FLUTE STAGGERED AS SHOWN. USE THIS SCHEME ONLY WHEN NUMBER OF REQUIRED STUDS PROHIBITS CASE 'A' & BEAM FLANGE WIDTH IS LESS THAN 5-1/2".

CASE D: TRIPLE STUD ROWS: THREE STUDS PER FLUTE SPACED AS SHOWN. MINIMUM 8-1/2" BEAM FLANGE WIDTH. USE THIS SCHEME ONLY WHEN NUMBER OF REQUIRED STUDS PROHIBITS CASE "B".

CASE E: TRIPLE STUDS ROWS: THREE STUDS PER FLUTE STAGGERED AS SHOWN. USE THIS SCHEME ONLY WHEN NUMBER OR REQUIRED STUDS PROHIBIT CASE "B" AND BEAM FLANGE WIDTH IS LESS THAN 8-1/2".

CASE F: GIRDERS: USE SINGLE ROW OF STUDS TYPICALLY. USE DOUBLE ROW OF STUDS ONLY WHEN REQUIRED. AT GIRDER ENDS, INSTALL FIRST STUD 4" FROM COLUMN FLANGE. WHERE GIRDER FLANGE WIDTH IS LESS THAN 5-1/2", STAGGER STUDS SIMILAR TO CASE 'C' ABOVE.

5 S-005 HEADED ANCHOR STUD (HAS) PLACEMENT DETAIL

SCALE: NTS

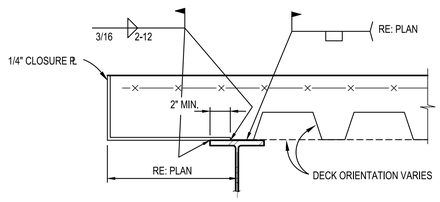

6 S-005 EXTERIOR WALL SLAB EDGE (NON-BEARING)

SCALE: NTS

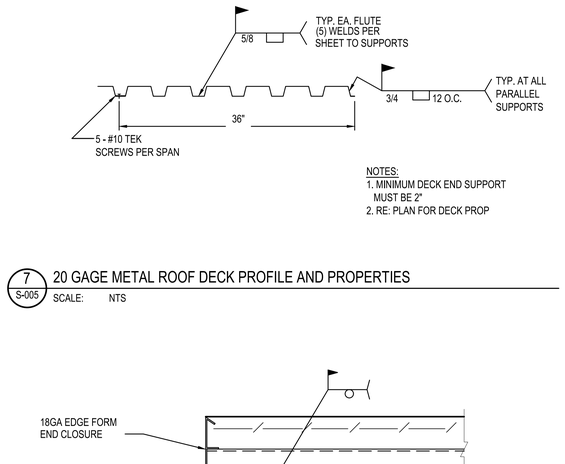

NOTES:
1. MINIMUM DECK END SUPPORT MUST BE 2"
2. RE: PLAN FOR DECK PROP

7 S-005 20 GAGE METAL ROOF DECK PROFILE AND PROPERTIES

SCALE: NTS

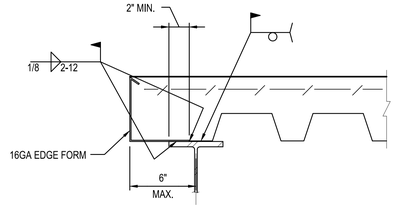

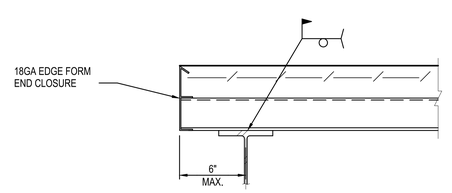

8 S-005 DETAIL AT INTERIOR SLAB EDGE

SCALE: NTS

JAMES H. TOLLISON
REGISTERED PROFESSIONAL
ENGINEER
#10338
STATE OF MISSISSIPPI

NO.	DATE	BY	DESCRIPTION

REVISIONS

Johnson ‹ M. Adams PPM P.A.
ARCHITECTS/ENGINEERS • PLANNERS • SURVEYING • MANAGEMENT
P.O. BOX 313, GREENWOOD, MISSISSIPPI • (662) 455-4843

USDA Agricultural Research Service

USDA AGRICULTURAL RESEARCH SERVICE
SUGARCANE RESEARCH LABORATORY
HOUMA, LOUISIANA

TYPICAL METAL DECK DETAILS

A-E FIRM	USDA
PROJECT MANAGER	REH
EPM	WN
DESIGNER	STM
PPM	XXX
CHECKED BY	DRL
SAFETY & HEALTH	CM
JOB #	5825
REAL PROPERTY	JS
PROJECT NO.	XXX
DATE	05/20/2026

AGRICULTURAL RESEARCH SERVICE
FACILITIES ENGINEERING BRANCH
5106 SUNNYSIDE AVENUE
BELTSVILLE, MD 20705-5100

SHEET S-005
16 OF 176

J:\greenwood\2025 Jobs\5825 USDA Sugarcane Research Lab Houma LA\07 Working Folder\Struct\S005.dwg
May 19, 2026 - 2:26pm

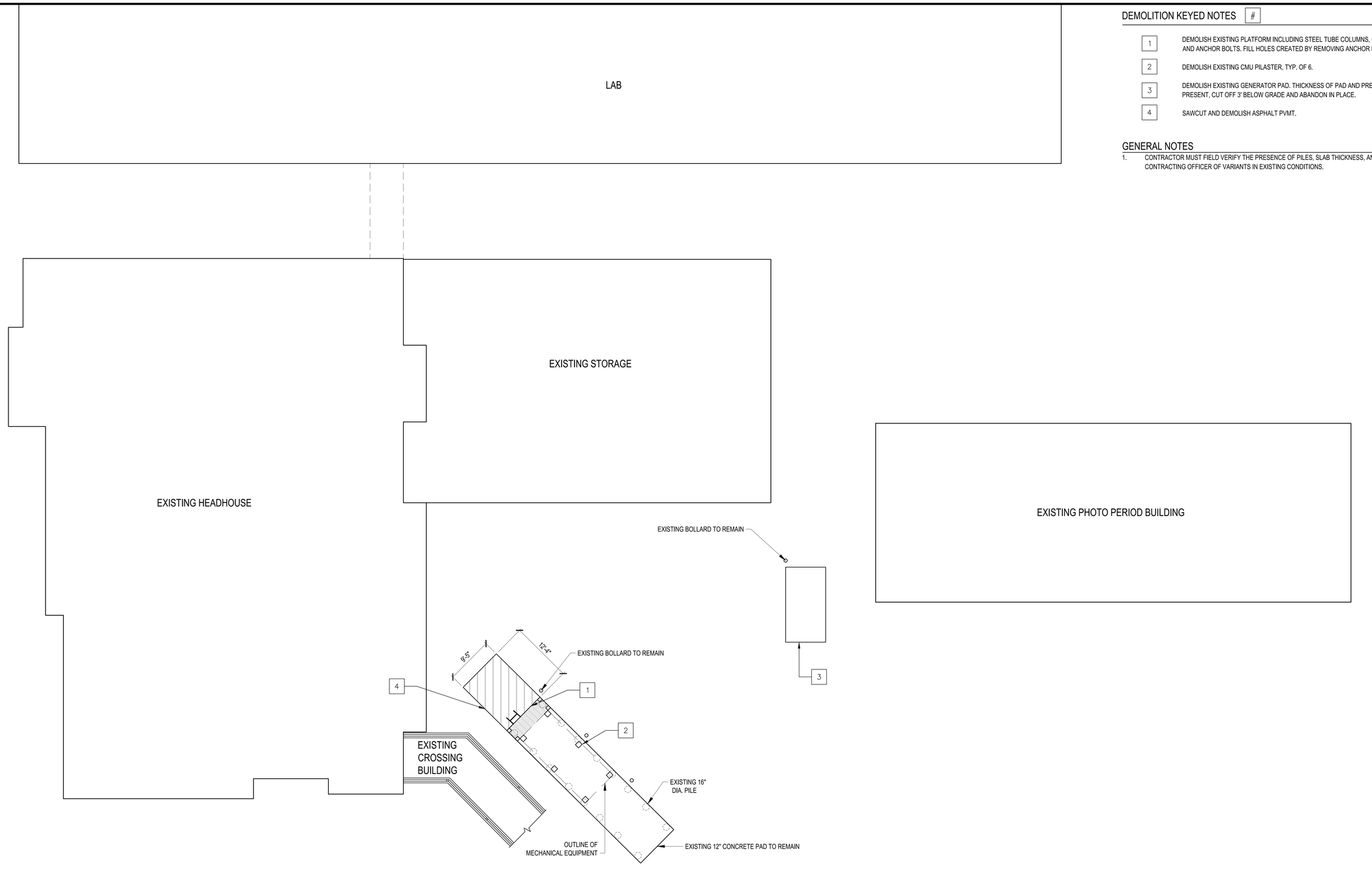

DEMOLITION KEYED NOTES

1. DEMOLISH EXISTING PLATFORM INCLUDING STEEL TUBE COLUMNS, CHANNELS, HANDRAILS, LADDER, GRATING AND ANCHOR BOLTS. FILL HOLES CREATED BY REMOVING ANCHOR BOLTS WITH EPOXY GROUT.
2. DEMOLISH EXISTING CMU PILASTER, TYP. OF 6.
3. DEMOLISH EXISTING GENERATOR PAD. THICKNESS OF PAD AND PRESENCE OF PILES IS UNKNOWN. IF PILES ARE PRESENT, CUT OFF 3' BELOW GRADE AND ABANDON IN PLACE.
4. SAWCUT AND DEMOLISH ASPHALT PVMT.

GENERAL NOTES

1. CONTRACTOR MUST FIELD VERIFY THE PRESENCE OF PILES, SLAB THICKNESS, AND SLAB DIMENSIONS. NOTIFY CONTRACTING OFFICER OF VARIANTS IN EXISTING CONDITIONS.

1 SD101 STRUCTURAL DEMOLITION PLAN

SCALE: 1/8" = 1'-0"

PLAN NORTH / TRUE NORTH

0 4' 8' 16' 24'

SCALE: 1/8"= 1'-0"

THOMAS H. TOLLISON — REGISTERED PROFESSIONAL ENGINEER #19338 — STATE OF MISSISSIPPI

NO.	DATE	BY	DESCRIPTION
			REVISIONS

Johnson, Mirmiran & Thompson, Inc. / M. Adams, PPM — ARCHITECTS/ENGINEERS • PLANNERS • SURVEYING • MANAGEMENT — P.O. BOX 313, GREENWOOD, MISSISSIPPI • (662) 455-4443

USDA Agricultural Research Service

USDA AGRICULTURAL RESEARCH SERVICE
SUGARCANE RESEARCH LABORATORY
HOUMA, LOUISIANA

STRUCTURAL DEMOLITION PLAN

A-E FIRM	USDA
PROJECT MANAGER	REH
EPM	WN
DESIGNER	STM
PPM	XXX
CHECKED BY	DRL
SAFETY & HEALTH	CM
JOB #	5825
REAL PROPERTY	JS
PROJECT NO.	XXX
DATE	05/20/2026

AGRICULTURAL RESEARCH SERVICE
FACILITIES ENGINEERING BRANCH
5106 SUNNYSIDE AVENUE
BELTSVILLE, MD 20705-5100

SHEET SD101
17 OF 176

J:\greenwood\2025 Jobs\5825 USDA Sugarcane Research Lab Houma LA\07 Working Folder\Struct\SD101.dwg
May 19, 2026 - 2:09pm

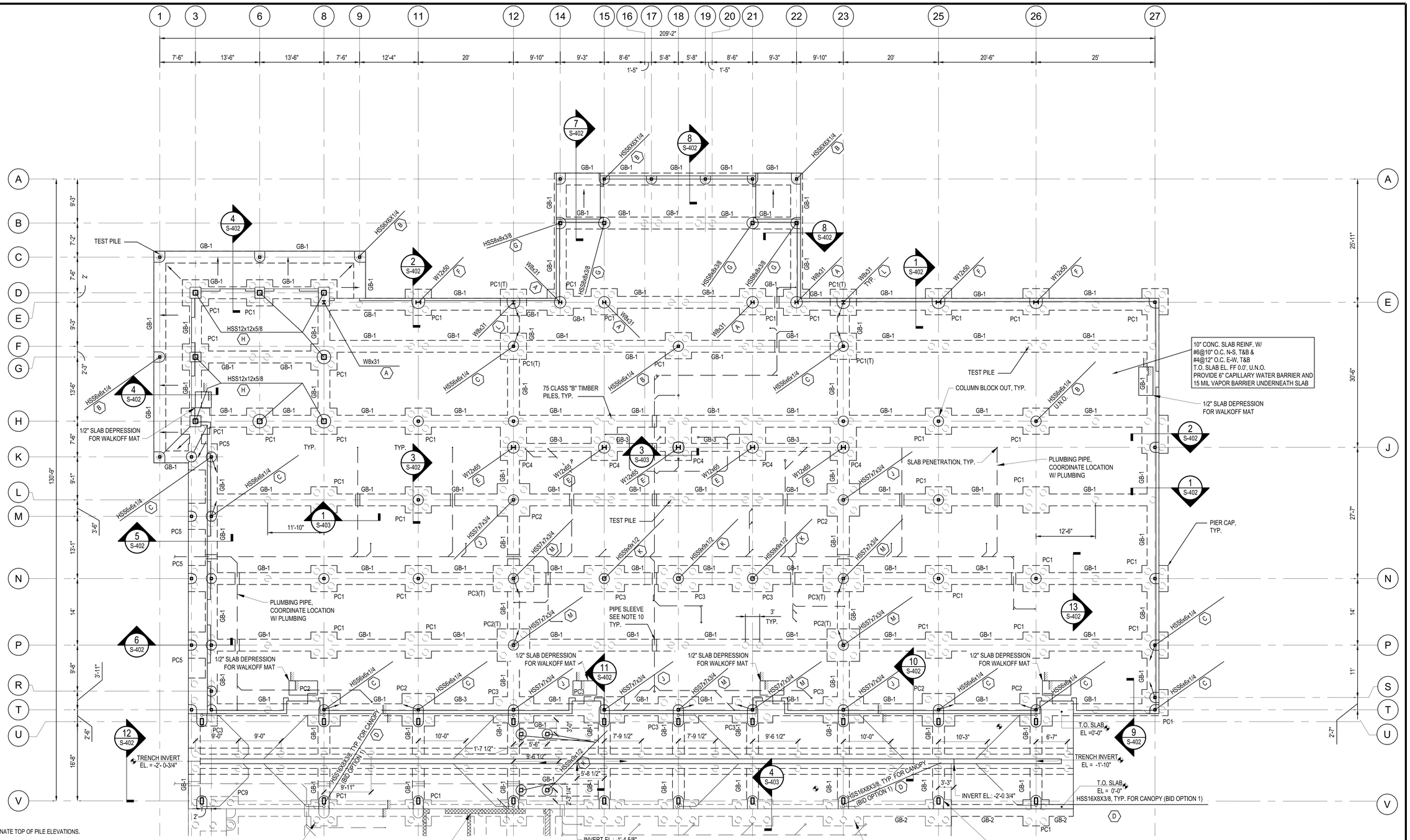

1 S-101 FOUNDATION AND FIRST FLOOR SLAB PLAN

SCALE: 1/8" = 1'-0"

PLAN NOTES:

1. CONTRACTOR MUST VERIFY AND COORDINATE TOP OF PILE ELEVATIONS.
2. TOP OF CONCRETE SLAB ELEVATION 0'-0" = CIVIL ELEVATION 9.39',
3. COORDINATE WITH ELECTRICAL MECHANICAL, PLUMBING AND ARCHITECTURAL DRAWINGS FOR SLAB PENETRATIONS AND DEPRESSIONS.
4. CONTRACTOR MUST BE RESPONSIBLE FOR ALL TEMPORARY SHORING REQUIRED FOR SUPPORT OF EXISTING STRUCTURES.
5. GB-1 INDICATES GRADE BEAM TYPE, SEE SCHEDULE SHEET S-401
6. FOR TYPICAL GRADE BEAM DETAILS, SEE SHEET S-002.
7. FOR BOTTOM OF BASE PLATE ELEVATIONS, SEE SHEETS S-301, S-302 AND S-303.
8. PC1 INDICATES PILE CAP TYPE SEE SHEET S-401.
9. (T) INDICATES TENSION PILE, SEE 3/S-401.
10. 10" PIPE SLEEVE, SEE DETAIL 1/S-403 OR 2/S-403. REFER TO MECHANICAL DRAWINGS FOR LOCATIONS.
11. CONTRACTOR MUST MINIMIZE VIBRATIONS WHEN DRIVING PILES NEXT TO EXISTING BUILDING.

LEGEND

COLUMN SIZE (A)

INDICATES BASE PLATE TYPE AND ANCHOR BOLT REQUIREMENTS. INFORMATION SHOWN ON DWG. S-004.

INDICATES BRACED FRAME LOCATION.

SCALE: 1/8"= 1'-0"

JOHNSON, THOMAS, MOORE & ADAMS PSM — ARCHITECTS/ENGINEERS • PLANNING • SURVEYING • MANAGEMENT — P.O. BOX 313, GREENWOOD, MISSISSIPPI • (662) 455-4443

NO.	DATE	BY	DESCRIPTION
			REVISIONS

USDA Agricultural Research Service

USDA AGRICULTURAL RESEARCH SERVICE
SUGARCANE RESEARCH LABORATORY
HOUMA, LOUISIANA

FOUNDATION AND SLAB PLAN
LAB/OFFICE

A-E FIRM	USDA
PROJECT MANAGER	REH
EPM	WN
DESIGNER	STM
PPM	XXX
CHECKED BY	DRL
SAFETY & HEALTH	CM
JOB #	5825
REAL PROPERTY	JS

PROJECT NO. XXX
DATE 05/20/2026

AGRICULTURAL RESEARCH SERVICE
FACILITIES ENGINEERING BRANCH
5106 SUNNYSIDE AVENUE
BELTSVILLE, MD 20705-5100

SHEET S-101
18 OF 176

THOMAS H. TOMLINSON — REGISTERED PROFESSIONAL ENGINEER — #10338 — STATE OF MISSISSIPPI

J:\greenwood\2025 Jobs\5825 USDA Sugarcane Research Lab Houma LA\07 Working Folder\Struct\S101.dwg
May 19, 2026 - 2:06pm

GENERAL NOTES

1. SEE S-203 FOR ENLARGED EQUIPMENT PLATFORM FRAMING PLAN.

KEYED NOTES

1. PROVIDE 12" THICK CONCRETE SLAB.
2. PROVIDE 75' CLASS B TIMBER PILE, TYP.
3. PROVIDE APPROXIMATELY 200 SF OF ASPHALT PVMT REPAIR FROM TO ASPHALT PAVING DAMAGED DURING THE DEMOLITION PROCESS.

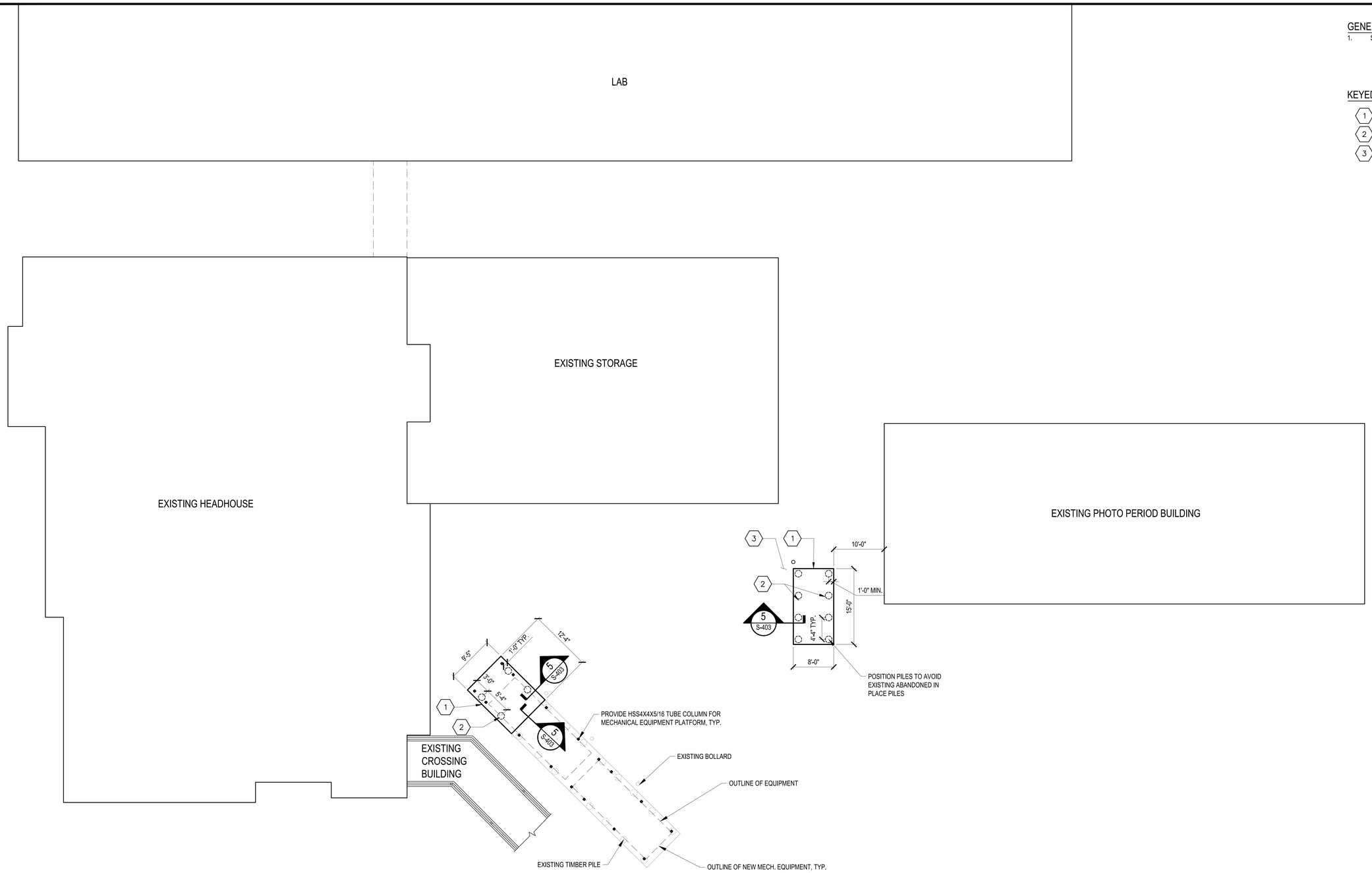

1 S-102 STRUCTURAL EQUIPMENT PAD PLAN
SCALE: 1/8" = 1'-0"

PLAN NORTH TRUE NORTH

0 4' 8' 16' 24'
SCALE: 1/8"= 1'-0"

THOMAS H. TOLLISON REGISTERED PROFESSIONAL ENGINEER #10338 STATE OF MISSISSIPPI 5/20/26

NO.	DATE	BY	DESCRIPTION

REVISIONS

Johnson & M Adams, PPM
ARCHITECTS/ENGINEERS • PLANNERS • SURVEYING • MANAGEMENT
P.O. BOX 513, GREENWOOD, MISSISSIPPI – (662) 455-4943

A–E FIRM	USDA
PROJECT MANAGER REH	EPM WN
DESIGNER STM	PPM XXX
CHECKED BY DRL	SAFETY & HEALTH CM
JOB # 5825	REAL PROPERTY JS

USDA Agricultural Research Service

USDA AGRICULTURAL RESEARCH SERVICE
SUGARCANE RESEARCH LABORATORY
HOUMA, LOUISIANA

STRUCTURAL EQUIPMENT PAD PLAN

PROJECT NO. XXX
DATE 05/20/2026

AGRICULTURAL RESEARCH SERVICE
FACILITIES ENGINEERING BRANCH
5106 SUNNYSIDE AVENUE
BELTSVILLE, MD 20705–5100

SHEET S-102
19 OF 176

J:\greenwood\2025 Jobs\5825 USDA Sugarcane Research Lab Houma LA\07 Working Folder\Struct\S102.dwg
May 19, 2026 – 3:06pm

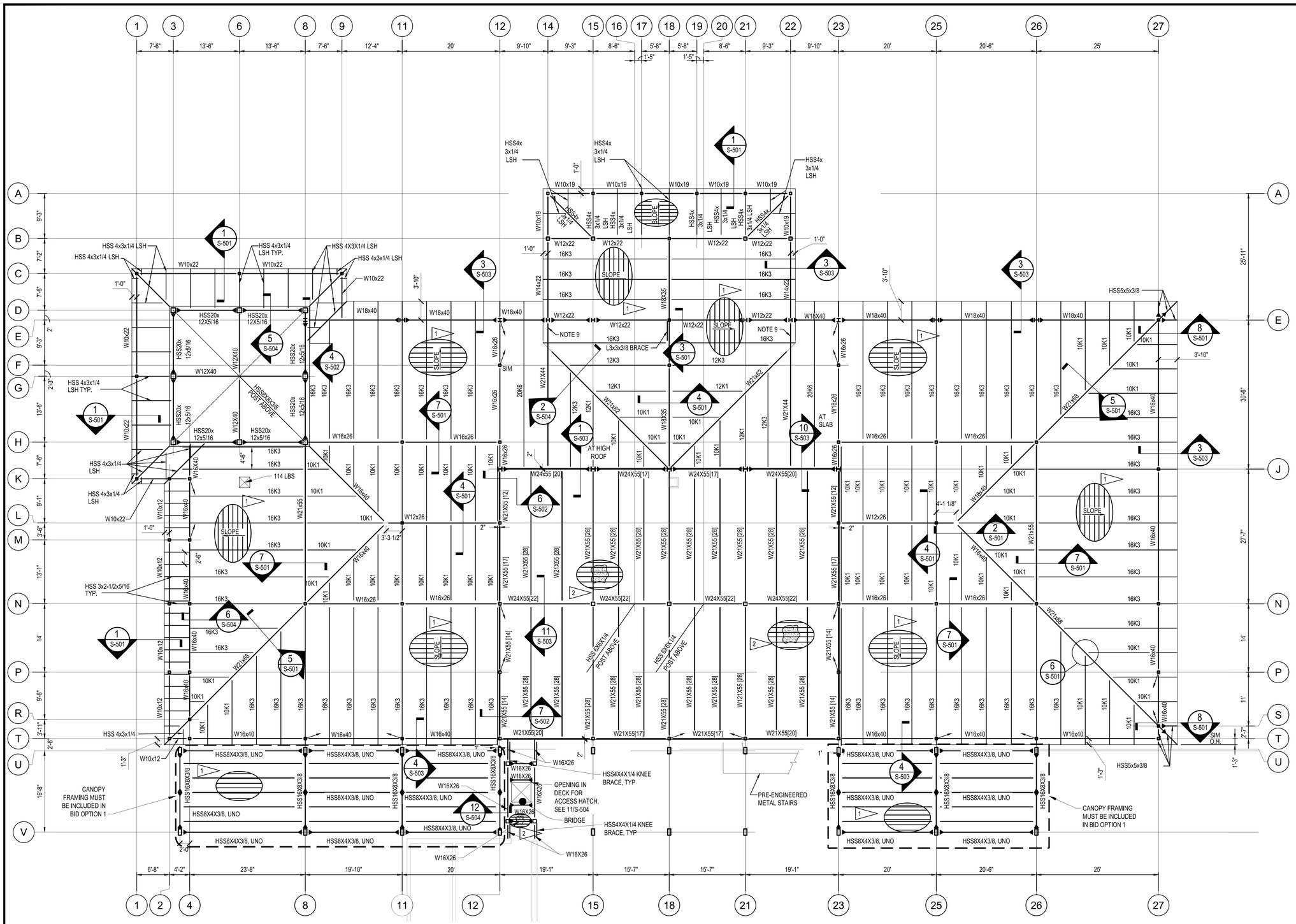

FLAGGED NOTES

1. 1-1/2" x 18 GA. TYPE B WIDE RIB STEEL ROOF DECK.
   REQUIRED DECK PROPERTIES:
   - PITCH = 6
   - Se- = 0.315 in^3/ft
   - Se+ = 0.302 in^3/ft
   - Fy = 60 ksi

   FASTENERS:
   - SUPPORTS: 36/5 PATTERN, 5/8" PUDDLE WELDED
   - SIDELAPS: (5) #10 TEK SCREWS PER SPAN

2. TYPICAL COMPOSITE FLOOR SLAB ON DECK MUST BE 1-1/2" x 20 GA. COMPOSITE METAL DECK WITH 4-1/2" CONCRETE TOPPING, 6" TOTAL THICKNESS, U.N.O. REINFORCE SLAB WITH 6" x 6"-W1.7xW1.7 U.N.O.
   FINISH FLOOR ELEVATION = 16'-0" U.N.O.
   REQUIRED DECK PROPERTIES:
   - PITCH = 6
   - Se- = 0.224 in^3/ft
   - Se+ = 0.229 in^3/ft
   - Fy = 50 ksi
   - F'c = 4000 psi

   SUPPORT FASTENERS: 36/4 PATTERN, 5/8" PUDDLE WELDED.
   SIDELAP FASTENERS: 4 WELDS PER SPAN

LEGEND

- W12x26 [28] — INDICATES NUMBER OF 3/4" Ø x 3-1/2" HEADED STUDS. EQUALLY SPACED.
- INDICATES MOMENT CONNECTION.
- INDICATES BRACED FRAME LOCATION.
- INDICATES OPEN AREAS.
- STEEL DECK
- CONCRETE SLAB ON STEEL DECK

GENERAL NOTES

1. SEE SHEETS S-301, S-302, AND S-303 FOR FRAMING ELEVATIONS AND BEAM SIZES NOT SHOWN ON THIS SHEET.
2. JOISTS ARE TO BE EQUALLY SPACED U.N.O.
3. SEE SHEET S-003 FOR TYPICAL ROOF OPENING FRAMING. COORDINATE LOCATIONS AND SIZES WITH ARCHITECTURAL AND MECHANICAL DRAWINGS.
4. FOR TYPICAL BEAM TO COLUMN AND BEAM TO BEAM CONNECTIONS, SEE SHEET S-003.
5. ROOF STEEL JOISTS AND BRIDGING MUST BE DESIGNED FOR WIND UPLIFT PER THE WIND LOAD DIAGRAM ON SHEET S-004.
6. JOIST MANUFACTURER MUST PROVIDE BRIDGING AS REQUIRED BY SJI TO ADEQUATELY BRACE JOISTS.
7. SLOPED ROOF STEEL JOISTS MUST HAVE A BEARING SEAT DEPTH AS INDICATED IN DETAIL 1 ON SHEET S-003.
8. JOIST TOP CHORD EXTENSIONS MUST BE TYPE R5.
9. PROVIDE BUILT-UP COLD FORMED STEEL SLOPED KNEE WALL. ATTACH ROOF DECK TO BUILT UP KNEE WALL PER FLAGGED NOTE 1 ABOVE.

1 S-201 SECOND FLOOR AND LOW ROOF FRAMING PLAN
SCALE: 1/8" = 1'-0"

PLAN NORTH / TRUE NORTH

0 4' 8' 16' 24'
SCALE: 1/8"= 1'-0"

THOMAS H. TOLLISON — 32766 — REGISTERED PROFESSIONAL ENGINEER — STATE OF MISSISSIPPI — 5/20/26

NO.	DATE	BY	DESCRIPTION
			REVISIONS

Johnson, Mott, Adams, PLLC — ARCHITECTS/ENGINEERS • PLANNERS • SURVEYING • MANAGEMENT — P.O. BOX 513, GREENWOOD, MISSISSIPPI • (662) 455-4643

A–E FIRM	USDA
PROJECT MANAGER	REH
EPM	WN
DESIGNER	STM
PPM	XXX
CHECKED BY	DRL
SAFETY & HEALTH	CM
JOB #	5825
REAL PROPERTY	JS

USDA Agricultural Research Service

USDA AGRICULTURAL RESEARCH SERVICE
SUGARCANE RESEARCH LABORATORY
HOUMA, LOUISIANA

SECOND FLOOR AND LOW ROOF FRAMING PLAN LAB/OFFICE

PROJECT NO. XXX
DATE 05/20/2026

AGRICULTURAL RESEARCH SERVICE
FACILITIES ENGINEERING BRANCH
5106 SUNNYSIDE AVENUE
BELTSVILLE, MD 20705–5100

SHEET S-201

J:\Jgreenwood\2025 Jobs\5825 USDA Sugarcane Research Lab Houma LA\07 Working Folder\Struct\S201.dwg
May 19, 2026 - 3:06pm

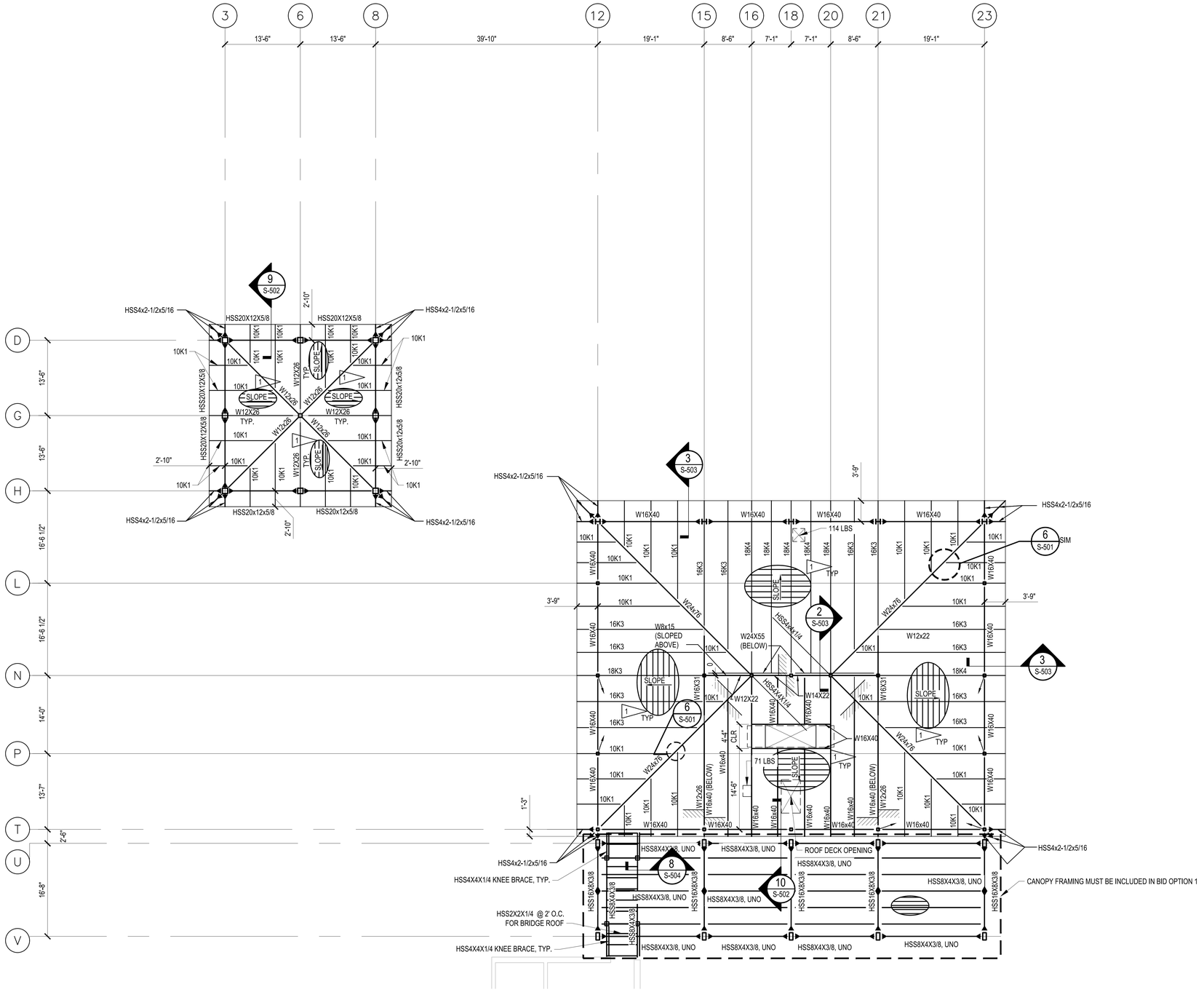

1 S-202 HIGH ROOF FRAMING PLAN

SCALE: 1/8" = 1'-0"

PLAN NORTH

TRUE NORTH

0 4' 8' 16' 24'

SCALE: 1/8"= 1'-0"

FLAGGED NOTES

1 1-1/2" x 18 GA. TYPE B WIDE RIB STEEL ROOF DECK.
REQUIRED DECK PROPERTIES:

PITCH = 6
Se- = 0.315 in^3/ft
Se+ = 0.302 in^3/ft
Fy = 60 ksi

FASTENERS:
SUPPORTS: 36/5 PATTERN, 5/8" PUDDLE WELDED
SIDELAPS: (5) #10 TEK SCREWS PER SPAN

LEGEND

INDICATES MOMENT CONNECTION.

INDICATES BRACED FRAME LOCATION.

INDICATES STEPPED SURFACE

ROOF DECK

GENERAL NOTES

1. SEE SHEETS S-301, S-302, S-303 FOR FRAMING ELEVATIONS AND BEAM SIZES NOT SHOWN ON THIS SHEET.
2. JOISTS ARE TO BE EQUALLY SPACED U.N.O.
3. SEE SHEET S-003 FOR TYPICAL ROOF OPENING FRAMING. COORDINATE LOCATIONS AND SIZES WITH ARCHITECTURAL AND MECHANICAL DRAWINGS.
4. FOR TYPICAL BEAM TO COLUMN AND BEAM TO BEAM CONNECTIONS, SEE SHEET S-003.
5. ROOF STEEL JOISTS AND BRIDGING MUST BE DESIGNED FOR WIND UPLIFT PER THE WIND LOAD DIAGRAM ON SHEET S-004.
6. JOIST MANUFACTURER MUST PROVIDE BRIDGING AS REQUIRED BY SJI TO ADEQUATELY BRACE JOISTS.
7. SLOPED ROOF STEEL JOISTS MUST HAVE A BEARING SEAT DEPTH AS INDICATED IN DETAIL 1 ON SHEET S-003, UNLESS SHOWN OTHERWISE.
8. JOIST TOP CHORD EXTENSIONS MUST BE TYPE R5.
9. FOR ROOF SLOPES, REFER TO ARCHITECTURAL ROOF PLAN.

THOMAS H. TOLLISON 10338 REGISTERED PROFESSIONAL ENGINEER STATE OF MISSISSIPPI

Johnson * M. Adams, PA
ARCHITECTS/ENGINEERS * PLANNERS * SURVEYING * MANAGEMENT
P.O. BOX 513, GREENWOOD, MISSISSIPPI * (662) 455-4443

NO.	DATE	BY	DESCRIPTION

REVISIONS

USDA Agricultural Research Service

USDA AGRICULTURAL RESEARCH SERVICE
SUGARCANE RESEARCH LABORATORY
HOUMA, LOUISIANA

HIGH ROOF FRAMING PLAN LAB/OFFICE

A-E FIRM	USDA
PROJECT MANAGER	REH
EPM	WN
DESIGNER	STM
PPM	XXX
CHECKED BY	DRL
SAFETY & HEALTH	CM
JOB #	5825
REAL PROPERTY	JS

PROJECT NO. XXX	AGRICULTURAL RESEARCH SERVICE FACILITIES ENGINEERING BRANCH 5106 SUNNYSIDE AVENUE BELTSVILLE, MD 20705-5100	SHEET S-202
DATE 05/20/2026		21 OF 176

J:\Greenwood\2025 Jobs\5825 USDA Sugarcane Research Lab Houma LA\07 Working Folder\Struct\S202.dwg
May 19, 2026 - 2:06pm

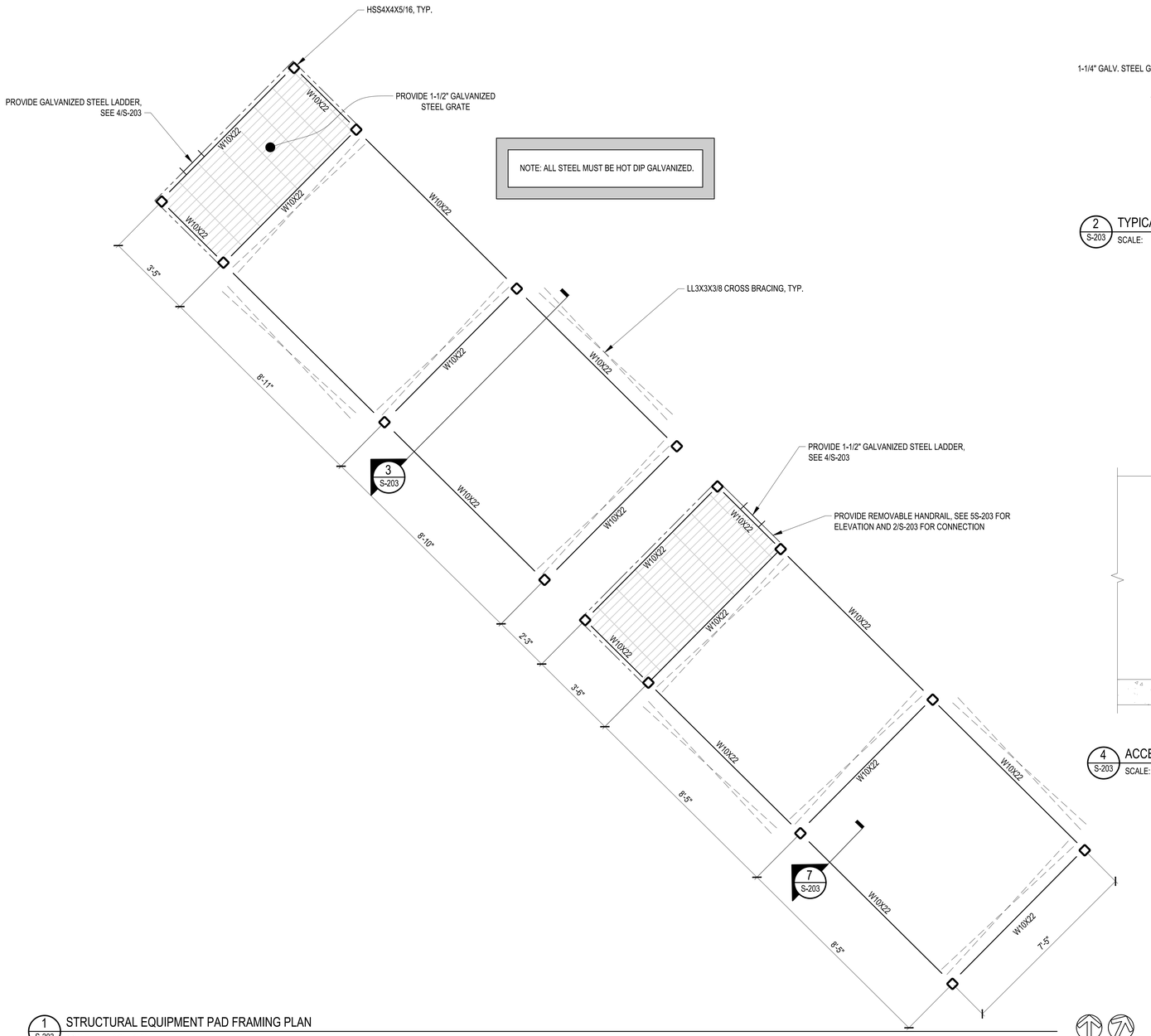

1 S-203 STRUCTURAL EQUIPMENT PAD FRAMING PLAN
SCALE: 1/2" = 1'-0"

PLAN NORTH / TRUE NORTH

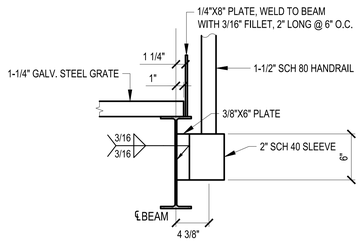

2 S-203 TYPICAL HANDRAIL ATTACHMENT
SCALE: 1-1/2" = 1'-0"

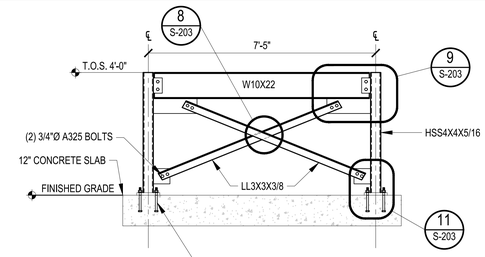

3 S-203 SECTION
SCALE: 1/2" = 1'-0"

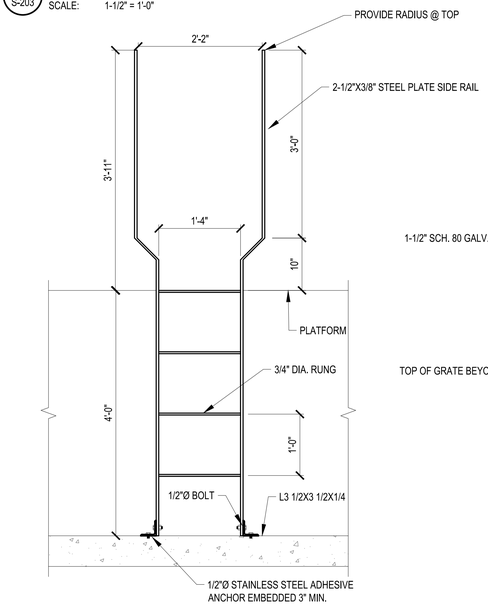

4 S-203 ACCESS LADDER
SCALE: NTS

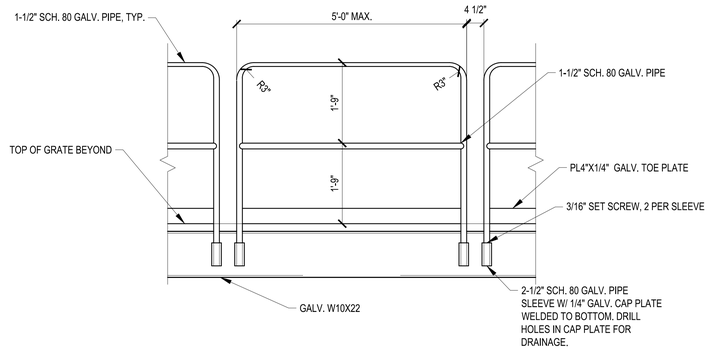

5 S-203 REMOVABLE HANDRAIL
SCALE: NTS

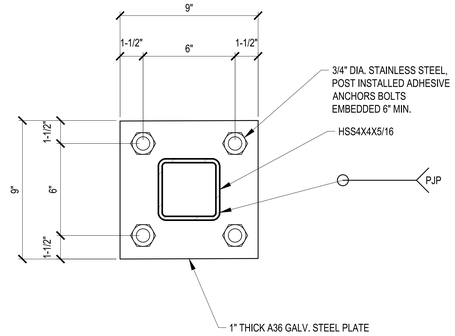

6 S-203 BASE PLATE DETAIL
SCALE: 3" = 1'-0"

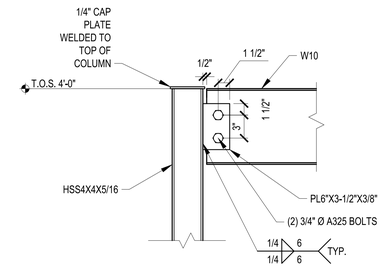

7 S-203 STANDARD BEAM TO COLUMN CONNECTION
SCALE: 1-1/2" = 1'-0"

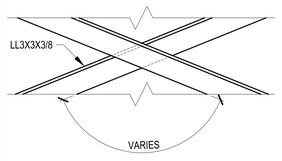

8 S-203 X-BRACING CROSS SECTION
SCALE: 1-1/2" = 1'-0"

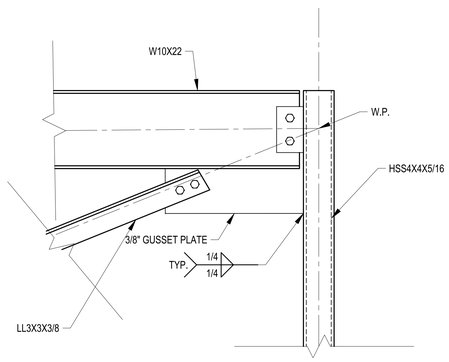

9 S-203 X-BRACING CONNECTION @ TOP
SCALE: 1-1/2" = 1'-0"

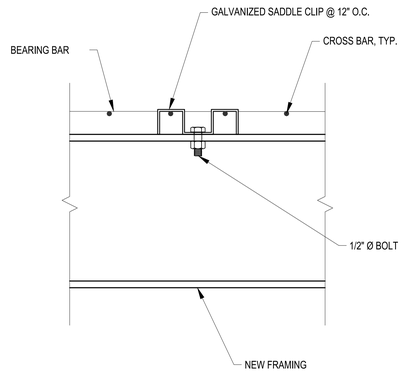

10 S-203 GRATE CONNECTION DETAIL
SCALE: 3" = 1'-0"

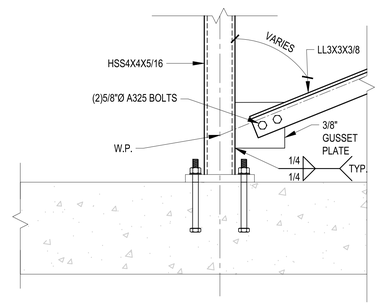

11 S-203 X-BRACING CONNECTION @ BOTTOM
SCALE: 1-1/2" = 1'-0"

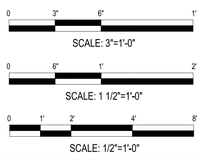

THOMAS H. TOLLEY JR. REGISTERED PROFESSIONAL ENGINEER #10338 5/20/26 STATE OF MISSISSIPPI

NO.	DATE	BY	DESCRIPTION
			REVISIONS

Johnson • M. Adams, PPC
ARCHITECTS/ENGINEERS • PLANNERS • SURVEYING • MANAGEMENT
P.O. BOX 513, GREENWOOD, MISSISSIPPI • (662) 455-4943

USDA Agricultural Research Service

USDA AGRICULTURAL RESEARCH SERVICE
SUGARCANE RESEARCH LABORATORY
HOUMA, LOUISIANA

MECHANICAL PLATFORM FRAMING

A–E FIRM	USDA
PROJECT MANAGER REH	EPM WN
DESIGNER STM	PPM XXX
CHECKED BY DRL	SAFETY & HEALTH CM
JOB # 5825	REAL PROPERTY JS

PROJECT NO.	AGRICULTURAL RESEARCH SERVICE FACILITIES ENGINEERING BRANCH 5106 SUNNYSIDE AVENUE BELTSVILLE, MD 20705–5100	SHEET
XXX		S-203
DATE 05/20/2026		22 OF 176

J:\greenwood\2025 Jobs\5025 USDA Sugarcane Research Lab Houma LA\07 Working Folder\Struct\S203.dwg
May 19, 2026 - 3:06pm

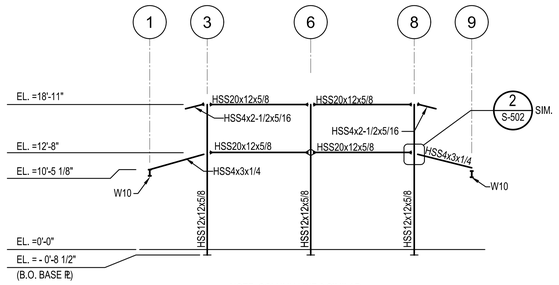

NOTE: COLUMN LINE 3 SIMILAR

1 S-301 FRAMING ELEVATIONS ALONG GRID D

SCALE: 1/8" = 1'-0"

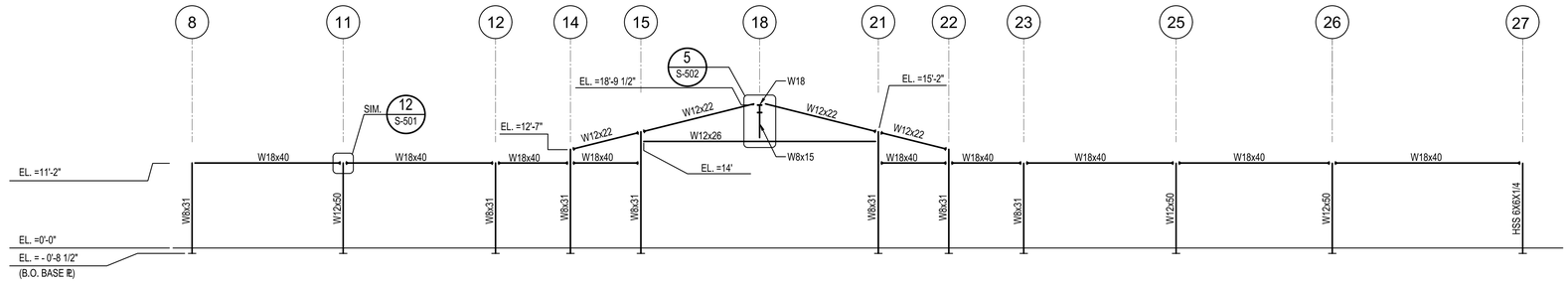

2 S-301 FRAMING ELEVATIONS ALONG GRID E

SCALE: 1/8" = 1'-0"

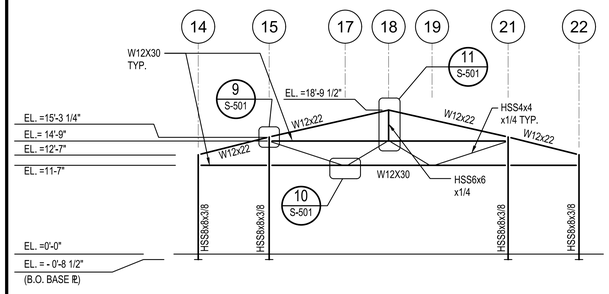

3 S-301 FRAMING ELEVATIONS ALONG GRID B

SCALE: 1/8" = 1'-0"

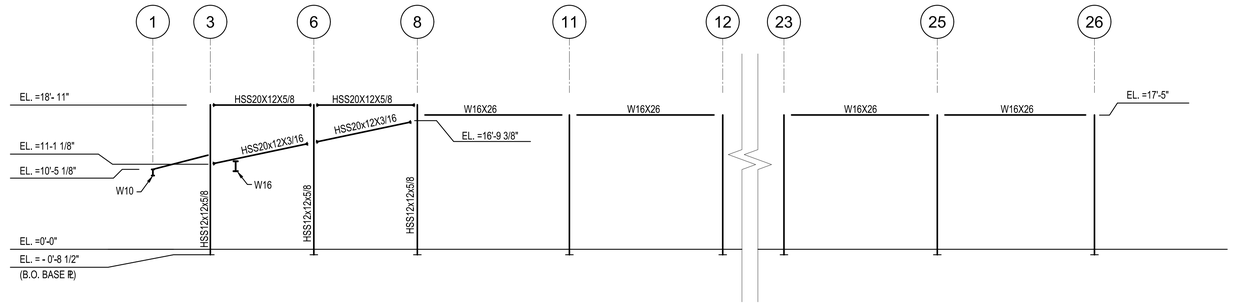

4 S-301 FRAMING ELEVATIONS ALONG GRID H

SCALE: 1/8" = 1'-0"

NOTES:

1. ELEVATION SHOWN ARE FOR TOP OF STEEL ELEVATIONS, UNLESS NOTED OTHERWISE.
2. ELEVATIONS FOR SLOPED MEMBER INDICATE WORKING POINT ELEVATIONS FOR TOP OF STEEL AT GRID LINES.

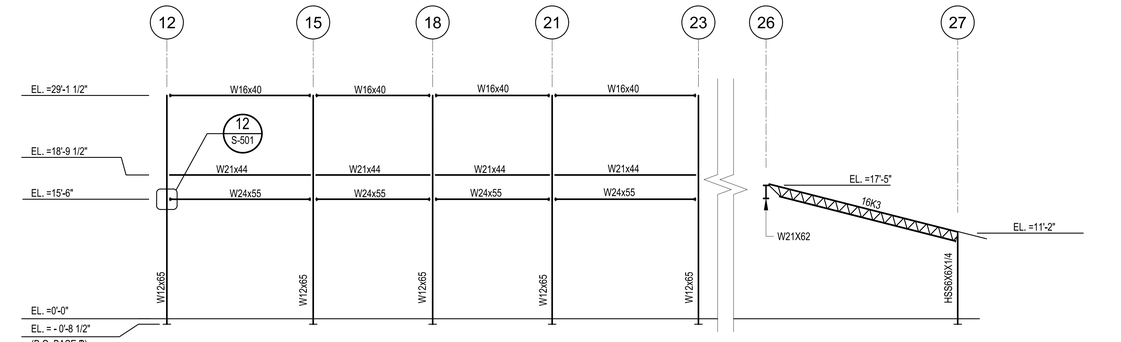

5 S-301 FRAMING ELEVATIONS ALONG GRID J

SCALE: 1/8" = 1'-0"

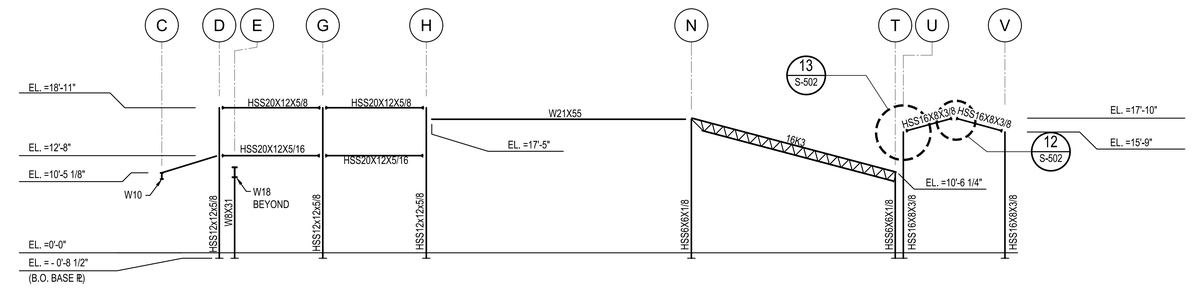

6 S-301 FRAMING ELEVATIONS ALONG GRID 8

SCALE: 1/8" = 1'-0"

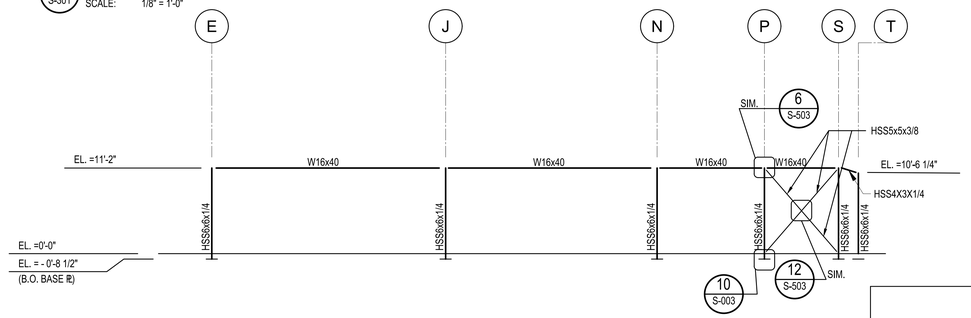

8 S-301 FRAMING ELEVATIONS ALONG GRID 27

SCALE: 1/8" = 1'-0"

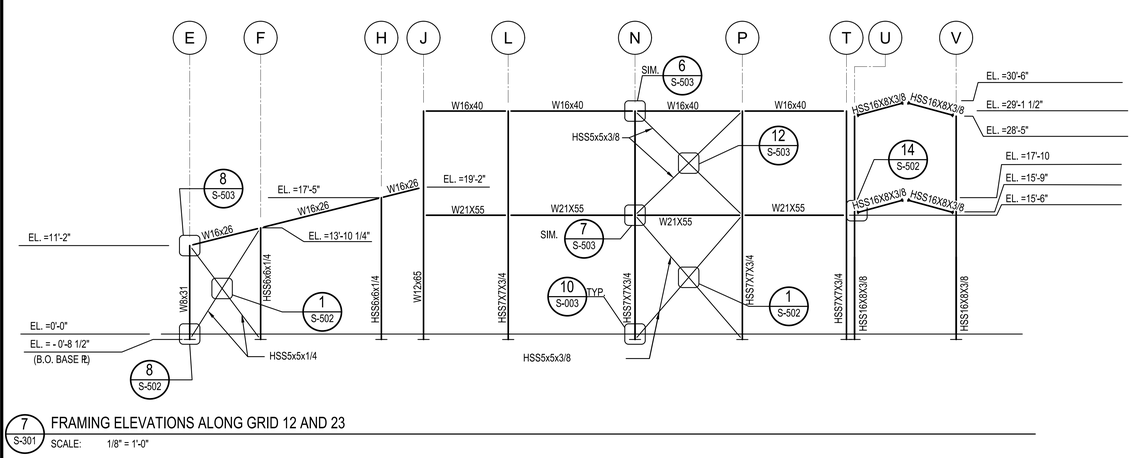

7 S-301 FRAMING ELEVATIONS ALONG GRID 12 AND 23

SCALE: 1/8" = 1'-0"

J:\greenwood\2025 Jobs\5825 USDA Sugarcane Research Lab Houma LA\07 Working Folder\Struct\S301.dwg
May 19, 2026 - 2:06pm

JAMES H. TOLAR, JR.
REGISTERED PROFESSIONAL ENGINEER
#10338
STATE OF MISSISSIPPI

NO.	DATE	BY	DESCRIPTION

REVISIONS

Jones Johnson • M. Adams PPM
ARCHITECTS/ENGINEERS • PLANNING • SURVEYING • MANAGEMENT
P.O. BOX 313, GREENWOOD, MISSISSIPPI • (662) 455-4443

USDA Agricultural Research Service

USDA AGRICULTURAL RESEARCH SERVICE
SUGARCANE RESEARCH LABORATORY
HOUMA, LOUISIANA

FRAMING ELEVATIONS LAB/OFFICE

A–E FIRM	USDA
PROJECT MANAGER	EPM
REH	WN
DESIGNER	PPM
STM	XXX
CHECKED BY	SAFETY & HEALTH
DRL	CM
JOB #	REAL PROPERTY
5825	JS

PROJECT NO.	XXX
DATE	05/20/2026

AGRICULTURAL RESEARCH SERVICE
FACILITIES ENGINEERING BRANCH
5106 SUNNYSIDE AVENUE
BELTSVILLE, MD 20705–5100

SHEET S-301

23 OF 176

0 4' 8' 16' 24'

SCALE: 1/8"= 1'-0"

NOTES:

1. ELEVATION SHOWN ARE FOR TOP OF STEEL ELEVATIONS, UNLESS NOTED OTHERWISE.
2. ELEVATIONS FOR SLOPED MEMBER INDICATE WORKING POINT ELEVATIONS FOR TOP OF STEEL AT GRID LINES.

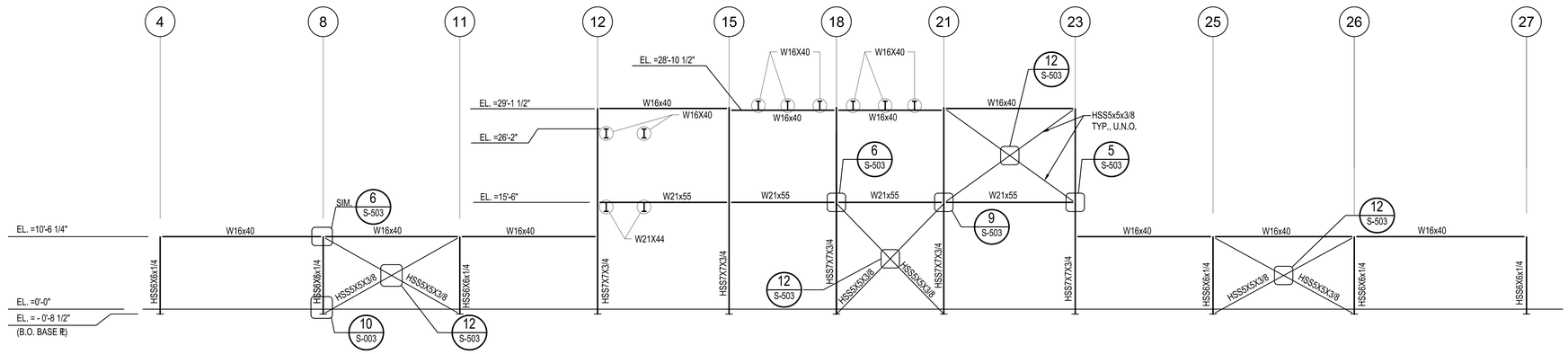

1 S-302 FRAMING ELEVATIONS ALONG GRID T

SCALE: 1/8" = 1'-0"

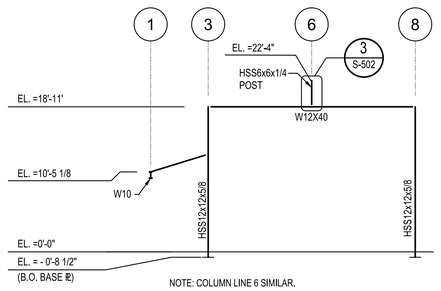

NOTE: COLUMN LINE 6 SIMILAR.

2 S-302 FRAMING ELEVATIONS ALONG GRID G

SCALE: 1/8" = 1'-0"

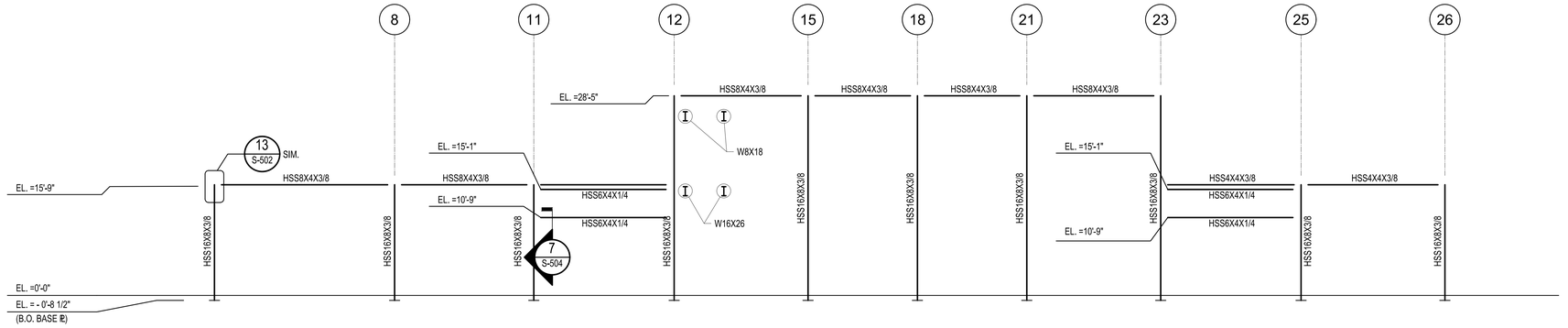

3 S-302 FRAMING ELEVATIONS ALONG GRID U

SCALE: 1/8" = 1'-0"

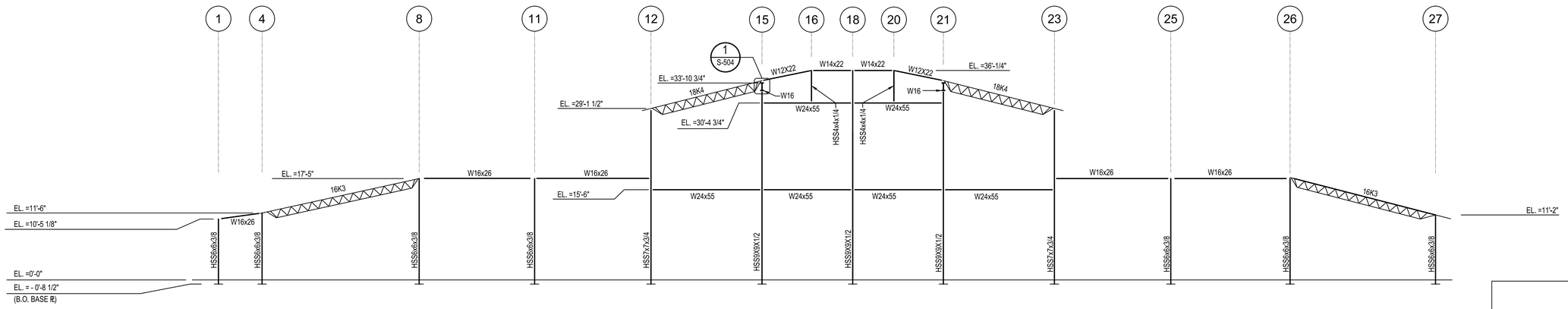

4 S-302 FRAMING ELEVATIONS ALONG GRID N

SCALE: 1/8" = 1'-0"

0 4' 8' 16' 24'

SCALE: 1/8"= 1'-0"

THOMAS H. TOLISANO — REGISTERED PROFESSIONAL ENGINEER #19338 — STATE OF MISSISSIPPI

NO.	DATE	BY	DESCRIPTION
			REVISIONS

Johnson, Mirmiran & Thompson, Inc. / M. Adams, PPM
ARCHITECTS/ENGINEERS • PLANNERS • SURVEYING • MANAGEMENT
P.O. BOX 313, GREENWOOD, MISSISSIPPI • (662) 455-4443

USDA Agricultural Research Service

USDA AGRICULTURAL RESEARCH SERVICE
SUGARCANE RESEARCH LABORATORY
HOUMA, LOUISIANA

FRAMING ELEVATIONS LAB/OFFICE AND HEADHOUSE

A-E FIRM	USDA
PROJECT MANAGER	REH
EPM	WN
DESIGNER	STM
PPM	XXX
CHECKED BY	DRL
SAFETY & HEALTH	CM
JOB #	5825
REAL PROPERTY	JS
PROJECT NO.	XXX
DATE	05/20/2026

AGRICULTURAL RESEARCH SERVICE
FACILITIES ENGINEERING BRANCH
5106 SUNNYSIDE AVENUE
BELTSVILLE, MD 20705-5100

SHEET S-302

J:\greenwood\2025 Jobs\5825 USDA Sugarcane Research Lab Houma LA\07 Working Folder\Struct\S302.dwg
May 19, 2026 - 2:09pm

NOTES:

1. ELEVATION SHOWN ARE FOR TOP OF STEEL ELEVATIONS, UNLESS NOTED OTHERWISE.
2. ELEVATIONS FOR SLOPED MEMBER INDICATE WORKING POINT ELEVATIONS FOR TOP OF STEEL AT GRID LINES.

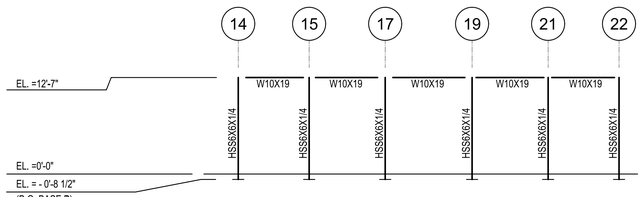

1 S-303 FRAMING ELEVATIONS ALONG GRID A

SCALE: 1/8" = 1'-0"

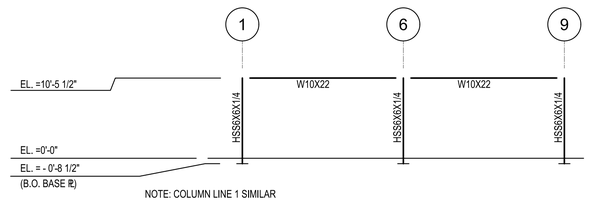

NOTE: COLUMN LINE 1 SIMILAR

2 S-303 FRAMING ELEVATIONS ALONG GRID C

SCALE: 1/8" = 1'-0"

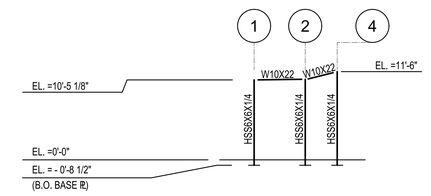

3 S-303 FRAMING ELEVATIONS ALONG GRID K

SCALE: 1/8" = 1'-0"

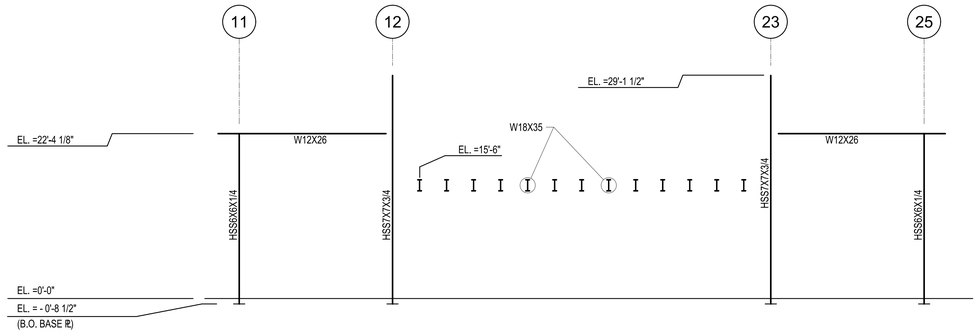

4 S-303 FRAMING ELEVATIONS ALONG GRID L

SCALE: 1/8" = 1'-0"

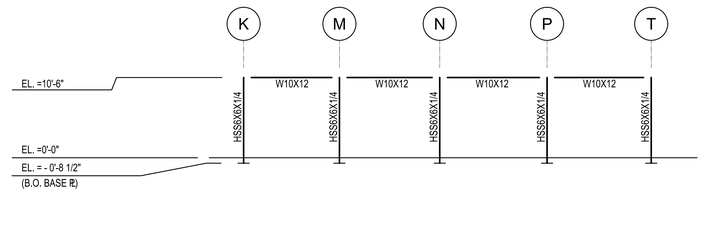

5 S-303 FRAMING ELEVATIONS ALONG GRID 2

SCALE: 1/8" = 1'-0"

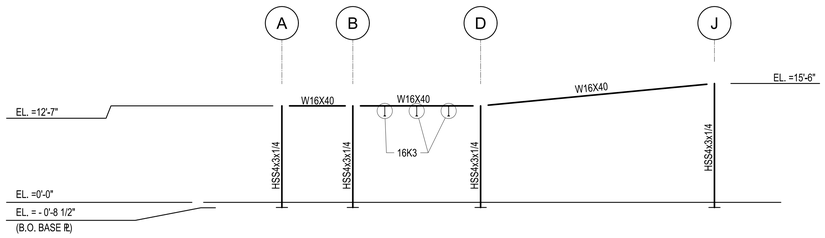

NOTE: COLUMN LINE 22 SIMILAR

6 S-303 FRAMING ELEVATIONS ALONG GRID 14

SCALE: 1/8" = 1'-0"

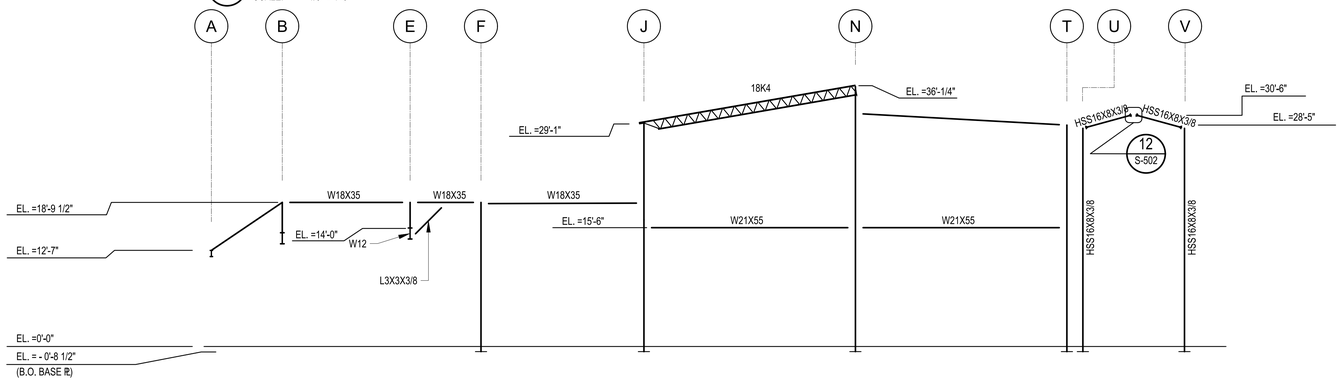

7 S-303 FRAMING ELEVATIONS ALONG GRID 18

SCALE: 1/8" = 1'-0"

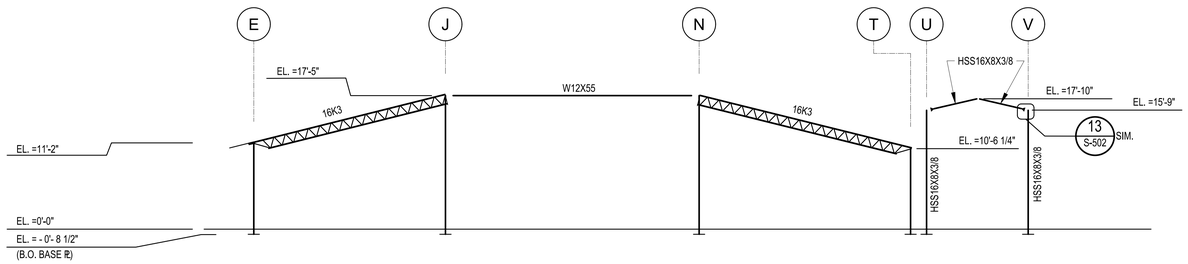

8 S-303 FRAMING ELEVATIONS ALONG GRID 26

SCALE: 1/8" = 1'-0"

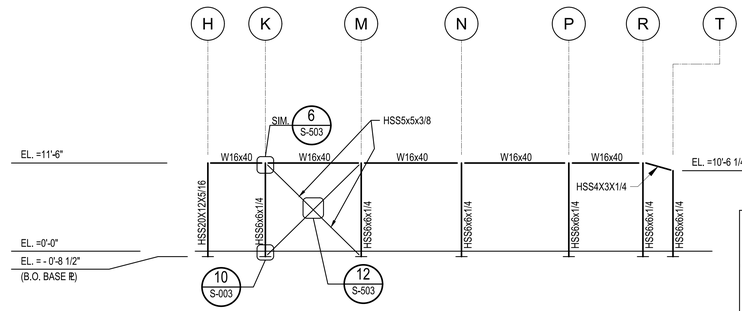

9 S-303 FRAMING ELEVATIONS ALONG GRID 4

SCALE: 1/8" = 1'-0"

0 4' 8' 16' 24'

SCALE: 1/8"= 1'-0"

NO.	DATE	BY	DESCRIPTION

REVISIONS

A–E FIRM	USDA
PROJECT MANAGER	REH
EPM	WN
DESIGNER	STM
PPM	XXX
CHECKED BY	DRL
SAFETY & HEALTH	CM
JOB #	5825
REAL PROPERTY	JS

USDA Agricultural Research Service

USDA AGRICULTURAL RESEARCH SERVICE
SUGARCANE RESEARCH LABORATORY
HOUMA, LOUISIANA

FRAMING ELEVATIONS LAB/OFFICE AND HEADHOUSE

PROJECT NO.	XXX
DATE	05/20/2026

AGRICULTURAL RESEARCH SERVICE
FACILITIES ENGINEERING BRANCH
5106 SUNNYSIDE AVENUE
BELTSVILLE, MD 20705–5100

SHEET S-303

J:\greenwood\2005 Jobs\5825 USDA Sugarcane Research Lab Houma LA\07 Working Folder\Sheet\S303.dwg
May 19, 2006 - 3:56pm

NOTES:

1. ELEVATION SHOWN ARE FOR TOP OF STEEL ELEVATIONS, UNLESS NOTED OTHERWISE.
2. ELEVATIONS FOR SLOPED MEMBER INDICATE WORKING POINT ELEVATIONS FOR TOP OF STEEL AT GRID LINES.

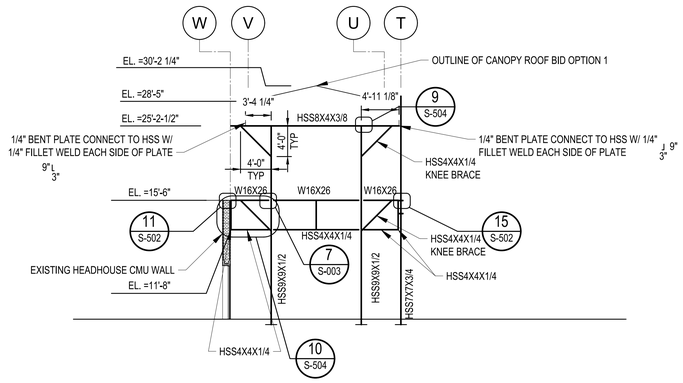

1 S-304 TYPICAL FRAMING ELEVATION OF BRIDGE

SCALE: 1/8" = 1'-0"

0 4' 8' 16' 24'

SCALE: 1/8"= 1'-0"

THOMAS H. TOLLISON
REGISTERED PROFESSIONAL ENGINEER
#10338
5/20/26
STATE OF MISSISSIPPI

THE Johnson & M. Adams FIRM
ARCHITECTS/ENGINEERS • PLANNING • SURVEYING • MANAGEMENT
P.O. BOX 513, GREENWOOD, MISSISSIPPI • (662) 455-4943

NO.	DATE	BY	DESCRIPTION

REVISIONS

USDA Agricultural Research Service

USDA AGRICULTURAL RESEARCH SERVICE
SUGARCANE RESEARCH LABORATORY
HOUMA, LOUISIANA

FRAMING ELEVATIONS LAB/OFFICE

A-E FIRM	USDA
PROJECT MANAGER REH	EPM WN
DESIGNER STM	PPM XXX
CHECKED BY DRL	SAFETY & HEALTH CM
JOB # 5825	REAL PROPERTY JS

PROJECT NO. XXX

DATE 05/20/2026

AGRICULTURAL RESEARCH SERVICE
FACILITIES ENGINEERING BRANCH
5106 SUNNYSIDE AVENUE
BELTSVILLE, MD 20705-5100

SHEET S-304

J:\greenwood\2025 Jobs\5825 USDA Sugarcane Research Lab Houma LA\07 Working Folder\Struct\S304.dwg
May 19, 2026 - 3:06pm

CONCRETE BEAM SCHEDULE					
CONCRETE BEAM			CONCRETE BEAM REINFORCING		
MARK	WIDTH	DEPTH	TOP	BOTTOM	STIRRUPS
GB-1	30"	28"	4-#8	4-#8	#4 AT 9"
GB-2	30"	28"	4-#9	4-#9	(2)-#4 AT 6"
GB-3	20"	28"	3-#8	3-#8	#4 AT 9"

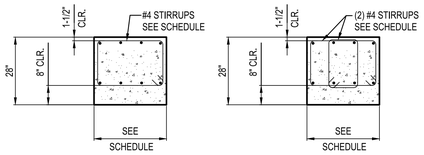

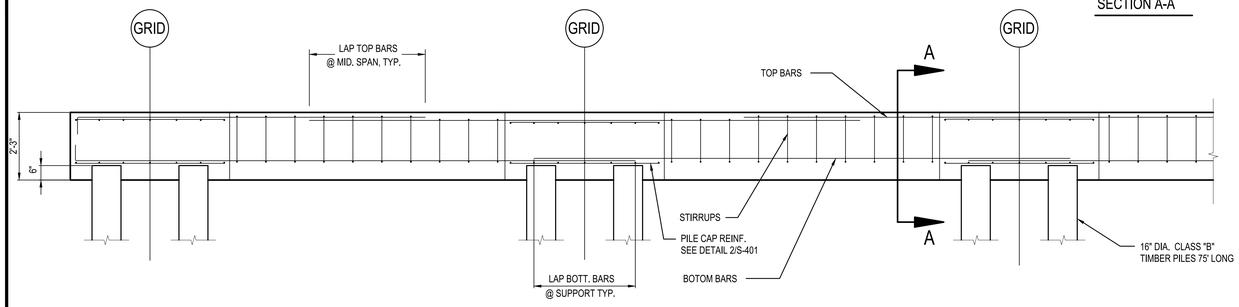

1 S-401 TYPICAL GRADE BEAM ELEVATION
SCALE: NTS

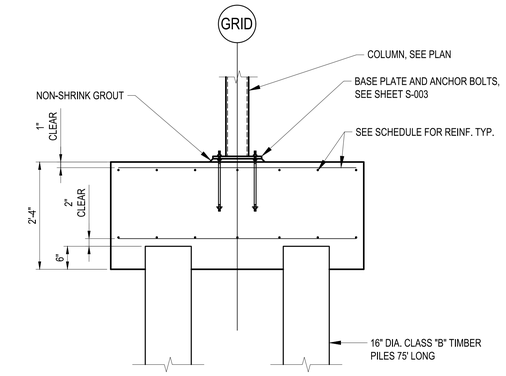

2 S-401 TYPICAL PILE CAP SECTION
SCALE: NTS

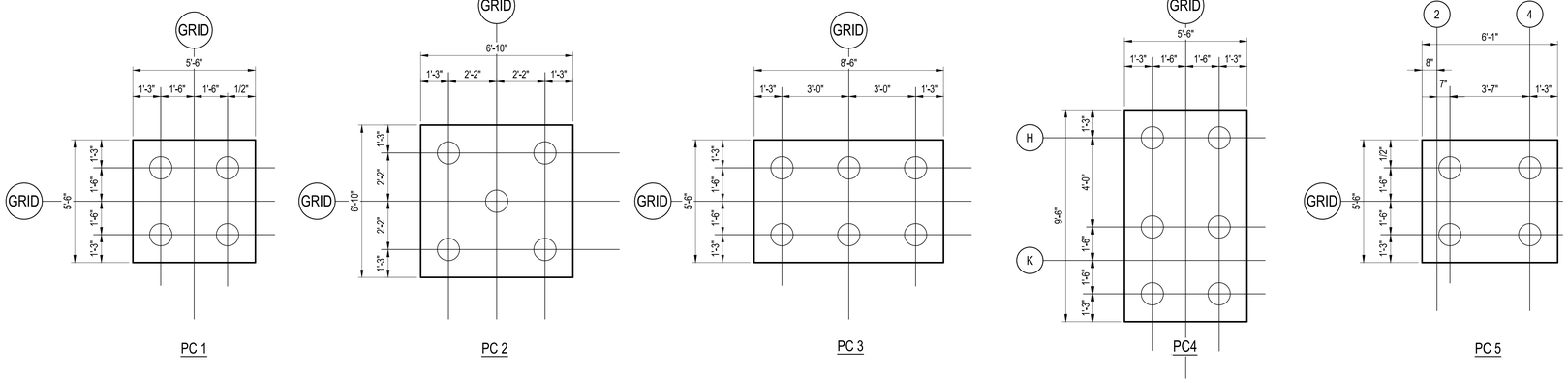

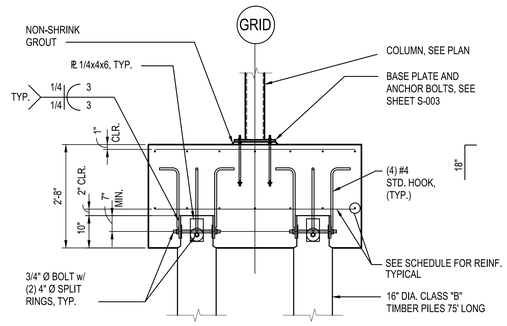

3 S-401 TENSION PILE CAP SECTION
SCALE: NTS

PILE CAP SCHEDULE					
PILE CAP				REINFORCING	
MARK	WIDTH (IN)	LENGTH (IN)	DEPTH (IN)	TOP	BOTTOM
PC1	66"	66"	28"	#6 @ 8" O.C.	#6 @ 8" O.C.
PC2	82"	82"	28"	#6 @ 8" O.C.	#6 @ 8" O.C.
PC3	66"	102"	28"	#6 @ 8" O.C.	#6 @ 6" O.C.
PC4	66"	114"	28"	#6 @ 8" O.C.	#6 @ 6" O.C.
PC5	66"	73"	28"	#6 @ 8" O.C.	#6 @ 8" O.C.

4 S-401 PILE CAP TYPES
SCALE: NTS

THOMAS H. TOLSON 10338 REGISTERED PROFESSIONAL ENGINEER STATE OF MISSISSIPPI 5/20/26

Johnson, Mirmiran & Thompson, Inc. | Johnson, Mirmiran & Thompson, P.M. Adams, PPC
ARCHITECTS/ENGINEERS • PLANNERS • SURVEYING • MANAGEMENT
P.O. BOX 513, GREENWOOD, MISSISSIPPI • (662) 455-4843

NO.	DATE	BY	DESCRIPTION

REVISIONS

USDA Agricultural Research Service

USDA AGRICULTURAL RESEARCH SERVICE
SUGARCANE RESEARCH LABORATORY
HOUMA, LOUISIANA

FOUNDATION SECTIONS AND DETAILS

A-E FIRM	USDA
PROJECT MANAGER	REH
EPM	WN
DESIGNER	STM
PPM	XXX
CHECKED BY	DRL
SAFETY & HEALTH	CM
JOB #	5825
REAL PROPERTY	JS
PROJECT NO.	XXX
DATE	05/20/2026

AGRICULTURAL RESEARCH SERVICE
FACILITIES ENGINEERING BRANCH
5106 SUNNYSIDE AVENUE
BELTSVILLE, MD 20705-5100

SHEET S-401
27 OF 176

J:\greenwood\2025 Jobs\5825 USDA Sugarcane Research Lab Houma LA\07 Working Folder\Struct\S401.dwg
May 19, 2026 - 3:06pm

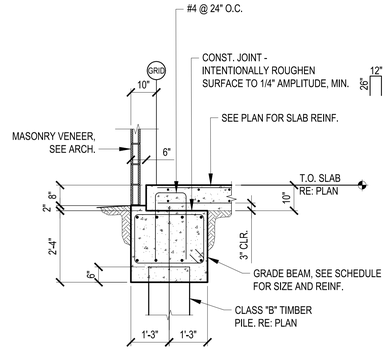

1 S-402 SECTION
SCALE: 1/2" = 1'-0"

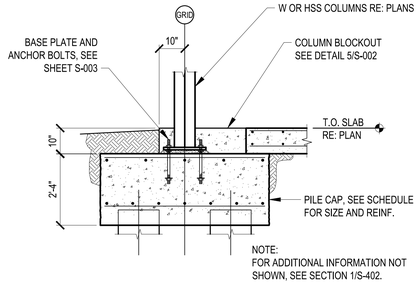

2 S-402 SECTION
SCALE: 1/2" = 1'-0"

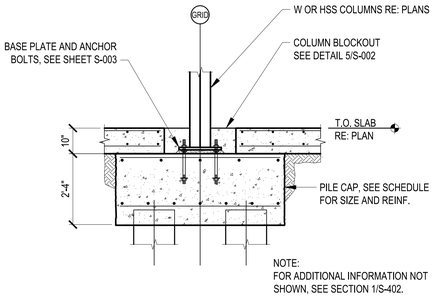

3 S-402 SECTION
SCALE: 1/2" = 1'-0"

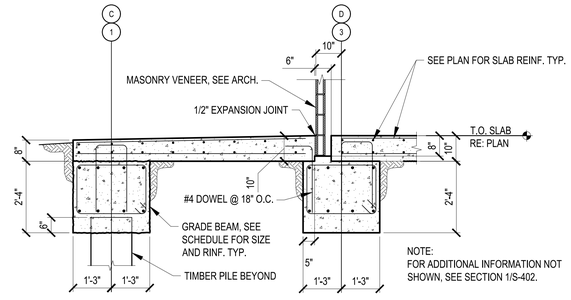

4 S-402 SECTION
SCALE: 1/2" = 1'-0"

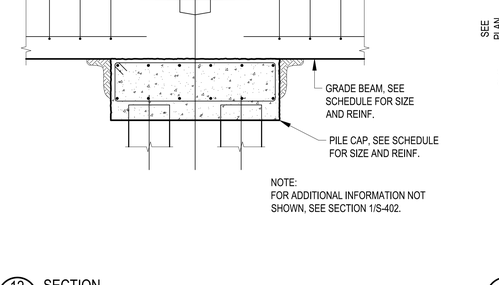

5 S-402 SECTION
SCALE: 1/2" = 1'-0"

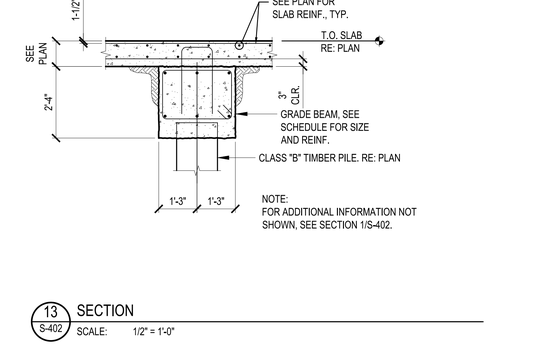

6 S-402 SECTION
SCALE: 1/2" = 1'-0"

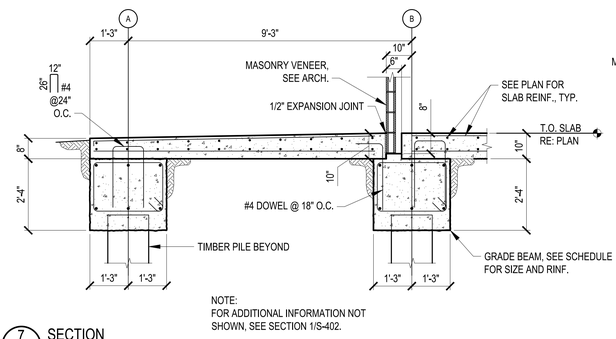

7 S-402 SECTION
SCALE: 1/2" = 1'-0"

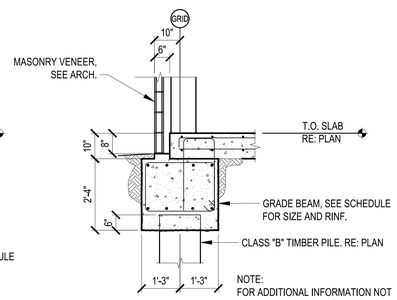

8 S-402 SECTION
SCALE: 1/2" = 1'-0"

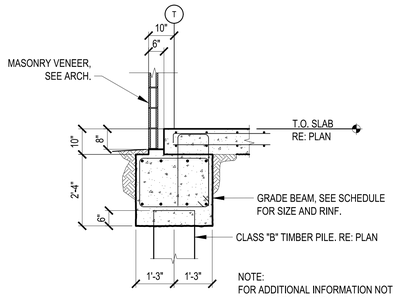

9 S-402 SECTION
SCALE: 1/2" = 1'-0"

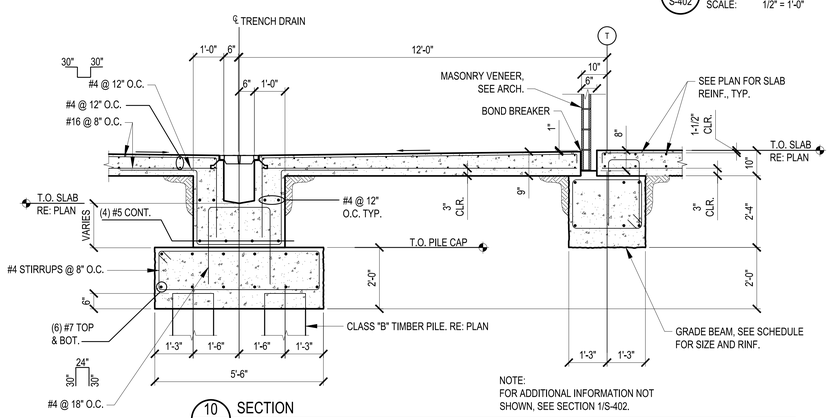

10 S-402 SECTION
SCALE: 1/2" = 1'-0"

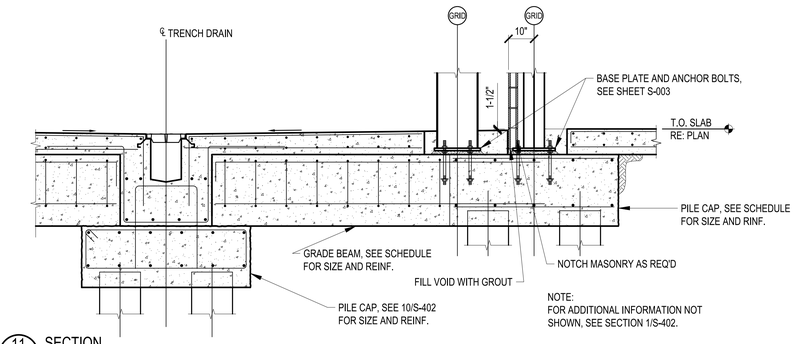

11 S-402 SECTION
SCALE: 1/2" = 1'-0"

12 S-402 SECTION
SCALE: 1/2" = 1'-0"

13 S-402 SECTION
SCALE: 1/2" = 1'-0"

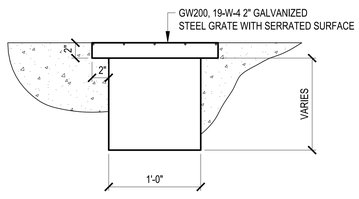

14 S-402 SECTION
SCALE: 1 1/2" = 1'-0"

0 6" 1' 2'
SCALE: 1 1/2"=1'-0"

0 1' 2' 4' 8'
SCALE: 1/2"=1'-0"

THOMAS H. TOLLISON, JR. REGISTERED PROFESSIONAL ENGINEER #10338 5/20/26 STATE OF MISSISSIPPI

NO.	DATE	BY	DESCRIPTION
			REVISIONS

The Johnson T.M. Adams Firm PA
ARCHITECTS/ENGINEERS • PLANNERS • SURVEYORS • MANAGEMENT
P.O. BOX 513, GREENWOOD, MISSISSIPPI • (662) 455-4943

A–E FIRM	USDA
PROJECT MANAGER	EPM
REH	WN
DESIGNER	PPM
STM	XXX
CHECKED BY	SAFETY & HEALTH
DRL	CM
JOB #	REAL PROPERTY
5825	JS

USDA Agricultural Research Service

USDA AGRICULTURAL RESEARCH SERVICE
SUGARCANE RESEARCH LABORATORY
HOUMA, LOUISIANA

FOUNDATION SECTONS AND DETAILS

PROJECT NO.	XXX
DATE	05/20/2026

AGRICULTURAL RESEARCH SERVICE
FACILITIES ENGINEERING BRANCH
5106 SUNNYSIDE AVENUE
BELTSVILLE, MD 20705-5100

SHEET S-402
28 OF 176

J:\greenwood\2025 Jobs\5825 USDA Sugarcane Research Lab Houma LA\07 Working Folder\Struct\S402.dwg
May 19, 2026 - 3:06pm

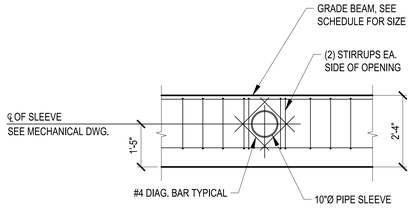

1 S-403 SECTION
SCALE: 1/2" = 1'-0"

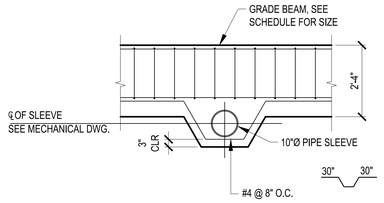

2 S-403 SECTION
SCALE: 1/2" = 1'-0"

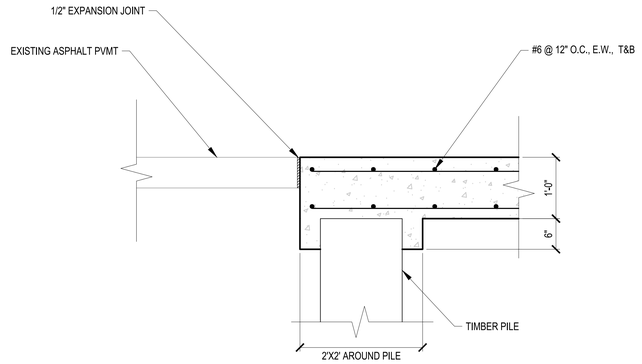

5 S-403 SECTION
SCALE: 1" = 1'-0"

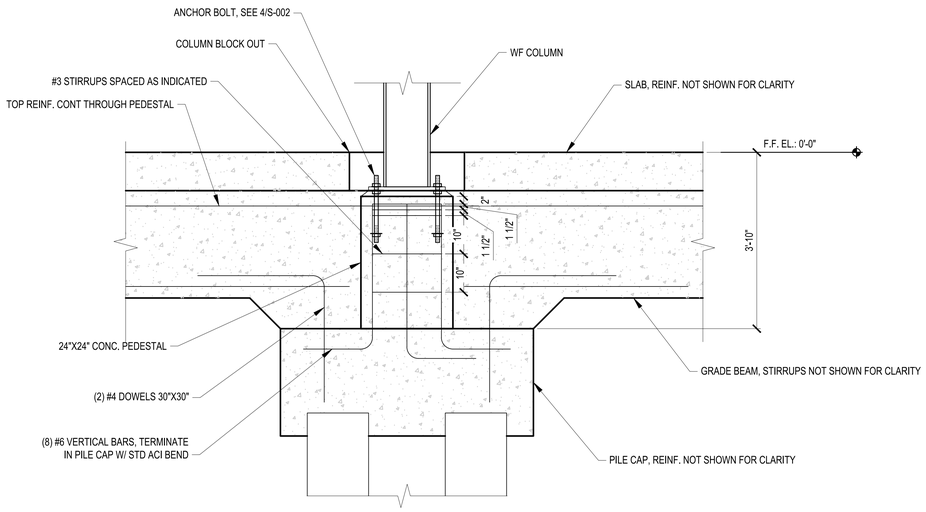

3 S-403 SECTION
SCALE: 3/4" = 1'-0"

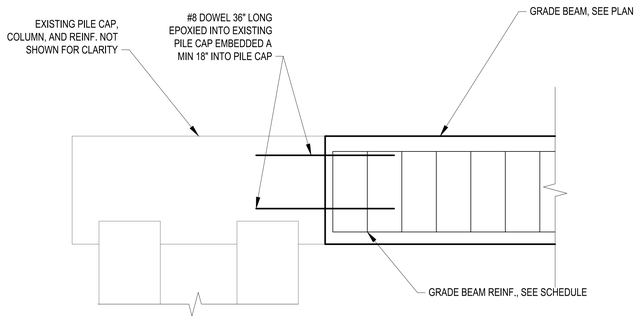

NOTE: EXISTING SLAB AND NEW SLAB NOT SHOWN FOR CLARITY

4 S-403 SECTION
SCALE: 3/4" = 1'-0"

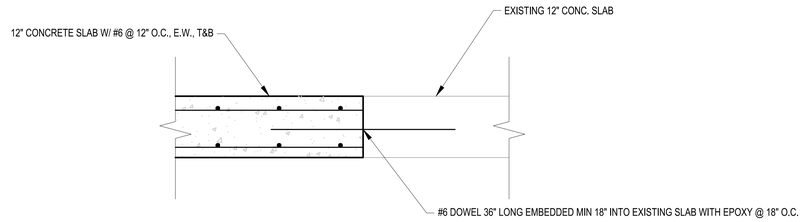

6 S-403 SECTION
SCALE: 1" = 1'-0"

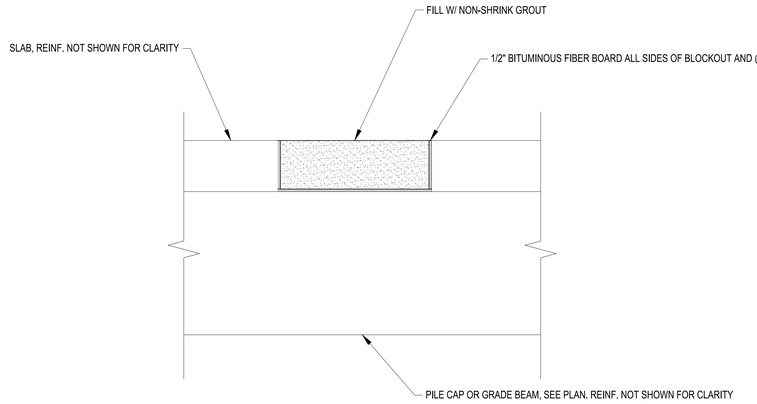

NOTE: PROVIDE THIS DETAIL AT ALL COLUMN BLOCKOUTS FOR THE CANOPY OF BID OPTION 1 IF BID OPTION 1 IS NOT AWARDED.

7 S-403 COLUMN BLOCKOUT OF BID OPTION 1
SCALE: 1" = 1'-0"

THOMAS H. TOLLISON 10338 REGISTERED PROFESSIONAL ENGINEER STATE OF MISSISSIPPI 5/20/26

0 1' 2' 3'
SCALE: 1"=1'-0"

0 1' 2' 4' 8'
SCALE: 1/2"=1'-0"

The Johnson | M Adams FIRM PSC
ARCHITECTS/ENGINEERS • PLANNERS • SURVEYING • MANAGEMENT
P.O. BOX 513, GREENWOOD, MISSISSIPPI • (662) 455-4943

NO.	DATE	BY	DESCRIPTION
			REVISIONS

A-E FIRM	USDA
PROJECT MANAGER	EPM
REH	WN
DESIGNER	PPM
STM	XXX
CHECKED BY	SAFETY & HEALTH
DRL	CM
JOB #	REAL PROPERTY
5825	JS

USDA Agricultural Research Service

USDA AGRICULTURAL RESEARCH SERVICE
SUGARCANE RESEARCH LABORATORY
HOUMA, LOUISIANA

FOUNDATION SECTIONS AND DETAILS

PROJECT NO. XXX	AGRICULTURAL RESEARCH SERVICE FACILITIES ENGINEERING BRANCH 5106 SUNNYSIDE AVENUE BELTSVILLE, MD 20705-5100	SHEET S-403
DATE 05/20/2026		29 OF 176

J:\greenwood\2025 Jobs\5825 USDA Sugarcane Research Lab Houma LA\07 Working Folder\Sheet\S403.dwg
May 19, 2026 - 3:06pm

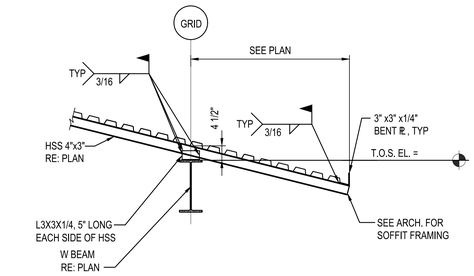

1 S-501 SECTION

SCALE: 1/2" = 1'-0"

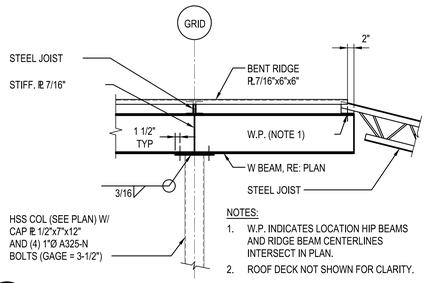

2 S-501 SECTION

SCALE: 1/2" = 1'-0"

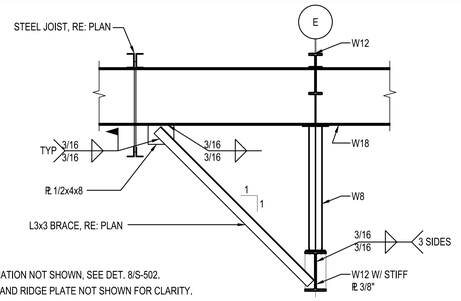

3 S-501 SECTION

SCALE: 1/2" = 1'-0"

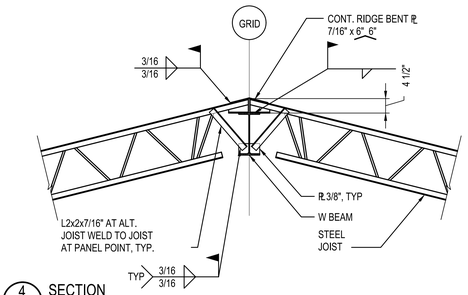

4 S-501 SECTION

SCALE: 1/2" = 1'-0"

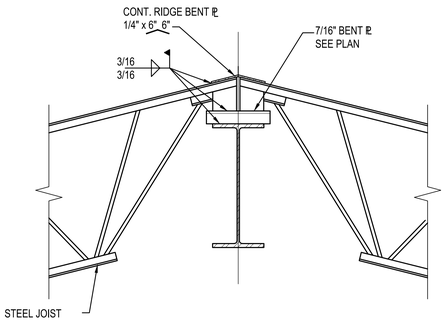

5 S-501 SECTION

SCALE: 1 1/2" = 1'-0"

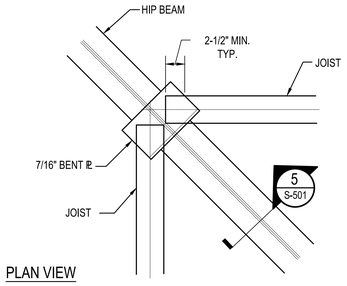

6 S-501 SECTION

SCALE: 1 1/2" = 1'-0"

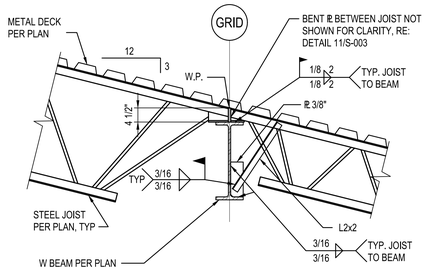

7 S-501 SECTION

SCALE: 3/4" = 1'-0"

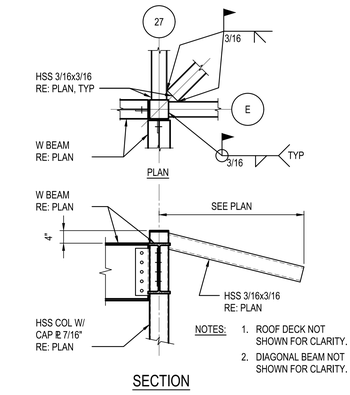

8 S-501 SECTION

SCALE: 3/4" = 1'-0"

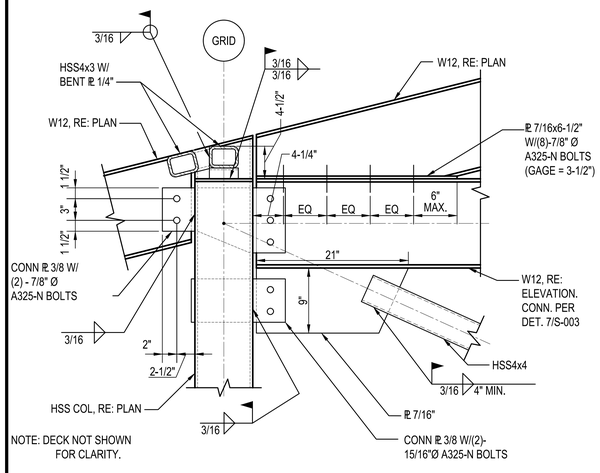

9 S-501 SECTION

SCALE: 1 1/2" = 1'-0"

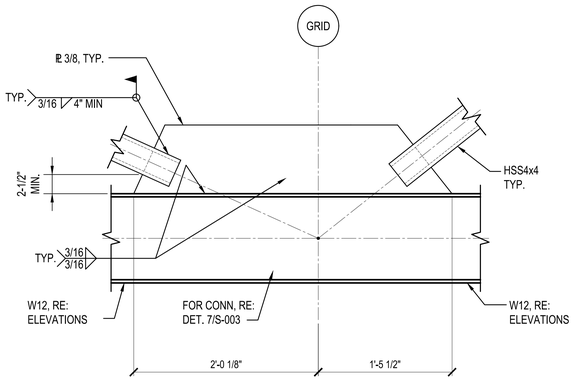

10 S-501 SECTION

SCALE: 1 1/2" = 1'-0"

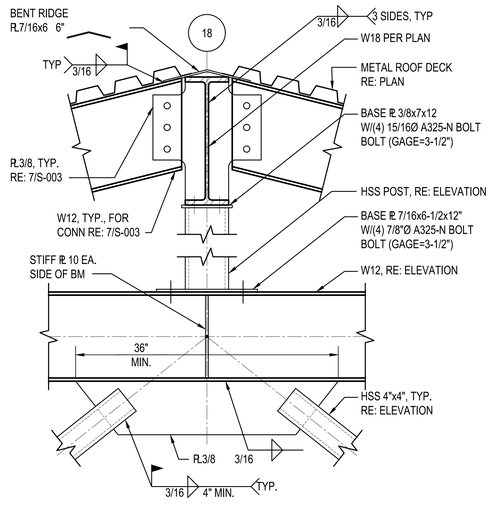

11 S-501 SECTION

SCALE: 1 1/2" = 1'-0"

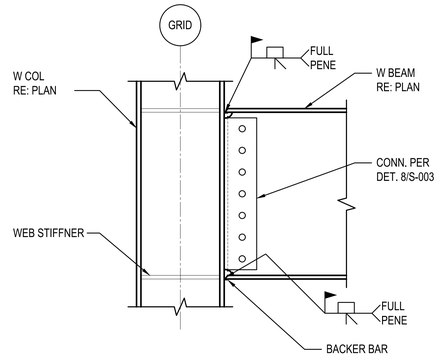

12 S-501 MOMENT CONNECTION, TYP

SCALE: 1 1/2" = 1'-0"

Johnson, Mirmiran & Thompson, Inc. | Adams, PPM P.A.
ARCHITECTS/ENGINEERS • PLANNERS • SURVEYING • MANAGEMENT
P.O. BOX 313, GREENWOOD, MISSISSIPPI • (662) 455-4843

NO.	DATE	BY	DESCRIPTION
			REVISIONS

THOMAS H. TOLLIVER — REGISTERED PROFESSIONAL ENGINEER — #10338 — STATE OF MISSISSIPPI — 5/20/26

SCALE: 3/4"=1'-0"

SCALE: 1 1/2"=1'-0"

SCALE: 1/2"=1'-0"

USDA Agricultural Research Service

USDA AGRICULTURAL RESEARCH SERVICE
SUGARCANE RESEARCH LABORATORY
HOUMA, LOUISIANA

STEEL FRAMING SECTIONS AND DETAILS

A–E FIRM	USDA
PROJECT MANAGER	REH
EPM	WN
DESIGNER	STM
PPM	XXX
CHECKED BY	DRL
SAFETY & HEALTH	CM
JOB #	5825
REAL PROPERTY	JS

PROJECT NO. XXX
DATE 05/20/2026

AGRICULTURAL RESEARCH SERVICE
FACILITIES ENGINEERING BRANCH
5106 SUNNYSIDE AVENUE
BELTSVILLE, MD 20705–5100

SHEET S-501
30 OF 176

J:\Agreenwood\2025 Jobs\5825 USDA Sugarcane Research Lab Houma LA\07 Working Folder\Struct\S501.dwg
May 19, 2026 - 2:06pm

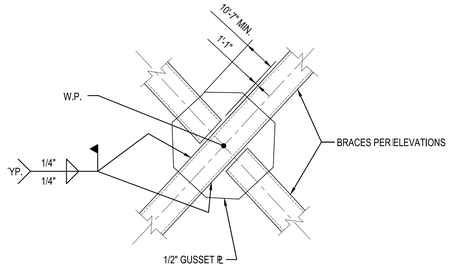

1 DETAIL S-502
SCALE: 1" = 1'-0"

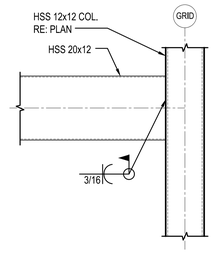

2 DETAIL S-502
SCALE: 1/2" = 1'-0"

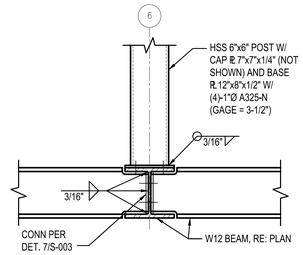

3 DETAIL S-502
SCALE: 1" = 1'-0"

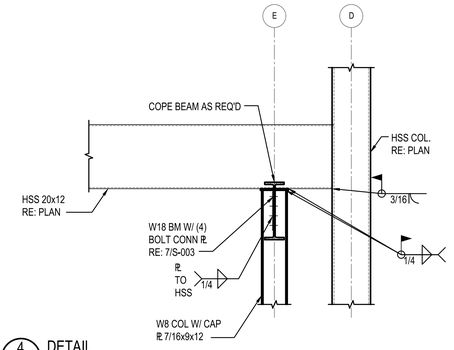

4 DETAIL S-502
SCALE: 1/2" = 1'-0"

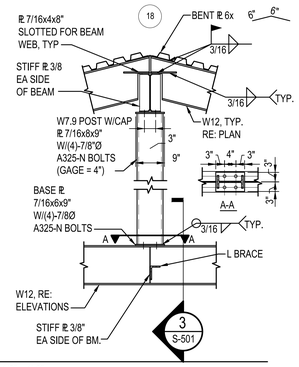

5 DETAIL S-502
SCALE: 1/2" = 1'-0"

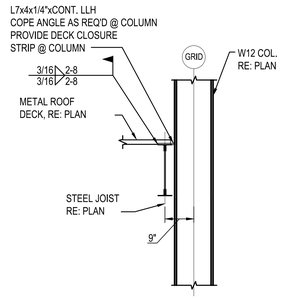

6 DETAIL S-502
SCALE: 1/2" = 1'-0"

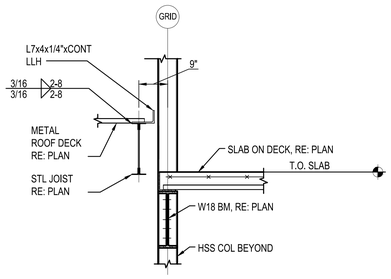

7 DETAIL S-502
SCALE: 1/2" = 1'-0"

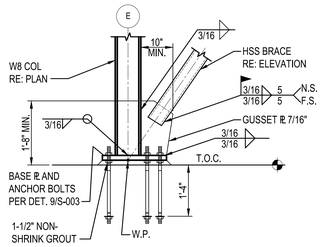

8 DETAIL S-502
SCALE: 1/2" = 1'-0"

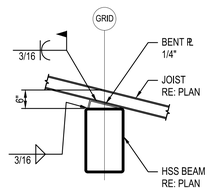

9 DETAIL S-502
SCALE: 1/2" = 1'-0"

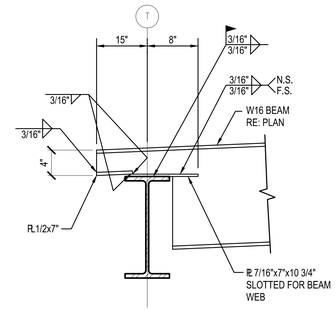

10 DETAIL S-502
SCALE: 1" = 1'-0"

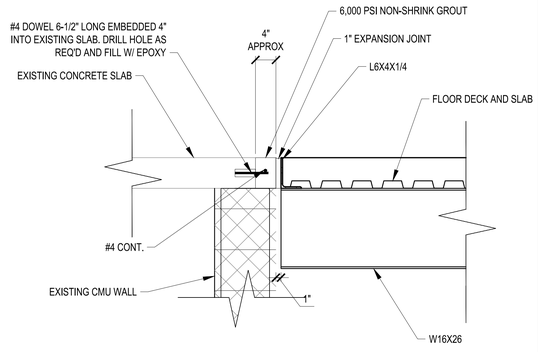

11 DETAIL OF EXPANSION JOINT @ EXISTING BUILDING AND BRIDGE S-502
SCALE: 1/2" = 1'-0"

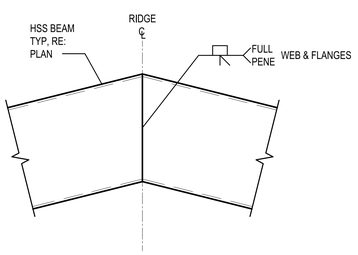

12 DETAIL S-502
SCALE: 1/2" = 1'-0"

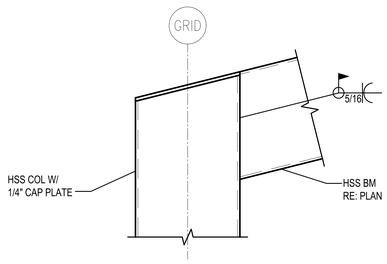

13 DETAIL S-502
SCALE: 1/2" = 1'-0"

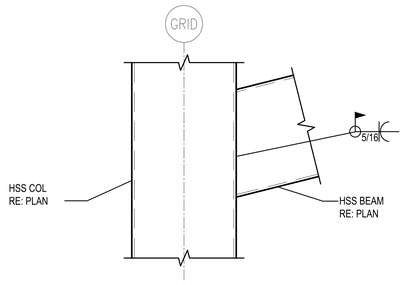

14 DETAIL S-502
SCALE: 1/2" = 1'-0"

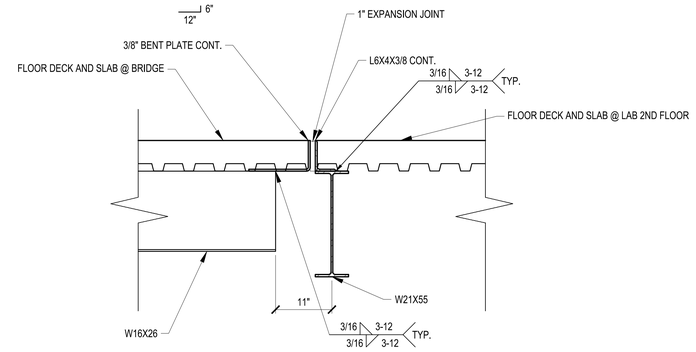

NOTE: EXTEND DECK EDGE OF LAB BUILDING AS REQUIRED AT BRIDGE.

15 DETAIL OF EXPANSION JOINT @ LAB BUILDING AND BRIDGE S-502
SCALE: 1" = 1'-0"

Johnson ⁊ M Adams PPA
ARCHITECTS/ENGINEERS • PLANNERS • SURVEYING • MANAGEMENT
P.O. BOX 313, GREENWOOD, MISSISSIPPI • (662) 455-4443

NO.	DATE	BY	DESCRIPTION
			REVISIONS

A–E FIRM	USDA
PROJECT MANAGER	EPM
REH	WN
DESIGNER	PPM
STM	XXX
CHECKED BY	SAFETY & HEALTH
DRL	CM
JOB #	REAL PROPERTY
5825	JS

USDA Agricultural Research Service

USDA AGRICULTURAL RESEARCH SERVICE
SUGARCANE RESEARCH LABORATORY
HOUMA, LOUISIANA

STEEL FRAMING SECTIONS AND DETAILS

PROJECT NO.	XXX
DATE	05/20/2026

AGRICULTURAL RESEARCH SERVICE
FACILITIES ENGINEERING BRANCH
5106 SUNNYSIDE AVENUE
BELTSVILLE, MD 20705–5100

SHEET S-502
31 OF 176

THOMAS H. TOLLSON
REGISTERED PROFESSIONAL
ENGINEER
#10338
STATE OF MISSISSIPPI

0 1' 2' 3'
SCALE: 1"=1'-0"

0 1' 2' 4' 8'
SCALE: 1/2"=1'-0"

J:\greenwood\2025 Jobs\5825 USDA Sugarcane Research Lab Houma LA\07 Working Folder\Struct\S502.dwg
May 19, 2026 - 2:09pm

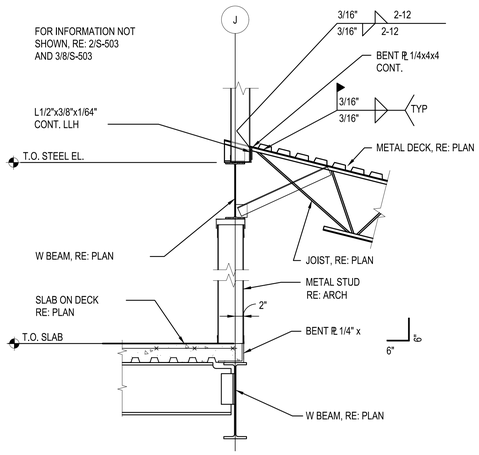

1 S-503 SECTION
SCALE: 1/2" = 1'-0"

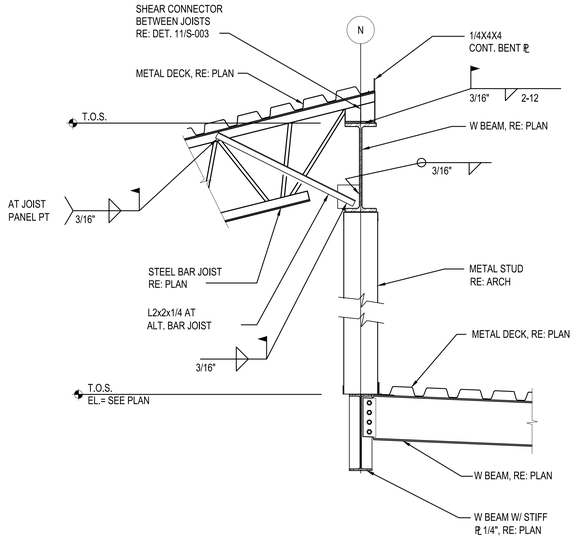

2 S-503 SECTION
SCALE: 1/2" = 1'-0"

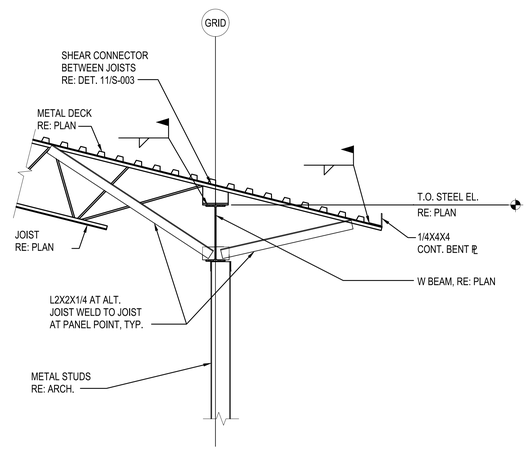

3 S-503 SECTION
SCALE: 1/2" = 1'-0"

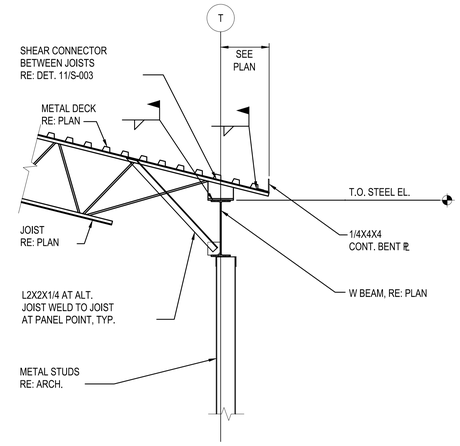

4 S-503 SECTION
SCALE: 1/2" = 1'-0"

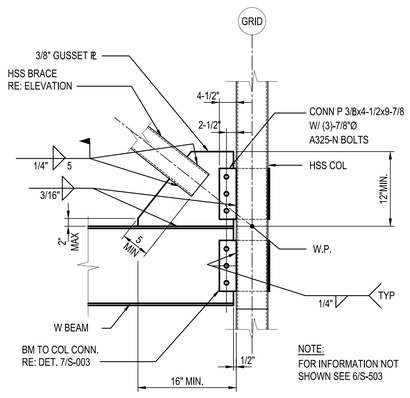

5 S-503 SECTION
SCALE: 1/2" = 1'-0"

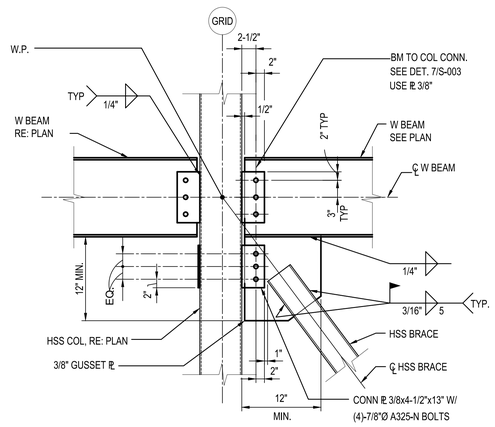

6 S-503 SECTION
SCALE: 1/2" = 1'-0"

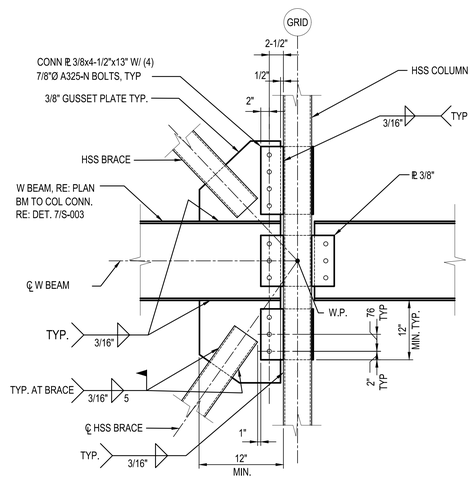

7 S-503 SECTION
SCALE: 1/2" = 1'-0"

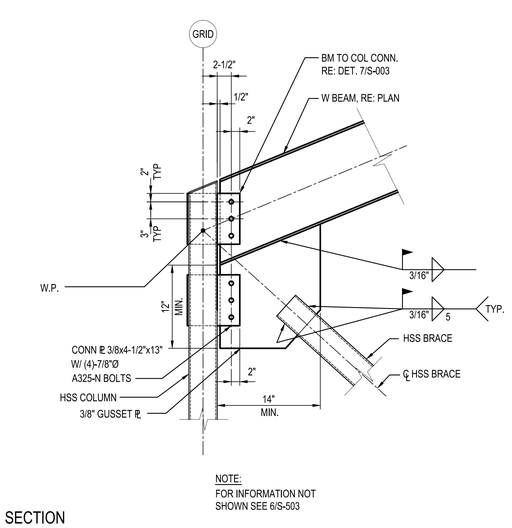

8 S-503 SECTION
SCALE: 1/2" = 1'-0"

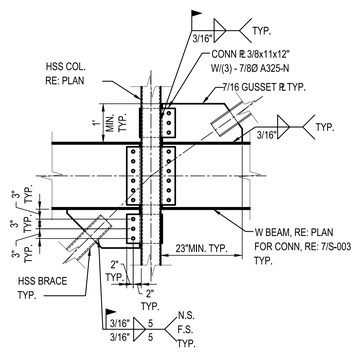

9 S-503 SECTION
SCALE: 1/2" = 1'-0"

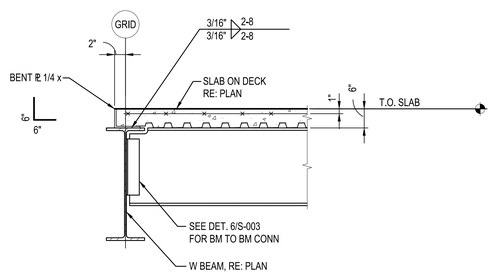

10 S-503 SECTION
SCALE: 1/2" = 1'-0"

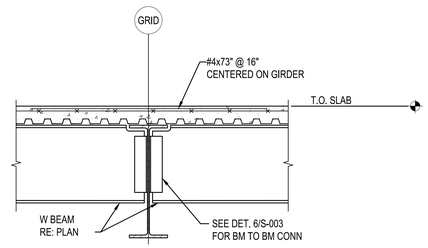

11 S-503 SECTION
SCALE: 1/2" = 1'-0"

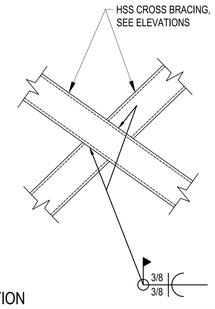

12 S-503 SECTION
SCALE: 1/2" = 1'-0"

0 1' 2' 4' 8'
SCALE: 1/2"=1'-0"

NO.	DATE	BY	DESCRIPTION

REVISIONS

Johnson • M. Adams PSC
ARCHITECTS/ENGINEERS • PLANNING • SURVEYING • MANAGEMENT
P.O. BOX 513, GREENWOOD, MISSISSIPPI • (662) 455-4843

USDA Agricultural Research Service

USDA AGRICULTURAL RESEARCH SERVICE
SUGARCANE RESEARCH LABORATORY
HOUMA, LOUISIANA

STEEL FRAMING SECTIONS AND DETAILS

A–E FIRM	USDA
PROJECT MANAGER	EPM
REH	WN
DESIGNER	PPM
STM	XXX
CHECKED BY	SAFETY & HEALTH
DRL	CM
JOB #	REAL PROPERTY
5825	JS

PROJECT NO.	AGRICULTURAL RESEARCH SERVICE FACILITIES ENGINEERING BRANCH 5106 SUNNYSIDE AVENUE BELTSVILLE, MD 20705–5100	SHEET
XXX		S-503
DATE		32 OF 176
05/20/2026		

J:\greenwood\2025 Jobs\5825 USDA Sugarcane Research Lab Houma LA\07 Working Folder\Struct\S503.dwg
May 19, 2026 - 3:06pm

TABLE 1 JOIST SCHEDULE

MARK	SPAN (MAX)	DEAD LOAD[1] (PSF)	ROOF LIVE LOAD (PSF)	COLLATERAL LOADS (PSF)	SNOW LOADS (PSF)	UPLIFT (PSF)	ROLLOVER LOAD (LB)	MECHANICAL EQUIPMENT LOAD	JOIST EXT. TYPE	JOIST TYPE[4]
10K1	16'-6"	11	20	10	NA	-49.5	500	SEE NOTE 5	R5	1
12K1	15'-6"	11	20	10	NA	-49.5	500	SEE NOTE 5	NA	1
12K3	20'-0"	11	20	10	NA	-49.5	500	SEE NOTE 5	NA	1
16K3	27'-8"	11	20	10	NA	-49.5	500	SEE NOTE 5	R5	1
18K4	27'-7"	11	20	10	NA	-49.5	500	SEE NOTE 5	R5	1
20K6	30'-6"	11	20	10	NA	-49.5	500	SEE NOTE 5	R5	1

NOTES:
(1) DEAD LOADS TABULATED DO NOT INCLUDE AN ALLOWANCE FOR JOIST SELF-WEIGHT.
(2) DISTRIBUTED LOAD VALUES ARE PER UNIT AREA. CONTRACTOR MUST DETERMINE TRIBUTARY WIDTH FOR THE ASSOCIATED LOAD AND CORRESPONDING LOAD PER UNIT LENGTH FOR EACH JOISTS SHOWN ON DRAWINGS AND SHALL DESIGN JOIST ACCORDINGLY.
(3) POSITIVE LOADS ACT DOWNWARD.
(4) TYPE 1 JOIST - UNDERSLUNG W/ PARALLEL CHORDS.
(5) SEE PLAN VIEW FOR MECHANICAL EQUIPMENT LOADS. COORDINATE LOCATIONS AND FINAL LOADING WITH MECHANICAL CONTRACTOR.

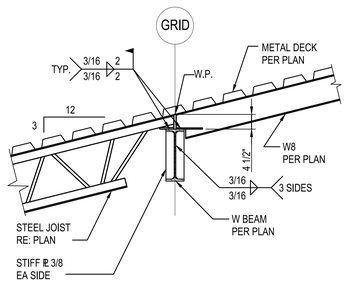

1 S-504 SECTION
SCALE: 3/4" = 1'-0"

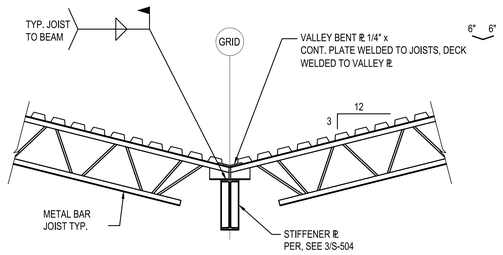

NOTE: PROVIDE FULL PENETRATION BUTT WELD IN THE FIELD FOR BENT PLATE SPLICE

2 S-504 SECTION
SCALE: 1/2" = 1'-0"

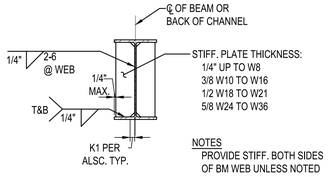

NOTES
PROVIDE STIFF. BOTH SIDES OF BM WEB UNLESS NOTED OTHERWISE ON PLAN. USE THIS DETAIL WHEN STIFF. INFO. NOT OTHERWISE NOTED

3 S-504 TYPICAL STIFFENER PLATE DETAIL
SCALE: 1" = 1'-0"

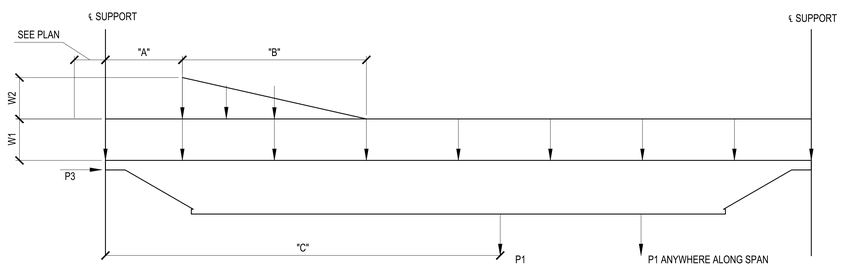

ROOF JOIST

4 S-504 LOADING DIAGRAM
SCALE: 3/4" = 1'-0"

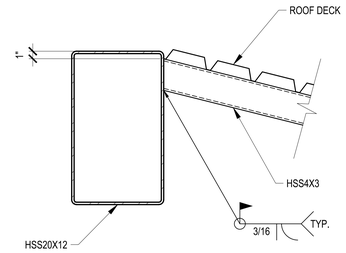

5 S-504 SECTION
SCALE: 1-1/2" = 1'-0"

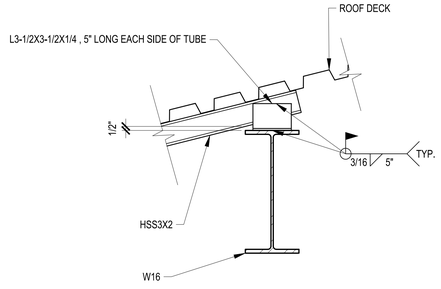

6 S-504 SECTION
SCALE: 1-1/2" = 1'-0"

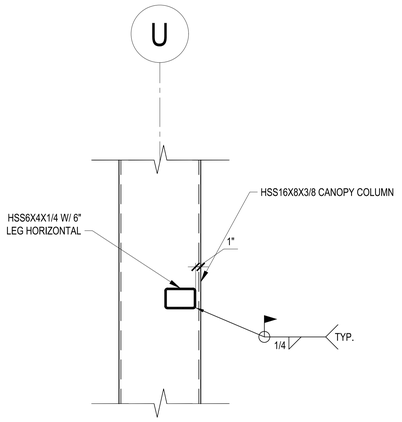

7 S-504 RAIN SCREEN TUBE CONNECTION
SCALE: 1" = 1'-0"

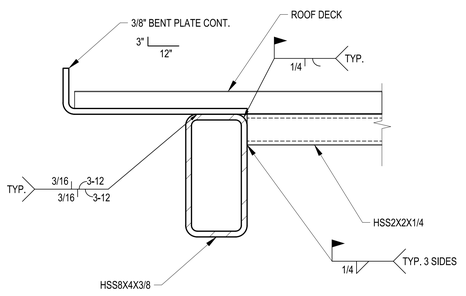

8 S-504 BRIDGE ROOF CONNECTION
SCALE: 3" = 1'-0"

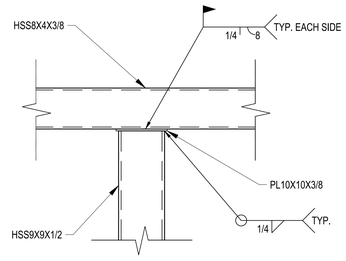

9 S-504 CONNECTION TO TOP OF COLUMN
SCALE: 1" = 1'-0"

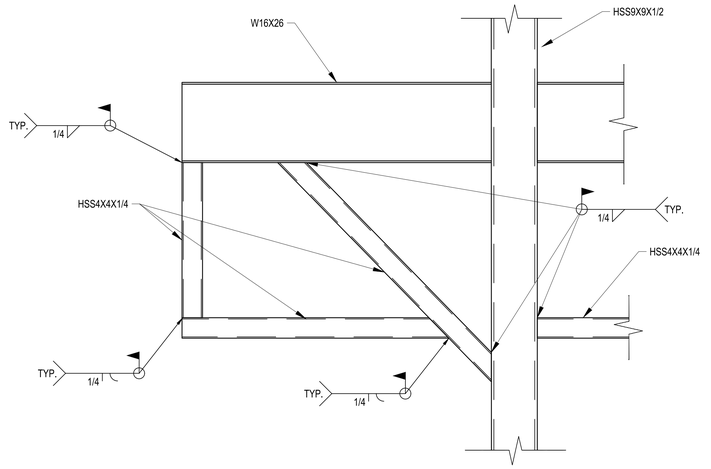

10 S-504 CONNECTION DETAIL
SCALE: 1" = 1'-0"

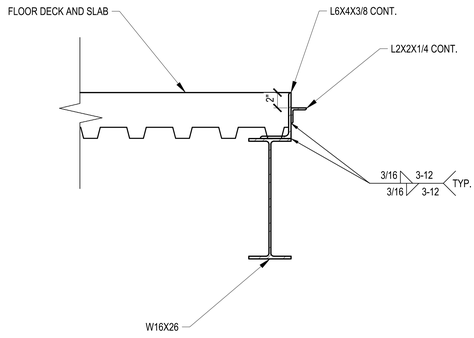

11 S-504 HATCH OPENING
SCALE: 1-1/2" = 1'-0"

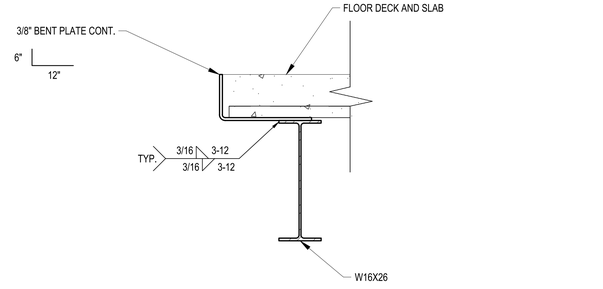

12 S-504 BRIDGE DECK EDGE
SCALE: 1-1/2" = 1'-0"

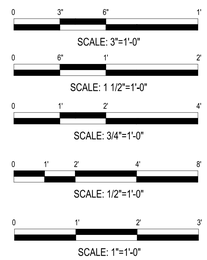

Johnson, Mirmiran & Thompson, Inc. Adams, PPA
ARCHITECTS/ENGINEERS • PLANNING • SURVEYING • MANAGEMENT
P.O. BOX 313, GREENWOOD, MISSISSIPPI • (662) 455-4843

NO.	DATE	BY	DESCRIPTION
			REVISIONS

USDA Agricultural Research Service

USDA AGRICULTURAL RESEARCH SERVICE
SUGARCANE RESEARCH LABORATORY
HOUMA, LOUISIANA

STEEL FRAMING SECTIONS AND DETAILS

A-E FIRM	USDA
PROJECT MANAGER	REH
EPM	WN
DESIGNER	STM
PPM	XXX
CHECKED BY	DRL
SAFETY & HEALTH	CM
JOB #	5825
REAL PROPERTY	JS

PROJECT NO. XXX
DATE 05/20/2026

AGRICULTURAL RESEARCH SERVICE
FACILITIES ENGINEERING BRANCH
5106 SUNNYSIDE AVENUE
BELTSVILLE, MD 20705-5100

SHEET S-504
33 OF 176

STEPHEN H. TOMPKINS
REGISTERED PROFESSIONAL ENGINEER
#10338
STATE OF MISSISSIPPI

J:\greenwood\2025 Jobs\5825 USDA Sugarcane Research Lab Houma LA\07 Working Folder\Struct\S504.dwg
May 19, 2026 - 2:06pm