ARCHITECTURAL LEGEND

- EARTH
- CONCRETE
- CONCRETE MASONRY UNITS (PLAN-LARGE SCALE AND DETAILS)
- CONCRETE MASONRY UNITS (SECTION)
- CMU (PLAN-SMALL SCALE)
- BRICK
- WOOD (ROUGH)
- WOOD (FINISH)
- METAL
- GYPSUM WALLBOARD
- BLANKET INSULATION
- RIGID INSULATION (ROOF)
- THERMAL INSULATION (AS INDICATED)
- COMPOSITION MASTIC
- GLASS
- METAL STUD PARTITION

ARCHITECTURAL SYMBOLS

Symbol	Description
X	WALL TYPE, SEE A-401
87	ROOM NUMBER
	SPOT ELEVATION
X / XXXX	DETAIL REFERENCE NUMBER SHEET WHERE DETAIL APPEARS TITLE BUBBLE/DETAIL REFERENCE BUBBLE
X / XXXX	SECTION CUT BUBBLE
X / XXXX	ELEVATION BUBBLE
3	WINDOW TYPE, SEE A-802
J	BORROWED LITE ELEVATION
1037 A	DOOR NUMBER, SEE A-801
L-4	LOUVER TYPE, SEE A-802

ABBREVIATIONS

A

AB	ANCHOR BOLT
AC	ALTERNATING CURRENT
A/C	AIR CONDITIONING
ACI	AMERICAN CONCRETE INSTITUTE
ACSR	ALUMINUM CONDUCTOR STEEL REINFORCED
ACST	ACOUSTIC
A.D.	ACCESS DOOR
AD	AREA DRAIN
AFF	ABOVE FINISH FLOOR
AGG	AGGREGATE
AHU	AIR HANDLING UNIT
AIC	AMPS INTERRUPTING CAPACITY (SYM RMS)
AISC	AMERICAN INSTITUTE OF STEEL CONSTRUCTION
AL or ALUM	ALUMINUM
A.L.	ACTIVE LEAF
ALT	ALTERNATE
AMP	AMPERE
ANOD	ANODIZED
ANSI	AMERICAN NATIONAL STANDARD INSTITUTE
AP	ACCESS PANEL
APPD	APPROVED
APPROX.	APPROXIMATE
ARCH	ARCHITECTURAL OR ARCHITECT
A.R.I.	AMERICAN REFRIGERATION INSTITUTE
ASPH	ASPHALT
ATC	ACOUSTICAL TILE CEILING
AUTO	AUTOMATIC
AVG	AVERAGE
AWG	AMERICAN WIRE GAUGE
∠	ANGLE
@	AT
+	AND

B

B	BASE FINISHES
BATT INSUL	BATT INSULATION
BB	BULLETIN BOARD
BC	BOOKCASE
BD	BOARD
BDY	BOUNDARY
BEJ	BRICK EXPANSION JOINT
BIS	BIRD AND INSECT SCREEN
BIT	BITUMINOUS
BL	BUILDING LINE
BLDG	BUILDING
BLK	BLOCK
BLKG	BLOCKING
BM	BEAM
B.M.	BENCH MARK
B.O.	BOTTOM OF
BOT	BOTTOM
BRCG	BRACING
BRCL	BEDROOM CLOSET
BRDG	BRIDGING
BRG	BEARING
BRK	BRICK
BRKT	BRACKET
BT	BENT
BTU	BRITISH THERMAL UNIT
BTUH	BTU PER HOUR

C

C	CEILING FINISHES
C OR CND	CONDUIT (FOR RACEWAY-ELEC. SHTS.)
CAP	CAPACITY
CATV	CABLE TELEVISION
CC OR C TO C	CENTER TO CENTER
CB	CATCH BASIN (OR CIRCUIT BREAKER)
CE	COVER ELEVATION
CEM	CEMENT
CFM	CUBIC FEET PER MINUTE
CHIM	CHIMNEY
CHNLS	CHANNELS
C.I.	CURB INLET
CI	CAST IRON
CIP	CAST-IN-PLACE
CIR	CIRCULAR
CJ	CONTROL JOINT (OR CONSTRUCTION JOINT)
CKD	CHECKED
CKT	CIRCUIT
CKT BRK OR CB	CIRCUIT BREAKER
C OR CL	CENTER LINE
CLG	CEILING
CLKG	CAULKING
CLO	CLOSET
CLOS	CLOSED
CL WG	CLEAR WIRE GLASS
CMP	CORRUGATED METAL PIPE
CMU	CONCRETE MASONRY UNITS
CNTR	COUNTER
CO	CLEANOUT
C.O.	CONTRACTING OFFICER
CO_2	CARBON DIOXIDE
COL	COLUMN
COM	COMMON
COMB	COMBINATION
COMB	COMBUSTION
COMP	COMPRESSIBLE
CONC.	CONCRETE
CONC/P	CONCRETE PAINTED

C (CONT.)

CONC/S	CONCRETE SEALED
CONN	CONNECTION
CONSTR	CONSTRUCTION
CONT.	CONTINUOUS
COR	CORNER
CORR	CORRIDOR
COV	COVERED
CPL	CEMENT PLASTER
C.P.S.	CYCLES PER SECOND (HERTZ)
CPT	CARPET
CRES	CORROSIVE RESISTANT STEEL
CRG	CARRIAGE
CRSE	COURSE
	COUNTER SINK
CSMT	CASEMENT
CT	CERAMIC TILE OR CURRENT TRANSFORMER
CTR	CENTER
CU	CONDENSING UNIT
CUH	CABINET UNIT HEATER
CU YD	CUBIC YARDS
CV	CEILING VENT
CW	COLD WATER
CYL	CYLINDER

D

D	PENNY (as in nail - I Od)
d	DATUM
DA	DOUBLE ACTING
DB	DRY BULB
DBL	DOUBLE
DC	DIRECT CURRENT
D.C.J.	DOWELED CONTROL JOINT
DCJ	DUMMY CONTROL JOINT
DCL	DOOR CLOSER
DEG	DEGREE
DEPR	DEPRESSION
DEPT	DEPARTMENT
DET	DETAIL
DH	DOUBLE HUNG
DH	DUCT HEATER
DIA OR Ø	DIAMETER
DIAG	DIAGONAL
DIM	DIMENSION
DISC	DISCONNECT
DIST	DISTRIBUTION
D & M	DRESSED & MATCHED
DN	DOWN
DP	DAMPPROOFING
DR	DOOR
DRN	DRAIN
DWG	DRAWING
DWLS	DOWELS
DX	DIRECT EXPANSION

E

E	EAST
EA.	EACH
EA	EXHAUST AIR
EAT	ENTERING AIR TEMPERATURE
EIFS	EXTERIOR INSUL. & FINISH SYSTEM
EJ	EXPANSION JOINT
EL OR ELEV.	ELEVATION-GRADE OR BUILDING
ELEC.	ELECTRIC OR ELECTRICAL
ELEV	ELEVATOR
EMCS	ENERGY MGMT CONTROL SYSTEM
EMD	ESTIMATED MAXIMUM DEMAND
ENCL	ENCLOSURE
ENT	ENTRANCE
E.P.	EXPLOSION PROOF
EP	EPOXY PAINT
EQ.	EQUAL
EQUIP.	EQUIPMENT
EST	ESTIMATE
EWT	ENTERING WATER TEMPERATURE
EXC	EXCAVATE
EXD	EXIT DEVICE
EXH	EXHAUST
EXIST.	EXISTING
EXP	EXPOSED
EXPL	EXPLOSION
EXPN	EXPANSION
EXT	EXTERIOR

F

F	FLOOR MATERIAL COLOR
F	FAHRENHEIT
FA	FRESH AIR
FC	FOOT CANDLE
FCG	FACING
FCJ	FLOOR CONSTRUCTION JOINT
FCO	FLOOR CLEANOUT
FD	FLOOR DRAIN
F.D.	FIRE DAMPER

F (CONT.)

FDN	FOUNDATION
FE	FIRE EXTINGUISHER
FEB	FIRE EXTINGUISHER BRACKET
FEC	FIRE EXTINGUISHER CABINET
FH	FIRE HYDRANT
FHC	FIRE HOSE CABINET
FIG.	FIGURE
FIN.	FINISH
FIX.	FIXTURE
FL OR FLR	FLOOR
FLASH	FLASHING
FLEX	FLEXIBLE
FLG	FLOORING
FLUOR	FLUORESCENT
F.O.	FINISH OPENING
FP	FIRE PROTECTION
FPM	FEET PER MINUTE
FPRF	FIRE PROOF
FR	FRAME
FRG	FURRING
F.S.	FULL SIZE
FS	FLOOR SINK
FT.	FEET
FTG	FOOTING
FW	FIRE WATER

G

G	GAS
GA	GAGE OR GAUGE
GAL	GALLON
GALV	GALVANIZED
G.C.O.	GROUND CLEANOUT
GEN	GENERAL
GFE/CI	GOVERNMENT FURNISHED EQUIPMENT CONTRACTOR INSTALLED
GFE/GI	GOVERNMENT FURNISHED EQUIPMENT GOVERNMENT INSTALLED
GFE	GOVERNMENT FURNISHED EQUIPMENT
G.F.I. OR GFI	GROUND FAULT INTERRUPTOR
GI	GALVANIZED IRON
GL	GLASS
GND OR GRND	GROUND
GOVT.	GOVERNMENT
GPM	GALLONS PER MINUTE
GR	GRADE
GRS	GALVANIZED RIGID STEEL CONDUIT
GRTG	GRATING
GSU	GLAZED STRUCTURAL UNITS
GWB	GYPSUM WALLBOARD
GWT	GLAZED WALL TILE
GYP	GYPSUM

H

HB	HOSE BIBB
HBD	HARDBOARD
HC	HANDICAPPED
HD	HEAD
HDR	HEADER
HDRL	HANDRAIL
HDW	HARDWIRE
HM	HOLLOW METAL
HP	HORSE POWER
HIP	HIGH PRESSURE
H.PT.	HIGH POINT
HR	HOUR
H.S.	HIGH STRENGTH
HT	HEIGHT
HTG	HEATING
HTR	HEATER
HW	HOT WATER
HWC	HOT WATER CIRCULATING
HYD	HYDRAULIC
HZ	HERTZ

I

I OR EF	IRON
IC	INTERCOM
I.D.	INSIDE DIAMETER
IES	ILLUMINATING ENGINEERING SOCIETY
IN	INCH
INSUL.	INSULATION
INT.	INTERIOR
I.E.	INVERT ELEVATION
I.P.	IRON PIPE

J

JB OR J-BOX	JUNCTION BOX
JC	JANITOR CLOSET
JCT	JUNCTION
JST	JOIST
JT	JOINT

K

K	KEY
Kcmil or KCM	KILO CIRCULAR MIL
KIP	KILOPOUND
KL	KEY LOCK
KP	KICK PLATE
KV	KILOVOLTS
KVA	KILOVOLTS AMPERES
Kvar	KILOVOLT AMPERES REACTIVE
KW	KILOWATT

L

L	LUMEN
LAB	LABORATORY
LAM	LAMINATED FINISH/PLASTICLAMINATE
LAN	LOCAL AREA NETWORK
LAT	LEAVING AIR TEMPERATURE
LAU	LAUNDRY
LBR	LUMBER
LBS, #	POUNDS, POUND
LD	LOAD
LDG	LOADING
LG	LENGTH
LIN	LINEAR
LIS	LAWN IRRIGATION SYSTEM
LOC	LOCATION
LONG	LONGITUDINAL
LP	LOW POINT
LPS	LIGHT PROOF SHADE
L.R.	LONG RADIUS
LT	LIGHT
LTG	LIGHTING
LWT	LEAVING WATER TEMPERATURE

M

M	THOUSAND
MACH	MACHINE
MAS	MASONRY
MAT OR MAT'L	MATERIAL
MAT	ENTRY MAT
MAU	MAKE-UP AIR UNIT
M & B	MATCHED & BEADED
MBD	MARKERBOARD
MBM	METAL BUILDING MANUFACTURER
MCJ	MASONRY CONTROL JOINT
MECH	MECHANICAL
MER	MECHANICAL EQUIPMENT ROOM
MET OR MTL.	METAL
MEZZ	MEZZANINE
MFG	MANUFACTURING
MFR	MANUFACTURE(R)
MG	MOTOR GENERATOR
MGT	MATTE - GLAZED TILE
MH	MANHOLE
MIN	MINIMUM
ML	METAL LATH
MLDG	MOULDING
MO	MASONRY OPENING
MONO	MONOLITHIC
MOT	MOTOR
MR	MOISTURE RESISTANT
MSTC	MASTIC
MTD	MOUNTED

N

N	NORTH
NA	NOT APPLICABLE
N.C.	NORMALLY CLOSED
NEC	NATIONAL ELECTRIC CODE
NEMA	NATIONAL ELECTRICAL MANUFACTURERS ASSOCIATION
NFPA	NATIONAL FIRE PROTECTION ASSOCIATION
NIC	NOT IN CONTRACT
NO	NUMBER
N.O.	NORMALLY OPEN
N.R.	NOT REQUIRED

O

OA	OUTSIDE AIR
OBSC	OBSCURE
OB WG	OBSCURE WIRE GLASS
OC	ON CENTERS
OCEW	ON CENTERS EACH WAY
OD	OUTSIDE DIAMETER
OFF.	OFFICE
OHC	OVERHEAD COILING
OHE	OVERHEAD ELECTRICAL
OPNG	OPENING
OPP	OPPOSITE
OPP.H.	OPPOSITE HAND
OPS	OPERATIONS
O.R.	OBSERVATION RISER
OS & Y	OUTSIDE SCREW & YOKE

P

P	PAINT
P	POLE
PA	PUBLIC ADDRESS
PBS	PUSH BUTTON STATION
PC	PIECE
PC	PRECAST
PD	PAVEMENT DRAIN
PERF	PERFORATED
PH OR Ø	PHASE
PI	POINT OF INTERSECTION
P.I.V.	POST INDICATING VALVE
PL OR P ⌊	PLATE
PLAS	PLASTER
PLATF	PLATFORM
PLBG.	PLUMBING
PLG	PILING
PLY.WD.	PLYWOOD
PMWP	PERFORATED METAL WALL PANEL

P (CONT.)

PNL	PANEL
POL	POLISH
PORC	PORCELAIN
P.P.M.	PARTS PER MILLION
PR	PAIR
PREFAB	PREFABRICATED
PREFIN	PREFINISHED
PROJ	PROJECT
PRV	PRESSURE REGULATING VALVE
P.S.	PRESSED STEEL
PSF	POUNDS/SQUARE FOOT
PSI	POUNDS/SQUARE INCH
PT	POINT or POTENTIAL (VOLTAGE) TRANSFORMER
PTD	PAINTED
PTN	PARTITION
PVC	POLYVINYL-CHLORIDE
PVMT	PAVEMENT
PW	PASS WINDOW

Q

QT	QUART
Q.T.	QUARRY TILE
QTRS	QUARTERS

R

R OR RSR	RISER
RA	RETURN AIR
RAD OR R	RADIUS
RAG	RETURN AIR GRILLE
RAR	RETURN AIR REGISTER
RB	RESILIENT BASE
RC	REMOTE CONTROL
RCVR	RECEIVER
RD OR Ø	ROUND
R.D.	ROOF DRAIN
RECP	RECEPTACLE
RECR	RECREATION
RECT.	RECTIFIER
REF	REFERENCE
REFR	REFRIGERATOR
REG	REGISTER
REINF	REINFORCEMENT
REM	REMOVABLE
REQD	REQUIRED
RESIL.	RESILIENT
REV	REVISIONS
RFG	ROOFING
RGE	RANGE
RGH	ROUGH
RM	ROOM
R.O.	ROUGH OPENING
RPM	REVOLUTIONS PER MINUTE
RPRT	RAISED PATTERN RUBBER TILE
RST	RESILIENT STAIR SYSTEM
RUB	RUBBER

S

S	SOUTH
SA	SUPPLY AIR
SCH	SCHEDULE
SCR	SCREW
SCT	STRUCTURAL CLAY TILE
SCUT	SCUTTLE
SD	STORM DRAIN
SDI	STEEL DECK INSTITUTE
SDL	STORM DRAIN LEADER
SDVT	STATIC DISSIPATIVE VINYL TILE
SJI	STEEL JOIST INSTITUTE
SECT	SECTION
SECY	SECRETARY
SEQ	SEQUENCE
SHLD.	SHOULDER
SHT.	SHEET
SHTG	SHEATHING
SIM	SIMILAR
SM	SQUARE METER
S/O	SAND/OIL
SP	STATIC PRESSURE
SPEC	SPECIFICATIONS
SPF	SOUNDPROOF
SPH	SPACE HEATER
SPKR	SPEAKER
SPL	SPECIAL
SQ OR □	SQUARE
SS	SANITARY SEWER
SSSMR	STRUCTURAL STANDING SEAM METAL ROOF
S. STL OR SS	STAINLESS STEEL
STA	STATION
STD	STANDARD
STGR	STRINGER
STL	STEEL
STOR	STORAGE
STR OR STRUCT	STRUCTURAL

S (CONT.)

STWY	STAIRWAY
SUB FL	SUB FLOOR
SUSP	SUSPENDED
SW	SWITCH
SWBD	SWITCHBOARD
SYM	SYMMETRICAL

T

T/TR	THREAD/THREADS
TAN	TANGENT
TBD	TACK BOARD
TEL	TELEPHONE
TEMP	TEMPERATURE
TERM	TERMINAL
TGL	TOGGLE
TH	THRESHOLD
THK	THICK
TLP	TRANSLUCENT PANEL
T.O.	TOP OF
TOIL	TOILET
T.O.M.	TOP OF MASONRY
TOPO	TOPOGRAPHY
TP	TOILET PARTITION
TRANS	TRANSVERSE
T'STAT	THERMOSTAT
TV	TELEVISION
TYP	TYPICAL

U

UC	UNIT COOLER
UG	UNDERGROUND
UGE	UNDERGROUND ELECTRICAL
UH	UNIT HEATER
UL	UNDERWRITERS LABORATORIES
UNEX	UNEXCAVATED
UNFIN	UNFINISHED
U.N.O	UNLESS NOTICED OTHERWISE
UPS	UNINTERRUPTABLE POWER SYSTEM
UT	UTILITY

V

V	VOLT
VCP	VITRIFIED CLAY PIPE
VCT	VINYL COMPOSITION TILE
VD	VOLUME DAMPER
VERT	VERTICAL
VEST	VESTIBULE
VOL	VOLUME
VT	VINYL TILE OR VOLTAGE TRANSFORMER
VTR	VENT THRU ROOF

W

W	WALL FINISHES
W	WEST
W	WIRE
W/	WITH
WB	WET BULB
WD	WOOD
W.D.	WASTE DRAIN
WD. BLK.	WOOD BLOCKING
WD. DR.	WOOD DOOR
WDW	WINDOW
WF	WIDE FLANGE
WG	WIRE GLASS OR WATER GAGE
WH	WALL HYDRANT
WHM	WATTHOUR METER
WHT	WHITE
W.I.	WROUGHT IRON
WKSH	WORK SHOP
WM	WATERPROOF MEMBRANE
WNSCT	WAINSCOT
W/O	WITHOUT
WP	WEATHER PROOF
WPF	WATER PROOF
WPFG	WATER PROOFING
WR	WATER RESISTANT
WRB	WARDROBE
WT	WEIGHT
WWF	WELDED WIRE FABRIC
WWM	WOVEN WIRE MESH

X

XFMR	TRANSFORMER

Y

YD	YARD
Y.D.	YARD DRAIN

GENERAL NOTES:

1. THESE ABBREVIATIONS ARE STANDARD AND ARE PERTINENT TO THE CONDITIONS ON THIS SET OF DRAWINGS TO THE EXTENT APPLICABLE.
2. NOT ALL ABBREVIATIONS ARE NECESSARILY USED IN THIS SET OF DRAWINGS.
3. ADDITIONAL ABBREVIATIONS MAY APPEAR IN THIS SET OF DRAWINGS TO INDICATE SPECIFIC CONDITIONS THAT MAY OR MAY NOT BE LISTED HERE.

REGISTERED ARCHITECT
Robin Earl Henry
2515
Greenwood, MS
STATE OF MISSISSIPPI

THE Johnson McAdams FIRM P.A.
ARCHITECTS/ENGINEERS PLANNING SURVEYING MANAGEMENT
P.O. BOX 513, GREENWOOD, MISSISSIPPI - (662) 455-4943

NO.	DATE	BY	DESCRIPTION

REVISIONS

A-E FIRM	USDA
PROJECT MANAGER: REH	EPM: WN
DESIGNER: JLF	PPM: XXX
CHECKED BY: DRL	SAFETY & HEALTH: CM
JOB #: 5825	REAL PROPERTY: JS

USDA Agricultural Research Service

USDA AGRICULTURAL RESEARCH SERVICE
SUGARCANE RESEARCH LABORATORY
HOUMA, LOUISIANA

ARCHITECTURAL GRAPHICS & ABBREVIATIONS

PROJECT NO. XXX
DATE 05/20/2026

AGRICULTURAL RESEARCH SERVICE
FACILITIES ENGINEERING BRANCH
5106 SUNNYSIDE AVENUE
BELTSVILLE, MD 20705-5100

SHEET A-001
35 OF 176

C:\Users\MICHAE~1\AppData\Local\Temp\AcPublish_28588\A001.dwg
May 20, 2026 – 8:31am

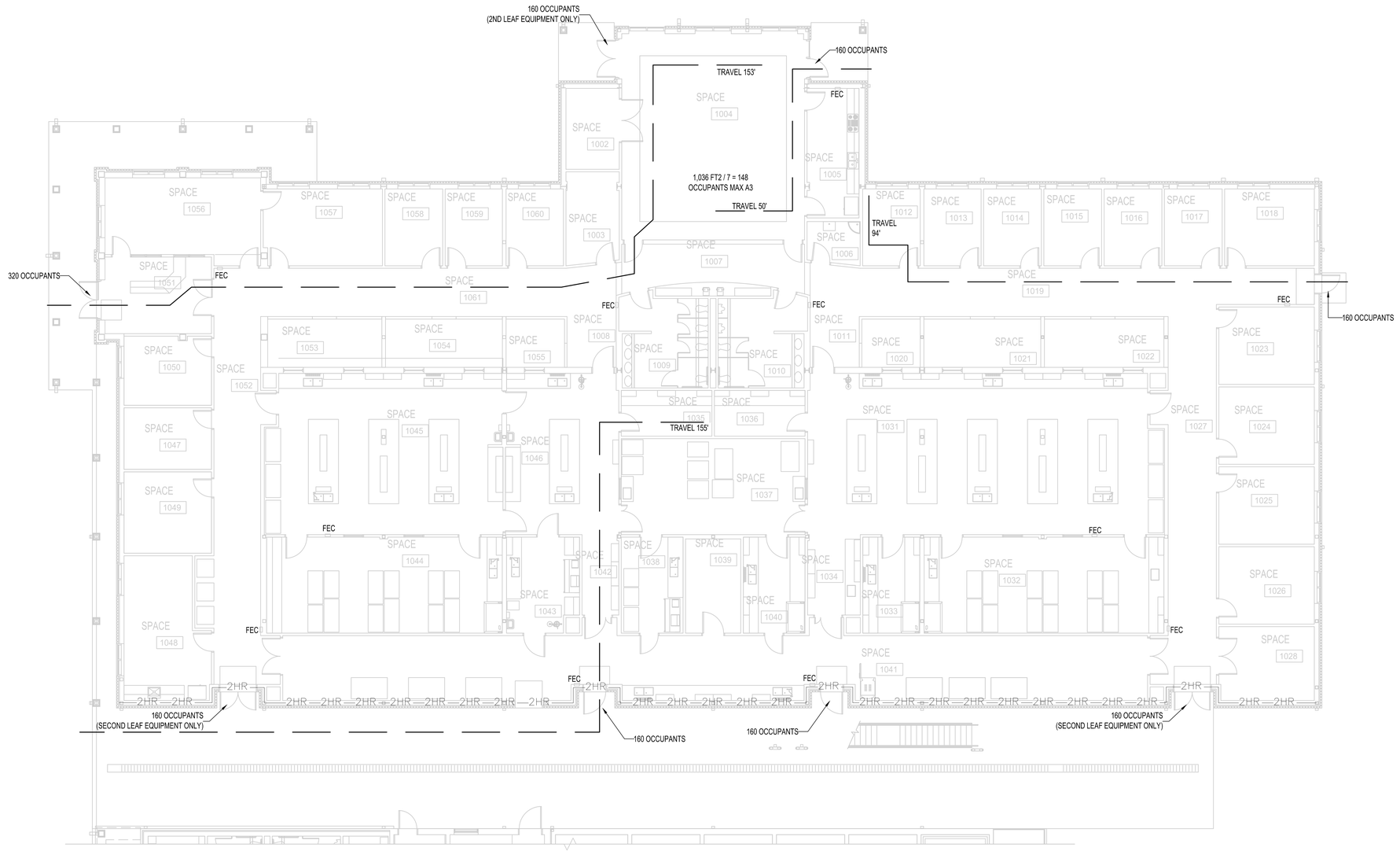

ROOM LEGEND

ROOM NO	ROOM NAME
1002	STORAGE
1003	STORAGE
1004	MEETING ROOM
1005	PREP
1006	JANITORIAL
1007	CORRIDOR
1008	CORRIDOR
1009	WOMEN
1010	MEN
1011	CORRIDOR
1012	OFFICE
1013	OFFICE
1014	OFFICE
1015	OFFICE
1016	OFFICE
1017	OFFICE
1018	SMALL CONFERENCE
1019	CORRIDOR
1020	TECH OFFICE
1021	TECH OFFICE
1022	TECH OFFICE
1023	CAT 3 OFFICE
1024	CAT 3 OFFICE
1025	TECHNICIAN OFFICE
1026	TECHNICIAN OFFICE
1027	CORRIDOR
1028	STORAGE
1031	PLANT PHYSIOLOGY / SOILS
1032	SUPPORT
1033	SUPPORT
1034	HALL
1035	SCOPE
1036	SCOPE
1037	SHARED EQUIPMENT ROOM
1038	SUPPORT
1039	STORAGE
1040	SUPPORT
1041	SERVICE / UTILITY CORRIDOR
1042	HALL
1043	BSL-2 LABORATORY
1044	SUPPORT
1045	PATHOLOGY / MOLECULAR GENETICS (CLEAN)
1046	PATHOLOGY / MOLECULAR GENETICS (DIRTY)
1047	FILES
1048	BREAK ROOM
1049	POST-DOC / TECHICAL OFFICE
1050	MAIL / WORK ROOM
1051	ENTRY LOBBY
1052	CORRIDOR
1053	TECH OFFICE
1054	TECH OFFICE
1055	TECH OFFICE
1056	PROGRAM ASSISTANT
1057	RESEARCH LEADER
1058	OFFICE
1059	OFFICE
1060	OFFICE
1061	CORRIDOR

1 A-002 FIRST FLOOR LIFE SAFETY PLAN

SCALE: 1/8"=1'-0"

PLAN NORTH

TRUE NORTH

CODE SYNOPSIS

MANDATORY CODES AND STANDARDS:

APPLICABLE CODE LIST:

1. AMERICAN NATIONAL STANDARDS INSTITUTE
   - A. ANSI A117.1 - ACCESSIBLE AND USABLE BUILDINGS AND FACILITIES
   - B. ANSI Z535.1 - SAFETY COLOR CODE
   - C. ANSI Z9.5 - LABORATORY VENTILATION
2. INTERNATIONAL BUILDING CODE, 2024
3. NFPA 1 FIRE CODE (FOR FEDERAL BUILDINGS) 2024
4. ISC - SECURITY DESIGN CRITERIA FOR NEW FEDERAL OFFICE BUILDINGS AND MAJOR MODERNIZATION PROJECTS
5. NATIONAL FIRE PROTECTION ASSOCIATION
   - A. NFPA 10 - STANDARD FOR PORTABLE FIRE EXTINGUISHERS
   - B. NFPA 13 - STANDARD FOR THE INSTALLATION OF SPRINKLER SYSTEMS
   - C. NFPA 30 - FLAMMABLE AND COMBUSTIBLE LIQUIDS CODE
   - D. NFPA 37 - STANDARD FOR THE INSTALLATION AND USE OF STATIONARY COMBUSTION ENGINES AND GAS TURBINES
   - E. NFPA 45 - STANDARD ON FIRE PROTECTION FOR LABORATORIES USING CHEMICALS
   - F. NFPA 54 - NATIONAL FUEL GAS CODE
   - G. NFPA 55 - STANDARD FOR THE STORAGE, USE, AND HANDLING OF COMPRESSED GASES AND CRYOGENIC FLUIDS IN PORTABLE AND STATIONARY CONTAINERS, CYLINDERS, AND TANKS
   - H. NFPA 70 - NATIONAL ELECTRICAL CODE
   - I. NFPA 72 - NATIONAL FIRE ALARM AND SIGNALING CODE
   - J. NFPA 80 - STANDARD FOR FIRE DOOR AND FIRE WINDOWS
   - K. NFPA 90A - STANDARD FOR THE INSTALLATION OF AIR-CONDITIONING AND VENTILATING SYSTEMS
   - L. NFPA 101 - LIFE SAFETY CODE
   - M. NFPA 110 - STANDARD FOR EMERGENCY AND STANDBY POWER SYSTEMS
   - N. NFPA 220 - STANDARD ON TYPES OF BUILDING CONSTRUCTION
   - O. NFPA 221 - STANDARD FOR FIRE WALLS AND FIRE BARRIER WALLS
   - P. NFPA 395 - STANDARD FOR THE STORAGE OF FLAMMABLE LIQUIDS AT FARMS AND ISOLATED SITES
   - Q. NFPA 434 - CODE FOR THE STORAGE OF PESTICIDES
   - R. NFPA 704 - STANDARD SYSTEM FOR THE IDENTIFICATION OF THE HAZARDS OF MATERIALS FOR EMERGENCY RESPONSE
   - S. NFPA 780 - STANDARD FOR THE INSTALLATION OF LIGHTNING PROTECTION SYSTEMS
10. UNIFORM FEDERAL ACCESSIBILITY STANDARDS
11. ADDAG - AMERICANS WITH DISABILITIES ACT.
12. GUIDELINES:
    - A. ASAE - AMERICAN SOCIETY OF AGRICULTURAL ENGINEERS, STANDARDS APPLICABLE TO GREENHOUSES
    - B. ARS FACILITIES DESIGN STANDARDS, MANUAL 242.1
    - C. ASHRAE
    - D. CDC/NIH BIOSAFETY IN MICROBIOLOGICAL AND BIOMEDICAL LABORATORIES
    - E. CDC/NIH PRIMARY CONTAINMENT FOR BIOHAZARDS: SELECTION, INSTALLATION AND USE OF BIOLOGICAL SAFETY CABINETS
    - F. NGMA - NATIONAL GREENHOUSE MANUFACTURERS ASSOCIATION, STANDARDS

FACILITY SIZE	LAB/OFFICE (INSIDE EXT WALLS) (SF)	EXT. WALLS (SF)	ROOF LINE (SF)
FIRST FLOOR	~16,870 / 150 = 119 OCCUPANTS FOR BUSINESS (LESS WITH LABS) ~1,036 / 7 = 148 OCCUPANTS FOR ASSEMBLY	~18,700	20,550
SECOND FLOOR	~3,750		
TOTAL	21,603		
ALLOWABLE AREA	23,000FT2 X 3 WITH SPRINKLERS = 69,000 FT2		
TOTAL STORIES ALLOWED	2 4		
FIRE SPRINKLERS	YES		
OCCUPANCY	GROUP B		
CONSTRUCTION TYPE	IIB		
OCCUPANCY SEPARATIONS	2-HOUR AT LAB BUILDING FROM CANOPY AND HEADHOUSE		

ACCESSIBILITY — ALL FIRST FLOOR AREAS ARE ACCESSIBLE. SECOND FLOOR STORAGE AND BUILDING SERVICE AREAS ARE ACCESSIBLE BY STAIRS ONLY.

ALLOWABLE:

TOTAL TRAVEL	300'
DEAD ENDS	50'
COMMON PATH OF TRAVEL	100'

OCCUPANT EGRESS — OCCUPANT LOAD (EXCLUDING DOUBLE LEAF DOORS FOR EQUIPMENT ONLY 8 EXIT LOCATIONS ALLOWING FOR 1,440 OCCUPANTS ON GROUND FLOOR.

OCCUPANT LOAD — 267 (SEE ABOVE)

LEGEND

EXIT PATHS. EXITS WILL ACCOMMODATE MAXIMUM OCCUPANT LOAD.

2HR — 2HR — 2-HOUR FIRE BARRIER WITH 1.5-HOUR DOORS (REQUIRED DUE TO OPTION OF COVERED CANOPY BETWEEN BUILDINGS OMITTING IMAGINARY PROPERTY LINE SEPARATION.) ALSO REQUIRED FOR CONNECTOR AND FOR 10' ON BOTH SIDES OF CONNECTOR WALKWAY. CONNECTOR WALKWAY AND CANOPY MUST NOT BE STRUCTURALLY TIED INTO THE NEW LAB BUILDING TO ALLOW THESE TO BE INDEPENDENT BUILDINGS.

FEC — RECESSED FIRE EXTINGUISHER CABINET (FEC) FIRE EXTINGUISHER BRACKET AND CABINET SHALL ACCOMMODATE 10-POUND A-B-C DRY CHEMICAL TYPES. CABINETS SHALL HAVE FLAT PARTIAL GLASS FRONT WITH HINGED LATCHING DOOR. MOUNT TOP OF EXTINGUISHER AT 48" AFF PER ADA/UFAS REQUIREMENTS.

CLASSIFICATION AND SEPARATION OF LAB UNITS PER NFPA 45:

1. PER THE USER THE BUILDING WILL HAVE LESS THAN 75 GALLONS OF FLAMMABLE LIQUID, WITH LIKELY LESS THAN 20 GALLONS FOR ENTIRE BUILDING.
2. LABS CLASS "D" PER 2024 NFPA 45, 9.1.
3. FLAMMABLES WILL BE STORED IN CABINETS.
4. QUANTITY PER LAB TO BE LESS THAN 5 GALLONS.
5. IN ACCORDANCE WITH 2024 NFPA 45, 5.1.2 A SINGLE CLASS C OR CLASS D LABORATORY UNIT ON A FLOOR SHALL NOT BE REQUIRED TO HAVE FIRE SEPARATIONS.
6. BASED ON INFORMATION OF USER, THE ENTIRE CENTER LAB AREA CAN BE CONSIDERED ONE LABORATORY UNIT, AND THUS IS NOT REQUIRED TO HAVE A RATED SEPARATION PER 5.1.2.

8' 0 4' 8'

SCALE: 1/8" = 1'-0"

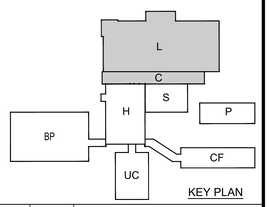

KEY PLAN

Johnson, Mirmiran & Adams, Inc. ARCHITECTS/ENGINEERS PLANNERS SURVEYING MANAGEMENT P.O. BOX 513, GREENWOOD, MISSISSIPPI (662) 455-6643

NO.	DATE	BY	DESCRIPTION

REVISIONS

Registered Professional Engineer & Land Surveyor CERTIFICATE NO. 37345 SCOTT WADE LACEY ARIZONA USA 05/20/2026

USDA Agricultural Research Service

USDA AGRICULTURAL RESEARCH SERVICE
SUGARCANE RESEARCH LABORATORY
HOUMA, LOUISIANA

FIRST FLOOR LIFE SAFETY PLAN
LAB/OFFICE

A-E FIRM	USDA
PROJECT MANAGER	REH
EPM	WN
DESIGNER	SWL
PPM	XXX
CHECKED BY	BT/DW
SAFETY & HEALTH	CM
JOB #	5825
REAL PROPERTY	JS

PROJECT NO. XXX	AGRICULTURAL RESEARCH SERVICE FACILITIES ENGINEERING BRANCH 5106 SUNNYSIDE AVENUE BELTSVILLE, MD 20705-5100	SHEET A-002
DATE 05/20/2026		36 OF 176

D:\Client\Client 2025\Johnson Mirmiran\USDA Lab Houma LA\dwg\Houma Lab – A-002 FIRST FLOOR LIFE SAFETY PLAN.dwg
May 19, 2026 - 4:42pm

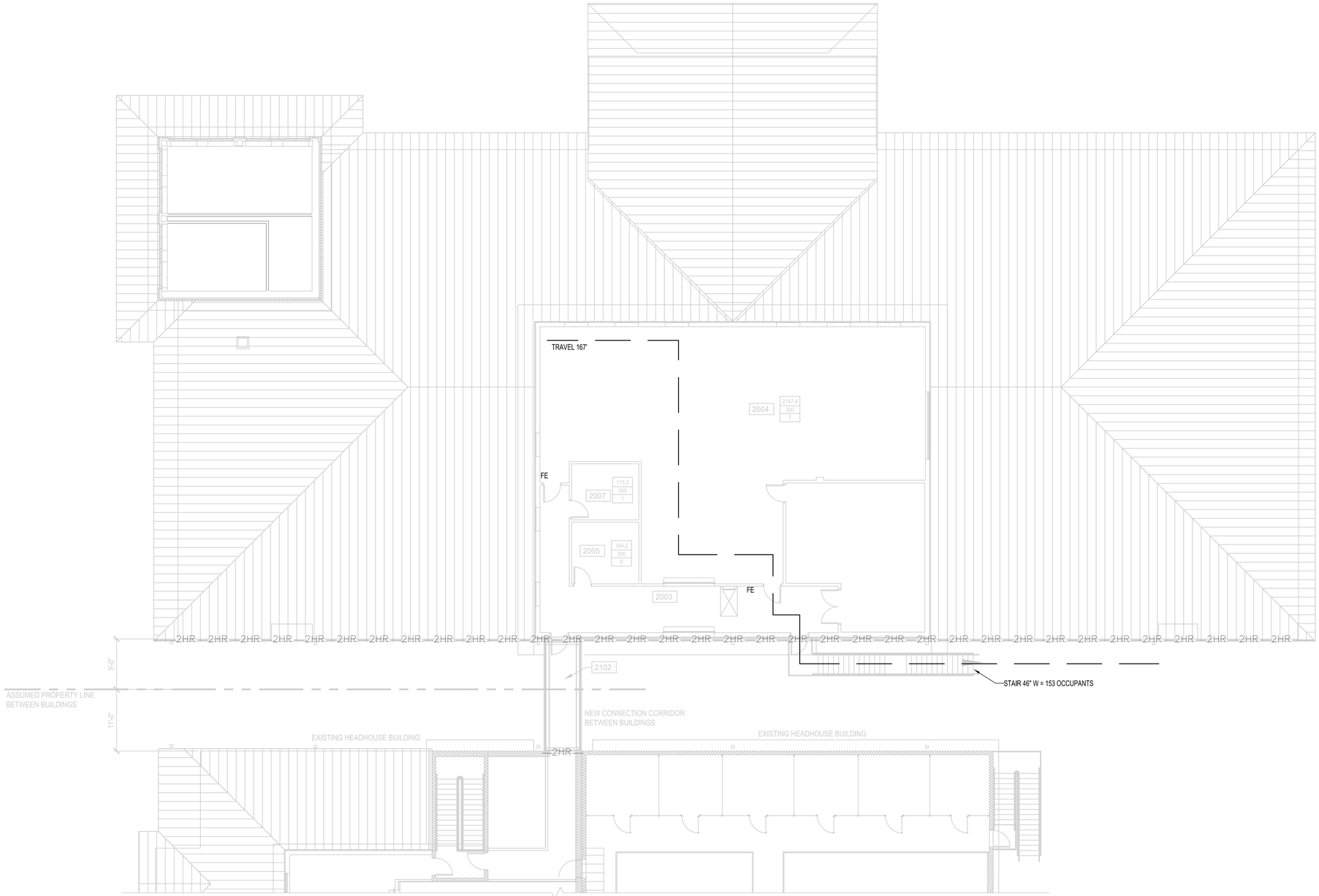

ROOM LEGEND

ROOM NO	ROOM NAME
2003	SERVICE / UTILITY CORRIDOR
2004	MECHANICAL PENTHOUSE
2005	COMMUNICATIONS
2006	ELECTRICAL ROOM
2007	STORAGE
2102	CORRIDOR

1 A-003 SECOND FLOOR LIFE SAFETY PLAN
SCALE: 1/16"=1'-0"

PLAN NORTH TRUE NORTH

8' 0 4' 8'
SCALE: 1/8" = 1'-0"

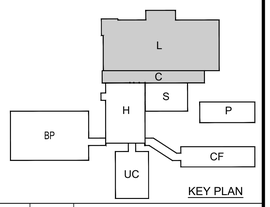

KEY PLAN

NO.	DATE	BY	DESCRIPTION

REVISIONS

Johnson McAdams
ENGINEERS ENGINEERING PLANNING SURVEYING MANAGEMENT
P.O. BOX 515, GREENWOOD, MISSISSIPPI - (662) 455-6943

A-E FIRM	USDA
PROJECT MANAGER REH	EPM WN
DESIGNER SWL	PPM XXX
CHECKED BY BT/DW	SAFETY & HEALTH CM
JOB # 5825	REAL PROPERTY JS

USDA Agricultural Research Service

USDA AGRICULTURAL RESEARCH SERVICE
SUGARCANE RESEARCH LABORATORY
HOUMA, LOUISIANA

SECOND FLOOR LIFE SAFETY PLAN
LAB/OFFICE

PROJECT NO. XXX
DATE 05/20/2026

AGRICULTURAL RESEARCH SERVICE
FACILITIES ENGINEERING BRANCH
5106 SUNNYSIDE AVENUE
BELTSVILLE, MD 20705-5100

SHEET A-003
37 OF 176

Registered Professional Engineer - Fire Protection
CERTIFICATE NO. 37345
SCOTT WADE LACEY
5/20/26
ARIZONA, USA

D:\Client\Client 2025\Johnson McAdams\USDA Lab Houma LA\dwg\Houma Lab - A-003 SECOND FLOOR LIFE SAFETY PLAN.dwg
May 19, 2026 - 4:42pm

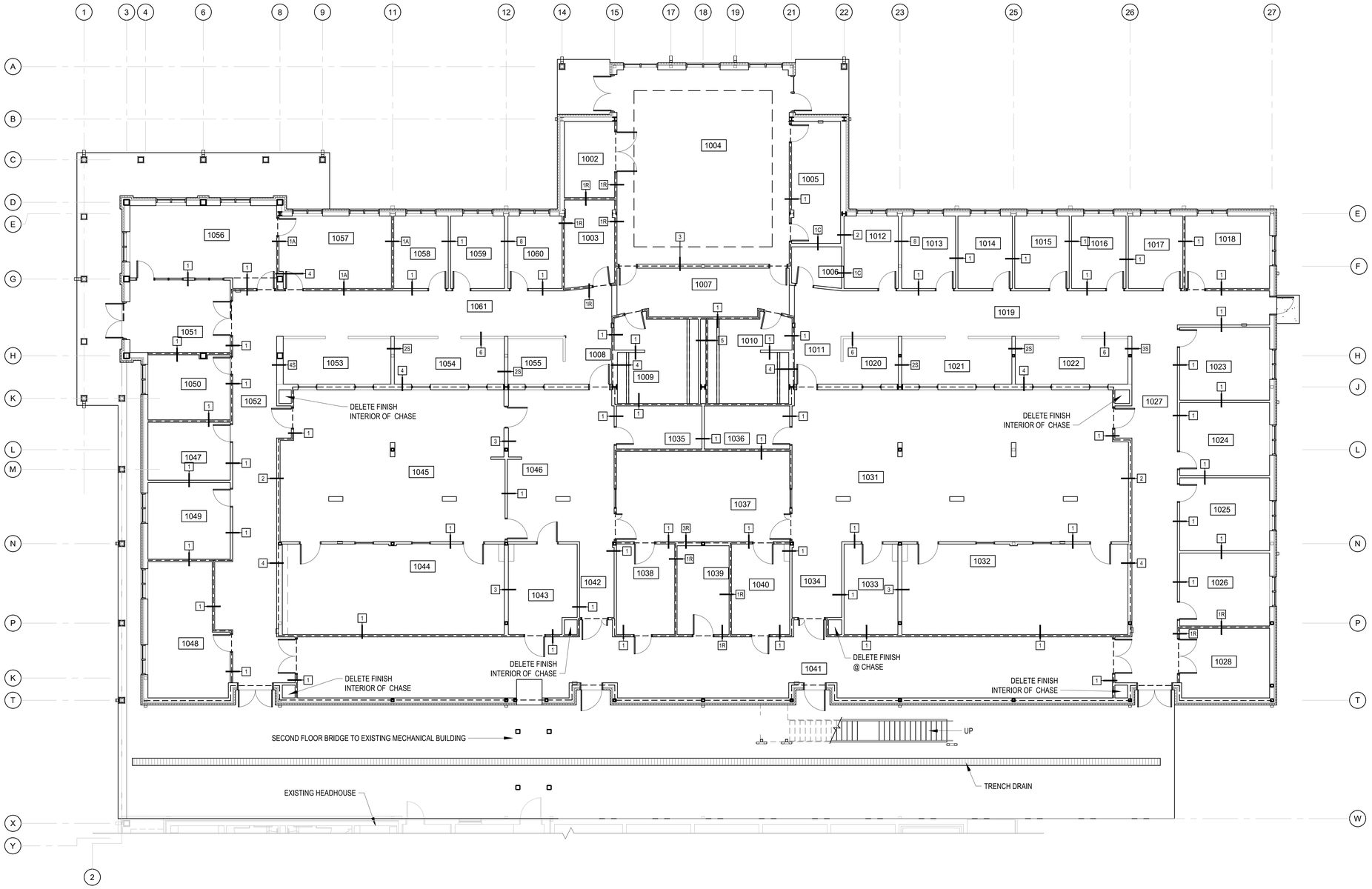

ROOM LEGEND

ROOM NO	ROOM NAME
1002	STORAGE
1003	STORAGE
1004	MEETING ROOM
1005	PREP
1006	JANITORIAL
1008	CORRIDPOR
1009	WOMEN
1010	MEN
1011	CORRIDOR
1012	OFFICE
1013	OFFICE
1014	OFFICE
1015	OFFICE
1016	OFFICE
1017	OFFICE
1018	SMALL CONFERENCE
1019	CORRIDOR
1020	TECH OFFICE
1021	TECH OFFICE
1022	TECH OFFICE
1023	CAT 3 OFFICE
1024	CAT 3 OFFICE
1025	TECHNICIAN OFFICE
1026	TECHNICIAN OFFICE
1027	CORRIDOR
1028	STORAGE
1031	PLANT PHYSIOLOGY / SOILS
1032	SUPPORT
1033	SUPPORT
1034	HALL
1035	SCOPE
1036	SCOPE
1037	SHARED EQUIPMENT ROOM
1038	SUPPORT
1039	STORAGE
1040	SUPPORT
1041	SERVICE / UTILITY CORRIDOR
1042	HALL
1043	BSL-2 LABORATORY
1044	SUPPORT
1045	PATHOLOGY / MOLECULAR GENETICS (CLEAN)
1046	PATHOLOGY / MOLECULAR GENETICS (DIRTY)
1047	FILES
1048	BREAK ROOM
1049	POST-DOC / TECHICAL OFFICE
1050	MAIL / WORK ROOM
1051	ENTRY LOBBY
1052	CORRIDOR
1053	TECH OFFICE
1054	TECH OFFICE
1055	TECH OFFICE
1056	PROGRAM ASSISTANT
1057	RESEARCH LEADER
1058	OFFICE
1059	OFFICE
1060	OFFICE
1061	CORRIDOR

1 A-101.1 FIRST FLOOR PLAN - LAB/OFFICE PARTITION TYPES

SCALE: 1/8"=1'-0"

PLAN NORTH TRUE NORTH

LEGEND

- N — PARTITION TYPE SEE 2/A-401
- EXTEND PARTITION TO UNDERSIDE OF DECK ABOVE
- PARTITIONS EXTEND TO 6" MINIMUM ABOVE CEILING SYSTEM
- 1 HOUR RATED EXTERIOR WALL AS DETAILED

GENERAL NOTES

1. CASEWORK NOT SHOWN FOR CLARITY. DRAWING IS FOR IDENTIFICATION OF PARTITION TYPES.

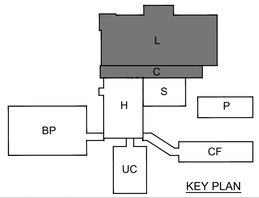

0 4' 8' 16' 24'

SCALE: 1/8"= 1'-0"

KEY PLAN

REGISTERED ARCHITECT Robin Earl Henry 2515 Greenwood, MS STATE OF MISSISSIPPI

NO.	DATE	BY	DESCRIPTION

REVISIONS

THE Johnson McAdams FIRM
ARCHITECTS/ENGINEERS PLANNERS SURVEYORS MANAGEMENT
P.O. BOX 515, GREENWOOD, MISSISSIPPI - (662) 455-6943

USDA Agricultural Research Service

USDA AGRICULTURAL RESEARCH SERVICE
SUGARCANE RESEARCH LABORATORY
HOUMA, LOUISIANA

FIRST FLOOR PLAN
PARTITION TYPES

A-E FIRM	USDA
PROJECT MANAGER REH	EPM WN
DESIGNER JLF	PPM XXX
CHECKED BY DRL	SAFETY & HEALTH CM
JOB # 5825	REAL PROPERTY JS

PROJECT NO. XXX
DATE 05/20/2026

AGRICULTURAL RESEARCH SERVICE
FACILITIES ENGINEERING BRANCH
5106 SUNNYSIDE AVENUE
BELTSVILLE, MD 20705-5100

SHEET A-101.1

C:\Users\MICHAEL~1\AppData\Local\Temp\AcPublish_28588\A101.1.dwg
May 20, 2026 - 8:31am

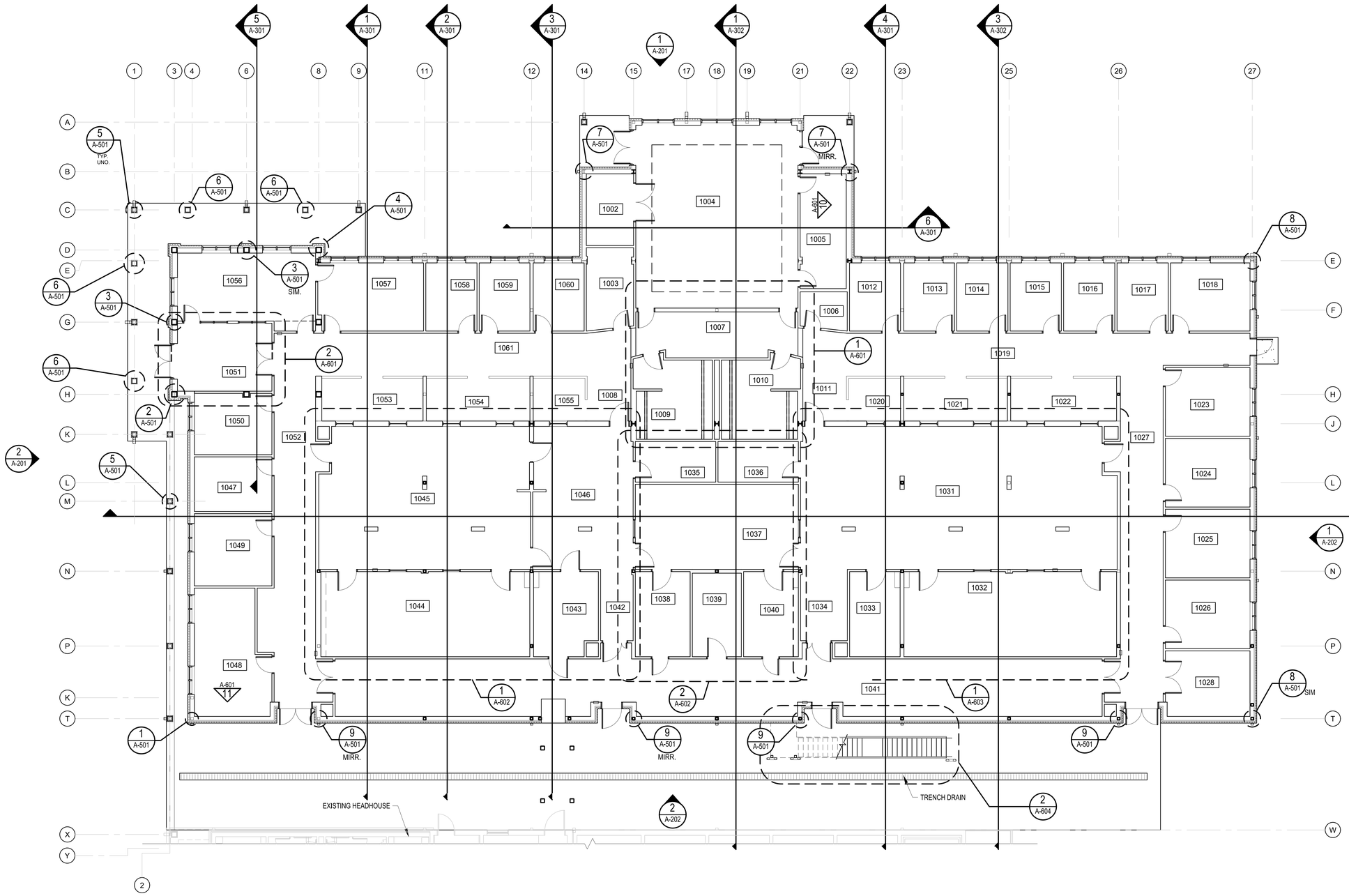

ROOM LEGEND

ROOM NO	ROOM NAME
1002	STORAGE
1003	STORAGE
1004	MEETING ROOM
1005	PREP
1006	JANITORIAL
1008	CORRIDPOR
1009	WOMEN
1010	MEN
1011	CORRIDOR
1012	OFFICE
1013	OFFICE
1014	OFFICE
1015	OFFICE
1016	OFFICE
1017	OFFICE
1018	SMALL CONFERENCE
1019	CORRIDOR
1020	TECH OFFICE
1021	TECH OFFICE
1022	TECH OFFICE
1023	CAT 3 OFFICE
1024	CAT 3 OFFICE
1025	TECHNICIAN OFFICE
1026	TECHNICIAN OFFICE
1027	CORRIDOR
1028	STORAGE
1031	PLANT PHYSIOLOGY / SOILS
1032	SUPPORT
1033	SUPPORT
1034	HALL
1035	SCOPE
1036	SCOPE
1037	SHARED EQUIPMENT ROOM
1038	SUPPORT
1039	STORAGE
1040	SUPPORT
1041	SERVICE / UTILITY CORRIDOR
1042	HALL
1043	BSL-2 LABORATORY
1044	SUPPORT
1045	PATHOLOGY / MOLECULAR GENETICS (CLEAN)
1046	PATHOLOGY / MOLECULAR GENETICS (DIRTY)
1047	FILES
1048	BREAK ROOM
1049	POST-DOC / TECHICAL OFFICE
1050	MAIL / WORK ROOM
1051	ENTRY LOBBY
1052	CORRIDOR
1053	TECH OFFICE
1054	TECH OFFICE
1055	TECH OFFICE
1056	PROGRAM ASSISTANT
1057	RESEARCH LEADER
1058	OFFICE
1059	OFFICE
1060	OFFICE
1061	CORRIDOR

1 A-101.2 FIRST FLOOR PLAN DETAIL REFERENCE
SCALE: 1/8"=1'-0"

PLAN NORTH TRUE NORTH

0 4' 8' 16' 24'
SCALE: 1/8"= 1'-0"

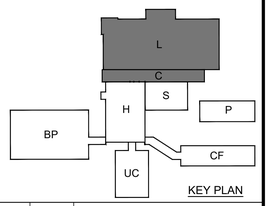

KEY PLAN

NO.	DATE	BY	DESCRIPTION

REVISIONS

Johnson M'Adams
ARCHITECTS/ENGINEERS PLANNING SURVEYING MANAGEMENT
P.O. BOX 515, GREENWOOD, MISSISSIPPI 38930 (662) 455-6943

A-E FIRM	USDA
PROJECT MANAGER REH	EPM WN
DESIGNER JLF	PPM XXX
CHECKED BY DRL	SAFETY & HEALTH CM
JOB # 5825	REAL PROPERTY JS

USDA Agricultural Research Service

USDA AGRICULTURAL RESEARCH SERVICE
SUGARCANE RESEARCH LABORATORY
HOUMA, LOUISIANA

FIRST FLOOR PLAN
DETAIL REFERENCE

PROJECT NO. XXX
DATE 05/20/2026

AGRICULTURAL RESEARCH SERVICE
FACILITIES ENGINEERING BRANCH
5106 SUNNYSIDE AVENUE
BELTSVILLE, MD 20705-5100

SHEET A-101.2
40 OF 176

REGISTERED ARCHITECT
Robin Earl Henry
2515
Greenwood, MS
STATE OF MISSISSIPPI

C:\Users\MCHAE~1\AppData\Local\Temp\AcPublish_28588\A101.2.dwg
May 20, 2026 - 8:31am

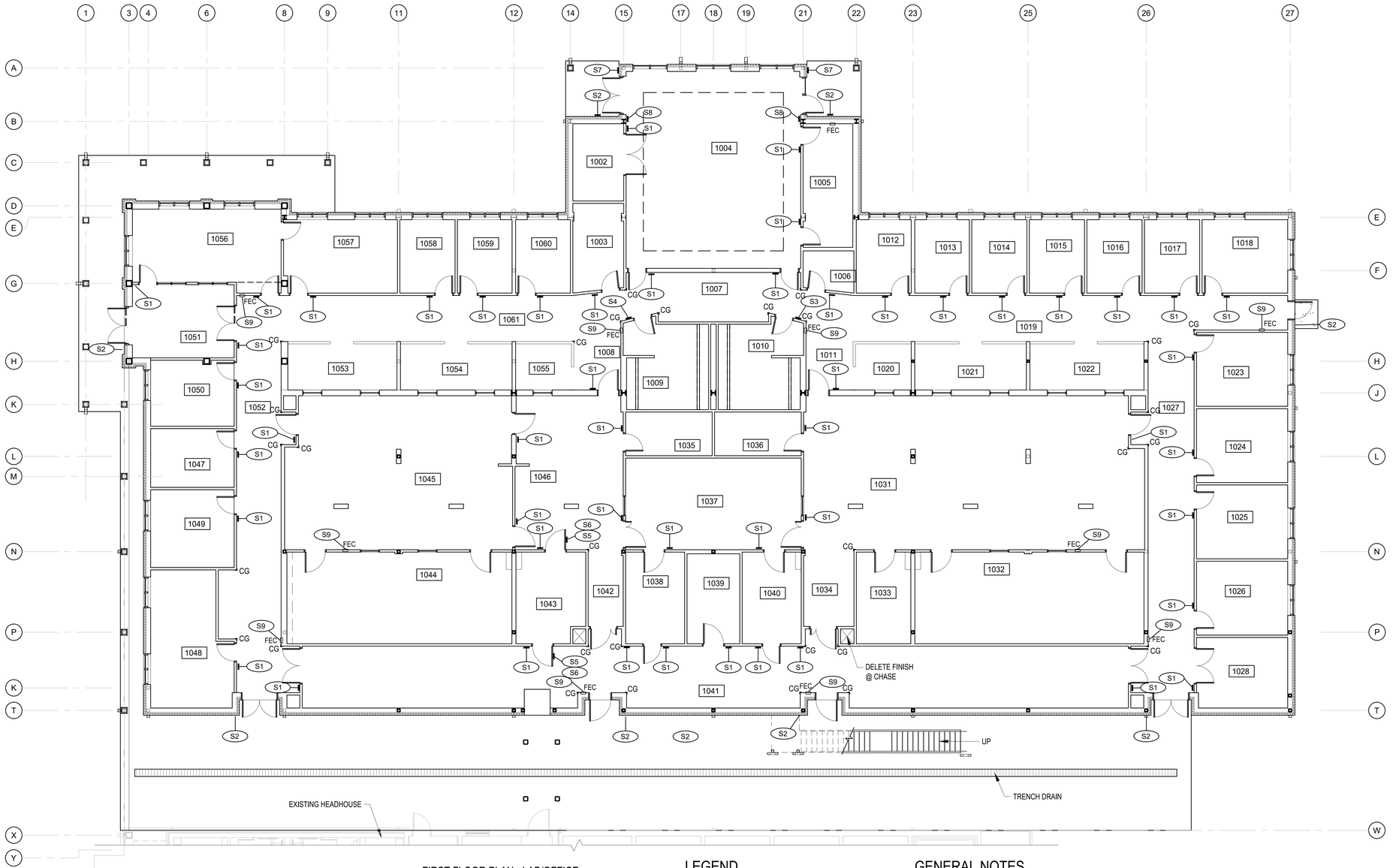

ROOM LEGEND

ROOM NO	ROOM NAME
1002	STORAGE
1003	STORAGE
1004	MEETING ROOM
1005	PREP
1006	JANITORIAL
1008	CORRIDPOR
1009	WOMEN
1010	MEN
1011	CORRIDOR
1012	OFFICE
1013	OFFICE
1014	OFFICE
1015	OFFICE
1016	OFFICE
1017	OFFICE
1018	SMALL CONFERENCE
1019	CORRIDOR
1020	TECH OFFICE
1021	TECH OFFICE
1022	TECH OFFICE
1023	CAT 3 OFFICE
1024	CAT 3 OFFICE
1025	TECHNICIAN OFFICE
1026	TECHNICIAN OFFICE
1027	CORRIDOR
1028	STORAGE
1031	PLANT PHYSIOLOGY / SOILS
1032	SUPPORT
1033	SUPPORT
1034	HALL
1035	SCOPE
1036	SCOPE
1037	SHARED EQUIPMENT ROOM
1038	SUPPORT
1039	STORAGE
1040	SUPPORT
1041	SERVICE / UTILITY CORRIDOR
1042	HALL
1043	BSL-2 LABORATORY
1044	SUPPORT
1045	PATHOLOGY / MOLECULAR GENETICS (CLEAN)
1046	PATHOLOGY / MOLECULAR GENETICS (DIRTY)
1047	FILES
1048	BREAK ROOM
1049	POST-DOC / TECHICAL OFFICE
1050	MAIL / WORK ROOM
1051	ENTRY LOBBY
1052	CORRIDOR
1053	TECH OFFICE
1054	TECH OFFICE
1055	TECH OFFICE
1056	PROGRAM ASSISTANT
1057	RESEARCH LEADER
1058	OFFICE
1059	OFFICE
1060	OFFICE
1061	CORRIDOR

1 FIRST FLOOR PLAN - LAB/OFFICE SIGNAGE / CORNER GUARDS

A-103.3 SCALE: 1/8"=1'-0"

PLAN NORTH TRUE NORTH

LEGEND

CG CORNER GUARD, SEE DETAIL 2/A-101.3

S2 SIGNAGE, SEE SIGNAGE TYPES 4/A-103.3

GENERAL NOTES

1. CASEWORK NOT SHOWN FOR CLARITY. DRAWING IS FOR SIGNAGE AND CORNER GUARDS.

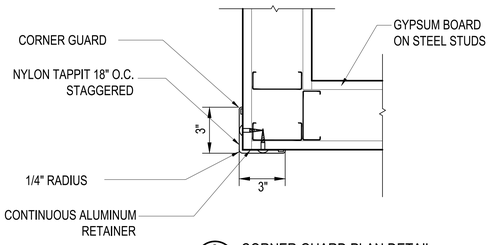

2 CORNER GUARD PLAN DETAIL

A-103.3 SCALE: 3" = 1'-0"

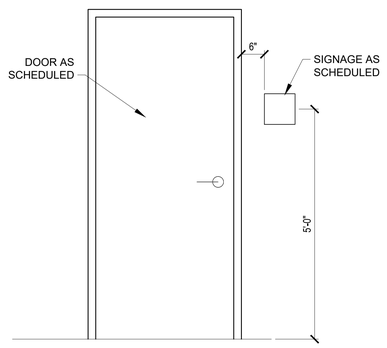

3 SIGNAGE MOUNTING DETAIL

A-103.3 SCALE: N.T.S.

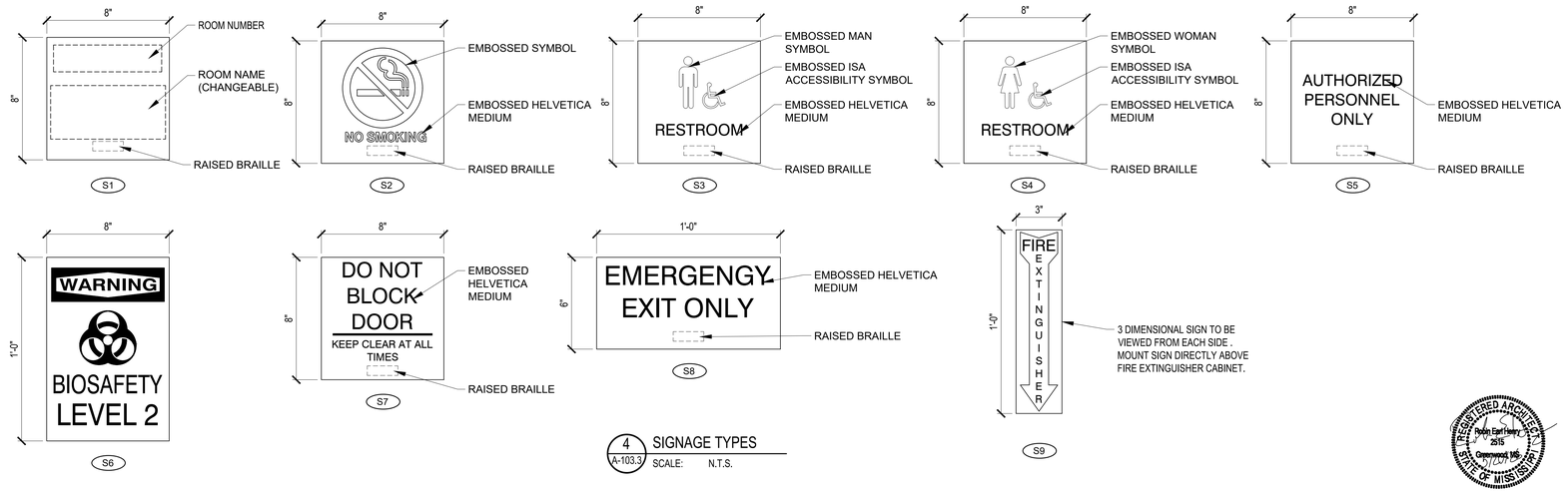

4 SIGNAGE TYPES

A-103.3 SCALE: N.T.S.

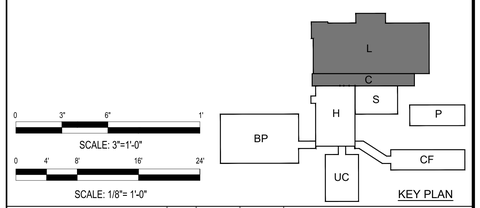

KEY PLAN

NO.	DATE	BY	DESCRIPTION
			REVISIONS

Johnson Mirmiran Adams

A-E FIRM	USDA
PROJECT MANAGER: REH	EPM: WN
DESIGNER: JLF	PPM: XXX
CHECKED BY: DRL	SAFETY & HEALTH: CM
JOB #: 5825	REAL PROPERTY: JS

USDA Agricultural Research Service

USDA AGRICULTURAL RESEARCH SERVICE
SUGARCANE RESEARCH LABORATORY
HOUMA, LOUISIANA

FIRST FLOOR PLAN
SIGNAGE / CORNER GUARDS

PROJECT NO.	AGRICULTURAL RESEARCH SERVICE FACILITIES ENGINEERING BRANCH 5106 SUNNYSIDE AVENUE BELTSVILLE, MD 20705-5100	SHEET
XXX		A-101.3
DATE: 05/20/2026		41 OF 176

REGISTERED ARCHITECT Peter Earl Hardy 2515 Greenwood, MS STATE OF MISSISSIPPI

C:\Users\MICHAEL~1\AppData\Local\Temp\AcPublish_28588\A101.3.dwg
May 20, 2026 - 8:57pm

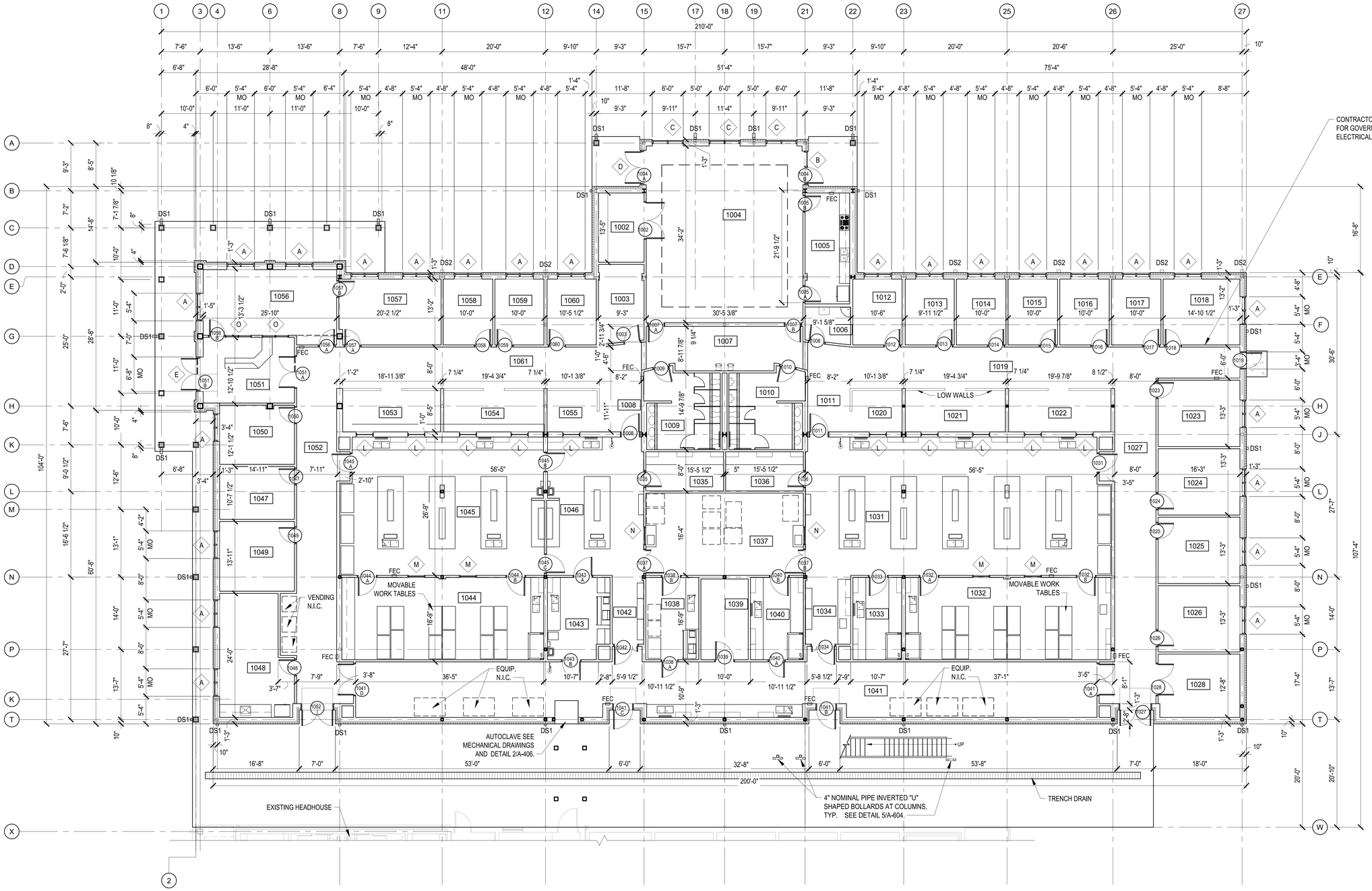

ROOM LEGEND

ROOM NO	ROOM NAME
1002	STORAGE
1003	STORAGE
1004	MEETING ROOM
1005	PREP
1006	JANITORIAL
1007	CORRIDOR
1008	CORRIDOR
1009	WOMEN
1010	MEN
1011	CORRIDOR
1012	OFFICE
1013	OFFICE
1014	OFFICE
1015	OFFICE
1016	OFFICE
1017	OFFICE
1018	SMALL CONFERENCE
1019	CORRIDOR
1020	TECH OFFICE
1021	TECH OFFICE
1022	TECH OFFICE
1023	CAT 3 OFFICE
1024	CAT 3 OFFICE
1025	TECHNICIAN OFFICE
1026	TECHNICIAN OFFICE
1027	CORRIDOR
1028	STORAGE
1031	PLANT PHYSIOLOGY / SOILS
1032	SUPPORT
1033	SUPPORT
1034	HALL
1035	SCOPE
1036	SCOPE
1037	SHARED EQUIPMENT ROOM
1038	SUPPORT
1039	STORAGE
1040	SUPPORT
1041	SERVICE / UTILITY CORRIDOR
1042	HALL
1043	BSL-2 LABORATORY
1044	SUPPORT
1045	PATHOLOGY / MOLECULAR GENETICS (CLEAN)
1046	PATHOLOGY / MOLECULAR GENETICS (DIRTY)
1047	FILES
1048	BREAK ROOM
1049	POST-DOC / TECHICAL OFFICE
1050	MAIL / WORK ROOM
1051	ENTRY LOBBY
1052	CORRIDOR
1053	TECH OFFICE
1054	TECH OFFICE
1055	TECH OFFICE
1056	PROGRAM ASSISTANT
1057	RESEARCH LEADER
1058	OFFICE
1059	OFFICE
1060	OFFICE
1061	CORRIDOR

1 A-101 FIRST FLOOR DIMENSION PLAN
SCALE: 1/8"=1'-0"

PLAN NORTH TRUE NORTH

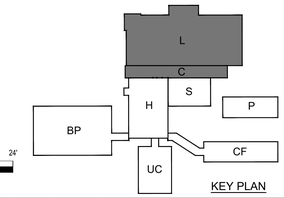

KEY PLAN

0 4' 8' 16' 24'
SCALE: 1/8"= 1'-0"

GENERAL NOTES

1. ALL PLAN DIMENSIONS ARE FROM FACE OF MASONRY OR GYP. BD. OR FROM COLUMN GRID LINE.
2. ALL DIMENSIONS ARE NOMINAL. RE: A-401 FOR ACTUAL WALL DIMENSIONS.
3. SEE A-101.1 FOR FIRE RATED PARTITIONS.
4. SEE A-103 FOR HEIGHT OF PARTITIONS.

LEGEND

L — WINDOW TYPE SEE A-802

1048 — DOOR NUMBER SEE A-801

DS1 — 6" x 4" PRE-FINISHED ALUMINUM DOWNSPOUT

DS2 — 8" x 6" PRE-FINISHED ALUMINUM DOWNSPOUT

REGISTERED ARCHITECT Robin Earl Henry 2515 Greenwood, MS STATE OF MISSISSIPPI

jm Johnson McAdams FIRM P.O. BOX 515, GREENWOOD, MISSISSIPPI 38935-0515

NO.	DATE	BY	DESCRIPTION

REVISIONS

A-E FIRM	USDA
PROJECT MANAGER REH	EPM WN
DESIGNER JLF	PPM XXX
CHECKED BY DRL	SAFETY & HEALTH CM
JOB # 5825	REAL PROPERTY JS

USDA Agricultural Research Service

USDA AGRICULTURAL RESEARCH SERVICE
SUGARCANE RESEARCH LABORATORY
HOUMA, LOUISIANA

FIRST FLOOR DIMENSION PLAN

PROJECT NO. XXX
DATE 05/20/2026

AGRICULTURAL RESEARCH SERVICE
FACILITIES ENGINEERING BRANCH
5106 SUNNYSIDE AVENUE
BELTSVILLE, MD 20705-5100

SHEET A-101
38 OF 176

C:\Users\MCHAE~1\AppData\Local\Temp\AcPublish_28588\A101.dwg
May 20, 2026 - 8:31am

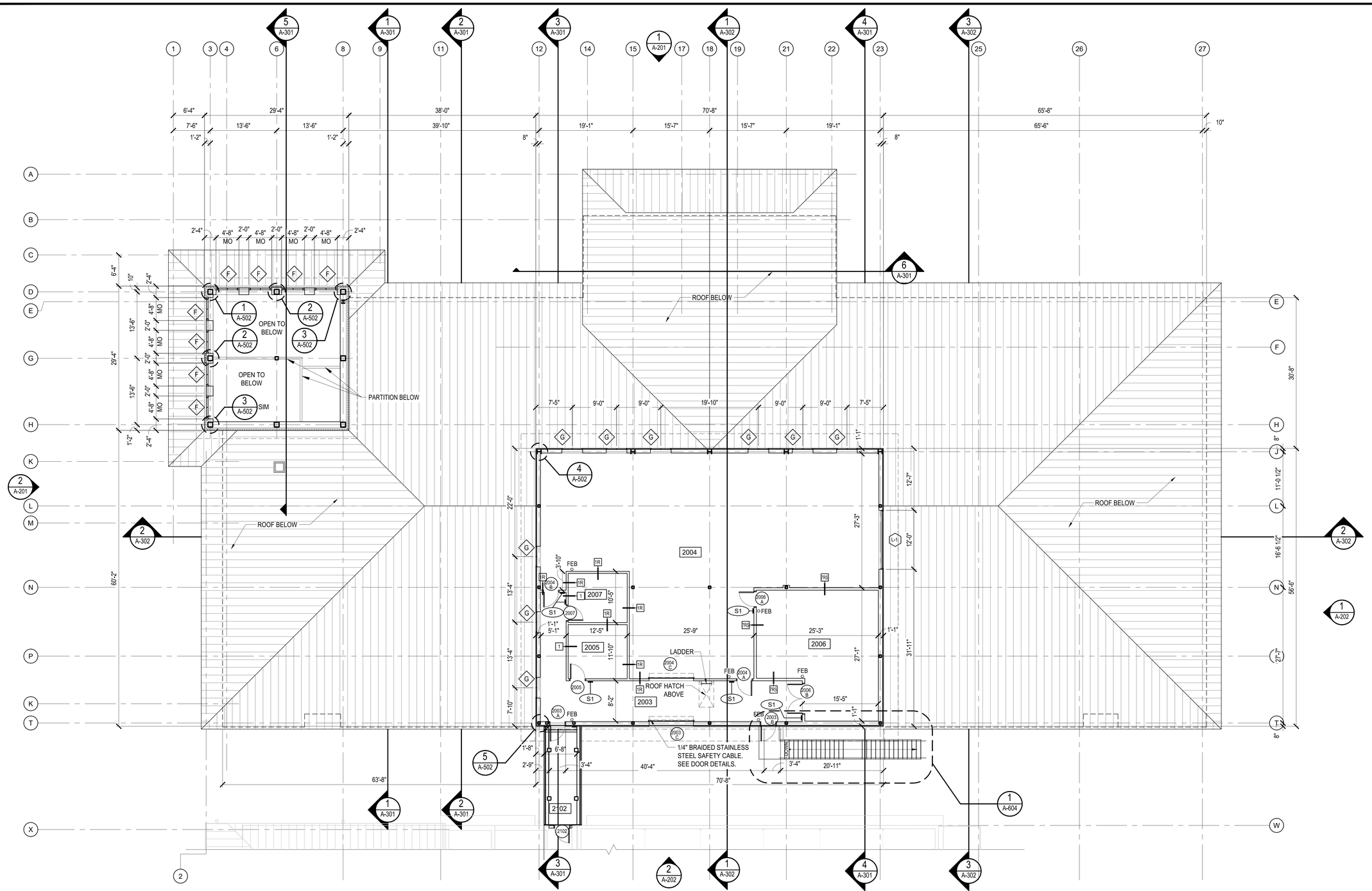

1 A-102 SECOND FLOOR PLAN - LAB/OFFICE
SCALE: 1/8"=1'-0"

PLAN NORTH TRUE NORTH

ROOM LEGEND

ROOM NO	ROOM NAME
2003	SERVICE / UTILITY CORRIDOR
2004	MECHANICAL PENTHOUSE
2005	COMMUNICATIONS
2006	ELECTRICAL ROOM
2007	STORAGE
2102	CORRIDOR

GENERAL NOTES

1. ALL PLAN DIMENSIONS ARE FROM FACE OF GYP. BD.OR FROM CENTER OF OPENING OR FROM COLUMN GRID LINE.
2. ALL DIMENSIONS ARE NOMINAL. RE: A-401 FOR ACTUAL WALL DIMENSIONS.
3. SEE A-003 FOR FIRE RATED PARTITIONS.
4. SEE A-102 FOR HEIGHT OF PARTITIONS.

LEGEND

- L — WINDOW TYPE SEE A-802
- N — WALL TYPE SEE 2/A-401
- 1048 — DOOR NUMBER SEE A-801
- DS1 — 6" x 4" PRE-FINISHED ALUMINUM DOWNSPOUT
- DS2 — 8" x 6" PRE-FINISHED ALUMINUM DOWNSPOUT
- LN — LOUVER TYPE SEE A-802
- FEB — FIRE EXTINGUISHER BRACKET
- S2 — SIGNAGE, SEE SIGNAGE TYPES 4/A-101.3

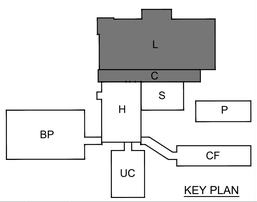

KEY PLAN

0 4' 8' 16' 24'
SCALE: 1/8"= 1'-0"

NO.	DATE	BY	DESCRIPTION

REVISIONS

Johnson McAdams
ARCHITECTS/ENGINEERS PLANNING SURVEYING MANAGEMENT
P.O. BOX 515, GREENWOOD, MISSISSIPPI (662) 455-6943

A-E FIRM	USDA
PROJECT MANAGER REH	EPM WN
DESIGNER JLF	PPM XXX
CHECKED BY DRL	SAFETY & HEALTH CM
JOB # 5825	REAL PROPERTY JS

USDA Agricultural Research Service

USDA AGRICULTURAL RESEARCH SERVICE
SUGARCANE RESEARCH LABORATORY
HOUMA, LOUISIANA

SECOND FLOOR PLAN

PROJECT NO. XXX
DATE 05/20/2026

AGRICULTURAL RESEARCH SERVICE
FACILITIES ENGINEERING BRANCH
5106 SUNNYSIDE AVENUE
BELTSVILLE, MD 20705-5100

SHEET A-102
42 OF 176

REGISTERED ARCHITECT
Robin Earl Henry
2515
Greenwood, MS
STATE OF MISSISSIPPI

C:\Users\MCHAE~1\AppData\Local\Temp\AcPublish_28588\A102.dwg
May 20, 2026 - 8:31am

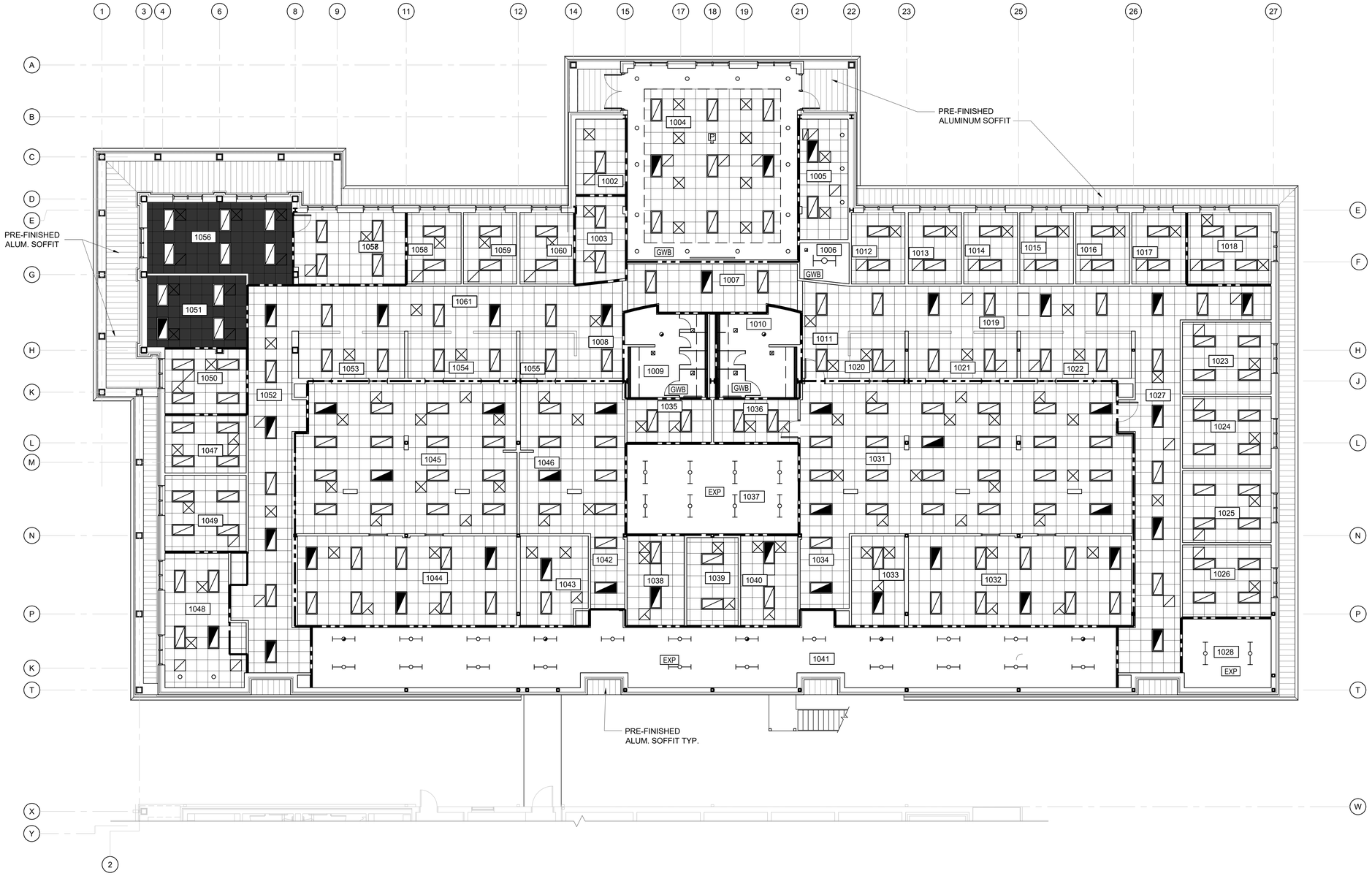

ROOM LEGEND

ROOM NO	ROOM NAME
1002	STORAGE
1003	STORAGE
1004	CONFERENCE ROOM
1005	PREP
1006	JANITORIAL
1008	CORRIDPOR
1009	WOMEN
1010	MEN
1011	CORRIDOR
1012	OFFICE
1013	OFFICE
1014	OFFICE
1015	OFFICE
1016	OFFICE
1017	OFFICE
1018	SMALL CONFERENCE
1019	CORRIDOR
1020	TECH OFFICE
1021	TECH OFFICE
1022	TECH OFFICE
1023	CAT 3 OFFICE
1024	CAT 3 OFFICE
1025	TECHNICIAN OFFICE
1026	TECHNICIAN OFFICE
1027	CORRIDOR
1028	STORAGE
1031	PLANT PHYSIOLOGY / SOILS
1032	SUPPORT
1033	SUPPORT
1034	HALL
1035	SCOPE
1036	SCOPE
1037	SHARED EQUIPMENT ROOM
1038	SUPPORT
1039	STORAGE
1040	SUPPORT
1041	SERVICE / UTILITY CORRIDOR
1042	HALL
1043	SUPPORT
1044	SUPPORT
1045	PATHOLOGY / MOLECULAR GENETICS (CLEAN)
1046	PATHOLOGY / MOLECULAR GENETICS (DIRTY)
1047	FILES
1048	BREAK ROOM
1049	POST-DOC / TECHICAL OFFICE
1050	MAIL / WORK ROOM
1051	ENTRY LOBBY
1052	CORRIDOR
1053	TECH OFFICE
1054	TECH OFFICE
1055	TECH OFFICE
1056	PROGRAM ASSISTANT
1057	RESEARCH LEADER
1058	OFFICE
1059	OFFICE
1060	OFFICE
1061	CORRIDOR

1 A-103 FIRST FLOOR REFLECTED CEILING PLAN - LAB/OFFICE

SCALE: 1/8"=1'-0"

PLAN NORTH

TRUE NORTH

LEGEND

- 2' X 2' ACOUSTICAL TILE CEILING
- 2' X 2' ACOUSTICAL TILE CEILING AT SECOND FLOOR LEVEL AS SCHEDULED.
- PRE-FINISHED ALUMINUM SOFFIT PANEL
- GWB — GYPSUM WALL BOARD CEILING
- EXP — EXPOSED STRUCTURE
- SURFACE MOUNTED OR SUSPENDED INDUSTRIAL LED STRIP FIXTURE.
- SURFACE MOUNTED OR SUSPENDED INDUSTRIAL LED EMERGENCY STRIP FIXTURE.
- RECESSED MOUNTED LED TROFFER LIGHT FIXTURE
- RECESSED MOUNTED LED TROFFER EMERGENCY FIXTURE
- RECESSED MOUNTED LED STRIP LIGHT FIXTURE
- RECESSED LED LUMINAIRE
- RECESSED LED LUMINAIRE, EMERGENCY FIXTURE
- SUPPLY AIR DIFFUSER
- RETURN AIR GRILLES
- EXHAUST GRILLES
- POWERED PROJECTION SCREEN. SEE ELECTRICAL DRAWINGS FOR ADDITIONAL WORK.
- CEILING MOUNTED PROJECTOR. SEE ELECTRICAL DRAWINGS FOR ADDITIONAL WORK.
- INTERIOR PARTITIONS EXTENDING TO UNDERSIDE OF FLOOR DECK ALL OTHER INTERIOR PARTITIONS 6" ABOVE CEILING

GENERAL NOTES:

1. UNLESS SPECIFICALLY NOTED OTHERWISE, ALL DOWNLIGHTS, SPEAKERS, SPRINKLER HEADS, ETC. SHALL BE CENTERED IN CEILING PANELS.
2. EXPOSED CUT EDGES OF TEGULAR CEILING PANELS SHALL BE ROUTED AND PAINTED TO MATCH PANEL.
3. CLIP IN PLACE CEILING PANELS WITHIN 6' IMMEDIATELY IN FRONT OF EACH EXTERIOR DOOR.
4. REFER TO A-401 FOR SLIP JOINT DETAILS AT WALLS TO FLOOR OR ROOF DECK.
5. SEE SHEET A101.2 FOR FIRST FLOOR PLAN FOR SECTION AND ELEVATION DETAIL REFERENCES.

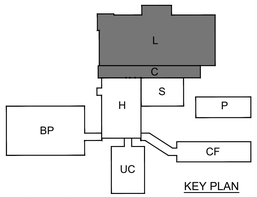

0 4' 8' 16' 24'

SCALE: 1/8"= 1'-0"

KEY PLAN

NO.	DATE	BY	DESCRIPTION

REVISIONS

The Johnson Mˢ Adams PSM P.A. ARCHITECTS/ENGINEERS PLANNERS SURVEYING ENVIRONMENT P.O. BOX 513, GREENWOOD, MISSISSIPPI (662) 455-4343

REGISTERED ARCHITECT Robin Earl Henry 2915 Greenwood, MS STATE OF MISSISSIPPI

USDA Agricultural Research Service

USDA AGRICULTURAL RESEARCH SERVICE
SUGARCANE RESEARCH LABORATORY
HOUMA, LOUISIANA

FIRST FLOOR REFLECTED CEILING PLAN

A-E FIRM	USDA
PROJECT MANAGER	EPM
REH	WN
DESIGNER	PPM
JLF	XXX
CHECKED BY	SAFETY & HEALTH
DRL	CM
JOB #	REAL PROPERTY
5825	JS

PROJECT NO.	AGRICULTURAL RESEARCH SERVICE FACILITIES ENGINEERING BRANCH 5106 SUNNYSIDE AVENUE BELTSVILLE, MD 20705-5100	SHEET
XXX		A-103
DATE		43 OF 176
05/20/2026		

C:\Users\JMORALES\Applications\Local\Temp\AcPublish_28588\A103.dwg
May 20, 2026 - 8:57am

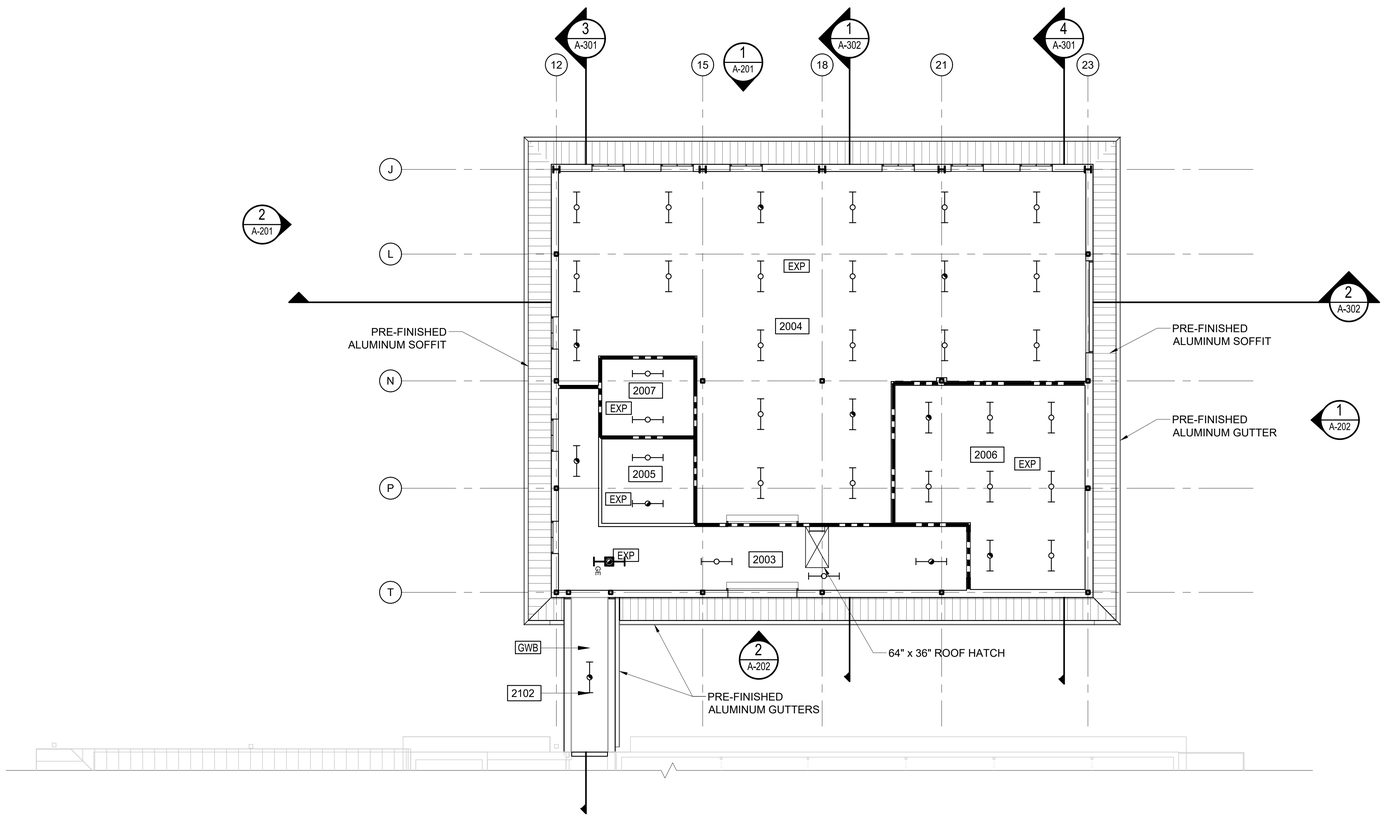

LEGEND

EXP	EXPOSED STRUCTURE
GWB	METAL PANEL - FACTORY INSULATED
	SURFACE MOUNTED OR SUSPENDED INDUSTRIAL FLUORESCENT STRIP FIXTURE.
	SURFACE MOUNTED OR SUSPENDED INDUSTRIAL FLUORESCENT EMERGENCY STRIP FIXTURE.
	INTERIOR PARTITIONS EXTENDING TO UNDERSIDE OF FLOOR OR ROOF DECK ALL OTHER INTERIOR PARTITIONS 6" ABOVE CEILING

GENERAL NOTES:

1. UNLESS SPECIFICALLY NOTED OTHERWISE, ALL DOWNLIGHTS, SPEAKERS, SPRINKLER HEADS, ETC. SHALL BE CENTERED IN CEILING TILE.
2. EXPOSED CUT EDGES OF TEGULAR CEILING TILE SHALL BE ROUTED AND PAINTED TO MATCH TILE.
3. CLIP IN PLACE CEILING PANELS WITHIN 6' IMMEDIATELY IN FRONT OF EACH EXTERIOR DOOR.
4. REFER TO 1/A-401 FOR SLIP JOINT DETAILS AT WALLS TO FLOOR DECK.

ROOM LEGEND

ROOM NO	ROOM NAME
2003	SERVICE / UTILITY CORRIDOR
2004	MECHANICAL PENTHOUSE
2005	COMMUNICATIONS
2006	ELECTRICAL ROOM
2007	STORAGE
2102	CORRIDOR

1 A-104 SECOND FLOOR REFLECTED CEILING PLAN - LAB / OFFICE

SCALE: 1/8"=1'-0"

PLAN NORTH

TRUE NORTH

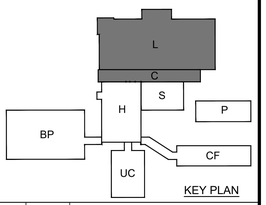

0 4' 8' 16' 24'

SCALE: 1/8"= 1'-0"

KEY PLAN

Johnson Mirmiran & Thompson
ARCHITECTS/ENGINEERS PLANNERS SURVEYING ENVIRONMENT
P.O. BOX 313 GREENWOOD, MISSISSIPPI (662) 455-6441

NO.	DATE	BY	DESCRIPTION

REVISIONS

REGISTERED ARCHITECT
Peyton Earl Henry, Jr.
2515
Greenwood, MS
STATE OF MISSISSIPPI

A-E FIRM	USDA
PROJECT MANAGER	EPM
REH	WN
DESIGNER	PPM
JLF	XXX
CHECKED BY	SAFETY & HEALTH
DRL	CM
JOB #	REAL PROPERTY
5825	JS

USDA Agricultural Research Service

USDA AGRICULTURAL RESEARCH SERVICE
SUGARCANE RESEARCH LABORATORY
HOUMA, LOUISIANA

SECOND FLOOR REFLECTED CEILING PLAN

PROJECT NO.	XXX
DATE	05/20/2026

AGRICULTURAL RESEARCH SERVICE
FACILITIES ENGINEERING BRANCH
5106 SUNNYSIDE AVENUE
BELTSVILLE, MD 20705-5100

SHEET
A-104
44 OF 176

C:\Users\MICHAE~1\AppData\Local\Temp\AcPublish_28588\A104.dwg
May 20, 2026 - 8:39am

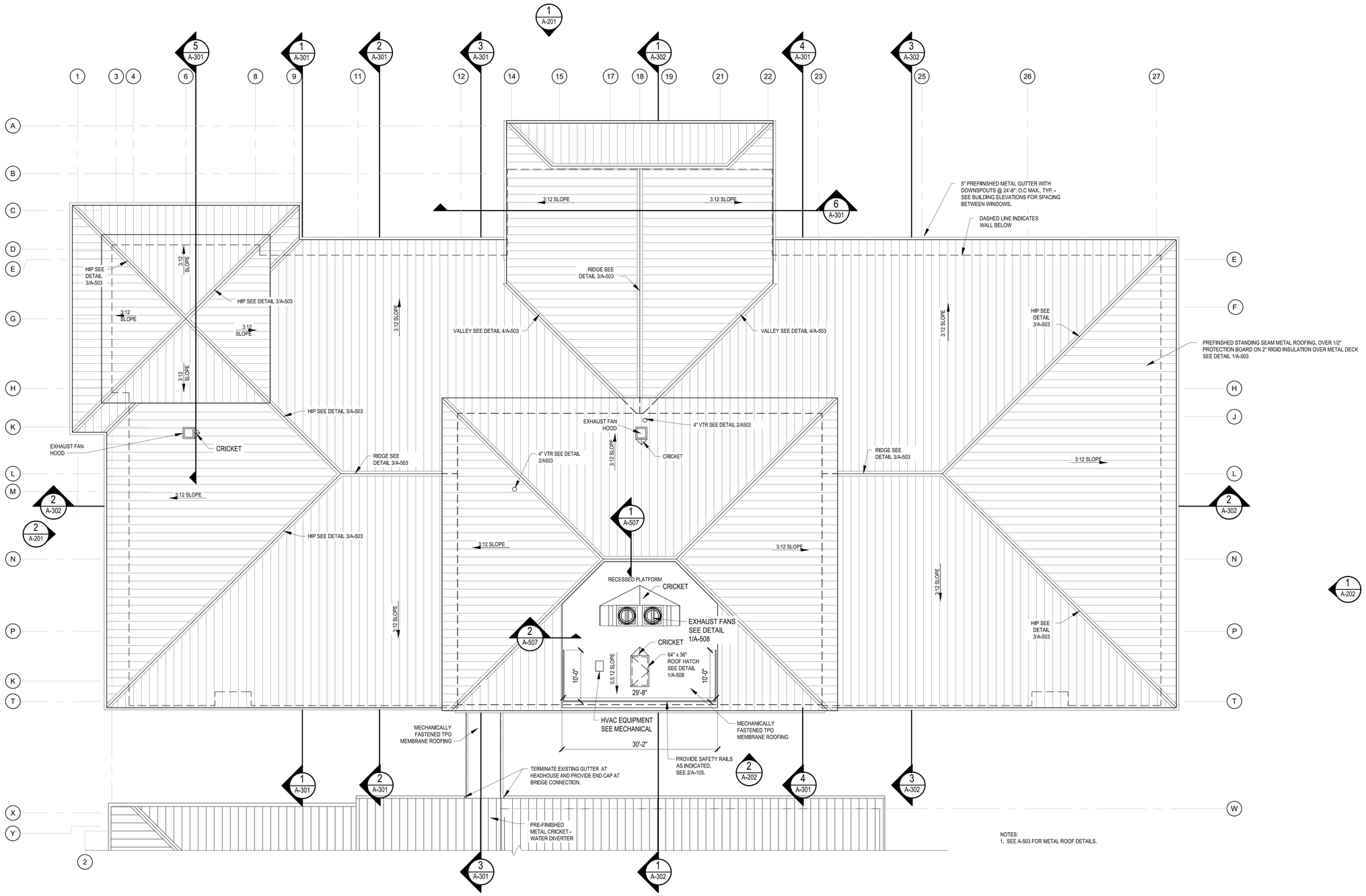

NOTES:
1. SEE A-503 FOR METAL ROOF DETAILS.

1 A-105 ROOF PLAN
SCALE: 1/8"=1'-0"

PLAN NORTH TRUE NORTH

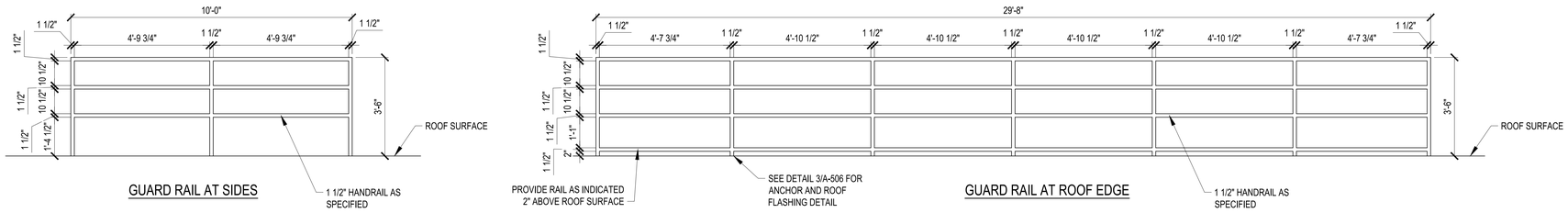

GUARD RAIL AT SIDES

GUARD RAIL AT ROOF EDGE

2 A-105 GAURD RAIL ELEVATIONS
SCALE: 1/2"=1'-0"

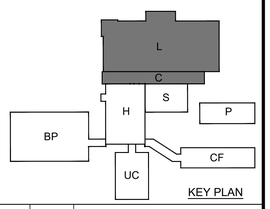

KEY PLAN

0 8' 16' 32' 48'
SCALE: 1/16" = 1'-0"

NO.	DATE	BY	DESCRIPTION

REVISIONS

Johnson McAdams
ARCHITECTS ENGINEERS PLANNERS SURVEYING MANAGEMENT
P.O. BOX 515 GREENWOOD, MISSISSIPPI (662) 455-6400

A-E FIRM	USDA
PROJECT MANAGER REH	EPM WN
DESIGNER JLF	PPM XXX
CHECKED BY DRL	SAFETY & HEALTH CM
JOB # 5825	REAL PROPERTY JS

USDA Agricultural Research Service

USDA AGRICULTURAL RESEARCH SERVICE
SUGARCANE RESEARCH LABORATORY
HOUMA, LOUISIANA

ROOF PLAN

PROJECT NO. XXX
DATE 05/20/2026

AGRICULTURAL RESEARCH SERVICE
FACILITIES ENGINEERING BRANCH
5106 SUNNYSIDE AVENUE
BELTSVILLE, MD 20705-5100

SHEET A-105
45 OF 176

REGISTERED ARCHITECT
Robin Earl Henry
2515
Greenwood, MS
STATE OF MISSISSIPPI

C:\Users\MCKAC-1\AppData\Local\Temp\AcPublish_28588\A105.dwg
May 20, 2026 - 8:31am

NOTES:
SEE STRUCTURAL DRAWINGS
FOR REINFORCED CMU CONTROL JOINTS

DOWNSPOUTS AND SIZES:
DS1 - 6" X 4"
DS2 - 8" X 6"

EXTERIOR FINISH MATERIALS

A	CMU-1	TRENDSTONE GROUND FACE CMU, "CORAL" COLOR, WITHOUT ACRYLIC SEALER
B	CMU-2	TRENDSTONE GROUND FACE CMU, "BURNT SANDSTONE" COLOR WITHOUT ACRYLIC SEALER, NOMINAL 24" x 16" x 4" MONUMENTAL SIZE UNITS
C	MWP-1	METAL WALL PANEL [CENTRIA 2" THICK FORMAWALL DIMENSION SERIES INSULATED METAL WALL PANELS] [FIRESTONE UNA-CLAD SERIES 10 1" THICK FLUSH METAL WALL PANELS], FIRESTONE UNA-CLAD COLOR "SIERRA TAN"
D	M-1	PRE-FINISHED METAL FASCIAS, SOFFIT PANELS, GUTTERS AND DOWNSPOUTS, WHITE COLOR, TO BE SELECTED TO MATCH FRP COLUMN COVERS
E	CC-1	FIBERGLASS REINFORCED POLYMER COLUMN COVERS, WHITE COLOR
F	SSMR	PRE-FINISHED STANDING SEAM METAL ROOFING, FIRESTONE UNA-CLAD COLOR HEMLOCK GREEN" COLOR
G	W-1	PRE-FINISHED ALUMINUM WINDOW FRAMES, WHITE COLOR
H	GL-1	CLEAR LOW-E GLASS

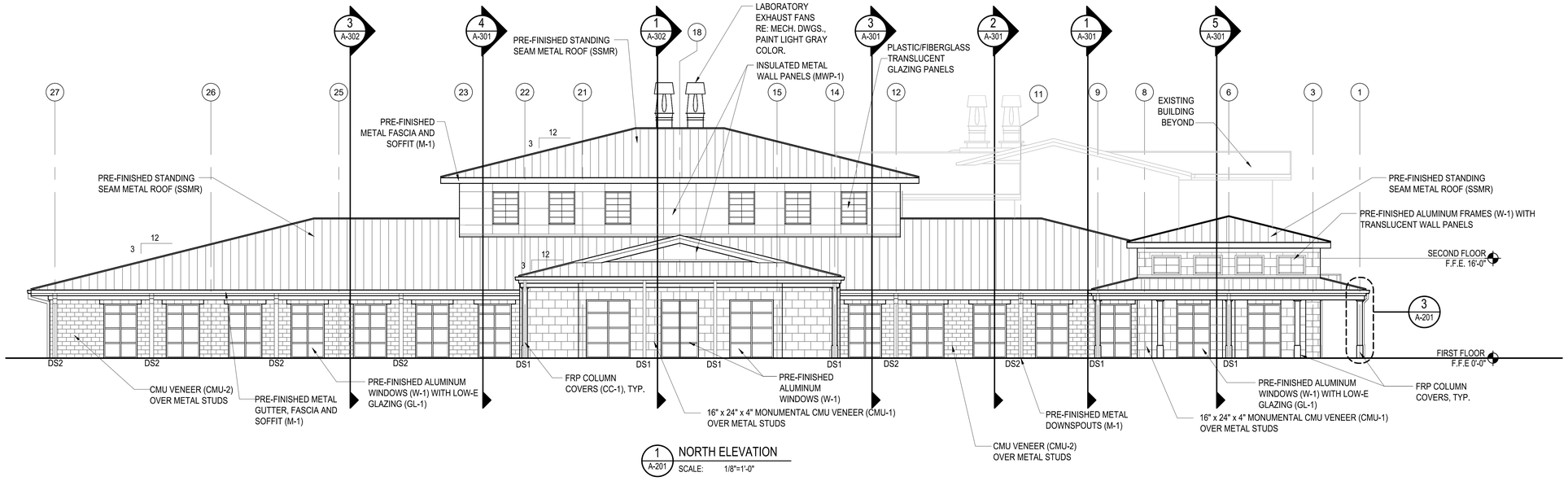

1 A-201 NORTH ELEVATION
SCALE: 1/8"=1'-0"

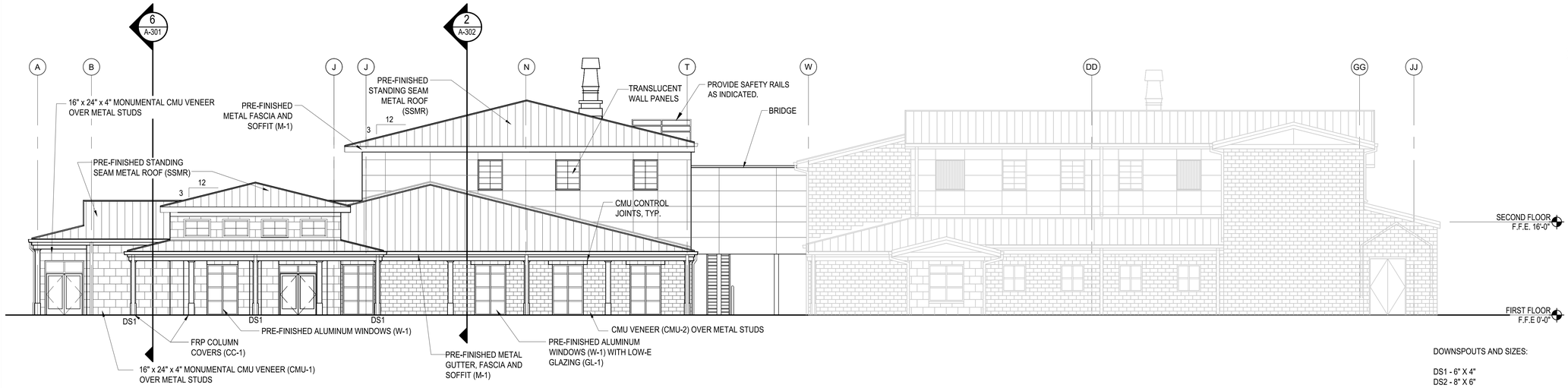

2 A-201 WEST ELEVATION
SCALE: 1/8"=1'-0"

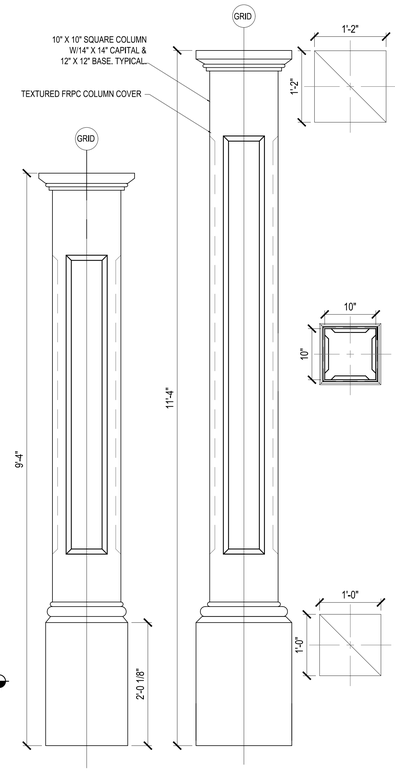

3 A-201 FRP COLUMN DETAILS
SCALE: 1"=1'-0"

DOWNSPOUTS AND SIZES:

DS1 - 6" X 4"
DS2 - 8" X 6"

0 4' 8' 16' 24'
SCALE: 1/8"= 1'-0"

0 1' 2' 3'
SCALE: 1"=1'-0"

Johnson, Mirmiran & Thompson, Inc. — Johnson, Mirmiran & Thompson, P.C. — Johnson McAdams, PLLC
ENGINEERS/ARCHITECTS/PLANNERS/SURVEYORS
P.O. BOX 313, GREENWOOD, MISSISSIPPI - (662) 455-6643

NO.	DATE	BY	DESCRIPTION

REVISIONS

A-E FIRM	USDA
PROJECT MANAGER	REH
EPM	WN
DESIGNER	JLF
PPM	XXX
CHECKED BY	DRL
SAFETY & HEALTH	CM
JOB #	5825
REAL PROPERTY	JS

USDA Agricultural Research Service

USDA AGRICULTURAL RESEARCH SERVICE
SUGARCANE RESEARCH LABORATORY
HOUMA, LOUISIANA

EXTERIOR ELEVATIONS

PROJECT NO.	XXX	AGRICULTURAL RESEARCH SERVICE FACILITIES ENGINEERING BRANCH 5106 SUNNYSIDE AVENUE BELTSVILLE, MD 20705-5100
DATE	05/20/2026	SHEET A-201
		46 OF 176

REGISTERED ARCHITECT — Robin Earl Henry, Jr. — 2015 — Commonwealth of Mississippi — STATE OF MISSISSIPPI

C:\Users\MMOYA~1\Appdata\Local\Temp\AcPublish_20556\A201.dwg
May 20, 2026 - 8:37am

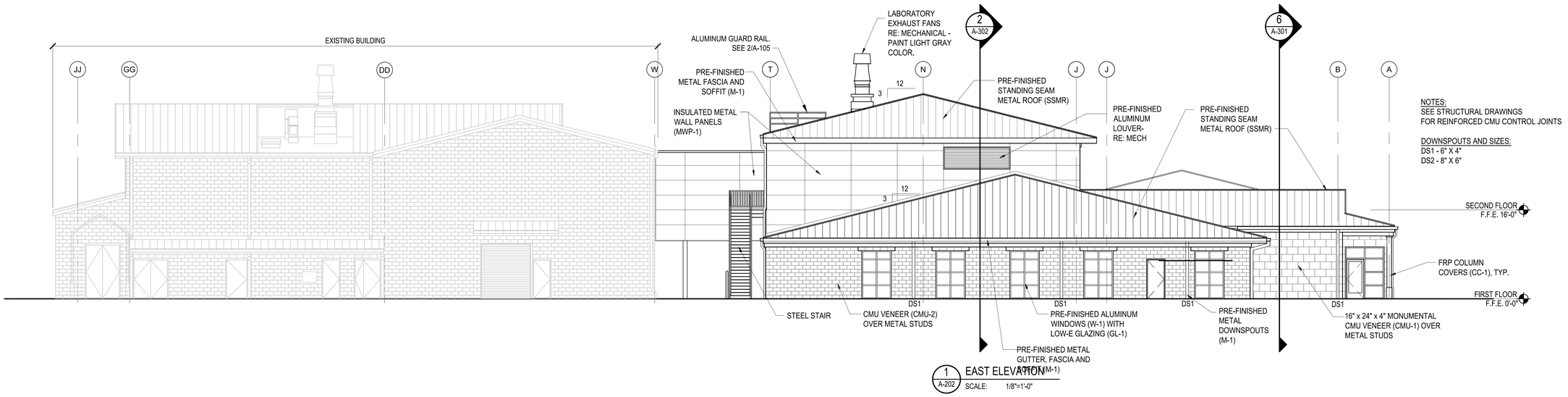

1 A-202 EAST ELEVATION
SCALE: 1/8"=1'-0"

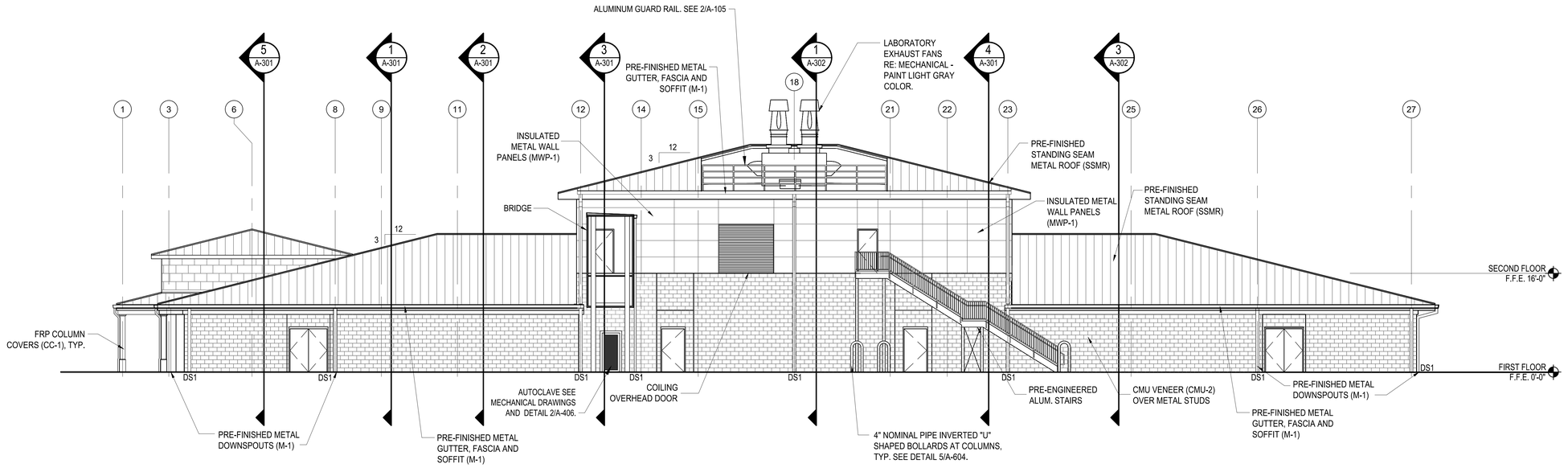

2 A-202 SOUTH ELEVATION
SCALE: 1/8"=1'-0"

0 4' 8' 16' 24'
SCALE: 1/8"= 1'-0"

NO.	DATE	BY	DESCRIPTION
			REVISIONS

Johnson, Mirmiran & Thompson, Inc. ARCHITECTS ENGINEERS PLANNERS SURVEYING ENVIRONMENT P.O. BOX 313 GREENWOOD, MISSISSIPPI (662) 455-6441

A-E FIRM	USDA
PROJECT MANAGER	EPM
REH	WN
DESIGNER	PPM
JLF	XXX
CHECKED BY	SAFETY & HEALTH
DRL	CM
JOB #	REAL PROPERTY
5825	JS

REGISTERED ARCHITECT Parker Earl Henry 21515 STATE OF MISSISSIPPI Greenwood, MS 01/20/26

USDA Agricultural Research Service

USDA AGRICULTURAL RESEARCH SERVICE
SUGARCANE RESEARCH LABORATORY
HOUMA, LOUISIANA

EXTERIOR ELEVATIONS

PROJECT NO. XXX	AGRICULTURAL RESEARCH SERVICE FACILITIES ENGINEERING BRANCH 5106 SUNNYSIDE AVENUE BELTSVILLE, MD 20705-5100	SHEET A-202
DATE 05/20/2026		47 OF 176

C:\Users\MICHAE~1\AppData\Local\Temp\AcPublish_28588\A202.dwg
May 20, 2026 - 8:37am

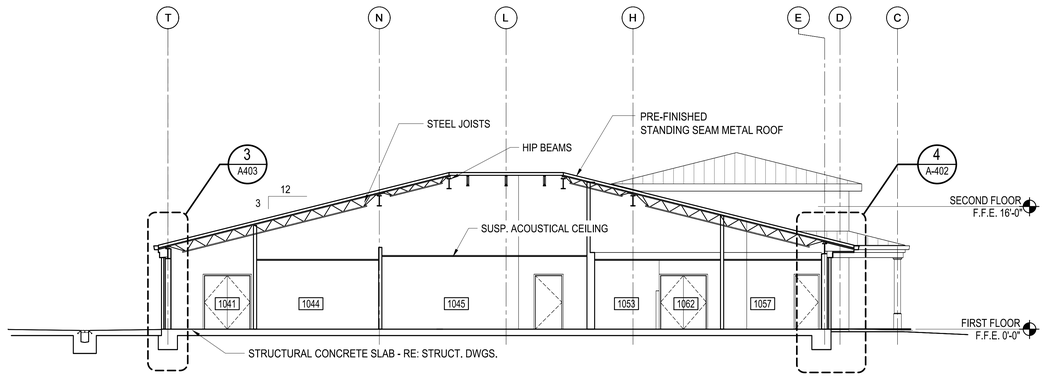

1 A-301 BUILDING SECTION
SCALE: 1/8"=1'-0"

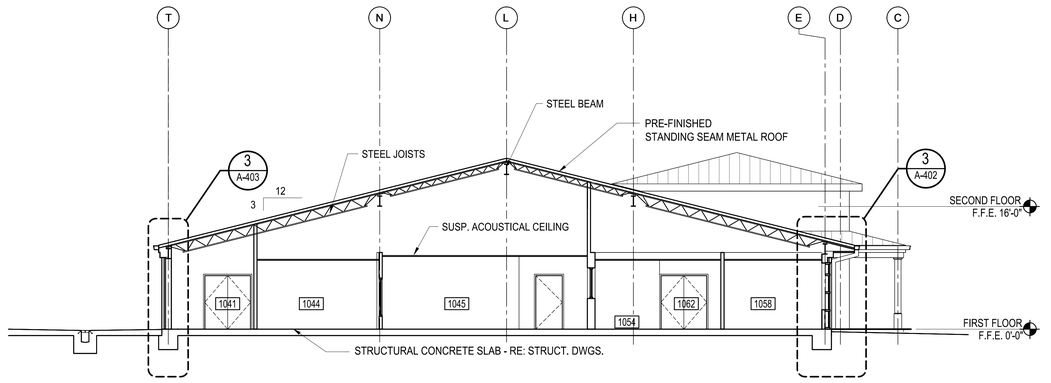

2 A-301 BUILDING SECTION
SCALE: 1/8"=1'-0"

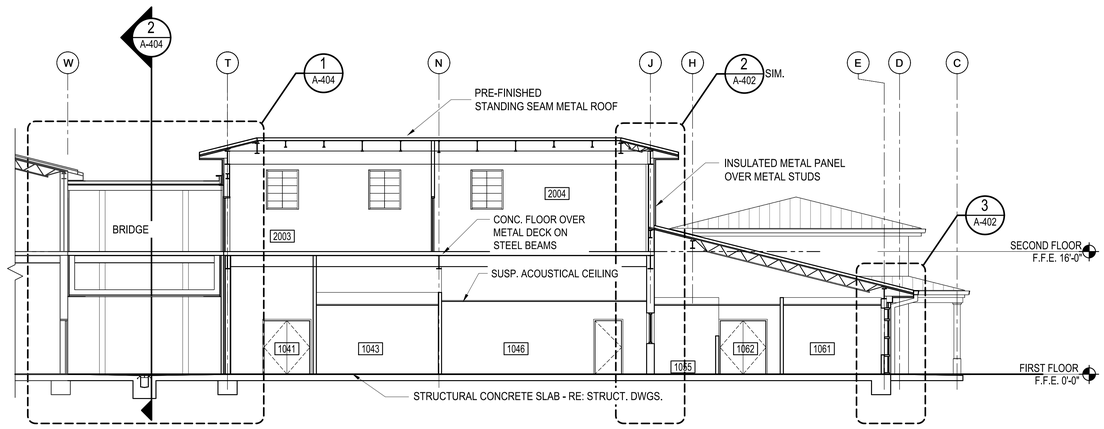

3 A-301 BUILDING SECTION
SCALE: 1/8"=1'-0"

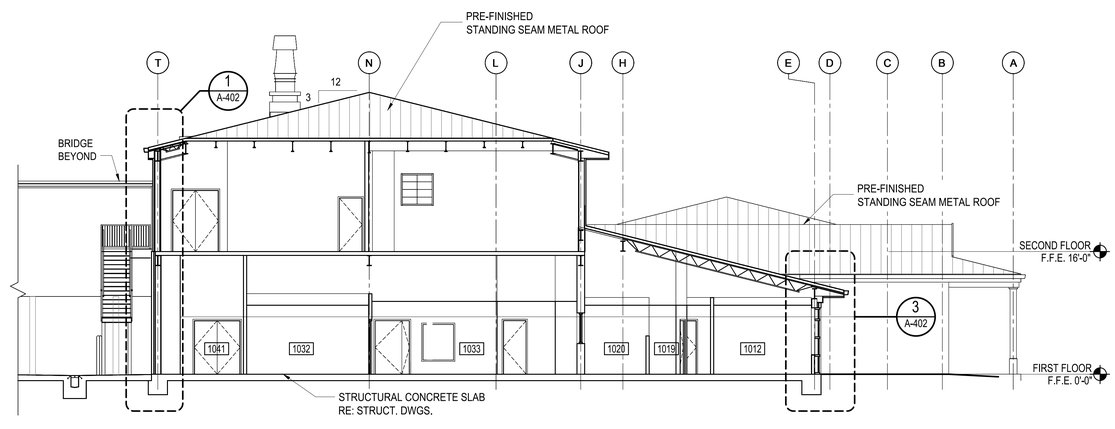

4 A-301 BUILDING SECTION
SCALE: 1/8"=1'-0"

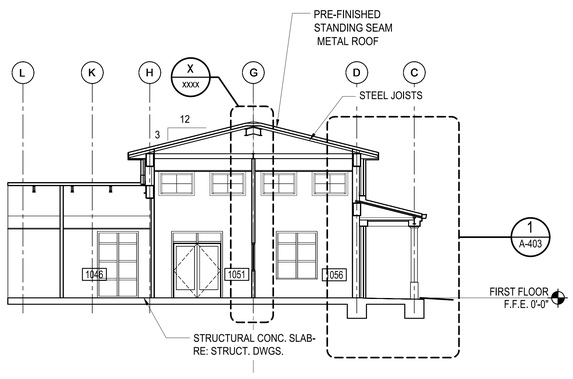

5 A-301 BUILDING SECTION
SCALE: 1/8"=1'-0"

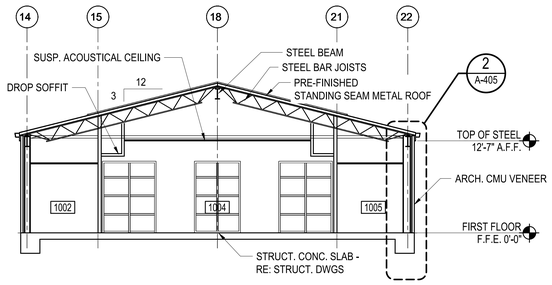

6 A-301 BUILDING SECTION
SCALE: 1/8"=1'-0"

0 4' 8' 16' 24'

SCALE: 1/8"= 1'-0"

NO.	DATE	BY	DESCRIPTION
			REVISIONS

Johnson, Mirmiran & Thompson, Inc. Johnson, Mirmiran & Thompson, P.A.
ARCHITECTS/ENGINEERS PLANNING SURVEYING MANAGEMENT
P.O. BOX 515, GREENWOOD, MISSISSIPPI • (662) 455-6422

USDA Agricultural Research Service

USDA AGRICULTURAL RESEARCH SERVICE
SUGARCANE RESEARCH LABORATORY
HOUMA, LOUISIANA

BUILDING SECTIONS

A-E FIRM	USDA
PROJECT MANAGER	EPM
e	WN
DESIGNER	PPM
JLF	XXX
CHECKED BY	SAFETY & HEALTH
DRL	CM
JOB #	REAL PROPERTY
5825	JS

PROJECT NO. XXX
DATE 05/20/2026

AGRICULTURAL RESEARCH SERVICE
FACILITIES ENGINEERING BRANCH
5106 SUNNYSIDE AVENUE
BELTSVILLE, MD 20705-5100

SHEET A-301
48 OF 176

REGISTERED ARCHITECT
Robin Earl Terry
2515
Greenwood, MS
STATE OF MISSISSIPPI

C:\Users\MICHAE~1\Appdata\Local\Temp\AcPublish_26588\A301.dwg
May 20, 2026 - 8:53am

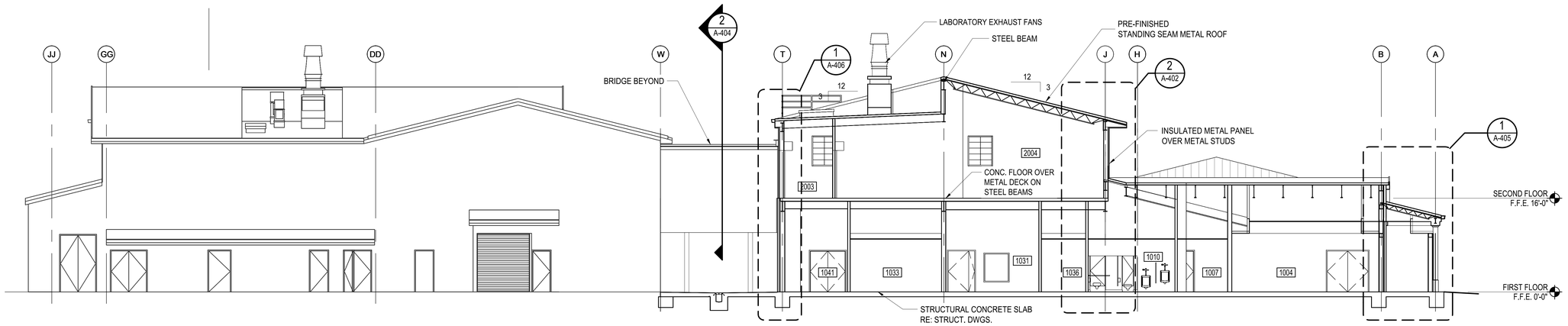

1 A-302 **BUILDING SECTION**
SCALE: 1/8"=1'-0"

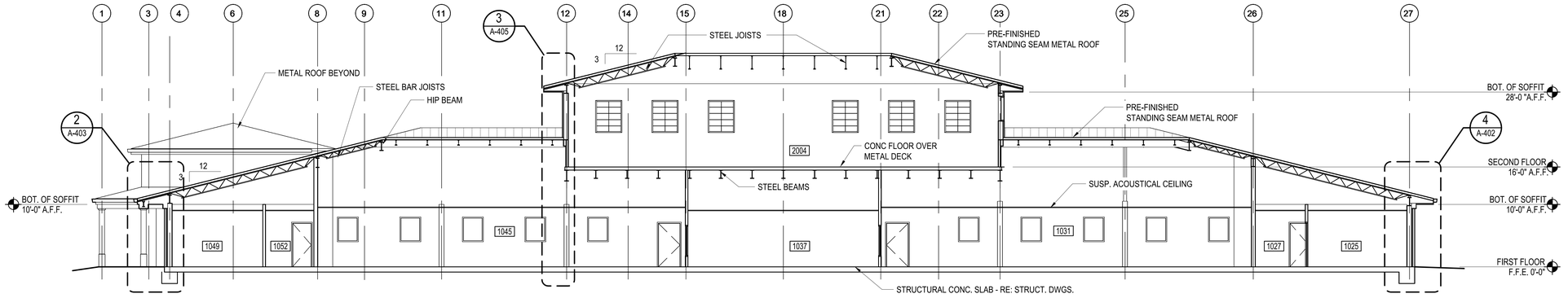

2 A-302 **BUILDING SECTION**
SCALE: 1/8"=1'-0"

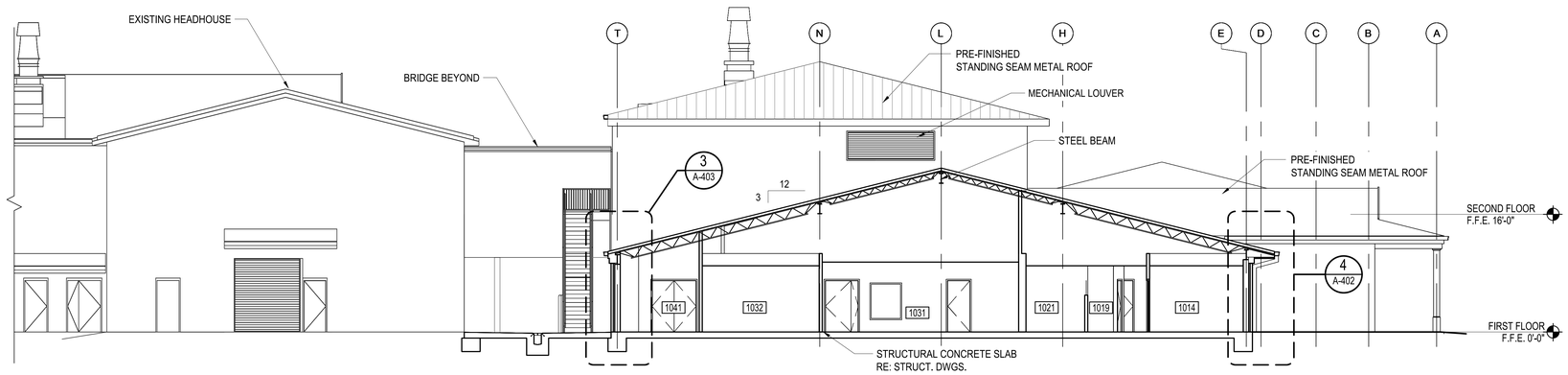

3 A-302 **BUILDING SECTION**
SCALE: 1/8"=1'-0"

0 4' 8' 16' 24'
SCALE: 1/8"= 1'-0"

NO.	DATE	BY	DESCRIPTION

REVISIONS

Johnson M'Adams PLLC
ARCHITECTS/ENGINEERS PLANNING SURVEYING ENVIRONMENT
P.O. BOX 513, GREENWOOD, MISSISSIPPI (662) 455-6943

USDA Agricultural Research Service

USDA AGRICULTURAL RESEARCH SERVICE
SUGARCANE RESEARCH LABORATORY
HOUMA, LOUISIANA

BUILDING SECTIONS

A-E FIRM	USDA
PROJECT MANAGER: REH	EPM: WN
DESIGNER: JLF	PPM: XXX
CHECKED BY: DRL	SAFETY & HEALTH: CM
JOB #: 5825	REAL PROPERTY: JS

PROJECT NO. XXX
DATE 05/20/2026

AGRICULTURAL RESEARCH SERVICE
FACILITIES ENGINEERING BRANCH
5106 SUNNYSIDE AVENUE
BELTSVILLE, MD 20705-5100

SHEET A-302
49 OF 176

REGISTERED ARCHITECT Robin Earl Henry 2515 Greenwood, MS STATE OF MISSISSIPPI

C:\Users\MICHAE~1\AppData\Local\Temp\AcPublish_28588\A302.dwg
May 20, 2026 - 8:32am

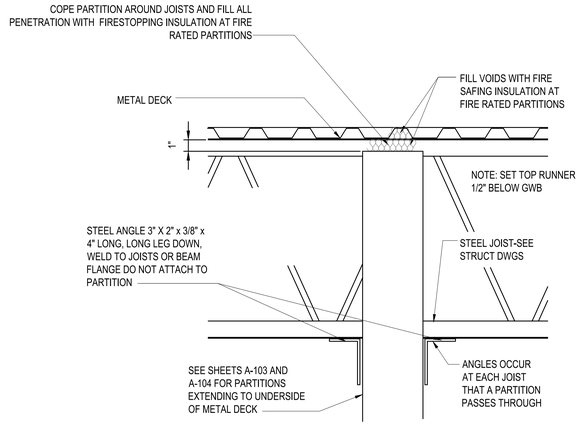

NOTE:
SEE SHEETS A-101.1 AND A-102
FOR FIRE RATED PARTITIONS

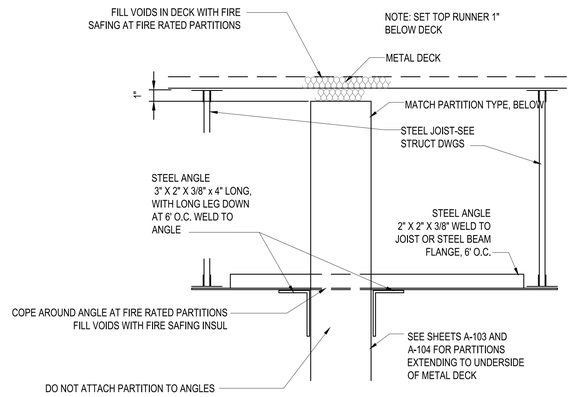

1 A-401 FIRE SAFING DETAILS
SCALE: 1-1/2"=1'-0"

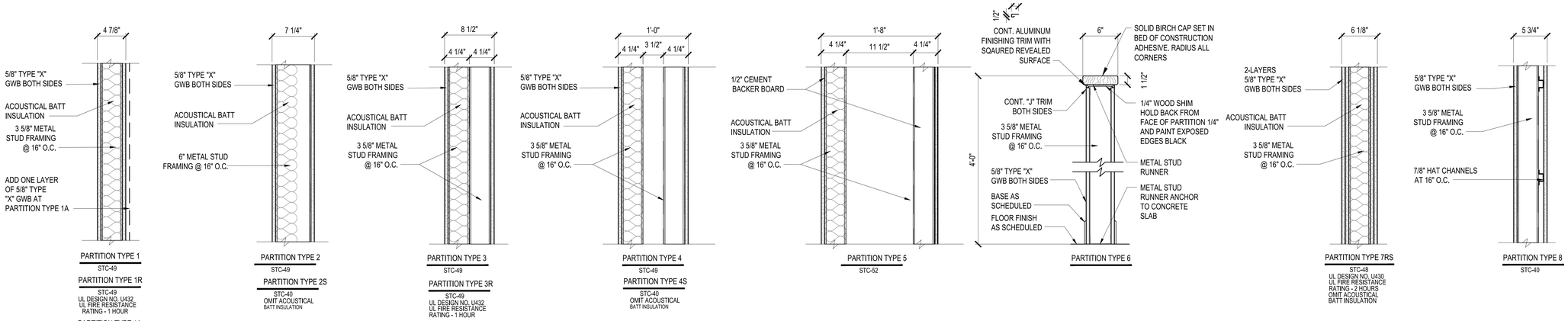

PARTITION TYPE NOTES

1. NOMINAL (NOM) PARTITION THICKNESSES ARE SHOWN ON THE FLOOR PLANS.
2. PARTITION TYPES ARE SHOWN ON FLOOR PLANS A-100 SERIES.
3. ALL GYPSUM PARTITION BOARD (GWB) THROUGHOUT SHALL BE TYPE "X".
4. ALL PARTITION TYPES WITH A "R" AS PART OF THE IDENTIFIER SHALL BE FIRE RATED.
5. PARTITION TYPES WITH STC RATINGS SHOW THE MINIMUM ACCEPTABLE CONSTRUCTION.
6. PARTITION TYPES WITH UL DESIGN NO. SHALL BE CONSTRUCTED TO UL STANDARDS.
7. 1/2" CEMENT BACKER BOARD SHALL BE SUBSTITUTED FOR GWB AT CERAMIC TILE PARTITION CONDITIONS.
8. ALL PARTITIONS THAT ENGAGE THE STRUCTURE ABOVE SHALL HAVE CONTINUOUS SLOTTED DEFLECTION TRACK.

2 A-401 PARTITION DETAILS
SCALE: 1-1/2"=1'-0"

0 6" 1' 2'
SCALE: 1 1/2"=1'-0"

C:\Users\JMOYAR~1\AppData\Local\Temp\AcPublish_20556\A401.dwg
May 20, 2026 - 8:32am

Johnson McAdams PLLC
ARCHITECTS/ENGINEERS PLANNING SURVEYING TECHNOLOGIST
P.O. BOX 513, GREENWOOD, MISSISSIPPI - (662) 455-4943

NO.	DATE	BY	DESCRIPTION
			REVISIONS

A-E FIRM	USDA
PROJECT MANAGER	EPM
REH	WN
DESIGNER	PPM
JLF	XXX
CHECKED BY	SAFETY & HEALTH
DRL	CM
JOB #	REAL PROPERTY
5825	JS

REGISTERED ARCHITECT
Robin Earl Henry
2515
Greenwood, MS
STATE OF MISSISSIPPI

USDA Agricultural Research Service

USDA AGRICULTURAL RESEARCH SERVICE
SUGARCANE RESEARCH LABORATORY
HOUMA, LOUISIANA

PARTITION TYPES AND DETAILS

PROJECT NO. XXX	AGRICULTURAL RESEARCH SERVICE FACILITIES ENGINEERING BRANCH 5106 SUNNYSIDE AVENUE BELTSVILLE, MD 20705-5100	SHEET A-401
DATE 05/20/2026		50 OF 176

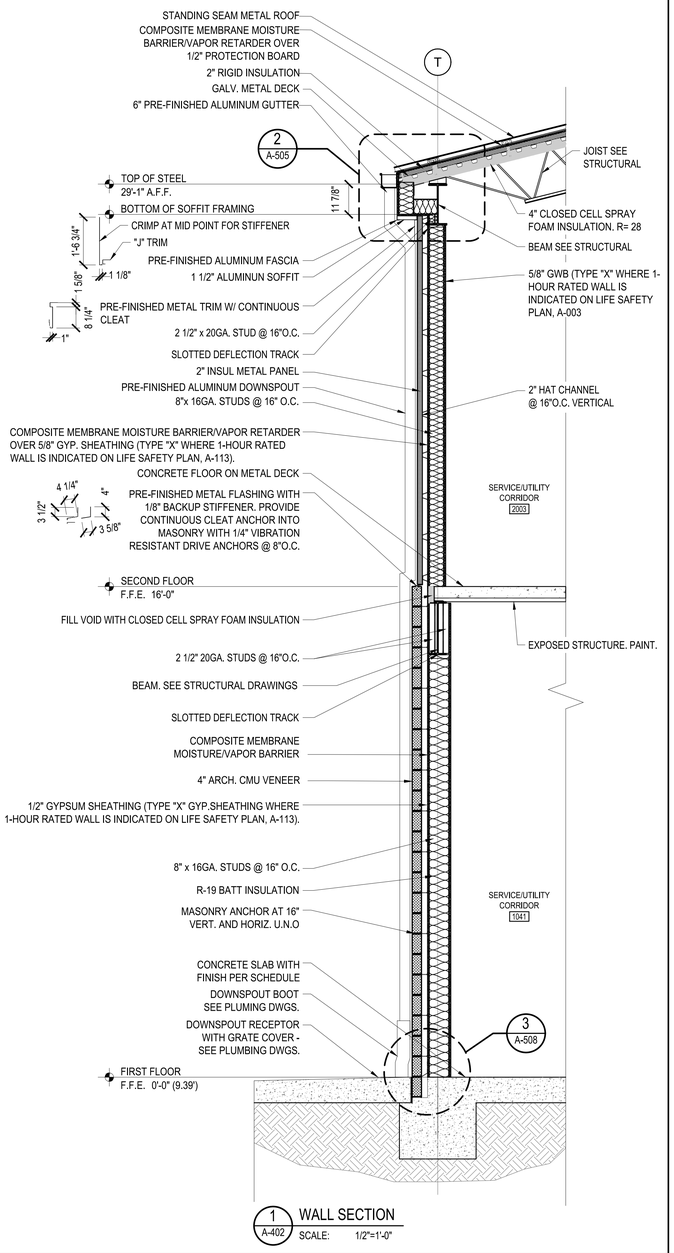

1 WALL SECTION
A-402 SCALE: 1/2"=1'-0"

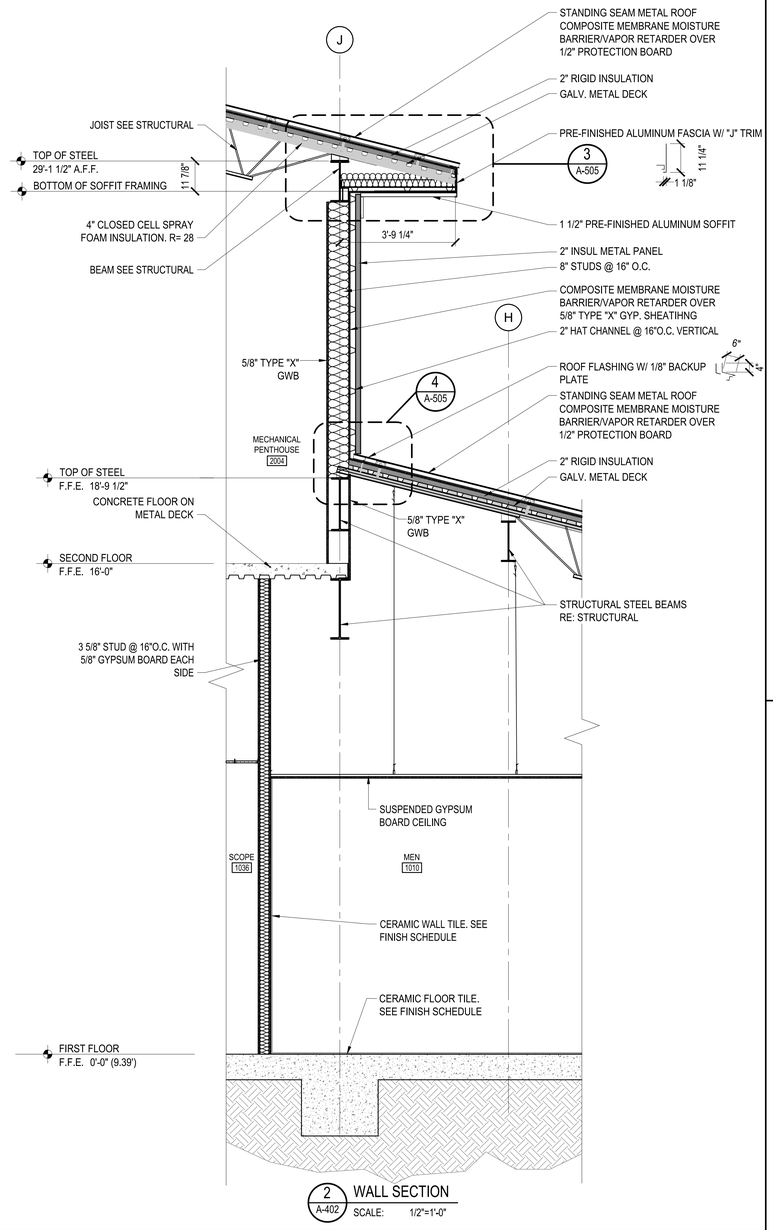

2 WALL SECTION
A-402 SCALE: 1/2"=1'-0"

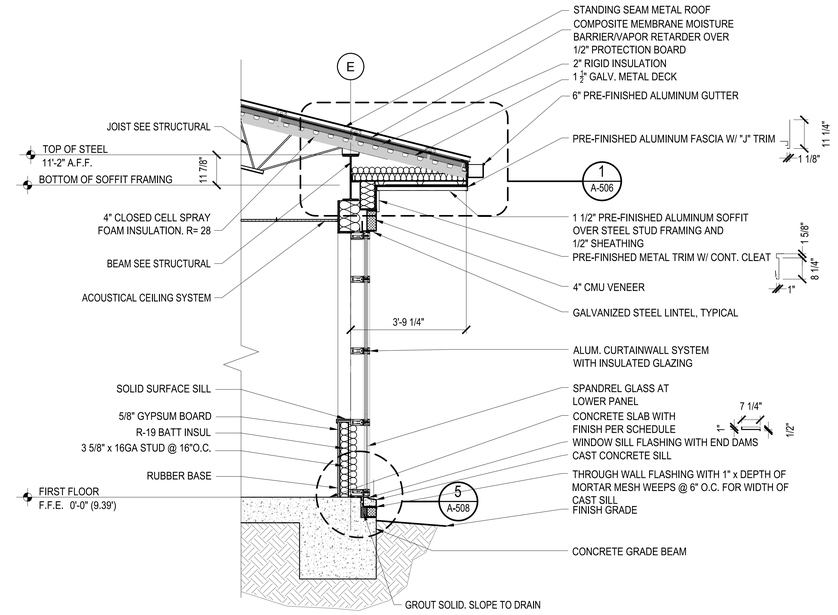

3 WALL SECTION
A-402 SCALE: 1/2"=1'-0"

4 WALL SECTION
A-402 SCALE: 1/2"=1'-0"

0 1' 2' 4' 8'

SCALE: 1/2"=1'-0"

Johnson, Mirmiran & Adams, PPC
CIVIL ENGINEERS/SURVEYORS PLANNERS SURVEYING ENVIRONMENT
P.O. BOX 513, GREENWOOD, MISSISSIPPI - (662) 455-6543

NO.	DATE	BY	DESCRIPTION

REVISIONS

REGISTERED ARCHITECT
Robin Earl Henry
2515
Commission No.
STATE OF MISSISSIPPI

A-E FIRM	USDA
PROJECT MANAGER	EPM
REH	WN
DESIGNER	PPM
JLF	XXX
CHECKED BY	SAFETY & HEALTH
DRL	CM
JOB #	REAL PROPERTY
5825	JS

USDA Agricultural Research Service

USDA AGRICULTURAL RESEARCH SERVICE
SUGARCANE RESEARCH LABORATORY
HOUMA, LOUISIANA

WALL SECTIONS

PROJECT NO. XXX	AGRICULTURAL RESEARCH SERVICE FACILITIES ENGINEERING BRANCH 5106 SUNNYSIDE AVENUE BELTSVILLE, MD 20705-5100	SHEET A-402
DATE 05/20/2026		51 OF 176

C:\Users\MKOVAC~1\AppData\Local\Temp\AcPublish_20556\A402.dwg
May 20, 2026 - 8:30am

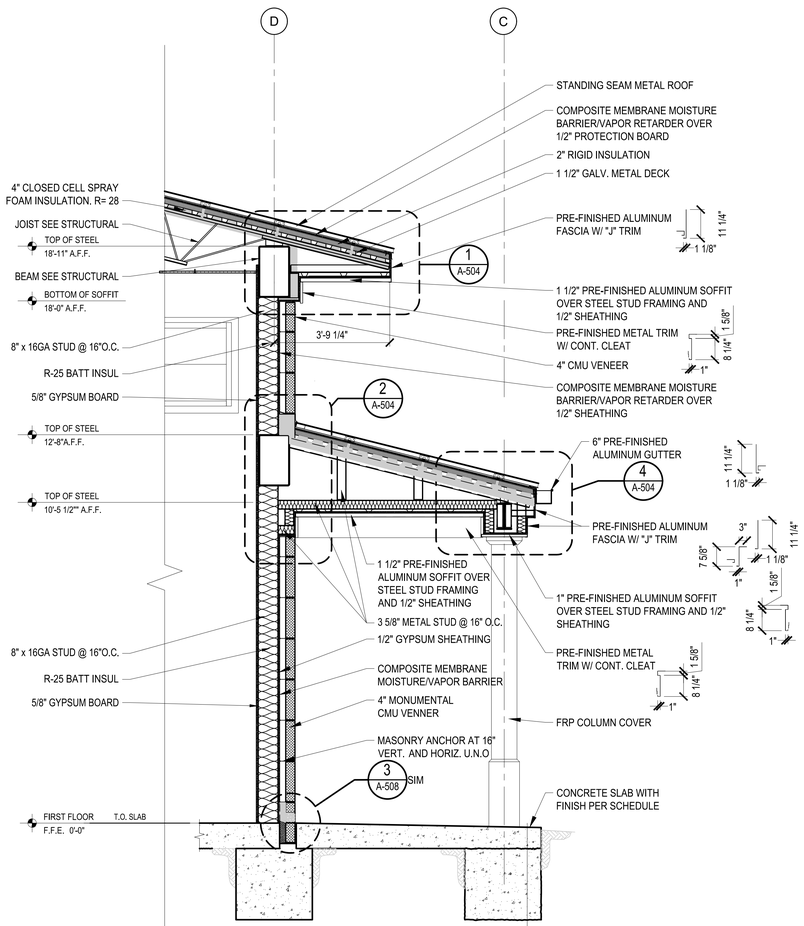

1 A-403 WALL SECTION
SCALE: 1/2"=1'-0"

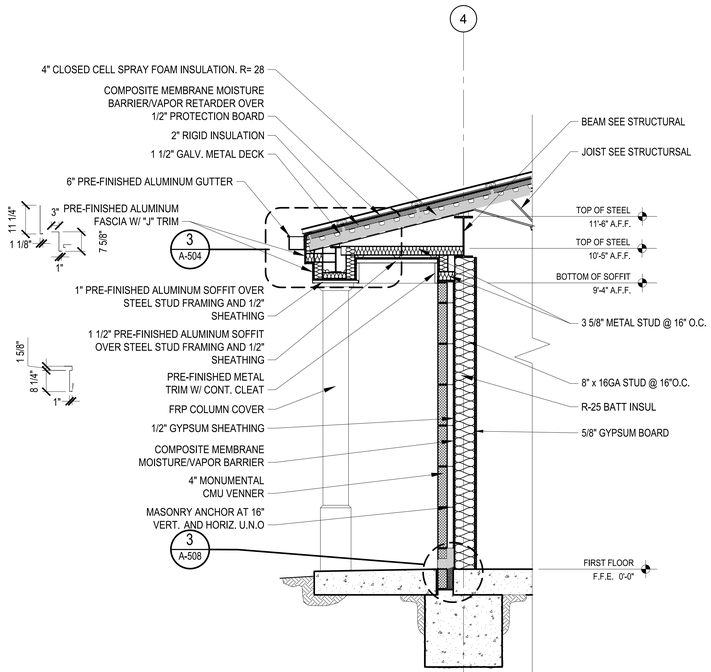

2 A-403 WALL SECTION
SCALE: 1/2"=1'-0"

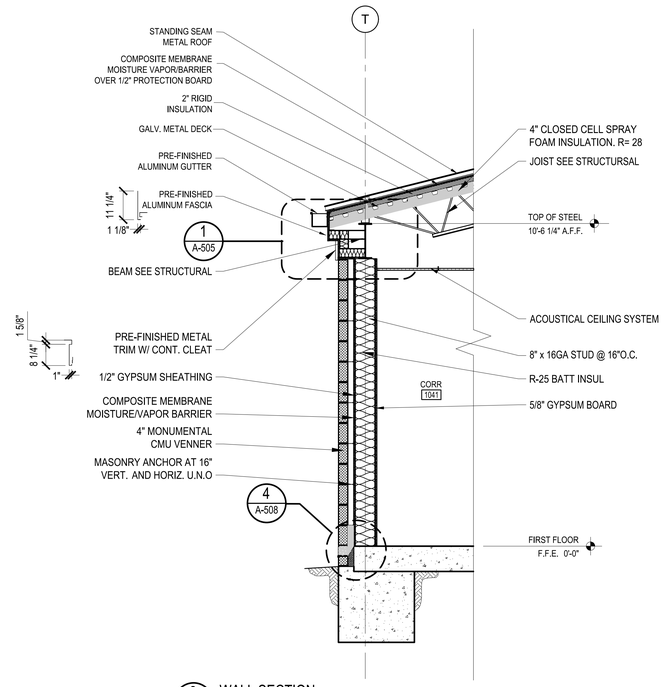

3 A-403 WALL SECTION
SCALE: 1/2"=1'-0"

0 1' 2' 4' 8'
SCALE: 1/2"=1'-0"

Johnson McAdams PSM
ARCHITECTS/ENGINEERS PLANNING SURVEYING MANAGEMENT
P.O. BOX 513, GREENWOOD, MISSISSIPPI - (662) 455-4443

NO.	DATE	BY	DESCRIPTION

REVISIONS

REGISTERED ARCHITECT Robin Earl Henry 2515 Greenwood, MS STATE OF MISSISSIPPI

A-E FIRM	USDA
PROJECT MANAGER	REH
EPM	WN
DESIGNER	JLF
PPM	XXX
CHECKED BY	DRL
SAFETY & HEALTH	CM
JOB #	5825
REAL PROPERTY	JS

USDA Agricultural Research Service

USDA AGRICULTURAL RESEARCH SERVICE
SUGARCANE RESEARCH LABORATORY
HOUMA, LOUISIANA

WALL SECTIONS

PROJECT NO. XXX	AGRICULTURAL RESEARCH SERVICE FACILITIES ENGINEERING BRANCH 5106 SUNNYSIDE AVENUE BELTSVILLE, MD 20705-5100	SHEET A-403
DATE 05/20/2026		52 OF 176

C:\Users\JMCHAE~1\AppData\Local\Temp\AcPublish_20588\A403.dwg
May 20, 2026 - 8:33am

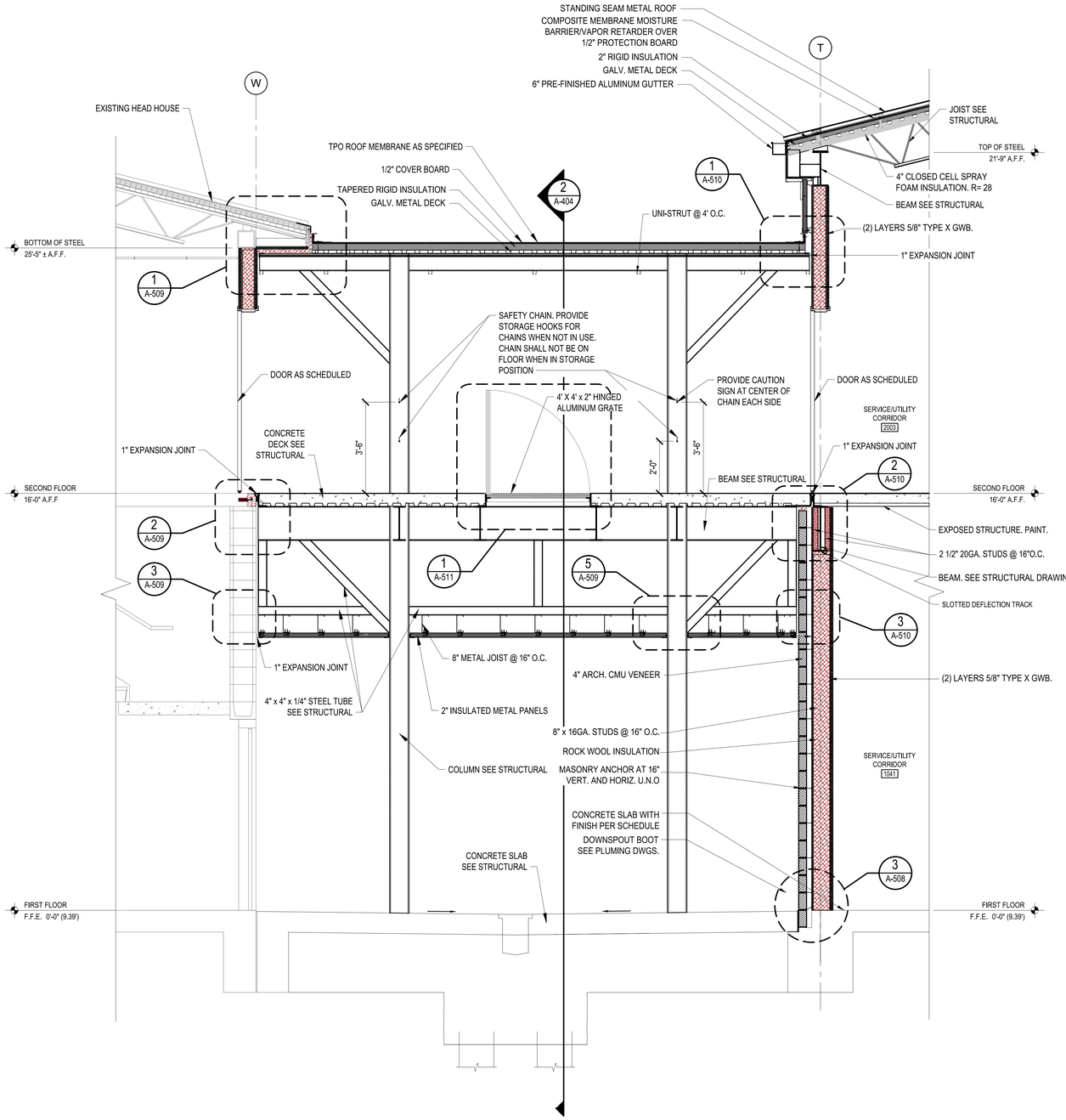

1 A-404 WALL SECTION
SCALE: 1/2"=1'-0"

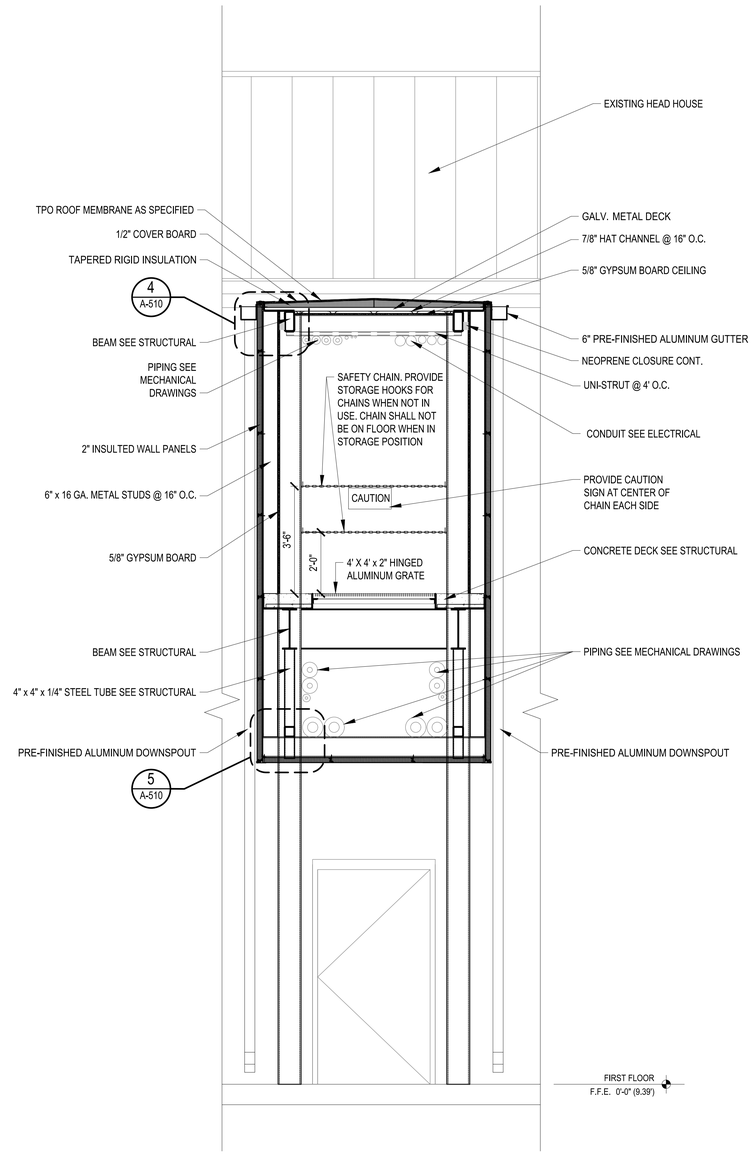

2 A-404 WALL SECTION
SCALE: 1/2"=1'-0"

0 1' 2' 4' 8'
SCALE: 1/2"=1'-0"

NO.	DATE	BY	DESCRIPTION
			REVISIONS

A-E FIRM	USDA
PROJECT MANAGER	REH
EPM	WN
DESIGNER	JLF
PPM	XXX
CHECKED BY	DRL
SAFETY & HEALTH	CM
JOB #	5825
REAL PROPERTY	JS

USDA Agricultural Research Service

USDA AGRICULTURAL RESEARCH SERVICE
SUGARCANE RESEARCH LABORATORY
HOUMA, LOUISIANA

WALL SECTIONS

PROJECT NO. XXX	AGRICULTURAL RESEARCH SERVICE FACILITIES ENGINEERING BRANCH 5106 SUNNYSIDE AVENUE BELTSVILLE, MD 20705-5100	SHEET A-404
DATE 05/20/2026		53 OF 176

REGISTERED ARCHITECT Robin Earl Henry 2515 Greenwood, MS STATE OF MISSISSIPPI

C:\Users\WCHAE~1\AppData\Local\Temp\AcPublish_28588\A404.dwg
May 20, 2026 - 8:33am

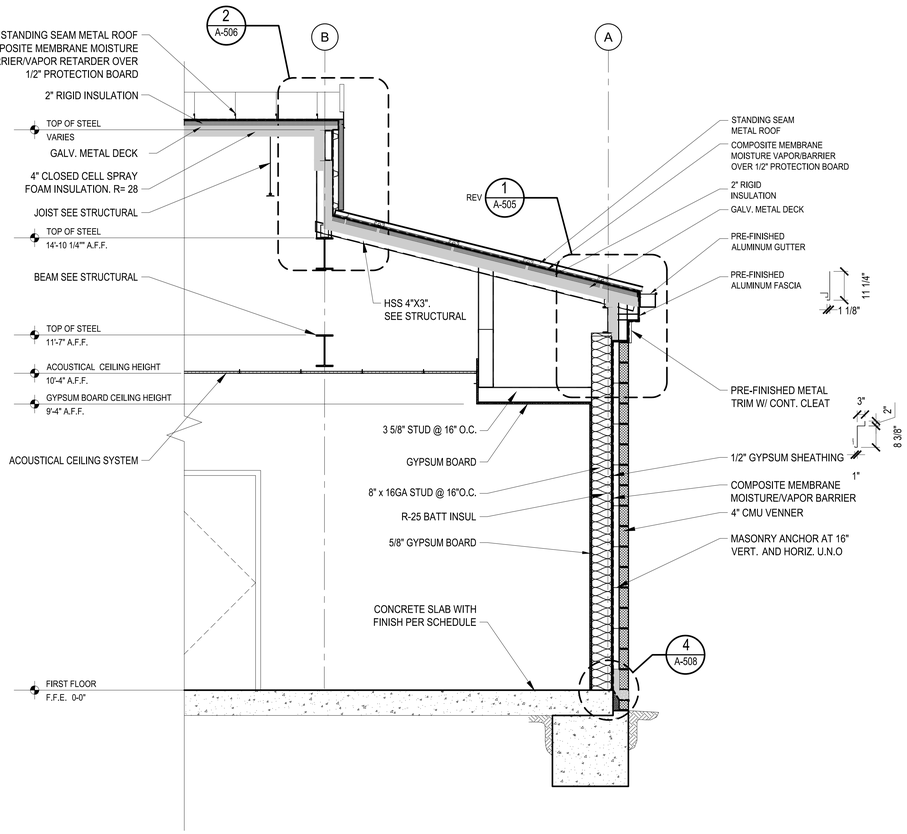

1 A-405 WALL SECTION
SCALE: 1/2"=1'-0"

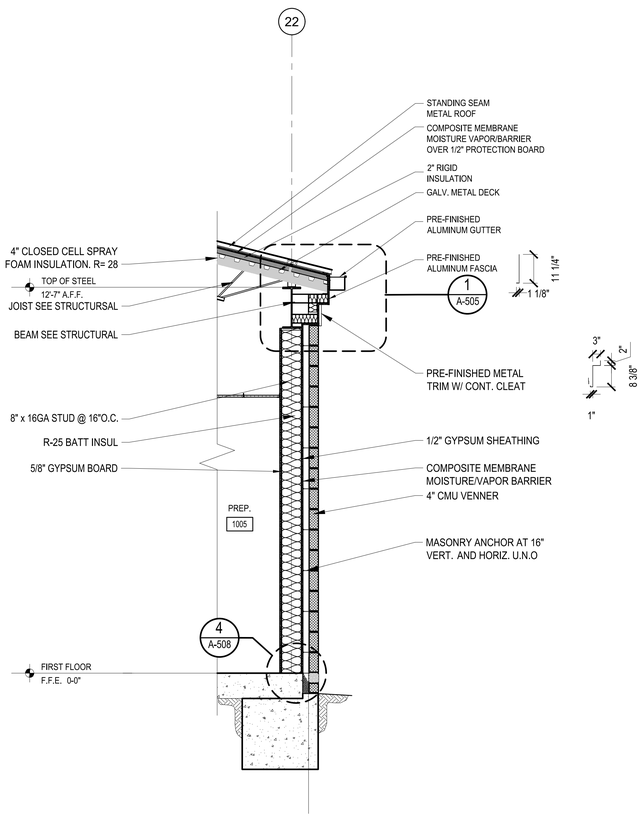

2 A-405 WALL SECTION
SCALE: 1/2"=1'-0"

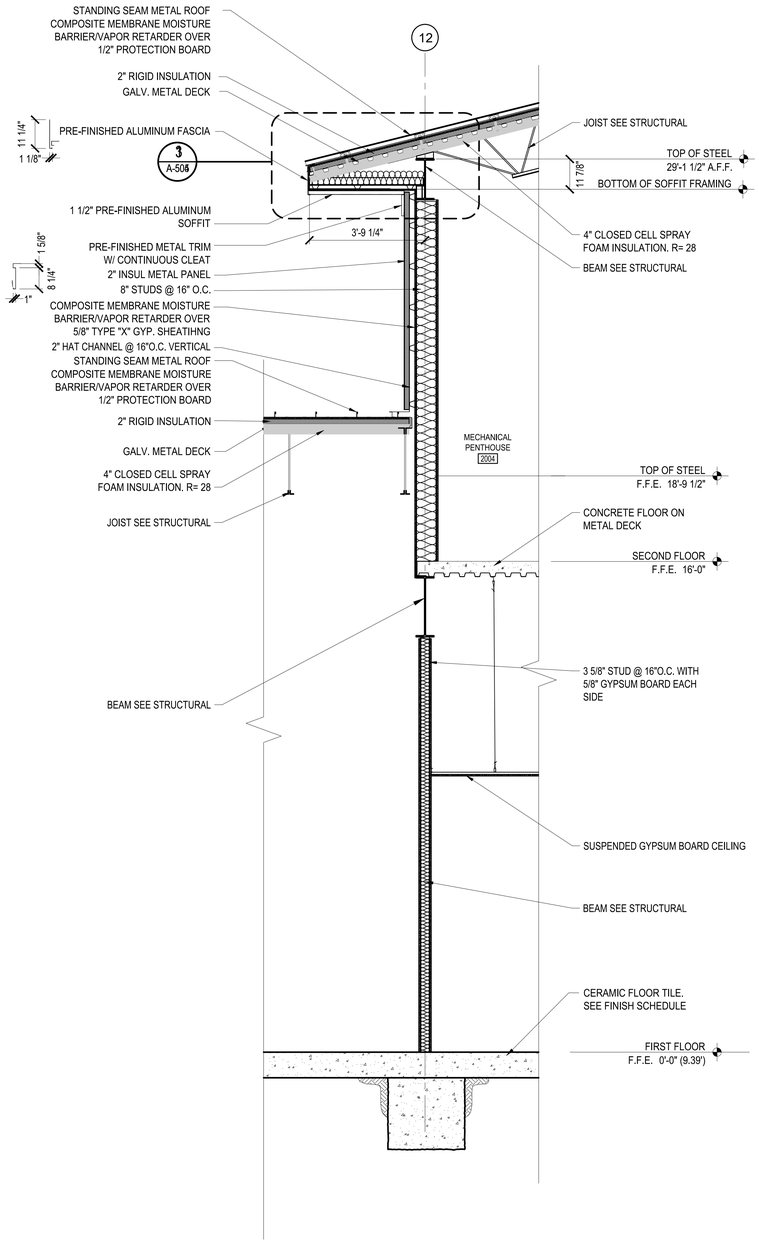

3 A-405 WALL SECTION
SCALE: 1/2"=1'-0"

0 1' 2' 4' 8'
SCALE: 1/2"=1'-0"

Johnson M'Adams PSC
ARCHITECTS/ENGINEERS PLANNERS SURVEYING
P.O. BOX 311, GREENWOOD, MISSISSIPPI - (662) 455-4943

NO.	DATE	BY	DESCRIPTION

REVISIONS

A-E FIRM	USDA
PROJECT MANAGER	REH
EPM	WN
DESIGNER	JLF
PPM	XXX
CHECKED BY	DRL
SAFETY & HEALTH	CM
JOB #	5825
REAL PROPERTY	JS

USDA Agricultural Research Service

USDA AGRICULTURAL RESEARCH SERVICE
SUGARCANE RESEARCH LABORATORY
HOUMA, LOUISIANA

WALL SECTIONS

PROJECT NO. XXX	AGRICULTURAL RESEARCH SERVICE FACILITIES ENGINEERING BRANCH 5106 SUNNYSIDE AVENUE BELTSVILLE, MD 20705-5100	SHEET A-405
DATE 05/20/2026		54 OF 176

REGISTERED ARCHITECT
Robin Earl Henry
2515
Greenwood, MS
STATE OF MISSISSIPPI

C:\Users\JMCHAE~1\AppData\Local\Temp\AcPublish_28588\A405.dwg
May 20, 2026 - 8:32am

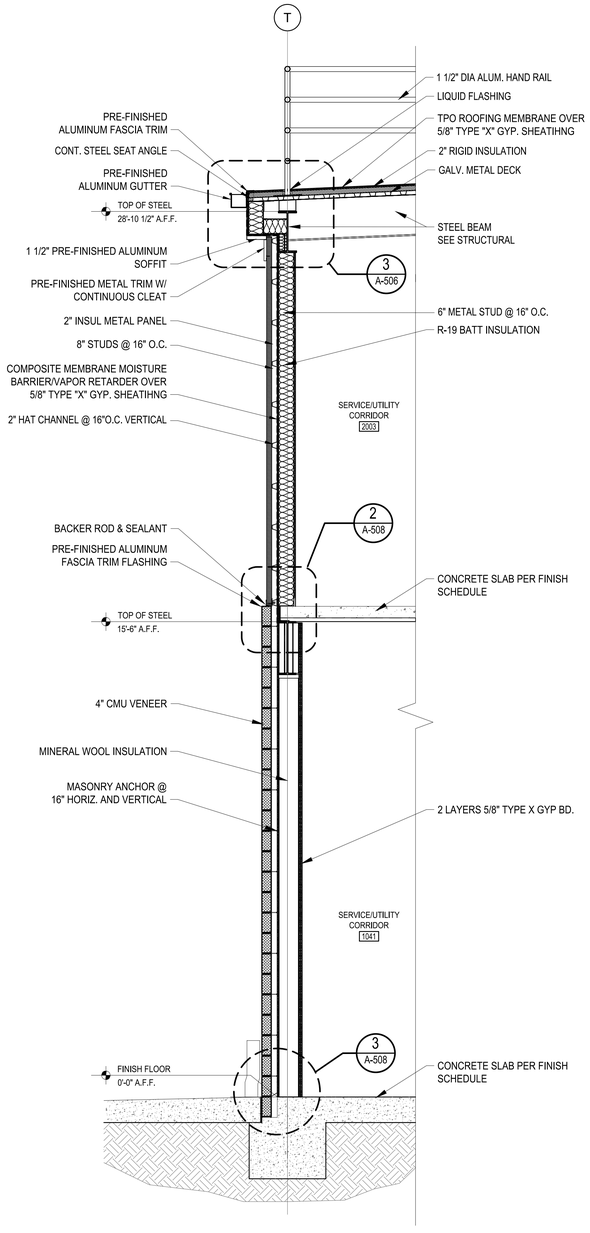

1 A-406 WALL SECTION
SCALE: 1/2"=1'-0"

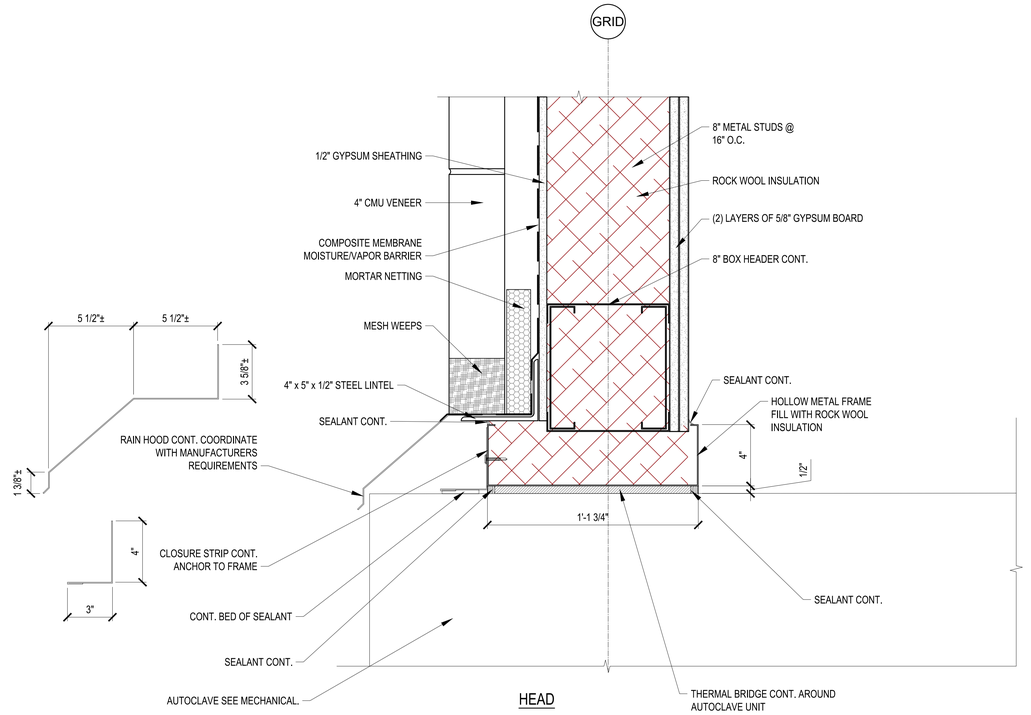

HEAD

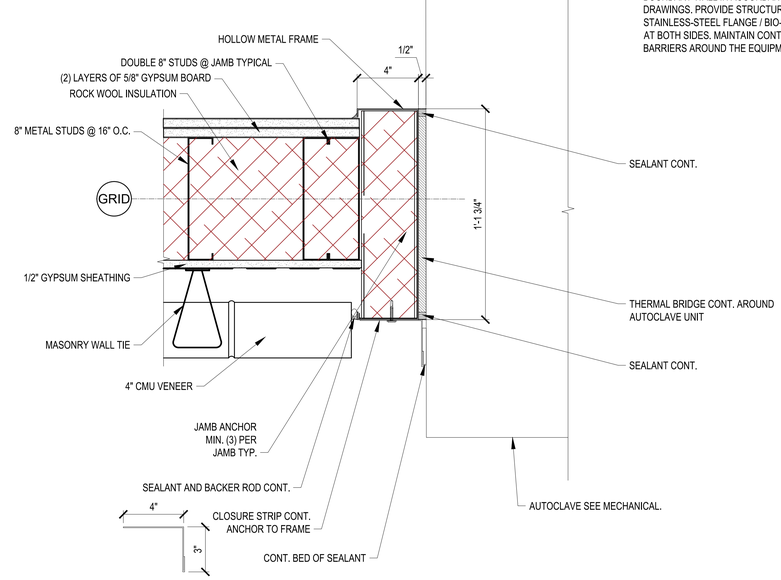

JAMB

2 A-406 AUTOCLAVE DETAIL
SCALE: 1/2"=1'-0"

AUTOCLAVE GENERAL NOTE

1. PASS-THROUGH AUTOCLAVE SHALL BE INSTALLED THROUGH THE CONTAINMENT / LAB BOUNDARY WALL IN ACCORDANCE WITH MANUFACTURER'S CERTIFIED INSTALLATION DRAWINGS. PROVIDE STRUCTURAL FRAMED OPENING, CONTINUOUS SEALED STAINLESS-STEEL FLANGE / BIO-SEAL ASSEMBLY AND SEALED WALL / FLOOR FINISHES AT BOTH SIDES. MAINTAIN CONTINUOUS AIR, WATER, VAPOR, THERMAL, AND PEST BARRIERS AROUND THE EQUIPMENT PENETRATION.

0 3" 6" 1' SCALE: 3"=1'-0"

0 1' 2' 4' 8' SCALE: 1/2"=1'-0"

Johnson, Mirmiran & Thompson, Inc. ARCHITECTS/ENGINEERS PLANNING SURVEYING MANAGEMENT P.O. BOX 513, GREENWOOD, MISSISSIPPI - (662) 455-4422

NO.	DATE	BY	DESCRIPTION
			REVISIONS

USDA Agricultural Research Service

USDA AGRICULTURAL RESEARCH SERVICE
SUGARCANE RESEARCH LABORATORY
HOUMA, LOUISIANA

WALL SECTIONS

A-E FIRM	USDA
PROJECT MANAGER	REH
EPM	WN
DESIGNER	JLF
PPM	XXX
CHECKED BY	DRL
SAFETY & HEALTH	CM
JOB #	5825
REAL PROPERTY	JS

REGISTERED ARCHITECT Robb Earlhart 2515 Greenwood, MS STATE OF MISSISSIPPI

PROJECT NO.	AGRICULTURAL RESEARCH SERVICE FACILITIES ENGINEERING BRANCH 5106 SUNNYSIDE AVENUE BELTSVILLE, MD 20705-5100	SHEET
XXX		A-406
DATE		55 OF 176
05/20/2026		

C:\Users\MICHAE~1\AppData\Local\Temp\AcPublish_28588\A406.dwg
May 20, 2026 - 8:33am

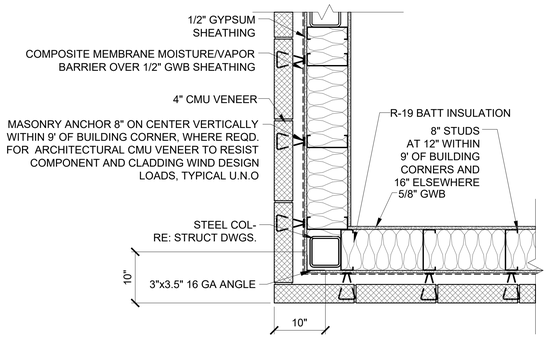

1 A-501 PLAN DETAIL
SCALE: 1"=1'-0"

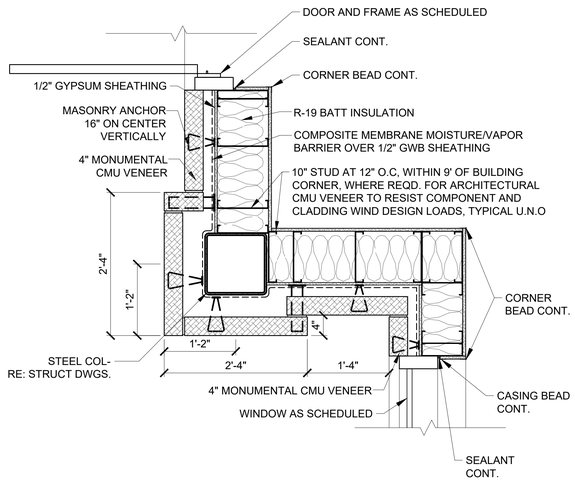

2 A-501 PLAN DETAIL
SCALE: 1"=1'-0"

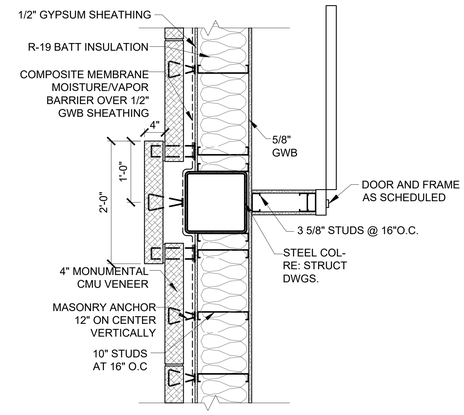

3 A-501 PLAN DETAIL
SCALE: 1"=1'-0"

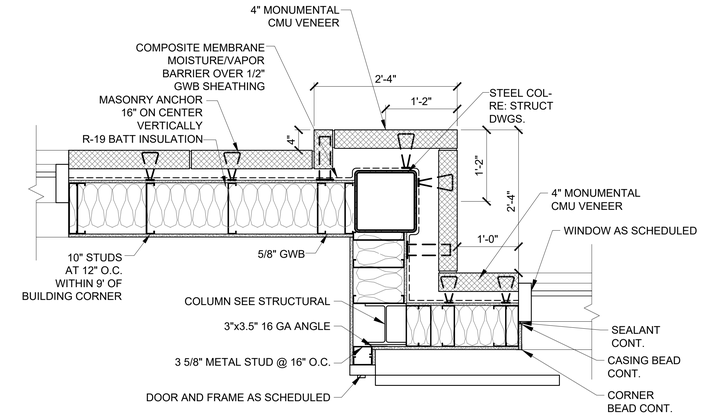

4 A-501 PLAN DETAIL
SCALE: 1"=1'-0"

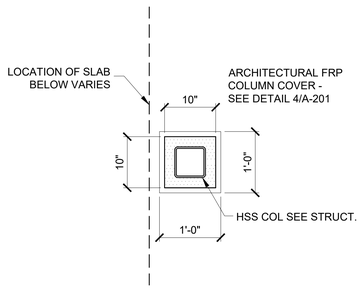

5 A-501 PLAN DETAIL
SCALE: 1"=1'-0"

6 A-501 PLAN DETAIL
SCALE: 1"=1'-0"

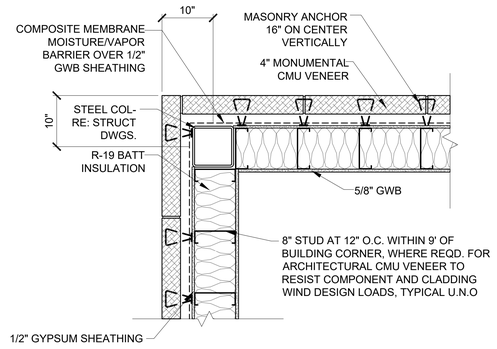

7 A-501 PLAN DETAIL
SCALE: 1"=1'-0"

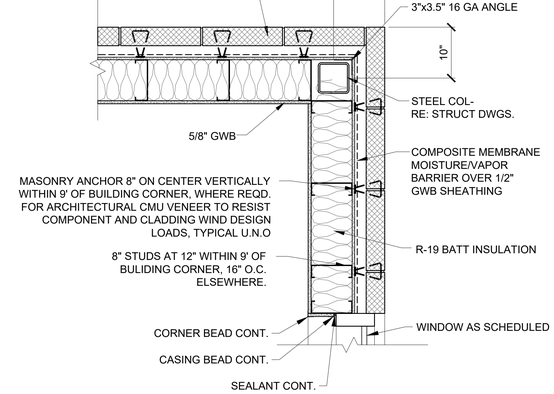

8 A-501 PLAN DETAIL
SCALE: 1"=1'-0"

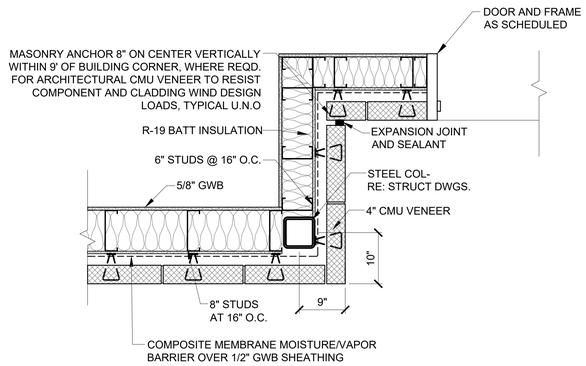

9 A-501 PLAN DETAIL
SCALE: 1"=1'-0"

NOTES:

1. STUDS IN EXTERIOR WALLS SHALL BE 16GA X 1 5/8" FLANGE METAL STUDS.

REGISTERED ARCHITECT
Robb Earl Henry
2015
Greenwood, MS
STATE OF MISSISSIPPI

Johnson McAdams PLLC
ARCHITECTS/ENGINEERS PLANNING SURVEYING
P.O. BOX 513, GREENWOOD, MISSISSIPPI - (662) 455-6963

NO.	DATE	BY	DESCRIPTION

REVISIONS

A-E FIRM	USDA
PROJECT MANAGER	EPM
REH	WN
DESIGNER	PPM
JLF	XXX
CHECKED BY	SAFETY & HEALTH
DRL	CM
JOB #	REAL PROPERTY
5825	JS

USDA Agricultural Research Service

USDA AGRICULTURAL RESEARCH SERVICE
SUGARCANE RESEARCH LABORATORY
HOUMA, LOUISIANA

PLAN DETAILS

PROJECT NO.	AGRICULTURAL RESEARCH SERVICE FACILITIES ENGINEERING BRANCH 5106 SUNNYSIDE AVENUE BELTSVILLE, MD 20705-5100	SHEET
XXX		A-501
DATE		56 OF 176
05/14/2026		

C:\Users\MJONAE~1\AppData\Local\Temp\AcPublish_28588\A501.dwg
May 20, 2026 - 8:32am

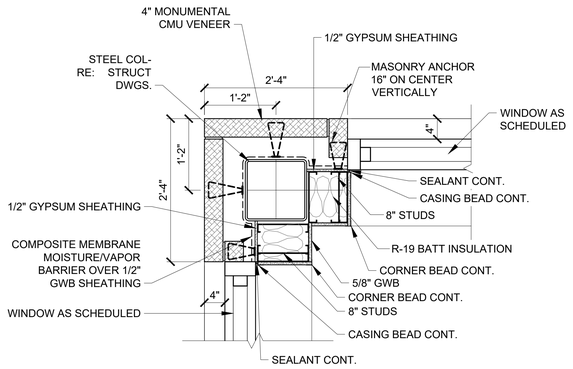

1 A-502 PLAN DETAIL
SCALE: 1"=1'-0"

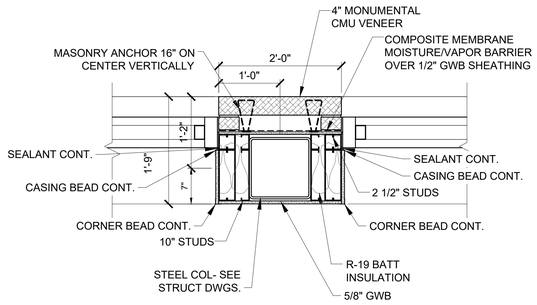

2 A-502 PLAN DETAIL
SCALE: 1"=1'-0"

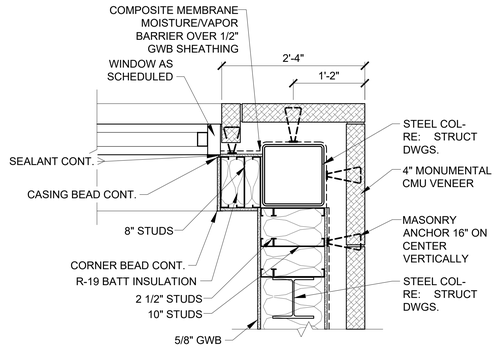

3 A-502 PLAN DETAIL
SCALE: 1"=1'-0"

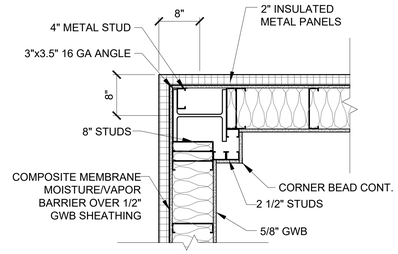

4 A-502 PLAN DETAIL
SCALE: 1"=1'-0"

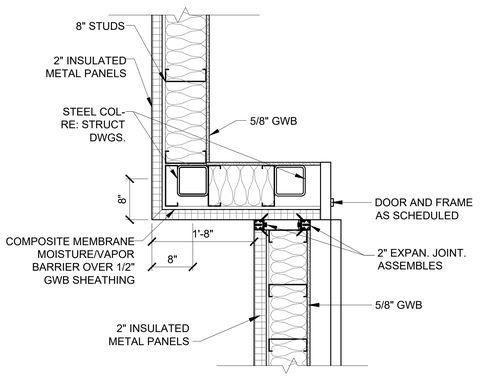

5 A-502 PLAN DETAIL
SCALE: 1"=1'-0"

NOTES:

1. STUDS IN EXTERIOR WALLS SHALL BE 16GA X 1 5/8" FLANGE METAL STUDS.

NO.	DATE	BY	DESCRIPTION

REVISIONS

THE Johnson McAdams PRINTING CO. INC.
ARCHITECTS ENGINEERS PLANNERS SURVEYING MANAGEMENT
P.O. BOX 515, GREENWOOD, MISSISSIPPI - 2602 455-6903

USDA Agricultural Research Service

USDA AGRICULTURAL RESEARCH SERVICE
SUGARCANE RESEARCH LABORATORY
HOUMA, LOUISIANA

PLAN DETAILS

A-E FIRM	USDA
PROJECT MANAGER REH	EPM WN
DESIGNER JLF	PPM XXX
CHECKED BY DRL	SAFETY & HEALTH CM
JOB # 5825	REAL PROPERTY JS

PROJECT NO. XXX
DATE 05/20/2026

AGRICULTURAL RESEARCH SERVICE
FACILITIES ENGINEERING BRANCH
5106 SUNNYSIDE AVENUE
BELTSVILLE, MD 20705-5100

SHEET A-502
57 OF 176

REGISTERED ARCHITECT
Robin Earl Henry
2515
Greenwood, MS
STATE OF MISSISSIPPI

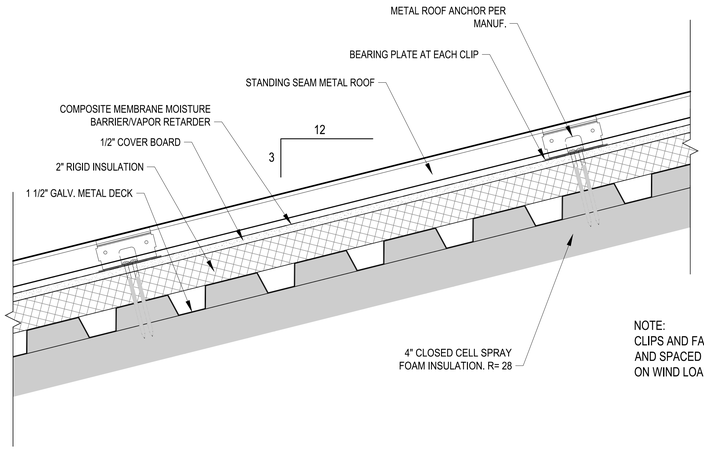

NOTE:
CLIPS AND FASTENERS SHALL BE DESIGNED AND SPACED TO RESIST WIND LOADS INDICATED ON WIND LOADING DIAGRAM ON STRUCT. DWGS.

1 A-503 TYPICAL ROOF ASSEMBLY DETAIL
SCALE: 3"=1'-0"

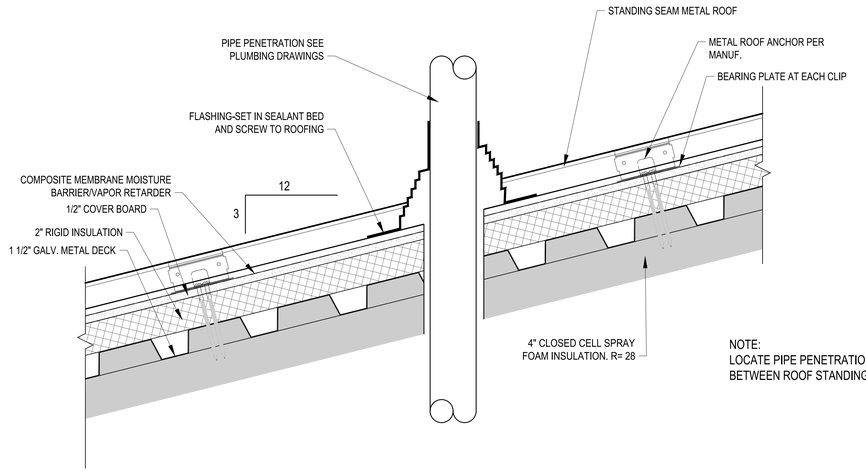

NOTE:
LOCATE PIPE PENETRATIONS BETWEEN ROOF STANDING SEAMS.

2 A-503 TYPICAL ROOF PENETRATION DETAIL
SCALE: 3"=1'-0"

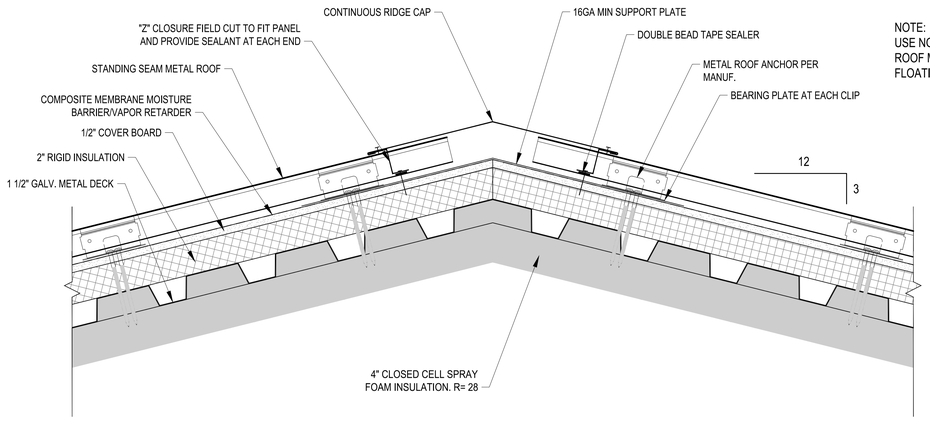

NOTE:
USE NON-STRUCTURAL STANDING SEAM ROOF MANUFACTURER'S STANDARD FLOATING RIDGE/HIP DETAILS

3 A-503 TYPICAL RIDGE DETAIL HIP (SIM.)
SCALE: 3"=1'-0"

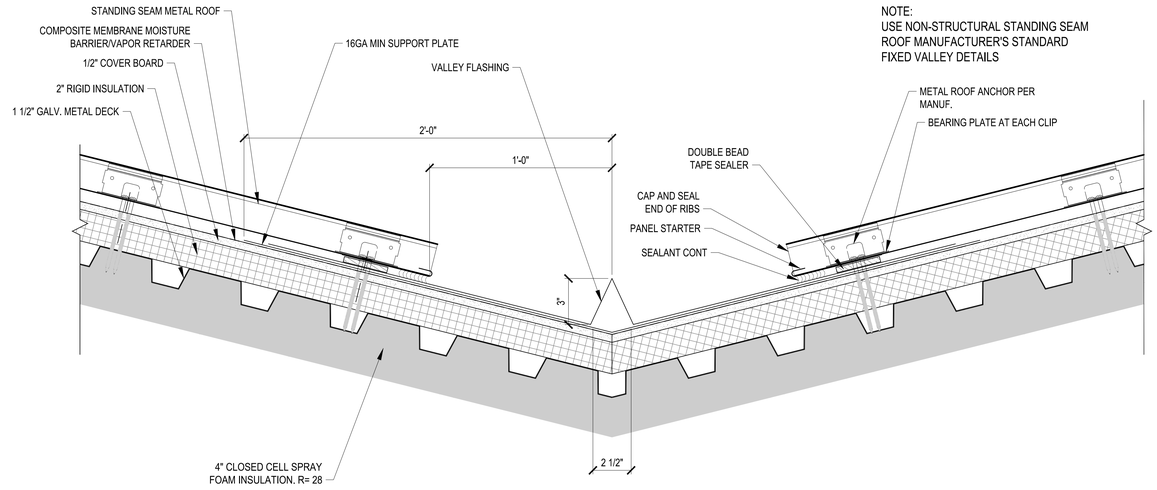

NOTE:
USE NON-STRUCTURAL STANDING SEAM ROOF MANUFACTURER'S STANDARD FIXED VALLEY DETAILS

4 A-503 TYPICAL YALLEY FLASHING DETAILS
SCALE: 3"=1'-0"

C:\Users\MICHAE~1\AppData\Local\Temp\AcPublish_28588\A503.dwg
May 20, 2026 - 8:32am

REGISTERED ARCHITECT
Robin Earl Henry
2515
Greenwood, MS
STATE OF MISSISSIPPI

jmt Johnson McAdams
ARCHITECTS ENGINEERS PLANNING SURVEYING MANAGEMENT
P.O. BOX 515, GREENWOOD, MISSISSIPPI (662) 453-6443

NO.	DATE	BY	DESCRIPTION

REVISIONS

A-E FIRM	USDA
PROJECT MANAGER REH	EPM WN
DESIGNER JLF	PPM XXX
CHECKED BY DRL	SAFETY & HEALTH CM
JOB # 5825	REAL PROPERTY JS

USDA Agricultural Research Service

USDA AGRICULTURAL RESEARCH SERVICE
SUGARCANE RESEARCH LABORATORY
HOUMA, LOUISIANA

ROOF DETAILS

PROJECT NO. XXX	AGRICULTURAL RESEARCH SERVICE FACILITIES ENGINEERING BRANCH 5106 SUNNYSIDE AVENUE BELTSVILLE, MD 20705-5100	SHEET A-503
DATE 05/20/2026		58 OF 176

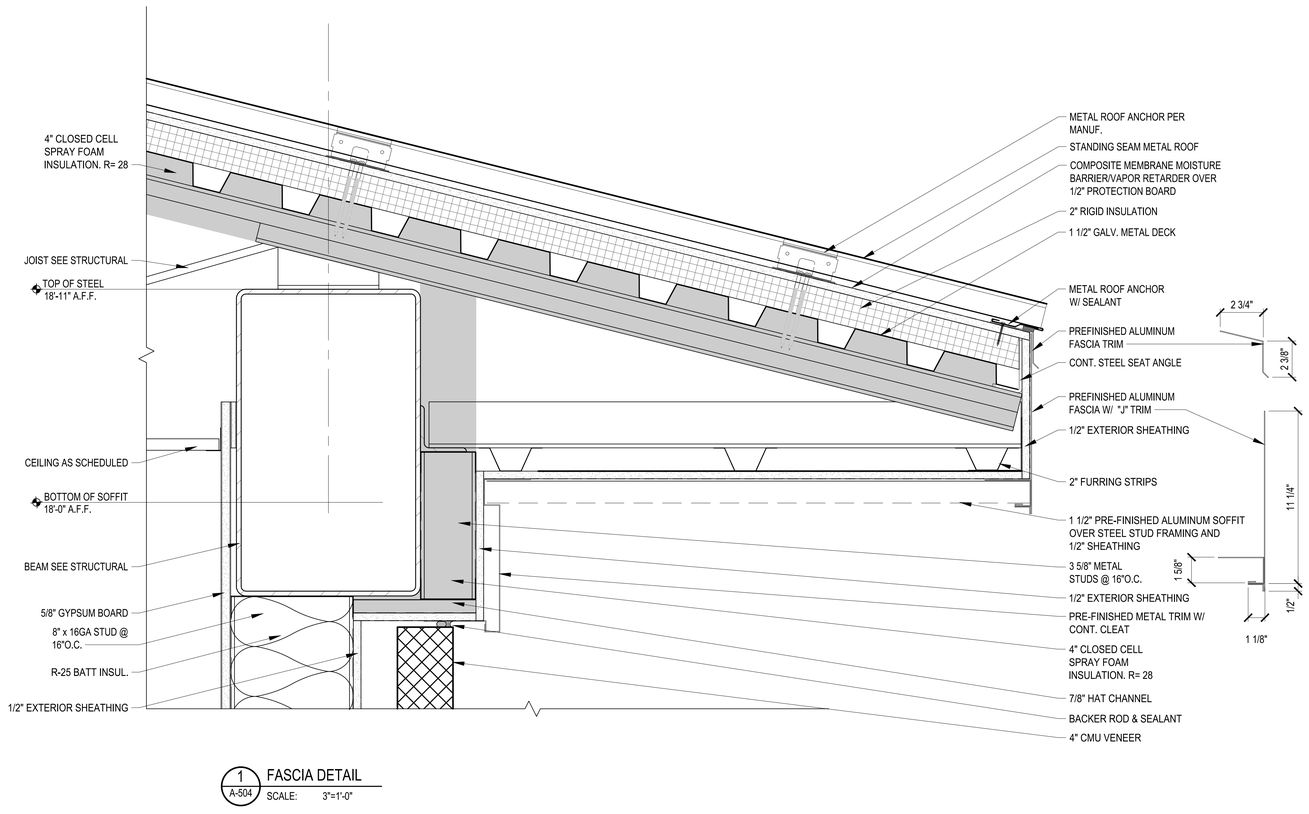

1 A-504 FASCIA DETAIL
SCALE: 3"=1'-0"

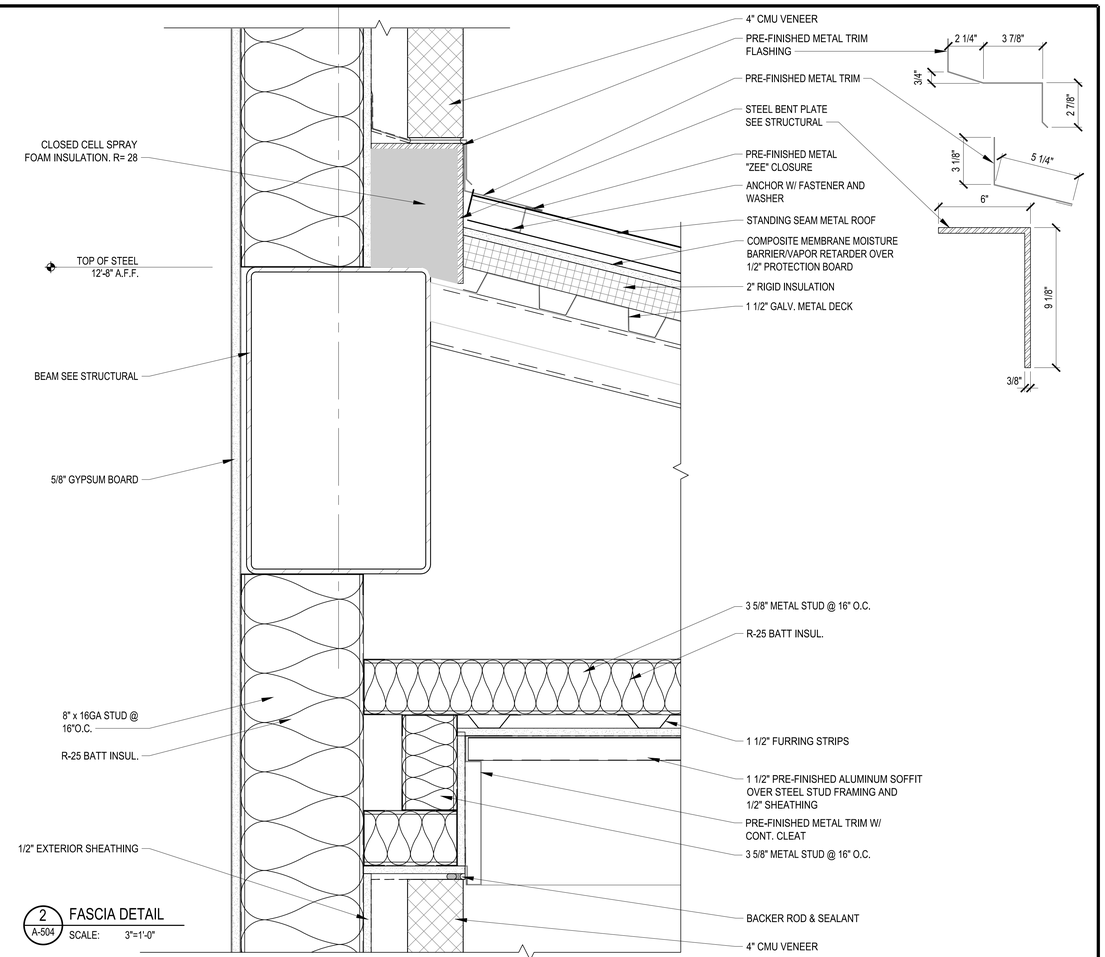

2 A-504 FASCIA DETAIL
SCALE: 3"=1'-0"

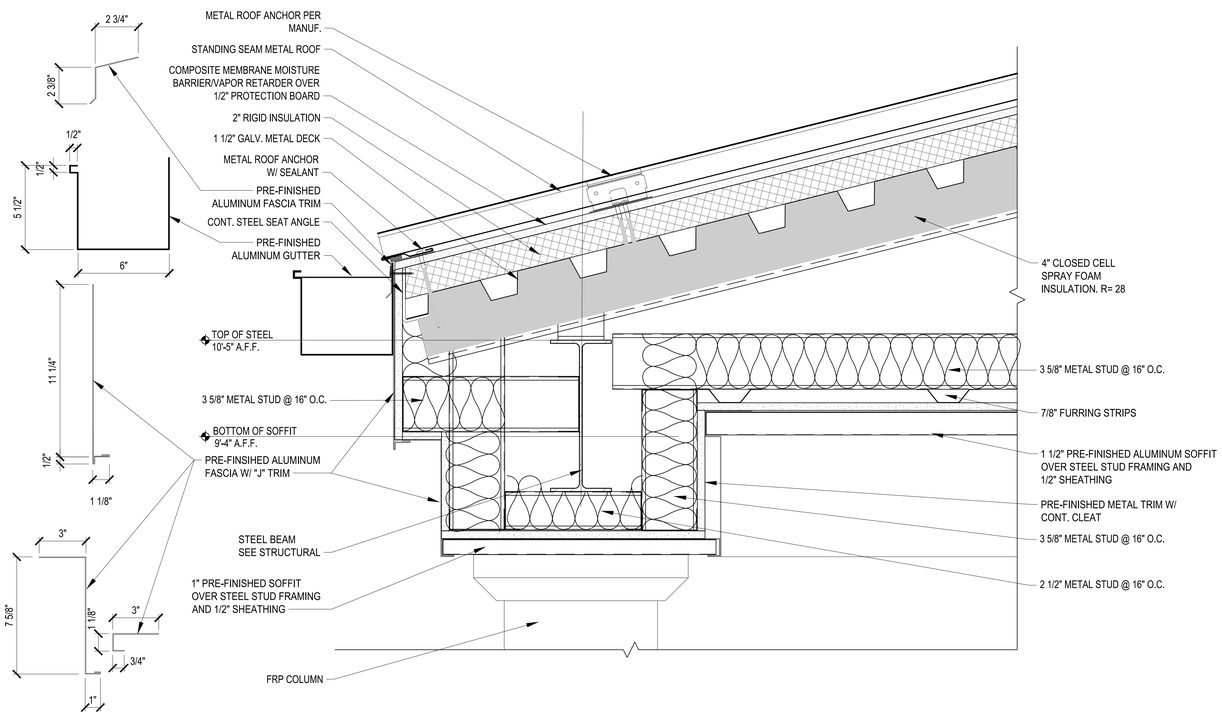

3 A-504 FASCIA DETAIL
SCALE: 3"=1'-0"

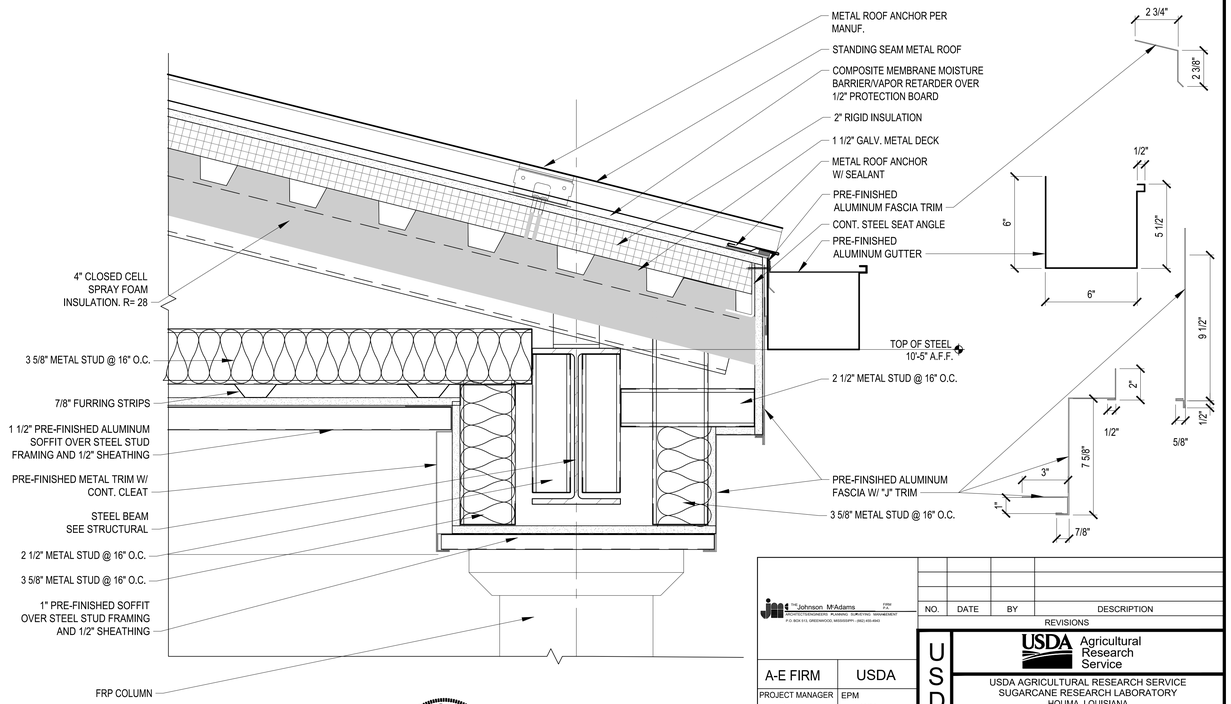

4 A-504 FASCIA DETAIL
SCALE: 3"=1'-0"

Johnson Mirmiran Adams PLLC
ARCHITECTS/ENGINEERS PLANNING SURVEYING MANAGEMENT
P.O. BOX 510 GREENWOOD, MISSISSIPPI (662) 455-6643

NO.	DATE	BY	DESCRIPTION
			REVISIONS

REGISTERED ARCHITECT — Robb Earl Henry — 2515 — Greenwood, MS — STATE OF MISSISSIPPI

0 3" 6" 1'
SCALE: 3"=1'-0"

USDA Agricultural Research Service

USDA AGRICULTURAL RESEARCH SERVICE
SUGARCANE RESEARCH LABORATORY
HOUMA, LOUISIANA

ROOF DETAILS

A-E FIRM	USDA
PROJECT MANAGER	REH
DESIGNER	JLF
CHECKED BY	DRL
JOB #	5825
EPM	WN
PPM	XXX
SAFETY & HEALTH	CM
REAL PROPERTY	JS

PROJECT NO. XXX
DATE 05/20/2026

AGRICULTURAL RESEARCH SERVICE
FACILITIES ENGINEERING BRANCH
5106 SUNNYSIDE AVENUE
BELTSVILLE, MD 20705-5100

SHEET A-504
59 OF 176

C:\Users\MICHAE~1\AppData\Local\Temp\AcPublish_28588\A504.dwg
May 20, 2026 - 8:33am

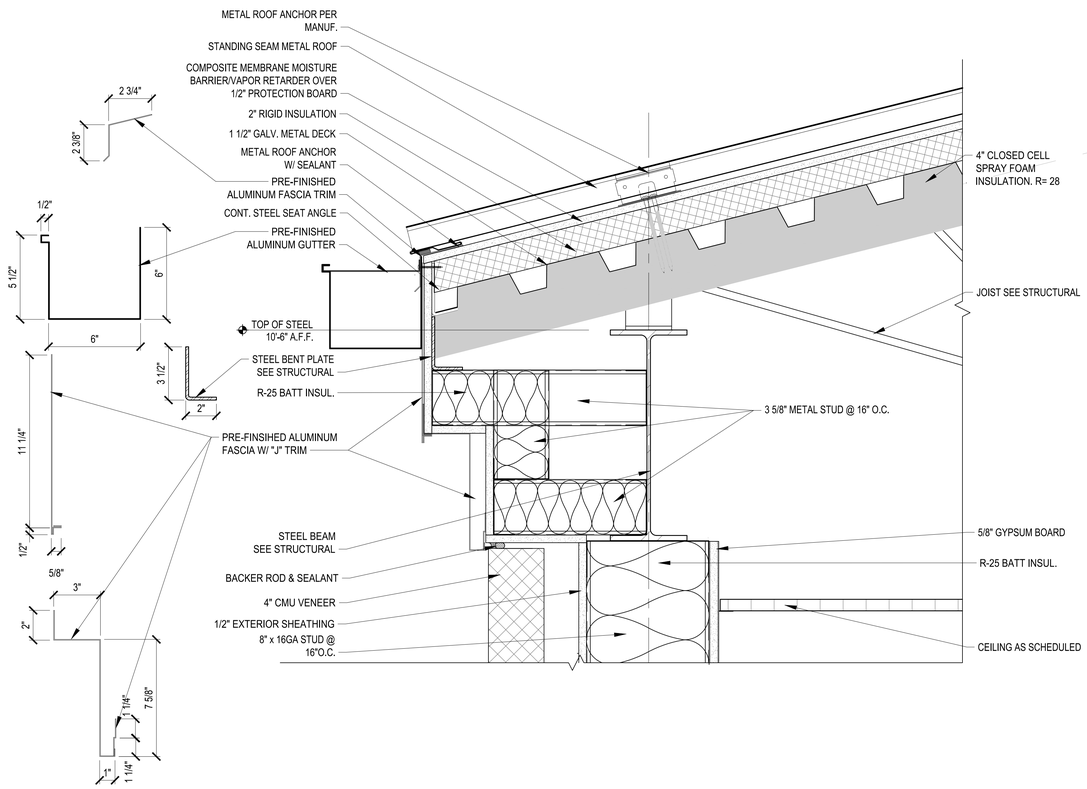

1 A-505 FASCIA DETAIL
SCALE: 3"=1'-0"

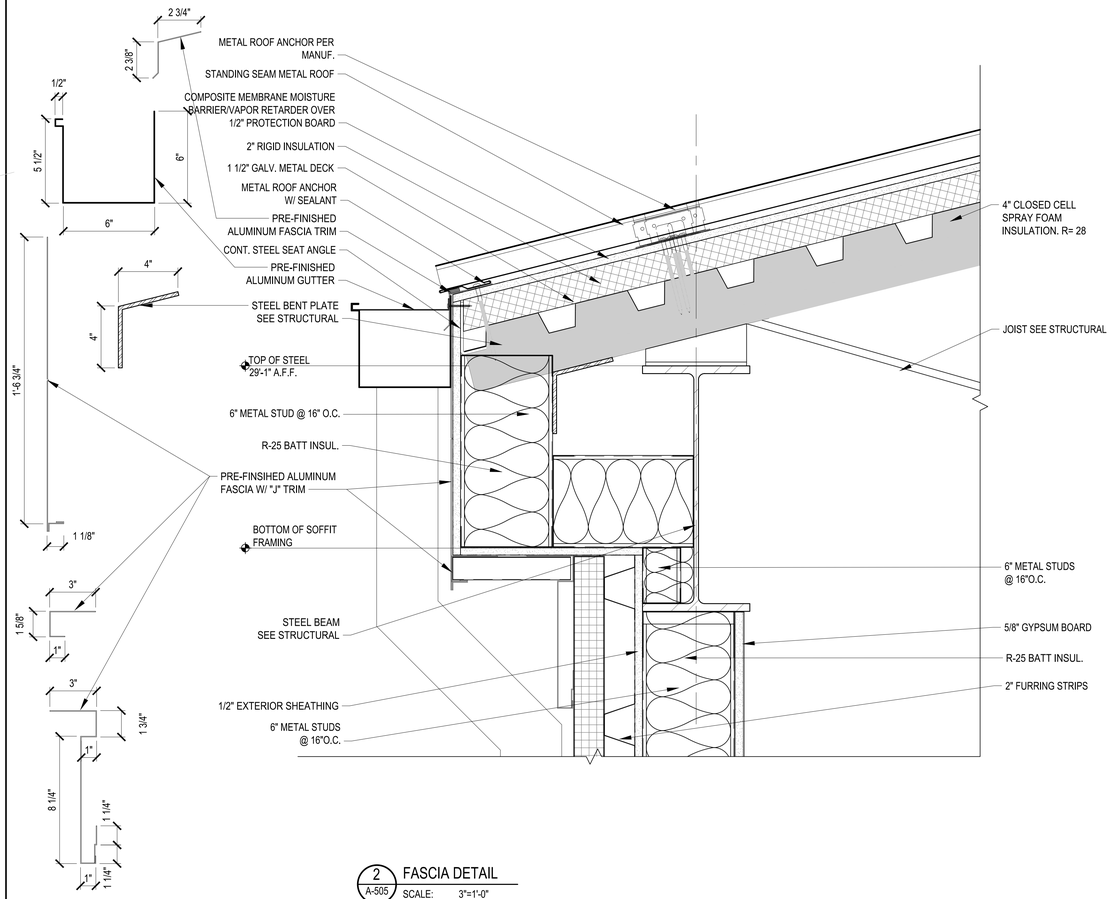

2 A-505 FASCIA DETAIL
SCALE: 3"=1'-0"

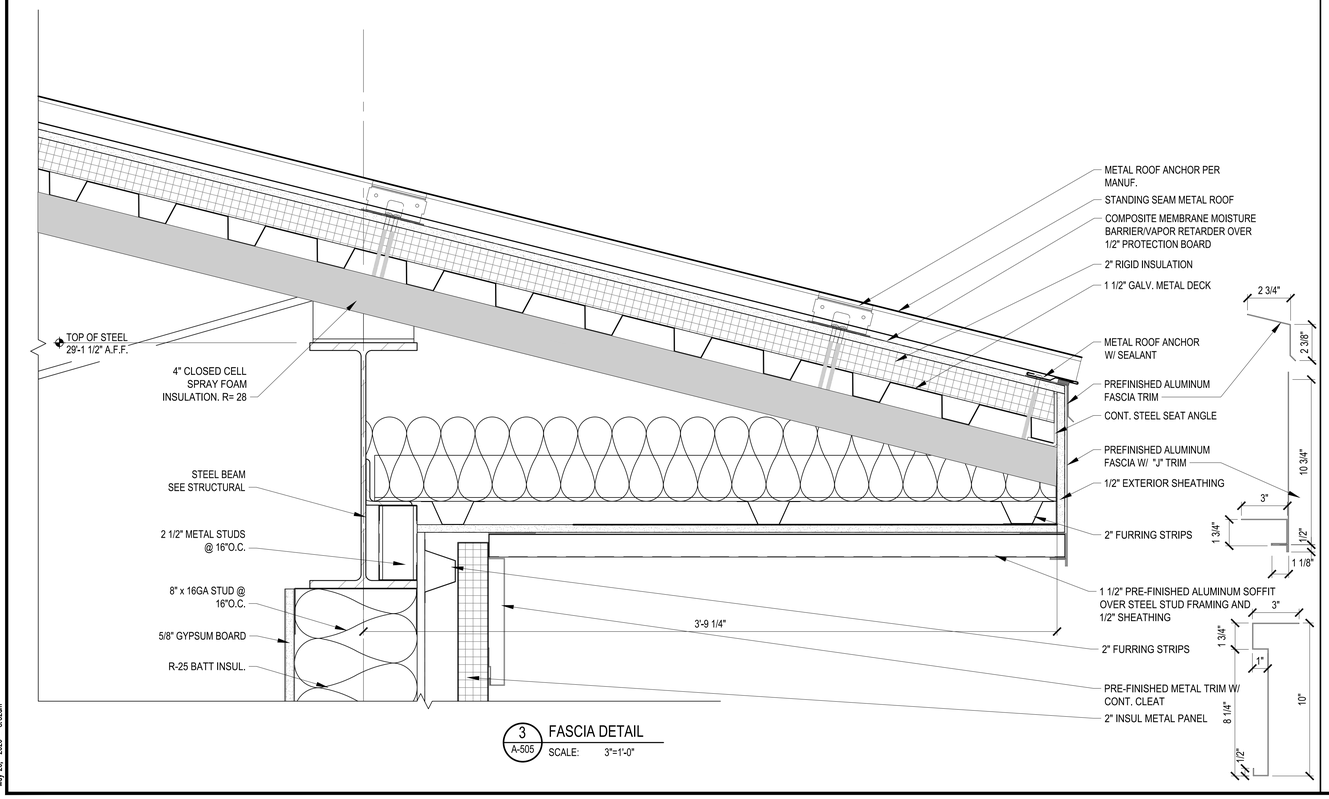

3 A-505 FASCIA DETAIL
SCALE: 3"=1'-0"

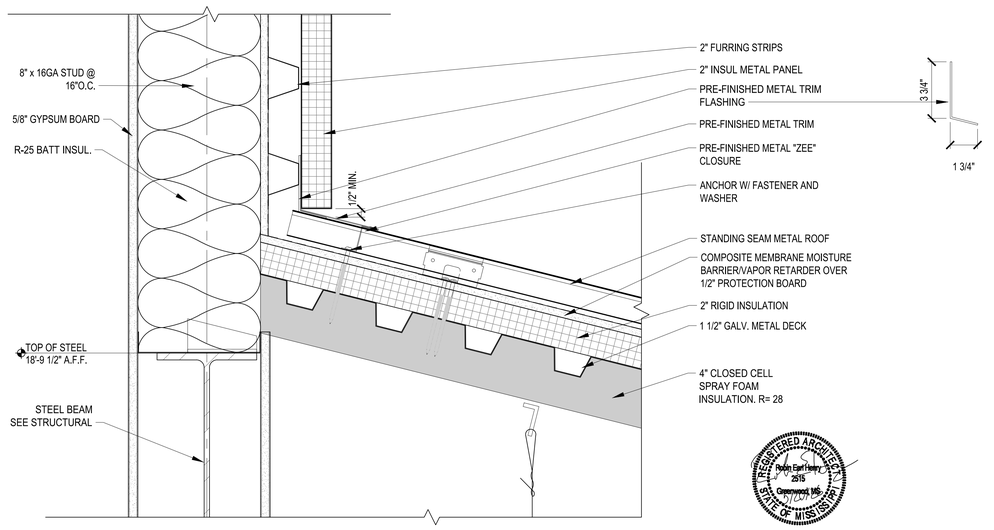

4 A-505 FASCIA DETAIL
SCALE: 3"=1'-0"

0 3" 6" 1'
SCALE: 3"=1'-0"

REGISTERED ARCHITECT Robin Earl Henry 2015 STATE OF MISSISSIPPI

NO.	DATE	BY	DESCRIPTION

REVISIONS

Johnson Mº Adams PLLC ARCHITECTURE ENGINEERING PLANNING
P.O. BOX 513, GREENWOOD, MISSISSIPPI - (662) 455-6543

A-E FIRM	USDA
PROJECT MANAGER	EPM
REH	WN
DESIGNER	PPM
JLF	XXX
CHECKED BY	SAFETY & HEALTH
DRL	CM
JOB #	REAL PROPERTY
5825	JS

USDA Agricultural Research Service

USDA AGRICULTURAL RESEARCH SERVICE
SUGARCANE RESEARCH LABORATORY
HOUMA, LOUISIANA

ROOF DETAILS

PROJECT NO. XXX	AGRICULTURAL RESEARCH SERVICE FACILITIES ENGINEERING BRANCH 5106 SUNNYSIDE AVENUE BELTSVILLE, MD 20705-5100	SHEET A-505
DATE 05/20/2026		60 OF 176

C:\Users\JMORAZ~1\Appdata\Local\Temp\AcPublish_28556\A505.dwg
May 20, 2026 - 8:32am

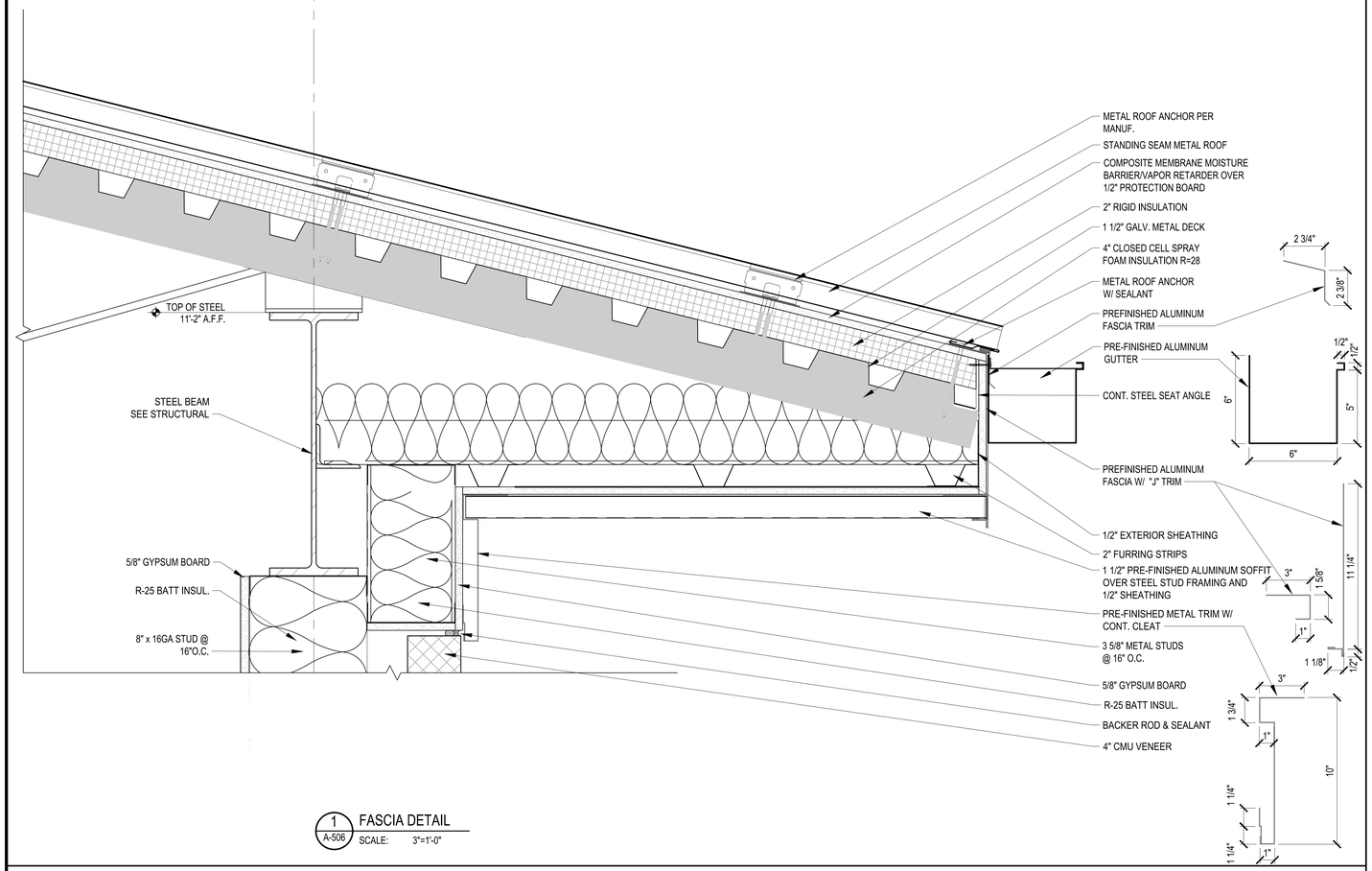

1 A-506 FASCIA DETAIL
SCALE: 3"=1'-0"

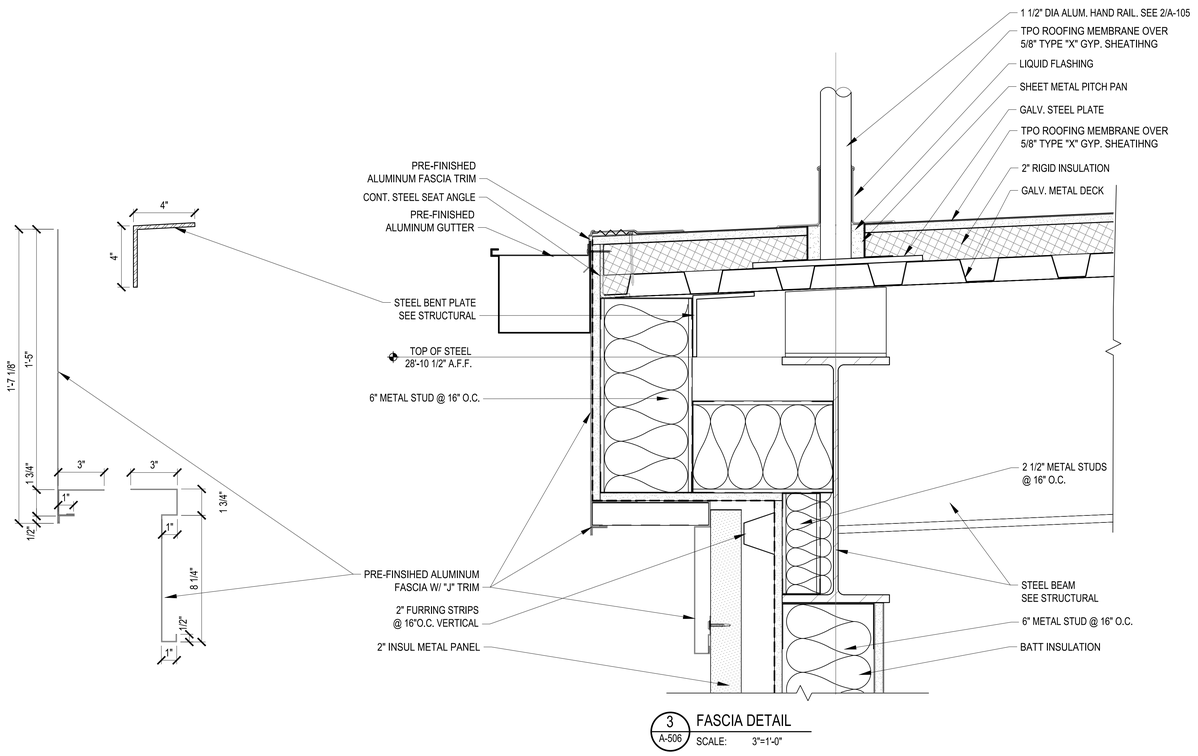

3 A-506 FASCIA DETAIL
SCALE: 3"=1'-0"

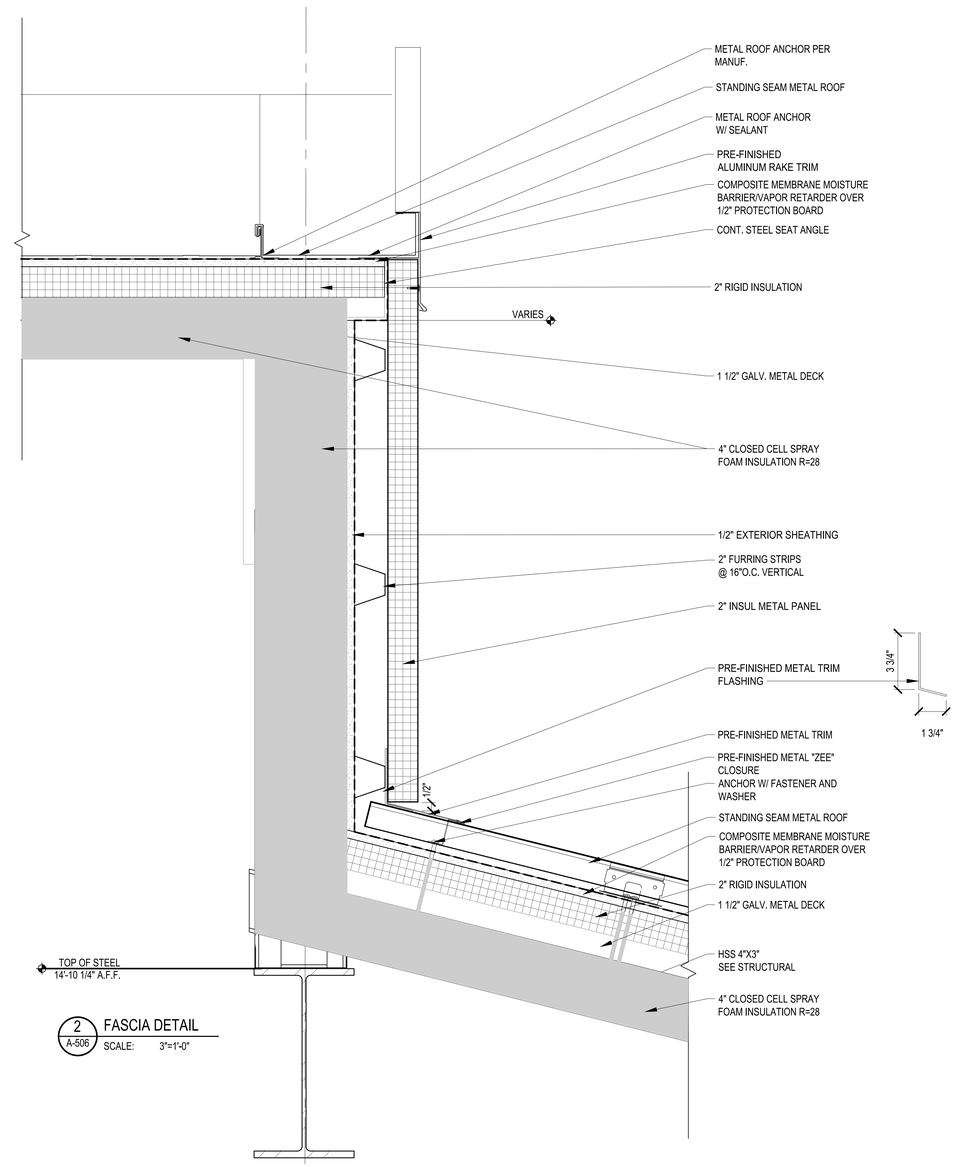

2 A-506 FASCIA DETAIL
SCALE: 3"=1'-0"

0 3" 6" 1'
SCALE: 3"=1'-0"

REGISTERED ARCHITECT Robin Earl Henry, AIA 2515 STATE OF MISSISSIPPI

NO.	DATE	BY	DESCRIPTION

REVISIONS

Johnson Mˢ Adams PLLC
ARCHITECTS/ENGINEERS PLANNERS SURVEYORS
P.O. BOX 511, GREENWOOD, MISSISSIPPI - (662) 455-6443

USDA Agricultural Research Service

USDA AGRICULTURAL RESEARCH SERVICE
SUGARCANE RESEARCH LABORATORY
HOUMA, LOUISIANA

ROOF DETAILS

A-E FIRM	USDA
PROJECT MANAGER	REH
EPM	WN
DESIGNER	JLF
PPM	XXX
CHECKED BY	DRL
SAFETY & HEALTH	CM
JOB #	5825
REAL PROPERTY	JS

PROJECT NO. XXX	AGRICULTURAL RESEARCH SERVICE FACILITIES ENGINEERING BRANCH 5106 SUNNYSIDE AVENUE BELTSVILLE, MD 20705-5100	SHEET A-506
DATE 05/20/2026		61 OF 176

C:\Users\MICHAE~1\Appdata\Local\Temp\AcPublish_28588\A506.dwg
May 20, 2026 - 8:32pm

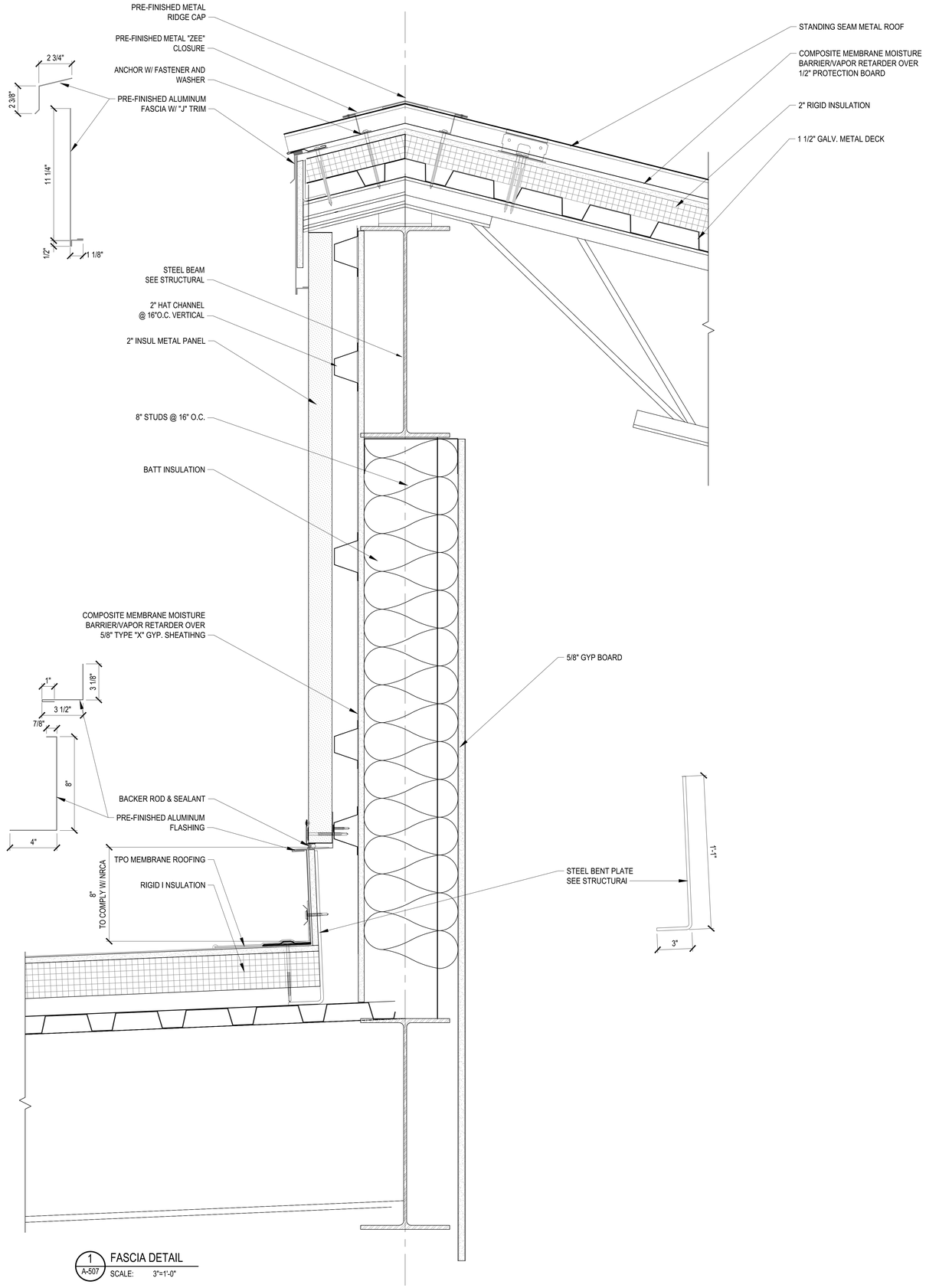

1 A-507 FASCIA DETAIL
SCALE: 3"=1'-0"

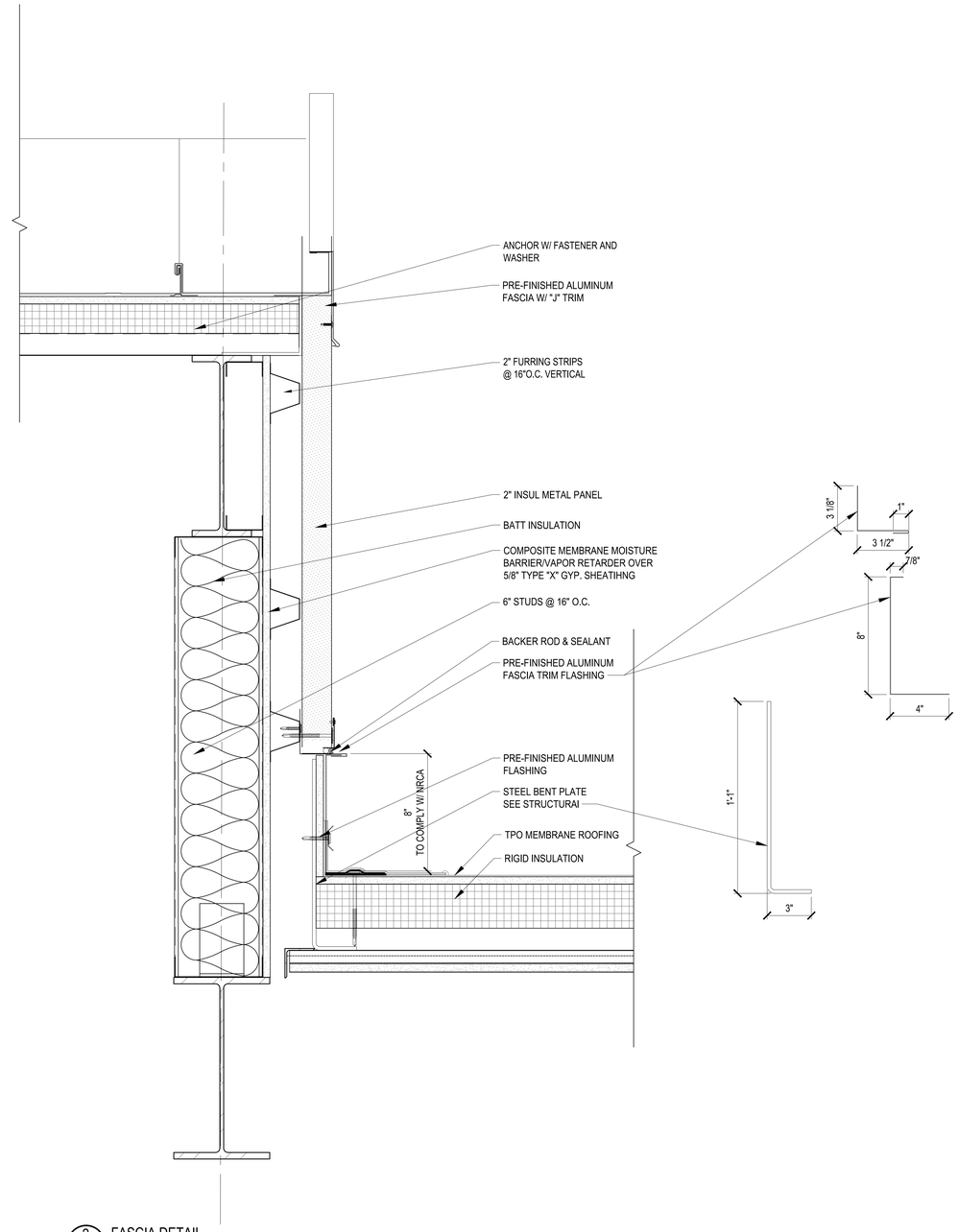

2 A-507 FASCIA DETAIL
SCALE: 3"=1'-0"

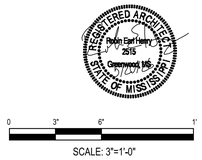

0 3" 6" 1'
SCALE: 3"=1'-0"

Johnson M'Adams
ARCHITECTS/ENGINEERS PLANNERS SURVEYING MANAGEMENT
P.O. BOX 515, GREENWOOD, MISSISSIPPI - (662) 455-6943

NO.	DATE	BY	DESCRIPTION

REVISIONS

A-E FIRM	USDA
PROJECT MANAGER REH	EPM WN
DESIGNER JLF	PPM XXX
CHECKED BY DRL	SAFETY & HEALTH CM
JOB # 5825	REAL PROPERTY JS

USDA Agricultural Research Service

USDA AGRICULTURAL RESEARCH SERVICE
SUGARCANE RESEARCH LABORATORY
HOUMA, LOUISIANA

ROOF DETAILS

PROJECT NO. XXX
DATE 05/20/2026

AGRICULTURAL RESEARCH SERVICE
FACILITIES ENGINEERING BRANCH
5106 SUNNYSIDE AVENUE
BELTSVILLE, MD 20705-5100

SHEET A-507
62 OF 176

C:\Users\MICHAE~1\AppData\Local\Temp\AcPublish_28588\A507.dwg
May 20, 2026 - 8:32am

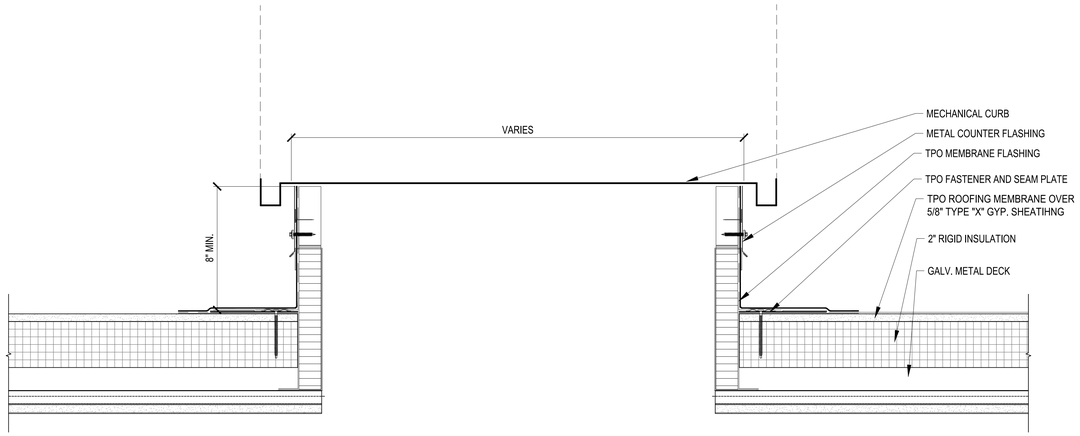

1 A-508 CURB DETAIL
SCALE: 3"=1'-0"

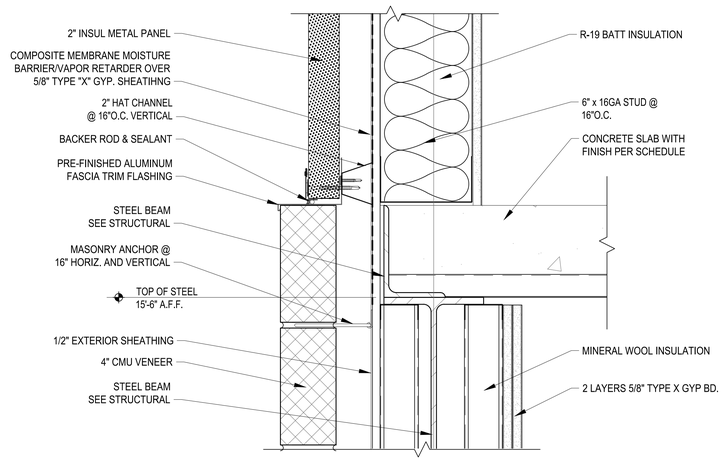

2 A-508 FLASHING DETAIL
SCALE: 3"=1'-0"

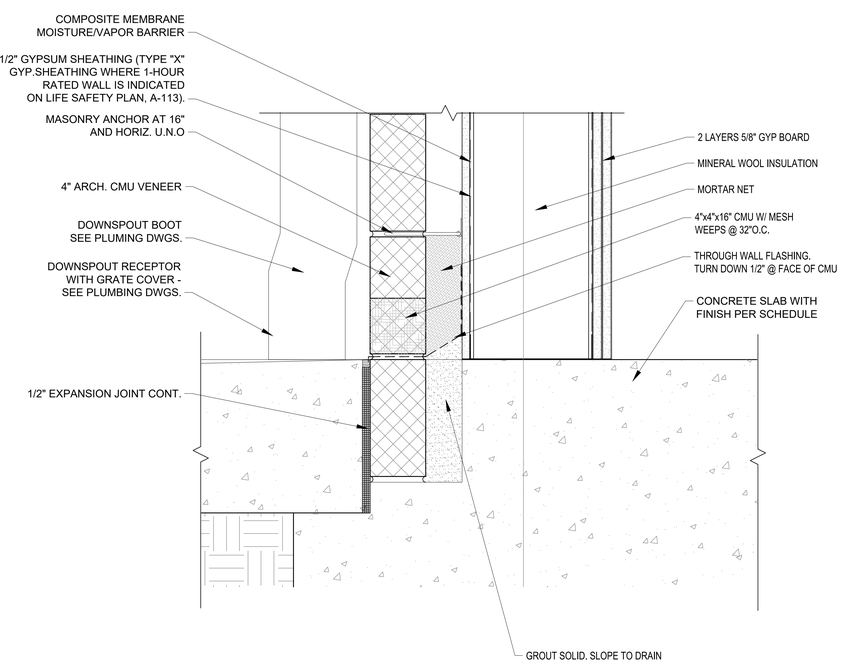

3 A-508 FASCIA DETAIL
SCALE: 3"=1'-0"

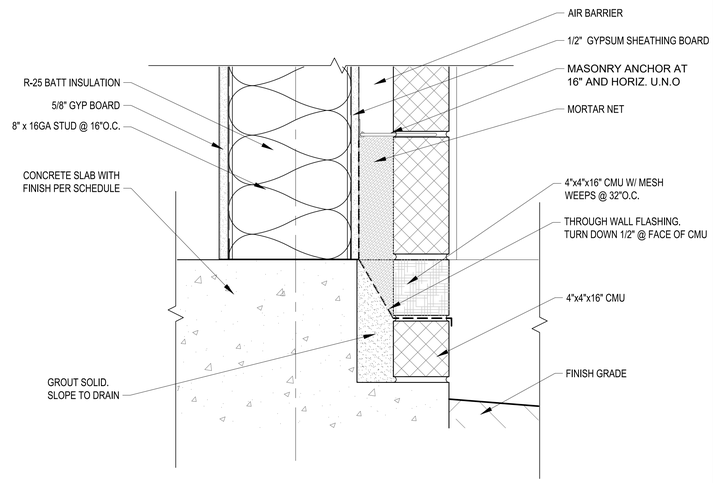

4 A-508 WALL BASE DETAIL
SCALE: 3"=1'-0"

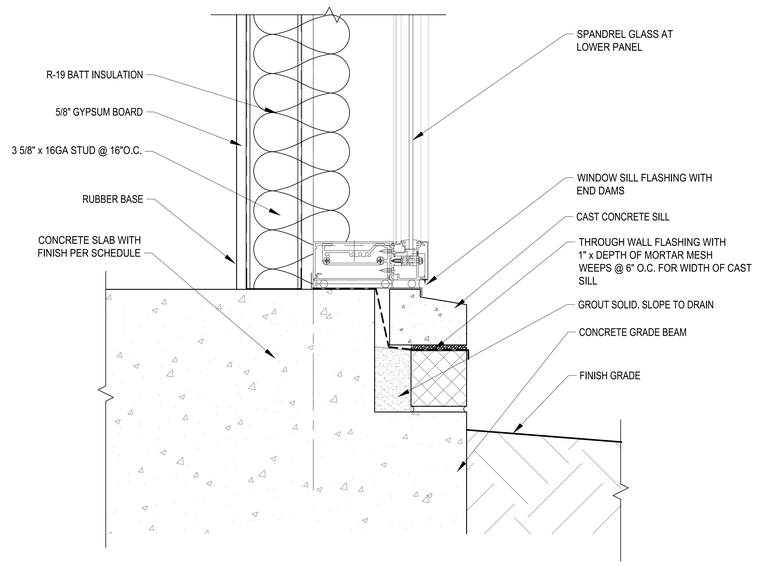

5 A-508 WALL BASE DETAIL
SCALE: 3"=1'-0"

0 3" 6" 1'
SCALE: 3"=1'-0"

Johnson McAdams
ARCHITECTS/ENGINEERS PLANNING SURVEYING ENVIRONMENT
P.O. BOX 515, GREENWOOD, MISSISSIPPI - (662) 455-6943

NO.	DATE	BY	DESCRIPTION

REVISIONS

A-E FIRM	USDA
PROJECT MANAGER REH	EPM WN
DESIGNER JLF	PPM XXX
CHECKED BY DRL	SAFETY & HEALTH CM
JOB # 5825	REAL PROPERTY JS

USDA Agricultural Research Service

USDA AGRICULTURAL RESEARCH SERVICE
SUGARCANE RESEARCH LABORATORY
HOUMA, LOUISIANA

ROOF DETAILS

PROJECT NO.	AGRICULTURAL RESEARCH SERVICE FACILITIES ENGINEERING BRANCH 5106 SUNNYSIDE AVENUE BELTSVILLE, MD 20705-5100	SHEET
XXX		A-508
DATE 05/20/2026		63 OF 176

C:\Users\MICHAE~1\AppData\Local\Temp\AcPublish_28588\A508.dwg
May 20, 2026 - 8:32am

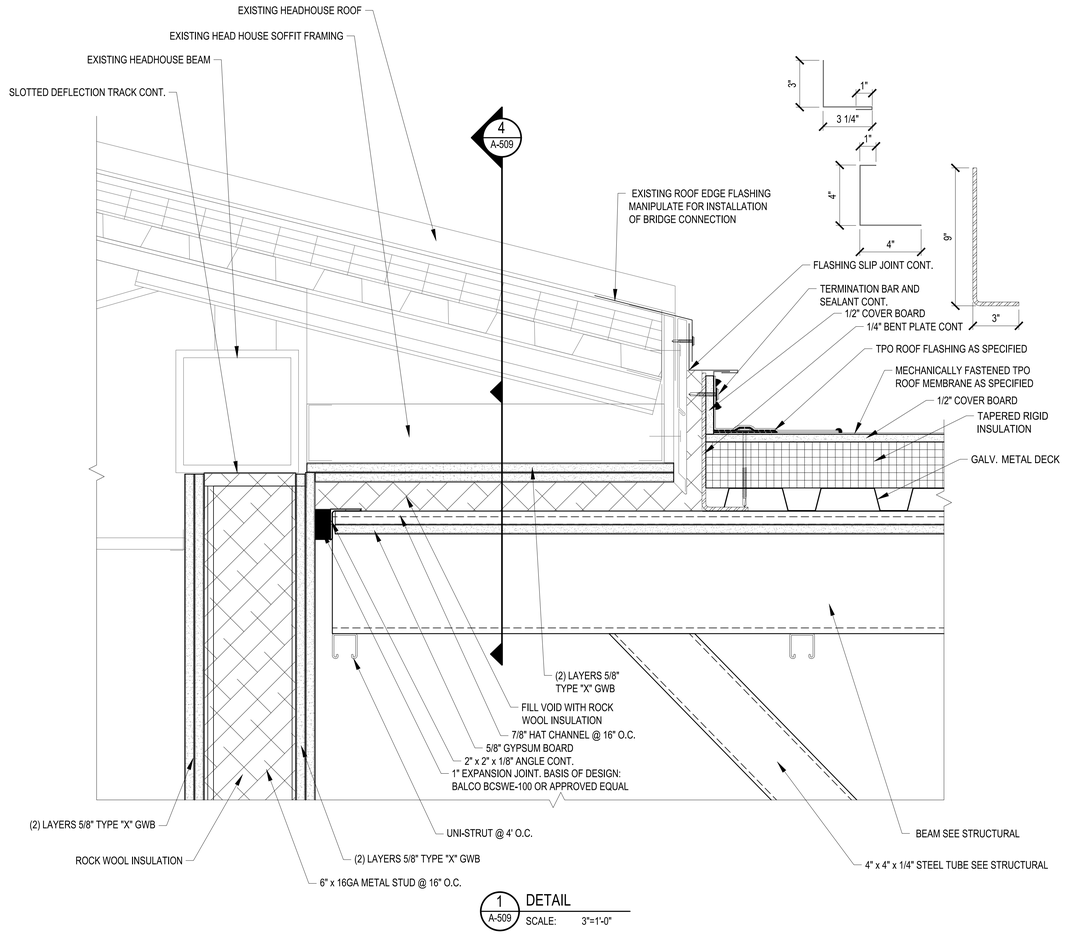

1 A-509 DETAIL
SCALE: 3"=1'-0"

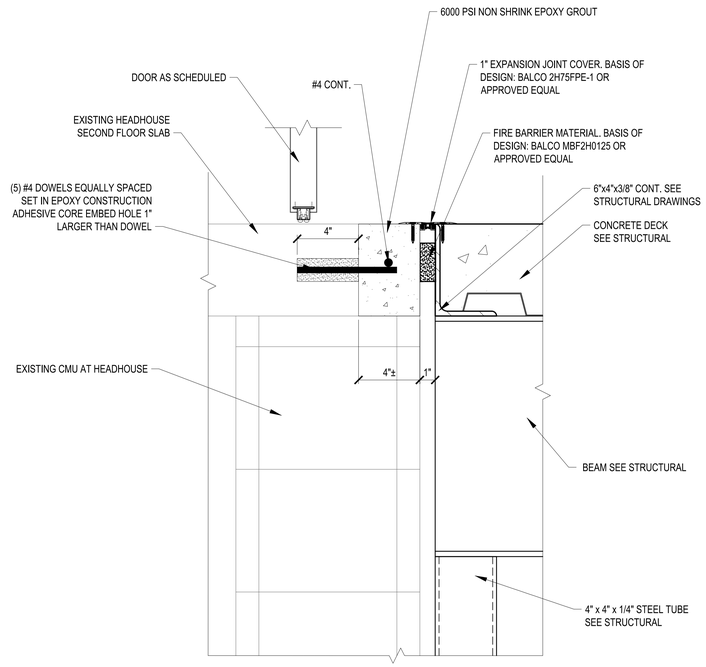

2 A-509 DETAIL
SCALE: 3"=1'-0"

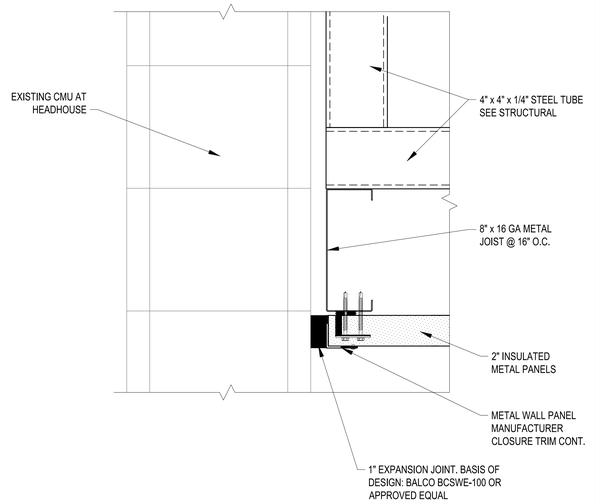

3 A-509 DETAIL
SCALE: 3"=1'-0"

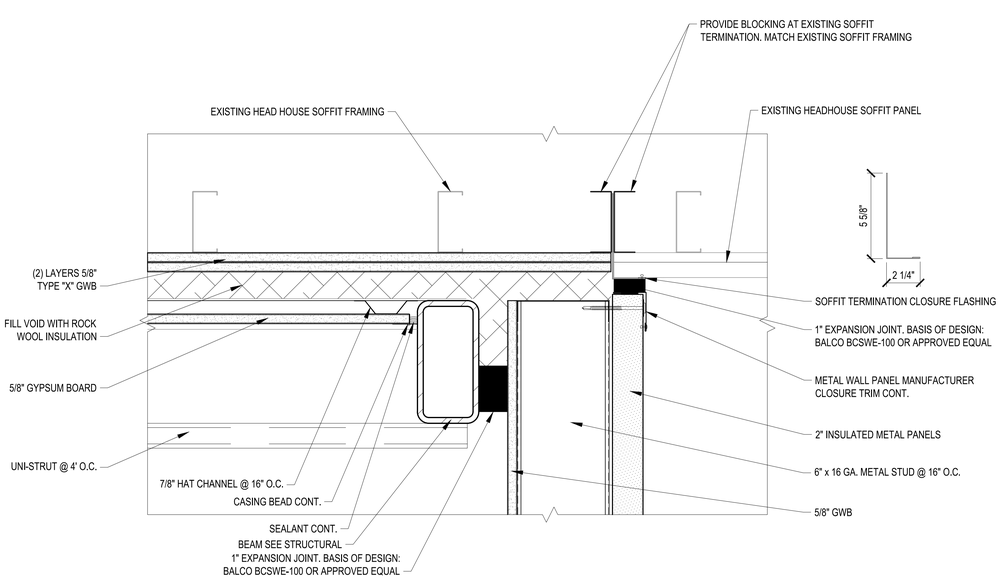

4 A-509 DETAIL
SCALE: 3"=1'-0"

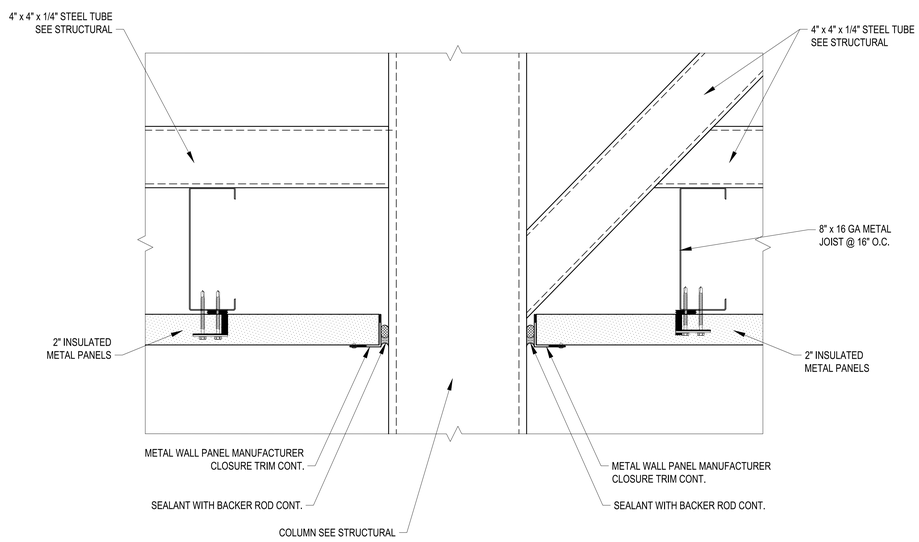

5 A-509 DETAIL
SCALE: 3"=1'-0"

0 3" 6" 1'
SCALE: 3"=1'-0"

REGISTERED ARCHITECT
Robert Earl Henry
2515
Greenwood, MS
STATE OF MISSISSIPPI

NO.	DATE	BY	DESCRIPTION

REVISIONS

Johnson, Mirmiran & Thompson, Inc.
ARCHITECTS/ENGINEERS PLANNERS SURVEYORS MANAGEMENT
P.O. BOX 613, GREENWOOD, MISSISSIPPI (662) 453-6421

USDA Agricultural Research Service

USDA AGRICULTURAL RESEARCH SERVICE
SUGARCANE RESEARCH LABORATORY
HOUMA, LOUISIANA

BRIDGE DETAILS

A-E FIRM	USDA
PROJECT MANAGER	REH
DESIGNER	JLF
CHECKED BY	DRL
JOB #	5825
EPM	WN
PPM	XXX
SAFETY & HEALTH	CM
REAL PROPERTY	JS

PROJECT NO.	XXX
DATE	05/20/2026

AGRICULTURAL RESEARCH SERVICE
FACILITIES ENGINEERING BRANCH
5106 SUNNYSIDE AVENUE
BELTSVILLE, MD 20705-5100

SHEET A-509
64 OF 176

C:\Users\MROWE~1\AppData\Local\Temp\AcPublish_28588\A509.dwg
May 20, 2026 - 8:32am

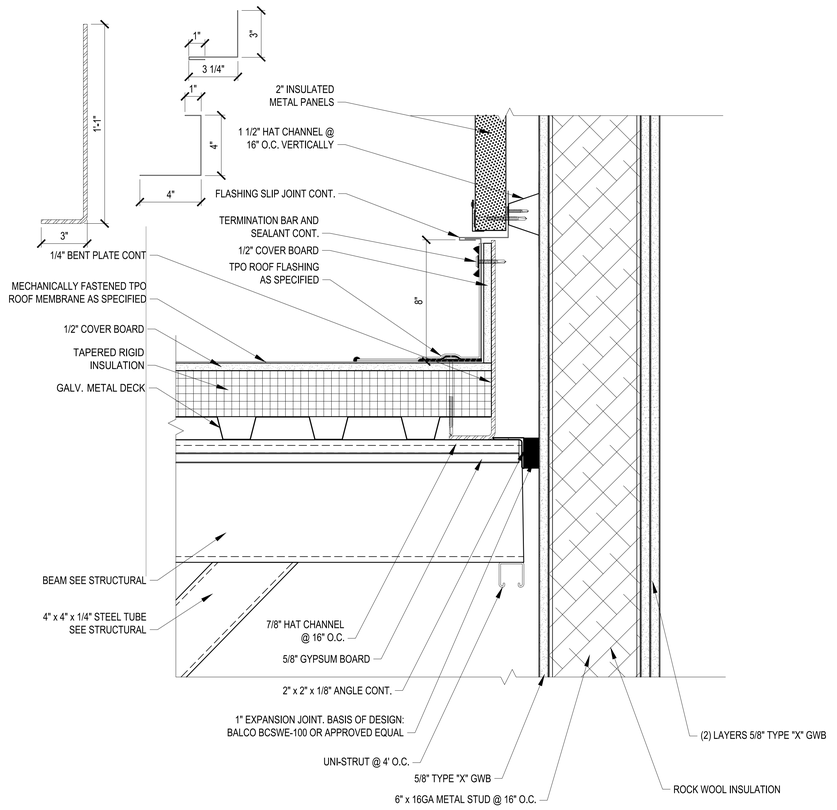

1 A-510 DETAIL
SCALE: 3"=1'-0"

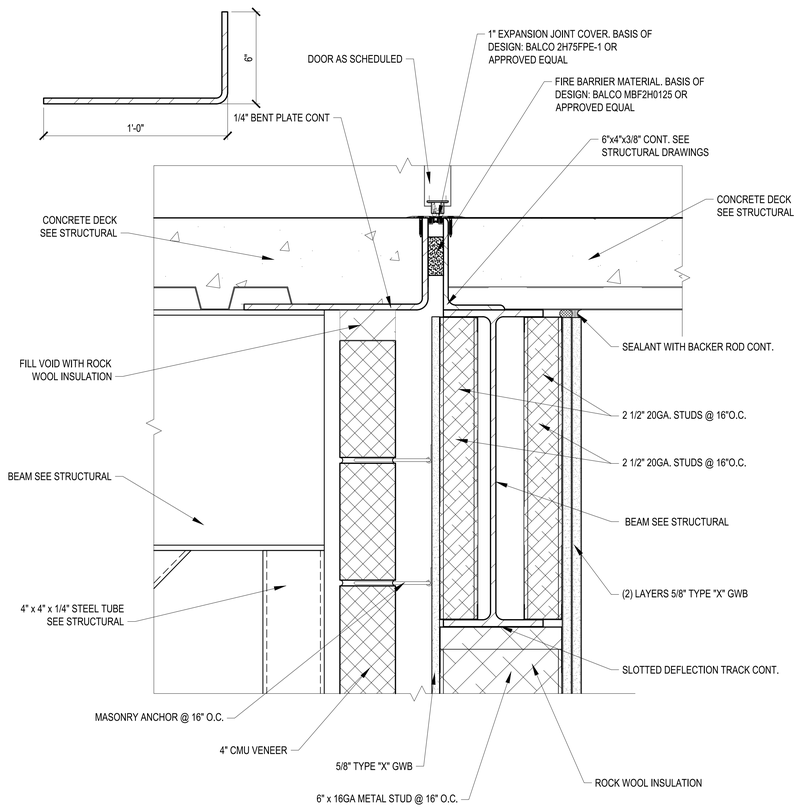

2 A-510 DETAIL
SCALE: 3"=1'-0"

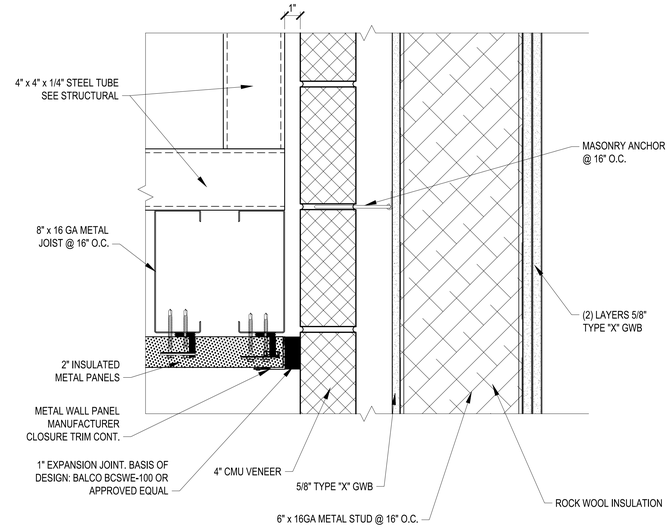

3 A-510 DETAIL
SCALE: 3"=1'-0"

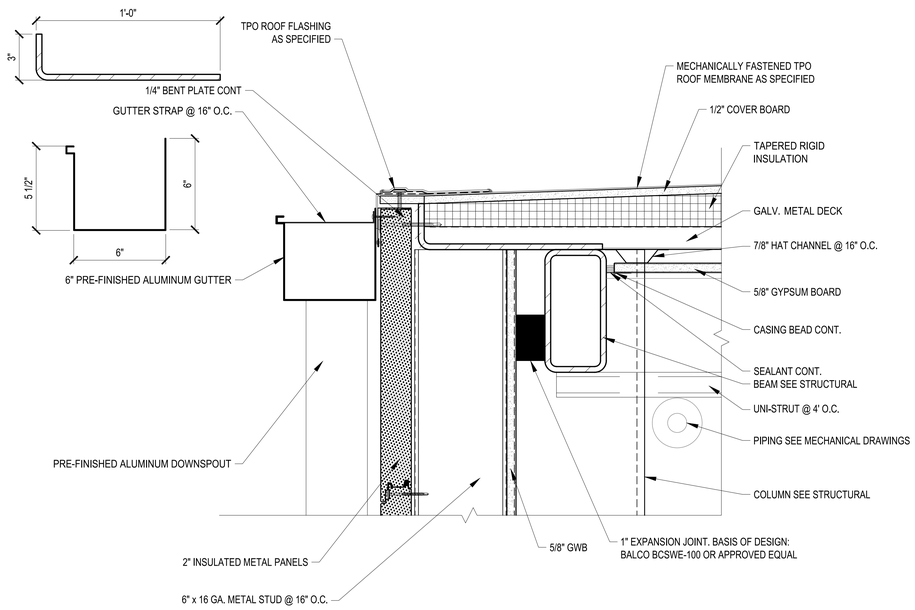

4 A-510 DETAIL
SCALE: 3"=1'-0"

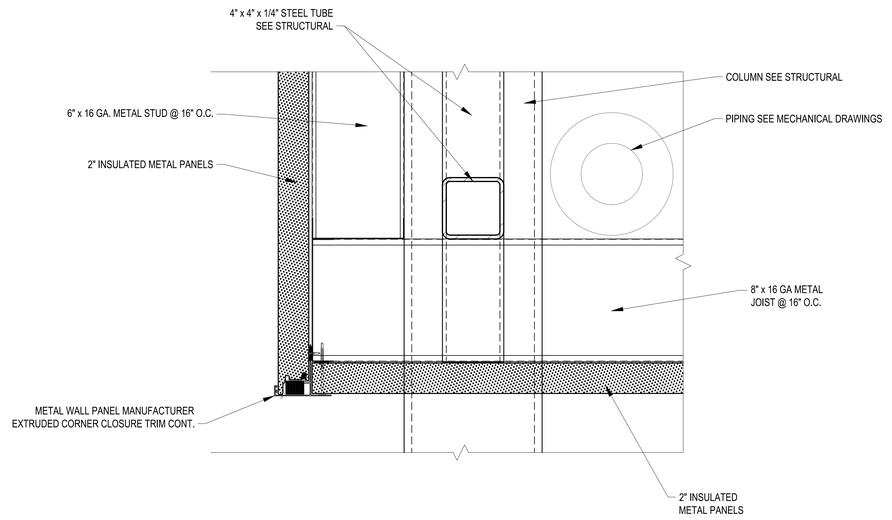

5 A-510 DETAIL
SCALE: 3"=1'-0"

0 3" 6" 1'
SCALE: 3"=1'-0"

NO.	DATE	BY	DESCRIPTION

REVISIONS

Johnson, Mirmiran & Thompson, Inc.
PROFESSIONAL ENGINEERS PLANNING SURVEYING MANAGEMENT
P.O. BOX 5-5, GREENWOOD, MISSISSIPPI (662) 455-6443

USDA Agricultural Research Service

USDA AGRICULTURAL RESEARCH SERVICE
SUGARCANE RESEARCH LABORATORY
HOUMA, LOUISIANA

BRIDGE DETAILS

A-E FIRM	USDA
PROJECT MANAGER: REH	EPM: WN
DESIGNER: JLF	PPM: XXX
CHECKED BY: DRL	SAFETY & HEALTH: CM
JOB #: 5825	REAL PROPERTY: JS

PROJECT NO. XXX
DATE 05/20/2026

AGRICULTURAL RESEARCH SERVICE
FACILITIES ENGINEERING BRANCH
5106 SUNNYSIDE AVENUE
BELTSVILLE, MD 20705-5100

SHEET A-510
65 OF 176

REGISTERED ARCHITECT
Robin Earl Henry
2515
Greenwood, MS
STATE OF MISSISSIPPI

C:\Users\MICHAE~1\AppData\Local\Temp\AcPublish_28588\A510.dwg
May 20, 2026 - 2:03pm

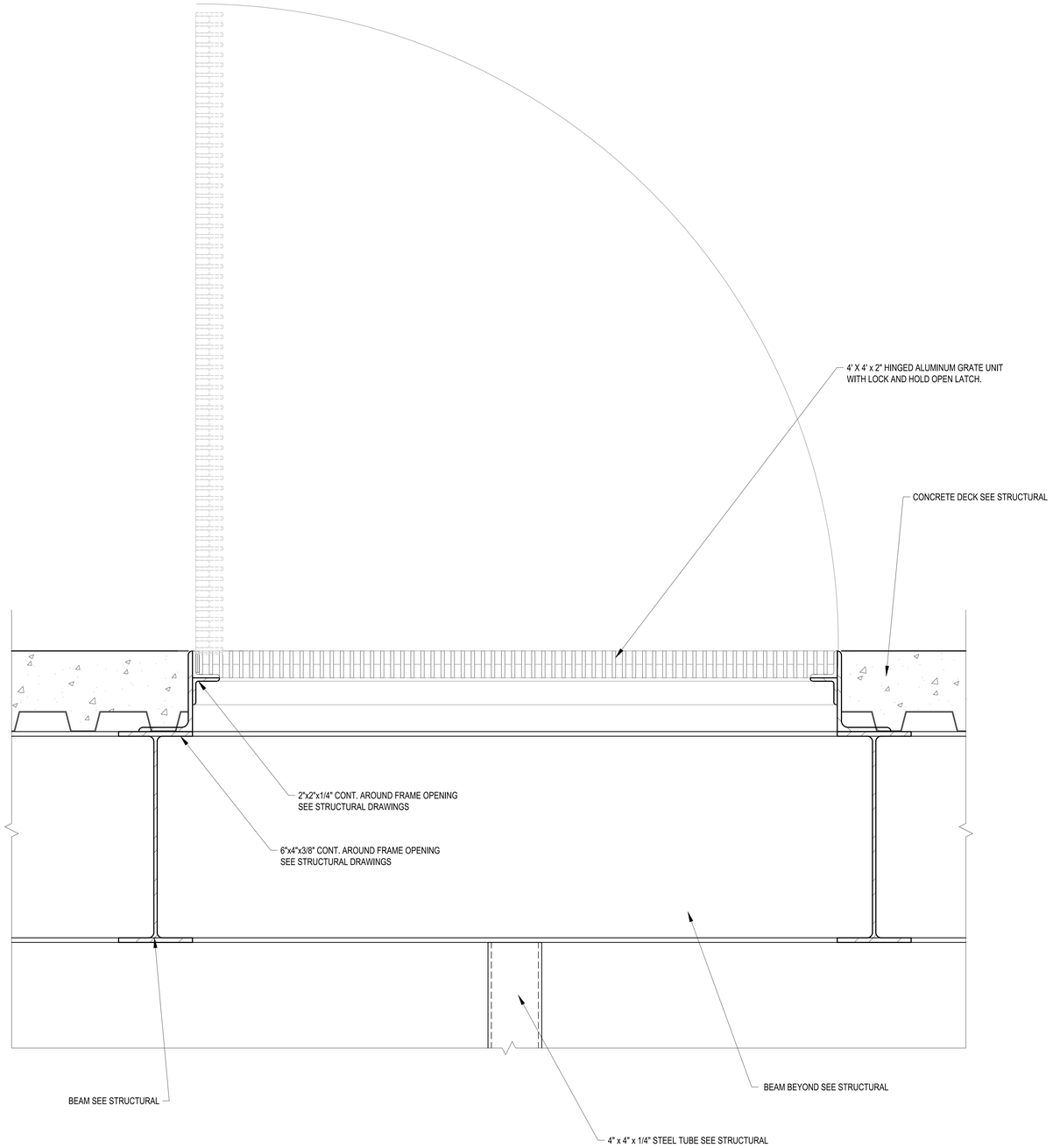

1 A-511 DETAIL
SCALE: 3"=1'-0"

0 3" 6" 1'
SCALE: 3"=1'-0"

C:\Users\MICHAEL~1\AppData\Local\Temp\AcPublish_28588\A511.dwg
May 20, 2026 - 8:32am

Johnson M'Adams
PROFESSIONAL ENGINEERS PLANNERS SURVEYING ENVIRONMENT
P.O. BOX 515, GREENWOOD, MISSISSIPPI - 38602-655-6943

NO.	DATE	BY	DESCRIPTION

REVISIONS

A-E FIRM	USDA
PROJECT MANAGER REH	EPM WN
DESIGNER JLF	PPM XXX
CHECKED BY DRL	SAFETY & HEALTH CM
JOB # 5825	REAL PROPERTY JS

USDA Agricultural Research Service

USDA AGRICULTURAL RESEARCH SERVICE
SUGARCANE RESEARCH LABORATORY
HOUMA, LOUISIANA

BRIDGE DETAILS

PROJECT NO. XXX
DATE 05/20/2026

AGRICULTURAL RESEARCH SERVICE
FACILITIES ENGINEERING BRANCH
5106 SUNNYSIDE AVENUE
BELTSVILLE, MD 20705-5100

SHEET A-511
66 OF 176

REGISTERED ARCHITECT
Robin Earl Henry
2515
Greenwood, MS
STATE OF MISSISSIPPI

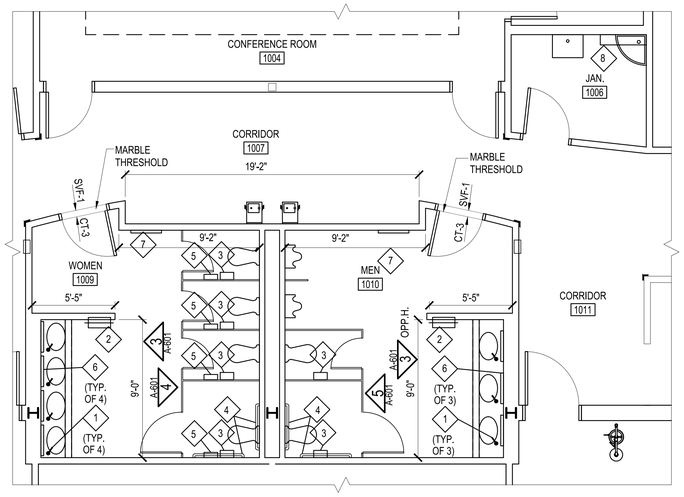

1 A-601 ENLARGED PLAN
SCALE: 1/4"=1'-0"

PLAN NORTH

TRUE NORTH

2 A-601 ENLARGED PLAN
SCALE: 1/4"=1'-0"

PLAN NORTH

TRUE NORTH

TOILET ACCESSORY SCHEDULE

SPEC. ID	MARK	MFGR. NO.	DESCRIPTION	MOUNTING HEIGHT*	UNIT HEIGHT	UNIT WIDTH	UNIT DEPTH	WALL RECESS
SD	1	B-8226	LAVATORY MOUNTED SOAP DISPENSER W/6" SPOUT, 1.0-L CAPACITY	LAV MTD	N/A	N/A	N/A	N/A
PTDWR	2	B-3942	PAPER TOWEL DISPENSER AND WASTE RECEPTACLE	60"	56 1/4"	17 1/2"	8"	4"
TTD	3	B-2890	JUMBO - ROLL TOILET TISSUE DISPENSER	29 1/2"	10 5/8"	10 1/2"	4 1/2"	N/A
GB1	4	B-6806X36	1 1/2" DIA. GRAB BAR, W/PEENED GRIP, POL. ENDS	33"	3"	36"	3"	N/A
GB2	4	B-6806X42	1 1/2" DIA. GRAB BAR, W/PEENED GRIP, POL. ENDS	33"	3"	42"	3"	N/A
SND	5	B-270	SURFACE MOUNTED SANITARY NAPKIN DISPOSAL	30"	10"	7 1/2"	3 3/4"	N/A
MG1	6	B-1652436	MIRROR	75"	36"	24"	1/2"	N/A
MG2	7	B-1652460	WARDROBE MIRROR	70"	60"	24"	1/2"	N/A
US	8	B-224X36	8" UTILITY SHELF W/4 MOP + BROOM HOLDERS, RAG HOOKS	60"	N/A	36"	8"	N/A

MFGR. NO. ABOVE (B-BOBRICK WASHROOM EQUIPMENT, INC.) PROVIDED FOR REFERENCE PURPOSES ONLY. SEE SPECIFICATIONS. DIMENSIONS ABOVE ARE APPROXIMATE. ITEMS SHALL BE IN COMPLIANCE WITH ANSI A117.1.
*MOUNTING HEIGHT SHALL BE TO TOP OF UNIT, UNLESS NOTED OTHERWISE.
**MOUNTING HEIGHT SHALL BE TO TOP OF FOLDED-DOWN SEAT

LEGEND

◇ TOILET ACCESSORY, SEE SCHEDULE ON THIS SHEET.

GENERAL NOTES

1. PROVIDE NON-COMBUSTIBLE BLOCKING IN WALLS TO SUPPORT TOILET ACCESSORIES, SEE 14/A-601.

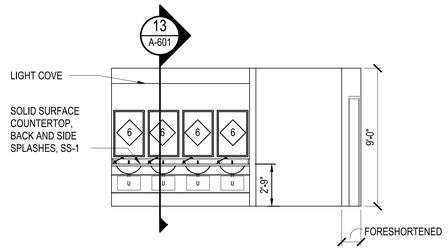

3 A-601 INTERIOR ELEVATION
SCALE: 1/4"=1'-0"

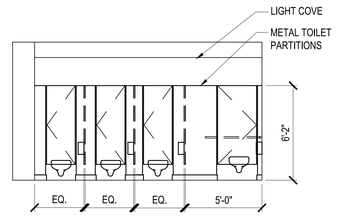

4 A-601 INTERIOR ELEVATION
SCALE: 1/4"=1'-0"

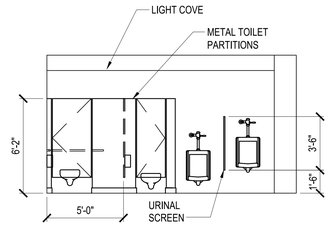

5 A-601 INTERIOR ELEVATION
SCALE: 1/4"=1'-0"

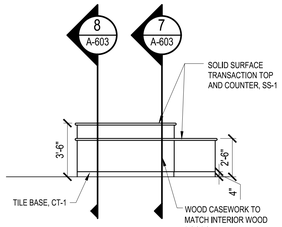

6 A-601 INTERIOR ELEVATION
SCALE: 1/4"=1'-0"

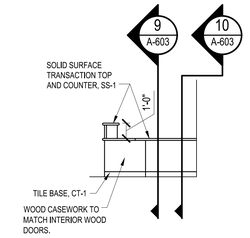

7 A-601 INTERIOR ELEVATION
SCALE: 1/4"=1'-0"

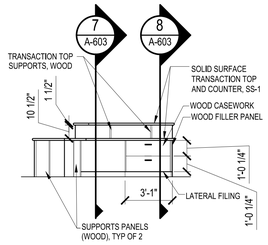

8 A-601 INTERIOR ELEVATION
SCALE: 1/4"=1'-0"

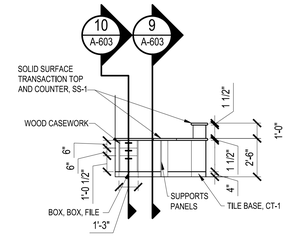

9 A-601 INTERIOR ELEVATION
SCALE: 1/4"=1'-0"

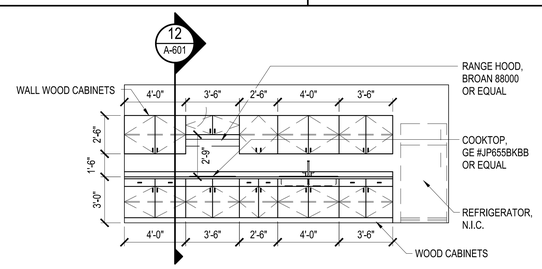

10 A-601 INTERIOR ELEVATION
SCALE: 1/4"=1'-0"

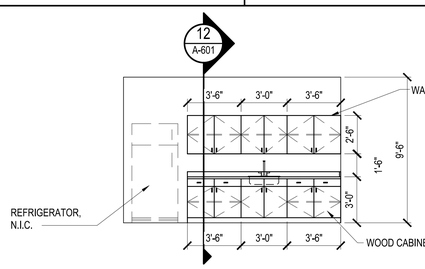

11 A-601 INTERIOR ELEVATION
SCALE: 1/4"=1'-0"

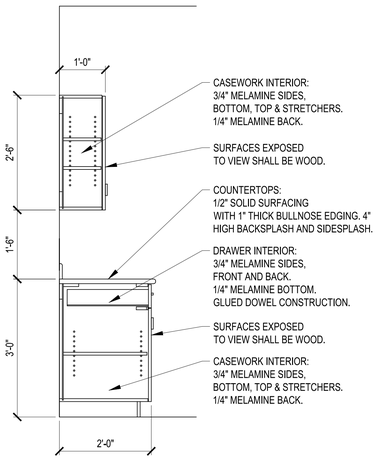

12 A-601 CASEWORK SECTION
SCALE: 3/4"=1'-0"

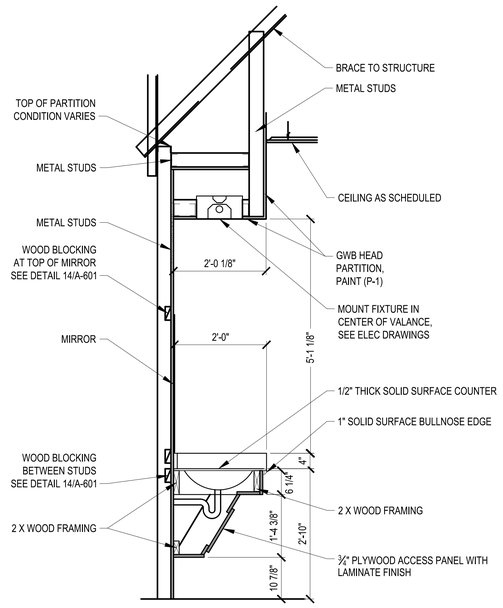

13 A-601 CASEWORK SECTION
SCALE: 3/4"=1'-0"

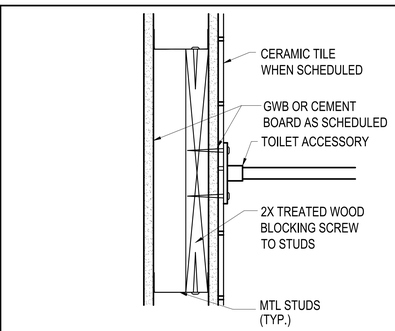

14 A-601 BLOCKING PLAN DETAIL
SCALE: 3"=1'-0"

0 3" 6" 1'
SCALE: 3"=1'-0"

0 2' 4' 8' 12'
SCALE: 1/4"= 1'-0"

0 1' 2' 4'
SCALE: 3/4"=1'-0"

REGISTERED ARCHITECT
Robin Earl Henry
2515
Greenwood, MS
STATE OF MISSISSIPPI

NO.	DATE	BY	DESCRIPTION

REVISIONS

Johnson, Mirmiran & Adams, PLLC
ARCHITECTURE/INTERIORS PLANNING SURVEYING TECHNOLOGY
P.O. BOX 513, GREENWOOD, MISSISSIPPI (662) 455-4442

A-E FIRM	USDA
PROJECT MANAGER	REH
EPM	WN
DESIGNER	JLF
PPM	XXX
CHECKED BY	DRL
SAFETY & HEALTH	CM
JOB #	5825
REAL PROPERTY	JS

USDA Agricultural Research Service

USDA AGRICULTURAL RESEARCH SERVICE
SUGARCANE RESEARCH LABORATORY
HOUMA, LOUISIANA

ENLARGED PLANS AND INTERIOR ELEVATIONS

PROJECT NO.	AGRICULTURAL RESEARCH SERVICE FACILITIES ENGINEERING BRANCH 5106 SUNNYSIDE AVENUE BELTSVILLE, MD 20705-5100	SHEET
XXX		A-601
DATE 05/20/2026		67 OF 176

C:\Users\MROSE~1\AppData\Local\Temp\AcPublish_20556\A601.dwg
May 20, 2026 - 8:32am

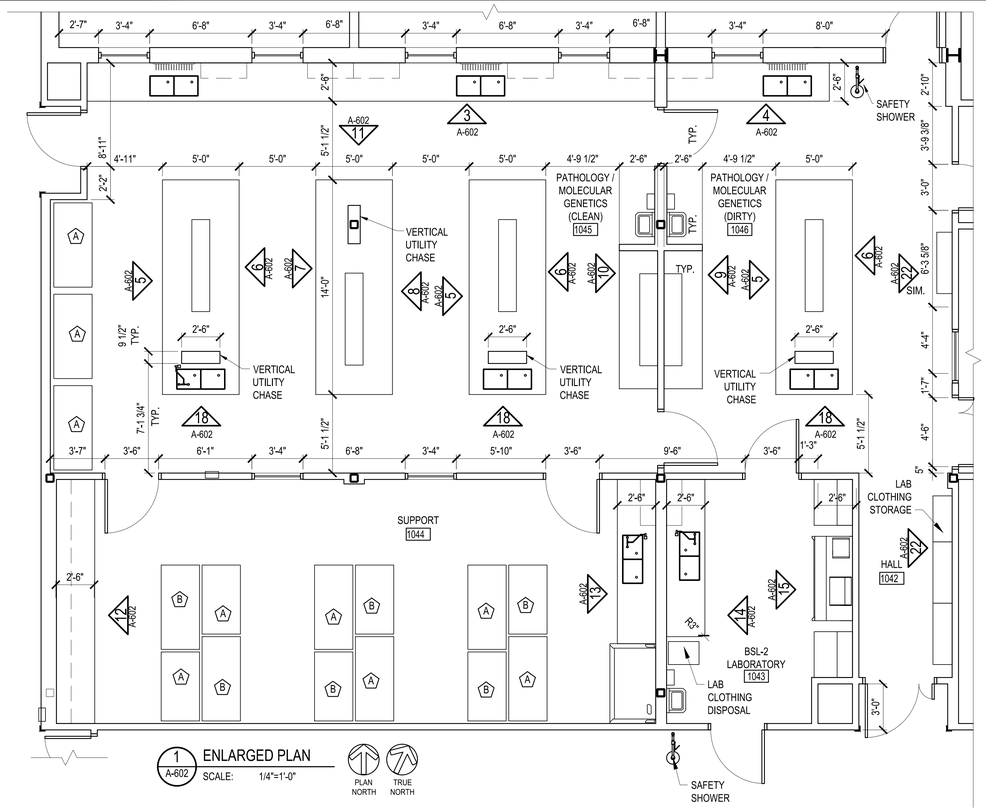

1 A-602 ENLARGED PLAN
SCALE: 1/4"=1'-0"
PLAN NORTH
TRUE NORTH

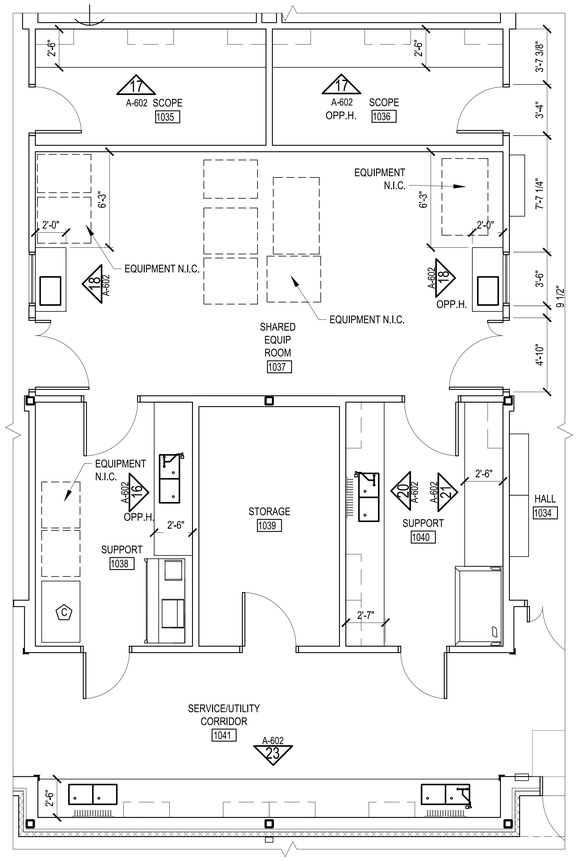

2 A-602 ENLARGED PLAN
SCALE: 1/4"=1'-0"
PLAN NORTH
TRUE NORTH

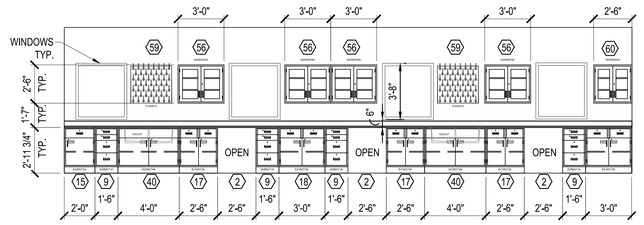

3 A-602 INTERIOR ELEVATION
SCALE: 1/4"=1'-0"

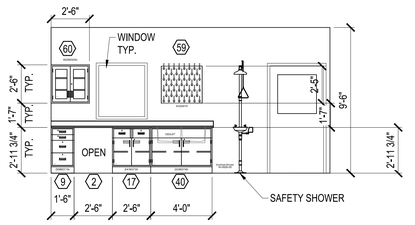

4 A-602 INTERIOR ELEVATION
SCALE: 1/4"=1'-0"

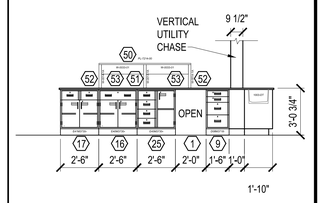

5 A-602 INTERIOR ELEVATION
SCALE: 1/4"=1'-0"

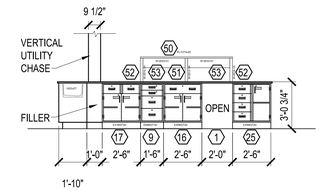

6 A-602 INTERIOR ELEVATION
SCALE: 1/4"=1'-0"

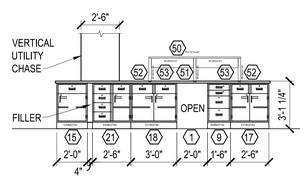

7 A-602 INTERIOR ELEVATION
SCALE: 1/4"=1'-0"

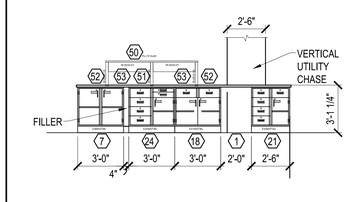

8 A-602 INTERIOR ELEVATION
SCALE: 1/4"=1'-0"

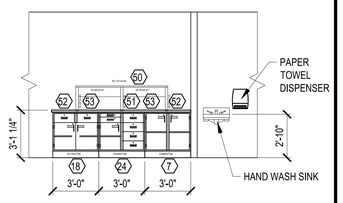

9 A-602 INTERIOR ELEVATION
SCALE: 1/4"=1'-0"

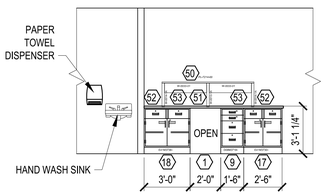

10 A-602 INTERIOR ELEVATION
SCALE: 1/4"=1'-0"

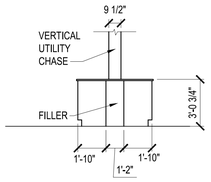

11 A-602 INTERIOR ELEVATION
SCALE: 1/4"=1'-0"

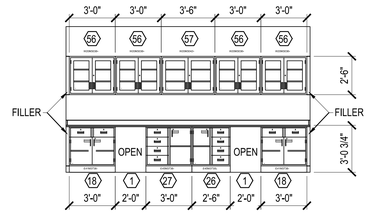

12 A-602 INTERIOR ELEVATION
SCALE: 1/4"=1'-0"

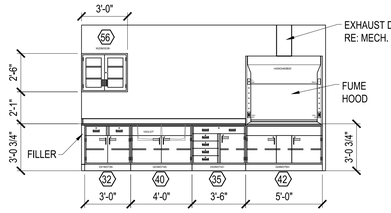

13 A-602 INTERIOR ELEVATION
SCALE: 1/4"=1'-0"

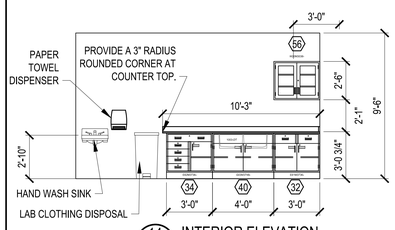

14 A-602 INTERIOR ELEVATION
SCALE: 1/4"=1'-0"

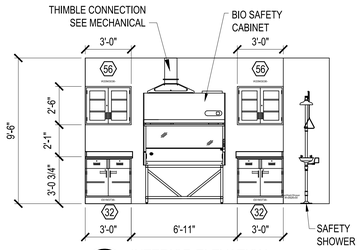

15 A-602 INTERIOR ELEVATION
SCALE: 1/4"=1'-0"

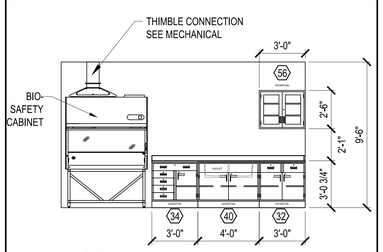

16 A-602 INTERIOR ELEVATION
SCALE: 1/4"=1'-0"

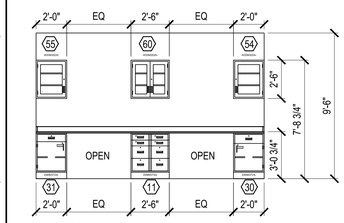

17 A-602 INTERIOR ELEVATION
SCALE: 1/4"=1'-0"

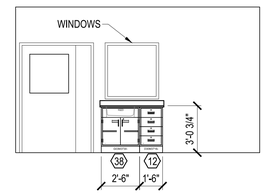

18 A-602 INTERIOR ELEVATION
SCALE: 1/4"=1'-0"

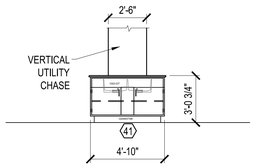

19 A-602 INTERIOR ELEVATION
SCALE: 1/4"=1'-0"

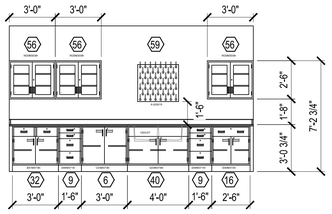

20 A-602 INTERIOR ELEVATION
SCALE: 1/4"=1'-0"

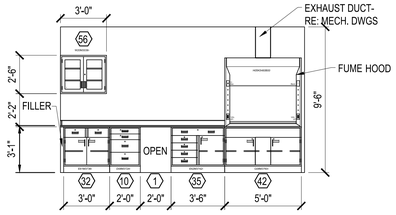

21 A-602 INTERIOR ELEVATION
SCALE: 1/4"=1'-0"

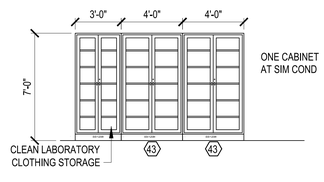

22 A-602 INTERIOR ELEVATION
SCALE: 1/4"=1'-0"

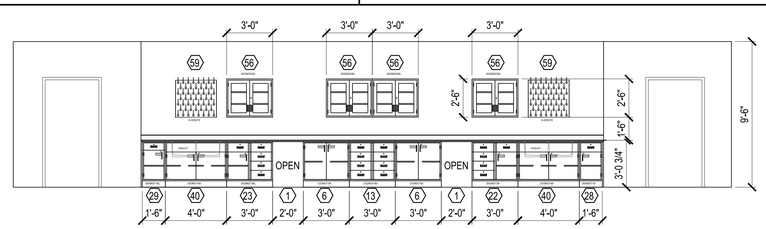

23 A-602 INTERIOR ELEVATION
SCALE: 1/4"=1'-0"

NOTES

1. CASEWORK SHALL BE METAL LAB CASEWORK
2. COUNTERTOPS SHALL BE EPOXY RESIN COUNTERTOPS.

LEGEND

- (A) 30" x 66" WORK TABLE, SEE 4/A-603
- (B) 30" x 54" WORK TABLE, SEE 4/A-603
- (C) 30" x 48" WORK TABLE, SEE 5/A-603
- (X) REFER TO LAB CASEWORK SCHEDULE, SHEET A-603

REGISTERED ARCHITECT — Robin Earl Henry — 2515 — Greenwood, MS — STATE OF MISSISSIPPI

0 2' 4' 8' 12'
SCALE: 1/4"= 1'-0"

jms Johnson McAdams PLLC
PROFESSIONAL ENGINEERING PLANNING SURVEYING
P.O. BOX 913, GREENWOOD, MISSISSIPPI (662) 455-4943

NO.	DATE	BY	DESCRIPTION
			REVISIONS

A-E FIRM	USDA
PROJECT MANAGER REH	EPM WN
DESIGNER JLF	PPM XXX
CHECKED BY DRL	SAFETY & HEALTH CM
JOB # 5825	REAL PROPERTY JS

USDA Agricultural Research Service

USDA AGRICULTURAL RESEARCH SERVICE
SUGARCANE RESEARCH LABORATORY
HOUMA, LOUISIANA

ENLARGED PLANS AND INTERIOR ELEVATIONS

PROJECT NO.	AGRICULTURAL RESEARCH SERVICE FACILITIES ENGINEERING BRANCH 5106 SUNNYSIDE AVENUE BELTSVILLE, MD 20705-5100	SHEET
XXX		A-602
DATE 05/20/2026		68 OF 176

C:\Users\MROHE~1\AppData\Local\Temp\AcPublish_28588\A602.dwg
May 20, 2026 - 8:52am

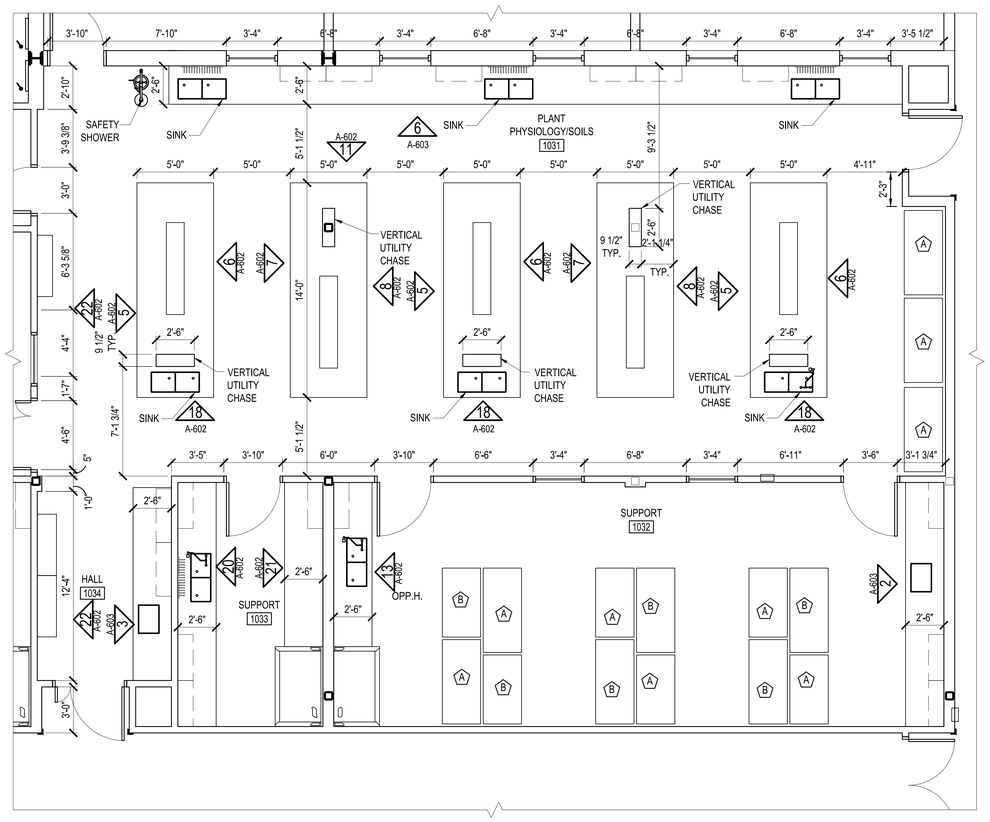

1 A-603 ENLARGED PLAN
SCALE: 1/4"=1'-0"

PLAN NORTH

TRUE NORTH

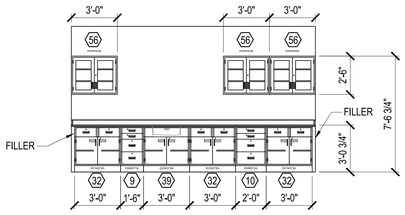

2 A-603 INTERIOR ELEVATION
SCALE: 1/4"=1'-0"

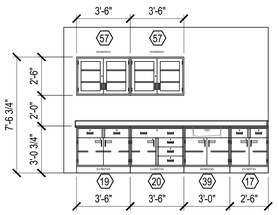

3 A-603 INTERIOR ELEVATION
SCALE: 1/4"=1'-0"

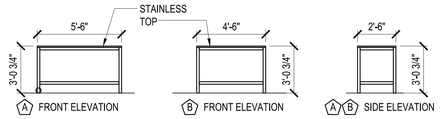

4 A-603 INTERIOR ELEVATION
SCALE: 1/4"=1'-0"

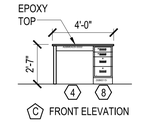

5 A-603 INTERIOR ELEVATION
SCALE: 1/4"=1'-0"

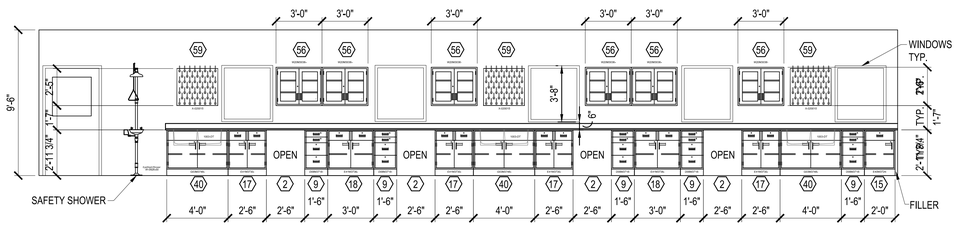

6 A-603 INTERIOR ELEVATION
SCALE: 1/4"=1'-0"

NOTES

1. CASEWORK SHALL BE METAL LAB CASEWORK
2. COUNTERTOPS SHALL BE EPOXY RESIN COUNTERTOPS.

LEGEND

- (A) 30" x 66" WORK TABLE, SEE 4/A-603
- (B) 30" x 54" WORK TABLE, SEE 4/A-603
- (C) 30" x 48" WORK TABLE, SEE 5/A-603
- (X) REFER TO LAB CASEWORK SCHEDULE THIS SHEET.

LAB CASEWORK SCHEDULE

UPPER CABINETS

MARK	MODEL NUMBER*
50	PL-7214-00
51	W-0013-1A
52	W-0014-1A
53	W-0033-01
54	W20M3024
55	W20M3024L
56	W20M3036
57	W20M3042
58	W50M2436-0000
59	X-020015
60	W20M3030

BASE CABINETS

MARK	MODEL NUMBER*
1	A01M2224
2	A01M2230
3	NOT USED
4	A06M0429-0000
5	NOT USED
6	C03M3736
7	C06M3736
8	D08M3115
9	D08M3718
10	D08M3724
11	D09M3730
12	D30M3718
13	D32M3736
14	NOT USED
15	E40M3724
16	E40M3730
17	E41M3730
18	E41M3736
19	E41M3742
20	E42M3742
21	E43M3730
22	E43M3736
23	E43M3736L
24	E44M3736
25	E45M3730
26	E45M3730L
27	E45M3736
28	E60M3718
29	E60M3718L
30	E60M3724
31	E60M3724L
32	E61M3736
33	NOT USED
34	E62M3736
35	E62M3742
36	NOT USED
37	NOT USED
38	G03M3730
39	G03M3736
40	G03M3748
41	G04M3758
42	G08M3760
43	SS-1208

* LAB CASEWORK MODEL NUMBERS ARE BASED ON KEWAUNEE SCIENTIFIC STEEL CABINETS.

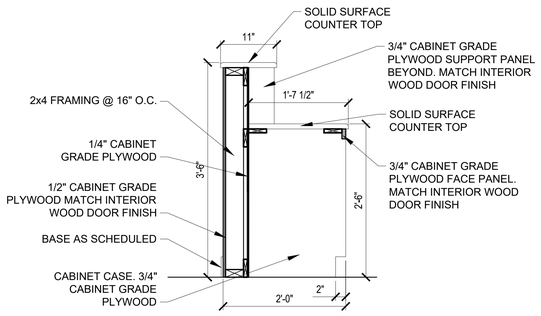

7 A-603 CASEWORK SECTION
SCALE: 1"=1'-0"

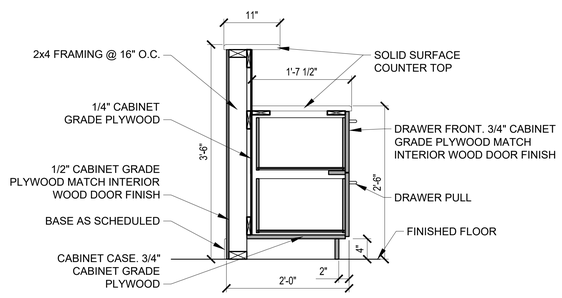

8 A-603 CASEWORK SECTION
SCALE: 1"=1'-0"

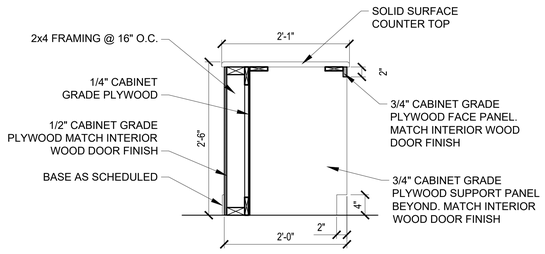

9 A-603 CASEWORK SECTION
SCALE: 1"=1'-0"

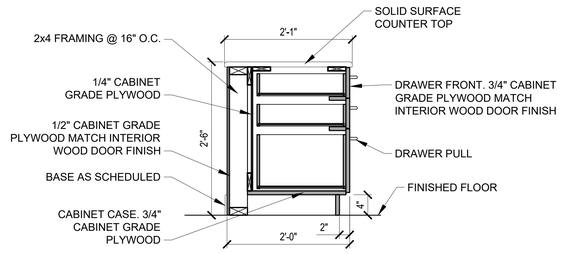

10 A-603 CASEWORK SECTION
SCALE: 1"=1'-0"

SCALE: 1/4"= 1'-0"

SCALE: 1"=1'-0"

Johnson M'Adams PLLC
ARCHITECTS/ENGINEERS PLANNING SURVEYING ENVIRONMENT
P.O. BOX 913, GREENWOOD, MISSISSIPPI - (662) 455-6963

NO.	DATE	BY	DESCRIPTION

REVISIONS

A-E FIRM	USDA
PROJECT MANAGER: REH	EPM: WN
DESIGNER: JLF	PPM: XXX
CHECKED BY: DRL	SAFETY & HEALTH: CM
JOB #: 5825	REAL PROPERTY: JS

USDA Agricultural Research Service

USDA AGRICULTURAL RESEARCH SERVICE
SUGARCANE RESEARCH LABORATORY
HOUMA, LOUISIANA

R. ADERN
D. EVANS

ENLARGED PLANS AND INTERIOR ELEVATIONS

PROJECT NO.	AGRICULTURAL RESEARCH SERVICE FACILITIES ENGINEERING BRANCH 5106 SUNNYSIDE AVENUE BELTSVILLE, MD 20705-5100	SHEET
XXX		A-603
DATE: 05/20/2026		69 OF 176

REGISTERED ARCHITECT Robin Earl Henry 2515 STATE OF MISSISSIPPI

Gulfport, MS

C:\Users\JMCHAE~1\AppData\Local\Temp\AcPublish_28588\A603.dwg
May 20, 2026 - 8:32am

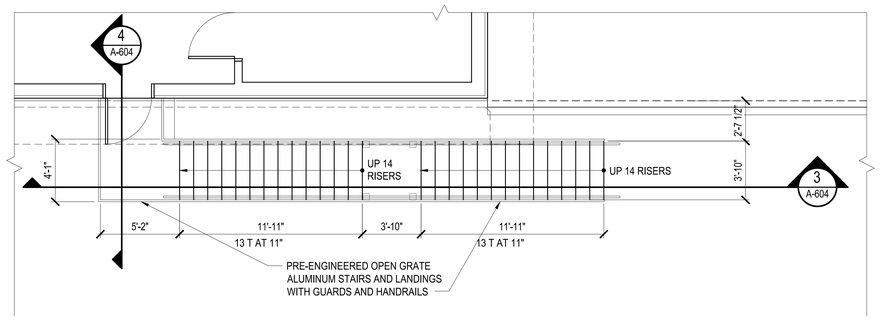

1 A-604 ENLARGED STAIR PLAN - SECOND FLOOR
SCALE: 1/4"=1'-0"

PLAN NORTH | TRUE NORTH

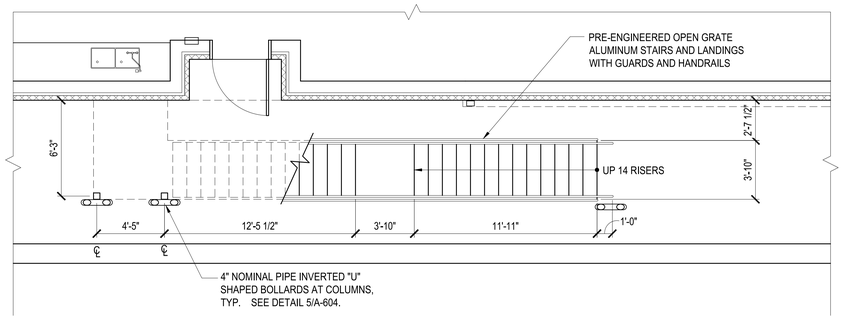

2 A-604 ENLARGED STAIR PLAN - FIRST FLOOR
SCALE: 1/4"=1'-0"

PLAN NORTH | TRUE NORTH

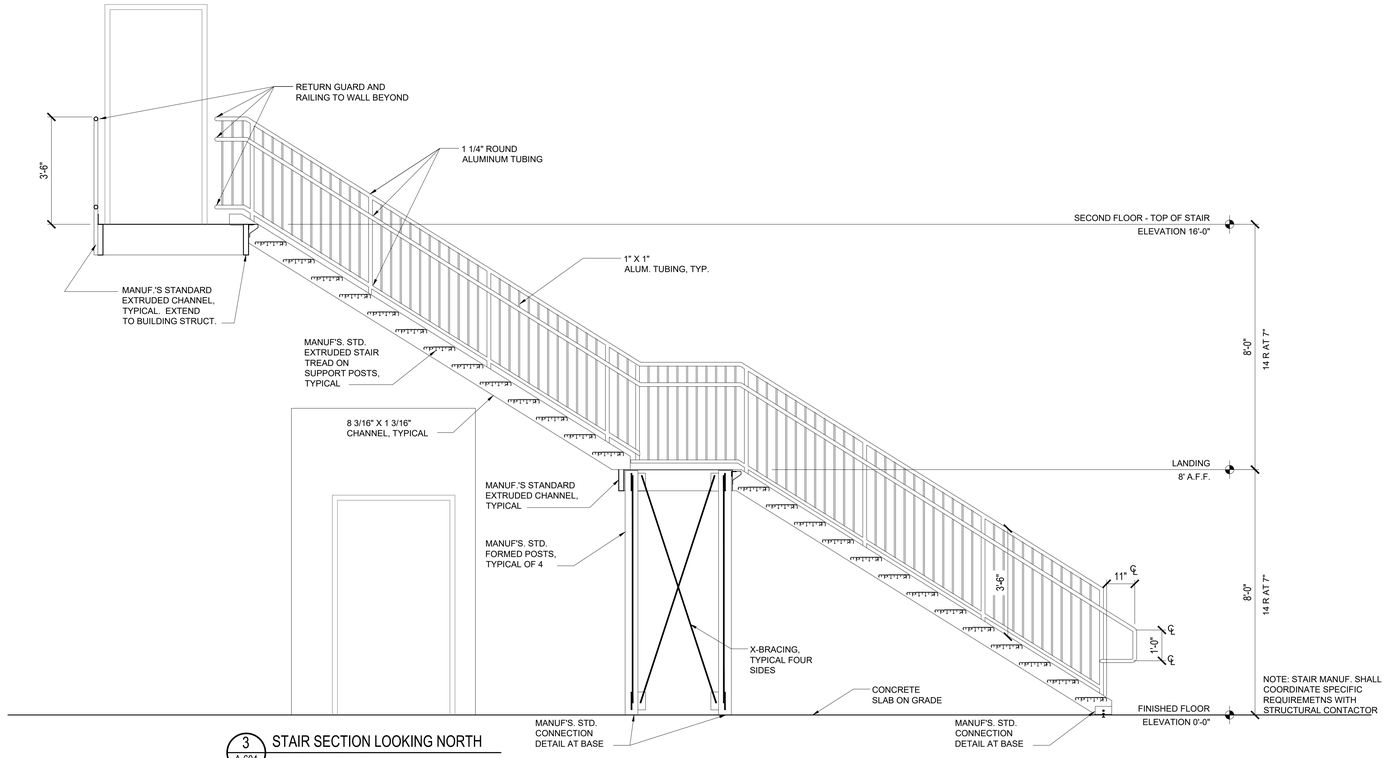

3 A-604 STAIR SECTION LOOKING NORTH
SCALE: 1/2"=1'-0"

GENERAL STAIR NOTE

1. SEE SPECIFICATION SECTION 05 51 00 FOR ALUMINUM STAIR SYSTEM.

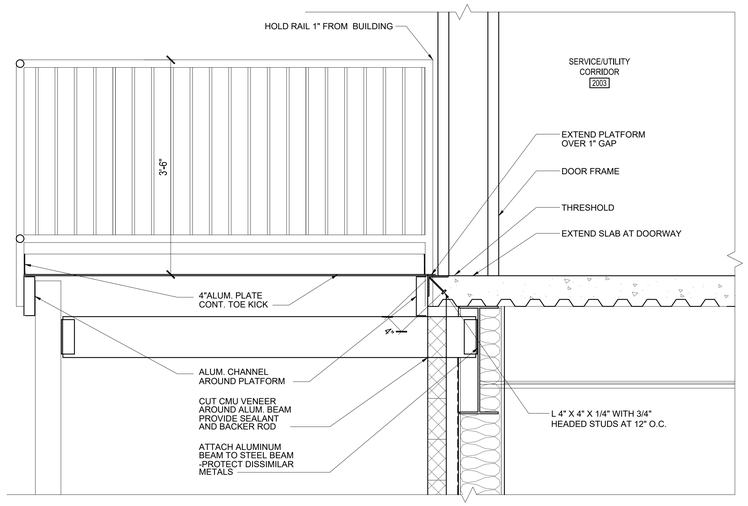

4 A-604 STAIR LANDING SECTION LOOKING WEST
SCALE: 1"=1'-0"

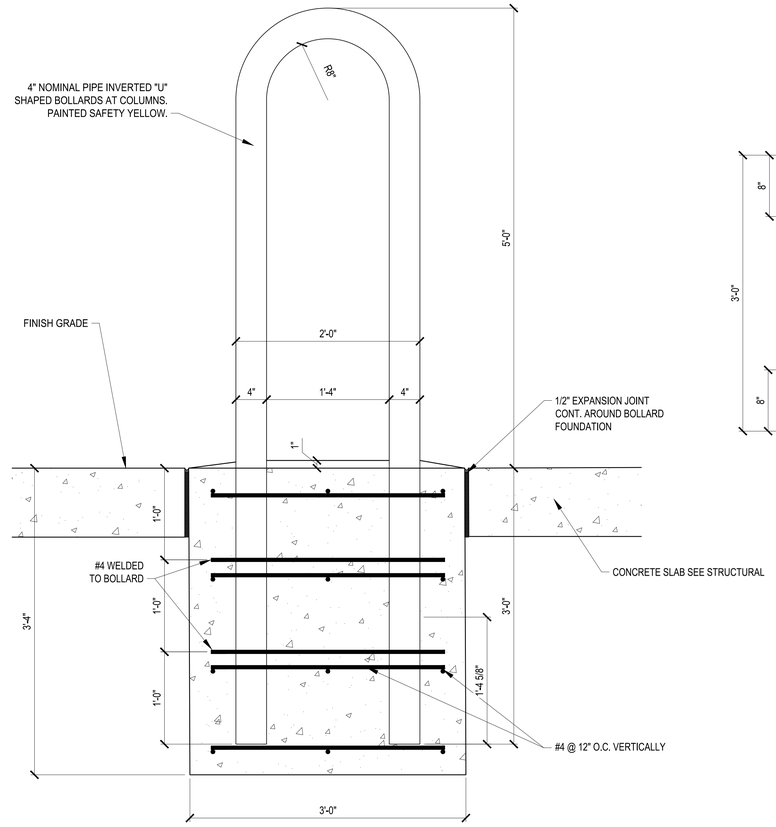

SECTION

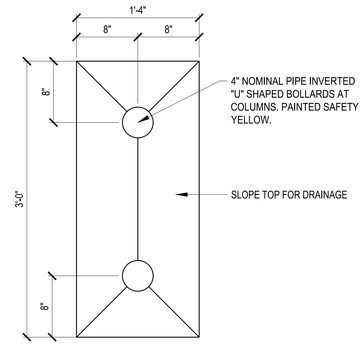

PLAN

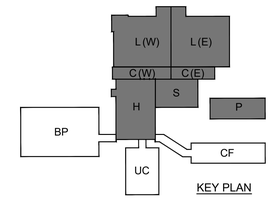

KEY PLAN

5 A-604 BOLLARD DETAIL
SCALE: 1/2"=1'-0"

SCALE: 1"=1'-0"

SCALE: 1 1/2"=1'-0"

SCALE: 1/4"= 1'-0"

SCALE: 1/2"=1'-0"

NO.	DATE	BY	DESCRIPTION
			REVISIONS

Johnson, Mirmiran & Thompson, Inc. ARCHITECTS/ENGINEERS PLANNERS CONSULTING ENVIRONMENT
P.O. BOX 313 GREENWOOD, MISSISSIPPI (662) 455-6441

A-E FIRM	USDA
PROJECT MANAGER	EPM
REH	WN
DESIGNER	PPM
JLF	XXX
CHECKED BY	SAFETY & HEALTH
DRL	CM
JOB #	REAL PROPERTY
5825	JS

USDA Agricultural Research Service

USDA AGRICULTURAL RESEARCH SERVICE
SUGARCANE RESEARCH LABORATORY
HOUMA, LOUISIANA

STAIR PLANS, SECTION AND DETAILS

PROJECT NO.	AGRICULTURAL RESEARCH SERVICE FACILITIES ENGINEERING BRANCH 5106 SUNNYSIDE AVENUE BELTSVILLE, MD 20705-5100	SHEET
XXX		A-604
DATE		70 OF 176
05/20/2026		

REGISTERED ARCHITECT — Robin Earl Henry — 255 — Greenwood, MS — STATE OF MISSISSIPPI

C:\Users\MICHAE~1\AppData\Local\Temp\AcPublish_28588\A604.dwg
May 20, 2026 - 8:33pm

COLORS AND MATERIALS SELECTIONS

FLOOR FINISHES

VINYL FLOORING
LVT-1: INTERFACE - SCORPIO 4.5MM, MUSHROOM A01714, 50CMX50CM

POLYURETHANE FLOOR COATING (CONC)
CONC-1: MAPEI - MAPEFLOOR SYSTEM 31, 440-60MIL - BASALT GRAY

CERAMIC TILE (CT)
CT-1 CROSSVILLE NEST - MINDFUL OAK 1"X6" MOSAIC
CT-2 CROSSVILLE NEST - MINDFUL OAK 8"X36"

GROUT (GRT)
GRT-1 MAPEI GROUT; 09 GRAY

ENTRY MAT (MAT)
MAT-1 CS-GROUP PEDIMAT M1 (SURFACE MOUNTED)
COLOR: 2098 GRIS CHARCOAL

BASE FINISHES

RESILIENT BASE (RB)
RB-1 ARMSTRONG, 32 PEBBLE

POLYURETHANE FLOOR COATING (CONC)
CONC-1: MAPEI - MAPEFLOOR SYSTEM 31, 440-60MIL - BASALT GRAY

CERAMIC TILE (CT)
CTB-1 CROSSVILLE NEST - MINDFUL OLIVE 6"X12"

PVC PROFILE (PVCP)
PVCP-1 SCHLUTER PROFILE SYSTEM, DILEX-HKW, LIGHT BEIGE (RESTROOMS)

WALL FINISHES

CERAMIC TILE (CT)
CT-3 CROSSVILLE NEST - MINDFUL OLIVE 8"X36"

GROUT (GRT)
GRT-1 MAPEI; 09 GRAY

PAINT
P-1 SHERWIN WILLIAMS, 7570 EGRET WHITE
P-2 SHERWIN WILLIAMS, 6193 PRIVILEGE GREEN

METAL PANEL (MTL)
MTL-1 MANUFACTURER'S STANDARD BEIGE

CEILING FINISHES

PAINTED CEILINGS
P-3 SHERWIN WILLIAMS, CEILING BRIGHT WHITE 7007

ACOUSTICAL TILE CEILING (ATC)
ACT-1 ARMSTRONG; 24" x 24" x 1" FINE FISSURED HIGH NRC TEGULAR, COLOR: WHITE; 15/16" EXPOSED TEE SUSPENSION SYSTEM; COLOR: WHITE
ACT-2 ARMSTRONG; 24" x 24" x 5/8" MINERAL FIBER CEILING TILE; #607 CERAMAGUARD FINE FISSURED, COLOR: WHITE; 15/16" EXPOSED TEE SUSPENSION SYSTEM; COLOR: WHITE

MISCELLANEOUS SURFACES

SOLID SURFACE (SS)
SS-1 FORMICA; COLOR: BLEACHED CONCRETE (C) (RESTROOM AND BREAKROOM COUNTERS)

TOILET PARTITIONS AND URINAL SCREENS (TP)
TP-1 SCRANTON PRODUCTS; CONCRETE

SIGNAGE
INTERIOR; BACKGROUND MATCH P-2, TEXT WHITE
EXTERIOR; BACKGROUND MATCH DOOR FINISH, TEXT BLACK

FIRE EXTINGUISHER CABINETS
PAINT TO MATCH SURROUNDING WALL

WALL SWITCH HANDLES, RECEPTACLE BODIES AND ELECTRICAL COVER PLATES:
WHITE (NOT IVORY)

HORIZONTAL BLINDS (HB)
BALI 1" ALUMINUM HORIZONTAL BLINDS; COLOR: PARCHMENT 535

INTERIOR DOOR / WINDOW FRAMES AND INTERIOR SURFACE OF EXTERIOR METAL DOORS AND FRAMES:
DOOR FRAMES TO MATCH SURROUNDING WALL

INTERIOR WOOD DOORS:
MAPLE WITH LIGHT POLYURETHANE SEALER

CORNER GUARDS (CG)
CG-1 CS-GROUP: STAINLESS STEEL

LAB CASEWORK (LC) / (LCT)
KEWAUNEE; COLOR: #91 SAGE ON METAL AND DURCON EPOXY RESIN GRAY TOPS

GENERAL NOTES

1. THE MANUFACTURER'S NAMES AND THEIR PRODUCTS REFERENCED ONLY INDICATE THE COLOR, TEXTURE, AND PATTERN REQUIRED FOR THE MATERIALS LISTED. THE PRODUCTS FURNISHED SHALL MEET THE COLOR, TEXTURE, AND PATTERN INDICATED AS WELL AS THE MATERIAL QUALITY AND PERFORMANCE SPECIFIED IN THE APPLICABLE TECHNICAL SPECIFICATIONS. THE USE OF MANUFACTURER'S NAMES AND PRODUCTS DO NOT PRECLUDE THE USE OF OTHER MANUFACTURER'S PRODUCTS OF APPROVED EQUAL COLOR, TEXTURE, AND/OR PATTERN IF ALL OTHER REQUIREMENTS ARE MET.
2. VISIBLE GRILLES, DIFFUSERS, AND OTHER MECHANICAL RELATED FINISH OPENING DEVICES INCLUDING FIRE ALARMS SHALL BE PAINTED TO MATCH COLOR OF ADJACENT SURFACE.
3. REFER TO APPROPRIATE ARCHITECTURAL DRAWINGS AND DETAILS TO PROPERLY ASSESS THE FULL EXTENT OF WORK REQUIRED. SPECIFICALLY REFER TO THE REFLECTED CEILING PLANS AND BUILDING SECTIONS TO DETERMINE HEIGHTS OF REQUIRED WALL MATERIALS, SPECIAL CONDITIONS AND STRUCTURES, ETC.
4. REFER TO EXTERIOR ELEVATIONS FOR EXTERIOR FINISH SELECTIONS.

5.A REFER TO 1/A-701 FOR ENTRY LOBBY FLOOR PATTERN.

5.B REFER TO 2/A7.01 FOR ENTRY MAT.

6. GYP BOARD WALL FINISH SHALL BE SATIN IN NON-LAB SPACES AND SEMI-GLOSS IN LAB SPACES. TRIM SHALL BE SEMI-GLOSS. ALL LATEX ENAMEL PAINT SHALL BE GLOSS FINISH.
7. REFER TO A-101.3 FOR SIGN SCHEDULE AND DETAILS.
8. MAT-1 SHALL BE FLUSH WITH ADJACENT FLOOR FINISH.

GENERAL NOTES

10. PROVIDE CERAMIC WAINSCOT (CT-3) ON WALLS SURROUNDING JANITOR'S SINK 48" AFF BY 48" WIDE (2 SIDES).
11. CORNER GUARD CG-1 SHALL BE USED ON ALL EXTERIOR CORNERS IN THE CORRIDORS OF THE LAB BUILDING. SEE DETAIL 2/A-101.3.
12. REFER TO 3/A-701 FOR WALL TILE PATTERN IN RESTROOMS AND SHOWERS.
13. INSTALL RESILIENT BASE (RB-1) ON GYP BOARD WALLS. METAL WALL PANELS SHALL HAVE NO BASE.

FINISH SCHEDULE / ABBREVIATIONS

AFF	ABOVE FINISHED FLOOR	LEP	LATEX ENAMAL PAINT
ALP	ACRYLIC LATEX PAINT	LKR	LOCKERS
ATC	ACOUSTIC TILE CEILING	MANUF	BY MANUFACTURER
CG	CORNER GUARD	MAT	ENTRY MAT
CBB	CONCRETE BACHER BOARD	MTL	METAL WALL PANEL
CONC	CONCRETE, SEALED	NA	NOT APPLICABLE
CT	CERAMIC TILE	PUFC	POLYURETHAND FLOOR COATING
EXP	EXPOSED STRUCTURE	PVCP	PVC PROFILE
GLB	GLAZED BLOCK	RB	RUBBER BASE
GN	GENERAL NOTE	SS	SOLID SURFACE
GRT	EPOXY GROUT	SAB	SHOWER AREA BENCE
GWB	GYPSUM WALL BOARD	SVF	SHEET VINYL FLOORING
HB	HORIZONTAL BLINDS	TP	TOILET PARTITION
LC	LAB CASEWORK	WMP	WIRE MESH PARTITION
LCT	LAB CASEWORK TOP		

1 A-701 FLOORING PLAN
SCALE: 1/4"=1'-0"
PLAN NORTH TRUE NORTH

2 A-701 FLOORING PLAN
SCALE: 1/4"=1'-0"
PLAN NORTH TRUE NORTH

3 A-701 TYP. RESTROOM WALL ELEVATION
SCALE: 1/4"=1'-0"

4 A-701 CERAMIC TILE BASE DETAILS
SCALE: NOT TO SCALE

0 2' 4' 8' 12'
SCALE: 1/4"= 1'-0"

ROOM FINISH SCHEDULE

ROOM NO.	ROOM NAME	FLOOR MATERIAL	BASE MATERIAL	NORTH WALL MATERIAL	NORTH WALL FINISH	EAST WALL MATERIAL	EAST WALL FINISH	SOUTH WALL MATERIAL	SOUTH WALL FINISH	WEST WALL MATERIAL	WEST WALL FINISH	CEILING MATERIAL	CEILING FINISH	CEILING HEIGHT	REMARKS
LABORATORY FIRST FLOOR															
1001	NOT USED	-	-	-	-	-	-	-	-	-	-	-	-	-	
1002	STORAGE	LVT-1	RB-1	GWB	P-1	GWB	P-1	GWB	P-1	GWB	P-1	ACT-1	NA	9'-6"	
1003	STORAGE	LVT-1	RB-1	GWB	P-1	GWB	P-1	GWB	P-1	GWB	P-1	ACT-1	NA	9'-6"	
1004	CONFERENCE ROOM	LVT-1	RB-1	GWB	P-1	GWB	P-1	GWB	P-2	GWB	P-1	ACT-1/GWB	NA/P-3	10'-4" / 9'-4"	
1005	PREP	LVT-1	RB-1	GWB	P-2	GWB	P-2	GWB	P-2	GWB	P-2	ACT-1	NA	9'-6"	
1006	JANITORIAL	CT-1	CTB-1	CBB	CT-3	CBB	CT-3	GWB	CT-3	GWB	CT-3	GWB	P-3	9'-6"	GN 10
1007	CORRIDOR	LVT-1	RB-1	GWB	P-1	GWB	P-1	GWB	P-1	GWB	P-1	ACT-1	NA	9'-6"	GN 11
1008	CORRIDOR	LVT-1	RB-1	GWB	P-1	GWB	P-1	GWB	P-1	GWB	P-1	ACT-1	NA	9'-6"	GN 11
1009	WOMEN	CT-1	CTB-1	GWB	CT-3	GWB	CT-3	GWB	CT-3	GWB	CT-3	GWB	P-3	9'-6"	GN 6, 12
1010	MEN	CT-1	CTB-1	GWB	CT-3	GWB	CT-3	GWB	CT-3	CBB	CT-3	GWB	P-3	9'-6"	GN 6, 12
1011	CORRIDOR	LVT-1	RB-1	GWB	P-1	GWB	P-1	GWB	P-1	GWB	P-1	ACT-1	NA	9'-6"	GN 11
1012	OFFICE	LVT-1	RB-1	GWB	P-2	GWB	P-1	GWB	P-1	GWB	P-1	ACT-1	NA	9'-6"	
1013	OFFICE	LVT-1	RB-1	GWB	P-2	GWB	P-1	GWB	P-1	GWB	P-1	ACT-1	NA	9'-6"	
1014	OFFICE	LVT-1	RB-1	GWB	P-2	GWB	P-1	GWB	P-1	GWB	P-1	ACT-1	NA	9'-6"	
1015	OFFICE	LVT-1	RB-1	GWB	P-2	GWB	P-1	GWB	P-1	GWB	P-1	ACT-1	NA	9'-6"	
1016	OFFICE	LVT-1	RB-1	GWB	P-2	GWB	P-1	GWB	P-1	GWB	P-1	ACT-1	NA	9'-6"	
1017	OFFICE	LVT-1	RB-1	GWB	P-2	GWB	P-1	GWB	P-1	GWB	P-1	ACT-1	NA	9'-6"	
1018	SMALL CONFERENCE	LVT-1	RB-1	GWB	P-1	GWB	P-1	GWB	P-1	GWB	P-1	ACT-1	NA	9'-6"	
1019	CORRIDOR	LVT-1/MAT-1	RB-1	GWB	P-1	GWB	P-1	GWB	P-1	GWB	P-1	ACT-1	NA	9'-6"	GN 5A, 5B, 11
1020	TECH OFFICE	LVT-1	RB-1	GWB	P-1	GWB	P-1	GWB	P-2	GWB	P-1	ACT-1	NA	9'-6"	
1021	TECH OFFICE	LVT-1	RB-1	GWB	P-1	GWB	P-1	GWB	P-2	GWB	P-1	ACT-1	NA	9'-6"	
1022	TECH OFFICE	LVT-1	RB-1	GWB	P-1	GWB	P-1	GWB	P-2	GWB	P-1	ACT-1	NA	9'-6"	
1023	CAT 3 OFFICE	LVT-1	RB-1	GWB	P-1	GWB	P-1	GWB	P-1	GWB	P-1	ACT-1	NA	9'-6"	
1024	CAT 3 OFFICE	LVT-1	RB-1	GWB	P-1	GWB	P-1	GWB	P-1	GWB	P-1	ACT-1	NA	9'-6"	
1025	TECHNICIAN OFFICE	LVT-1	RB-1	GWB	P-1	GWB	P-1	GWB	P-1	GWB	P-1	ACT-1	NA	9'-6"	
1026	TECHNICIAN OFFICE	LVT-1	RB-1	GWB	P-1	GWB	P-1	GWB	P-1	GWB	P-1	ACT-1	NA	9'-6"	
1027	CORRIDOR	LVT-1	RB-1	GWB	P-1	GWB	P-1	GWB	P-1	GWB	P-1	ACT-1	NA	9'-6"	GN 11
1028	STORAGE	LVT-1	RB-1	GWB	P-1	GWB	P-1	GWB	P-1	GWB	P-1	EXPOSED	NA	9'-6"	
1029	NOT USED	-	-	-	-	-	-	-	-	-	-	-	-	-	
1030	NOT USED	-	-	-	-	-	-	-	-	-	-	-	-	-	
1031	PLANT PHYSIOLOGY/SOILS	CONC-1	RB-1	GWB	P-1	GWB	P-1	GWB	P-1	GWB	P-1	ACT-2	NA	9'-6"	
1032	SUPPORT	CONC-1	RB-1	GWB	P-1	GWB	P-1	GWB	P-1	GWB	P-1	ACT-2	NA	9'-6"	
1033	SUPPORT	CONC-1	RB-1	GWB	P-1	GWB	P-1	GWB	P-1	GWB	P-1	ACT-2	NA	9'-6"	
1034	HALL	CONC-1	RB-1	GWB	P-1	GWB	P-1	GWB	P-1	GWB	P-1	ACT-2	NA	9'-6"	
1035	SCOPE	CONC-1	RB-1	GWB	P-1	GWB	P-1	GWB	P-1	GWB	P-1	ACT-2	NA	9'-6"	
1036	SCOPE	CONC-1	RB-1	GWB	P-1	GWB	P-1	GWB	P-1	GWB	P-1	ACT-2	NA	9'-6"	
1037	SHARED EQUIPMENT ROOM	CONC-1	RB-1	GWB	P-1	GWB	P-1	GWB	P-1	GWB	P-1	EXPOSED	NA	9'-6"	
1038	SUPPORT	CONC-1	RB-1	GWB	P-1	GWB	P-1	GWB	P-1	GWB	P-1	ACT-2	NA	9'-6"	
1039	STORAGE	CONC-1	RB-1	GWB	P-1	GWB	P-1	GWB	P-1	GWB	P-1	ACT-2	NA	9'-6"	
1040	SUPPORT	CONC-1	RB-1	GWB	P-1	GWB	P-1	GWB	P-1	GWB	P-1	ACT-2	NA	9'-6"	
1041	SERVICE/UTILITY CORRIDOR	CONC-1	RB-1	GWB	P-1	GWB	P-1	GWB	P-1	GWB	P-1	EXPOSED	P-3	VARIES	GN 11
1042	HALL	CONC-1	RB-1	GWB	P-1	GWB	P-1	GWB	P-1	GWB	P-1	ACT-2	NA	9'-6"	
1043	BSL-2 LABORATORY	CONC-1	RB-1	GWB	P-1	GWB	P-1	GWB	P-1	GWB	P-1	ACT-2	NA	9'-6"	
1044	SUPPORT	CONC-1	RB-1	GWB	P-1	GWB	P-1	GWB	P-1	GWB	P-1	ACT-2	NA	9'-6"	
1045	PATHOLOGY / MOLECULAR GENETICS (CLEAN)	CONC-1	RB-1	GWB	P-1	GWB	P-1	GWB	P-1	GWB	P-1	ACT-2	NA	9'-6"	
1046	PATHOLOGY / MOLECULAR GENETICS (DIRTY)	CONC-1	RB-1	GWB	P-1	GWB	P-1	GWB	P-1	GWB	P-1	ACT-2	NA	9'-6"	
1047	FILES	LVT-1	RB-1	GWB	P-1	GWB	P-1	GWB	P-1	GWB	P-1	ACT-1	NA	9'-6"	
1048	BREAK ROOM	LVT-1	RB-1	GWB	P-1	GWB	P-1	GWB	P-1	GWB	P-1	ACT-1	NA	9'-6"	
1049	POST DOC/TECHNICAL OFFICE	LVT-1	RB-1	GWB	P-1	GWB	P-1	GWB	P-1	GWB	P-1	ACT-1	NA	9'-6"	
1050	MAIL/WORK ROOM	LVT-1	RB-1	GWB	P-1	GWB	P-1	GWB	P-1	GWB	P-1	ACT-1	NA	9'-6"	
1051	ENTRY LOBBY	CT-2/MAT-1	RB-1	GWB	P-2	GWB	P-1	GWB	P-1	GWB	P-1	ACT-1	NA	16'-6"	GN 5A
1052	CORRIDOR	LVT-1	RB-1	GWB	P-1	GWB	P-1	GWB	P-1	GWB	P-1	ACT-1	NA	9'-6"	GN 11
1053	TECH OFFICE	LVT-1	RB-1	GWB	P-1	GWB	P-1	GWB	P-1	GWB	P-1	ACT-1	NA	9'-6"	
1054	TECH OFFICE	LVT-1	RB-1	GWB	P-1	GWB	P-1	GWB	P-1	GWB	P-1	ACT-1	NA	9'-6"	
1055	TECH OFFICE	LVT-1	RB-1	GWB	P-1	GWB	P-1	GWB	P-1	GWB	P-1	ACT-1	NA	9'-6"	
1056	PROGRAM ASSISTANT	LVT-1	RB-1	GWB	P-2	GWB	P-1	GWB	P-1	GWB	P-1	ACT-1	NA	16'-6"	
1057	RESEARCH LEADER	LVT-1	RB-1	GWB	P-2	GWB	P-1	GWB	P-1	GWB	P-1	ACT-1	NA	9'-6"	
1058	OFFICE	LVT-1	RB-1	GWB	P-2	GWB	P-1	GWB	P-1	GWB	P-1	ACT-1	NA	9'-6"	
1059	OFFICE	LVT-1	RB-1	GWB	P-2	GWB	P-1	GWB	P-1	GWB	P-1	ACT-1	NA	9'-6"	
1060	OFFICE	LVT-1	RB-1	GWB	P-1	GWB	P-1	GWB	P-1	GWB	P-1	ACT-1	NA	9'-6"	
1061	CORRIDOR	LVT-1	RB-1	GWB	P-2	GWB	P-1	GWB	P-1	GWB	P-1	ACT-1	NA	9'-6"	GN 11
LAB/OFFICE SECOND FLOOR															
2001	NOT USED	-	-	-	-	-	-	-	-	-	-	-	-	-	
2002	NOT USED	-	-	-	-	-	-	-	-	-	-	-	-	-	
2003	SERVICE/UTILITY CORRIDOR	CONC	RB-1/NA	GWB	ALP-1	GWB	ALP-1	MTL	NA	MTL	NA	EXPOSED	NA	VARIES	GN 13
2004	MECHANICAL PENTHOUSE	CONC	RB-1/NA	MTL	NA	MTL/GWB	NA/ALP-3	GWB	ALP-3	MTL	NA	EXPOSED	NA	VARIES	GN 13
2005	COMMUNICATIONS ROOM	CONC	RB-1	GWB	ALP-1	GWB	ALP-1	GWB	ALP-1	GWB	ALP-1	EXPOSED	NA	VARIES	
2006	ELECTRICAL ROOM	CONC	RB-1/NA	GWB	ALP-3	MTL	NA	MTL/GWB	NA/ALP-3	GWB	ALP-3	EXPOSED	NA	VARIES	GN 13
2007	STORAGE	CONC	RB-1	GWB	ALP-1	GWB	ALP-1	GWB	ALP-1	GWB	ALP-1	EXPOSED	NA	VARIES	
2102	CORRIDOR	CONC	RB-1/NA	GWB	NA	MTL/CMU	NA/ALP-1	GWB	ALP-1	MTL/GWB	NA/ALP-1	GWB	P-3	9'-1"	GN 13

THE Johnson McAdams FIRM P.A.
ARCHITECTS/ENGINEERS PLANNING SURVEYING MANAGEMENT
P.O. BOX 513, GREENWOOD, MISSISSIPPI - (662) 455-4943

NO.	DATE	BY	DESCRIPTION
REVISIONS			

A-E FIRM	USDA
PROJECT MANAGER REH	EPM WN
DESIGNER JLF	PPM XXX
CHECKED BY DRL	SAFETY & HEALTH CM
JOB # 5825	REAL PROPERTY JS

U S D A

USDA Agricultural Research Service

USDA AGRICULTURAL RESEARCH SERVICE
SUGARCANE RESEARCH LABORATORY
HOUMA, LOUISIANA

FINISH SELECTIONS AND FINISH SCHEDULES

PROJECT NO. XXX
DATE 05/20/2026

AGRICULTURAL RESEARCH SERVICE
FACILITIES ENGINEERING BRANCH
5106 SUNNYSIDE AVENUE
BELTSVILLE, MD 20705-5100

SHEET A-701
71 OF 176

C:\Users\MICHAE~1\AppData\Local\Temp\AcPublish_28588\A701.dwg
May 20, 2026 – 8:33am

GENERAL NOTE

1. SEE A-701 FOR FINISH SCHEDULE.

LEGEND

- LVT - 1
- CONC - 1
- CT - 1
- CT - 2
- MAT-1

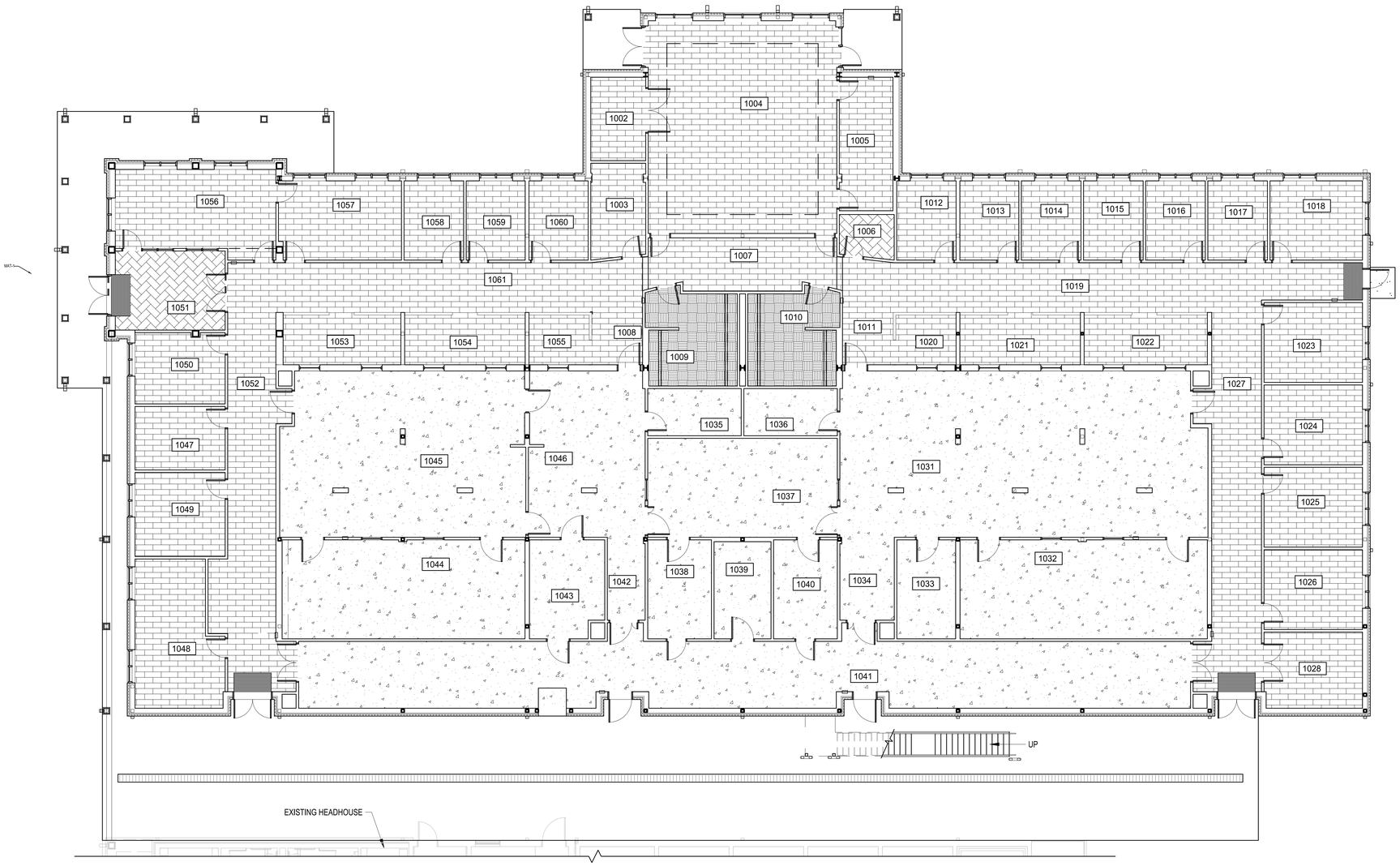

1 A-702 FIRST FLOOR - FLOOR FINISH PLAN
SCALE: 1/8"=1'-0"

PLAN NORTH TRUE NORTH

ROOM LEGEND

ROOM NO	ROOM NAME
1002	STORAGE
1003	STORAGE
1004	MEETING ROOM
1005	PREP
1006	JANITORIAL
1008	CORRIDPOR
1009	WOMEN
1010	MEN
1011	CORRIDOR
1012	OFFICE
1013	OFFICE
1014	OFFICE
1015	OFFICE
1016	OFFICE
1017	OFFICE
1018	SMALL CONFERENCE
1019	CORRIDOR
1020	TECH OFFICE
1021	TECH OFFICE
1022	TECH OFFICE
1023	CAT 3 OFFICE
1024	CAT 3 OFFICE
1025	TECHNICIAN OFFICE
1026	TECHNICIAN OFFICE
1027	CORRIDOR
1028	STORAGE
1031	PLANT PHYSIOLOGY / SOILS
1032	SUPPORT
1033	SUPPORT
1034	HALL
1035	SCOPE
1036	SCOPE
1037	SHARED EQUIPMENT ROOM
1038	SUPPORT
1039	STORAGE
1040	SUPPORT
1041	SERVICE / UTILITY CORRIDOR
1042	HALL
1043	BSL-2 LABORATORY
1044	SUPPORT
1045	PATHOLOGY / MOLECULAR GENETICS (CLEAN)
1046	PATHOLOGY / MOLECULAR GENETICS (DIRTY)
1047	FILES
1048	BREAK ROOM
1049	POST-DOC / TECHICAL OFFICE
1050	MAIL / WORK ROOM
1051	ENTRY LOBBY
1052	CORRIDOR
1053	TECH OFFICE
1054	TECH OFFICE
1055	TECH OFFICE
1056	PROGRAM ASSISTANT
1057	RESEARCH LEADER
1058	OFFICE
1059	OFFICE
1060	OFFICE
1061	CORRIDOR

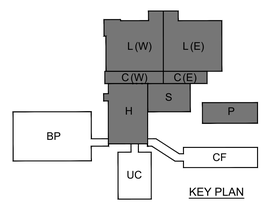

KEY PLAN

0 4' 8' 16' 24'
SCALE: 1/8"= 1'-0"

REGISTERED ARCHITECT
Robin Earl Henry
2515
Greenwood, MS
STATE OF MISSISSIPPI

Johnson McAdams
ARCHITECTS ENGINEERS PLANNERS SURVEYING MANAGEMENT
P.O. BOX 515, GREENWOOD, MISSISSIPPI - 38902-455-4943

NO.	DATE	BY	DESCRIPTION

REVISIONS

A-E FIRM	USDA
PROJECT MANAGER REH	EPM WN
DESIGNER JLF	PPM XXX
CHECKED BY DRL	SAFETY & HEALTH CM
JOB # 5825	REAL PROPERTY JS

USDA Agricultural Research Service

USDA AGRICULTURAL RESEARCH SERVICE
SUGARCANE RESEARCH LABORATOR
HOUMA, LOUISIANA

FIRST FLOOR - FLOOR FINISH PLAN

PROJECT NO. XXX
DATE 05/20/2026

AGRICULTURAL RESEARCH SERVICE
FACILITIES ENGINEERING BRANCH
5106 SUNNYSIDE AVENUE
BELTSVILLE, MD 20705-5100

SHEET 98
A-702
72 OF 176

C:\Users\MICHAE~1\AppData\Local\Temp\AcPublish_26588\A702.dwg
May 20, 2026 - 8:33am

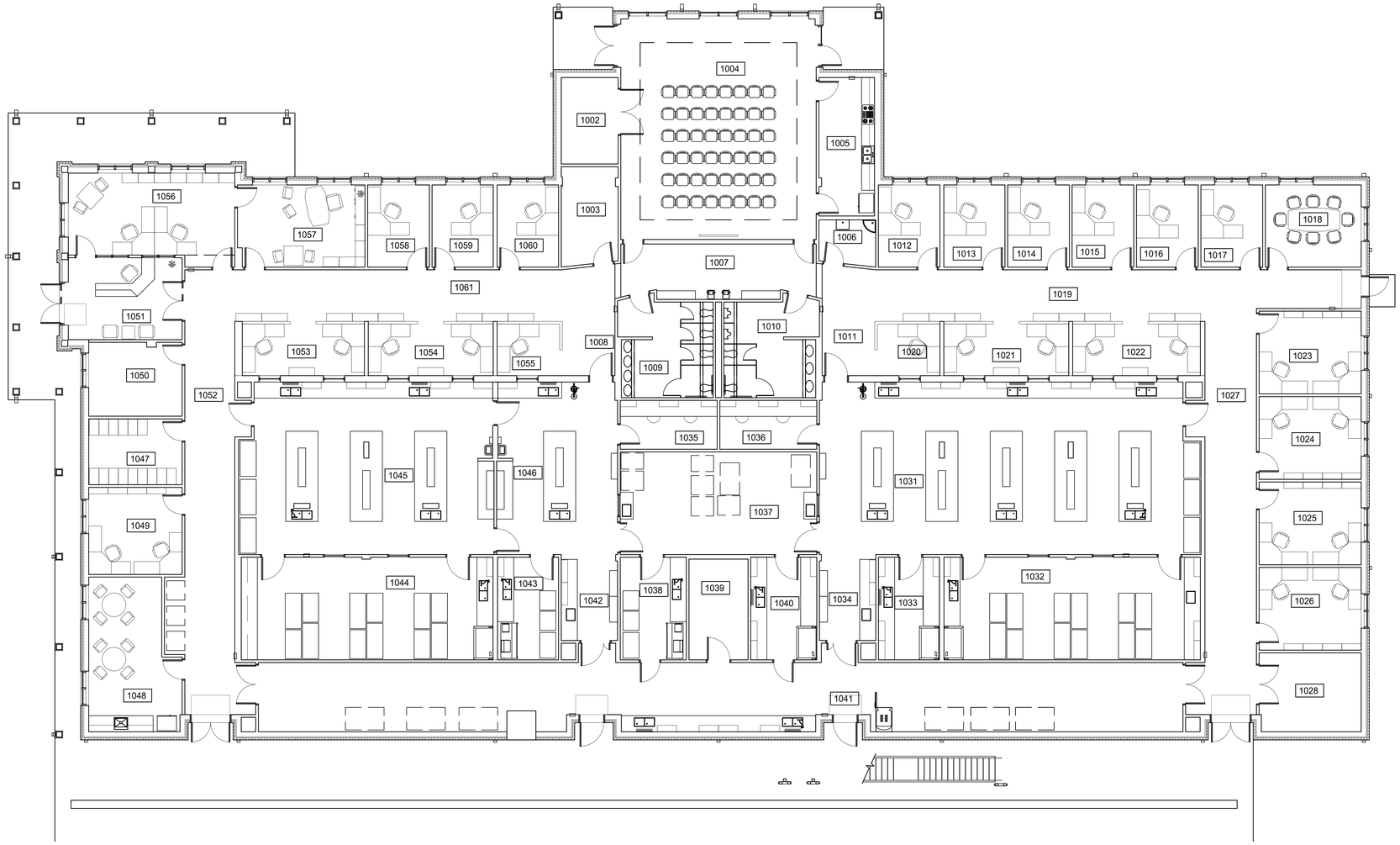

1 A-703 FIRST FLOOR FURNITURE PLAN

SCALE: 1/8"=1'-0"

PLAN NORTH

TRUE NORTH

NOTE: FURNITURE IS NOT IN CONTRACT. THIS DRAWING IS FOR INFORMATION ONLY TO ILLUSTRATE ROOM LAYOUT.

ROOM LEGEND

ROOM NO	ROOM NAME
1002	STORAGE
1003	STORAGE
1004	MEETING ROOM
1005	PREP
1006	JANITORIAL
1008	CORRIDPOR
1009	WOMEN
1010	MEN
1011	CORRIDOR
1012	OFFICE
1013	OFFICE
1014	OFFICE
1015	OFFICE
1016	OFFICE
1017	OFFICE
1018	SMALL CONFERENCE
1019	CORRIDOR
1020	TECH OFFICE
1021	TECH OFFICE
1022	TECH OFFICE
1023	CAT 3 OFFICE
1024	CAT 3 OFFICE
1025	TECHNICIAN OFFICE
1026	TECHNICIAN OFFICE
1027	CORRIDOR
1028	STORAGE
1031	PLANT PHYSIOLOGY / SOILS
1032	SUPPORT
1033	SUPPORT
1034	HALL
1035	SCOPE
1036	SCOPE
1037	SHARED EQUIPMENT ROOM
1038	SUPPORT
1039	STORAGE
1040	SUPPORT
1041	SERVICE / UTILITY CORRIDOR
1042	HALL
1043	BSL-2 LABORATORY
1044	SUPPORT
1045	PATHOLOGY / MOLECULAR GENETICS (CLEAN)
1046	PATHOLOGY / MOLECULAR GENETICS (DIRTY)
1047	FILES
1048	BREAK ROOM
1049	POST-DOC / TECHICAL OFFICE
1050	MAIL / WORK ROOM
1051	ENTRY LOBBY
1052	CORRIDOR
1053	TECH OFFICE
1054	TECH OFFICE
1055	TECH OFFICE
1056	PROGRAM ASSISTANT
1057	RESEARCH LEADER
1058	OFFICE
1059	OFFICE
1060	OFFICE
1061	CORRIDOR

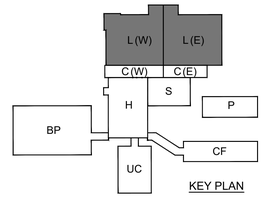

KEY PLAN

0 4' 8' 16' 24'

SCALE: 1/8"= 1'-0"

Johnson Mirmiran & Thompson, Inc. ARCHITECTS/ENGINEERS PLANNERS SURVEYORS ENVIRONMENTAL SCIENTISTS
P.O. BOX 513, GREENWOOD, MISSISSIPPI - (662) 455-4443

NO.	DATE	BY	DESCRIPTION

REVISIONS

A-E FIRM	USDA
PROJECT MANAGER: REH	EPM: WN
DESIGNER: JLF	PPM: XXX
CHECKED BY: DRL	SAFETY & HEALTH: CM
JOB #: 5825	REAL PROPERTY: JS

REGISTERED ARCHITECT Robin Earl Henry 2515 Commonwealth of Mississippi STATE OF MISSISSIPPI

USDA Agricultural Research Service

USDA AGRICULTURAL RESEARCH SERVICE
SUGARCANE RESEARCH LABORATOR
HOUMA, LOUISIANA

FIRST FLOOR FURNITURE PLAN

PROJECT NO. XXX	AGRICULTURAL RESEARCH SERVICE FACILITIES ENGINEERING BRANCH 5106 SUNNYSIDE AVENUE BELTSVILLE, MD 20705-5100	SHEET 98 A-703
DATE 05/20/2026		73 OF 176

C:\Users\MCHAE~1\AppData\Local\Temp\AcPublish_28588\A703.dwg
May 20, 2026 - 8:53am

DOOR SCHEDULE- LABORATORY/ OFFICES

DOOR NO.	DOOR SIZE (W x H x THK)	DOOR MATERIAL	DOOR TYPE	FRAME MATERIAL	FRAME TYPE	DETAILS HEAD	DETAILS JAMB	DETAILS SILL	FIRE RATING (MIN)	HDWR SETS (SEE SPEC)	REMARKS	DOOR NO.
1002	PR 42 X 84 X 1 3/4	WOOD	D	HOLLOW METAL	C	1/A-804	1/A-804	-	45	116		1002
1003	36 X 84 X 1 3/4	WOOD	D	HOLLOW METAL	A	1/A-804	1/A-804	-	45	115		1003
1004A	36 X 84 X 1 3/4	ALUMINUM	F	ALUMINUM	D / A-802	1/A-805	1/A-805	1/A-805		7		1004A
1004B	36 X 84 X 1 3/4	ALUMINUM	F	ALUMINUM	B / A-802	1/A-805	1/A-805	1/A-805		7		1004B
1005A	36 X 84 X 1 3/4	WOOD	D	HOLLOW METAL	A	1/A-804	1/A-804	-		111		1005A
1005B	36 X 84 X 1 3/4	WOOD	D	HOLLOW METAL	A	1/A-804	1/A-804	-		111		1005B
1006	36 X 84 X 1 3/4	WOOD	D	HOLLOW METAL	A	1/A-804	1/A-804	-		125		1006
1007A	36 X 84 X 1 3/4	WOOD	E	HOLLOW METAL	A	2/A-804	2/A-804	-		114		1007A
1007B	36 X 84 X 1 3/4	WOOD	E	HOLLOW METAL	A	2/A-804	2/A-804	-		114		1007B
1008	42 X 84 X 1 3/4	WOOD	C	HOLLOW METAL	A	3/A-804	3/A-804	-		102		1008
1009	36 X 84 X 1 3/4	WOOD	D	HOLLOW METAL	A	1/A-804	1/A-804	-		124		1009
1010	36 X 84 X 1 3/4	WOOD	D	HOLLOW METAL	A	1/A-804	1/A-804	-		124		1010
1011	42 X 85 X 1 3/4	WOOD	C	HOLLOW METAL	A	3/A-804	3/A-804	-		102		1011
1012	36 X 84 X 1 3/4	WOOD	C	HOLLOW METAL	A	1/A-804	1/A-804	-		106		1012
1013	36 X 84 X 1 3/4	WOOD	C	HOLLOW METAL	A	1/A-804	1/A-804	-		106		1013
1014	36 X 84 X 1 3/4	WOOD	C	HOLLOW METAL	A	1/A-804	1/A-804	-		106		1014
1015	36 X 84 X 1 3/4	WOOD	C	HOLLOW METAL	A	1/A-804	1/A-804	-		106		1015
1016	36 X 84 X 1 3/4	WOOD	C	HOLLOW METAL	A	1/A-804	1/A-804	-		106		1016
1017	36 X 84 X 1 3/4	WOOD	C	HOLLOW METAL	A	1/A-804	1/A-804	-		106		1017
1018	36 X 84 X 1 3/4	WOOD	C	HOLLOW METAL	A	1/A-804	1/A-804	-		112		1018
1019	36 X 84 X 1 3/4	HOLLOW METAL	B	HOLLOW METAL	B	1/A-803	1/A-803	1/A-803		6	INSULATED DOOR, GALV. DOOR AND FRAME	1019
1023	36 X 84 X 1 3/4	WOOD	C	HOLLOW METAL	A	1/A-804	1/A-804	-		106		1023
1024	36 X 84 X 1 3/4	WOOD	C	HOLLOW METAL	A	1/A-804	1/A-804	-		106		1024
1025	36 X 84 X 1 3/4	WOOD	C	HOLLOW METAL	A	1/A-804	1/A-804	-		106		1025
1026	36 X 84 X 1 3/4	WOOD	C	HOLLOW METAL	A	1/A-804	1/A-804	-		106		1026
1027	PR 36 X 84 X 1 3/4	HOLLOW METAL	B	HOLLOW METAL	D	1/A-803	1/A-803	1/A-803		3	INSULATED DOOR, GALV. DOOR AND FRAME	1027
1028	PR 36 X 84 X 1 3/4	WOOD	D	HOLLOW METAL	C	1/A-804	1/A-804	-	45	117		1028
1031	42 X 84 X 1 3/4	WOOD	C	HOLLOW METAL	A	1/A-804	1/A-804	-		102		1031
1032A	42 X 84 X 1 3/4	WOOD	C	HOLLOW METAL	A	1/A-804	1/A-804	-		107		1032A
1032B	42 X 84 X 1 3/4	WOOD	C	HOLLOW METAL	A	1/A-804	1/A-804	-		107		1032B
1033	42 X 84 X 1 3/4	WOOD	C	HOLLOW METAL	A	1/A-804	1/A-804	-		107		1033
1034	UNEQUAL 48 X 84 X 1 3/4	WOOD	C/D	HOLLOW METAL	C	1/A-804	1/A-804	-		103		1034
1035	36 X 84 X 1 3/4	WOOD	D	HOLLOW METAL	A	1/A-804	1/A-804	-		109		1035
1036	36 X 84 X 1 3/4	WOOD	D	HOLLOW METAL	A	1/A-804	1/A-804	-		109		1036
1037A	UNEQUAL 48 X 84 X 1 3/4	WOOD	C/D	HOLLOW METAL	C	1/A-804	1/A-804	-		110		1037A
1037B	UNEQUAL 48 X 84 X 1 3/4	WOOD	C/D	HOLLOW METAL	C	1/A-804	1/A-804	-		110		1037B
1038A	36 X 84 X 1 3/4	HOLLOW METAL	A	HOLLOW METAL	A	1/A-804	1/A-804	-		108	EXIT ONLY	1038A
1038B	36 X 84 X 1 3/4	WOOD	C	HOLLOW METAL	A	1/A-804	1/A-804	-		107		1038B
1039	42 X 84 X 1 3/4	HOLLOW METAL	A	HOLLOW METAL	A	1/A-804	1/A-804	-	45	115		1039
1040A	36 X 84 X 1 3/4	HOLLOW METAL	A	HOLLOW METAL	A	1/A-804	1/A-804	-		108	EXIT ONLY	1040A
1040B	36 X 84 X 1 3/4	WOOD	C	HOLLOW METAL	A	1/A-804	1/A-804	-		107		1040B
1041A	PR 36 X 84 X 1 3/4	HOLLOW METAL	B	HOLLOW METAL	C	1/A-804	1/A-804	-		101		1041A
1041B	44 X 84 X 1 3/4	HOLLOW METAL	B	HOLLOW METAL	B	1/A-803	1/A-803	1/A-803		5	INSULATED DOOR, GALV. DOOR AND FRAME	1041B
1041C	44 X 84 X 1 3/4	HOLLOW METAL	B	HOLLOW METAL	B	1/A-803	1/A-803	1/A-803	45	4	INSULATED DOOR, GALV. DOOR AND FRAME	1041C
1041D	PR 36 X 84 X 1 3/4	HOLLOW METAL	B	HOLLOW METAL	C	1/A-804	1/A-804	-		101		1041D
1042	UNEQUAL 48 X 84 X 1 3/4	WOOD	C/D	HOLLOW METAL	C	1/A-804	1/A-804	-		103		1042
1043A	42 X 84 X 1 3/4	WOOD	C	HOLLOW METAL	A	1/A-804	1/A-804	-		8		1043A
1043B	42 X 84 X 1 3/4	WOOD	C	HOLLOW METAL	A	1/A-804	1/A-804	-		8		1043B
1044A	42 X 84 X 1 3/4	WOOD	C	HOLLOW METAL	A	1/A-804	1/A-804	-		107		1044A
1044B	42 X 84 X 1 3/4	WOOD	C	HOLLOW METAL	A	1/A-804	1/A-804	-		107		1044B
1045A	42 X 84 X 1 3/4	WOOD	C	HOLLOW METAL	A	2/A-804	2/A-804	-		102		1045A
1045B	42 X 84 X 1 3/4	WOOD	C	HOLLOW METAL	A	1/A-804	1/A-804	-		107		1045B
1045C	42 X 84 X 1 3/4	WOOD	C	HOLLOW METAL	A	1/A-804	1/A-804	-		107		1045C
1047	36 X 84 X 1 3/4	WOOD	D	HOLLOW METAL	A	1/A-804	1/A-804	-		115		1047
1048	36 X 84 X 1 3/4	WOOD	C	HOLLOW METAL	A	1/A-804	1/A-804	-		113		1048
1049	36 X 84 X 1 3/4	WOOD	C	HOLLOW METAL	A	1/A-804	1/A-804	-		106		1049
1050	36 X 84 X 1 3/4	WOOD	E	HOLLOW METAL	A	1/A-804	1/A-804	-		106		1050
1051A	PR 36 X 84 X 1 3/4	WOOD	E	HOLLOW METAL	C	1/A-804	1/A-804	-		100		1051A
1051B	PR 37 X 84 X 1 3/4	ALUMINUM	F	ALUMINUM	E / A-802	1/A-806	1/A-806	1/A-806		1	LOW ENERGY POWER OPERARORR- SOUTH LEAF	1051B
1052	PR 36 X 84 X 1 3/4	HOLLOW METAL	B	HOLLOW METAL	D	1/A-803	1/A-803	1/A-803	45	2	INSULATED DOOR, GALV. DOOR AND FRAME	1052
1056A	36 X 84 X 1 3/4	WOOD	C	HOLLOW METAL	A	1/A-804	1/A-804	-		106		1056A
1056B	36 X 84 X 1 3/4	WOOD	C	HOLLOW METAL	A	1/A-804	1/A-804	-		105		1056B
1057A	36 X 84 X 1 3/4	WOOD	C	HOLLOW METAL	A	1/A-804	1/A-804	-		106+SOUND SEALS		1057A
1057B	36 X 84 X 1 3/4	WOOD	C	HOLLOW METAL	A	1/A-804	1/A-804	-		111+SOUND SEALS		1057B
1058	36 X 84 X 1 3/4	WOOD	C	HOLLOW METAL	A	1/A-804	1/A-804	-		106		1058
1059	36 X 84 X 1 3/4	WOOD	C	HOLLOW METAL	A	1/A-804	1/A-804	-		106		1059
1060	36 X 84 X 1 3/4	WOOD	C	HOLLOW METAL	A	1/A-804	1/A-804	-		106		1060
2003A	36 X 84 X 1 3/4	HOLLOW METAL	B	HOLLOW METAL	A	6/A-804	6/A-804	6/A-804	90	131		2003A
2003B	36 X 84 X 1 3/4	HOLLOW METAL	B	HOLLOW METAL	A	2/A-803	2/A-803	2/A-803		10	INSULATED DOOR, GALV. DOOR AND FRAME	2003B
2003C	96 x 108 x 1	STEEL	G	STEEL	E	3/A-803	3/A-803	3/A-803		17	INSULATED DOOR, GALV. DOOR AND GUIDES	2003C
2004A	36 X 84 X 1 3/4	HOLLOW METAL	A	HOLLOW METAL	A	1/A-804	1/A-804	-	45	129		2004A
2004B	36 X 84 X 1 3/4	HOLLOW METAL	A	HOLLOW METAL	A	1/A-804	1/A-804	-	45	129		2004B
2004C	96 x 108 x 1	STEEL	G	STEEL	E	5/A-804	5/A-804	5/A-804	45	123		2004C
2005	36 X 84 X 1 3/4	HOLLOW METAL	A	HOLLOW METAL	A	1/A-804	1/A-804	-		128		2005
2006A	36 X 84 X 1 3/4	HOLLOW METAL	A	HOLLOW METAL	A	5/A-804	5/A-804	-	90	129		2006A
2006B	PR 42 X 84 X 1 3/4	HOLLOW METAL	A	HOLLOW METAL	C	5/A-804	5/A-804	-	90	130		2006B
2007	36 X 84 X 1 3/4	HOLLOW METAL	A	HOLLOW METAL	A	1/A-804	1/A-804	-		115		2007
2102	36 X 84 X 1 3/4	HOLLOW METAL	B	HOLLOW METAL	A	6/A-804	6/A-804	6/A-804	90	131		2102

DOOR TYPES

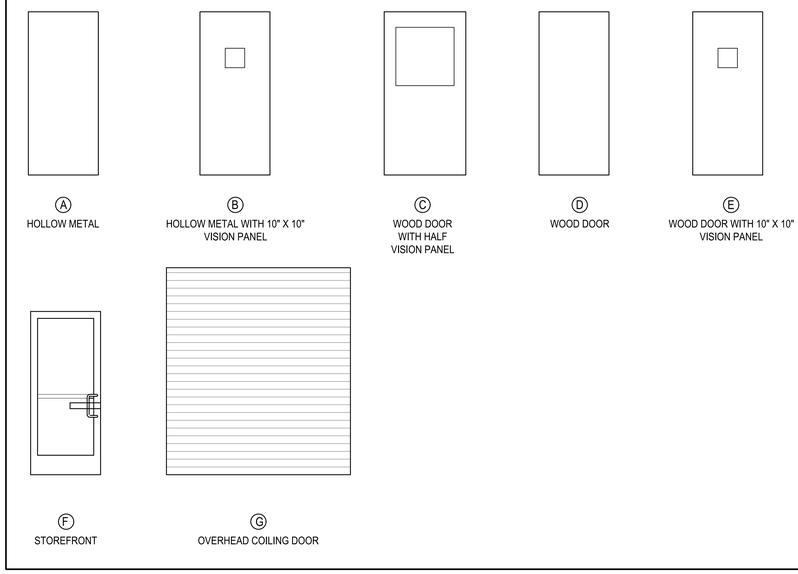

FRAME TYPES

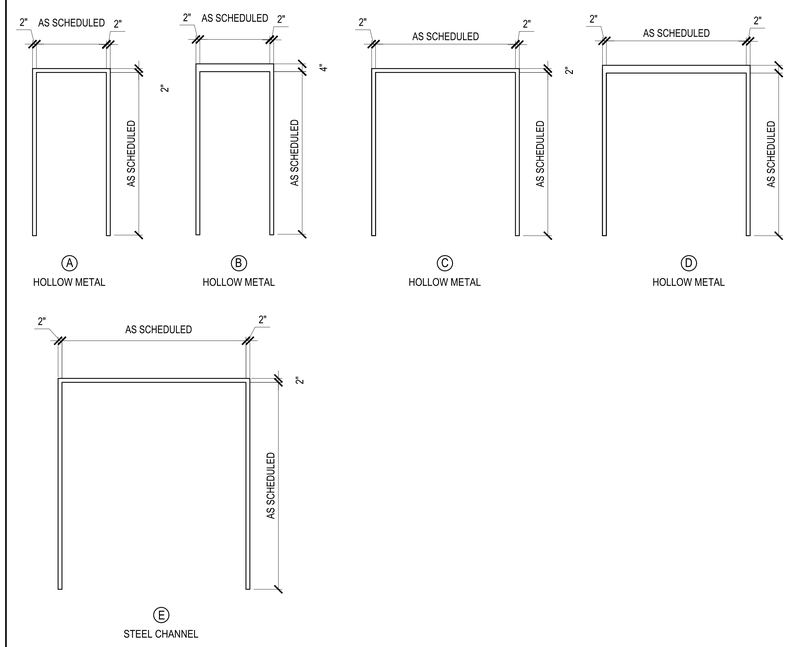

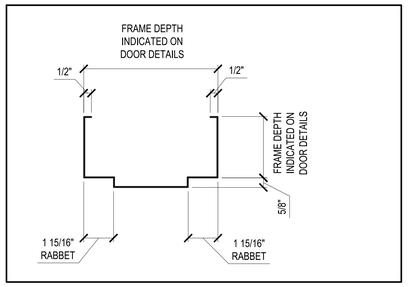

1 A-801 FRAME PROFILE
SCALE: 3"=1'-0"

0 3" 6" 1'
SCALE: 3"=1'-0"

Johnson M'Adams PA
ARCHITECTS/ENGINEERS PLANNERS SURVEYORS
P.O. BOX 511, GREENWOOD, MISSISSIPPI - (662) 455-6443

NO.	DATE	BY	DESCRIPTION
			REVISIONS

A-E FIRM	USDA
PROJECT MANAGER	EPM
REH	WN
DESIGNER	PPM
JLF	XXX
CHECKED BY	SAFETY & HEALTH
DRL	CM
JOB #	REAL PROPERTY
5825	JS

USDA Agricultural Research Service

USDA AGRICULTURAL RESEARCH SERVICE
SUGARCANE RESEARCH LABORATORY
HOUMA, LOUISIANA

DOOR SCHEDULE

PROJECT NO.	AGRICULTURAL RESEARCH SERVICE FACILITIES ENGINEERING BRANCH 5106 SUNNYSIDE AVENUE BELTSVILLE, MD 20705-5100	SHEET
XXX		A-801
DATE		74 OF 176
05/20/2026		

REGISTERED ARCHITECT Robin Earl Henry 2515 STATE OF MISSISSIPPI

C:\Users\JMCHAE~1\Appdata\Local\Temp\AcPublish_28568\A801.dwg
May 20, 2026 - 8:53am

EXTERIOR WINDOW TYPES

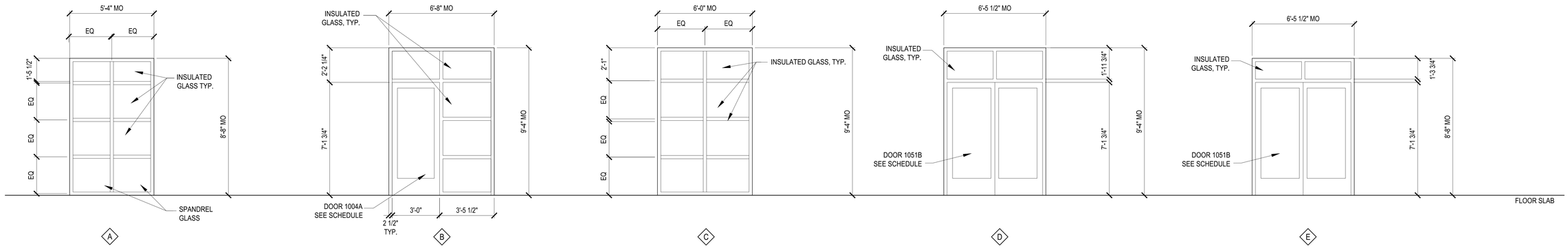

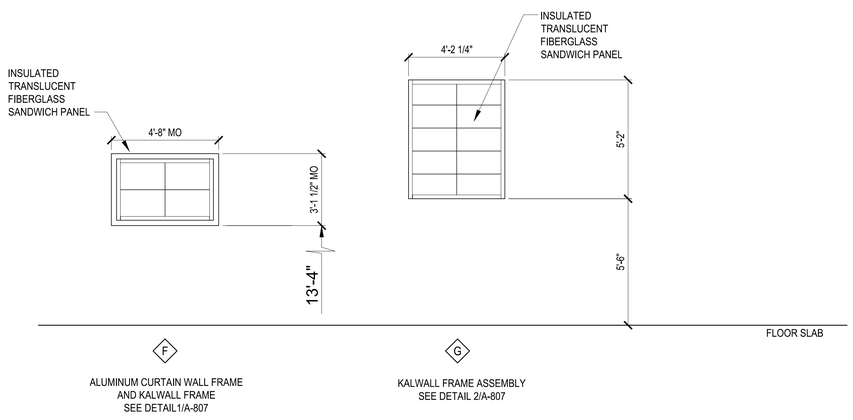

NOTES:

1. REFER TO SHEETS A-805 THROUGH A-808 FOR WINDOW AND LOUVER DETAILS.

INTERIOR WINDOW TYPE

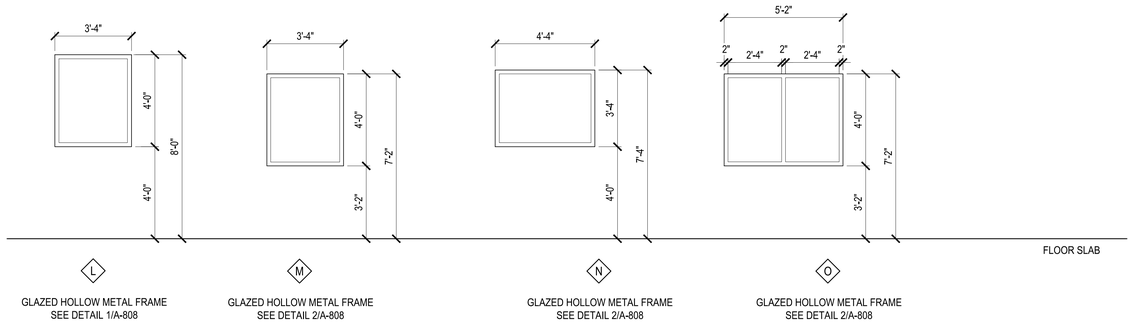

LOUVER TYPE

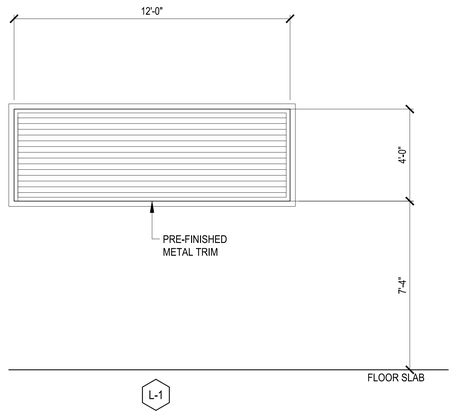

FORCE PROTECTION CRITERIA:

EXTERIOR ALUMINUM WINDOW AND CURTAIN WALL FRAMES

FRAMES AND MULLIONS SHALL RESIST A STATIC LOAD OF 7 KILOPASCALS APPLIED TO THE SURFACE OF THE GLAZING. FRAME AND MULLION DEFORMATIONS SHALL NOT EXCEED 1/160 OF THE UNSUPPORTED MEMBER LENGHTS. STRUCTURAL GLAZED WINDOWS SHALL HAVE A MINIMUM FRAME BITE OF 3/8" NON-STRUCTURALLY GLAZED WINDOWS SHALL HAVE A BITE OF 1".

DESIGN FRAME CONNECTIONS TO SURROUNDING WALLS OR ROOF, HARDWARE AND ASSOCIATED CONNECTIONS, AND GLAZING STOP CONNECTIONS TO RESIST AN EQUIVALENT STATIC DESIGN LOAD OF 75 KILOPASCALS APPLIED TO THE SURFACE OF THE GLAZING AND FRAME FOR GLAZING PANELS WITH A VISION AREA LESS THAN OR EQUAL TO 1.0 SQUARE METER AND 30 KILOPASCALS FOR GLAZING PANELS WITH A VISION AREA GREATER THAT 1.0 SQUARE METERS BUT LESS THAN OR EQUAL TO 3.0 SQUARE METERS. FRAME MEMBERS, CONNECTIONS AND HARDWARE MAY BE DESIGNED BASED ON ULTIMATE STRENGTH FOR STEEL AND 0.2% OFFSET YIELD STRENGTH FOR ALUMINUM.

0 2' 4' 8' 12'

SCALE: 1/4"= 1'-0"

Johnson Mº Adams PSM P.A.
ARCHITECTS/ENGINEERS PLANNERS SURVEYING MANAGEMENT
P.O. BOX 519, GREENWOOD, MISSISSIPPI - (662) 455-6441

NO.	DATE	BY	DESCRIPTION

REVISIONS

A-E FIRM	USDA
PROJECT MANAGER	REH
EPM	WN
DESIGNER	JLF
PPM	XXX
CHECKED BY	DRL
SAFETY & HEALTH	CM
JOB #	5825
REAL PROPERTY	JS

USDA Agricultural Research Service

USDA AGRICULTURAL RESEARCH SERVICE
SUGARCANE RESEARCH LABORATORY
HOUMA, LOUISIANA

WINDOW AND LOUVER TYPES

PROJECT NO.	XXX
DATE	05/20/2026

AGRICULTURAL RESEARCH SERVICE
FACILITIES ENGINEERING BRANCH
5106 SUNNYSIDE AVENUE
BELTSVILLE, MD 20705-5100

SHEET A-802

REGISTERED ARCHITECT
Tom Earl Henry
2515
Greenwood, MS
STATE OF MISSISSIPPI

C:\Users\MICHAE~1\AppData\Local\Temp\AcPublish_28588\A802.dwg
May 20, 2026 - 8:53am

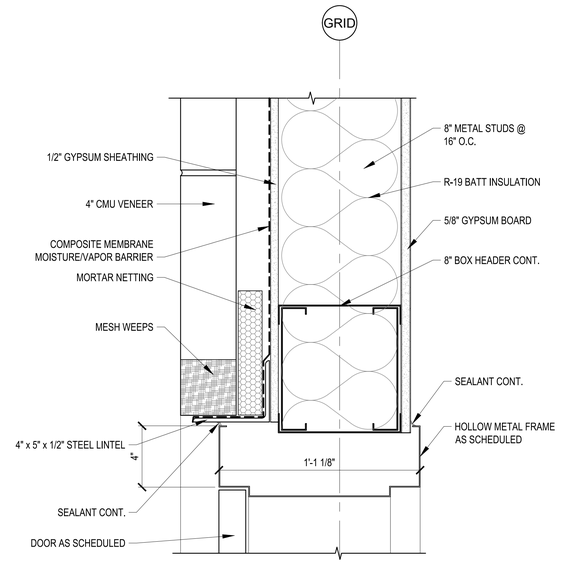

HEAD

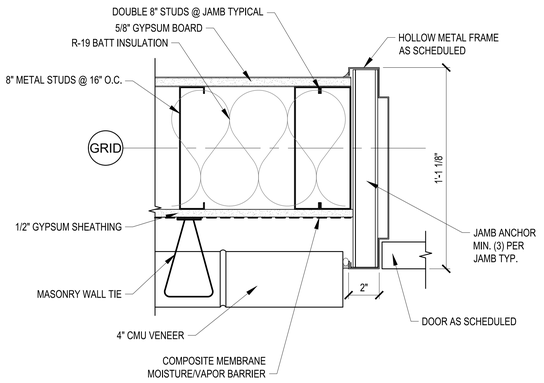

JAMB

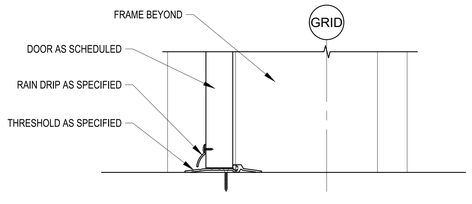

SILL

1 A-803 DOOR DETAIL
SCALE: 3"=1'-0"

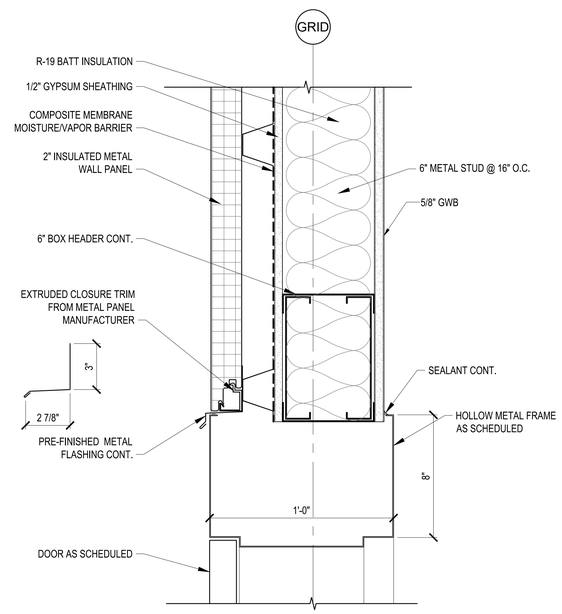

HEAD

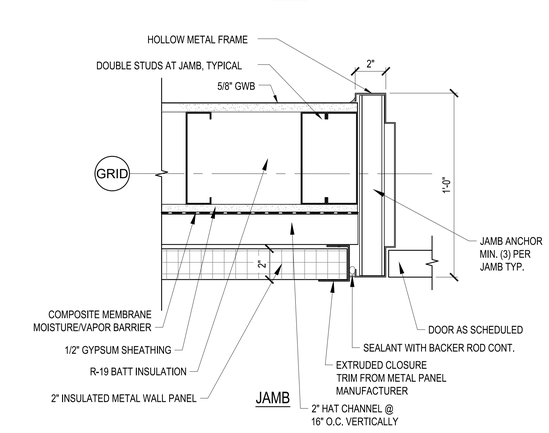

JAMB

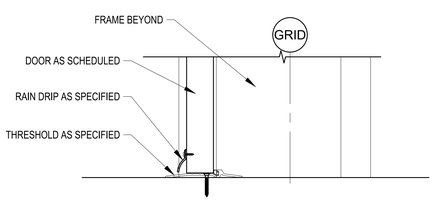

SILL

2 A-803 DOOR DETAIL
SCALE: 3"=1'-0"

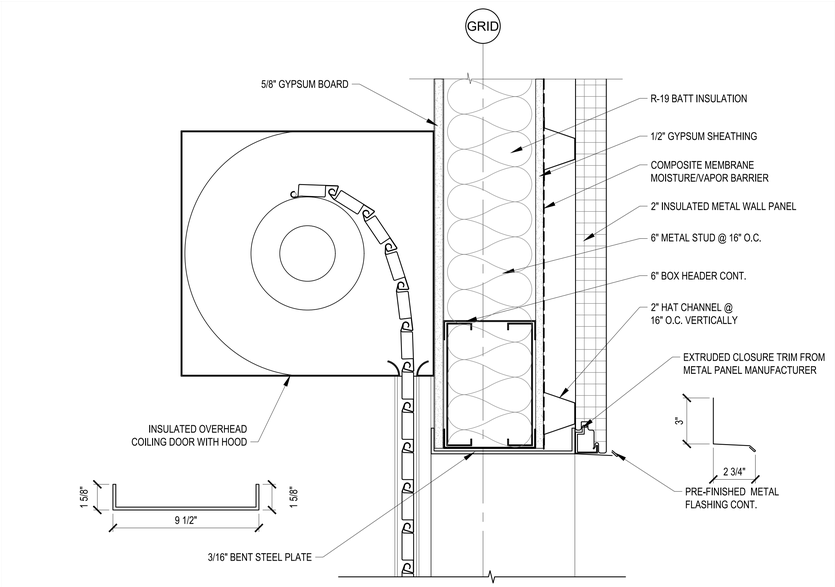

HEAD

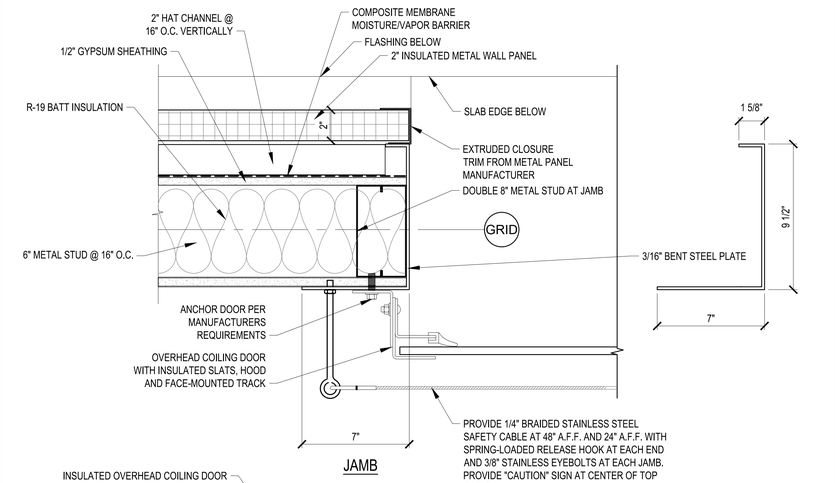

JAMB

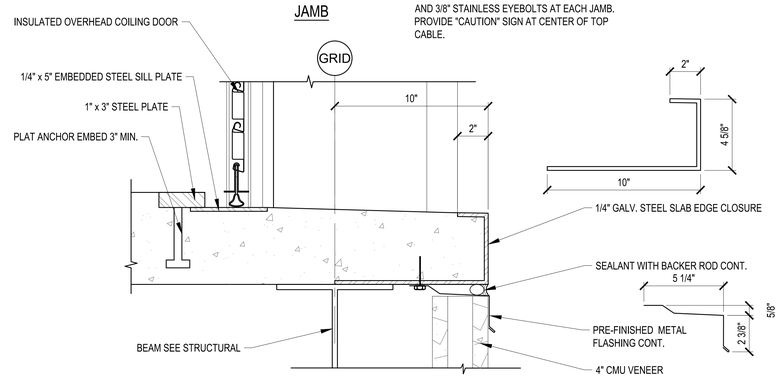

SILL

3 A-803 DOOR DETAIL
SCALE: 3"=1'-0"

0 3" 6" 1'
SCALE: 3"=1'-0"

REGISTERED ARCHITECT
Robin Earl Henry, AIA
2515
Greenwood, MS
STATE OF MISSISSIPPI

NO.	DATE	BY	DESCRIPTION

REVISIONS

USDA Agricultural Research Service

USDA AGRICULTURAL RESEARCH SERVICE
SUGARCANE RESEARCH LABORATORY
HOUMA, LOUISIANA

DOOR DETAILS

A-E FIRM	USDA
PROJECT MANAGER	REH
EPM	WN
DESIGNER	JLF
PPM	XXX
CHECKED BY	DRL
SAFETY & HEALTH	CM
JOB #	5825
REAL PROPERTY	JS

PROJECT NO.	AGRICULTURAL RESEARCH SERVICE FACILITIES ENGINEERING BRANCH 5106 SUNNYSIDE AVENUE BELTSVILLE, MD 20705-5100	SHEET
XXX		A803
DATE		76 OF 176
05/20/2026		

C:\Users\JMCHAE~1\AppData\Local\Temp\AcPublish_20588\A803.dwg
May 20, 2026 - 4:30pm

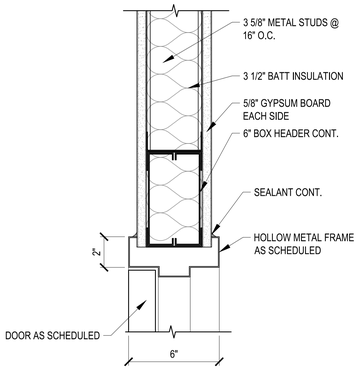

HEAD

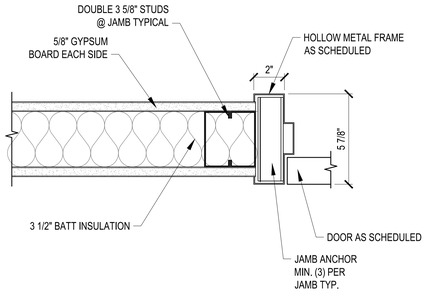

JAMB

1 A-804 DOOR DETAIL
SCALE: 3"=1'-0"

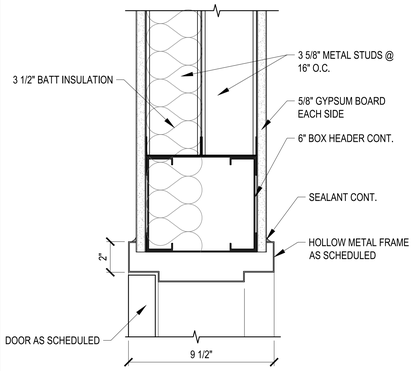

HEAD

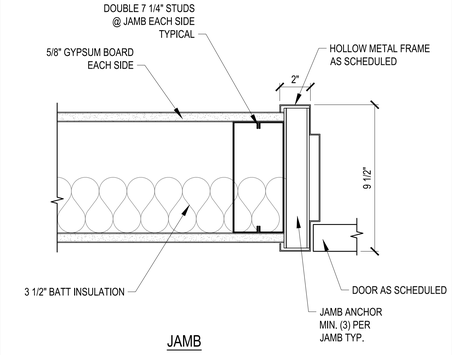

JAMB

2 A-804 DOOR DETAIL
SCALE: 3"=1'-0"

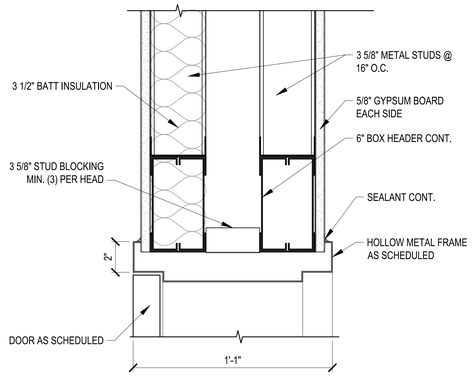

HEAD

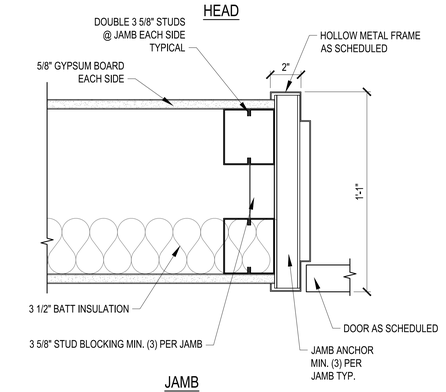

JAMB

3 A-804 DOOR DETAIL
SCALE: 3"=1'-0"

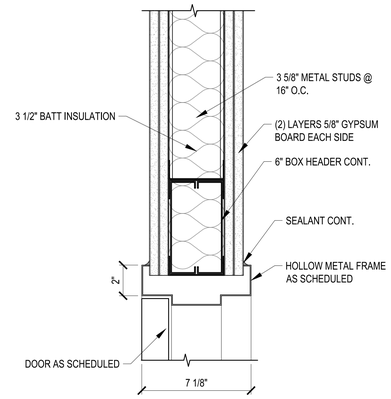

HEAD

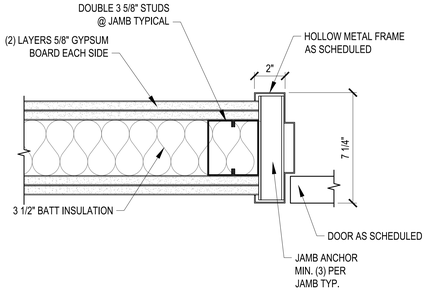

JAMB

4 A-804 DOOR DETAIL
SCALE: 3"=1'-0"

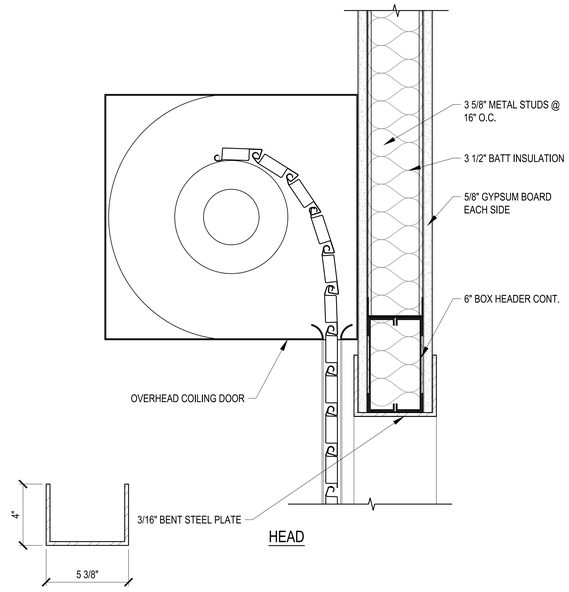

HEAD

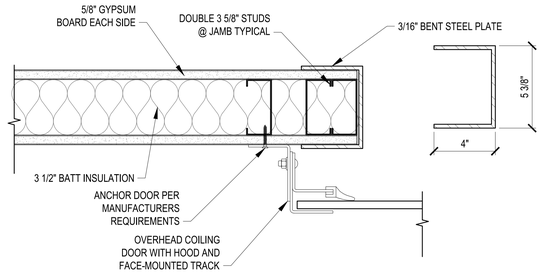

JAMB

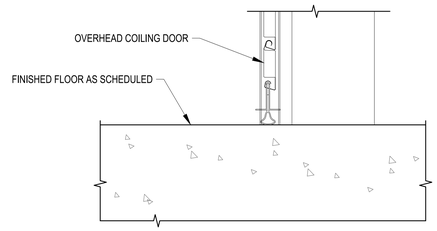

SILL

5 A-804 DOOR DETAIL
SCALE: 3"=1'-0"

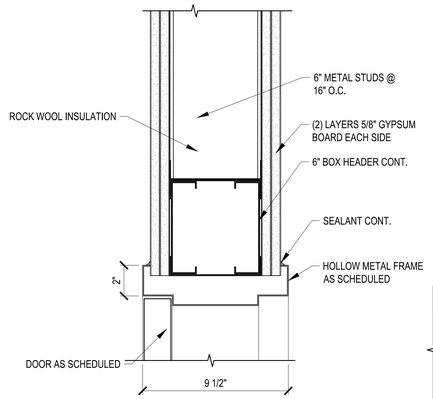

HEAD

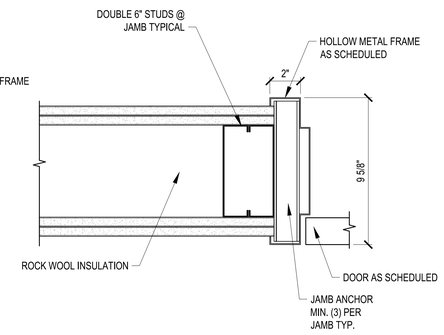

JAMB

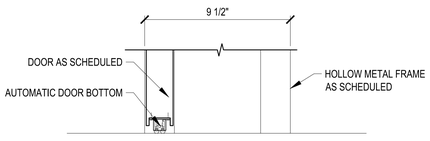

SILL

6 A-804 DOOR DETAIL
SCALE: 3"=1'-0"

0 3" 6" 1'

SCALE: 3"=1'-0"

NO.	DATE	BY	DESCRIPTION

REVISIONS

Johnson Mˢ Adams PLLC
ARCHITECTS / ENGINEERS / PLANNERS
P.O. BOX 513, GREENWOOD, MISSISSIPPI - (662) 455-6943

A-E FIRM	USDA
PROJECT MANAGER: REH	EPM: WN
DESIGNER: JLF	PPM: XXX
CHECKED BY: DRL	SAFETY & HEALTH: CM
JOB #: 5825	REAL PROPERTY: JS

REGISTERED ARCHITECT — Robin Earl Henry — 2515 — Greenwood, MS — STATE OF MISSISSIPPI

USDA Agricultural Research Service

USDA AGRICULTURAL RESEARCH SERVICE
SUGARCANE RESEARCH LABORATORY
HOUMA, LOUISIANA

DOOR DETAILS

PROJECT NO.	AGRICULTURAL RESEARCH SERVICE FACILITIES ENGINEERING BRANCH 5106 SUNNYSIDE AVENUE BELTSVILLE, MD 20705-5100	SHEET
XXX		A-804
DATE: 05/20/2026		77 OF 176

C:\Users\MICHAE~1\Appdata\Local\Temp\AcPublish_20556\A804.dwg
May 20, 2026 - 8:53am

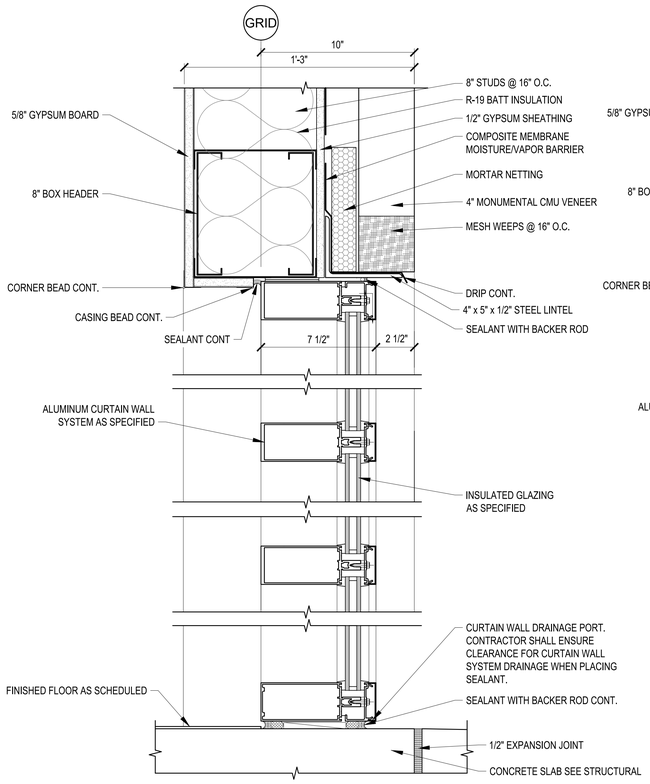

HEAD & SILL @ GLAZING

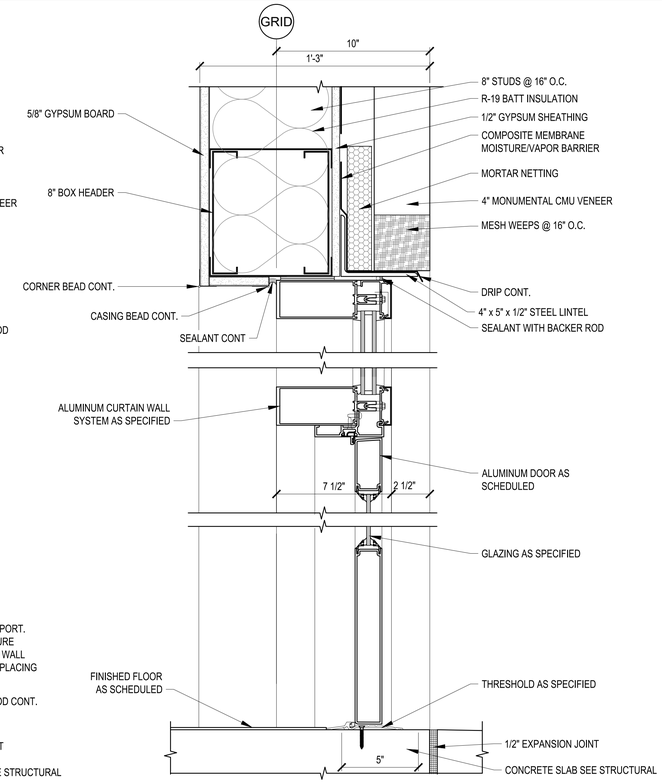

HEAD & SILL @ DOOR

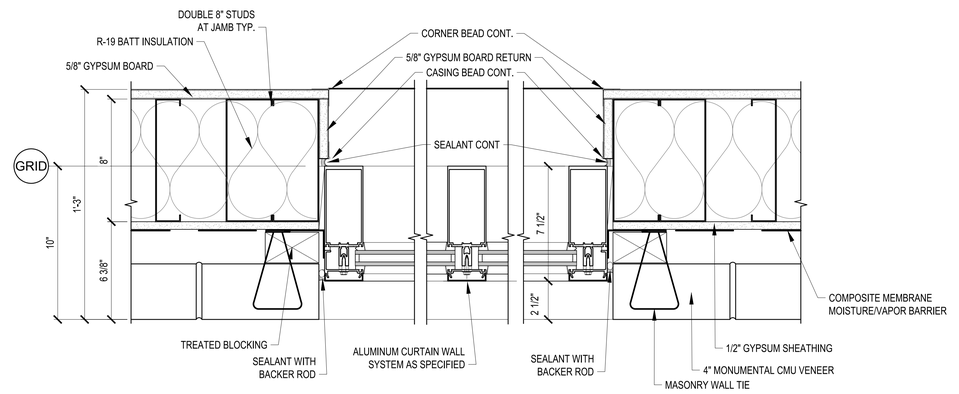

JAMB @ TRANSOM

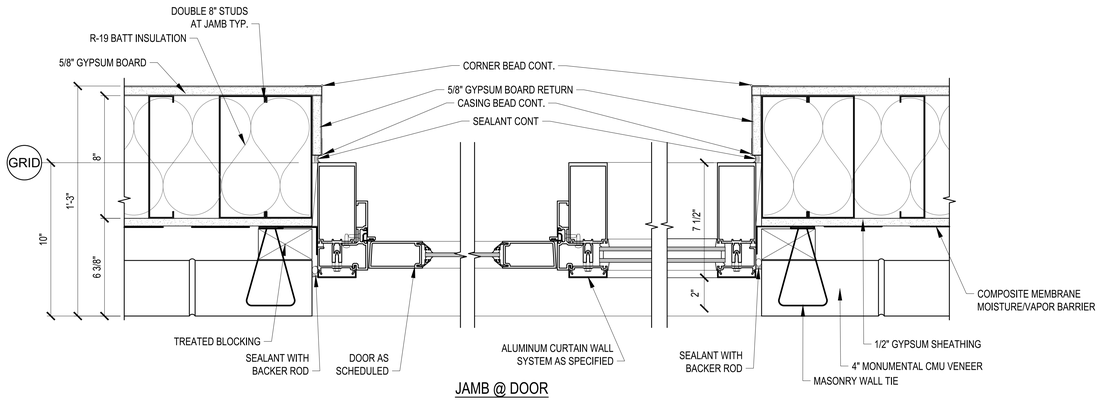

JAMB @ DOOR

1 A-805 CURTIAN WALL SYSTEM DETAIL

SCALE: 3"=1'-0"

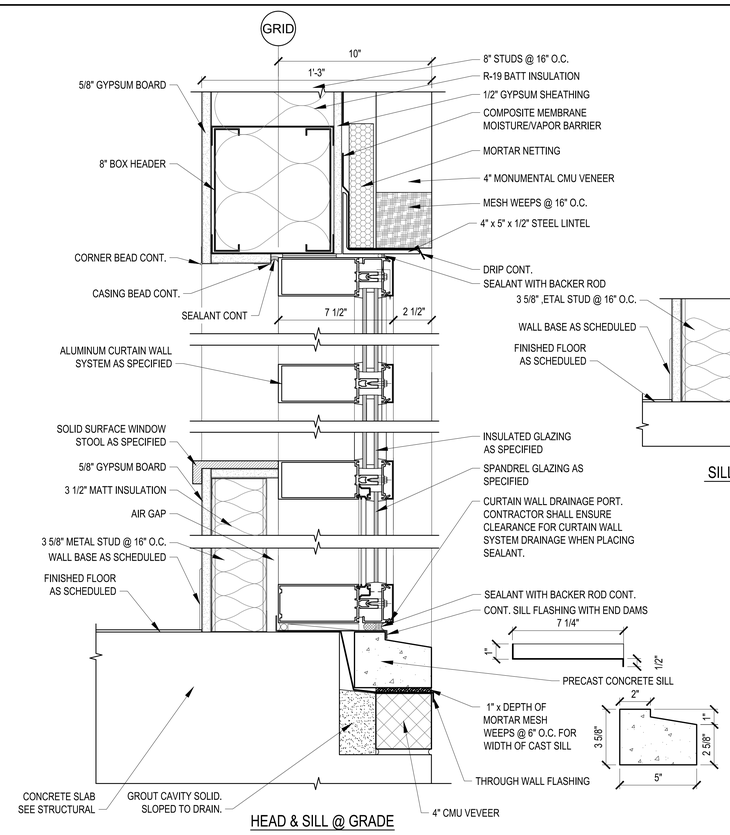

HEAD & SILL @ GRADE

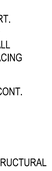

SILL @ COVERED PORCH

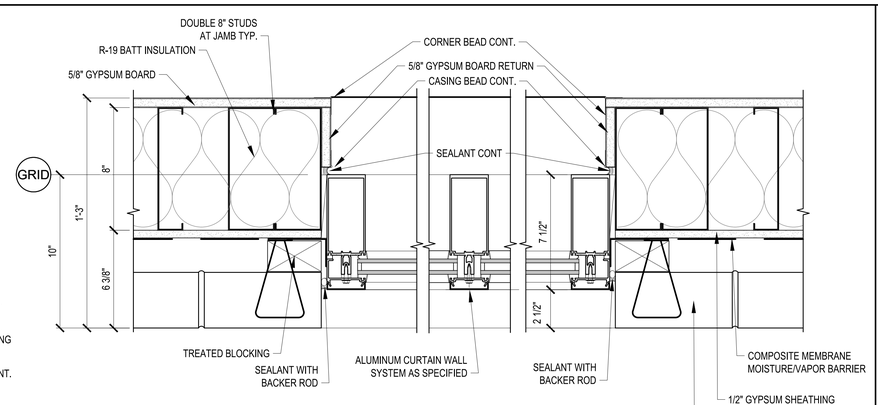

JAMB @ GLAZING

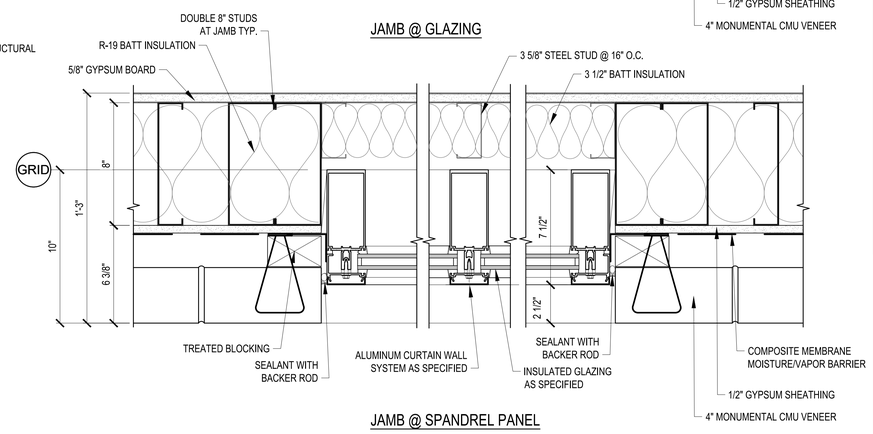

JAMB @ SPANDREL PANEL

2 A-805 CURTIAN WALL SYSTEM DETAIL

SCALE: 3"=1'-0"

0 3" 6" 1'

SCALE: 3"=1'-0"

REGISTERED ARCHITECT — Wade Earl Henry — 2515 — Greenwood, MS — STATE OF MISSISSIPPI

NO.	DATE	BY	DESCRIPTION

REVISIONS

Johnson M'Adams PPR P.A. ARCHITECTS/ENGINEERS PLANNING SURVEYING ENVIRONMENT P.O. BOX 913, GREENWOOD, MISSISSIPPI (662) 455-6943

USDA Agricultural Research Service

USDA AGRICULTURAL RESEARCH SERVICE
SUGARCANE RESEARCH LABORATORY
HOUMA, LOUISIANA

EXTERIOR WINDOW DETAILS

A-E FIRM	USDA
PROJECT MANAGER	EPM
REH	WN
DESIGNER	PPM
JLF	XXX
CHECKED BY	SAFETY & HEALTH
DRL	CM
JOB #	REAL PROPERTY
5825	JS

PROJECT NO. XXX
DATE 05/20/2026

AGRICULTURAL RESEARCH SERVICE
FACILITIES ENGINEERING BRANCH
5106 SUNNYSIDE AVENUE
BELTSVILLE, MD 20705-5100

SHEET A-805
78 OF 176

C:\Users\MJONAE~1\AppData\Local\Temp\AcPublish_28588\A805.dwg
May 20, 2026 - 8:53am

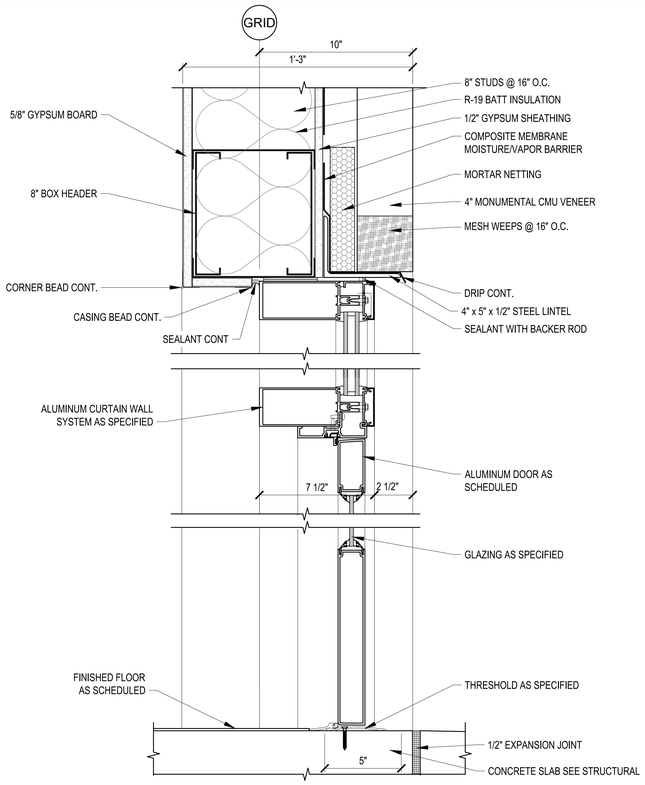

HEAD & SILL @ DOOR

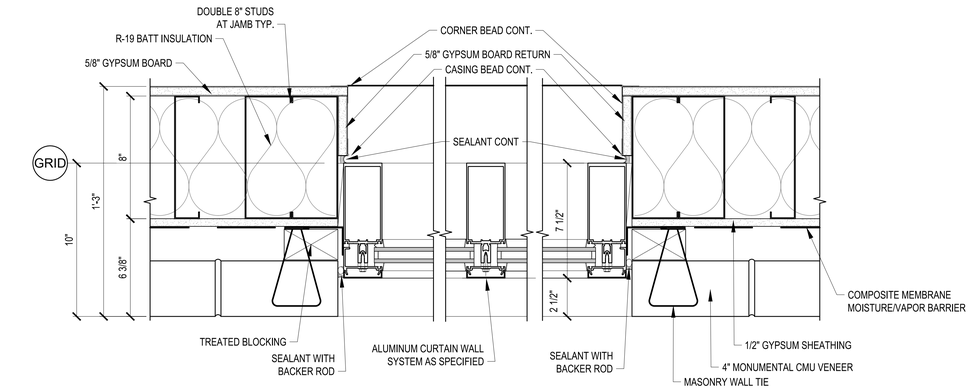

JAMB @ TRANSOM

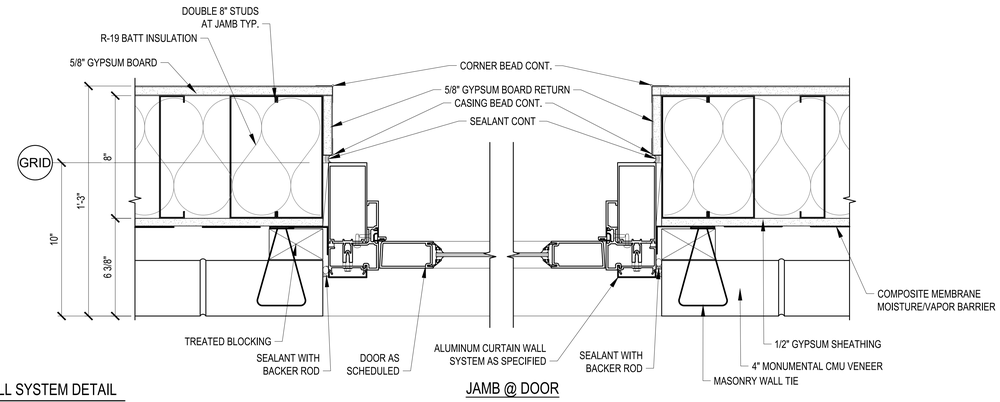

JAMB @ DOOR

1 A-806 CURTIAN WALL SYSTEM DETAIL

SCALE: 3"=1'-0"

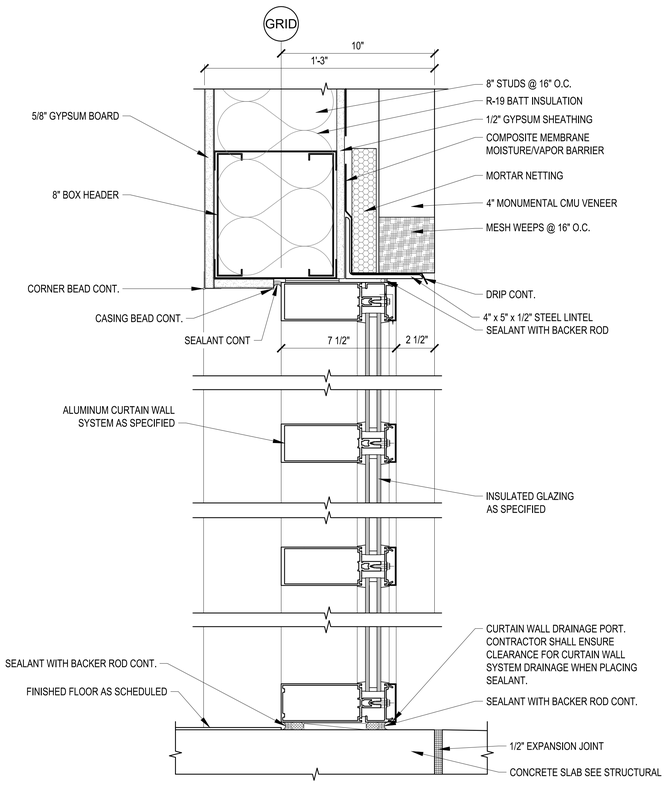

HEAD & SILL

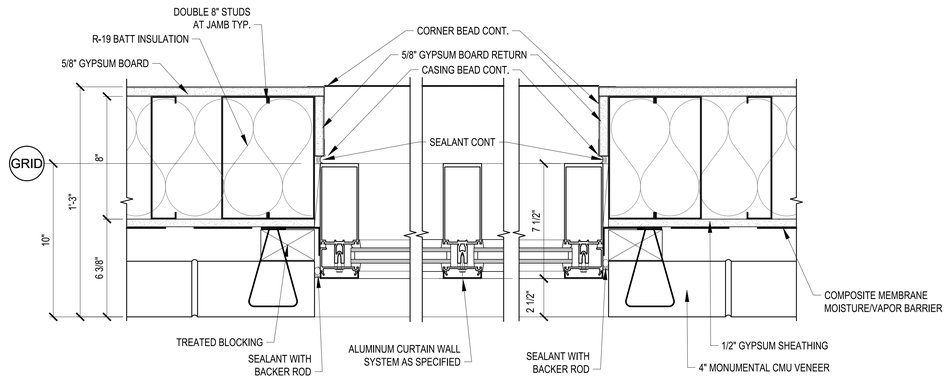

JAMB

2 A-806 CURTIAN WALL SYSTEM DETAIL

SCALE: 3"=1'-0"

0 3" 6" 1'

SCALE: 3"=1'-0"

Johnson M'Adams PA
ARCHITECTS/ENGINEERS PLANNING SURVEYING ENVIRONMENT
P.O. BOX 513, GREENWOOD, MISSISSIPPI - (662) 455-6943

NO.	DATE	BY	DESCRIPTION

REVISIONS

USDA Agricultural Research Service

USDA AGRICULTURAL RESEARCH SERVICE
SUGARCANE RESEARCH LABORATORY
HOUMA, LOUISIANA

EXTERIOR WINDOW DETAILS

A-E FIRM	USDA
PROJECT MANAGER	EPM
REH	WN
DESIGNER	PPM
JLF	XXX
CHECKED BY	SAFETY & HEALTH
DRL	CM
JOB #	REAL PROPERTY
5825	JS

PROJECT NO. XXX
DATE 05/20/2026

AGRICULTURAL RESEARCH SERVICE
FACILITIES ENGINEERING BRANCH
5106 SUNNYSIDE AVENUE
BELTSVILLE, MD 20705-5100

SHEET A-806

REGISTERED ARCHITECT Robin Earl Henry 2515 Greenwood, MS STATE OF MISSISSIPPI

C:\Users\MJOHAE~1\AppData\Local\Temp\AcPublish_28588\A806.dwg
May 20, 2026 - 8:53am

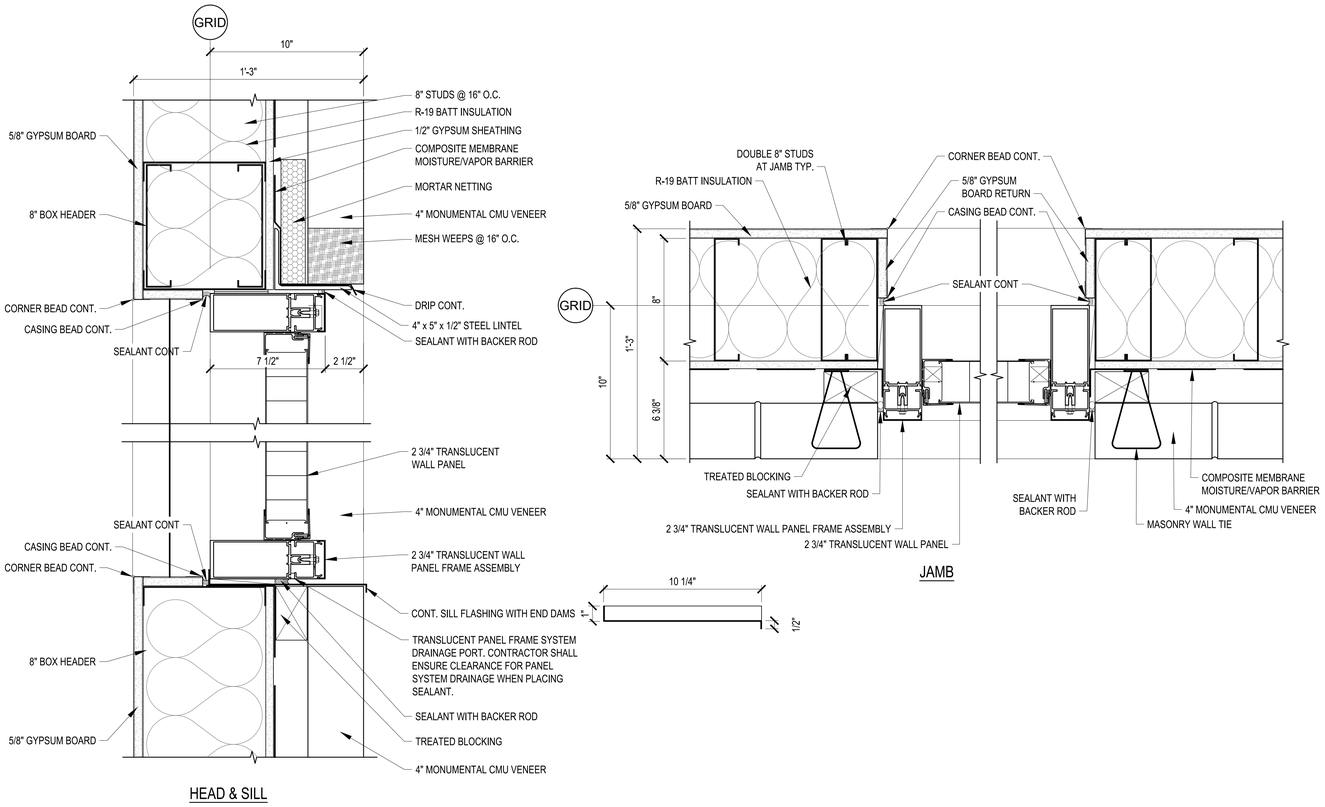

1 A-807 TRANSLUCENT PANEL DETAIL
SCALE: 3"=1'-0"

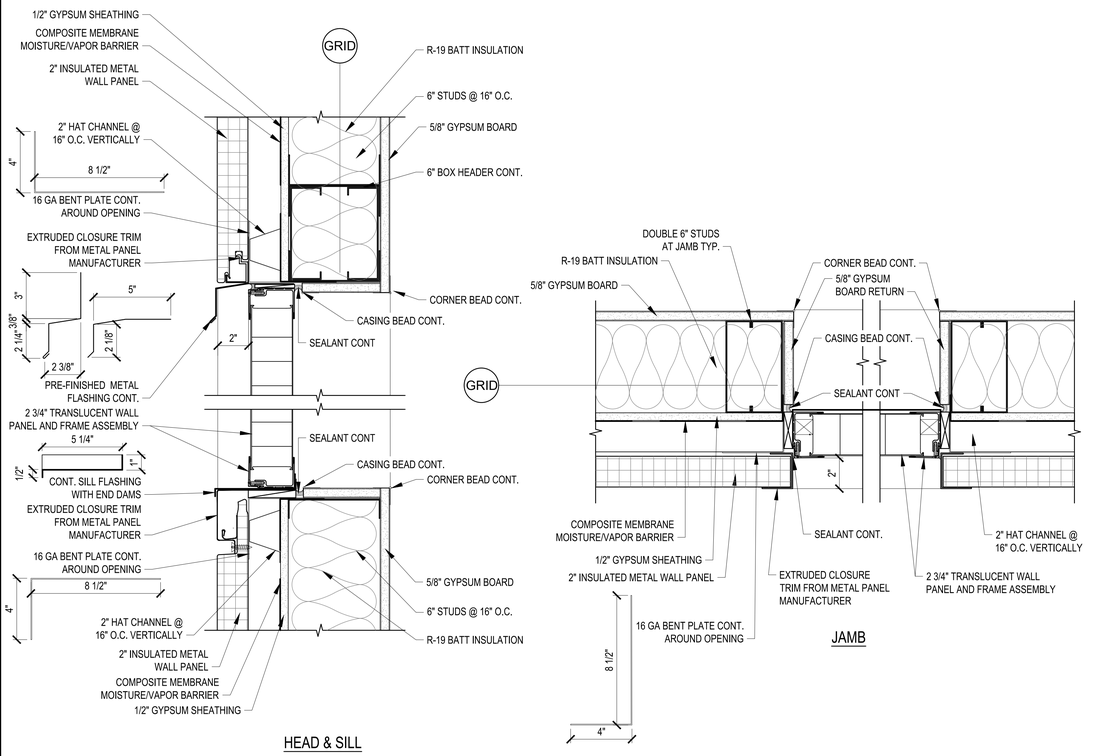

2 A-807 TRANSLUCENT PANEL DETAIL
SCALE: 3"=1'-0"

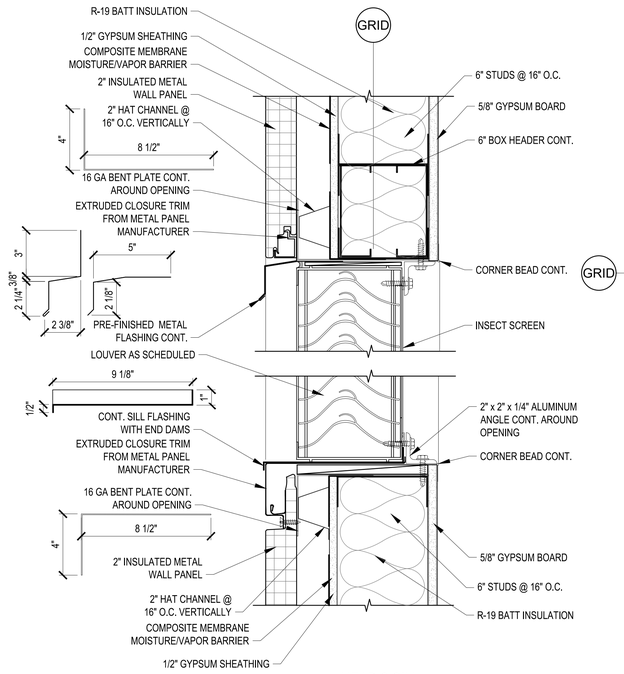

3 A-807 LOUVER DETAIL
SCALE: 3"=1'-0"

NOTE:
1. ALL WOOD SHALL BE PRESERVATIVE TREATED.
2. SEE MECHANICAL DRAWINGS FOR ADDITIONAL INFORMATION REGARDING LOUVERS.

REGISTERED ARCHITECT
Robin Earl Henry
2515
Commission No.
STATE OF MISSISSIPPI

0 3" 6" 1'
SCALE: 3"=1'-0"

NO.	DATE	BY	DESCRIPTION

REVISIONS

Jones Johnson McAdams PSM P.A.
PROJECTS/DESIGN/ENG PLANNING SURVEYING MANAGEMENT
P.O. BOX 6 S. GREENWOOD, MISSISSIPPI (662) 455-6443

USDA Agricultural Research Service

USDA AGRICULTURAL RESEARCH SERVICE
SUGARCANE RESEARCH LABORATORY
HOUMA, LOUISIANA

EXTERIOR WINDOW AND LOUVER DETAILS

A-E FIRM	USDA
PROJECT MANAGER	REH
EPM	WN
DESIGNER	JLF
PPM	XXX
CHECKED BY	DRL
SAFETY & HEALTH	CM
JOB #	5825
REAL PROPERTY	JS
PROJECT NO.	XXX
DATE	05/20/2026

AGRICULTURAL RESEARCH SERVICE
FACILITIES ENGINEERING BRANCH
5106 SUNNYSIDE AVENUE
BELTSVILLE, MD 20705-5100

SHEET A-807
80 OF 176

C:\Users\MICHAE~1\AppData\Local\Temp\AcPublish_28588\A807.dwg
May 20, 2026 - 8:53am

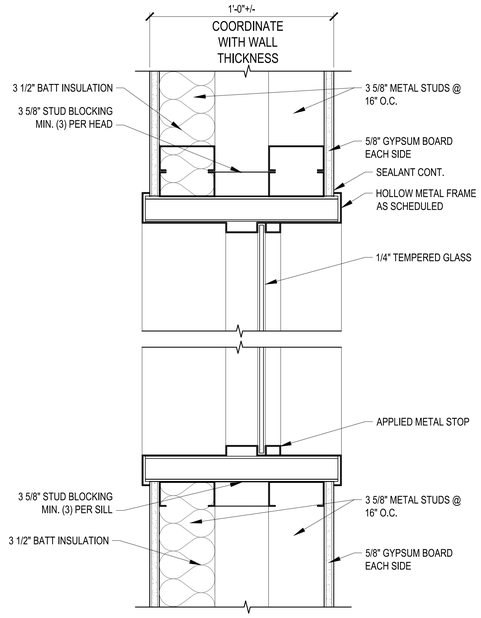

HEAD / SILL

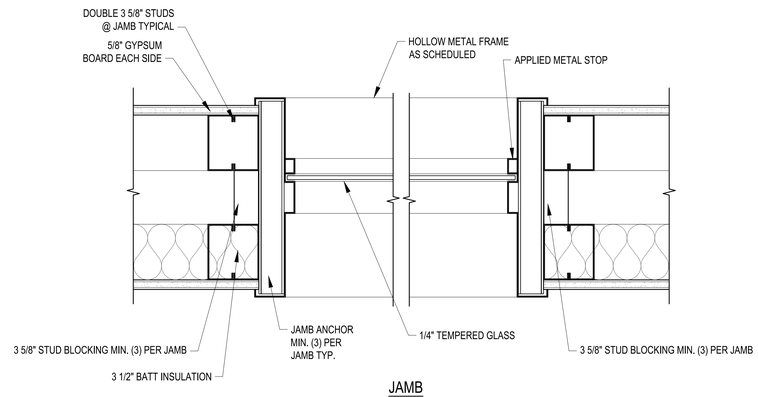

JAMB

1 A-808 INTERIOR WINDOW DETAIL
SCALE: 3"=1'-0"

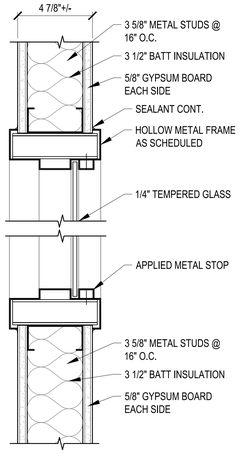

HEAD / SILL

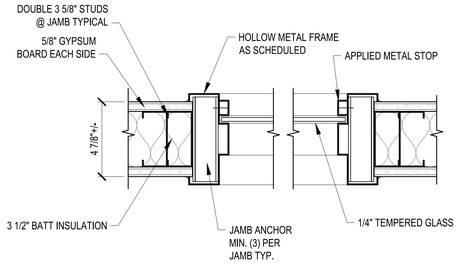

JAMB

2 A-808 INTERIOR WINDOW DETAIL
SCALE: 3"=1'-0"

0 3" 6" 1'

SCALE: 3"=1'-0"

C:\Users\JMCHAE~1\AppData\Local\Temp\AcPublish_28568\A808.dwg
May 20, 2026 - 8:53am

Johnson McAdams PLLC
ARCHITECTS/ENGINEERS PLANNERS SURVEYORS Mississippi
P.O. BOX 513, GREENWOOD, MISSISSIPPI - (662) 455-4443

NO.	DATE	BY	DESCRIPTION

REVISIONS

USDA Agricultural Research Service

USDA AGRICULTURAL RESEARCH SERVICE
SUGARCANE RESEARCH LABORATORY
HOUMA, LOUISIANA

INTERIOR WINDOW DETAILS

A-E FIRM	USDA
PROJECT MANAGER	EPM
REH	WN
DESIGNER	PPM
JLF	XXX
CHECKED BY	SAFETY & HEALTH
DRL	CM
JOB #	REAL PROPERTY
5825	JS

PROJECT NO. XXX
DATE 05/20/2026

AGRICULTURAL RESEARCH SERVICE
FACILITIES ENGINEERING BRANCH
5106 SUNNYSIDE AVENUE
BELTSVILLE, MD 20705-5100

SHEET A-808
81 OF 176

REGISTERED ARCHITECT
John Earl Henry, Jr.
2515
Greenwood, MS
STATE OF MISSISSIPPI

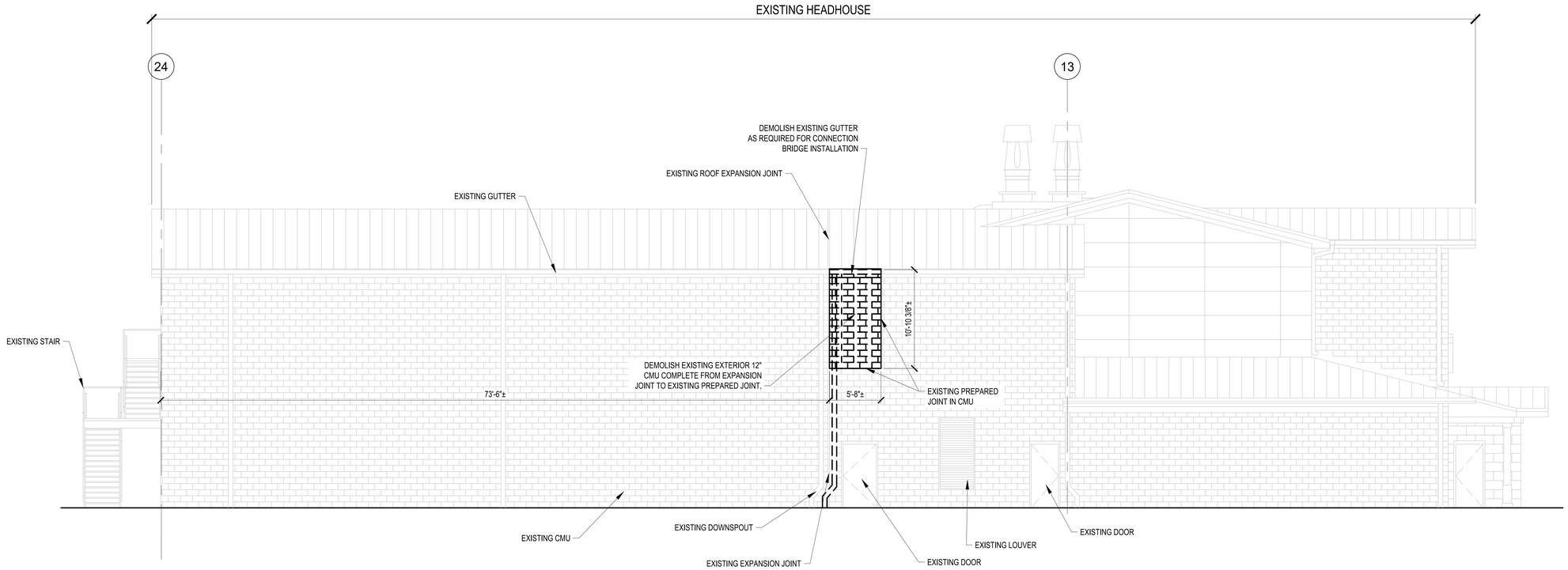

GENERAL NOTE

1. CONTRACTOR SHALL COORDINATE LAYOUT WITH THE LOCATION OF THE CONNECTING BRIDGE BETWEEN THE EXISTING HEADHOUSE AND THE NEW LABORATORY STRUCTURE. A SECTION OF THE EXISTING HEADHOUSE WALL LOCATED APPROXIMATELY 73' FROM THE NORTHEAST CORNER ON THE SECOND FLOOR WAS DESIGNED TO BE REMOVED TO ACCOMMODATE THE NEW LABORATORY STRUCTURE. FIELD LOCATE AND VERIFY PREPARED OPENING.

1 / AD-101 EXISTING HEADHOUSE
NORTH ELEVATION: DEMOLITION
SCALE: 3/16"=1'-0"

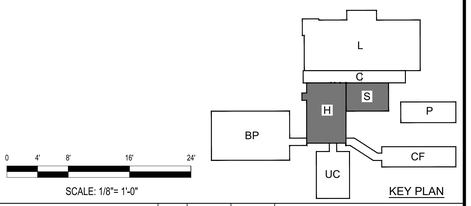

0 4' 8' 16' 24'
SCALE: 1/8"= 1'-0"

KEY PLAN

NO.	DATE	BY	DESCRIPTION

REVISIONS

Johnson McAdams
ARCHITECTS/ENGINEERS PLANNERS SURVEYING ENVIRONMENT
P.O. BOX 515, GREENWOOD, MISSISSIPPI - (662) 455-6943

USDA Agricultural Research Service

USDA AGRICULTURAL RESEARCH SERVICE
SUGARCANE RESEARCH LABORATORY
HOUMA, LOUISIANA

EXISTING HEADHOUSE
NORTH ELEVATION: DEMOLITION

A-E FIRM	USDA
PROJECT MANAGER REH	EPM WN
DESIGNER JLF	PPM XXX
CHECKED BY DRL	SAFETY & HEALTH CM
JOB # 5825	REAL PROPERTY JS

PROJECT NO. XXX
DATE 05/20/2026

AGRICULTURAL RESEARCH SERVICE
FACILITIES ENGINEERING BRANCH
5106 SUNNYSIDE AVENUE
BELTSVILLE, MD 20705-5100

SHEET AD-101
34 OF 176

REGISTERED ARCHITECT
Robin Earl Henry
2515
Greenwood, MS
STATE OF MISSISSIPPI

C:\Users\MICHAE~1\AppData\Local\Temp\AcPublish_28588\AD101.dwg
May 20, 2026 - 8:33am

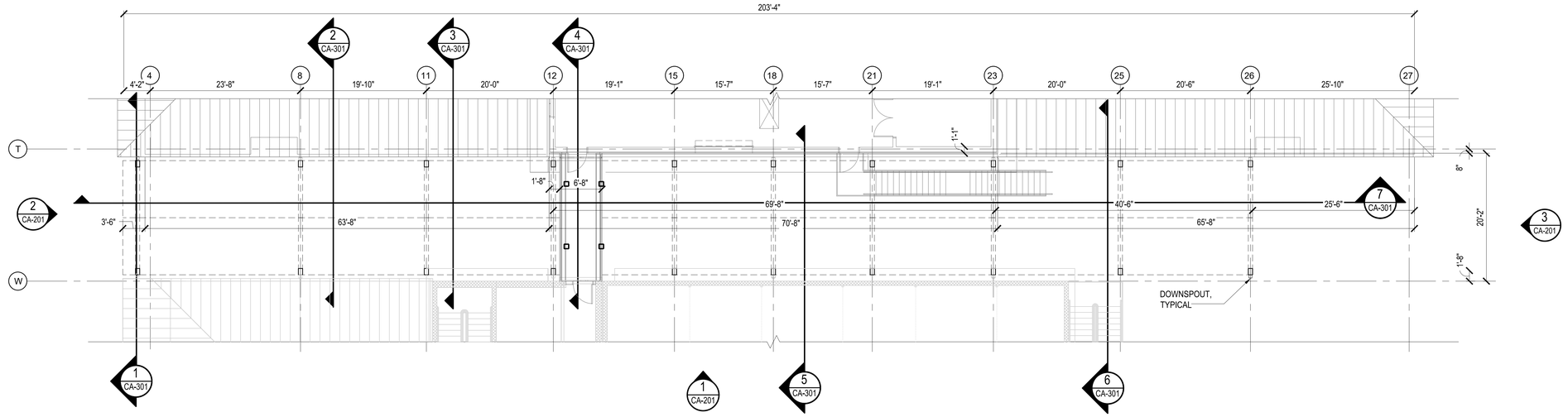

1 CA-101 BID OPTION #1
OVERALL SECOND FLOOR PLAN
SCALE: 1/8"=1'-0"

PLAN NORTH TRUE NORTH

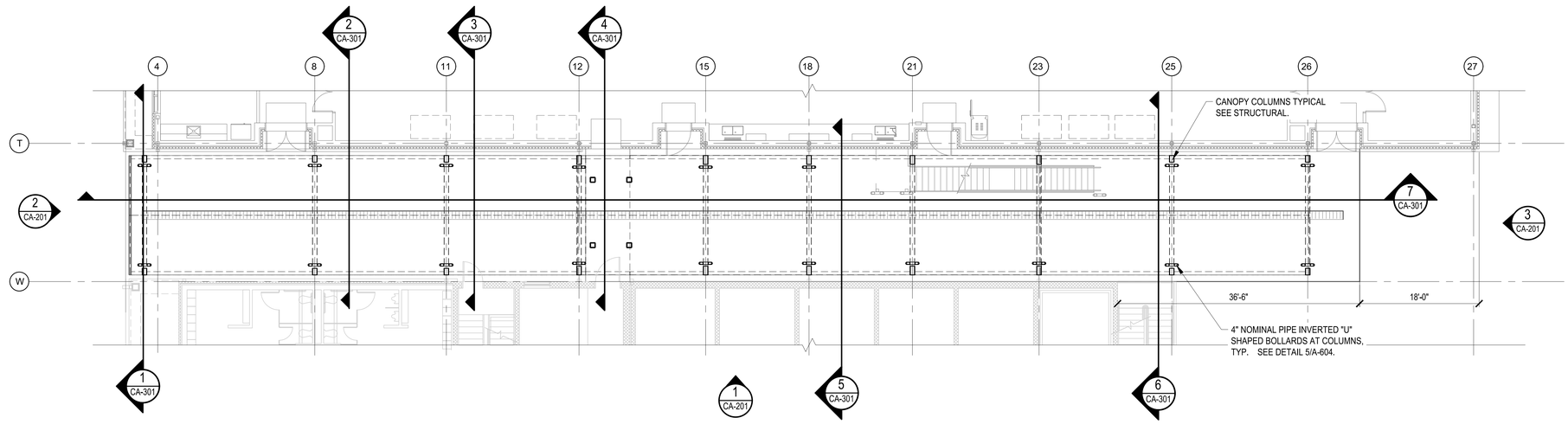

2 CA-101 BID OPTION #1
OVERALL FIRST FLOOR PLAN
SCALE: 1/8"=1'-0"

PLAN NORTH TRUE NORTH

GENERAL NOTE

1. ALL PLAN DIMENSIONS ARE FROM FACE OF MASONRY OR FROM COLUMN GRID LINE.

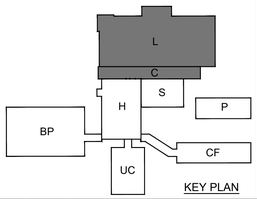

KEY PLAN

0 4' 8' 16' 24'
SCALE: 1/8"= 1'-0"

Johnson, Mirmiran & Thompson, Inc. ARCHITECTS/ENGINEERS PLANNERS SURVEYING ENVIRONMENT
P.O. BOX 313, GREENWOOD, MISSISSIPPI (662) 455-5443

NO.	DATE	BY	DESCRIPTION
			REVISIONS

USDA Agricultural Research Service

USDA AGRICULTURAL RESEARCH SERVICE
SUGARCANE RESEARCH LABORATORY
HOUMA, LOUISIANA

BID OPTION #1
FIRST FLOOR AND SECOND FLOOR PLANS

A-E FIRM	USDA
PROJECT MANAGER	REH
EPM	WN
DESIGNER	JLF
PPM	XXX
CHECKED BY	DRL
SAFETY & HEALTH	CM
JOB #	5825
REAL PROPERTY	JS

PROJECT NO. XXX
DATE 05/20/2026

AGRICULTURAL RESEARCH SERVICE
FACILITIES ENGINEERING BRANCH
5106 SUNNYSIDE AVENUE
BELTSVILLE, MD 20705-5100

SHEET CA-101
82 OF 176

REGISTERED ARCHITECT Robb Earl Henry 2515 Greenwood, MS STATE OF MISSISSIPPI

L:\Users\MJONAS~1\AppData\Local\Temp\AcPublish_28588\CA101.dwg
May 20, 2026 - 8:53am

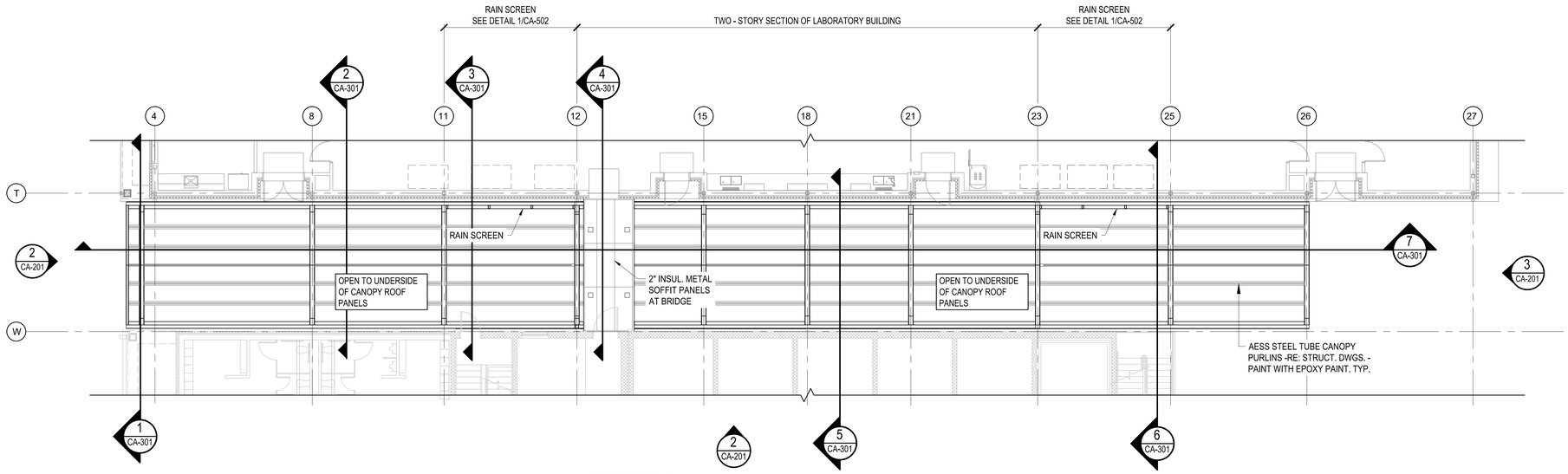

BID OPTION #1
1 CA-102 FIRST FLOOR REFLECTED CEILING PLAN
SCALE: 1/8"=1'-0"
PLAN NORTH TRUE NORTH

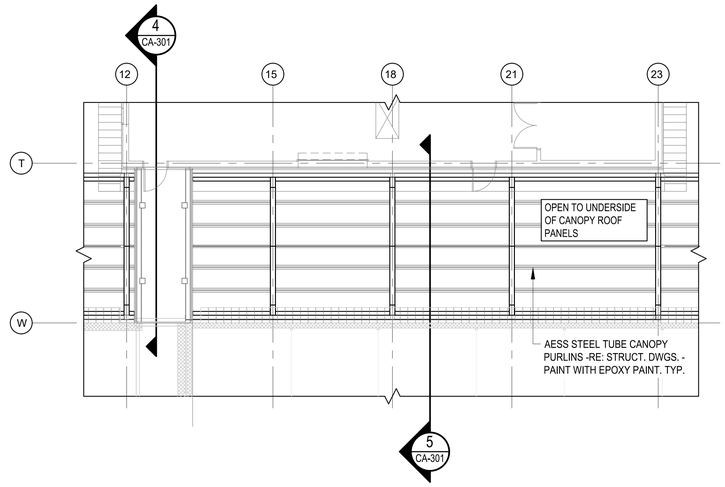

BID OPTION #1
2 CA-102 SECOND FLOOR REFLECTED CEILING PLAN
SCALE: 1/8"=1'-0"
PLAN NORTH TRUE NORTH

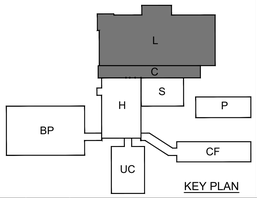

KEY PLAN

0 4' 8' 16' 24'
SCALE: 1/8"= 1'-0"

NO.	DATE	BY	DESCRIPTION

REVISIONS

A-E FIRM	USDA
PROJECT MANAGER REH	EPM WN
DESIGNER JLF	PPM XXX
CHECKED BY DRL	SAFETY & HEALTH CM
JOB # 5825	REAL PROPERTY JS

USDA Agricultural Research Service

USDA AGRICULTURAL RESEARCH SERVICE
SUGARCANE RESEARCH LABORATORY
HOUMA, LOUISIANA

BID OPTION #1 FIRST AND SECOND FLOOR REFLECTED CEILING PLANS

PROJECT NO. XXX
DATE 05/20/2026

AGRICULTURAL RESEARCH SERVICE
FACILITIES ENGINEERING BRANCH
5106 SUNNYSIDE AVENUE
BELTSVILLE, MD 20705-5100

SHEET CA-102
83 OF 176

REGISTERED ARCHITECT
Robin Earl Henry
2515
Greenwood, MS
STATE OF MISSISSIPPI

C:\Users\MICHAEL~1\AppData\Local\Temp\AcPublish_28588\CA102.dwg
May 20, 2026 - 8:33am

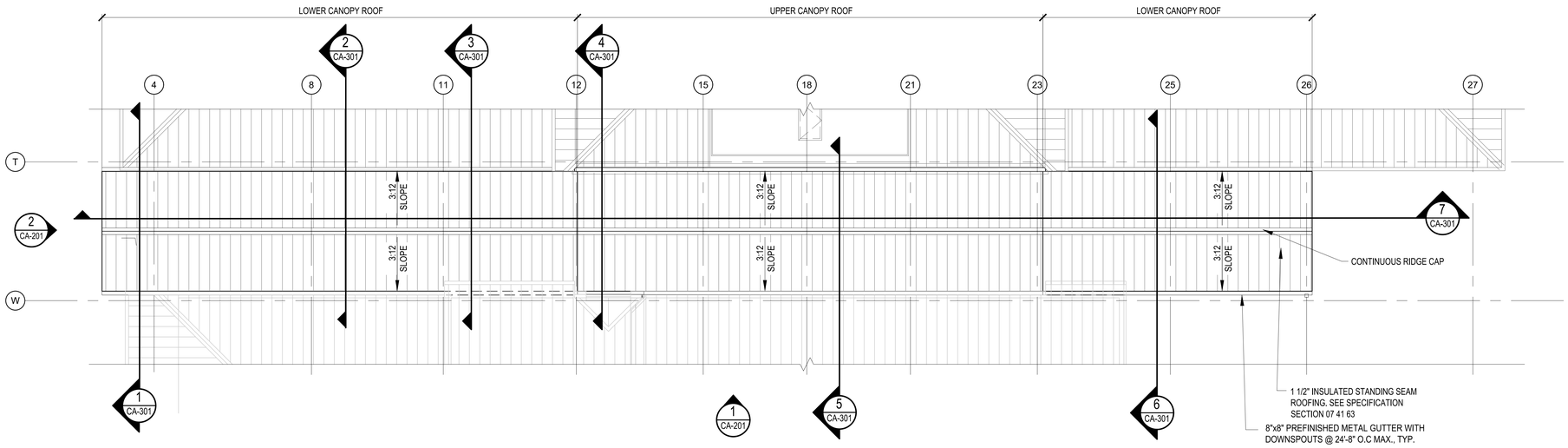

1 CA-103 BID OPTION #1 ROOF PLAN

SCALE: 1/8"=1'-0"

PLAN NORTH

TRUE NORTH

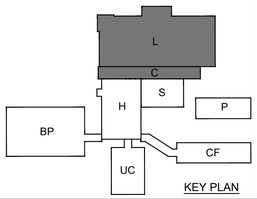

KEY PLAN

0 4' 8' 16' 24'

SCALE: 1/8"= 1'-0"

Johnson Mirmiran Adams PSC
ARCHITECTS/ENGINEERS PLANNERS SURVEYING MANAGEMENT
P.O. BOX 313 GREENWOOD, MISSISSIPPI (662) 455-6441

NO.	DATE	BY	DESCRIPTION

REVISIONS

USDA Agricultural Research Service

USDA AGRICULTURAL RESEARCH SERVICE
SUGARCANE RESEARCH LABORATORY
HOUMA, LOUISIANA

BID OPTION #1
ROOF PLAN

A-E FIRM	USDA
PROJECT MANAGER	REH
DESIGNER	JLF
CHECKED BY	DRL
JOB #	5825
EPM	WN
PPM	XXX
SAFETY & HEALTH	CM
REAL PROPERTY	JS

REGISTERED ARCHITECT
Robert Earl Henry
2515
Greenwood, MS
STATE OF MISSISSIPPI

PROJECT NO.	XXX	AGRICULTURAL RESEARCH SERVICE FACILITIES ENGINEERING BRANCH 5106 SUNNYSIDE AVENUE BELTSVILLE, MD 20705-5100
DATE	05/20/2026	

SHEET CA-103

C:\Users\MROWE~1\AppData\Local\Temp\AcPublish_28588\CA103.dwg
May 20, 2026 - 8:53am

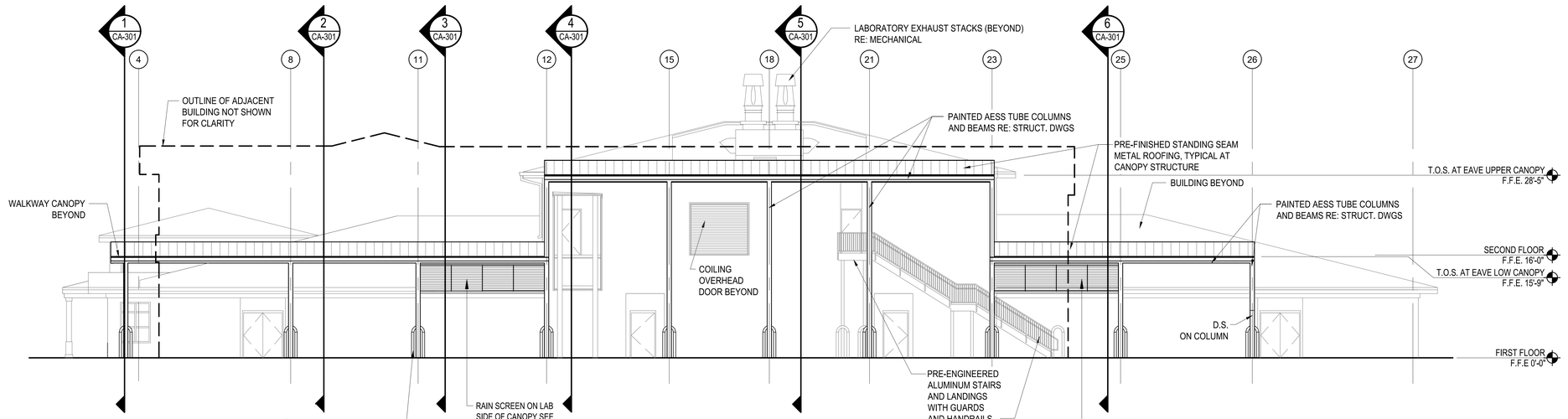

1 CA-104 BID OPTION #1 SOUTH ELEVATION
SCALE: 1/8"=1'-0"

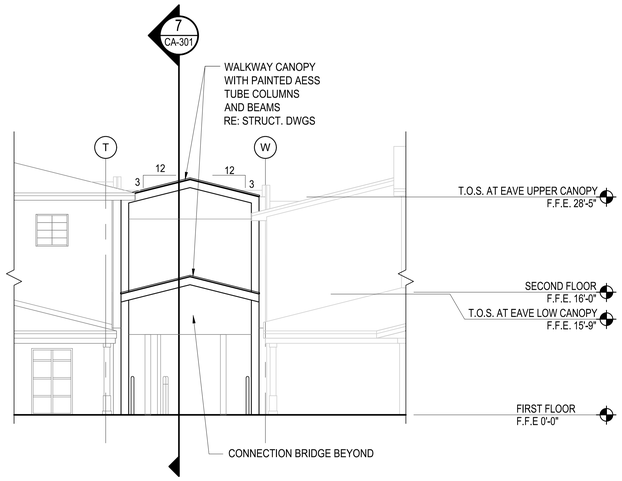

2 CA-104 BID OPTION #1 WEST ELEVATION
SCALE: 1/8"=1'-0"

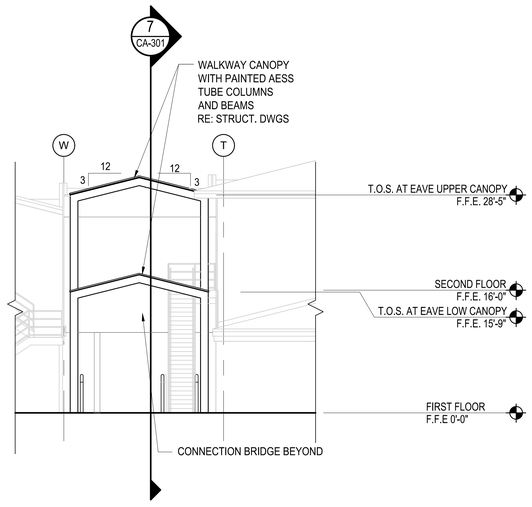

3 CA-104 BID OPTION #1 EAST ELEVATION
SCALE: 1/8"=1'-0"

0 4' 8' 16' 24'
SCALE: 1/8"= 1'-0"

NO.	DATE	BY	DESCRIPTION

REVISIONS

Johnson McAdams
ARCHITECTS/ENGINEERS PLANNING SURVEYING MANAGEMENT
P.O. BOX 515, GREENWOOD, MISSISSIPPI 38930 (662) 455-4943

A-E FIRM	USDA
PROJECT MANAGER REH	EPM WN
DESIGNER JLF	PPM XXX
CHECKED BY DRL	SAFETY & HEALTH CM
JOB # 5825	REAL PROPERTY JS

USDA Agricultural Research Service

USDA AGRICULTURAL RESEARCH SERVICE
SUGARCANE RESEARCH LABORATORY
HOUMA, LOUISIANA

BID OPTION #1
EXTERIOR ELEVATIONS

PROJECT NO. XXX
DATE 05/14/2026

AGRICULTURAL RESEARCH SERVICE
FACILITIES ENGINEERING BRANCH
5106 SUNNYSIDE AVENUE
BELTSVILLE, MD 20705-5100

SHEET CA-201
85 OF 176

REGISTERED ARCHITECT
Robin Earl Henry
2515
Greenwood, MS
STATE OF MISSISSIPPI

C:\Users\MCHAE~1\AppData\Local\Temp\AcPublish_28588\CA201.dwg
May 20, 2026 - 8:33am

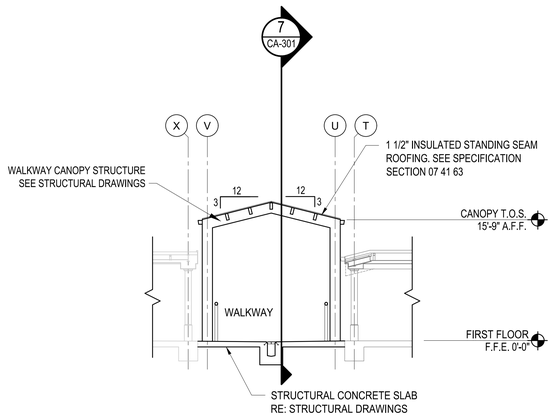

1 CA-301 BID OPTION #1 BUILDING SECTION
SCALE: 1/8"=1'-0"

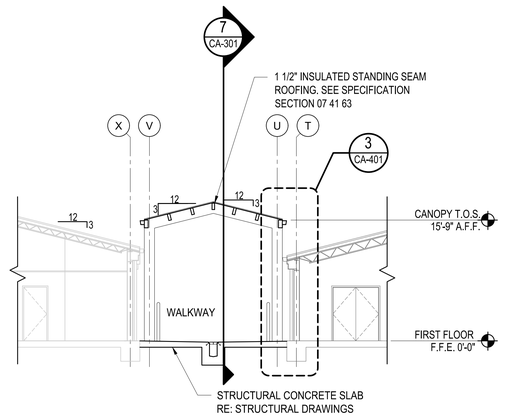

2 CA-301 BID OPTION #1 BUILDING SECTION
SCALE: 1/8"=1'-0"

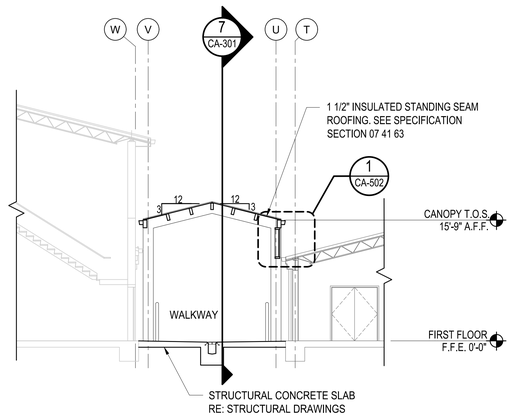

3 CA-301 BID OPTION #1 BUILDING SECTION
SCALE: 1/8"=1'-0"

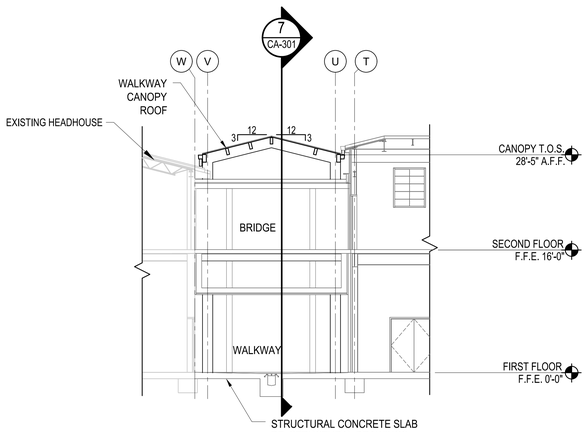

4 CA-301 BID OPTION #1 BUILDING SECTION
SCALE: 1/8"=1'-0"

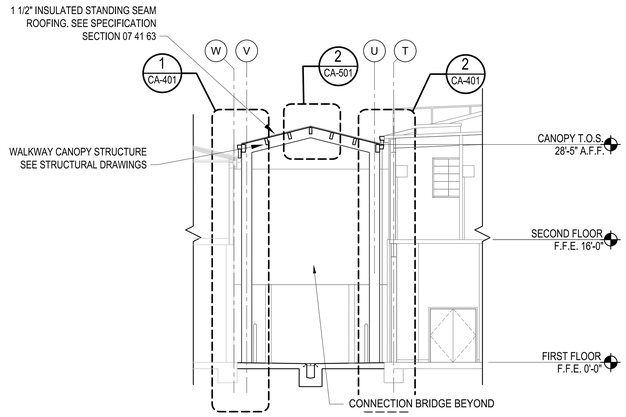

5 CA-301 BID OPTION #1 BUILDING SECTION
SCALE: 1/8"=1'-0"

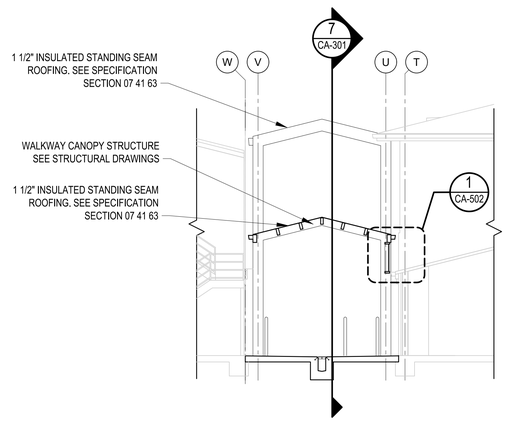

6 CA-301 BID OPTION #1 BUILDING SECTION
SCALE: 1/8"=1'-0"

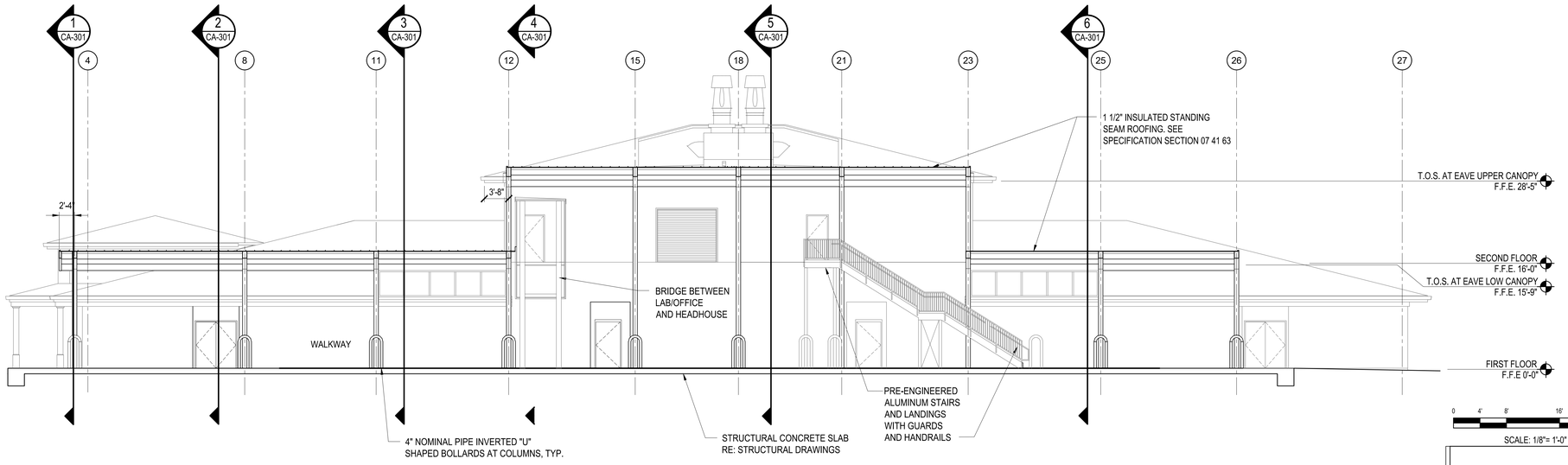

7 CA-301 BID OPTION #1 BUILDING SECTION
SCALE: 1/8"=1'-0"

0 4' 8' 16' 24'

SCALE: 1/8"= 1'-0"

C:\Users\MICHAE~1\AppData\Local\Temp\AcPublish_28588\CA301.dwg
May 20, 2026 - 8:53am

NO.	DATE	BY	DESCRIPTION

REVISIONS

The Johnson M'Adams FIRM P.A.
ARCHITECTS/ENGINEERS PLANNING SURVEYING ENVIRONMENT
P.O. BOX 513, GREENWOOD, MISSISSIPPI - (662) 455-6643

USDA Agricultural Research Service

USDA AGRICULTURAL RESEARCH SERVICE
SUGARCANE RESEARCH LABORATORY
HOUMA, LOUISIANA

BID OPTION #1
BUILDING SECTIONS

A-E FIRM	USDA
PROJECT MANAGER: REH	EPM: WN
DESIGNER: JLF	PPM: XXX
CHECKED BY: DRL	SAFETY & HEALTH: CM
JOB #: 5825	REAL PROPERTY: JS

PROJECT NO. XXX
DATE 05/20/2026

AGRICULTURAL RESEARCH SERVICE
FACILITIES ENGINEERING BRANCH
5106 SUNNYSIDE AVENUE
BELTSVILLE, MD 20705-5100

SHEET CA-301
86 OF 176

REGISTERED ARCHITECT
Robin Earl Henry
2515
Greenwood, MS
STATE OF MISSISSIPPI

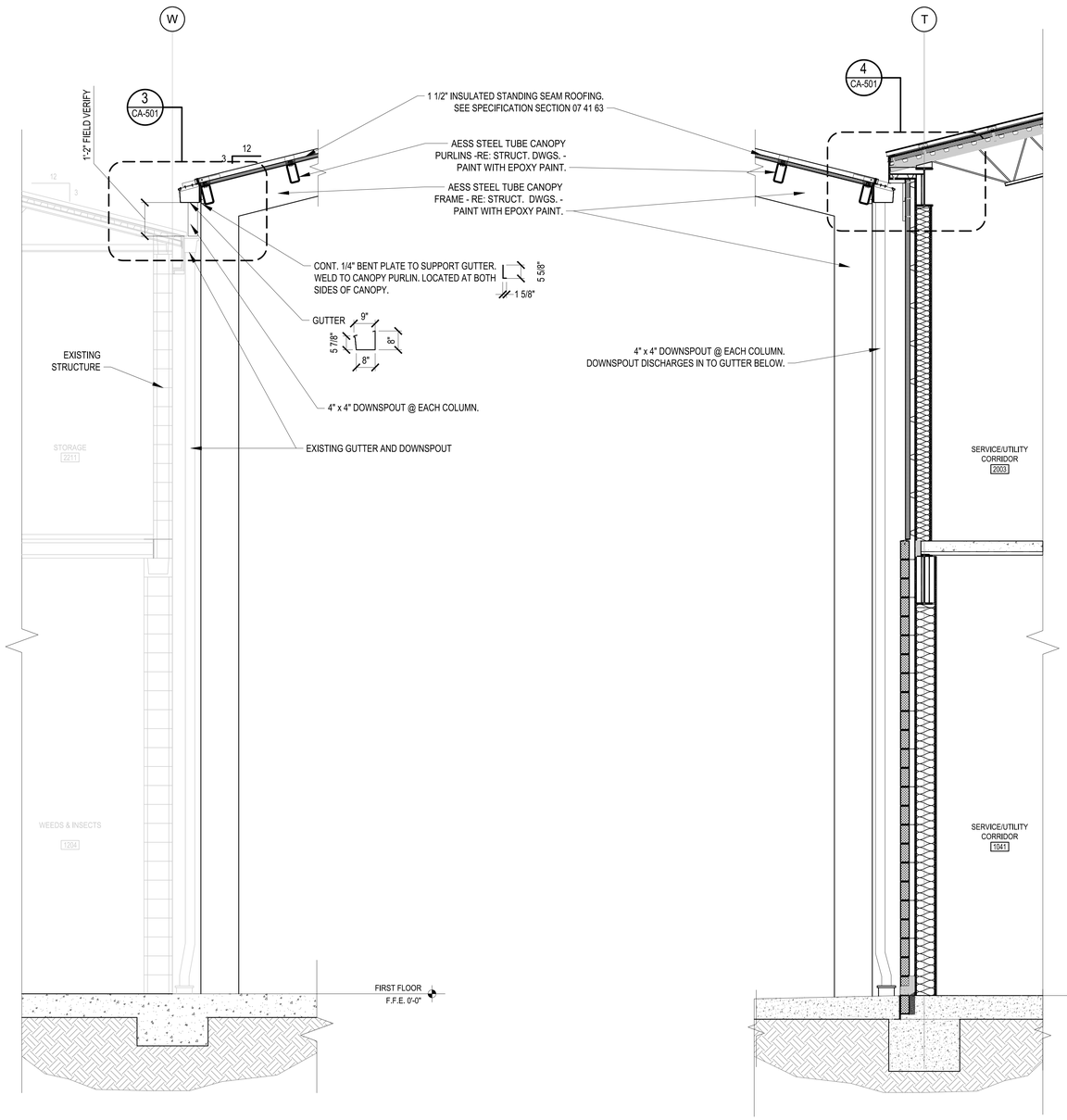

1 CA-401 BID OPTION #1 WALL SECTION
SCALE: 1/2"=1'-0"

2 CA-401 BID OPTION #1 WALL SECTION
SCALE: 1/2"=1'-0"

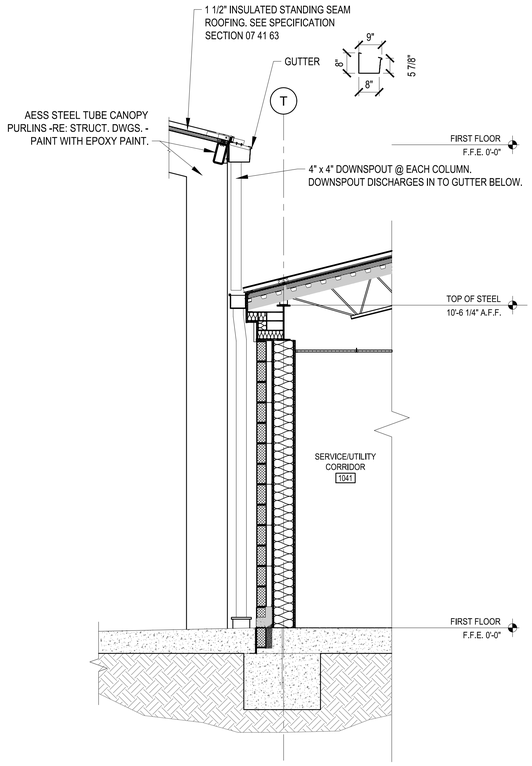

3 CA-401 BID OPTION #1 WALL SECTION
SCALE: 1/2"=1'-0"

REGISTERED ARCHITECT
Robin Earl Henry
2515
Greenwood, MS
STATE OF MISSISSIPPI

NO.	DATE	BY	DESCRIPTION

REVISIONS

Johnson McAdams
ARCHITECTS/ENGINEERS PLANNING SURVEYING MANAGEMENT
P.O. BOX 515, GREENWOOD, MISSISSIPPI 38935 (662) 455-6663

A-E FIRM	USDA
PROJECT MANAGER REH	EPM WN
DESIGNER JLF	PPM XXX
CHECKED BY DRL	SAFETY & HEALTH CM
JOB # 5825	REAL PROPERTY JS

USDA

USDA Agricultural Research Service

USDA AGRICULTURAL RESEARCH SERVICE
SUGARCANE RESEARCH LABORATORY
HOUMA, LOUISIANA

BID OPTION #1
WALL SECTIONS

PROJECT NO. XXX
DATE 05/20/2026

AGRICULTURAL RESEARCH SERVICE
FACILITIES ENGINEERING BRANCH
5106 SUNNYSIDE AVENUE
BELTSVILLE, MD 20705-5100

SHEET CA-401
87 OF 176

C:\Users\MCNAE~1\AppData\Local\Temp\AcPublish_28588\CA401.dwg
May 20, 2026 - 8:33am

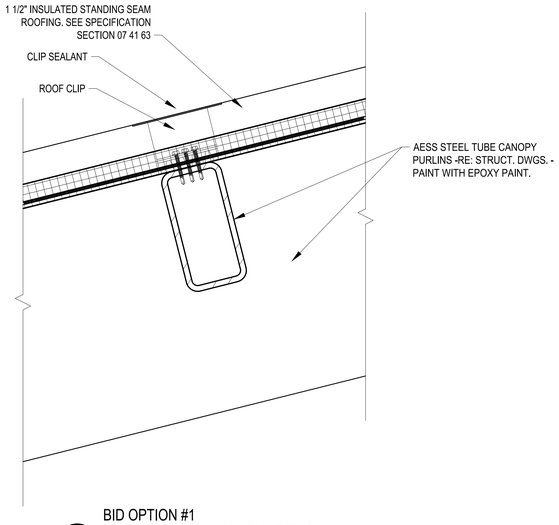

1 CA-501 BID OPTION #1
TYPICAL ROOF ASSEMBLY DETAIL
SCALE: 3"=1'-0"

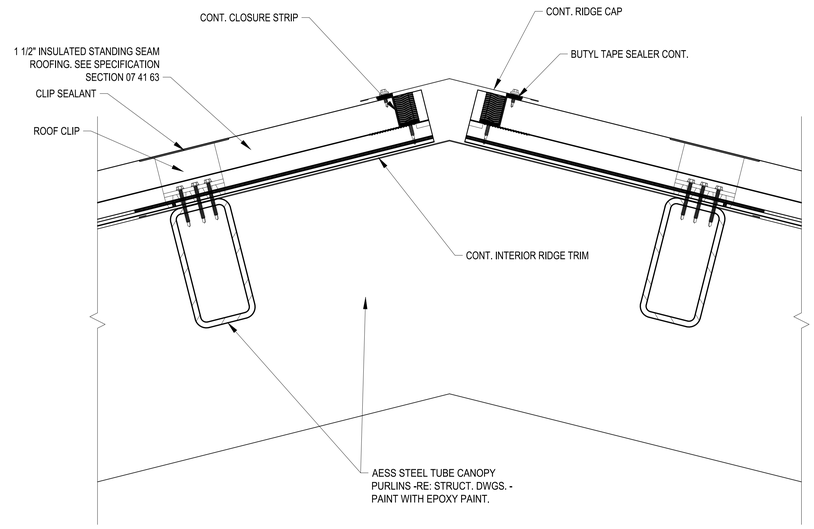

2 CA-501 BID OPTION #1 TYPICAL RIDGE DETAIL
SCALE: 3"=1'-0"

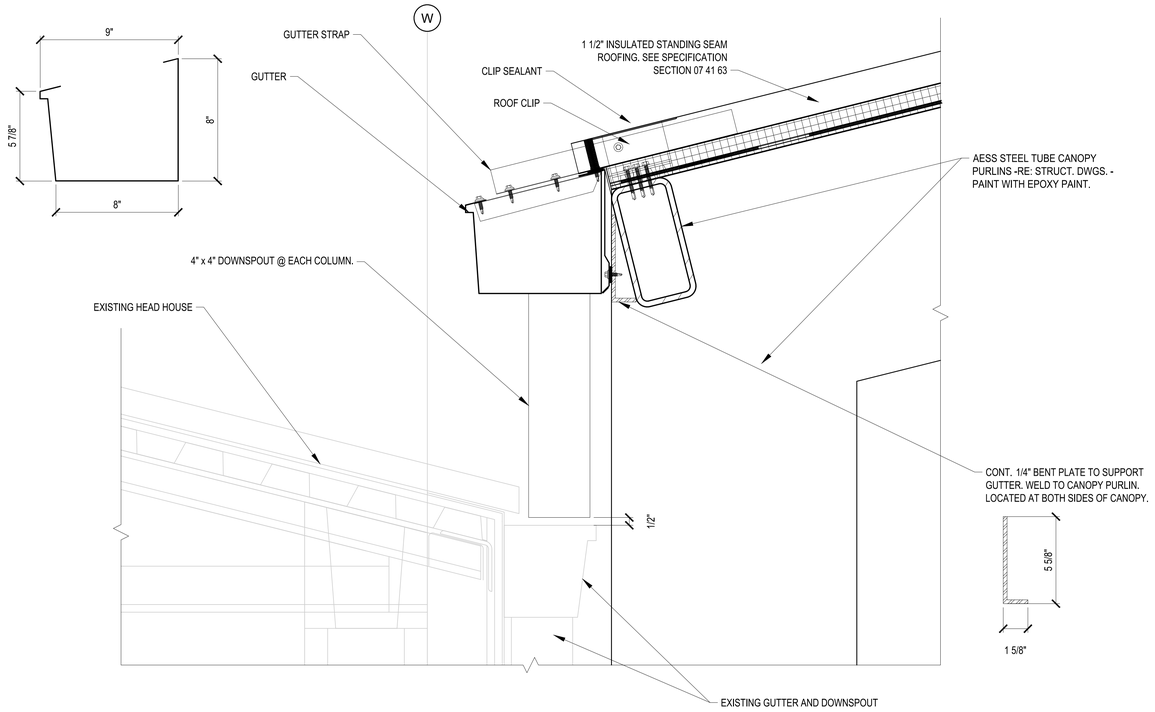

3 CA-501 BID OPTION #1
CANOPY GUTTER AT HEADHOUSE
SCALE: 3"=1'-0"

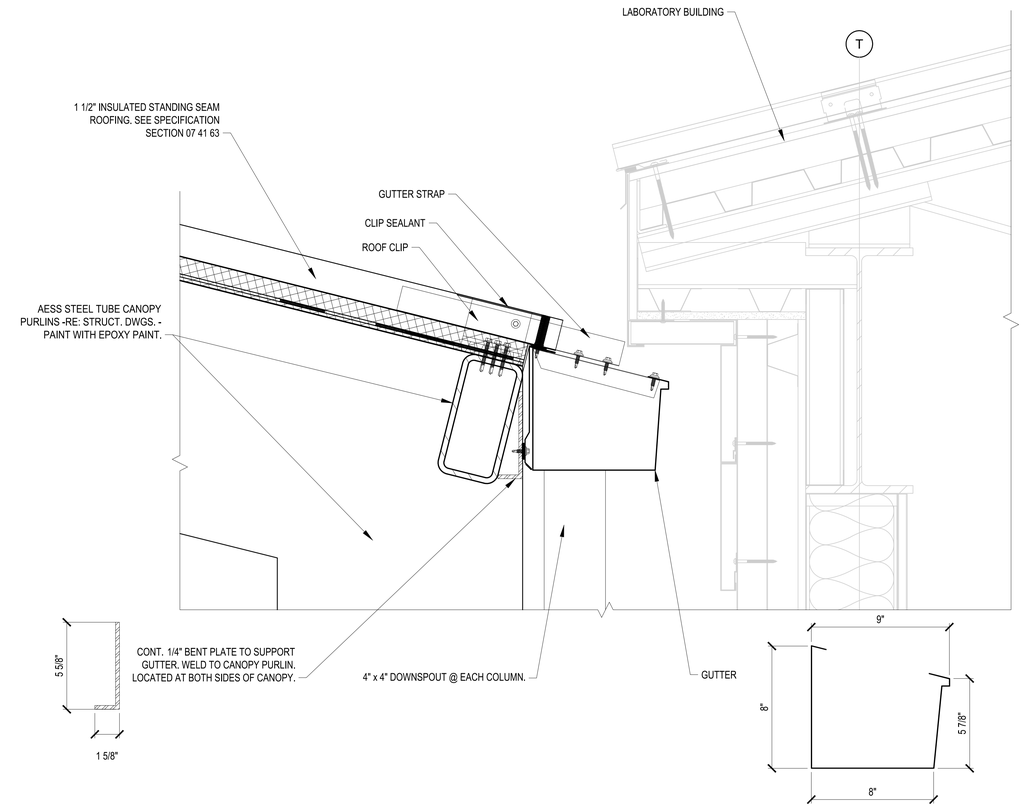

4 CA-501 BID OPTION #1
CANOPY GUTTER AT LABORATORY
SCALE: 3"=1'-0"

0 3" 6" 1'
SCALE: 3"=1'-0"

REGISTERED ARCHITECT
Robin Earl Henry
2515
Greenwood, MS
STATE OF MISSISSIPPI

NO.	DATE	BY	DESCRIPTION

REVISIONS

Johnson McAdams
ARCHITECTS/ENGINEERS PLANNING SURVEYING MANAGEMENT
P.O. BOX 515, GREENWOOD, MISSISSIPPI - (662) 455-4943

A-E FIRM	USDA
PROJECT MANAGER REH	EPM WN
DESIGNER JLF	PPM XXX
CHECKED BY DRL	SAFETY & HEALTH CM
JOB # 5825	REAL PROPERTY JS

USDA Agricultural Research Service

USDA AGRICULTURAL RESEARCH SERVICE
SUGARCANE RESEARCH LABORATORY
HOUMA, LOUISIANA

BID OPTION #1
ROOF DETAILS

PROJECT NO. XXX
DATE 05/20/2026

AGRICULTURAL RESEARCH SERVICE
FACILITIES ENGINEERING BRANCH
5106 SUNNYSIDE AVENUE
BELTSVILLE, MD 20705-5100

SHEET CA-501
88 OF 176

C:\Users\MICHAEL~1\AppData\Local\Temp\AcPublish_28588\CA501.dwg
May 20, 2026 - 8:33am

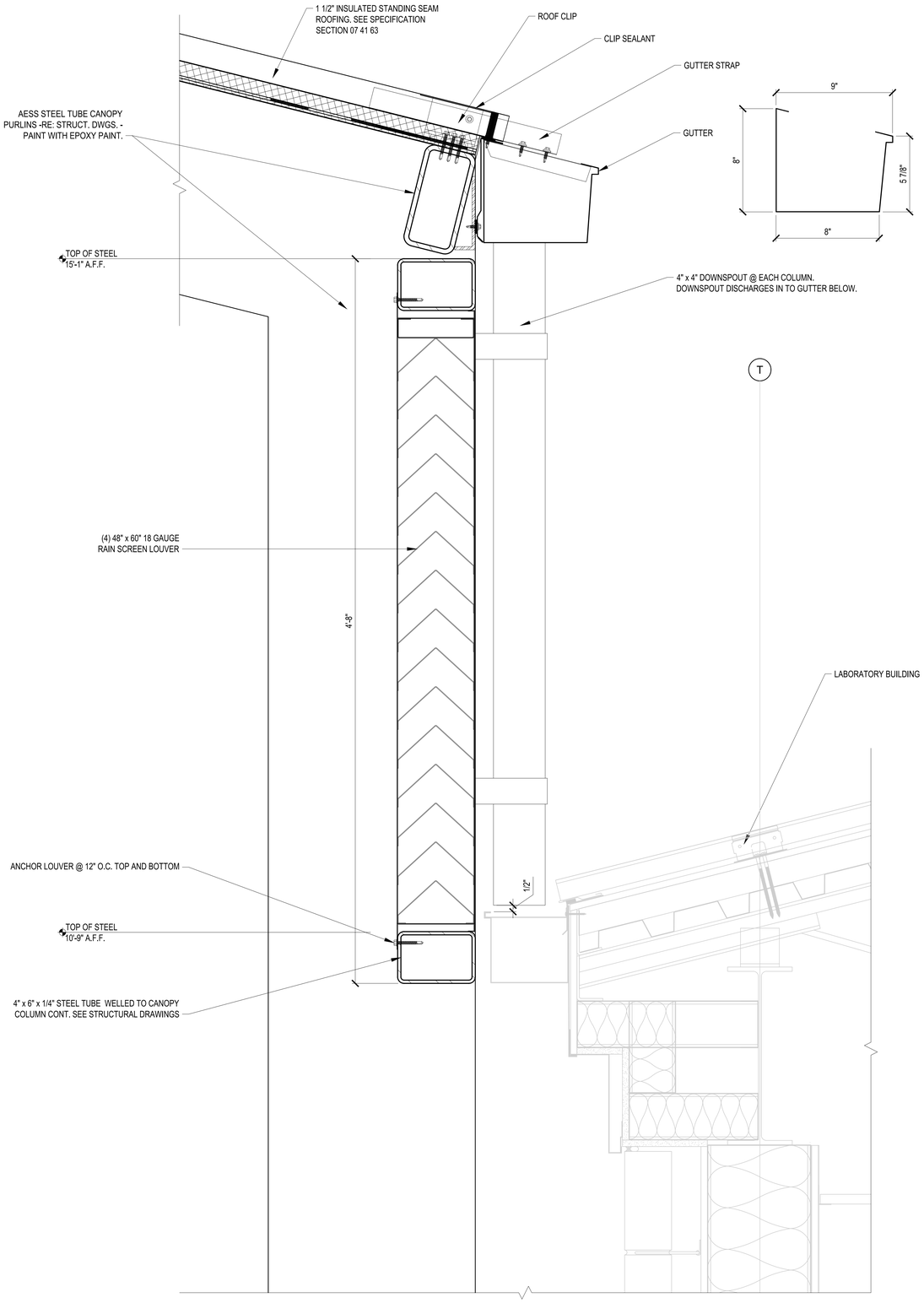

1 / CA-502 BID OPTION #1
RAIN SCREEN DETAIL
SCALE: 3"=1'-0"

0 3" 6" 1'
SCALE: 3"=1'-0"

C:\Users\MBOHE~1\AppData\Local\Temp\AcPublish_28588\CA502.dwg
May 20, 2026 - 8:30am

Johnson, Mº Adams, Inc.
ARCHITECTS/ENGINEERS/CEO PLANNING SURVEYING MANAGEMENT
P.O. BOX 510, GREENWOOD, MISSISSIPPI - (662) 455-6411

REGISTERED ARCHITECT Robin Earl Henry 2515 Greenwood, MS STATE OF MISSISSIPPI

NO.	DATE	BY	DESCRIPTION

REVISIONS

A-E FIRM	USDA
PROJECT MANAGER	REH
EPM	WN
DESIGNER	JLF
PPM	XXX
CHECKED BY	DRL
SAFETY & HEALTH	CM
JOB #	5825
REAL PROPERTY	JS

USDA Agricultural Research Service

USDA AGRICULTURAL RESEARCH SERVICE
SUGARCANE RESEARCH LABORATORY
HOUMA, LOUISIANA

BID OPTION #1
ROOF DETAILS

PROJECT NO. XXX	AGRICULTURAL RESEARCH SERVICE FACILITIES ENGINEERING BRANCH 5106 SUNNYSIDE AVENUE BELTSVILLE, MD 20705-5100	SHEET CA-502
DATE 05/20/2026		89 OF 176