GENERAL MECHANICAL NOTES:

1. INSTALLATION OF HVAC WORK SHALL BE COORDINATED WITH OTHER TRADES BEFORE ANY INSTALLATION IS DONE. DUCTWORK SHOWN ON PLANS IS SCHEMATIC. PROVIDE ALL TRANSITIONS, ELBOWS, ETC. REQUIRED TO AVOID CONFLICTS & MAXIMIZE CEILING HEIGHTS. EQUIPMENT, PIPING OR DUCTWORK INTERFERING WITH OTHER TRADES SHALL BE RELOCATED AS REQUIRED AT NO ADDITIONAL COST TO THE OWNER.

2. COORDINATE MECHANICAL AND ELECTRICAL SUCH THAT MECHANICAL PIPING, DUCTWORK AND EQUIPMENT IS NOT LOCATED OVER OR ABOVE ANY ELECTRICAL, COMMUNICATIONS, OR DATA EQUIPMENT.

3. AT START OF CONSTRUCTION, PREPARE TYPED LISTS OF EQUIPMENT THAT ARE SUPPLIED REQUIRING ELECTRICAL WORK, AND SEND LISTS TO THE ELECTRICAL CONTRACTOR FOR REVIEW AND COORDINATION.

4. WRITTEN DIMENSIONS ON DRAWINGS SHALL HAVE PRECEDENCE OVER SCALED DIMENSIONS. VERIFY DIMENSIONS ON SITE.

5. EQUIPMENT SHALL BE INSTALLED IN ACCORDANCE WITH MANUFACTURER'S APPROVED CLEARANCE, UNIFIED FACILITIES CRITERIA, AND INTERNATIONAL BUILDING CODE / INTERNATIONAL MECHANICAL CODE.

6. INSTALLATION OF EQUIPMENT SHALL PERMIT ACCESSIBILITY FOR SERVICE AND/OR REPLACEMENT WITHOUT NECESSITATING REMOVAL OR MODIFICATION TO OTHER PIPING, WIRING, OR EQUIPMENT.

7. CEILING-MOUNTED EQUIPMENT SHALL BE INSTALLED IN SUCH A MANNER THAT LIGHTS, PIPING, DUCTWORK, ETC., DO NOT BLOCK ACCESS TO EQUIPMENT AND RELATED ACCESSORIES.

8. DUCTWORK AIR DISTRIBUTION SYSTEMS SHALL BE INSTALLED IN ACCORDANCE WITH SMACNA STANDARDS AND THE PRESSURE CLASSIFICATION OF EACH INDIVIDUAL DUCTWORK SYSTEM.

9. VOLUME DAMPERS SHALL BE PROVIDED AT EACH MAIN BRANCH TAKE-OFF, EACH TAKEOFF TO DIFFUSERS/GRILLS/REGISTERS, AND OTHER LOCATIONS WHERE REQUIRED TO PROPERLY BALANCE THE SYSTEM. ALL REQUIRED VOLUME DAMPERS MAY NOT BE SHOWN ON PLANS.

10. INSTRUMENT TEST HOLES SHALL BE PROVIDED IN AIR DISTRIBUTION SYSTEMS WHEREVER VOLUME DAMPERS ARE INSTALLED. TEST HOLES SHALL BE SEALED WITH RUBBER OR PLASTIC TEST HOLE PLUGS.

11. SQUARE ELBOWS SHALL ONLY BE USED WHERE SPACE LIMITATIONS PREVENT USE OF 1.5 RADIUS ELBOW AND ONLY UPON APPROVAL OF CONTRACTING OFFICER. PROVIDE TURNING VANES IN ALL SQUARE ELBOWS GREATER THAN OR EQUAL TO 45°. TURNING VANES SHALL BE SINGLE THICKNESS TYPE WITHOUT RAILING EDGE. TURNING VANES LONGER THAN 36 INCHES SHALL BE DOUBLE THICKNESS TYPE.

12. DUCTWORK RUNOUTS TO AIR DISTRIBUTION DEVICES SHALL BE SAME DIAMETER AS AIR DISTRIBUTION DEVICE INLET CONNECTION UNLESS OTHERWISE NOTED ON THE DRAWINGS.

13. FLEXIBLE DUCTWORK RUNOUTS FROM BRANCH DUCTS TO AIR DISTRIBUTION DEVICES SHALL NOT EXCEED 5 FEET IN LENGTH. BENDS IN FLEXIBLE DUCTWORK SHALL NOT EXCEED A MAXIMUM OF 45 DEGREE CHANGE OF DIRECTION AND SHALL BE SUPPORTED SUCH THAT THE BEND RADIUS IS NOT RESTRICTIVE TO AIR FLOW THROUGH THE DUCT. FLEXIBLE DUCTWORK SHALL NOT BE CRUSHED OR DISTORTED IN ITS FINAL CONFIGURATION.

14. PROVIDE SHEETMETAL TRANSITIONS AT AIR HANDLING UNITS, HEAT PUMP UNITS, FANS, AND OTHER SIMILAR HVAC EQUIPMENT. TRANSITION TO FULL SIZE OF CONNECTION ON UNIT. FLEXIBLE DUCT CONNECTORS SHALL BE USED ON FINAL CONNECTION TO AIR HANDLING EQUIPMENT.

15. EXACT LOCATION OF CEILING DIFFUSERS, GRILLES AND REGISTERS SHALL BE DETERMINED BY ARCHITECTURAL REFLECTED CEILING PLAN.

16. EXACT LOCATIONS OF THERMOSTATS, CO2 SENSORS, AND EMCS SENSORS SHALL BE COORDINATED WITH FINAL LOCATIONS OF WALL-MOUNTED ARCHITECTURAL AND ELECTRICAL EQUIPMENT. MOUNT THERMOSTATS AND CO2 SENSORS MINIMUM 48" AFF.

17. SPECIFICATIONS TAKE PRECEDENCE OVER DRAWINGS. HOWEVER, ITEMS SHOWN ON DRAWING BUT NOT IN THE SPECIFICATIONS ARE REQUIRED WITHIN THE PROJECT SCOPE. IN ADDITION, SPECIFIC ITEMS SHOWN ON THE DRAWINGS TAKE PRECEDENCE OVER SPECIFICATIONS IN CASES WHERE THE SPECIFICATION HAS OPTIONS.

18. DUCT SIZES SHOWN ARE INSIDE CLEAR DIMENSIONS.

19. EXPOSED DUCTWORK, WITH THE EXCEPTION OF DUCTWORK IN MECHANICAL ROOMS SHALL BE DOUBLE-WALL, DUCTWORK WITH COATING.

20. NOT ALL MECHANICAL ABBREVIATIONS SHOWN WILL BE USED FOR THIS PROJECT.

21. ALL THERMOSTATS SHALL BE WALL MOUNTED AND WIRED.

22. ALL EQUIPMENT INSTALLED IN THIS PROJECT SHALL COMPLY WITH THE "BUY AMERICAN ACT". BASIS OF DESIGN SHOWN ON SCHEDULES IS TO ESTABLISH A STANDARD OF QUALITY, NOT TO LIMIT COMPETITION. EQUIVALENT EQUIPMENT FROM ANOTHER MANUFACTURER IS ACCEPTABLE. MANUFACTURER NAME AND MODEL NUMBERS ARE BASIS OF DESIGN AND ARE SHOWN FOR INFORMATION ONLY. REFER TO SPECIFICATIONS FOR COMPLETE REQUIREMENTS.

23. ALL COMMUNICATIONS PREMISE WIRING AND CABLE TRAYS THROUGHOUT THE FACILITY MUST BE PROTECTED AND UNINTERRUPTED DURING CONSTRUCTION. THIS INCLUDES ELECTRICAL POWER TO COMMUNICATIONS EQUIPMENT. NO COMMUNICATIONS OUTAGES MUST TAKE PLACE WITHOUT THE CONSENT OF THE CONTRACTING OFFICER.

24. CONTRACTOR MUST DEMOLISH ALL EQUIPMENT, PIPING, DUCTWORK, INSULATION, SUPPORTS, CONTROLS THERMOSTATS, WIRING AND ALL APPURTENANCES WITH THE HVAC SYSTEM TO BE DEMOLISHED.

25. CONTROLS CONTRACTOR SHALL PROVIDE ALL LOW VOLTAGE DEVICES, CONDUCTORS, AND PATHWAYS IN ACCORDANCE WITH THE REQUIREMENTS OF 26 20 00. INSTALL CONTROL WIRING IN CONDUIT. SEE DIVISION 26 SPECIFICATIONS FOR REQUIREMENTS.

26. THE DESIGN INTENT OF THIS PROJECT IS TO REPLACE THE EXISTING CONTROLS SYSTEM IN ITS ENTIRETY, EXCLUDING EXISTING TO REMAIN ITEMS BUT INCLUDING ALL CONTROL PANELS, DEVICES, WIRING, COMPONENTS, AND ASSOCIATED APPURTENANCES TO BE DEMOLISHED NECESSARY TO PROVIDE A COMPLETE, FULLY FUNCTIONAL, AND OPERATIONAL SYSTEM. ALL EXISTING EQUIPMENT INDICATED TO REMAIN MUST BE COMPLETELY CONNECTED TO AND FULLY INTEGRATED WITH THE NEW CONTROLS SYSTEM. THE NEW CONTROLS SYSTEM MUST MAINTAIN ALL EXISTING MONITORING, CONTROL, TRENDING, INTERLOCK, AND ALARM FUNCTIONS CURRENTLY PROVIDED BY THE EXISTING SYSTEM. ALL EXISTING CONTROL POINTS, WHETHER SPECIFICALLY INDICATED ON THE DRAWINGS OR NOT, MUST BE MAINTAINED AND INCORPORATED INTO THE NEW SYSTEM. CONTRACTOR MUST FIELD-VERIFY ALL EXISTING CONTROL POINTS, SEQUENCES OF OPERATION, INTERLOCKS, AND CONNECTIONS PRIOR TO INSTALLATION. UPON COMPLETION OF THE CONTROLS SYSTEM WORK, ALL NEW AND EXISTING EQUIPMENT AFFECTED BY THIS PROJECT MUST BE TESTED, CALIBRATED, AND BALANCED AS REQUIRED TO VERIFY PROPER SYSTEM OPERATION AND PERFORMANCE IN ACCORDANCE WITH THE FINAL SEQUENCES OF OPERATION.

27. ALL EQUIPMENT PROVIDED MUST BE SELECTED FOR USE IN A COASTAL ENVIRONMENT AND MUST HAVE 3000 HOUR DURATION TEST FOR OUTSIDE EQUIPMENT AND EQUIPMENT BRINGING IN OR IN CONTACT WITH OUTDOOR AIR. PROVIDE MECHANICAL EQUIPMENT COILS WITH A MANUFACTURE APPROVED COATING SYSTEM THAT IS DESIGNED FOR A 5000 HOUR DURATION SALT SPRAY TEST.

J:\Agronomy\2025 Jobs\5825 USDA Sugarcane Research Lab Houma LA\07 Working Folder\Mech\M-001.dwg
May 05, 2026 - 2:29pm

NO.	DATE	BY	DESCRIPTION

REVISIONS

Johnson, Mirmiran & Thompson, Inc. P.A.
ARCHITECTS/ENGINEERS PLANNING SURVEYING MANAGEMENT
P.O. BOX 6 S. GREENWOOD, MISSISSIPPI (662) 455-6443

STATE OF LOUISIANA
RAFAEL M. ORTIZ
LICENSE NO. 41470
05/20/26
PROFESSIONAL ENGINEER

A-E FIRM	USDA
PROJECT MANAGER	EPM
REH	WN
DESIGNER	PPM
SME	XXX
CHECKED BY	SAFETY & HEALTH
DRL	CM
JOB #	REAL PROPERTY
5825	JS

USDA Agricultural Research Service

USDA AGRICULTURAL RESEARCH SERVICE
SUGARCANE RESEARCH LABORATORY
HOUMA, LOUISIANA

MECHANICAL GENERAL NOTES

PROJECT NO.	XXX
DATE	05/20/2026

AGRICULTURAL RESEARCH SERVICE
FACILITIES ENGINEERING BRANCH
5106 SUNNYSIDE AVENUE
BELTSVILLE, MD 20705-5100

SHEET M-001

ABBREVIATIONS:

@	AT
&	AND
AHU	AIR HANDLING UNIT
ARCH	ARCHITECT, ARCHITECTURAL
AS	AIR SEPARATOR
ASHRAE	AMERICAN SOCIETY OF HEATING, REFRIGERATING, AND AIR CONDITIONING ENGINEERS
ASTM	AMERICAN SOCIETY FOR TESTING AND MATERIALS
BDD	BACKDRAFT DAMPER
BLDG	BUILDING
BTU, BTUH	BRITISH THERMAL UNITS, BTUs PER HOUR
CD	CONDENSATE DRAIN
CFM	CUBIC FEET PER MINUTE
CHW	CHILLED WATER
CHWR	CHILLED WATER RETURN
CHWS	CHILLED WATER SUPPLY
CLG	COOLING
CMU	CONCRETE MASONRY UNIT
CO	CLEANOUT
CO2	CARBON DIOXIDE
CONC	CONCRETE
COND	STEAM CONDENSATE
CONN	CONNECT, CONNECTING, CONNECTION
CONT	CONTINUED
CONV	STEAM CONVERTER
COP	COEFFICIENT OF PERFORMANCE
COR	CONTRACTING OFFICER'S (OWNER'S) REPRESENTATIVE
CT	COOLING TOWER
CU	CONDENSING UNIT
CWR	CONDENSER WATER RETURN
CWS	CONDENSER WATER SUPPLY
D	DEPTH
DB, Tdb	DRY BULB (TEMPERATURE)
dBA	DECIBELS
DCW	DOMESTIC COLD WATER
DDC	DIRECT DIGITAL CONTROLS
DEG. F (°F)	DEGREES FAHRENHEIT
DF	DESTRATIFICATION FAN
DFCU	DUCTLESS FAN COIL UNIT
DH	DEHUMIDIFIER
DIA, Ø	DIAMETER
DIV	DIVISION
DN	DOWN
DP, PD	DIFFERENTIAL PRESSURE, PRESSURE DROP
DSCU	DUCTLESS SPLIT CONDENSING UNIT
DSHP	DUCTLESS SPLIT HEAT PUMP
DWG	DRAWING
DX	DIRECT EXPANSION
EA	EXHAUST AIR
EAG	EXHAUST AIR GRILLE
EAT	ENTERING AIR TEMPERATURE
EER	ENERGY EFFICIENCY RATIO
EF	EXHAUST FAN
EFF	EFFICIENCY
ELEC	ELECTRICAL
EMCS	ENERGY MONITORING AND CONTROLS SYSTEM
ERU	ENERGY RECOVERY UNIT
ERV	ENERGY RECOVERY VENTILATOR
ESP	EXTERNAL STATIC PRESSURE
ET	EXPANSION TANK
EUH	ELECTRIC UNIT HEATER
EWT	ENTERING WATER TEMPERATURE
EXT	EXTERIOR
EXH	EXHAUST
EXIST.	EXISTING
FCU	FAN COIL UNIT
FD	FIRE DAMPER
FFE	FINISHED FLOOR ELEVATION
FLA	FULL LOAD AMPS
FOB	FLAT ON BOTTOM
FOT	FLAT ON TOP
FPM	FEET PER MINUTE
FSD	FIRE SMOKE DAMPER
FT	FOOT, FEET
FT WG	FEET WATER GAUGE
FV	FLUE VENT
GA	GAGE
GC	GENERAL CONTRACTOR
GPM	GALLONS PER MINUTE
GWH	GAS WATER HEATER
H	HEIGHT
HPS	HIGH PRESSURE STEAM
HR	HOUR
HTG	HEATING
HTR	HEATER
HTW	HEATING WATER
HWR	HEATING WATER RETURN
HWS	HEATING WATER SUPPLY
HVAC	HEATING, VENTILATING, AND AIR CONDITIONING
HX	HEAT EXCHANGER
HZ	HERTZ
IMC	INTERNATIONAL MECHANICAL CODE
IN	INCH, INCHES
IN WC	INCHES WATER COLUMN
IN WG	INCHES WATER GAUGE
IPLV	INTEGRATED PART LOAD VALUE
KW	KILOWATTS
L	LENGTH, LOUVER (WALL)
LAT	LEAVING AIR TEMPERATURE
LBD	LINEAR BAR DIFFUSER
LBS	POUNDS
LWT	LEAVING WATER TEMPERATURE
MAX	MAXIMUM
MBH	1000 BRITISH THERMAL UNITS
MCA	MINIMUM CIRCUIT AMPACITY
MECH	MECHANICAL
MERV	MINIMUM EFFICIENCY REPORTING VALUE
MFCR, MFCG	MANUFACTURER, MANUFACTURING
MIN	MINIMUM
MOCP, MOP	MAXIMUM OVER CURRENT PROTECTION
MTWR	MEDIUM TEMPERATURE WATER RETURN
MTWS	MEDIUM TEMPERATURE WATER SUPPLY
MXB	MIXING BOX
N.C.	NORMALLY CLOSED
NC	NOISE CRITERIA
NG	NATURAL GAS
NO.	NUMBER
N.O.	NORMALLY OPEN
NTS	NOT TO SCALE
OA	OUTSIDE AIR
OD	OUTSIDE DAMPER
PCHWR	PLANT CHILLED WATER RETURN
PCHWS	PLANT CHILLED WATER SUPPLY
PD	PRESSURE DROP
PH	PHASE
PLBG	PLUMBING
PMTWR	PLANT MEDIUM TEMPERATURE WATER RETURN
PMTWS	PLANT MEDIUM TEMPERATURE WATER SUPPLY
PPM	PARTS PER MILLION
PRV	PRESSURE RELIEF VALVE
PSI	POUNDS PER SQUARE INCH
QTY	QUANTITY
RA	RETURN AIR
RAG	RETURN AIR GRILLE
RH	RELATIVE HUMIDITY, ROOF HOOD
RM	ROOM
RPM	REVOLUTIONS PER MINUTE
SA	SUPPLY AIR
SAD	SUPPLY AIR DIFFUSER
SAG	SUPPLY AIR GRILLE
SD	SMOKE DAMPER, SMOKE DETECTOR
SEER	SEASONAL ENERGY EFFICIENCY RATIO
SF	SUPPLY FAN
SMACNA	SHEET METAL AND AIR CONDITIONING CONTRACTOR'S NATIONAL ASSOCIATION
SP	STATIC PRESSURE
SS	STAINLESS STEEL
TEMP	TEMPERATURE
TSTAT	THERMOSTAT
TYP	TYPICAL
UH	UNIT HEATER
UL	UNDERWRITER'S LABORATORY
UMCS	UTILITY MONITORING AND CONTROL SYSTEM
V	VOLTAGE, VOLTS
VAV	VARIABLE AIR VOLUME
VD	VOLUME DAMPER
VFD	VARIABLE FREQUENCY DRIVE
VRF	VARIABLE REFRIGERANT FLOW
WB, Twb	WET BULB (TEMPERATURE)

LEGEND

HVAC PIPING

CHR	CHILLED WATER RETURN
CHS	CHILLED WATER SUPPLY
HWR	HEATING WATER RETURN
HWS	HEATING WATER SUPPLY
RL	REFRIGERANT LIQUID
RS	REFRIGERANT SUCTION

VALVES

- BUTTERFLY VALVE
- SWING GATE CHECK VALVE
- SPRING CHECK VALVE
- BALL VALVE
- ELECTRIC OPERATED GATE VALVE
- SOLENOID OPERATED GATE VALVE
- PNEUMATIC OPERATED GATE VALVE
- 3WAY ELECTRIC MOTOR CONTROLLER
- GLOBE VALVE
- GAS VALVE
- SOLENOID VALVE
- GATE VALVE
- BALANCING VALVE - MECHANICAL
- BALANCING VALVE - PLUMBING

DUCTWORK

- 500x300 — INSIDE DUCT SIZE (FIRST FIGURE IS SIDE SHOWN)
- FLEXIBLE DUCT CONNECTION
- SUPPLY AIR DUCT UP
- SUPPLY AIR DUCT DOWN
- RETURN AIR DUCT UP
- RETURN AIR DUCT DOWN
- EXHAUST AIR DUCT UP
- EXHAUST AIR DUCT DOWN
- SQUARE OR RECTANGULAR DUCT ELBOW WITH TURNING VANES
- ROUND OR RECTANGULAR DUCT RADIUS ELBOW
- FLEXIBLE DUCT
- CEILING MOUNTED SUPPLY AIR DIFFUSER, ARROWS INDICATE DIRECTION OF FLOW
- EXHAUST AIR GRILLE
- RETURN AIR GRILLE
- MANUAL VOLUME DAMPER
- M — MOTORIZED DAMPER
- BACKDRAFT DAMPER
- PARALLEL BLADE DAMPER
- OPPOSED BLADE DAMPER
- FIRE DAMPER

CONTROL DIAGRAMS

- SUPPLY AIR DIFFUSER
- LABORATORY SUPPLY AIR DIFFUSER
- EXHAUST AIR GRILLE
- LABORATORY SUPPLY AIR DIFFUSER WITH HEPA FILTER
- CONSTANT VOLUME VENTURI AIR VALVE
- CONSTANT VOLUME VENTURI AIR VALVE WITH ROOM LEVEL CONTROLLER
- VARIABLE VOLUME VENTURI AIR VALVE
- VARIABLE VOLUME VENTURI AIR VALVE WITH ROOM LEVEL CONTROLLER
- UCM — UNIT CONTROL MODULE
- APM — ACTIVE ROOM PRESSURE MONITOR
- LDU — LOCAL DISPLAY UNIT FOR MONITORING AND CONTROL
- MCC — MOTOR CONTROL CENTER
- HC — HUMIDITY CONTROLLER
- PC — PRESSURE CONTROLLER
- TC — TEMPERATURE CONTROLLER
- HUMIDITY CONTROLLER
- ENTHALPY CONTROLLER
- VSC — VARIABLE SPEED MOTOR CONTROLLER
- CS — CURRENT SENSOR
- ΔP — DIFFERENTIAL PRESSURE SWITCH (BINARY)
- ΔPS — DIFFERENTIAL PRESSURE SENSOR (ANALOG)
- ES — DAMPER END SWITCH (BINARY)
- FS — FLOW SENSOR
- H — HUMIDITY SENSOR
- P — PRESSURE SENSOR
- T — TEMPERATURE SENSOR
- AFS — AIR FLOW SWITCH
- HOA — HAND OFF AUTO SWITCH
- $ — MANUAL SWITCH
- S/S — START / STOP SWITCH
- TTT — AIR FLOW MEASURING STATION
- H — HUMIDISTAT (SPACE)
- T — THERMOSTAT (SPACE)
- S — SMOKE DETECTOR
- A — ROOM SETPOINT ADJUSTMENT

STATE OF LOUISIANA — CRAIG M. LIMES — LICENSED — 05/20/26 — PROFESSIONAL ENGINEER

Johnson Mˢ Adams PLLC — ARCHITECTS/ENGINEERS PLANNERS SURVEYORS — P.O. BOX 511, GREENWOOD, MISSISSIPPI - (662) 455-6643

NO.	DATE	BY	DESCRIPTION

REVISIONS

A-E FIRM	USDA
PROJECT MANAGER: REH	EPM: WN
DESIGNER: SME	PPM: XXX
CHECKED BY: DRL	SAFETY & HEALTH: CM
JOB #: 5825	REAL PROPERTY: JS

USDA Agricultural Research Service

USDA AGRICULTURAL RESEARCH SERVICE
SUGARCANE RESEARCH LABORATORY
HOUMA, LOUISIANA

MECHANICAL
ABBREVIATIONS AND LEGEND

PROJECT NO. XXX	AGRICULTURAL RESEARCH SERVICE FACILITIES ENGINEERING BRANCH 5106 SUNNYSIDE AVENUE BELTSVILLE, MD 20705-5100	SHEET M-002
DATE 05/20/2026		117 OF 176

J:\greenwood\2025 Jobs\5825 USDA Sugarcane Research Lab Houma LA\07 Working Folder\Mech\M-002.dwg
May 19, 2026 - 7:59pm

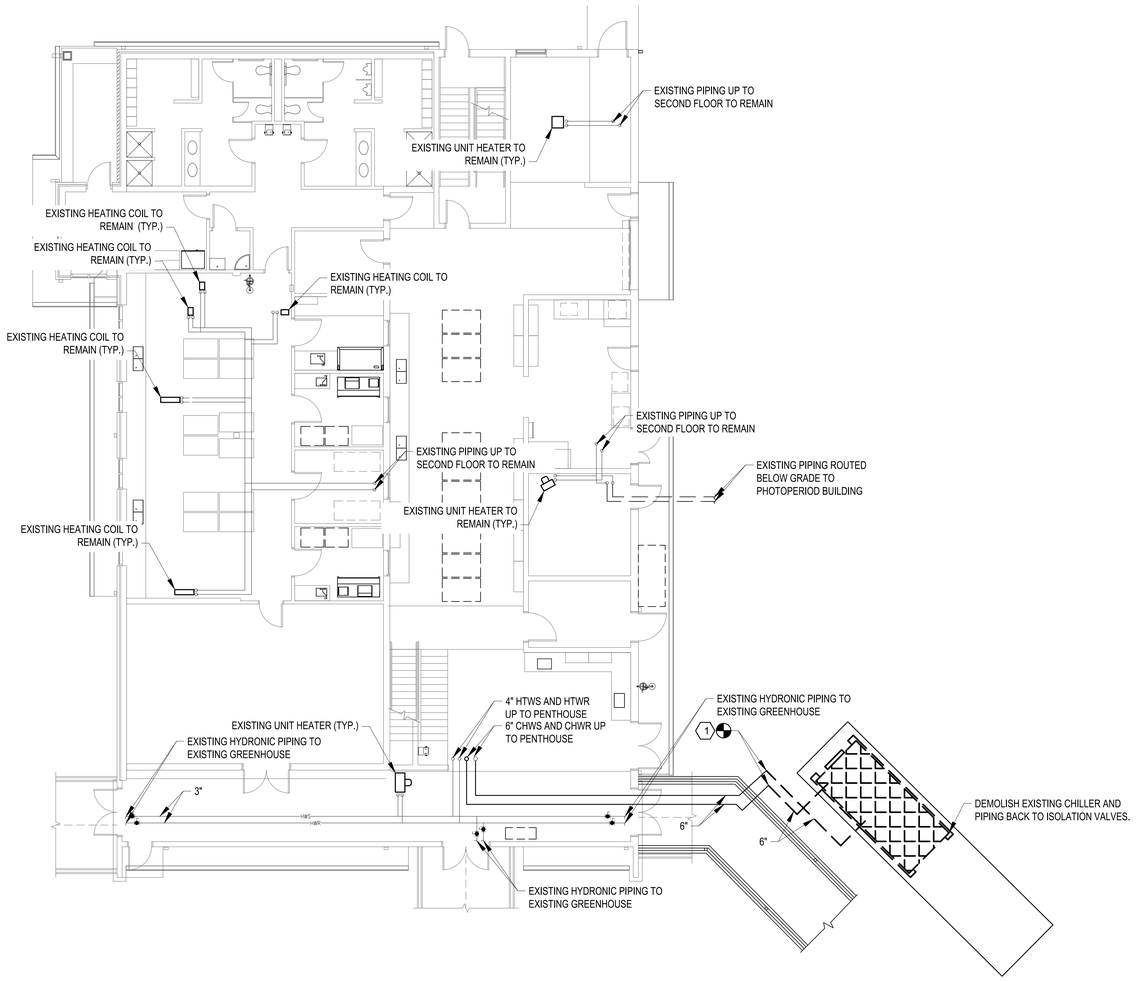

1 MD101 FIRST FLOOR MECHANICAL DEMOLITION PLAN
SCALE: 1/8"=1'-0"

PLAN NORTH TRUE NORTH

KEYED NOTES

1. DEMOLISH EXISTING CHILLER AND ALL APPURTENANCES. DEMOLISH EXISTING PIPING UP TO EXISTING ELBOW SHOWN AS AN EXTENT OF DEMOLITION AND TEMPORARILY CAP FOR RECONNECTION.

GENERAL NOTES

1. THE DEMOLITION PLAN AND EXISTING CONDITIONS ARE APPROXIMATE. ITEMS TO BE REMOVED ARE DESIGNATED BY HATCHING AND DASHED LINES. OTHER ITEMS ARE INTENDED TO REMAIN IN PLACE UNLESS NOTED OTHERWISE.
2. ANY DAMAGE TO EXISTING TO REMAIN SYSTEMS MUST BE REPAIRED AT NO COST TO THE GOVERNMENT.

LEGEND

EXTENT OF DEMOLITION

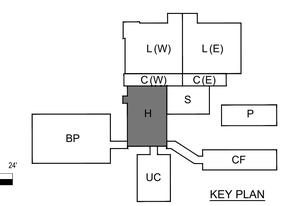

KEY PLAN

0 4' 8' 16' 24'
SCALE: 1/8"= 1'-0"

NO.	DATE	BY	DESCRIPTION

REVISIONS

Johnson McAdams
ARCHITECTS ENGINEERS PLANNING SURVEYING MANAGEMENT
P.O. BOX 515, GREENWOOD, MISSISSIPPI - (662) 455-6663

A-E FIRM	USDA
PROJECT MANAGER REH	EPM WN
DESIGNER SME	PPM XXX
CHECKED BY DRL	SAFETY & HEALTH CM
JOB # 5825	REAL PROPERTY JS

USDA Agricultural Research Service

USDA AGRICULTURAL RESEARCH SERVICE
SUGARCANE RESEARCH LABORATORY
HOUMA, LOUISIANA

FIRST FLOOR MECHANICAL DEMOLITION PLAN

PROJECT NO. XXX
DATE 05/20/2026

AGRICULTURAL RESEARCH SERVICE
FACILITIES ENGINEERING BRANCH
5106 SUNNYSIDE AVENUE
BELTSVILLE, MD 20705-5100

SHEET MD101
118 OF 176

STATE OF LOUISIANA
DANIEL M. ENGLE
LICENSED PROFESSIONAL ENGINEER
05/20/26
PROFESSIONAL ENGINEER

J:\greenwood\2025 Jobs\5825 USDA Sugarcane Research Lab Houma LA\07 Working Folder\Mech\MD101.dwg
May 19, 2026 - 7:31pm

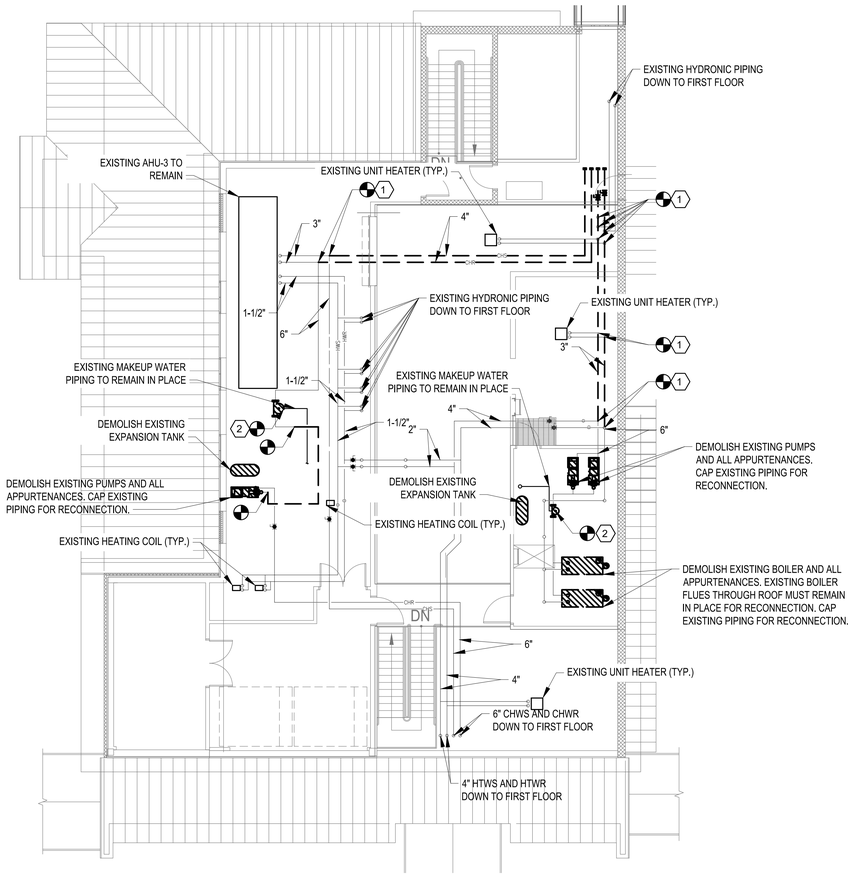

1 MD102 SECOND FLOOR MECHANICAL DEMOLITION PLAN

SCALE: 1/8"=1'-0"

PLAN NORTH

TRUE NORTH

KEYED NOTES

1. DEMOLISH EXISTING PIPING, HANGERS AND ALL APPURTENANCES UP TO EXISTING TEE AND TEMPORARILY CAP FOR RECONNECTION. TEMPORARILY CAP PIPING SERVING EXISTING EQUIPMENT TO REMAIN.
2. DEMOLISH EXISTING AIR SEPARATOR AND TEMPORARILY CAP PIPING FOR RECONNECTION. EXISTING MAKEUP WATER CONNECTION MUST BE CAPPED AND REMAIN IN PLACE FOR REUSE.

GENERAL NOTES

1. THE DEMOLITION PLAN AND EXISTING CONDITIONS ARE APPROXIMATE. ITEMS TO BE REMOVED ARE DESIGNATED BY HATCHING AND DASHED LINES. OTHER ITEMS ARE INTENDED TO REMAIN IN PLACE UNLESS NOTED OTHERWISE.
2. THE EXISTING HEATING WATER AND CHILLED WATER SYSTEMS MUST REMAIN FULLY OPERATIONAL THROUGHOUT CONSTRUCTION. IF THE EXISTING SYSTEM IS REQUIRED TO BE TAKEN OUT OF SERVICE AT ANY TIME, THE CONTRACTOR MUST PROVIDE A TEMPORARY SYSTEM TO MAINTAIN CONTINUOUS SERVICE, OR OBTAIN PRIOR APPROVAL FOR A SCHEDULED DOWNTIME WINDOW. ALL PROPOSED OR ESTIMATED DOWNTIME MUST BE COORDINATED IN ADVANCE AND RECEIVE WRITTEN APPROVAL FROM THE GOVERNMENT PRIOR TO IMPLEMENTATION. THE CONTRACTOR IS RESPONSIBLE FOR PROTECTING ALL COMPONENTS AND FUNCTIONS OF ALL EXISTING SYSTEM THROUGHOUT ALL PHASES OF CONSTRUCTION. ANY DAMAGE OR INTERRUPTION TO THE SYSTEM RESULTING FROM THE CONTRACTOR'S OPERATIONS MUST BE REPAIRED OR REPLACED AT NO ADDED COST TO THE GOVERNMENT.

LEGEND

EXTENT OF DEMOLITION

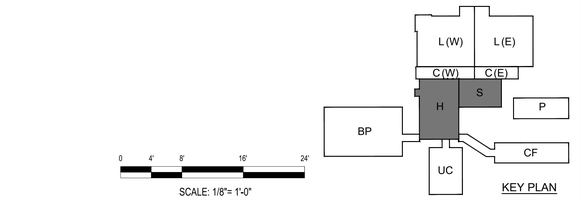

SCALE: 1/8"= 1'-0"

KEY PLAN

NO.	DATE	BY	DESCRIPTION

REVISIONS

Johnson Mˢ Adams PSM P.A. ARCHITECTS/ENGINEERS PLANNERS SURVEYING ENVIRONMENT P.O. BOX 314 GREENWOOD, MISSISSIPPI (662) 455-6441

A-E FIRM	USDA
PROJECT MANAGER	REH
EPM	WN
DESIGNER	SME
PPM	XXX
CHECKED BY	DRL
SAFETY & HEALTH	CM
JOB #	5825
REAL PROPERTY	JS

STATE OF LOUISIANA — DONNIE R. LANIER — 05/20/26 — PROFESSIONAL ENGINEER

USDA Agricultural Research Service

USDA AGRICULTURAL RESEARCH SERVICE
SUGARCANE RESEARCH LABORATORY
HOUMA, LOUISIANA

SECOND FLOOR MECHANICAL DEMOLITION PLAN

PROJECT NO.	XXX
DATE	05/20/2026

AGRICULTURAL RESEARCH SERVICE
FACILITIES ENGINEERING BRANCH
5106 SUNNYSIDE AVENUE
BELTSVILLE, MD 20705-5100

SHEET MD102

119 OF 176

J:\greenwood\2025 Jobs\5825 USDA Sugarcane Research Lab Houma LA\07 Working Folder\Revit\MD102.dwg
May 19, 2026 - 2:29pm

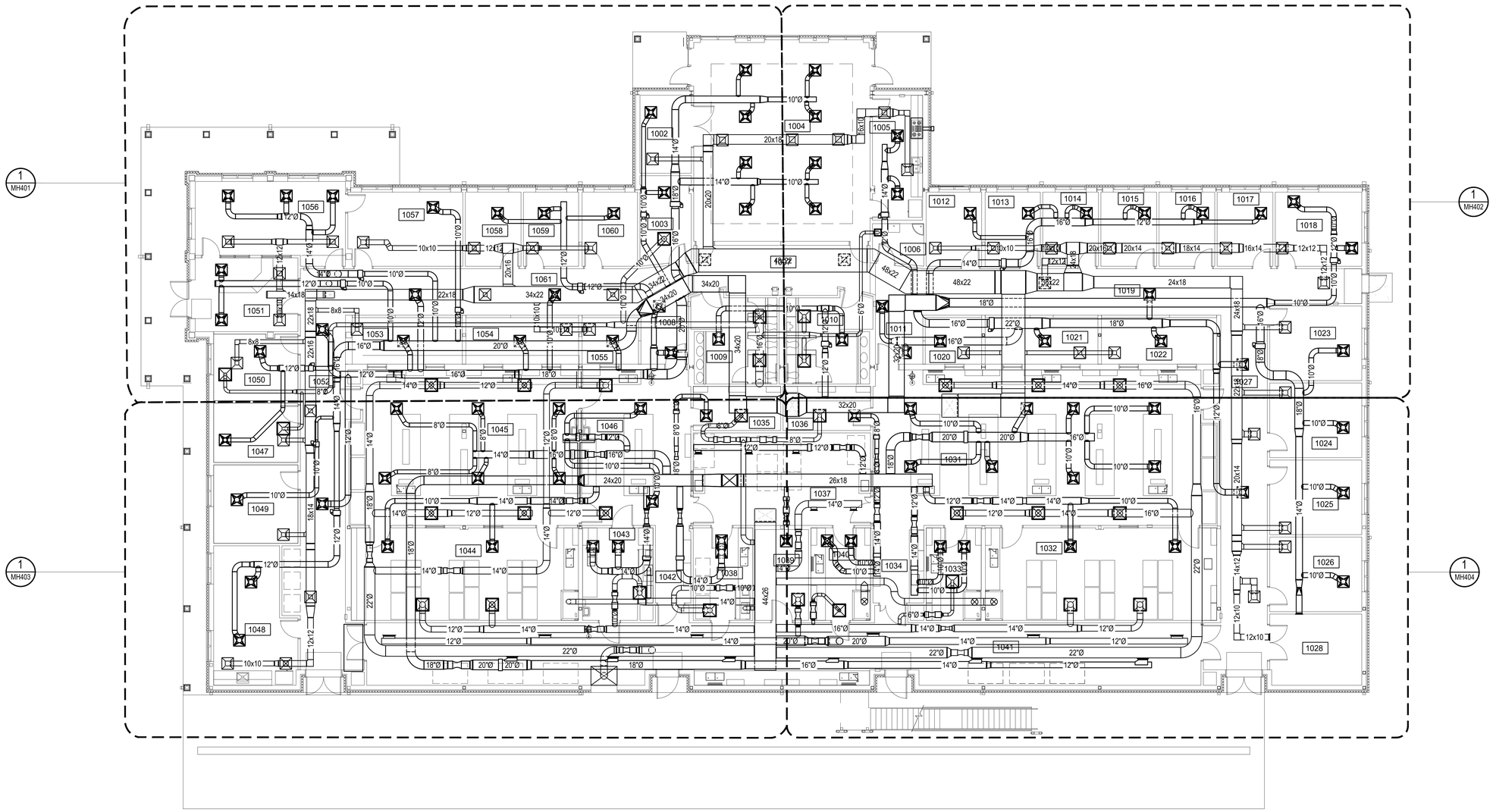

1 MH101 OVERALL FIRST FLOOR HVAC PLAN
SCALE: 1/8"=1'-0"

PLAN NORTH
TRUE NORTH

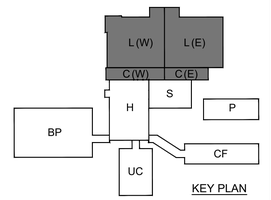

KEY PLAN

NO.	DATE	BY	DESCRIPTION

REVISIONS

THE Johnson McAdams FIRM P.A.
ARCHITECTS/ENGINEERS PLANNING SURVEYING MANAGEMENT
P.O. BOX 615 GREENWOOD, MISSISSIPPI 38602-615-0615

A-E FIRM	USDA
PROJECT MANAGER REH	EPM WN
DESIGNER SME	PPM XXX
CHECKED BY DRL	SAFETY & HEALTH CM
JOB # 5825	REAL PROPERTY JS

USDA Agricultural Research Service

USDA AGRICULTURAL RESEARCH SERVICE
SUGARCANE RESEARCH LABORATORY
HOUMA, LOUISIANA

MECHANICAL HVAC OVERALL FIRST FLOOR PLAN

PROJECT NO. XXX
DATE 05/20/2026

AGRICULTURAL RESEARCH SERVICE
FACILITIES ENGINEERING BRANCH
5106 SUNNYSIDE AVENUE
BELTSVILLE, MD 20705-5100

SHEET MH101
120 OF 176

STATE OF LOUISIANA
DANIEL M. ENGLE
LICENSED
05/20/26
PROFESSIONAL ENGINEER

J:\greenwood\2025 Jobs\5825 USDA Sugarcane Research Lab Houma LA\07 Working Folder\Mech\MH101.dwg
May 19, 2026 - 7:31pm

KEYED NOTES

1. DUCT PENETRATION LOCATIONS MUST BE COORDINATED IN A WAY TO AVOID STRUCTURAL COMPONENTS. CONCRETE FLOORING PENETRATION MUST BE PRECAST AND CONTAIN A BUILT UP CURB AROUND THE DUCTWORK TO PROTECT THE FIRST FLOOR FROM ANY SPILLS THAT MAY OCCUR IN THE MECHANICAL ROOM. PROVIDE FIRE DAMPER IN DUCTWORK IN FLOOR PENETRATION.
2. PROVIDE INSULATED MANUFACTURE APPROVED TRANSITION FROM DUCTWORK TO SHARED INTAKE LOUVER. ALL DUCTWORK MUST BE SLOPPED TO PREVENT THE INTAKE OF WATER.

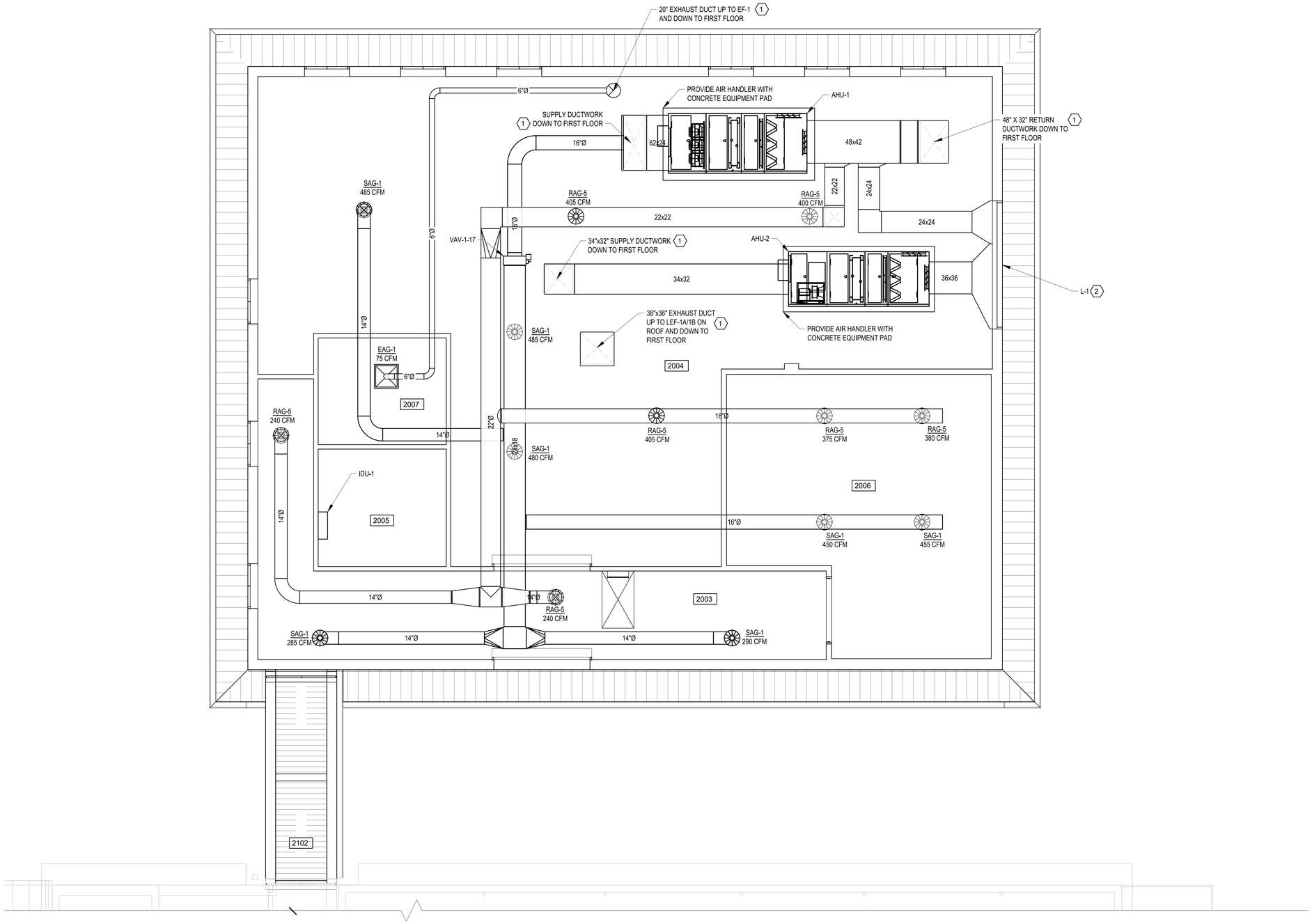

1 MH102 SECOND FLOOR HVAC PLAN
SCALE: 1/8"=1'-0"

PLAN NORTH TRUE NORTH

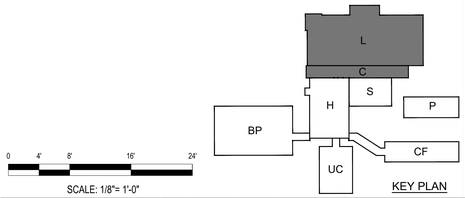

KEY PLAN

0 4' 8' 16' 24'
SCALE: 1/8"= 1'-0"

NO.	DATE	BY	DESCRIPTION

REVISIONS

THE Johnson McAdams PRINTING CORPORATION
ARCHITECTS/ENGINEERS PLANNING SURVEYING MANAGEMENT
P.O. BOX 515, GREENWOOD, MISSISSIPPI - (662) 453-6343

A-E FIRM	USDA
PROJECT MANAGER REH	EPM WN
DESIGNER SME	PPM XXX
CHECKED BY DRL	SAFETY & HEALTH CM
JOB # 5825	REAL PROPERTY JS

USDA Agricultural Research Service

USDA AGRICULTURAL RESEARCH SERVICE
SUGARCANE RESEARCH LABORATORY
HOUMA, LOUISIANA

MECHANICAL HVAC
SECOND FLOOR PLAN

PROJECT NO. XXX
DATE 05/20/2026

AGRICULTURAL RESEARCH SERVICE
FACILITIES ENGINEERING BRANCH
5106 SUNNYSIDE AVENUE
BELTSVILLE, MD 20705-5100

SHEET MH102
121 OF 176

STATE OF LOUISIANA
DANIEL M. ENGLE
LICENSED PROFESSIONAL ENGINEER
05/20/26
PROFESSIONAL ENGINEER

J:\greenwood\2025 Jobs\5825 USDA Sugarcane Research Lab Houma LA\07 Working Folder\Mech\MH102.dwg
May 19, 2026 - 7:31pm

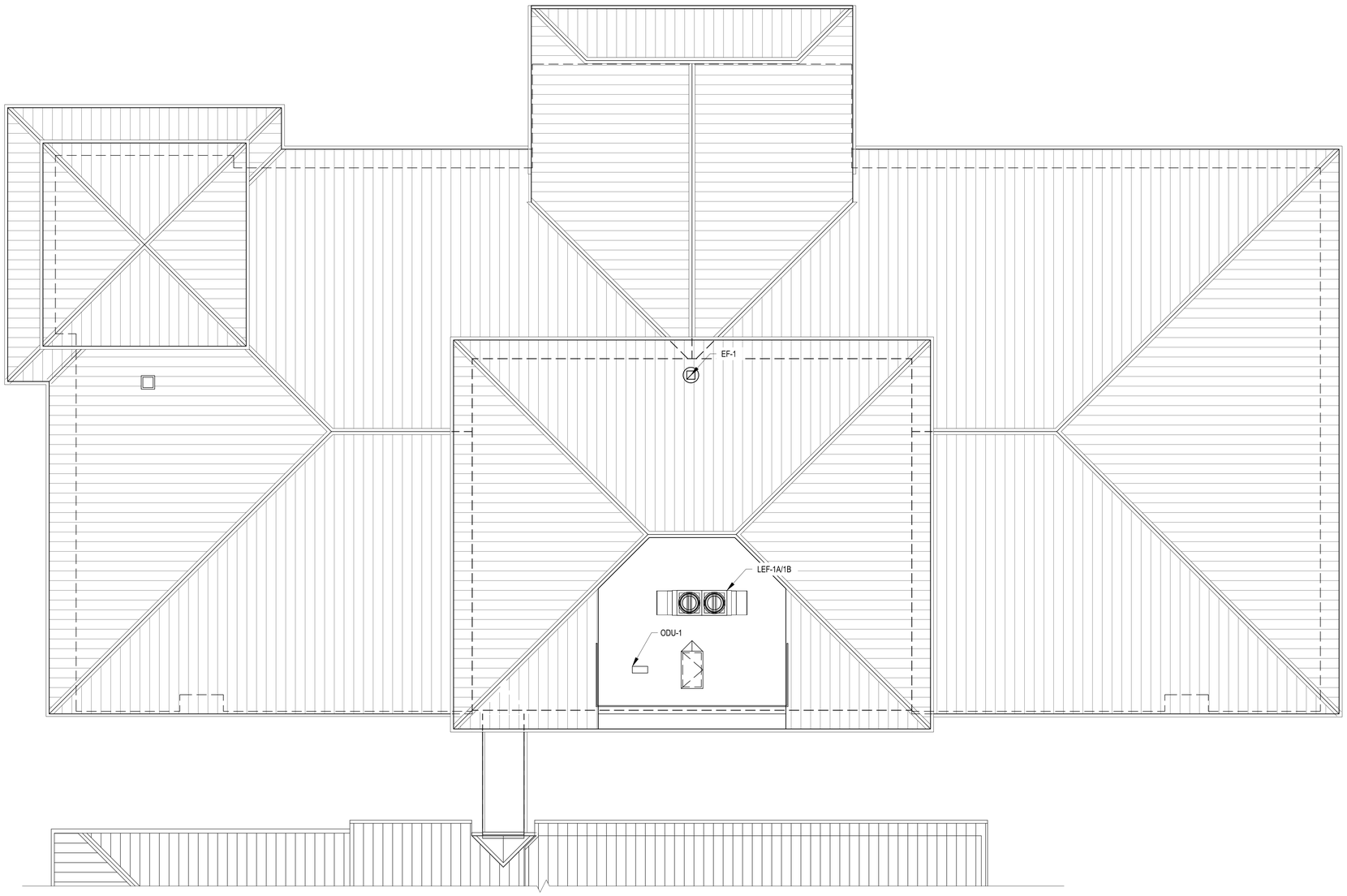

1 MH103 HAVC ROOF PLAN
SCALE: 1/8"=1'-0"

PLAN NORTH
TRUE NORTH

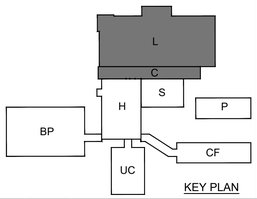

KEY PLAN

0 8' 16' 32' 48'
SCALE: 1/16" = 1'-0"

NO.	DATE	BY	DESCRIPTION

REVISIONS

Johnson McAdams
ARCHITECTS/ENGINEERS PLANNING SURVEYING MANAGEMENT
P.O. BOX 515, GREENWOOD, MISSISSIPPI 38935-0515

USDA Agricultural Research Service

USDA AGRICULTURAL RESEARCH SERVICE
SUGARCANE RESEARCH LABORATORY
HOUMA, LOUISIANA

MECHANICAL HVAC ROOF PLAN

A-E FIRM	USDA
PROJECT MANAGER REH	EPM WN
DESIGNER SME	PPM XXX
CHECKED BY DRL	SAFETY & HEALTH CM
JOB # 5825	REAL PROPERTY JS

PROJECT NO. XXX
DATE 05/20/2026

AGRICULTURAL RESEARCH SERVICE
FACILITIES ENGINEERING BRANCH
5106 SUNNYSIDE AVENUE
BELTSVILLE, MD 20705-5100

SHEET MH103
122 OF 176

STATE OF LOUISIANA
LICENSED PROFESSIONAL ENGINEER
05/20/26

J:\greenwood\2025 Jobs\5825 USDA Sugarcane Research Lab Houma LA\07 Working Folder\Mech\MH103.dwg
May 19, 2026 - 7:32pm

KEYED NOTES

1. DUCT PENETRATION LOCATIONS MUST BE COORDINATED IN A WAY TO AVOID STRUCTURAL COMPONENTS. CONCRETE FLOORING PENETRATION MUST BE PRECAST AND CONTAIN A BUILT UP CURB AROUND THE DUCTWORK TO PROTECT THE FIRST FLOOR FROM ANY SPILLS THAT MAY OCCUR IN THE MECHANICAL ROOM.

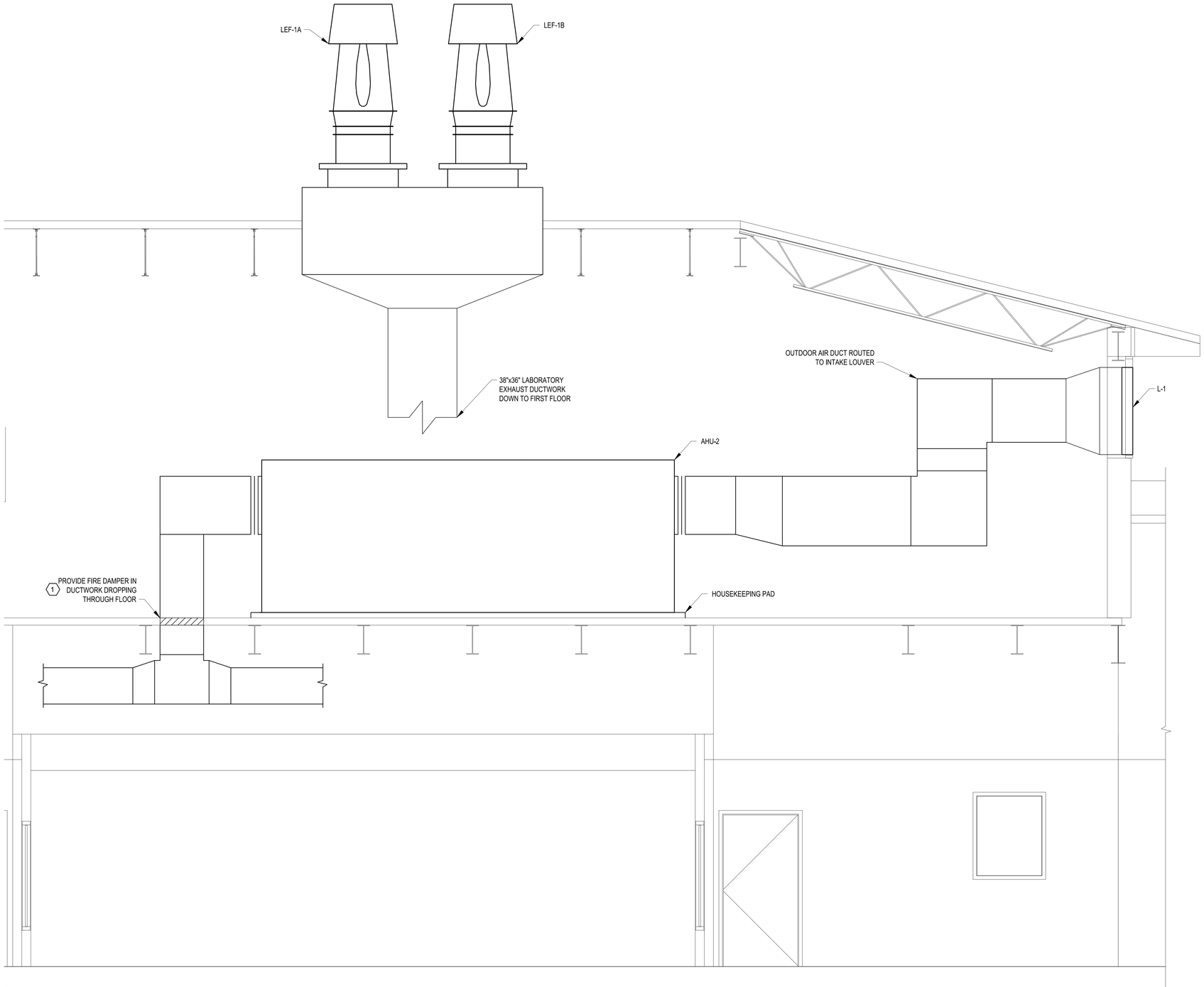

1 MH201 HAVC ELEVATION
SCALE: 1/8"=1'-0"

PLAN NORTH TRUE NORTH

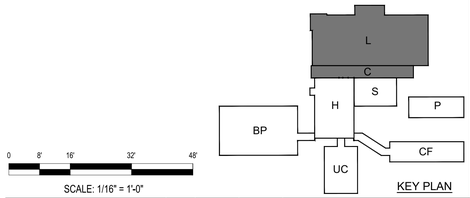

0 8' 16' 32' 48'
SCALE: 1/16" = 1'-0"

KEY PLAN

NO.	DATE	BY	DESCRIPTION

REVISIONS

Johnson McAdams
ARCHITECTS ENGINEERS PLANNING SURVEYING MANAGEMENT
P.O. BOX 615 GREENWOOD, MISSISSIPPI 38602-0615

A-E FIRM	USDA
PROJECT MANAGER REH	EPM WN
DESIGNER SME	PPM XXX
CHECKED BY DRL	SAFETY & HEALTH CM
JOB # 5825	REAL PROPERTY JS

USDA Agricultural Research Service

USDA AGRICULTURAL RESEARCH SERVICE
SUGARCANE RESEARCH LABORATORY
HOUMA, LOUISIANA

MECHANICAL HVAC ELEVATION

PROJECT NO. XXX
DATE 05/20/2026

AGRICULTURAL RESEARCH SERVICE
FACILITIES ENGINEERING BRANCH
5106 SUNNYSIDE AVENUE
BELTSVILLE, MD 20705-5100

SHEET MH201
123 OF 176

STATE OF LOUISIANA
DANIEL W. ENGLE
LICENSED PROFESSIONAL ENGINEER
05/20/26
PROFESSIONAL ENGINEER

J:\greenwood\2025 Jobs\5825 USDA Sugarcane Research Lab Houma LA\07 Working Folder\Mech\MH201.dwg
May 19, 2026 - 7:31pm

KEYED NOTES

1. ROUTE DUCTWORK UP ABOVE STRUCTURE TO SERVE ROOM 1056 AND 1051 WITH RAISED CEILING HEIGHTS. COORDINATE DUCT HEIGHT AND LOCATION WITH STRUCTURAL COMPONENT.

ROOM LEGEND

ROOM NO	ROOM NAME
1002	STORAGE
1003	STORAGE
1004	MEETING ROOM
1007	CORRIDOR
1008	CORRIDPOR
1009	WOMEN
1050	MAIL / WORK ROOM
1051	ENTRY LOBBY
1052	CORRIDOR
1053	TECH OFFICE
1054	TECH OFFICE
1055	TECH OFFICE
1056	PROGRAM ASSISTANT
1057	RESEARCH LEADER
1058	OFFICE
1059	OFFICE
1060	OFFICE
1061	CORRIDOR

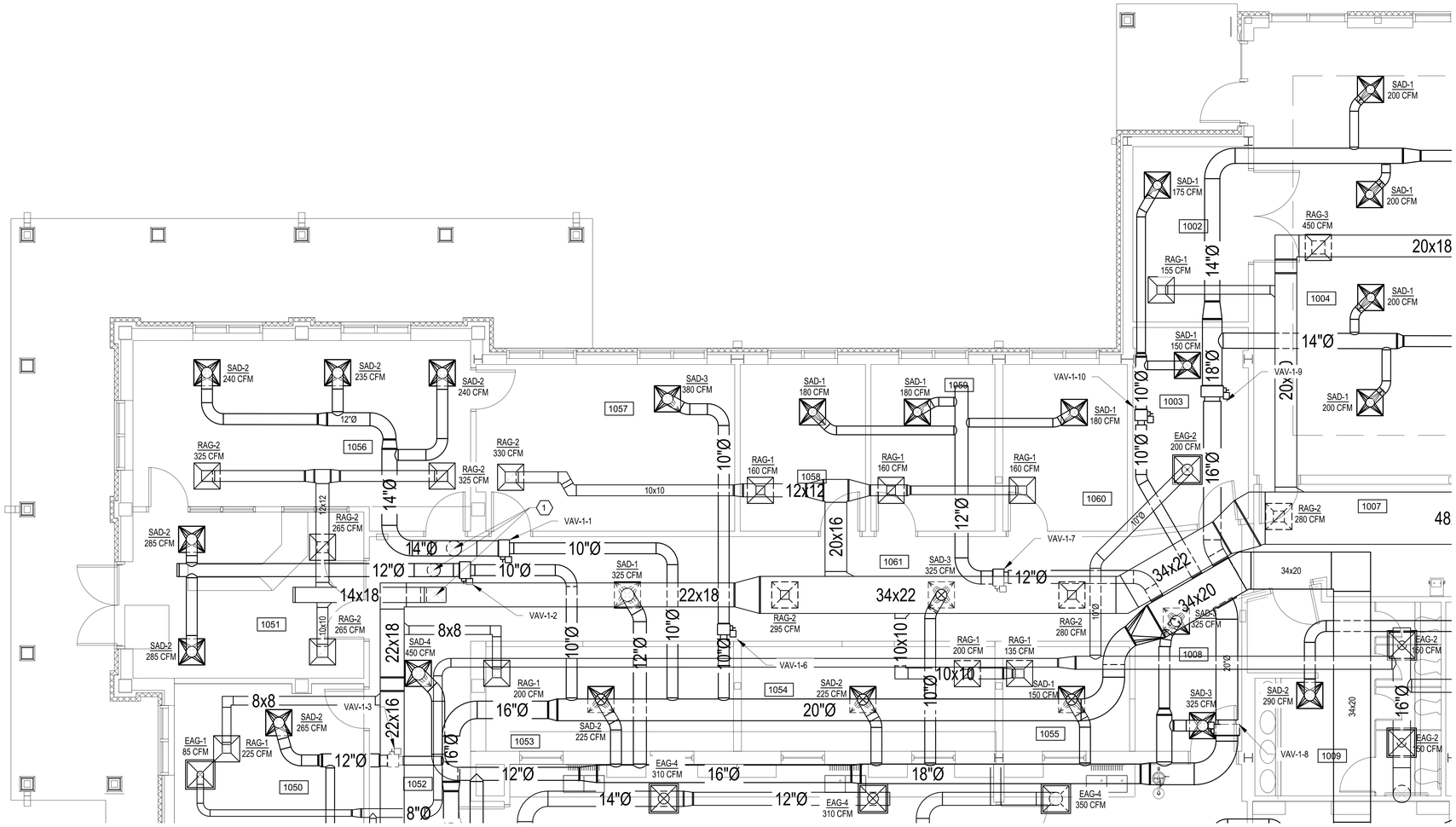

1 MH401 ENLARGED FIRST FLOOR HVAC PLAN
SCALE: 1/8"=1'-0"

PLAN NORTH TRUE NORTH

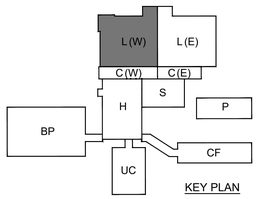

KEY PLAN

0 4' 8' 16' 24'
SCALE: 1/8"= 1'-0"

NO.	DATE	BY	DESCRIPTION

REVISIONS

The Johnson McAdams Firm P.A.
ARCHITECTS/ENGINEERS PLANNERS SURVEYING MANAGEMENT
P.O. BOX 515, GREENWOOD, MISSISSIPPI (662) 455-4943

A-E FIRM	USDA
PROJECT MANAGER REH	EPM WN
DESIGNER SME	PPM XXX
CHECKED BY DRL	SAFETY & HEALTH CM
JOB # 5825	REAL PROPERTY JS

USDA Agricultural Research Service

USDA AGRICULTURAL RESEARCH SERVICE
SUGARCANE RESEARCH LABORATORY
HOUMA, LOUISIANA

MECHANICAL HVAC ENLARGED FIRST FLOOR PLAN

PROJECT NO.	AGRICULTURAL RESEARCH SERVICE FACILITIES ENGINEERING BRANCH 5106 SUNNYSIDE AVENUE BELTSVILLE, MD 20705-5100	SHEET
XXX		MH401
DATE 05/20/2026		124 OF 176

STATE OF LOUISIANA
LARRY M. ENGLE
LICENSED NO. 4424
05/20/26
PROFESSIONAL ENGINEER

J:\greenwood\2025 Jobs\5825 USDA Sugarcane Research Lab Houma LA\07 Working Folder\Mech\MH401.dwg
May 19, 2026 - 7:31pm

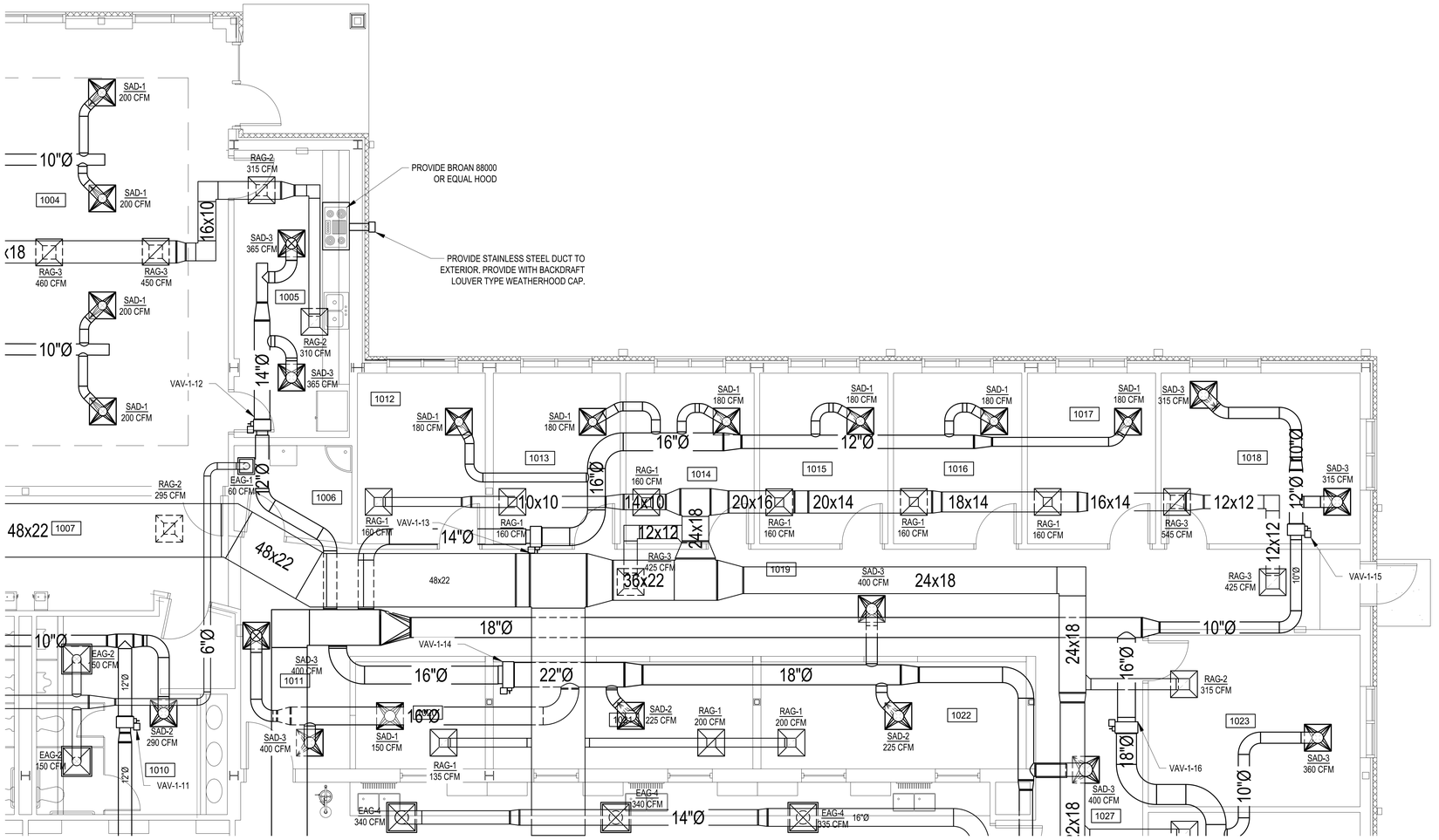

1 MH402 ENLARGED FIRST FLOOR HVAC PLAN
SCALE: 1/8"=1'-0"

PLAN NORTH TRUE NORTH

ROOM LEGEND

ROOM NO	ROOM NAME
1004	MEETING ROOM
1005	PREP
1006	JANITORIAL
1007	CORRIDOR
1010	MEN
1011	CORRIDOR
1012	OFFICE
1013	OFFICE
1014	OFFICE
1015	OFFICE
1016	OFFICE
1017	OFFICE
1018	SMALL CONFERENCE
1019	CORRIDOR
1020	TECH OFFICE
1021	TECH OFFICE
1022	TECH OFFICE
1023	CAT 3 OFFICE
1027	CORRIDOR

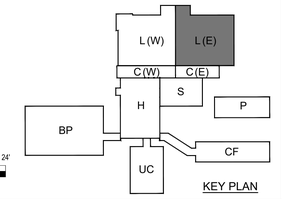

KEY PLAN

0 4' 8' 16' 24'
SCALE: 1/8"= 1'-0"

NO.	DATE	BY	DESCRIPTION

REVISIONS

Johnson, McAdams
ARCHITECTS ENGINEERS PLANNING SURVEYING MANAGEMENT
P.O. BOX 515, GREENWOOD, MISSISSIPPI 38602-0515

USDA Agricultural Research Service

USDA AGRICULTURAL RESEARCH SERVICE
SUGARCANE RESEARCH LABORATORY
HOUMA, LOUISIANA

MECHANICAL HVAC ENLARGED FIRST FLOOR PLAN

A-E FIRM	USDA
PROJECT MANAGER REH	EPM WN
DESIGNER SME	PPM XXX
CHECKED BY DRL	SAFETY & HEALTH CM
JOB # 5825	REAL PROPERTY JS

PROJECT NO. XXX
DATE 05/20/2026

AGRICULTURAL RESEARCH SERVICE
FACILITIES ENGINEERING BRANCH
5106 SUNNYSIDE AVENUE
BELTSVILLE, MD 20705-5100

SHEET MH402
125 OF 176

STATE OF LOUISIANA
DANIEL W. ENGLE
LICENSED PROFESSIONAL ENGINEER
05/20/26

J:\greenwood\2025 Jobs\5825 USDA Sugarcane Research Lab Houma LA\07 Working Folder\Mech\MH402.dwg
May 19, 2026 - 7:31pm

ROOM LEGEND

ROOM NO	ROOM NAME
1009	WOMEN
1035	SCOPE
1038	SUPPORT
1039	STORAGE
1041	SERVICE / UTILITY CORRIDOR
1042	HALL
1043	BSL-2 LABORATORY
1044	SUPPORT
1045	PATHOLOGY / MOLECULAR GENETICS (CLEAN)
1046	PATHOLOGY / MOLECULAR GENETICS (DIRTY)
1047	FILES
1048	BREAK ROOM
1049	POST-DOC / TECHICAL OFFICE
1050	MAIL / WORK ROOM
1052	CORRIDOR

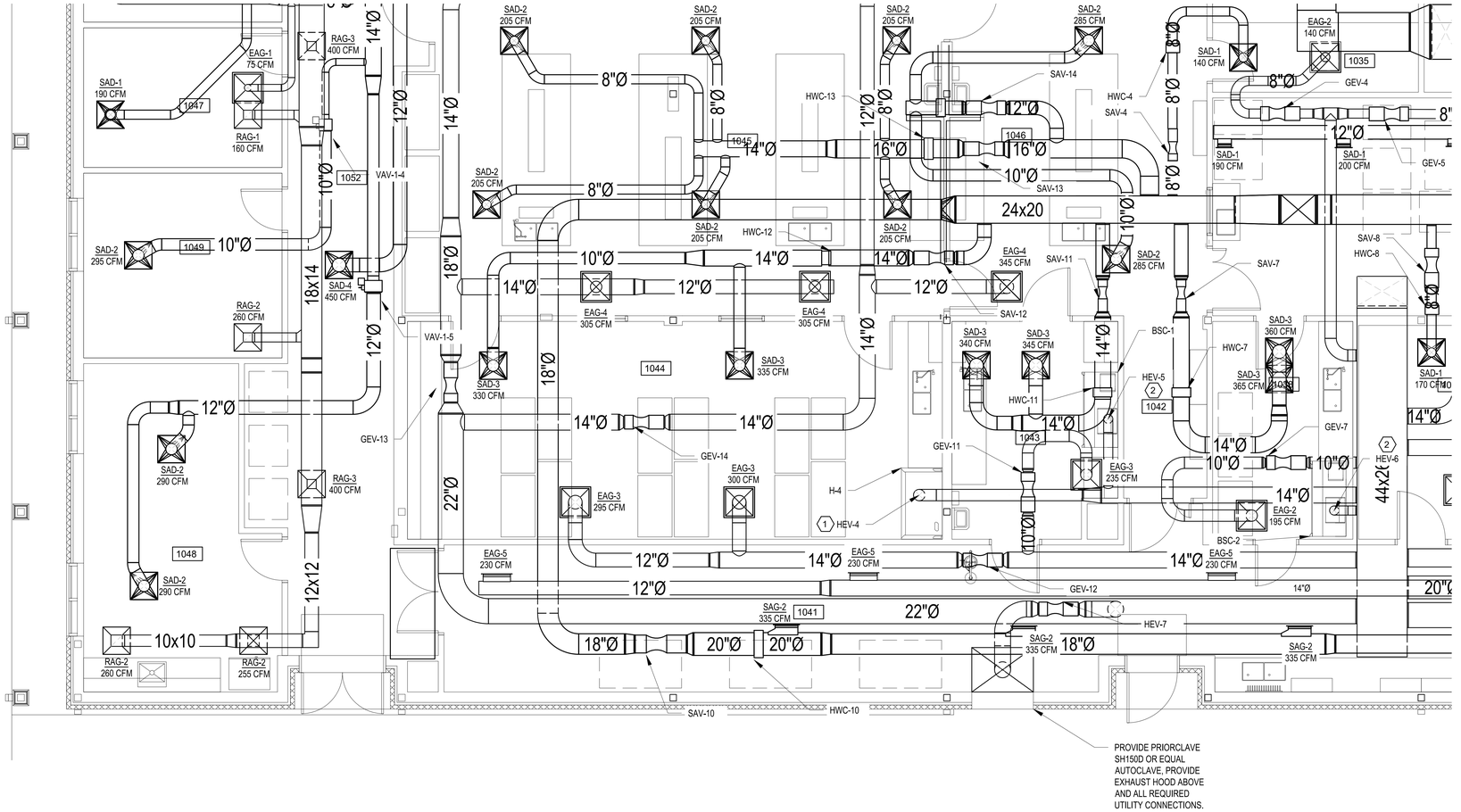

1 MH403 ENLARGED FIRST FLOOR HVAC PLAN

SCALE: 1/8"=1'-0"

PLAN NORTH

TRUE NORTH

KEYED NOTES

1. PROVIDE HOOD EXHAUST VALVE IN VERTICAL DUCTWORK DOWN TO FUME HOOD. PROVIDE VALVE WITH MANUFACTURER RECOMMENDED DISTANCES BEFORE AND AFTER IN STRAIGHT DUCTWORK TO ALLOW FOR PROPER AIRFLOW MONITORING.
2. PROVIDE EXHAUST VALVE IN VERTICAL DUCTWORK DOWN TO BIOLOGICAL SAFETY CABINET. PROVIDE WITH MANUFACTURER PROVIDED EXHAUST THIMBLE CONNECTION. PROVIDE VALVE WITH MANUFACTURER RECOMMENDED DISTANCES BEFORE AND AFTER IN STRAIGHT DUCTWORK TO ALLOW FOR PROPER AIRFLOW MONITORING.

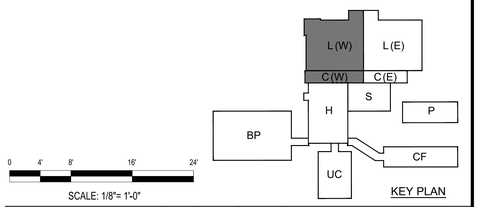

0 4' 8' 16' 24'

SCALE: 1/8"= 1'-0"

KEY PLAN

NO.	DATE	BY	DESCRIPTION

REVISIONS

Johnson Mˢ Adams PSM P.A.
ARCHITECTS/ENGINEERS PLANNERS SURVEYING MANAGEMENT
P.O. BOX 513, GREENWOOD, MISSISSIPPI - (662) 455-6423

A-E FIRM	USDA
PROJECT MANAGER	REH
EPM	WN
DESIGNER	SME
PPM	XXX
CHECKED BY	DRL
SAFETY & HEALTH	CM
JOB #	5825
REAL PROPERTY	JS

STATE OF LOUISIANA
RANDEL W. ENGLE
LICENSED No. 37746
05/20/26
PROFESSIONAL ENGINEER

USDA

USDA Agricultural Research Service

04/03/2026
SUGARCANE RESEARCH LABORATORY
HOUMA, LOUISIANA

MECHANICAL HVAC ENLARGED FIRST FLOOR PLAN

PROJECT NO.	XXX
DATE	05/20/2026

AGRICULTURAL RESEARCH SERVICE
FACILITIES ENGINEERING BRANCH
5106 SUNNYSIDE AVENUE
BELTSVILLE, MD 20705-5100

SHEET MH403

126 OF 176

J:\greenwood\2025 Jobs\5825 USDA Sugarcane Research Lab Houma LA\07 Working Folder\Mech\MH403.dwg
May 19, 2026 - 2:53pm

KEYED NOTES

1. PROVIDE HOOD EXHAUST VALVE IN VERTICAL DUCTWORK DOWN TO LABORATORY EQUIPMENT SHOWN. PROVIDE VALVE WITH MANUFACTURER RECOMMENDED DISTANCES BEFORE AND AFTER IN STRAIGHT DUCTWORK TO ALLOW FOR PROPER AIRFLOW MONITORING.

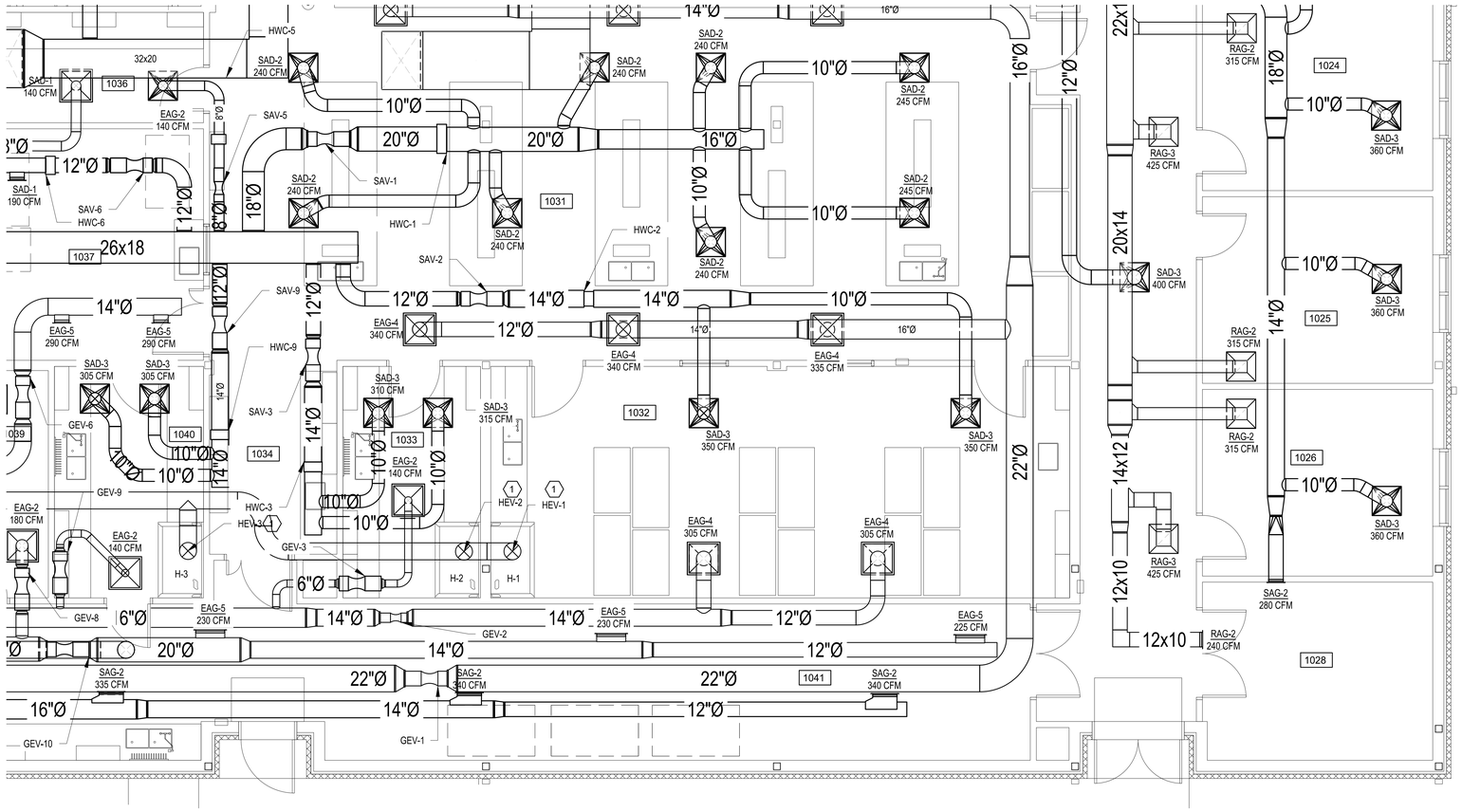

1 MH404 ENLARGED FIRST FLOOR HVAC PLAN
SCALE: 1/8"=1'-0"

PLAN NORTH TRUE NORTH

ROOM LEGEND

ROOM NO	ROOM NAME
1024	CAT 3 OFFICE
1025	TECHNICIAN OFFICE
1026	TECHNICIAN OFFICE
1027	CORRIDOR
1028	STORAGE
1031	PLANT PHYSIOLOGY / SOILS
1032	SUPPORT
1033	SUPPORT
1034	HALL
1036	SCOPE
1037	SHARED EQUIPMENT ROOM
1039	STORAGE
1040	SUPPORT
1041	SERVICE / UTILITY CORRIDOR

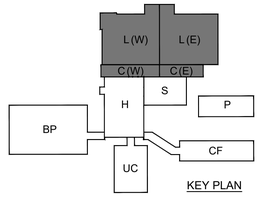

KEY PLAN

0 4' 8' 16' 24'
SCALE: 1/8"= 1'-0"

NO.	DATE	BY	DESCRIPTION

REVISIONS

Johnson McAdams
PROFESSIONAL ENGINEERS PLANNERS SURVEYING MANAGEMENT
P.O. BOX 513, GREENWOOD, MISSISSIPPI 38930 (662) 455-6943

A-E FIRM	USDA
PROJECT MANAGER REH	EPM WN
DESIGNER SME	PPM XXX
CHECKED BY DRL	SAFETY & HEALTH CM
JOB # 5825	REAL PROPERTY JS

USDA Agricultural Research Service

USDA AGRICULTURAL RESEARCH SERVICE
SUGARCANE RESEARCH LABORATORY
HOUMA, LOUISIANA

MECHANICAL HVAC ENLARGED FIRST FLOOR PLAN

PROJECT NO. XXX
DATE 05/20/2026

AGRICULTURAL RESEARCH SERVICE
FACILITIES ENGINEERING BRANCH
5106 SUNNYSIDE AVENUE
BELTSVILLE, MD 20705-5100

SHEET MH404
127 OF 176

STATE OF LOUISIANA
DANIEL M. ENGLE
LICENSED PROFESSIONAL ENGINEER
05/20/26
PROFESSIONAL ENGINEER

J:\greenwood\2025 Jobs\5825 USDA Sugarcane Research Lab Houma LA\07 Working Folder\Mech\MH404.dwg
May 19, 2026 - 7:31pm

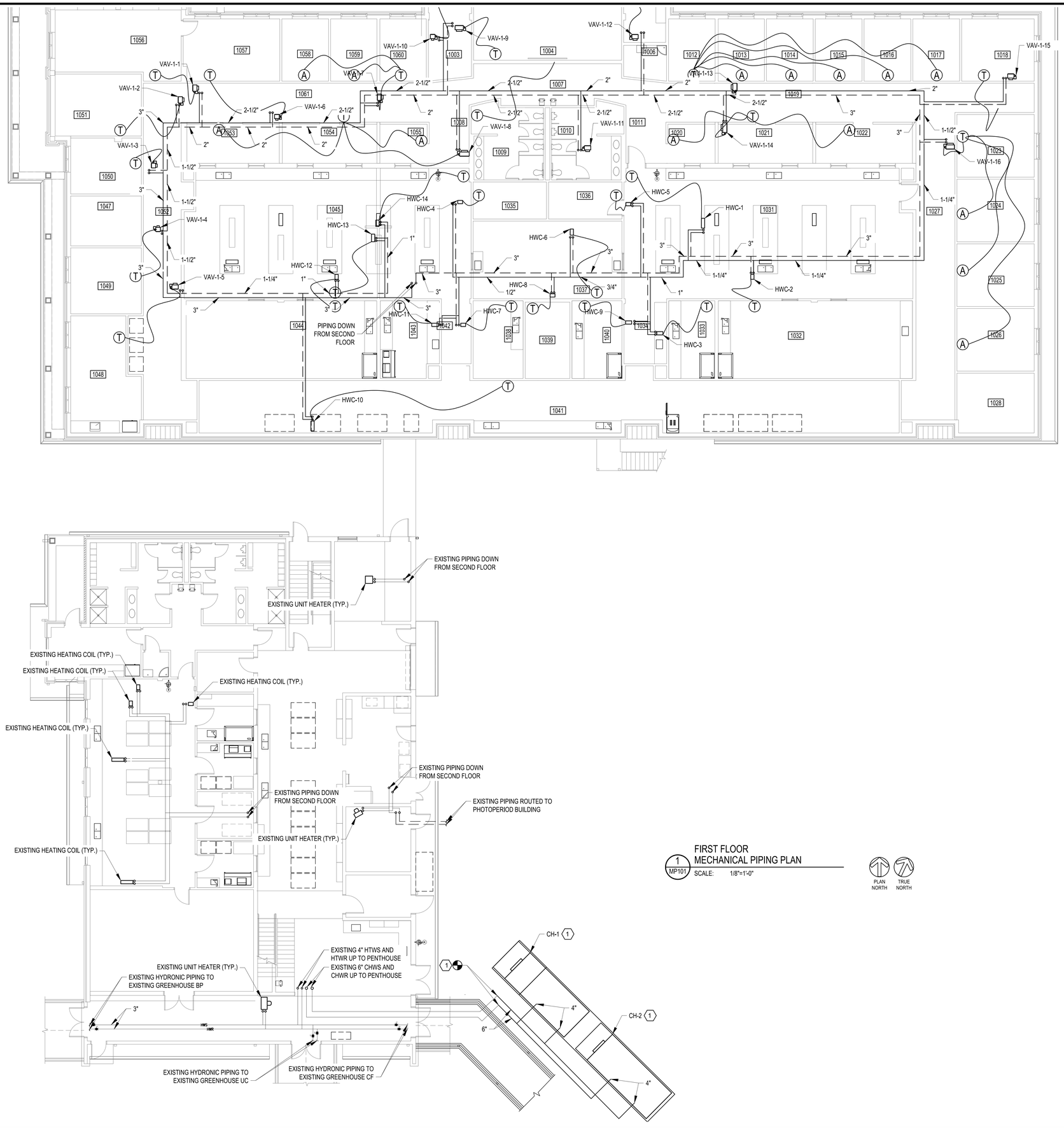

1 MP101 FIRST FLOOR MECHANICAL PIPING PLAN

SCALE: 1/8"=1'-0"

PLAN NORTH TRUE NORTH

KEYED NOTES

1. PROVIDE AIR COOLED CHILLER ON EXISTING EQUIPMENT PAD. ENLARGE EXISTING EQUIPMENT PAD IF NEW CHILLER IS LARGER THAN EXISTING. MATCH EXISTING CONCRETE CONSTRUCTION AND THICKNESS. MODIFY/ EXTEND EXISTING PIPING AS NEEDED FOR CONNECTION TO NEW CHILLER.

GENERAL NOTES

1. PROVIDE ALUMINUM JACKETING ON ALL EXTERIOR CHILLED WATER PIPING.

LEGEND

- POINT OF DEMOLITION
- T THERMOSTAT
- A ROOM SETPOINT ADJUSTMENT

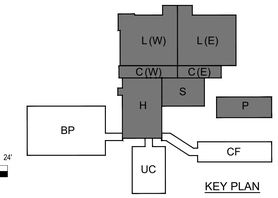

KEY PLAN

0 4' 8' 16' 24'

SCALE: 1/8"= 1'-0"

NO.	DATE	BY	DESCRIPTION

REVISIONS

Johnson, M'Adams

A-E FIRM	USDA
PROJECT MANAGER REH	EPM WN
DESIGNER SME	PPM XXX
CHECKED BY DRL	SAFETY & HEALTH CM
JOB # 5825	REAL PROPERTY JS

USDA Agricultural Research Service

USDA AGRICULTURAL RESEARCH SERVICE
SUGARCANE RESEARCH LABORATORY
HOUMA, LOUISIANA

FIRST FLOOR
MECHANICAL PIPING PLAN

PROJECT NO.	AGRICULTURAL RESEARCH SERVICE FACILITIES ENGINEERING BRANCH 5106 SUNNYSIDE AVENUE BELTSVILLE, MD 20705-5100	SHEET
XXX		MP101
DATE 05/20/2026		128 OF 176

STATE OF LOUISIANA
LANDEL M. ENGLE
LICENSE NO. 14-22
05/20/26
PROFESSIONAL ENGINEER

J:\greenwood\2025 Jobs\5825 USDA Sugarcane Research Lab Houma LA\07 Working Folder\Mech\MP101.dwg
May 19, 2026 - 7:31pm

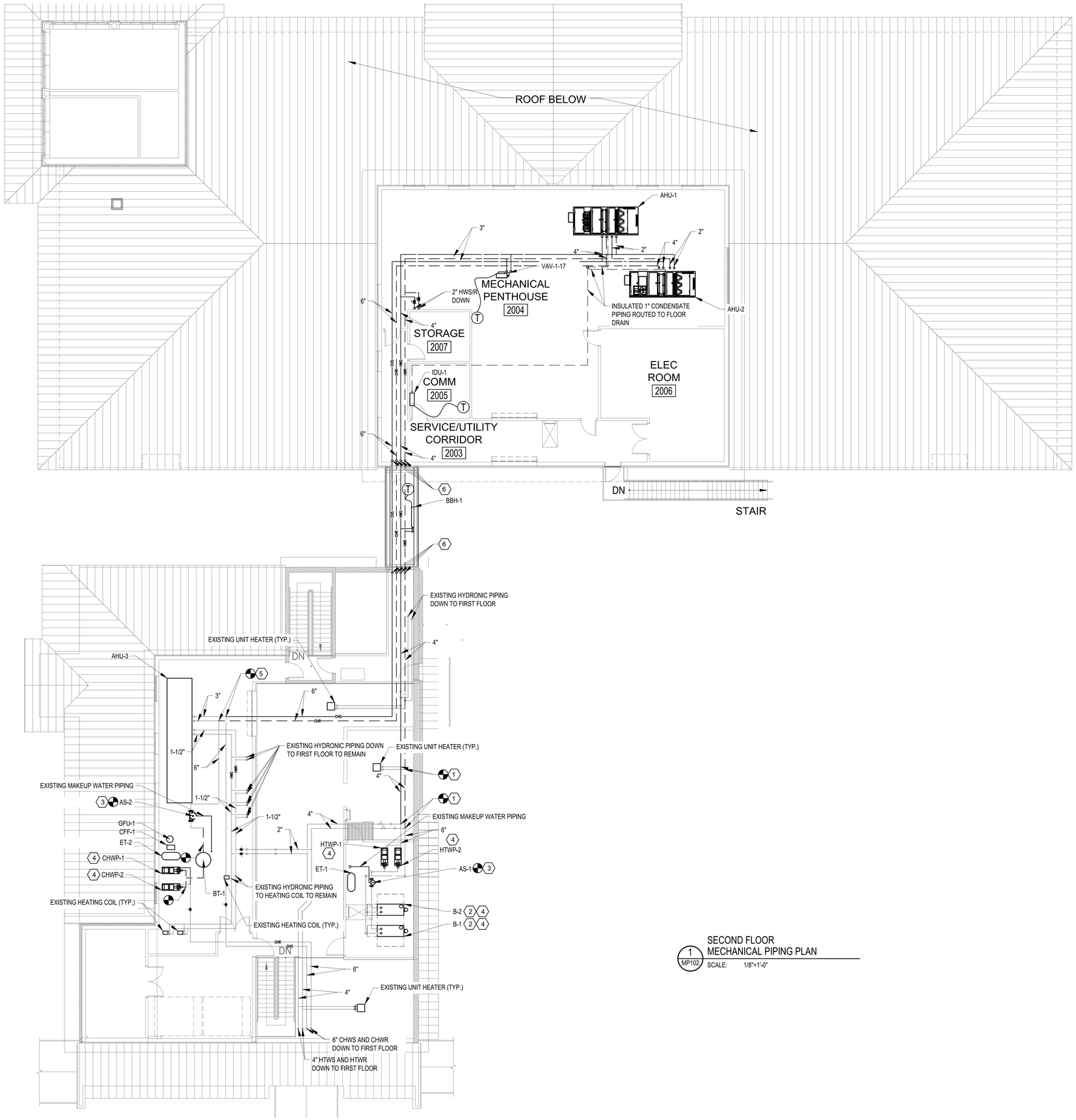

1 MP102 SECOND FLOOR MECHANICAL PIPING PLAN

SCALE: 1/8"=1'-0"

KEYED NOTES

1. PROVIDE PIPING, HANGERS, INSULATION, AND ALL APPURTENANCES. RECONNECT EXISTING CAPPED PIPING.
2. PROVIDE BOILER, EQUIPMENT PAD, FLUE AND VENT, AND ALL APPURTENANCES. ROUTE FLUE AND VENT TO EXISTING CAPPED CONNECTIONS. CONTRACTOR MUST ENSURE THAT EXISTING FLUE MATERIAL AND DESIGN IS COMPATIBLE WITH SCHEDULED BOILERS.
3. ROUTE PIPING TO EXISTING AIR SEPARATOR.
4. PROVIDE CONNECTION TO EXISTING TEMPORARILY CAPPED PIPING.
5. ROUTE 6" CHILLED WATER SUPPLY AND RETURN TO SERVE AHU-1 AND AHU-2.
6. ROUTE PIPING DOWN TO PIPING CHASE BELOW BRIDGE. SEE PLUMBING DETAIL SECTION 4/P-503.

GENERAL NOTES

1. ALL CONDENSATE PIPING LOCATED INSIDE THE BUILDING ENVELOPE MUST BE INSULATED AND SLOPPED TO ALLOW FOR GRAVITY DRAINAGE.
2. THE EXISTING HEATING WATER AND CHILLED WATER SYSTEMS MUST REMAIN FULLY OPERATIONAL THROUGHOUT CONSTRUCTION. IF THE EXISTING SYSTEM IS REQUIRED TO BE TAKEN OUT OF SERVICE AT ANY TIME, THE CONTRACTOR MUST PROVIDE A TEMPORARY SYSTEM TO MAINTAIN CONTINUOUS SERVICE, OR OBTAIN PRIOR APPROVAL FOR A SCHEDULED DOWNTIME WINDOW. ALL PROPOSED OR ESTIMATED DOWNTIME MUST BE COORDINATED IN ADVANCE AND RECEIVE WRITTEN APPROVAL FROM THE GOVERNMENT PRIOR TO IMPLEMENTATION. THE CONTRACTOR IS RESPONSIBLE FOR PROTECTING ALL COMPONENTS AND FUNCTIONS OF ALL EXISTING SYSTEM THROUGHOUT ALL PHASES OF CONSTRUCTION. ANY DAMAGE OR INTERRUPTION TO THE SYSTEM RESULTING FROM THE CONTRACTOR'S OPERATIONS MUST BE REPAIRED OR REPLACED AT NO ADDED COST TO THE GOVERNMENT.

LEGEND

- POINT OF CONNECTION
- (T) THERMOSTAT

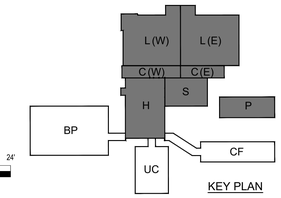

KEY PLAN

0 4' 8' 16' 24'

SCALE: 1/8"= 1'-0"

NO.	DATE	BY	DESCRIPTION

REVISIONS

Johnson McAdams PLLC — MECHANICAL ENGINEERING PLANNING SURVEYING BUSINESS DIST. P.O. BOX 513, GREENWOOD, MISSISSIPPI - (662) 455-6543

STATE OF LOUISIANA — DANIEL R. MCADAMS — 32911 — REGISTERED PROFESSIONAL ENGINEER — 05/20/26

A-E FIRM	USDA
PROJECT MANAGER	REH
EPM	WN
DESIGNER	SME
PPM	XXX
CHECKED BY	DRL
SAFETY & HEALTH	CM
JOB #	5825
REAL PROPERTY	JS

USDA Agricultural Research Service

USDA AGRICULTURAL RESEARCH SERVICE
SUGARCANE RESEARCH LABORATORY
HOUMA, LOUISIANA

SECOND FLOOR MECHANICAL PIPING PLAN

PROJECT NO.	XXX
DATE	05/20/2026

AGRICULTURAL RESEARCH SERVICE
FACILITIES ENGINEERING BRANCH
5106 SUNNYSIDE AVENUE
BELTSVILLE, MD 20705-5100

SHEET MP102

J:\greenwood\2025 Jobs\5825 USDA Sugarcane Research Lab Houma LA\07 Working Folder\Mech\MP102.dwg
May 19, 2026 - 7:39pm

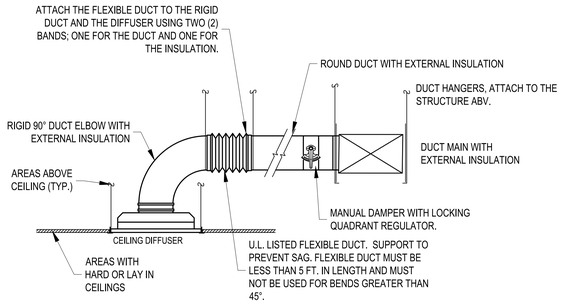

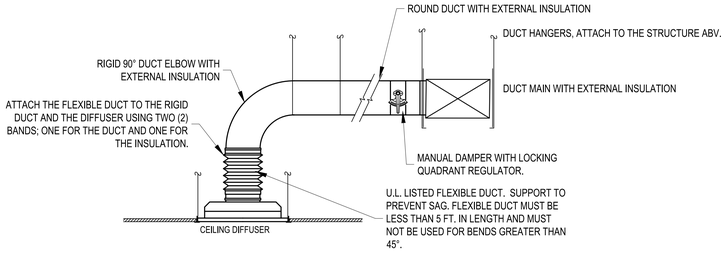

1 M-501 TYPICAL DIFFUSER CONNECTION DETAIL
SCALE: N.T.S

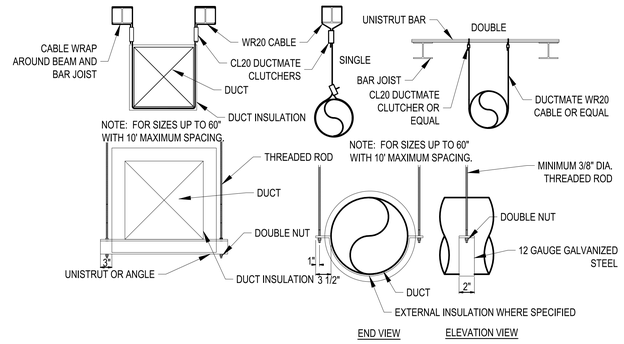

NOTE: SEMI-CIRCLE HANGER. 61"-72" DIAMETER WITH 10' MAXIMUM SPACING.

DUCT SIZE (IN.)	STRUT SIZE	ANGLE SIZE	ROD SIZE
61-72	1 5/8 X 1 5/8 X 12 GA	N/A	3/8
72-84	N/A	2 X 2 X 1/4	3/8
85-96	N/A	2 1/2 X 2 1/2 X 1/4	3/8
97-120	N/A	3 X 3 X 1/4	3/8

NOTE: 10' MAXIMUM SPACING.

2 M-501 DUCT HANGER DETAILS
SCALE: N.T.S

NOTE:
DAMPERS SHALL BE PROVIDED IN ALL BRANCH RUN-OUTS TO DIFFUSERS, R.A AND EXHAUST GRILLES, UNLESS SPECIFICALLY NOTED OTHERWISE ON DRAWINGS.
LOCATE DAMPERS SO THEY ARE ACCESSIBLE FROM LAY-IN CEILING OR ACCESS DOORS.

PROVIDE MANUAL OPPOSED DAMPER IN EACH BRANCH LINE UNLESS OTHERWISE NOTED ON DRAWINGS. DAMPERS SHALL BE INSTALLED IN ACCESSIBLE LOCATION NEAR TRUNK DUCT AND MINIMUM OF 5'-0" FROM ANY AIR INLET OR OUTLET DEVICE. COORDINATE W/ ACCESS DOORS IN NON-ACCESSIBLE CEILINGS.

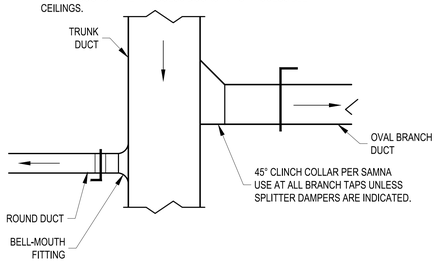

3 M-501 BRANCH DUCT TAP DETAIL
SCALE: N.T.S

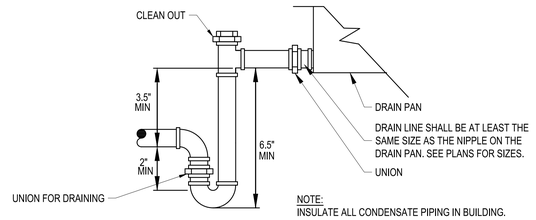

NOTE:
INSULATE ALL CONDENSATE PIPING IN BUILDING.

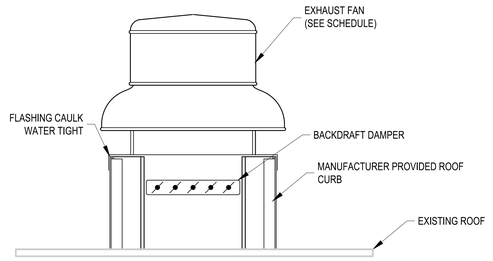

4 M501 ROOF MOUNTED EXHAUST FAN DETAIL
SCALE: N.T.S

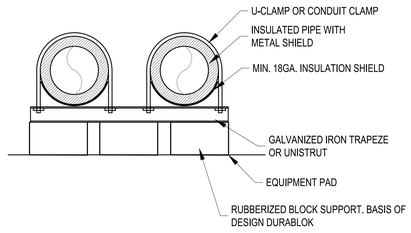

6 M-501 EQUIPMENT PAD PIPING SUPPORT DETAIL
SCALE: N.T.S

PIPE PENETRATION NOTES:
1. PROVIDE PITCH POCKET CONSTRUCTION, ADDITIONAL FLASHING, OR WEATHER CAP AS REQUIRED FOR WATERPROOF CONSTRUCTION. DO NOT MECHANICALLY ATTACH PIPE TO STRUCTURE IN ANY WAY.
2. SPACE BETWEEN PIPE AND SLEEVE SHALL BE FREE OF ANY FOREIGN MATERIALS.
3. PIPE SHALL NOT CONTACT STRUCTURE AT ANY TIME. WEDGES ARE NOT BE USED TO MAINTAIN PIPE POSITION.
4. PIPE MUST BE APPROXIMATELY CENTERED IN OPENING.

7 M-501 PIPE PENETRATION DETAIL
SCALE: N.T.S

8 M-501 DUCT DEPRESSION FOR STRUCURAL CONFLICTS DETAIL
SCALE: N.T.S

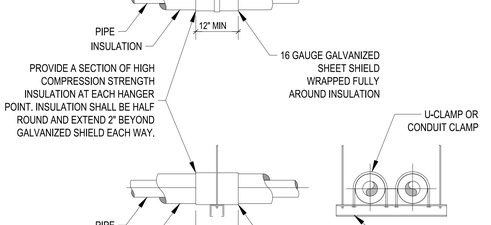

12 M-501 CLEVIS HANGER DETAIL
SCALE: N.T.S

13 M-501 PIPE HANGER DETAILS
SCALE: N.T.S

5 M-501 CONDENSATE DRAIN P-TRAP DETAIL
SCALE: N.T.S

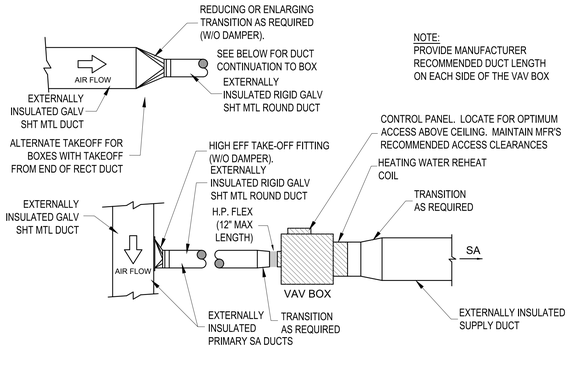

NOTE:
PROVIDE MANUFACTURER RECOMMENDED DUCT LENGTH ON EACH SIDE OF THE VAV BOX

9 M-501 SINGLE DUCT VAV BOX DETAIL
SCALE: N.T.S

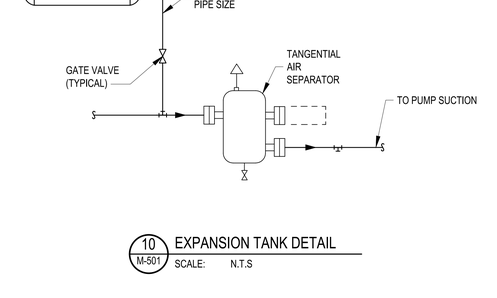

10 M-501 EXPANSION TANK DETAIL
SCALE: N.T.S

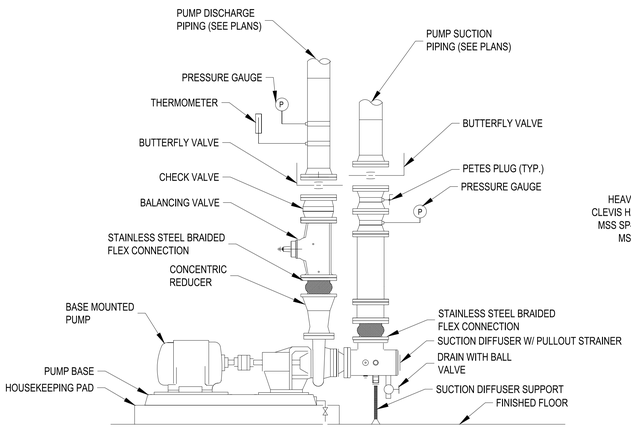

11 M-501 BASE MOUNTED PUMP DETAIL
SCALE: N.T.S

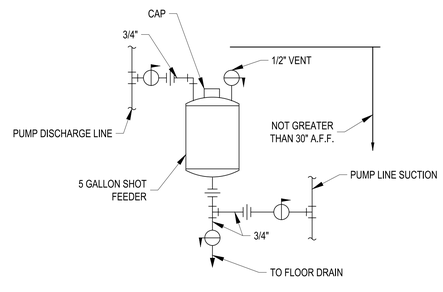

14 M-501 CHEMICAL FILTER FEEDER DETAIL (CFF-1)
SCALE: N.T.S

NO.	DATE	BY	DESCRIPTION
			REVISIONS

A-E FIRM	USDA
PROJECT MANAGER	EPM
REH	WN
DESIGNER	PPM
SME	XXX
CHECKED BY	SAFETY & HEALTH
DRL	CM
JOB #	REAL PROPERTY
5825	JS

USDA Agricultural Research Service
USDA AGRICULTURAL RESEARCH SERVICE
SUGARCANE RESEARCH LABORATORY
HOUMA, LOUISIANA
MECHANICAL DETAILS

PROJECT NO.	AGRICULTURAL RESEARCH SERVICE FACILITIES ENGINEERING BRANCH 5106 SUNNYSIDE AVENUE BELTSVILLE, MD 20705-5100	SHEET
XXX		M-501
DATE		130 OF 176
05/20/2026		

STATE OF LOUISIANA — DANIEL R. LEMOINE — 05/20/26 — PROFESSIONAL ENGINEER

J:\greenwood\2025 Jobs\5825 USDA Sugarcane Research Lab Houma LA\07 Working Folder\Mech\M-501.dwg
May 19, 2026 - 2:29pm

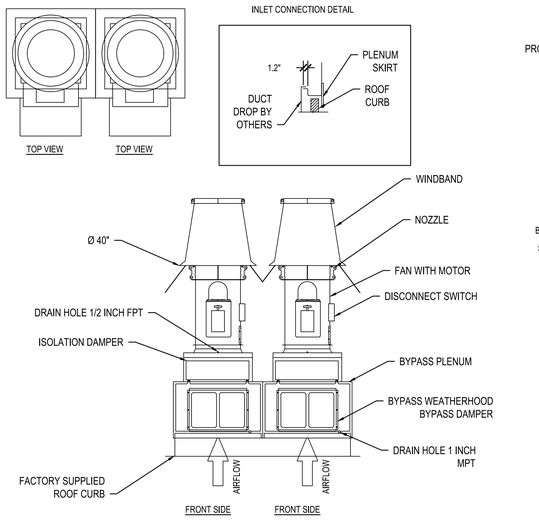

1 M-502 LAB EXHAUST FAN DETAIL (LEF-X)
SCALE: N.T.S

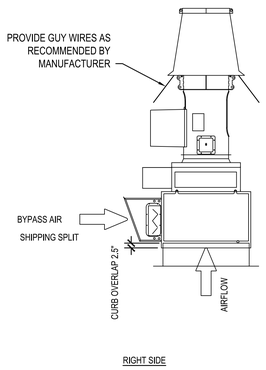

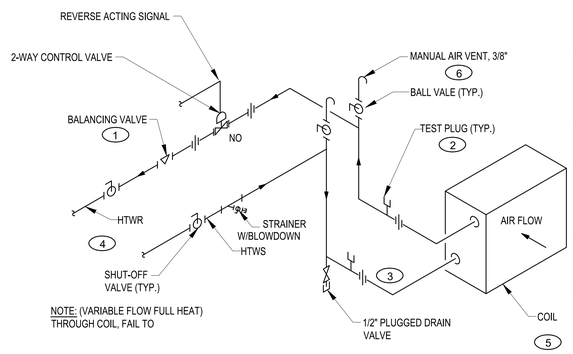

NOTE: (VARIABLE FLOW FULL HEAT) THROUGH COIL, FAIL TO

2 M-502 2-WAY HEATING WATER COIL DETAIL
SCALE: N.T.S

KEYED NOTES

1. INSTALL CIRCUIT SETTER BALANCING VALVE WITH MINIMUM OF 3 STRAIGHT PIPE DIAMETERS UPSTREAM AND 1 STRAIGHT PIPE DIAMETER DOWNSTREAM.
2. MAINTAIN 6" MINIMUM CLEARANCE ABOVE TEST PLUG TO ALLOW GAUGE TO BE INSERTED. DO NOT COVER PLUG WITH INSULATION.
3. INSTALL SWING JOINTS AT COIL CONNECTIONS.
4. CONNECT BRANCH LINES FROM COIL INTO TOP OR SIDE OF SUPPLY AND RETURN MAINS. CONNECTING INTO BOTTOM OF MAIN IS NOT ACCEPTABLE.
5. PROVIDE COILS WITH INLET STRAINERS AND CAPPED HOSE CONNECTION BLOW DOWN VALVES.
6. INSTALL MANUAL AIR VENTS IN SUPPLY AND RETURN COIL BRANCH PIPING AS FOLLOWS:

A) IN PIPING HIGH POINT WHEN PIPING IS ABOVE MAIN.

B) CLOSE TO COIL WHEN PIPING IS NOT ABOVE MAIN (SIDE CONNECTION).

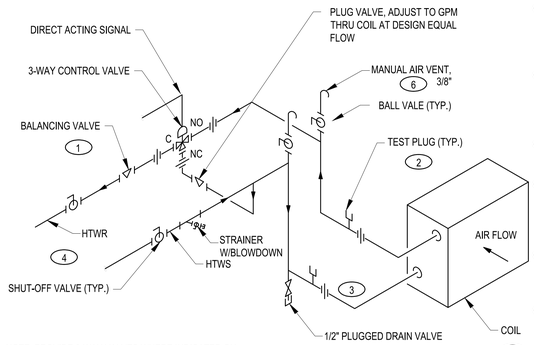

NOTE: PROVIDE 3-WAY VALVES WHERE INDICATED ON PIPING DIAGRAMS. 2-WAY CONTROL VALVES MUST BE PROVIDED IN ALL LOCATIONS WHERE 3-WAY VALVES ARE NOT INDICATED.

KEYED NOTES

1. INSTALL CIRCUIT SETTER BALANCING VALVE WITH MINIMUM OF 3 STRAIGHT PIPE DIAMETERS UPSTREAM AND 1 STRAIGHT PIPE DIAMETER DOWNSTREAM.
2. MAINTAIN 6" MINIMUM CLEARANCE ABOVE TEST PLUG TO ALLOW GAUGE TO BE INSERTED. DO NOT COVER PLUG WITH INSULATION.
3. INSTALL SWING JOINTS AT COIL CONNECTIONS.
4. CONNECT BRANCH LINES FROM COIL INTO TOP OR SIDE OF SUPPLY AND RETURN MAINS. CONNECTING INTO BOTTOM OF MAIN IS NOT ACCEPTABLE.
5. PROVIDE COILS WITH INLET STRAINERS AND CAPPED HOSE CONNECTION BLOW DOWN VALVES.
6. INSTALL MANUAL AIR VENTS IN SUPPLY AND RETURN COIL BRANCH PIPING AS FOLLOWS:

A) IN PIPING HIGH POINT WHEN PIPING IS ABOVE MAIN.

B) CLOSE TO COIL WHEN PIPING IS NOT ABOVE MAIN (SIDE CONNECTION).

3 M-502 3-WAY HEATING WATER COIL DETAIL
SCALE: N.T.S

4 M-502 TYPICAL RETURN / EXHAUST GRILL CONNECTION
SCALE: N.T.S

5 M-502 2-WAY CHILLED WATER COIL DETAIL
SCALE: N.T.S

KEYED NOTES

1. INSTALL CIRCUIT SETTER BALANCING VALVE WITH MINIMUM OF 3 STRAIGHT PIPE DIAMETERS UPSTREAM AND 1 STRAIGHT PIPE DIAMETER DOWNSTREAM.
2. MAINTAIN 6" MINIMUM CLEARANCE ABOVE TEST PLUG TO ALLOW GAUGE TO BE INSERTED. DO NOT COVER PLUG WITH INSULATION.
3. INSTALL SWING JOINTS AT COIL CONNECTIONS.
4. CONNECT BRANCH LINES FROM COIL INTO TOP OR SIDE OF SUPPLY AND RETURN MAINS. CONNECTING INTO BOTTOM OF MAIN IS NOT ACCEPTABLE.
5. PROVIDE COILS WITH INLET STRAINERS AND CAPPED HOSE CONNECTION BLOW DOWN VALVES.
6. INSTALL MANUAL AIR VENTS IN SUPPLY AND RETURN COIL BRANCH PIPING AS FOLLOWS:

A) IN PIPING HIGH POINT WHEN PIPING IS ABOVE MAIN.

B) CLOSE TO COIL WHEN PIPING IS NOT ABOVE MAIN (SIDE CONNECTION).

NOTE: PROVIDE 3-WAY VALVES WHERE INDICATED ON PIPING DIAGRAMS. 2-WAY CONTROL VALVES MUST BE PROVIED IN ALL LOCATIONS WHERE 3-WAY VALVES ARE NOT INDICATED

KEYED NOTES

1. INSTALL CIRCUIT SETTER BALANCING VALVE WITH MINIMUM OF 3 STRAIGHT PIPE DIAMETERS UPSTREAM AND 1 STRAIGHT PIPE DIAMETER DOWNSTREAM.
2. MAINTAIN 6" MINIMUM CLEARANCE ABOVE TEST PLUG TO ALLOW GAUGE TO BE INSERTED. DO NOT COVER PLUG WITH INSULATION.
3. INSTALL SWING JOINTS AT COIL CONNECTIONS.
4. CONNECT BRANCH LINES FROM COIL INTO TOP OR SIDE OF SUPPLY AND RETURN MAINS. CONNECTING INTO BOTTOM OF MAIN IS NOT ACCEPTABLE.
5. PROVIDE COILS WITH INLET STRAINERS AND CAPPED HOSE CONNECTION BLOW DOWN VALVES.
6. INSTALL MANUAL AIR VENTS IN SUPPLY AND RETURN COIL BRANCH PIPING AS FOLLOWS:

A) IN PIPING HIGH POINT WHEN PIPING IS ABOVE MAIN.

B) CLOSE TO COIL WHEN PIPING IS NOT ABOVE MAIN (SIDE CONNECTION).

6 M-502 3-WAY CHILLED WATER COIL DETAIL
SCALE: N.T.S

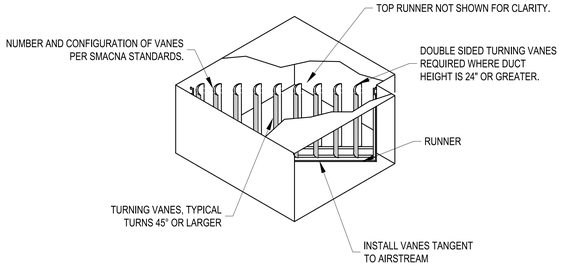

7 M-502 TURNING VANE DETAIL
SCALE: N.T.S

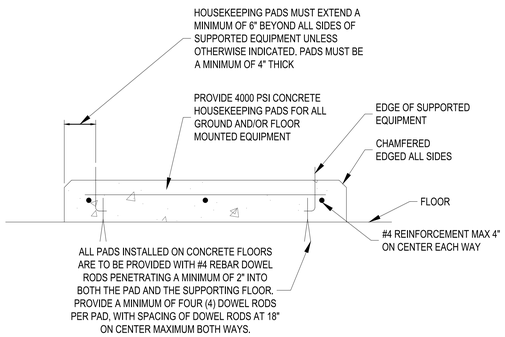

8 M-502 HOUSE KEEPING PAD DETAIL
SCALE: N.T.S

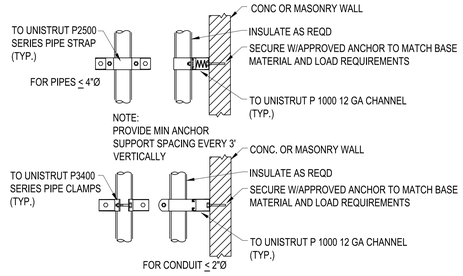

9 M-502 PIPING WALL SUPPORT DETAIL
SCALE: N.T.S

NO.	DATE	BY	DESCRIPTION

REVISIONS

Johnson Mirmiran Adams — 2101 Highway 82 West, Greenwood, Mississippi 38930 — P.O. Box 513, Greenwood, Mississippi - (662) 455-6943

USDA Agricultural Research Service

USDA AGRICULTURAL RESEARCH SERVICE
SUGARCANE RESEARCH LABORATORY
HOUMA, LOUISIANA

MECHANICAL DETAILS

A-E FIRM	USDA
PROJECT MANAGER	EPM
REH	WN
DESIGNER	PPM
SME	XXX
CHECKED BY	SAFETY & HEALTH
DRL	CM
JOB #	REAL PROPERTY
5825	JS

PROJECT NO. XXX
DATE 05/20/2026

AGRICULTURAL RESEARCH SERVICE
FACILITIES ENGINEERING BRANCH
5106 SUNNYSIDE AVENUE
BELTSVILLE, MD 20705-5100

SHEET M-502
131 OF 176

STATE OF LOUISIANA — Thomas E. Mirmiran — LICENSED PROFESSIONAL ENGINEER — 05/20/26

J:\greenwood\2025 Jobs\5825 USDA Sugarcane Research Lab Houma LA\07 Working Folder\Revit\M-502.dwg
May 19, 2026 - 7:53pm

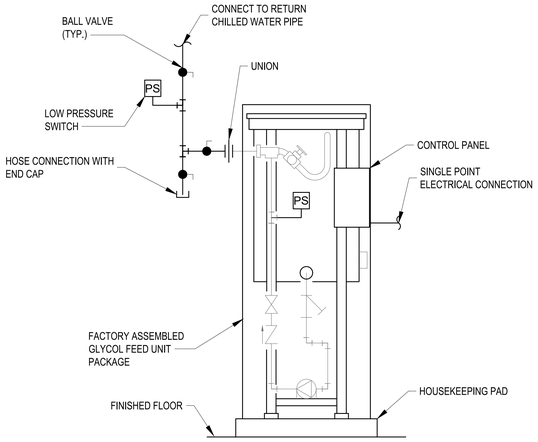

1 M-503 GLYCOL FEED UNIT DETAIL
SCALE: N.T.S

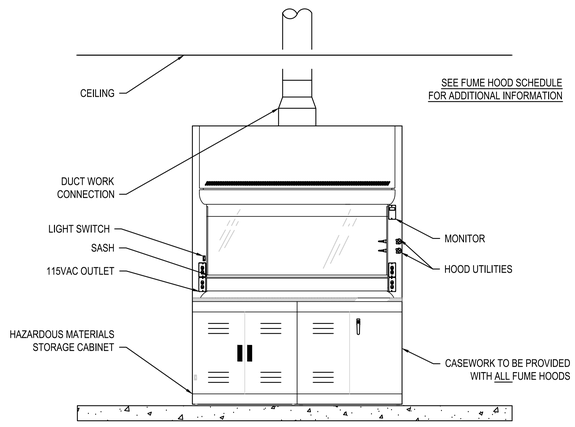

2 M-503 LAB FUME HOOD DETAIL
SCALE: N.T.S

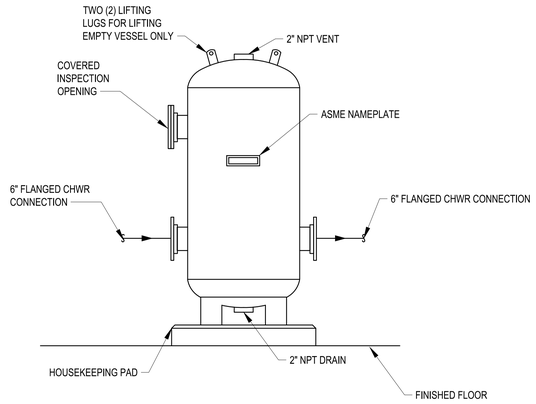

3 M-503 BUFFER TANK DETAIL
SCALE: N.T.S

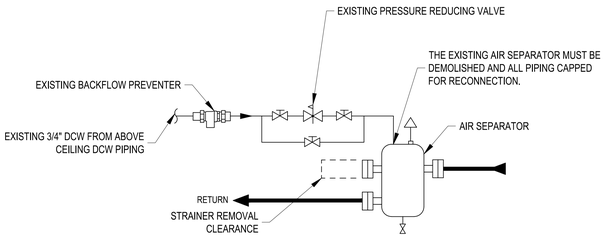

4 M-503 AIR SEPARATOR DETAIL
SCALE: N.T.S

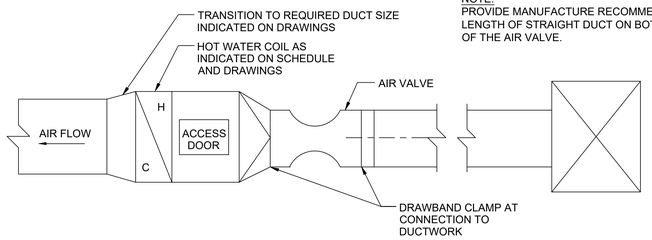

NOTE:
PROVIDE MANUFACTURE RECOMMENDED LENGTH OF STRAIGHT DUCT ON BOTH SIDES OF THE AIR VALVE.

5 M-503 TYPICAL SAV CONNECTION DETAIL
SCALE: N.T.S

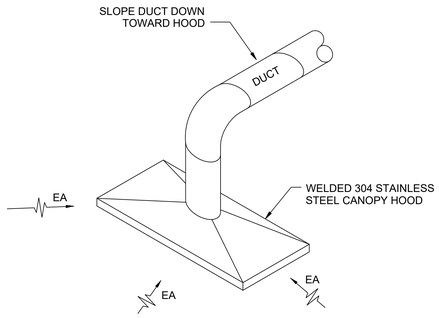

NOTES:

1. INSTALL CANOPY HOOD A MAXIMUM OF 1'-0" ABOVE EQUIPMENT DOOR OR AS REQUIRED TO BE A MINIMUM OF 7'-0" ABOVE FINISHED FLOOR.
2. PROVIDE CANOPY WITH DEEP SKIRT AROUND THE EDGES. TIE 1/2" TUBE INTO MANUFACTURER DRAIN NIPPLE AND ROUTE CONDENSATE TO NEAREST FLOOR DRAIN. AVOID ROUTING ACROSS OPEN FLOOR.
3. ANCHOR CANOPY AND DUCT TO BUILDING STRUCTURE.

6 M-503 AUTOCLAVE CANOPY EXHAUST DETAIL
SCALE: N.T.S

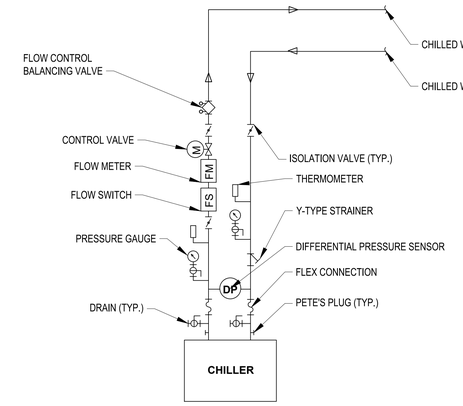

9 M-503 CHILLER CONNECTION DETAIL
SCALE: N.T.S

VERTICAL VALVE ARRANGEMENT

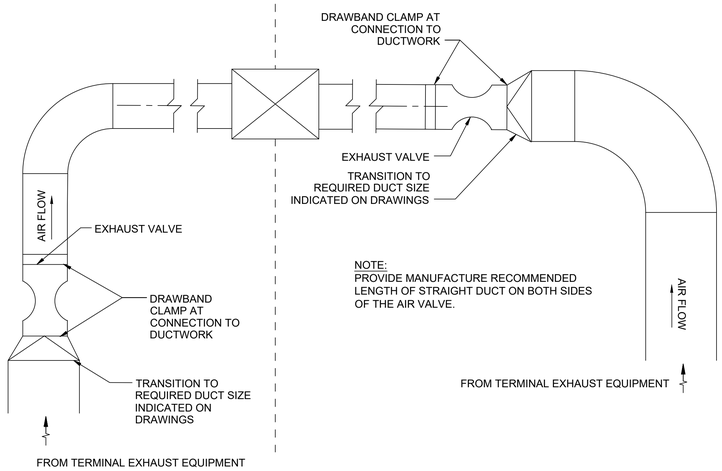

HORIZONTAL VALVE ARRANGEMENT

NOTE:
PROVIDE MANUFACTURE RECOMMENDED LENGTH OF STRAIGHT DUCT ON BOTH SIDES OF THE AIR VALVE.

7 M-503 EXHAUST VALVE MOUNTING OPTION
SCALE: N.T.S

NOTE:
ALL COMPONENTS SHOWN EXCLUDING THE WATER HEATER ARE EXISTING AND MUST BE TEMPORARILY CAPPED UNTIL RECONNECTION. CONTRACTOR MUST FIELD VERIFY EXISTING CONDITIONS AND PROVIDE ALL COMPONENTS SHOWN BELOW IF NOT DISCOVERED ON SITE.

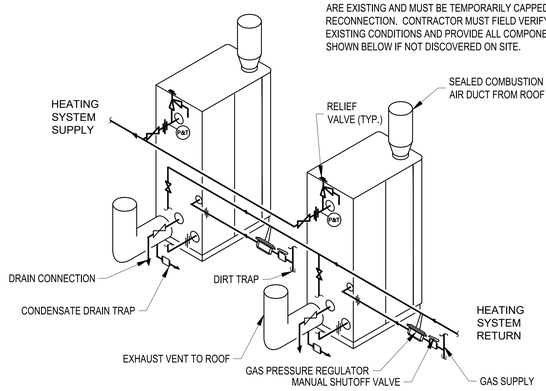

8 M-503 BOILER CONNECTION DETAIL
SCALE: N.T.S

NO.	DATE	BY	DESCRIPTION

REVISIONS

Johnson, Mirmiran & Thompson, Inc. — Johnson, Mirmiran & Thompson, P.A. — ARCHITECTS/ENGINEERS PLANNING SURVEYING MANAGEMENT — P.O. BOX 313, GREENWOOD, MISSISSIPPI • (662) 455-6443

USDA Agricultural Research Service

USDA AGRICULTURAL RESEARCH SERVICE
SUGARCANE RESEARCH LABORATORY
HOUMA, LOUISIANA

MECHANICAL DETAILS

A-E FIRM	USDA
PROJECT MANAGER	REH
EPM	WN
DESIGNER	SME
PPM	XXX
CHECKED BY	DRL
SAFETY & HEALTH	CM
JOB #	5825
REAL PROPERTY	JS

PROJECT NO. XXX
DATE 05/20/2026

AGRICULTURAL RESEARCH SERVICE
FACILITIES ENGINEERING BRANCH
5106 SUNNYSIDE AVENUE
BELTSVILLE, MD 20705-5100

SHEET M-503
132 OF 176

STATE OF LOUISIANA — DANIEL R. LYNCH — 05/20/26 — PROFESSIONAL ENGINEER

J:\Agreement\2025 Jobs\5825 USDA Sugarcane Research Lab Houma LA\07 Working Folder\Mech\M-503.dwg
May 19, 2026 - 2:29pm

AIR COOLED CHILLER SCHEDULE

MARK	BASIS OF DESIGN	LOCATION	SERVES	TYPE	REFRIG. TYPE	UNIT CAPACITY		EVAPORATOR SECTION						CONDENSER SECTION		COMPRESSOR DATA	SINGLE POINT POWER ELECTRICAL DATA			MISC.			MIN. EFFICIENCY		OPER. WEIGHT (LBS)	REMARKS
						NOMINAL CAPACITY (TONS)	RATED CAPACITY (TONS)	FLUID	MAX FLOW GPM	MIN FLOW GPM	EWT (°F)	LWT (°F)	WPD (FT H2O)	CONDENSER AMBIENT (°F)	NO. FANS	COMPRESSOR QUANTITY	MCA	MOP	VOLTS/Ø	COMM	EVAP. STRAINER	WATER FLOW INDICATOR	RATED (EER)	IPLV (EER)		
CH-1	TRANE	OUTDOOR	CHILLED WATER LOOP	CGAM	R-454B	130	121.5	20% PROP. GLYCOL	240.9	177.5	54	42	11.0	95	10	6	261	350	460/3	BACNET	FACTORY INSTALLED	YES	9.921	17.4	7900	ALL
CH-2	TRANE	OUTDOOR	CHILLED WATER LOOP	CGAM	R-454B	130	121.5	20% PROP. GLYCOL	240.9	177.5	54	42	11.0	95	10	6	261	350	460/3	BACNET	FACTORY INSTALLED	YES	9.921	17.4	7900	ALL

NOTES:

1. PROVIDE WITH SINGLE POINT POWER CONNECTION.
2. PROVIDE CHILLER WITH HAIL GUARDS.
3. PROVIDE CHILLER WITH INTEGRAL STRAINER.
4. CHILLER MUST BE CAPABLE OF TURNING DOWN TO 25% OF SCHEDULED CAPACITY.
5. PROVIDE HOT GAS BYPASS.

PUMP SCHEDULE

MARK	BASIS OF DESIGN	TYPE	SERVICE	IMPELLER SIZE (IN)	FLUID DATA			ELECTRICAL DATA			MIN. EFFICIENCY	WEIGHT (LBS)	REMARKS
					FLOW (GPM)	HEAD (FT)	FLUID TYPE	MIN. MOTOR HP	MOTOR RPM	VOLTS/ PHASE			
CHWP-1	BELL & GOSSETT	BASE MOUNTED END SUCTION	CHILLED WATER LOOP	6	422	105	20% GLYCOL	20	1707	480/3	79.3	582	SEE NOTES
CHWP-2	BELL & GOSSETT	BASE MOUNTED END SUCTION	CHILLED WATER LOOP	6	422	105	20% GLYCOL	20	1707	480/3	79.3	582	SEE NOTES
HTWP-1	BELL & GOSSETT	BASE MOUNTED END SUCTION	HEATING WATER LOOP	6	456	105	WATER	20	1731	480/3	80	582	SEE NOTES
HTWP-2	BELL & GOSSETT	BASE MOUNTED END SUCTION	HEATING WATER LOOP	6	456	105	WATER	20	1731	480/3	80	582	SEE NOTES

NOTES:

1. PROVIDE PUMPS WITH SUCTION DIFFUSERS, FLANGED STAINLESS STEEL HOSE & BRAID PUMP CONNECTIONS.
2. PROVIDE PUMPS WITH VARIABLE FREQUENCY DRIVES. DRIVES MUST BE PROVIDED BY THE PUMP MANUFACTURER.
3. ALL MOTORS TO BE NON-OVERLOADING AT ANY POINT ON THE PUMP CURVE.
4. BOTH HEATING WATER AND CHILLED WATER PUMPS ARE FULLY REDUNDANT AND MUST BE SET UP IN A LEAD STANDBY CONTROL SEQUENCE.
5. PROVIDE WITH VIBRATION ISOLATION/INERTIA PADS.

CHILLED WATER BUFFER TANK SCHEDULE

MARK	BASIS OF DESIGN	LOCATION	SERVES	CAPACITY GAL	PIPE CONN. SIZES (INCHES)	MAX. DIAM.	MAX. HEIGHT	WEIGHT LBS	TYPE	REMARKS
BT-1	TACO BTL	2109	CHILLED WATER LOOP	350	6"	36"	124"	910	VERTICAL	ALL

NOTES:

1. PROVIDE WITH FLANGED CONNECTIONS.
2. PROVIDE WITH BUTTERFLY ISOLATION VALVES.
3. ALL TANKS TO BE CARBON STEEL CONSTRUCTION, MAXIMUM WORKING PRESSURE 150PSI, MAXIMUM OPERATING TEMPERATURE 350 DEG F.
4. PROVIDE INSULATION PER SPECIFICATIONS.

CHEMICAL FILTER FEEDER (CFF-1)

NOTES:

1. PROVIDE ONE (1) FILTER FEEDER FOR THE CHILLED WATER LOOP. .
2. BASIS OF DESIGN - JL WINGERT 5HD
3. FURNISH AND INSTALL A PACKAGED, CHEMICAL FILTER FEEDER UNIT FOR DISPENSING PRE-MIXED CHEMICAL TREATMENT TO MAINTAIN CONSTANT MIXTURE IN CHILLED WATER LOOP.
4. THE UNIT SHALL CONSIST OF A BASE, 5 GALLON CAPACITY (MAXIMUM) FILTER FEEDER.

BOILER SCHEDULE

MARK	BASIS OF DESIGN	LOCATION	SERVES	FUEL TYPE	INPUT (MBH)	OUTPUT (MBH)	EWT (DEG F)	LWT (DEG F)	MINIMUM FLOW (GPM)	DESIGN FLOW (GPM)	MAXIMUM FLOW (GPM)	WPD (FT HEAD)	FLUE OUTLET	FLUID TYPE	VOLTS/ PHASE	WEIGHT (LBS)	REMARKS
B-1	AERCO BENCHMARK	2103	HEATING WATER LOOP	NATURAL GAS	3000	2625	160	140	25	228	375	4	8"	WATER	460/3	2580	ALL
B-2	AERCO BENCHMARK	2103	HEATING WATER LOOP	NATURAL GAS	3000	2625	160	140	25	228	375	4	8"	WATER	460/3	2580	ALL

NOTES:

1. PROVIDE PUMPS WITH CONDENSATE NEUTRALIZER KIT. ROUTE CONDENSATE TO FLOOR DRAIN.
2. PROVIDE FACTORY CONTROLLER FOR EACH BOILER AND MASTER CONTROLLER TO GOVERN ALL BOILERS. CONTROLS MUST INTERFACE WITH BUILDING CONTROL SYSTEM.
3. PROVIDE WITH 160 PSI MAXIMUM WORKING PRESSURE.
4. PROVIDE WITH COMBUSTION AIR FILTERS.

GLYCOL FEED UNIT

MARK	BASIS OF DESIGN	LOCATION	SERVES	CAPACITY GAL	PIPE CONN. SIZES IN	MAX. DIAM. IN	MAX. HEIGHT	PRESSURE RANGE PSI	SYSTEM PROPYLENE GLYCOL %	VOLTS/ PHASE	PUMP HP	WEIGHT LBS	TYPE	REMARKS
GFU-1	BELL & GOSSETT GMU-60	MECH. ROOM	CHILLED WATER LOOP	55	3/4" NPT	30	50	10-60	20	120/1	3/4	160	VERTICAL	ALL

NOTES:

1. GLYCOL FEED SYSTEM MUST BE PROVIDED FROM THE MANUFACTURER AS A COMPLETE PACKAGE AND BE SUPPLIED WITH ALL VALVES, FITTING, AND APPURTENANCES FOR A COMPLETE AND OPERATIONAL SYSTEM.
2. PROVIDE WITH INTEGRAL PUMP.
3. PROVIDE WITH LOW WATER CUTOFF.

INDOOR DUCTLESS UNIT SCHEDULE (SERVED BY ODU-1)

MARK	TYPE	AIRFLOW (CFM)	COOLING EAT °F (DB/WB)	COOLING TOTAL CAPACITY (BTU/H)	COND. SIZE (IN)	MAX DBA	ELECTRICAL VOLTS/PHASE	WEIGHT (LB)	REMARKS
IDU-1	WALL-MOUNTED	360	80/67	12,000	3/4	46	208/1	20	SEE NOTES

NOTES:

1. PROVIDE AND INSTALL REFRIGERANT SUPPLY AND RETURN LINES PER MANUFACTURER'S RECOMMENDATIONS AND REQUIREMENTS.
2. PROVIDE BALL VALVES FOR ISOLATION OF EACH PIECE OF EQUIPMENT/COMPONENT FROM SYSTEM.
3. PROVIDE WITH UNIT CONTROLLER THAT SHALL CONNECT TO THE EXISTING DDC SYSTEM FOR MONITORING.

EXPANSION TANKS

MARK	BASIS OF DESIGN	LOCATION	SERVES	TYPE	TANK VOLUME GAL.	ACCEPTANCE VOLUME GAL.	SIZE DIA X LENGTH	OPER. WEIGHT LBS	REMARKS
ET-1	BELL & GOSSETT	MECH. ROOM	CHILLED WATER LOOP	HORIZONTAL DIAPHRAM	25	20.2	16"X33"	292	ALL
ET-2	BELL & GOSSETT	MECH. ROOM	HEATING WATER LOOP	HORIZONTAL BLADDER	60	48.5	20"x49"	675	ALL

NOTES:

1. ALL TANKS TO BE CARBON STEEL SHELL & RUBBER DIAPHRAGM CONSTRUCTION, ASME RATED AND STAMPED FOR 125 PSI WORKING PRESSURE.
2. TANKS TO BE PRE-CHARGED AND FURNISHED WITH CHARGING VALVE.
3. TANKS TO HAVE INTEGRAL REMOVABLE HEAVY DUTY BUTYL RUBBER DIAPHRAGM.
4. FACTORY PRE-CHARGE TO 14 PSI.
5. PROVIDE INSULATION PER SPECIFICATIONS.

CONDENSING UNIT SCHEDULE (SERVING IDU-1)

MARK	SYSTEM TYPE	NOMINAL SIZE (TON)	SEER2 RATING	COOLING OUTDOOR AMBIENT TEMPERATURE (°F)	COMPRESSOR TYPE	RATED COOLING CAPACITY (BTUH)	REF. TYPE	ELECTRICAL			WEIGHT (LB)	REMARKS
								VOLTS/PHASE/HZ	MCA	MOCP		
ODU-1	COOLING ONLY	1.0	21	95	INVERTER	12,000	R-32	208/1/60	14.6	15	71	SEE NOTES

NOTES:

1. PROVIDE AND INSTALL REFRIGERANT SUPPLY AND RETURN LINES PER MANUFACTURER'S RECOMMENDATIONS AND REQUIREMENTS.
2. DISCONNECT SWITCH PROVIDED AND INSTALLED BY ELECTRICAL CONTRACTOR.

BASEBOARD HEATER SCHEDULE

MARK	BASIS OF DESIGN	TYPE	CAPACITY (BTU/HR)	FLOW (GPM)	MOTOR HP	MOTOR AMPS	VOLTS/ PHASE	REMARKS
BBH-1	MODINE	BASEBOARD	74254	4.6	0.04	10	115/1	ALL

NOTES:

1. PROVIDE WITH MOUNTED HANGING KIT.
2. HEATER WILL BE CONTROLLED BY A WALL MOUNTED THERMOSTAT SET TO 55 °F.

AIR SEPARATOR

MARK	BASIS OF DESIGN	LOCATION	SERVES	FLOW RATE (GPM)	PIPE CONN. SIZES (INCHES)	MAXIMUM PRESSURE DROP FT.HD.	OPERATING WEIGHT LBS	REMARKS
AS-1	BELL & GOSSETT	MECH. ROOM	CHILLED WATER LOOP	422	6	2.6	429	ALL
AS-2	BELL & GOSSETT	MECH. ROOM	HEATING WATER LOOP	456	6	3.03	429	ALL

NOTES:

1. ALL AIR SEPARATORS TO BE DESIGNED AND CONSTRUCTED PER ASME SECTION VII, DIVISION 1.
2. ALL TANKS TO BE CARBON STEEL CONSTRUCTION, MAXIMUM WORKING PRESSURE 125 PSI, MAXIMUM OPERATING TEMPERATURE 350 DEG F.
3. PROVIDE EACH TANK WITH SYSTEM STRAINER: TYPE 304 STAINLESS STEEL WITH 3/16" DIAMETER PERFORATIONS AND 51% OPEN AREA.
4. PROVIDE INSULATION PER SPECIFICATIONS.
5. PROVIDE BUTTERFLY ISOLATION VALVES.

NO.	DATE	BY	DESCRIPTION
			REVISIONS

Johnson McAdams PSM
ENGINEERS/SURVEYORS PLANNERS SUPERVISING TECHNOLOGIST
P.O. BOX 513, GREENWOOD, MISSISSIPPI - (662) 455-4421

USDA Agricultural Research Service

USDA AGRICULTURAL RESEARCH SERVICE
SUGARCANE RESEARCH LABORATORY
HOUMA, LOUISIANA

HVAC SCHEDULES

A-E FIRM	USDA
PROJECT MANAGER	REH
EPM	WN
DESIGNER	SME
PPM	XXX
CHECKED BY	DRL
SAFETY & HEALTH	CM
JOB #	5825
REAL PROPERTY	JS

PROJECT NO. XXX
DATE 05/20/2026

AGRICULTURAL RESEARCH SERVICE
FACILITIES ENGINEERING BRANCH
5106 SUNNYSIDE AVENUE
BELTSVILLE, MD 20705-5100

SHEET M-601
133 OF 176

STATE OF LOUISIANA — DONNA L. MCCAIN — LICENSED NO. 34284 — 05/20/26 — PROFESSIONAL ENGINEER

J:\greenwood\2025_John\3025 USDA Sugarcane Research Lab Houma LA\07 Working Folder\Mech\M-601.dwg
May 19, 2026 - 7:39pm

SINGLE DUCT VAV TERMINAL SCHEDULE

MARK	BASIS OF DESIGN	BOX TYPE	CFM DATA				DUCT CONN.	REHEAT/HEATING COIL DATA								REMARKS
			MFG. BOX MIN. CFM	COOLING/ HEATING CFM	MIN. COOLING/ HEATING CFM	MFG. BOX MAX. CFM	INLET SIZE	MAX APD IN.WC	MBH	EWT/LWT °F	EAT °F	LAT °F	GPM	MAX. WPD FT.HD.	COIL POSITION	
VAV-1-1	TRANE	SINGLE DUCT REHEAT	165	715	360	1400	10"Ø	0.24	37.88	160/140	55	104	3.79	2.14	DISCHARGE	ALL
VAV-1-2	TRANE	SINGLE DUCT REHEAT	165	570	285	1400	10"Ø	0.17	32.99	160/140	55	108	3.3	1.65	DISCHARGE	ALL
VAV-1-3	TRANE	SINGLE DUCT REHEAT	105	455	230	900	8"Ø	0.13	14.28	160/140	55	84	1.43	4.23	DISCHARGE	ALL
VAV-1-4	TRANE	SINGLE DUCT REHEAT	60	295	150	500	6"Ø	0.16	9.4	160/140	55	84	0.94	1.53	DISCHARGE	ALL
VAV-1-5	TRANE	SINGLE DUCT REHEAT	165	580	290	1400	10"Ø	0.17	33.36	160/140	55	108	3.34	1.68	DISCHARGE	ALL
VAV-1-6	TRANE	SINGLE DUCT REHEAT	60	380	190	500	6"Ø	0.25	10.91	160/140	55	82	1.09	1.98	DISCHARGE	ALL
VAV-1-7	TRANE	SINGLE DUCT REHEAT	165	540	270	1400	10"Ø	0.15	31.88	160/140	55	109	3.19	1.55	DISCHARGE	ALL
VAV-1-8	TRANE	SINGLE DUCT REHEAT	420	2800	1400	4000	16"Ø	0.49	114.5	160/135	55	92	9.17	3.44	DISCHARGE	ALL
VAV-1-9	TRANE	SINGLE DUCT REHEAT	320	1600	800	3000	14"Ø	0.27	80.34	160/140	55	101	8.04	2.54	DISCHARGE	ALL
VAV-1-10	TRANE	SINGLE DUCT REHEAT	60	325	165	500	6"Ø	0.19	9.94	160/140	55	83	0.99	1.69	DISCHARGE	ALL
VAV-1-11	TRANE	SINGLE DUCT REHEAT	165	580	290	1400	10"Ø	0.17	33.36	160/140	55	108	3.34	1.68	DISCHARGE	ALL
VAV-1-12	TRANE	SINGLE DUCT REHEAT	165	730	365	1400	10"Ø	0.25	38.34	160/140	55	103	3.84	2.19	DISCHARGE	ALL
VAV-1-13	TRANE	SINGLE DUCT REHEAT	240	1080	540	2000	12"Ø	0.26	54.16	160/140	55	101	5.42	1.52	DISCHARGE	ALL
VAV-1-14	TRANE	SINGLE DUCT REHEAT	420	2600	1300	4000	16"Ø	0.44	110.3	160/135	55	94	8.83	3.2	DISCHARGE	ALL
VAV-1-15	TRANE	SINGLE DUCT REHEAT	165	630	315	1400	10"Ø	0.2	35.11	160/140	55	106	3.51	1.85	DISCHARGE	ALL
VAV-1-16	TRANE	SINGLE DUCT REHEAT	320	1720	860	3000	14"Ø	0.31	83.69	160/140	55	100	8.37	2.75	DISCHARGE	ALL
VAV-1-17	TRANE	SINGLE DUCT REHEAT	420	2930	1450	4000	16"Ø	0.53	117.1	160/135	55	92	9.37	3.59	DISCHARGE	ALL

NOTES:

1. ACTUATORS FOR VAV BOX AIR-CONTROL DAMPERS ARE TO BE FURNISHED AND INSTALLED BY THE AUTOMATIC TEMPERATURE CONTROLS SUPPLIER.
2. HEATING COIL CONTROL VALVES AND ACTUATORS ARE TO BE FURNISHED AND INSTALLED BY THE AUTOMATIC TEMPERATURE CONTROLS SUPPLIER.
3. MFR'S INLET SIZE MAY NOT REPRESENT PRIMARY AIR DUCT SIZE. FURNISH REDUCERS OR ENLARGERS FOR CONNECTING PRIMARY DUCT TO INLET. PROVIDE STRAIGHT DUCT LENGTH AT A MINIMUM OF FIVE TIMES THE INLET DIAMETER OR MANUFACTURER RECOMMENDATION PRIOR TO VAV BOX.
4. PROVIDE BOXES WITH CONTROL ENCLOSURES, INTERNALLY LINED CASINGS, HEATING COILS LOCATED ON THE DISCHARGE POSITION.
5. FOR ALL BOXES, FIELD VERIFY RIGHT-HAND OR LEFT-HAND BOX AND COIL CONFIGURATIONS, DUCT CONNECTION CONFIGURATIONS, AND ELECTRICAL & CONTROL BOX LOCATIONS PRIOR TO SUBMITTAL.
6. PROVIDE VAV BOXES WITH DOUBLE WALL CONSTRUCTION.
7. MINIMUM AND MAXIMUM AIRFLOWS LISTED ARE SHOWN FOR SIZING OF VAV BOXES. VAV BOXES MUST BE BALANCED TO COOLING AND HEATING DESIGN AIRFLOWS LISTED.

HOT WATER COIL SCHEDULE

MARK	BASIS OF DESIGN	NUMBER OF ROWS	MAXIMUM CFM	FIN HEIGHT (IN)	FIN LENGTH (IN)	FLUID TYPE	REHEAT/HEATING COIL DATA								REMARKS
							MAX APD IN.WC	MBH	EWT/LWT °F	EAT °F	LAT °F	GPM	MAX. WPD FT.HD.	COIL POSITION	
HWC-1	PRECISION COILS	2	1930	18	16	WATER	0.69	79.6	160/140	53	91	8.1	1.4	DISCHARGE	ALL
HWC-2	PRECISION COILS	1	700	14	14	WATER	0.18	28.3	160/140	53	90	2.9	2.3	DISCHARGE	ALL
HWC-3	PRECISION COILS	2	625	12	12	WATER	0.23	25.9	160/140	53	91	2.6	2.8	DISCHARGE	ALL
HWC-4	PRECISION COILS	3	140	6	6	WATER	0.50	9.3	160/140	53	114	0.9	0.3	DISCHARGE	ALL
HWC-5	PRECISION COILS	3	140	6	6	WATER	0.50	9.3	160/140	53	114	0.9	0.3	DISCHARGE	ALL
HWC-6	PRECISION COILS	2	580	12	12	WATER	0.21	24.7	160/140	53	92	2.5	2.6	DISCHARGE	ALL
HWC-7	PRECISION COILS	2	725	12	12	WATER	0.34	28.7	160/140	53	90	2.9	0.7	DISCHARGE	ALL
HWC-8	PRECISION COILS	3	170	6	6	WATER	0.53	9.3	160/140	53	103	1.0	0.4	DISCHARGE	ALL
HWC-9	PRECISION COILS	2	610	12	12	WATER	0.23	25.5	160/140	53	92	2.6	2.8	DISCHARGE	ALL
HWC-10	PRECISION COILS	2	2020	18	18	WATER	0.54	81.2	160/140	53	90	8.3	1.5	DISCHARGE	ALL
HWC-11	PRECISION COILS	2	685	12	12	WATER	0.31	27.7	160/140	53	90	2.8	0.7	DISCHARGE	ALL
HWC-12	PRECISION COILS	2	665	12	12	WATER	0.26	26.9	160/140	53	90	2.7	3.1	DISCHARGE	ALL
HWC-13	PRECISION COILS	3	1230	16.5	14	WATER	0.35	50.5	160/140	53	90	5.1	1.1	DISCHARGE	ALL
HWC-14	PRECISION COILS	2	570	12	12	WATER	0.21	24.5	160/140	53	92	2.5	2.6	DISCHARGE	ALL

NOTES:

1. HEATING COIL CONTROL VALVES AND ACTUATORS ARE TO BE FURNISHED AND INSTALLED BY THE AUTOMATIC TEMPERATURE CONTROLS SUPPLIER.
2. MFR'S INLET SIZE MAY NOT REPRESENT PRIMARY AIR DUCT SIZE. FURNISH REDUCERS OR ENLARGERS FOR CONNECTING PRIMARY DUCT TO INLET.
3. FIELD VERIFY RIGHT-HAND OR LEFT-HAND COIL CONFIGURATIONS, DUCT CONNECTION CONFIGURATIONS, AND ELECTRICAL & CONTROL BOX LOCATIONS PRIOR TO SUBMITTAL.

SUPPLY AIR VALVE SCHEDULE

MARK	BASIS OF DESIGN	ROOM	CFM DATA			DUCT CONN.	PD ACROSS VALVE (IN)
			EQUIPMENT IN MAXIMUM POSITION CFM	OCCUPIED COOLING/ HEATING CFM	UNOCCUPIED COOLING/ HEATING CFM	INLET SIZE	
SAV-1	PHEONIX	1031	-	1930	915	14"Ø	0.6-3.0
SAV-2	PHEONIX	1032	700	700	320	10"Ø	0.6-3.0
SAV-3	PHEONIX	1033	625	210	135	10"Ø	0.6-3.0
SAV-4	PHEONIX	1035	-	140	70	8"Ø	0.6-3.0
SAV-5	PHEONIX	1036	-	140	70	8"Ø	0.6-3.0
SAV-6	PHEONIX	1037	-	580	290	10"Ø	0.6-3.0
SAV-7	PHEONIX	1038	725	185	90	8"Ø	0.6-3.0
SAV-8	PHEONIX	1039	-	170	80	8"Ø	0.6-3.0
SAV-9	PHEONIX	1040	610	195	120	10"Ø	0.6-3.0
SAV-10	PHEONIX	1041	2020	2020	1085	14"Ø	0.6-3.0
SAV-11	PHEONIX	1043	685	185	70	8"Ø	0.6-3.0
SAV-12	PHEONIX	1044	665	665	295	10"Ø	0.6-3.0
SAV-13	PHEONIX	1045	-	1230	615	12"Ø	0.6-3.0
SAV-14	PHEONIX	1046	-	570	225	10"Ø	0.6-3.0

NOTES:

1. PROVIDE WITH FACTORY HIGH-SPEED ACTION WHICH IS CAPABLE OF FULL OPEN TO FULL CLOSE POSITION IN LESS THAN 3 SECONDS.

BIOLOGICAL SAFETY CABINET SCHEDULE

MARK	DESCRIPTION	ROOM	SIZE (IN)	ITEM	EXHAUST AIR VOLUME (CFM)	S.P (IN/WG)
BSC-1	CLASS II, TYPE A2	1043	36	BSC WITH MONITOR AND CONTROLS	355	.21
BSC-2	CLASS II, TYPE A2	1038	36	BSC WITH MONITOR AND CONTROLS	355	.21

NOTES:

1. PROVIDE MANUFACTURER PROVIDED THIMBLE EXHAUST CONNECTION.

FUME HOOD SCHEDULE

MARK	DESCRIPTION	ROOM	SIZE (IN)	ITEM	MAX. AIRFLOW AT 18" SASH OPENING (CFM)	S.P (IN/WG)
H-1	VAV FUME HOOD	1032	60	FUME HOOD WITH MONITOR AND CONTROLS	640	.21
H-2	VAV FUME HOOD	1033	60	FUME HOOD WITH MONITOR AND CONTROLS	640	.21
H-3	VAV FUME HOOD	1040	60	FUME HOOD WITH MONITOR AND CONTROLS	640	.24
H-4	VAV FUME HOOD	1044	60	FUME HOOD WITH MONITOR AND CONTROLS	640	.24

GRILLE, REGISTER AND DIFFUSER SCHEDULE

MARK	TYPE	USE			PANEL SIZE IN.	NECK SIZE IN.	MAX CFM	MAX PD IN. WC	FINISH	PATTERN	MAX. NOISE CRITERIA (NC)	REMARKS
		S	R	E								
SAD-1	CEILING MOUNTED	X			24X24	8Ø	200	0.025	MATCH CEILING	4-WAY	10	ALL
SAD-2	CEILING MOUNTED	X			24X24	10Ø	300	0.025	MATCH CEILING	4-WAY	10	ALL
SAD-3	CEILING MOUNTED	X			24X24	12Ø	425	0.025	MATCH CEILING	4-WAY	10	ALL
SAD-4	CEILING MOUNTED	X			24X24	14Ø	550	0.025	MATCH CEILING	4-WAY	10	ALL
SAG-1	DUCT MOUNTED LOUVERED GRILLE	X			14Ø	14Ø	550	0.025	OFF WHITE	SIDEWALL	12	ALL
SAG-2	SIDEWALL MOUNTED LOUVERED GRILLE	X			12X10	12X10	360	0.025	OFF WHITE	SIDEWALL	12	ALL
RAG-1	CEILING MOUNTED		X		24X24	8X8	230	0.025	MATCH CEILING	PERF.	10	ALL
RAG-2	CEILING MOUNTED		X		24X24	10X10	370	0.025	MATCH CEILING	PERF.	10	ALL
RAG-3	CEILING MOUNTED		X		24X24	12X12	550	0.025	MATCH CEILING	PERF.	10	ALL
RAG-4	DUCT MOUNTED LOUVERED GRILLE		X		12X10	12X10	360	0.025	OFF WHITE	SIDEWALL	12	ALL
RAG-5	DUCT MOUNTED LOUVERED GRILLE			X	14Ø	14Ø	550	0.025	OFF WHITE	SIDEWALL	12	ALL
EAG-1	CEILING MOUNTED			X	24X24	6Ø	110	0.025	MATCH CEILING	PERF.	10	ALL
EAG-2	CEILING MOUNTED			X	24X24	8X8	230	0.025	MATCH CEILING	PERF.	10	ALL
EAG-3	CEILING MOUNTED			X	24X24	10Ø	300	0.025	MATCH CEILING	PERF.	10	ALL
EAG-4	CEILING MOUNTED			X	24X24	12Ø	425	0.025	MATCH CEILING	PERF.	10	ALL
EAG-5	CEILING MOUNTED			X	12X10	12X10	360	0.025	OFF WHITE	SIDEWALL	12	ALL

NOTES:

1. SUBMIT FINISH/FRAME STYLE OF ALL DEVICES FOR REVIEW.
2. PROVIDE WITH ALUMINUM CONSTRUCTION.

GENERAL EXHAUST VALVE SCHEDULE

MARK	BASIS OF DESIGN	ROOM	FUNCTION	CFM			VALVE DIAMETER (IN)	PD ACROSS VALVE (IN)
				MAX. OCCUPIED	MIN. OCCUPIED	UNOCCUPIED		
GEV-1	PHOENIX	1031	GENERAL LAB EXHAUST	2030	2030	1015	14	0.6-3.0
GEV-2	PHOENIX	1032	GENERAL LAB EXHAUST	610	120	230	10	0.6-3.0
GEV-3	PHOENIX	1033	GENERAL LAB EXHAUST	75	0	0	8	0.6-3.0
GEV-4	PHOENIX	1035	GENERAL LAB EXHAUST	140	140	70	8	0.6-3.0
GEV-5	PHOENIX	1036	GENERAL LAB EXHAUST	140	140	70	8	0.6-3.0
GEV-6	PHOENIX	1037	GENERAL LAB EXHAUST	580	580	290	10	0.6-3.0
GEV-7	PHOENIX	1038	GENERAL LAB EXHAUST	195	0	100	8	0.6-3.0
GEV-8	PHOENIX	1039	GENERAL LAB EXHAUST	180	180	90	8	0.6-3.0
GEV-9	PHOENIX	1040	GENERAL LAB EXHAUST	75	0	0	8	0.6-3.0
GEV-10	PHOENIX	1041	GENERAL LAB EXHAUST	1875	1375	940	14	0.6-3.0
GEV-11	PHOENIX	1043	GENERAL LAB EXHAUST	235	0	120	8	0.6-3.0
GEV-12	PHOENIX	1044	GENERAL LAB EXHAUST	595	105	225	10	0.6-3.0
GEV-13	PHOENIX	1045	GENERAL LAB EXHAUST	1230	1230	615	12	0.6-3.0
GEV-14	PHOENIX	1046	GENERAL LAB EXHAUST	695	695	350	10	0.6-3.0

NOTES:

1. PROVIDE WITH FACTORY HIGH-SPEED ACTION WHICH IS CAPABLE OF FULL OPEN TO FULL CLOSE POSITION IN LESS THAN 3 SECONDS.

EQUIPMENT EXHAUST VALVE SCHEDULE

MARK	BASIS OF DESIGN	ROOM	FUNCTION	CFM		VALVE DIAMETER (IN)	PD ACROSS VALVE (IN)
				MAX	MIN		
HEV-1	PHOENIX	1032	FUME HOOD	640	150	10	0.6-3.0
HEV-2	PHOENIX	1033	FUME HOOD	640	150	10	0.6-3.0
HEV-3	PHOENIX	1040	FUME HOOD	640	150	10	0.6-3.0
HEV-4	PHOENIX	1044	FUME HOOD	640	150	10	0.6-3.0
HEV-5	PHOENIX	1043	BIOLOGICAL SAFETY CABINET	355	0	8	0.6-3.0
HEV-6	PHOENIX	1038	BIOLOGICAL SAFETY CABINET	355	0	8	0.6-3.0
HEV-7	PHOENIX	1038	AUTOCLAVE	500	0	10	0.6-3.0

NOTES:

1. PROVIDE WITH FACTORY HIGH-SPEED ACTION WHICH IS CAPABLE OF FULL OPEN TO FULL CLOSE POSITION IN LESS THAN 3 SECONDS.

LAB OFFSETS

ROOM	INITIAL OFFSET CFM	
	OCCUPIED	UNOCCUPIED
1031	-100	-100
1032	-60	-60
1033	-15	-15
1035	0	0
1036	0	0
1037	0	0
1038	-10	-10
1039	-10	-10
1040	-30	-30
1041	145	145
1043	-50	-50
1044	-80	-80
1045	0	0
1046	-125	-125

NOTES:

1. THE VALUES LISTED ABOVE INDICATE THE REQUIRED CFM DIFFERENCES BETWEEN THE EXHAUST AND SUPPLY AIR FOR EACH LABORATORY SPACE.
2. LAB AIRFLOW OFFSET VALUES MUST BE MAINTAINED AT ALL TIMES THROUGHOUT THE ENTIRE RANGE OF VALVE OPENING PERCENTAGE TO MEET ALL SETPOINTS. CONTRACTOR MUST ENSURE THAT ROOM PRESSURIZATION RELATIONSHIPS ARE MET AND MAINTAINED.

THE Johnson McAdams FIRM P.A.
ARCHITECTS/ENGINEERS PLANNING SURVEYING MANAGEMENT
P.O. BOX 513, GREENWOOD, MISSISSIPPI - (662) 455-4943

NO.	DATE	BY	DESCRIPTION

REVISIONS

USDA Agricultural Research Service

USDA AGRICULTURAL RESEARCH SERVICE
SUGARCANE RESEARCH LABORATORY
HOUMA, LOUISIANA

MECHANICAL SCHEDULES

A-E FIRM	USDA
PROJECT MANAGER REH	EPM WN
DESIGNER SME	PPM XXX
CHECKED BY DRL	SAFETY & HEALTH CM
JOB # 5825	REAL PROPERTY JS

PROJECT NO. XXX
DATE 05/20/2026

AGRICULTURAL RESEARCH SERVICE
FACILITIES ENGINEERING BRANCH
5106 SUNNYSIDE AVENUE
BELTSVILLE, MD 20705-5100

SHEET M-602
134 OF 176

J:\greenwood\2025 Jobs\5825 USDA Sugarcane Research Lab Houma LA\07 Working Folder\Mech\M-602.dwg
May 19, 2026 - 7:31pm

AIR HANDLER UNIT SCHEDULE

MARK	LOCATION	BASIS OF DESIGN	TYPE	AIRFLOW DATA								HEATING COIL											CHILLED WATER COOLING COIL													PRE FILTER	FINAL FILTER	VOLTS/ PHASE	OPER. WEIGHT (LBS)	FLA	MCA	MFA	REMARKS
				SA FLOW (CFM)	OA FLOW (CFM)	ESP (IN H2O)	TSP (IN H2O)	FAN SPEED (RPM)	FAN TYPE	FAN QTY	HP PER FAN	CAPACITY	AIR SIDE			WATER SIDE					# ROWS	FPF	MAX. FACE VELOCITY	CAPACITY		AIR SIDE			WATER SIDE					# ROWS	FPF	MAX. FACE VELOCITY FPM								
												TOTAL MBH	EAT °F (DB)	LAT °F (DB)	APD (IN WC)	FLUID	EWT (°F)	LWT (°F)	FLOW (GPM)	WPD (FT)				TOTAL MBH	SENS MBH	EAT °F (DB/WB)	LAT °F (DB/WB)	APD (IN WC)	FLUID	EWT (°F)	LWT (°F)	FLOW (GPM)	WPD (FT)										
AHU-1	2004	TRANE	MODULAR	18530	3070	3.0	5.01	2228	PLENUM	5	6.03	552.09	35	63	0.066	WATER	160	140	56	6.24	1	80	494	900	573.6	83/70	55/54.9	0.967	20% PRO. GLYCOL	42	54	158	5.1	6	165	481	MERV 8	MERV 13	460/3	4685	31.35	32.89	35	ALL

NOTES:
1. PROVIDE UNITS WITH VARIABLE FREQUENCY DRIVE(S) IN ACCORDANCE WITH SPECIFICATIONS.
2. PROVIDE SMOKE DETECTORS IN SUPPLY & RETURN DUCTS. COORDINATE WITH ELECTRICAL AND FIRE ALARM.
3. INTERLOCK AHU VIA BAS TO DE-ENERGIZE ON ANY FIRE ALARM/SMOKE DETECTION IN THE BUILDING..
4. COOLING COILS TO BE DRAINABLE TYPE.
5. ACCESS DOORS ARE TO BE HINGED TYPE.
6. PROVIDE 2 INCH DEEP DISPOSABLE TYPE FILTERS.
7. AIR HANDLERS MUST BE DOUBLE WALLED INTERNALLY INSULATED CABINET.
8. PROVIDE AIR HANDLERS WITH SINGLE POINT POWER CONNECTION.
9. AIR HANDLERS MUST BE SHIPPED IN SPLITS AND ASSEMBLED IN PLACE.

DEDICATED OUTDOOR AIR UNIT SCHEDULE

MARK	LOCATION	BASIS OF DESIGN	TYPE	AIRFLOW DATA								HEATING COIL											CHILLED WATER COOLING COIL													PRE FILTER	FINAL FILTER	VOLTS/ PHASE	OPER. WEIGHT (LBS)	FLA	MCA	MFA	REMARKS
				SA FLOW (CFM)	OA FLOW (CFM)	ESP (IN H2O)	TSP (IN H2O)	FAN SPEED (RPM)	FAN TYPE	FAN QTY	HP PER FAN	CAPACITY	AIR SIDE			WATER SIDE					# ROWS	FPF	MAX. FACE VELOCITY	CAPACITY		AIR SIDE			WATER SIDE					# ROWS	FPF	MAX. FACE VELOCITY FPM								
												TOTAL MBH	EAT °F (DB)	LAT °F (DB)	APD (IN WC)	FLUID	EWT (°F)	LWT (°F)	FLOW (GPM)	WPD (FT)				TOTAL MBH	SENS MBH	EAT °F (DB/WB)	LAT °F (DB/WB)	APD (IN WC)	FLUID	EWT (°F)	LWT (°F)	FLOW (GPM)	WPD (FT)										
AHU-2	2004	TRANE	MODULAR	10790	10790	3.5	5.08	2509	PLENUM	2	7.5	411.14	20	55	0.04	WATER	160	140	42	3.48	1	80	376	989.01	490.03	93.7/78.9	53.0/52.9	0.767	20% PRO. GLYCOL	42	54	173	5.06	10	113	376	MERV 8	MERV 13	460/3	4158	22.65	25.40	35	ALL

NOTES:
1. PROVIDE UNITS WITH VARIABLE FREQUENCY DRIVE(S) IN ACCORDANCE WITH SPECIFICATIONS.
2. PROVIDE SMOKE DETECTORS IN SUPPLY DUCTS. COORDINATE WITH ELECTRICAL AND FIRE ALARM.
3. INTERLOCK AHU VIA BAS TO DE-ENERGIZE ON ANY FIRE ALARM/SMOKE DETECTION IN THE BUILDING.
4. COOLING COILS TO BE DRAINABLE TYPE.
5. ACCESS DOORS ARE TO BE HINGED TYPE.
6. PROVIDE 2 INCH DEEP DISPOSABLE TYPE FILTERS.
7. AIR HANDLERS MUST BE DOUBLE WALLED INTERNALLY INSULATED CABINET.
8. PROVIDE AIR HANDLERS WITH SINGLE POINT POWER CONNECTION.
9. AIR HANDLERS MUST BE SHIPPED IN SPLITS AND ASSEMBLED IN PLACE.

FUME EXHAUST FAN SCHEDULE

MARK	BASIS OF DESIGN	LOCATION	FAN DATA						ELEC. DATA		CONTROL INTERLOCKS		OPER. WEIGHT (LBS)	REMARKS
			CFM H/L	S.P.	DRIVE	FAN TYPE	RPM	MAX SONES	POWER HP	VOLTS/ PHASE	SWITCH	OTHER AS NOTED		
LEF-1A	GREENHECK VEKTOR-H-36	ROOF	11,625/ 5,183	3.1	BELT	FUME EXHAUST	1725	13	15	460/3	NO	VFD	4,023	ALL
LEF-1B	GREENHECK VEKTOR-H-36	ROOF	11,625/ 5,183	3.1	BELT	FUME EXHAUST	1725	13	15	460/3	NO	VFD	4,023	ALL

NOTES:
1. FUME EXHAUST SYSTEM IS TO BE SPARK B RESISTANT.
2. PROVIDE FAN AS A SINGLE FACTORY MOUNTED ASSEMBLY WITH N+1 REDUNDANCY. UNIT MUST BE CAPABLE OF PROVIDING SCHEDULED AIRFLOW WITH EACH FAN. PROVIDE BACKDRAFT DAMPER AT EACH FAN. PROVIDE EACH FAN WITH FACTORY BYPASS DAMPER TO MAINTAIN EXHAUST VELOCITY.
3. PROVIDE FACTORY INSTALLED AIRFLOW MONITORING SYSTEM WITH PROGRAMMABLE DIFFERENTIAL TRANSMITTER AND VIBRATION SENSOR.

LOUVER SCHEDULE

MARK	DESCRIPTION	APPLICATION	WIDTH (IN)	HEIGHT (IN)	DEPTH (IN)	FREE AREA (SF)	VOLUME (CFM)	PRESSURE DROP (IN WG)	FREE AREA VELOCITY (FPM)	BEGINNING POINT OF WATER PENETRATION, BPWP (FPM)	BASIS OF DESIGN MAKE	BASIS OF DESIGN MODEL	REMARKS
L-1	6" DRAINABLE	OUTSIDE AIR INTAKE	144	48	6	28.4	12,460	0.06	438	989	GREENHECK	ESD-635D	SEE NOTES 1,2,3

NOTES:
1. PROVIDE LOUVER WITH ALUMINUM INSECT SCREEN.
2. INTAKE LOUVERS MUST NOT BE SIZED FOR ANY MORE THAN 80% OF THE LOUVER MANUFACTURER'S BPWP RATING.
3. PROVIDE WITH GRAVITY BACKDRAFT DAMPER.

EXHAUST FAN SCHEDULE

MARK	BASIS OF DESIGN	LOCATION	FAN DATA						ELECTRICAL DATA					CONTROL INTERLOCKS		OPER. WEIGHT (LBS)	REMARKS
			CFM	S.P.	DRIVE	FAN TYPE	RPM	MAX SONES	POWER HP	VOLTS/ PHASE	FLA	MCA	MOP	SWITCH	OTHER AS NOTED		
EF-1	GREENHECK CUE-160XP-VG	ROOF	1,445	2	DIRECT	CENTRIFUGAL	2520	16.2	2	208/3	6.5	8	15	NO	CONSTANT	114	ALL

NOTES: 1. PROVIDE WITH MAGNETIC MOTOR STARTER WITH COIL VOLTAGE MATCHING OUTPUT OF THE BUILDING MANAGEMENT SYSTEM. PROVIDE POWER TRANSFORMERS AS REQUIRED.

NO.	DATE	BY	DESCRIPTION
			REVISIONS

Johnson McAdams PSC
ARCHITECTS/ENGINEERS PLANNING SURVEYING MANAGEMENT
P.O. BOX 515, GREENWOOD, MISSISSIPPI (662) 455-6421

USDA Agricultural Research Service

USDA AGRICULTURAL RESEARCH SERVICE
SUGARCANE RESEARCH LABORATORY
HOUMA, LOUISIANA

MECHANICAL SCHEDULES

A-E FIRM	USDA
PROJECT MANAGER	REH
EPM	WN
DESIGNER	SME
PPM	XXX
CHECKED BY	DRL
SAFETY & HEALTH	CM
JOB #	5825
REAL PROPERTY	JS
PROJECT NO.	XXX
DATE	05/20/2026

AGRICULTURAL RESEARCH SERVICE
FACILITIES ENGINEERING BRANCH
5106 SUNNYSIDE AVENUE
BELTSVILLE, MD 20705-5100

SHEET M-603

STATE OF LOUISIANA — DANIEL M. KNOX — 05/20/26 — PROFESSIONAL ENGINEER

J:\greenwood\2025 Jobs\5825 USDA Sugarcane Research Lab Houma LA\07 Working Folder\Revit\M-603.dwg
May 19, 2026 - 7:53pm

GENERAL NOTES

1. THE DESIGN INTENT OF THIS PROJECT IS TO REPLACE THE EXISTING CONTROLS SYSTEM IN ITS ENTIRETY, INCLUDING ALL CONTROL PANELS, WIRING, DEVICES, COMPONENTS, AND ASSOCIATED APPURTENANCES REQUIRED FOR A COMPLETE AND OPERATIONAL SYSTEM. THE CONTROLS SYSTEM MUST INTEGRATE WITH EXISTING EQUIPMENT AND MUST PROVIDE ALL MONITORING, CONTROL, AND ALARM FUNCTIONS CURRENTLY SERVED BY THE EXISTING SYSTEM. ALL EXISTING CONTROL POINTS, WHETHER SHOWN ON THE DRAWINGS OR NOT, MUST BE MAINTAINED AND INCORPORATED INTO THE NEW SYSTEM. CONTRACTOR MUST FIELD-VERIFY ALL EXISTING POINTS, SEQUENCES, AND CONNECTIONS. UPON COMPLETION OF THE CONTROLS SYSTEM WORK, ALL NEW AND EXISTING EQUIPMENT AFFECTED BY THIS PROJECT MUST BE TESTED AND BALANCED TO VERIFY PROPER OPERATION AND PERFORMANCE IN ACCORDANCE WITH THE FINAL CONTROL SEQUENCES.

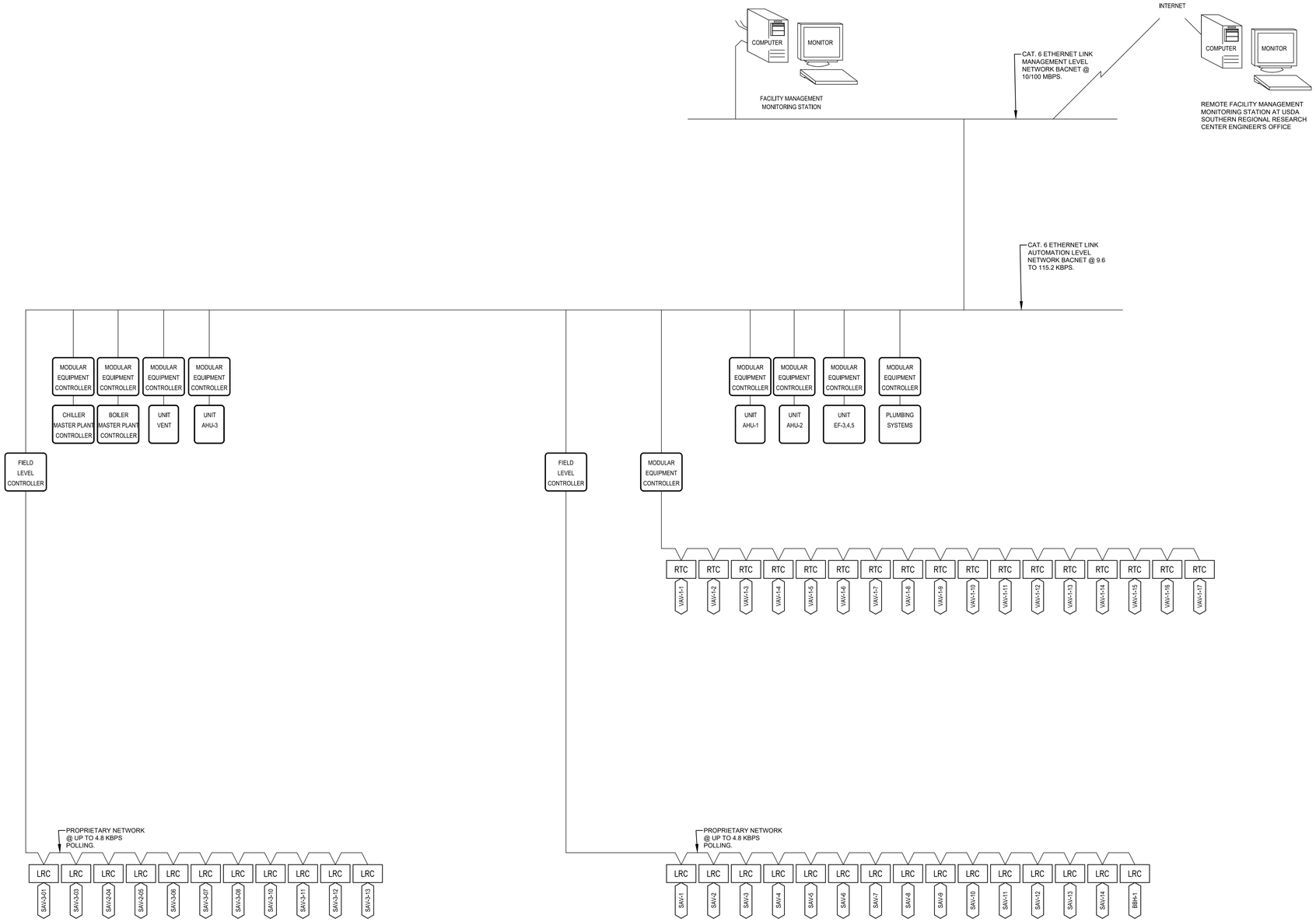

1 M-700 HVAC CONTROLS NETWORK
SCALE: 1/8"=1'-0"

GENERAL NOTES:

1. THIS DIAGRAM SHOWS THE GENERAL FEATURES REQUIRED IN THE DDC SYSTEM ARCHITECTURE. IT DOES NOT SHOW ALL NETWORK ELEMENTS INCLUDING CONNECTIONS AND DEVICES. PROVIDE A COMPLETE AND OPERATING SYSTEM TO PERFORM THE FUNCTIONS DESCRIBED IN THE VARIOUS SEQUENCES OF OPERATION AND TO MONITOR THE STATES OF OBJECTS DESCRIBED IN THE VARIOUS OBJECT LISTS.

2. ALL DDC FIELD WIRING IS REQUIRED TO BE IN CONDUIT. PROVIDE ALL J-BOXES AND CONDUIT REQUIRED TO COMPLETE THE DDC SYSTEM. SOME CONDUITS AND J-BOXES RESERVED FOR USE BY THE DDC SYSTEM ARE SHOWN ON THE E SERIES DRAWINGS.

LEGEND

RTC	ROOM TEMPERATURE CONTROLLER
UCM	LOCAL UNIT CONTROL MODULE
LRC	LABORATORY ROOM CONTROLLER

Johnson Mˢ Adams PLLC
ARCHITECTS/ENGINEERS PLANNING SURVEYING ENVIRONMENT
P.O. BOX 513, GREENWOOD, MISSISSIPPI (662) 455-5943

NO.	DATE	BY	DESCRIPTION

REVISIONS

STATE OF LOUISIANA
JAMES M. YATES
05/20/26
PROFESSIONAL ENGINEER

A-E FIRM	USDA
PROJECT MANAGER	EPM
REH	WN
DESIGNER	PPM
SME	XXX
CHECKED BY	SAFETY & HEALTH
DRL	CM
JOB #	REAL PROPERTY
5825	JS

USDA Agricultural Research Service

USDA AGRICULTURAL RESEARCH SERVICE
SUGARCANE RESEARCH LABORATORY
HOUMA, LOUISIANA

MECHANICAL CONTROLS

PROJECT NO. XXX	AGRICULTURAL RESEARCH SERVICE FACILITIES ENGINEERING BRANCH 5106 SUNNYSIDE AVENUE BELTSVILLE, MD 20705-5100	SHEET M-700
DATE 05/20/2026		136 OF 176

J:\Drawings\2025 Jobs\5825 USDA Sugarcane Research Lab Houma LA\07 Working Folder\Mech\M-700.dwg
May 19, 2026 - 2:39pm

1 (M-701) AHU-1 CONTROLS

SCALE: NTS

FUNCTION	POINT NAME	DESCRIPTION	SETTING (WITH UNITS)	RANGE (WITH UNITS)	IO TYPE	ALARMING: ALARM CONDITION (SEE NOTES)	ALARMING: ALARM PRIORITY
PROOFS & SAFETIES	SF-S	SUPPLY FAN STATUS		ON/OFF	BI	SUPPLY FAN PROOF FAILED	INFO
	SA-SMK	SUPPLY AIR SMOKE		ALM/NORMAL	BI	ALM	CRITICAL
	RA-SMK	RETURN AIR SMOKE		ALM/NORMAL	BI	ALM	CRITICAL
	CLG-DA-T-LL	COOLING COIL DISCHARGE AIR TEMP LOW LIMIT (FREEZESTAT)	39°F	ALM/NORMAL	BI	ALM	CRITICAL
	SA-P-HL	SUPPLY AIR PRESSURE HIGH LIMIT	3" W.C.	ALM/NORMAL	BI	ALM	CRITICAL
START/ STOP	SYS-OCC-C	OCCUPANCY COMMAND		OCCUPIED(1)/UNOCCUPIED(2)	NET-IN		
	SYS-OCC	SYSTEM OCCUPANCY (ACTUAL)		OCCUPIED(1)/UNOCCUPIED(2)	NET-OUT		
	SF-SS	SUPPLY FAN START/STOP		ON/OFF	BO		
	BLDG-T	BUILDING TEMPERATURE (NIGHT STAT)		0 - 130°F	AI, NET-IN	BLDG-T LESS THAN BLDG-T-LL	CRITICAL
	BLDG-T-LL	BUILDING TEMPERATURE LOW LIMIT	55°F				
SUPPLY FAN SPEED CONTROL	SF-C	SUPPLY FAN COMMAND		0-100%	AO		
	SA-P	SUPPLY AIR PRESSURE		0 - 5" W.C.	AI, NET-OUT	SYSTEM HAS BEEN IN OCCUPIED MODE FOR MORE THAN 5 MINUTES AND SA-P IS MORE THAN 20% ABOVE OR BELOW SA-P-SP	CRITICAL
	SA-P-SP	SUPPLY AIR PRESSURE SETPOINT	SEE AHU SCHEDULE				
	SUPPLY FAN CONTROL LOOP CONFIGURATION SETTINGS	PROPORTIONAL CONSTANT	TBD				
		INTEGRAL CONSTANT	TBD				
		BIAS	TBD				
		MAXIMUM OUTPUT	TBD				
		MINIMUM OUTPUT	TBD				
OUTDOOR AIR	OA-D-C	OUTSIDE AIR DAMPER COMMAND	0-100%				
	RA-D-C	RETURN AIR DAMPER COMMAND	0-100%				
	MINIMIM OUTSIDE AIR DAMPER CONTROL LOOP CONFIGURATION SETTINGS	PROPORTIONAL CONSTANT	TBD				
		INTEGRAL CONSTANT	TBD				
		BIAS	TBD				
SUPPLY AIR TEMPERATURE		MAXIMUM OUTPUT	TBD				
		MINIMUM OUTPUT	TBD				
	SA-T	SUPPLY AIR TEMPERATURE		0 - 130°F	AI	SYSTEM HAS BEEN IN OCCUPIED MODE FOR MORE THAN 5 MINUTES AND SA-T MORE THAN 10 DEG F ABOVE OR BELOW SETPOINT	INFO
	SA-RH	SUPPLY AIR RELATIVE HUMIDITY		0-100% RH	AO		
	CLG-V-C	COOLING VALVE COMMAND		0-100% OPEN	AO		
	PHG-V-C	PREHEAT VALVE COMMAND		0-100% OPEN	AO		
	CLG-DA-T	COOLING COIL DISCHARGE AIR TEMPERATURE	AS SCHEDULED (ADJ.)	0 - 130°F	AI	ALM	CRITICAL
	SA-T-SP	SUPPLY AIR TEMPERATURE SETPOINT	AS SCHEDULED (ADJ.)	0 - 130°F	AI		
	COOLING VALVE CONTROL LOOP CONFIGURATION SETTINGS	THROTTLING RANGEPROPORTIONAL GAIN	TBD				
		INTEGRAL CONSTANT	TBD				
		BIAS	TBD				
		MAXIMUM OUTPUT MINIMUM OUTPUT	TBD				
OTHER POINTS	RA-T	RETURN AIR TEMPERATURE		0 - 130°F	AI		
	OA-T	OUTDOOR AIR TEMPERATURE		0 - 130°F	AI		
	MA-T	MIXED AIR TEMPERATURE		0 - 130°F	AI		
	MA-PFLT-P-HL	PRE-FILTER PRESSURE HIGH LIMIT SWITCH	1" W.C.	ALM/NORMAL	BI	ALM	CRITICAL
	MA-FLT-P-HL	MIXED AIR FILTER PRESSURE HIGH LIMIT SWITCH	1" W.C.	ALM/NORMAL	BI	ALM	CRITICAL

NOTES:

1. THE CONTRACTOR MUST COMPLETE THE POINTS SCHEDULE AS INDICATED IN THE SPECIFICATION AND IN ACCORDANCE WITH THIS DRAWING.
2. UNIT MANUFACTURERS PROOFS AND SAFETIES: THE CONTRACTOR MUST SHOW EACH PROOF AND SAFETY AS A SEPARATE ROW.
3. UNIT STATUS: SERVES AS A MONITORED POINT AT THE M&C SOFTWARE (FRONT-END) AND AS A HEATING/COOLING REQUEST TO THE BOILER, AND/OR CHILLER SERVING THIS SYSTEM.
4. "TBD" = TO BE DETERMINED DURING COMMISSIONING.

SEQUENCE OF OPERATION

AHU-1

GENERAL OPERATING MODES: ALL NORMAL MODES ARE COMMANDED BY THE DDC SYSTEM AND THE FIRE ALARM SHUTDOWN MODE WILL BE COMMANDED BY A SIGNAL FROM THE FIRE ALARM SYSTEM. THE DDC SYSTEM WILL HAVE OPTIMUM START/STOP SCHEDULES, NIGHTTIME HIGH AND LOW SETPOINTS, OPERATOR ADJUSTABLE OVERRIDE TIMES, AND DEMAND LIMIT PARAMETERS.

1. WARMUP/COOLDOWN MODE: WHEN SCHEDULED BY THE DDC, THE SYSTEM OPERATION WILL BE ENABLED FOR COOLING AND HEATING ONLY. AFTER THE DIFFERENTIAL PROVES FAN OPERATION, ENABLE THE TEMPERATURE CONTROL. THE OUTDOOR AIR DAMPERS WILL REMAIN CLOSED DURING THIS OPERATION.
2. OCCUPIED MODE: WHEN SCHEDULED BY THE DDC, THE SYSTEM ENTERS THE OCCUPIED MODE. THE OPERATION MODE IS IDENTICAL TO THE WARM/COOLDOWN MODE EXCEPT THAT THE MINIMUM OUTSIDE AIR DAMPER IS OPENED. ALL INTERLOCKED EXHAUST FANS ARE ACTIVATED.
3. UNOCCUPIED MODE: WHEN SCHEDULED BY THE DDC, THE SYSTEM OPERATION WILL BE DISABLED. THE FAN WILL STOP, OUTDOOR DAMPER CLOSES, EXHAUST FANS STOP, AND ALL CONTROL DEACTIVATED. NIGHT TIME SETBACK TEMPERATURES MUST BE 10 DEGF (ADJ.) BELOW INDOOR DESIGN HEATING CONDITIONS BUT NOT LOWER THAN 55 DEGF AND 5 DEGF (ADJ.) ABOVE INDOOR COOLING DESIGN CONDITIONS BUT NOT HIGHER THAN 85 DEGF. (UNITS MUST BE PROGRAMMED TO RUN IN THE OCCUPIED MODE AT ALL TIMES). UNOCCUPIED MODE MUST ONLY BE PROVIDED AS A SYSTEM FEATURE FOR THE USER.
4. FIRE ALARM SHUTDOWN MODE: ALL FANS WILL STOP AND THROUGH AN ADJUSTABLE DELAY ALL SYSTEM DAMPERS WILL CLOSE.

AHU START CONTROL: WHEN THE HAND OFF AUTO (H-O-A) SWITCH INITIATES A START SIGNAL IN THE HAND POSITION, OR THE DDC INITIATES A START SIGNAL WITH THE H-O-A IN THE AUTO POSITION, THE SYSTEM WILL ENTER THE WARM-UP/COOLDOWN MODE. THE SUPPLY FAN WILL START AND RUN CONTINUOUSLY. THE VOLUME CONTROL WILL BE AS DESCRIBED IN THE VARIABLE AIR VOLUME CONTROL SEQUENCE THROUGH A 15 MINUTE TIME DELAY (0 TO 60 MINUTES ADJ.). THE SYSTEM WILL ENTER THE OCCUPIED MODE UPON A SIGNAL FROM THE DDC SYSTEM. THE OUTDOOR AIR DAMPER WILL OPEN AND INTERLOCKED EXHAUST FANS WILL START. THE OCCUPIED MODE WILL BE INITIATED THOUGH A PREPROGRAMMED SCHEDULE IN THE DDC SYSTEM OR BY A MANUAL COMMAND THROUGH THE DDC SYSTEM.

VARIABLE VOLUME CONTROL: THE STATIC PRESSURE SENSOR/TRANSMITTER IN THE MAIN SUPPLY DUCT WILL BE LOCATED APPROXIMATELY 3/4 OF THE DUCTWORK DISTANCE DOWNSTREAM OF THE AHU. WITH THE SUPPLY AIR OPERATING, THE DDC SYSTEM WILL MODULATE THE SUPPLY PLUG FAN ACTUATOR TO MAINTAIN THE DUCT SYSTEM PRESSURE. SETPOINT MUST BE REDUCED TO 25% (ADJ.) DURING OCCUPIED MODE.

OUTDOOR AIR DAMPER CONTROL: WHEN THE SYSTEM IS IN THE OCCUPIED MODE, THE OUTDOOR AIR DAMPER MUST REMAIN OPEN. AS SUPPLY AND RETURN AIR QUANTITIES DECREASE UPON VAV TURNDOWN THE RETURN AIR DAMPER WILL MODULATE CLOSED BASED ON AIRFLOW MONITORING STATION TO PROVIDE A CONSTANT VOLUME OF OUTDOOR AIR REGARDLESS OF THE SUPPLY AIR QUANTITY SETPOINT.

COOLING COIL CONTROL: WHEN THE FAN STATUS IS PROVEN, THE TEMPERATURE CONTROL IS ACTIVATED,THE DISCHARGE AIR SENSOR WILL MODULATE THE CHILLED WATER COIL VALVE TO MAINTAIN A DISCHARGE AIR DEWPOINT TEMPERATURE AS SCHEDULED (ADJ.).

PREHEAT COIL CONTROL: WHEN THE FAN STATUS IS PROVEN, THE TEMPERATURE CONTROL IS ACTIVATED, THE DISCHARGE AIR SENSOR WILL MODULATE THE REHEAT HEATING WATER COIL VALVE TO MAINTAIN A DISCHARGE AIR SETPOINT TEMPERATURE OF 60 DEG. F (ADJ).

AHU SHUTDOWN CONTROL: WHEN THE H-O-A SWITCH INITIATES A STOP SIGNAL THROUGH THE OFF POSITION OR THE DDC INITIATES A STOP SIGNAL WITH THE H-O-A IN THE AUTO POSITION OF THE DUCT WORK STATIC PRESSURE EXCEEDS THE SETPOINT OF THE MANUAL RESET HIGH STATIC SWITCH. THE SUPPLY FAN WILL STOP THROUGH AN ADJUSTABLE TIME DELAY SET FOR 15 SECONDS (0 TO 60 SECONDS ADJ.) THE OUTDOOR AIR DAMPER WILL CLOSE. THE SAME SEQUENCE FOR FAN SHUTDOWN CONTROL WILL ALSO OCCUR ON A SIGNAL FROM THE FIRE ALARM SYSTEM.

A. A MANUALLY RESET DIFFERENTIAL PRESSURE SWITCH ON THE AHU DISCHARGE AIR PLENUM WILL BE WIRED THROUGH THE HAND AND AUTO POSITION OF THE H-O-A SWITCH TO STOP THE AHU FAN IF THE DUCT PRESSURE EXCEEDS ITS SETPOINT.

LOW TEMP CONTROL: A TEMPERATURE SENSOR IN THE MIXED AIR DUCTWORK WILL DIRECT THE LOW TEMPERATURE SHUTDOWN. ACCORDING TO THE FOLLOWING THREE ADJUSTABLE SETTINGS.

A. SETTING #1 (40 DEG.F.) DDC PRINTS A LEVEL ONE DIAGNOSTIC ALARM.
B. SETTING #2 (38 DEG.F.) DDC PRINTS A LEVEL TWO DIAGNOSTIC ALARM, STOPS SUPPLY FAN, CLOSES OUTDOOR AIR DAMPER. AUTOMATIC RESET AFTER A 5 MINUTE (0 TO 60 MINUTE ADJ.) SHUTDOWN.
C. SETTING #3 (35 DEG.F.) DDC PRINTS A LEVEL THREE DIAGNOSTIC ALARM, STOPS SUPPLY FAN, CLOSES OUTDOOR AIR DAMPER. MANUAL RESET ON LOW LIMIT STAT

FILTER STATUS: A DIFFERENTIAL PRESSURE SENSOR ACROSS THE AHU FILTER SECTION WILL INDICATE STATUS FROM CLEAN MEDIA AT STARTUP TO SOILED MEDIA CONDITION.

A. THE DDC WILL INDICATE PERCENTAGE LOADED. INITIAL PRESSURE DROP IN ACCORDANCE WITH FILTER MEDIA MANUFACTURER'S RECOMMENDATION, SOILED FILTER VALUE OF 10 INCHES WATER COLUMN.
B. THE DDC WILL SET A MAINTENANCE ALARM AT A PRESSURE DROP OF 0 INCHES (0-2" ADJ.).

ALARMS: PRINT DIAGNOSTIC ALARM TO DDC IF SEQUENCE OF OPERATION CANNOT BE ACCOMPLISHED DURING NORMAL SCHEDULED HOURS OF OPERATION. OPERATORS WILL BE ABLE TO VIEW ALL POINTS OF CONTROL PRIOR TO FAILURE.

THE Johnson McAdams FIRM P.A.
ARCHITECTS/ENGINEERS PLANNING SURVEYING MANAGEMENT
P.O. BOX 513, GREENWOOD, MISSISSIPPI - (662) 455-4943

NO.	DATE	BY	DESCRIPTION

REVISIONS

STATE OF LOUISIANA
SAMUEL M. ENGLE
LICENSE No. 44767
05/20/26
PROFESSIONAL ENGINEER

A-E FIRM | USDA
PROJECT MANAGER: REH | EPM: WN
DESIGNER: SME | PPM: XXX
CHECKED BY: DRL | SAFETY & HEALTH: CM
JOB #: 5825 | REAL PROPERTY: JS

USDA
USDA Agricultural Research Service
USDA AGRICULTURAL RESEARCH SERVICE
SUGARCANE RESEARCH LABORATORY
HOUMA, LOUISIANA

HAVC CONTROLS DIAGRAMS

PROJECT NO. XXX
DATE 05/20/2026
AGRICULTURAL RESEARCH SERVICE
FACILITIES ENGINEERING BRANCH
5106 SUNNYSIDE AVENUE
BELTSVILLE, MD 20705-5100
SHEET M-701
137 OF 176

J:\greenwood\2025 Jobs\5825 USDA Sugarcane Research Lab Houma LA\07 Working Folder\Mech\M-701.dwg
May 19, 2026 - 7:31pm

NOTE: SEE HEATING AND CHILLED WATER PIPING DIAGRAMS FOR LOCATIONS OF 2-WAY & 3-WAY CONTROL VALVES

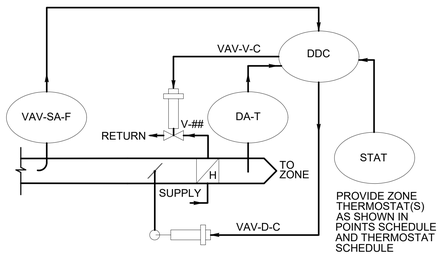

1 M-702 VAV BOX W/REHEAT CONTROLS
SCALE: NTS

SEQUENCE OF OPERATION
VAV BOXES
RUN CONDITIONS - SCHEDULED:
THE UNIT MUST RUN ACCORDING TO A USER DEFINABLE TIME SCHEDULE IN THE FOLLOWING MODES:
- OCCUPIED MODE: THE UNIT MUST MAINTAIN
- A 76°F (ADJ.) COOLING SETPOINT
- A 70°F (ADJ.) HEATING SETPOINT.
- TEMPERATURES ARE TO BE WITHIN 2°F OF SET POINT.

ALARMS MUST BE PROVIDED AS FOLLOWS:
- HIGH ZONE TEMP: IF THE ZONE TEMPERATURE IS GREATER THAN THE COOLING SETPOINT BY A USER DEFINABLE AMOUNT (ADJ.).
- LOW ZONE TEMP: IF THE ZONE TEMPERATURE IS LESS THAN THE HEATING SETPOINT BY A USER DEFINABLE AMOUNT (ADJ.).

ZONE SETPOINT ADJUST:
THE OCCUPANT MUST BE ABLE TO ADJUST THE ZONE TEMPERATURE HEATING AND COOLING SETPOINTS AT THE ZONE SENSOR.
ZONE OPTIMAL START:
THE UNIT MUST USE AN OPTIMAL START ALGORITHM FOR MORNING START-UP. THIS ALGORITHM MUST MINIMIZE THE UNOCCUPIED WARM-UP OR COOL-DOWN PERIOD WHILE STILL ACHIEVING COMFORT CONDITIONS BY THE START OF SCHEDULED OCCUPIED PERIOD.
ZONE UNOCCUPIED OVERRIDE:
A TIMED LOCAL OVERRIDE CONTROL MUST ALLOW AN OCCUPANT TO OVERRIDE THE SCHEDULE AND PLACE THE UNIT INTO AN OCCUPIED MODE FOR AN ADJUSTABLE PERIOD OF TIME. AT THE EXPIRATION OF THIS TIME, CONTROL OF THE UNIT MUST AUTOMATICALLY RETURN TO THE SCHEDULE.
SPACE OCCUPIED MODE:
- SPACE THERMOSTAT MUST MODULATE PRIMARY AIR DAMPER TO MAINTAIN SPACE TEMPERATURE.
- UPON CALL FOR HEAT, THE PRIMARY DAMPER MUST CLOSE TO MINIMUM POSITION. UPON FURTHER CALL FOR HEAT WITH PRIMARY AIR DAMPER IN MINIMUM POSITION, THE REHEAT CONTROL VALVE MUST OPEN AND MODULATE IN SEQUENCE TO MAINTAIN SPACE TEMPERATURE SET POINT.
- UPON CALL FOR COOLING, THE REHEAT VALVE MUST MODULATE CLOSED. UPON A FURTHER CALL FOR COOLING, THE AIR DAMPER MUST MODULATE OPEN AS REQUESTED TO PROVIDE COOLING AS SENSED BY THE SPACE SENSOR.

HEATING WATER REHEATING:
THE CONTROLLER MUST MEASURE THE ZONE TEMPERATURE AND STAGE THE 3-WAY & 2 -WAY HEATING WATER VALVES TO MAINTAIN THE HEATING AND COOLING MODE DISCHARGE AIR TEMPERATURES AS SCHEDULED.
THE REHEATING MUST BE ENABLED WHENEVER:
- VAV BOX DAMPER IS IN THE OPEN POSITION AND IN THE HEATING MODE.
- VAV BOX DAMPER IS IN THE MINIMUM POSITION IN THE COOLING MODE.

DISCHARGE AIR TEMPERATURE:
THE CONTROLLER MUST MONITOR THE DISCHARGE AIR TEMPERATURE.
ALARMS MUST BE PROVIDED AS FOLLOWS:
- HIGH DISCHARGE AIR TEMP: IF THE DISCHARGE AIR TEMPERATURE IS GREATER THAN 120°F (ADJ.).
- LOW DISCHARGE AIR TEMP: IF THE DISCHARGE AIR TEMPERATURE IS LESS THAN 40°F (ADJ.).

FUNCTION	POINT NAME	DESCRIPTION	SETTING (WITH UNITS)	RANGE (WITH UNITS)	IO TYPE	ALARMING: ALARM CONDITION (SEE NOTES)	ALARMING: ALARM PRIORITY
PROOFS & SAFETIES	TBD	MANUFACTURER'S PROOFS (SEE NOTE)	TBD	ALM/NORMAL	TBD		
	TBD	MANUFACTURER'S SAFETIES (SEE NOTE)	TBD	ALM/NORMAL	TBD		
	HTG-V-S	HEATING VALVE POSITION STATUS		0-100% OPEN	AI	ALM	INFO
START/STOP	SYS-OCC	OCCUPANCY INPUT FROM SYSTEM SCHEDULER		OCCUPIED(1)/UNOCCUPIED(2)	NET-IN		
	ZN-OCC	OCCUPANCY OVERRIDE FROM SPACE		OCCUPIED(1)/UNOCCUPIED(2)	BI		
ZONE TEMPERATURE CONTROL	ZN-T	ZONE TEMPERATURE		40 - 85°F	AI	ZONE TEMPERATURE BELOW 60°F OR ABOVE 80°F	INFO
	ZN-T-SP	ZONE TEMPERATURE SETPOINT	OCCUPANCY ADJUSTABLE	72 - 75°F	AI		
	ZN-T-SP-UNOCC	ZONE TEMPERATURE SETPOINT FOR UNOCCUPIED MODE		60 - 80°F	NET-OUT		
	VAV-SA-F	VAV SUPPLY AIRFLOW		AS SCHEDULED	AI		
	VAV-SA-F-SP	VAV SUPPLY AIRFLOW SETPOINT	RESET SCHEDULE		NET-OUT		
	VAV-D-C	VAV DAMPER COMMAND		0-100% OPEN	AO		
	VAV-D-C	VAV REHEAT VALVE COMMAND		0-100% OPEN	AO		
	DAMPER CONTROL LOOP CONFIGURATION SETTINGS	PROPORTIONAL CONSTANT	TBD				
		INTEGRAL CONSTANT	TBD				
		BIAS	TBD				
		MAXIMUM OUTPUT	TBD				
		MINIMUM OUTPUT	TBD				

NOTES:
1. THE CONTRACTOR MUST COMPLETE THE POINTS SCHEDULE AS INDICATED IN THE SPECIFICATION AND IN ACCORDANCE WITH THIS DRAWING.
2. UNIT MANUFACTURERS PROOFS AND SAFETIES: THE CONTRACTOR MUST SHOW EACH PROOF AND SAFETY AS A SEPARATE ROW.
3. UNIT STATUS: SERVES AS A MONITORED POINT AT THE M&C SOFTWARE (FRONT-END) AND AS A HEATING/COOLING REQUEST TO THE BOILER, AND/OR CHILLER SERVING THIS SYSTEM.
4. "TBD" = TO BE DETERMINED DURING COMMISSIONING.

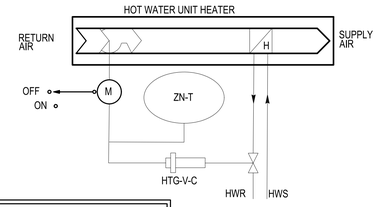

NOTE: SEE HEATING AND CHILLED WATER PIPING DIAGRAMS FOR LOCATIONS OF 2-WAY & 3-WAY CONTROL VALVES

SEQUENCE OF OPERATION

BASE BOARD UNIT HEATER (BBH) WITH HEATING WATER HEATING:
TYPICAL FOR BBH-1

GENERAL: THE UNIT HEATER MUST BE CONTROLLED BY SPACE THERMOSTAT. UNIT HEATER MUST HAVE TWO MODES OF OPERATION: OFF AND ON.

OFF MODE: THE HEATING WATER VALVE MUST BE CLOSED, AND THE MUST BE OFF.

ON MODE: WHEN THE SPACE TEMPERATURE FALLS BELOW THERMOSTAT SET POINT, THE UH FAN MUST BE ACTIVATED AND THE HEATING WATER VALVE MUST OPEN. WHEN THE TEMPERATURE IS ABOVE THERMOSTAT SETPOINT THE FAN MUST TURN OFF AND THE HEATING WATER VALVE MUST CLOSE.

FUNCTION	POINT NAME	DESCRIPTION	SETTING (WITH UNITS)	RANGE (WITH UNITS)	IO TYPE	ALARMING: ALARM CONDITION (SEE NOTES)	ALARMING: ALARM PRIORITY
PROOFS & SAFETIES	SF-S	SUPPLY FAN STATUS	--	ON/OFF	BI	--	--
START/STOP	SF-SS	SUPPLY FAN START/STOP COMMAND	--	ON/OFF	BO	--	--
ZONE TEMPERATURE CONTROL	ZN-T	ZONE TEMPERATURE	--	40 TO 100 DEG F	AI	--	--
	ZN-T-SP	ZONE TEMPERATURE SET POINT	60 DEG F (ADJ.)	55 TO 65 DEG F	AI	ZN-T BELOW 55 DEG F	INFO
	HTG-V-C	HEATING WATER CONTROL VALVE COMMAND	--	0 - 100% OPEN	AO	--	--

2 M-702 HYDRONIC UNIT HEATER CONTROLS
SCALE: NTS

STATE OF LOUISIANA
DARRIL M. WALZ
05/20/26
PROFESSIONAL ENGINEER

The Johnson Mˢ Adams PSM P.A.
ARCHITECTS/ENGINEERS PLANNING SURVEYING ENVIRONMENT
P.O. BOX 513, GREENWOOD, MISSISSIPPI - (662) 455-4943

NO.	DATE	BY	DESCRIPTION

REVISIONS

USDA Agricultural Research Service

USDA AGRICULTURAL RESEARCH SERVICE
SUGARCANE RESEARCH LABORATORY
HOUMA, LOUISIANA

HAVC CONTROLS

A-E FIRM	USDA
PROJECT MANAGER	REH
EPM	WN
DESIGNER	SME
PPM	XXX
CHECKED BY	DRL
SAFETY & HEALTH	CM
JOB #	5825
REAL PROPERTY	JS

PROJECT NO. XXX
DATE 05/20/2026

AGRICULTURAL RESEARCH SERVICE
FACILITIES ENGINEERING BRANCH
5106 SUNNYSIDE AVENUE
BELTSVILLE, MD 20705-5100

SHEET M-702
138 OF 176

J:\greenwood\2025 Jobs\5825 USDA Sugarcane Research Lab Houma LA\07 Working Folder\Mech\M-702.dwg
May 19, 2026 - 2:39pm

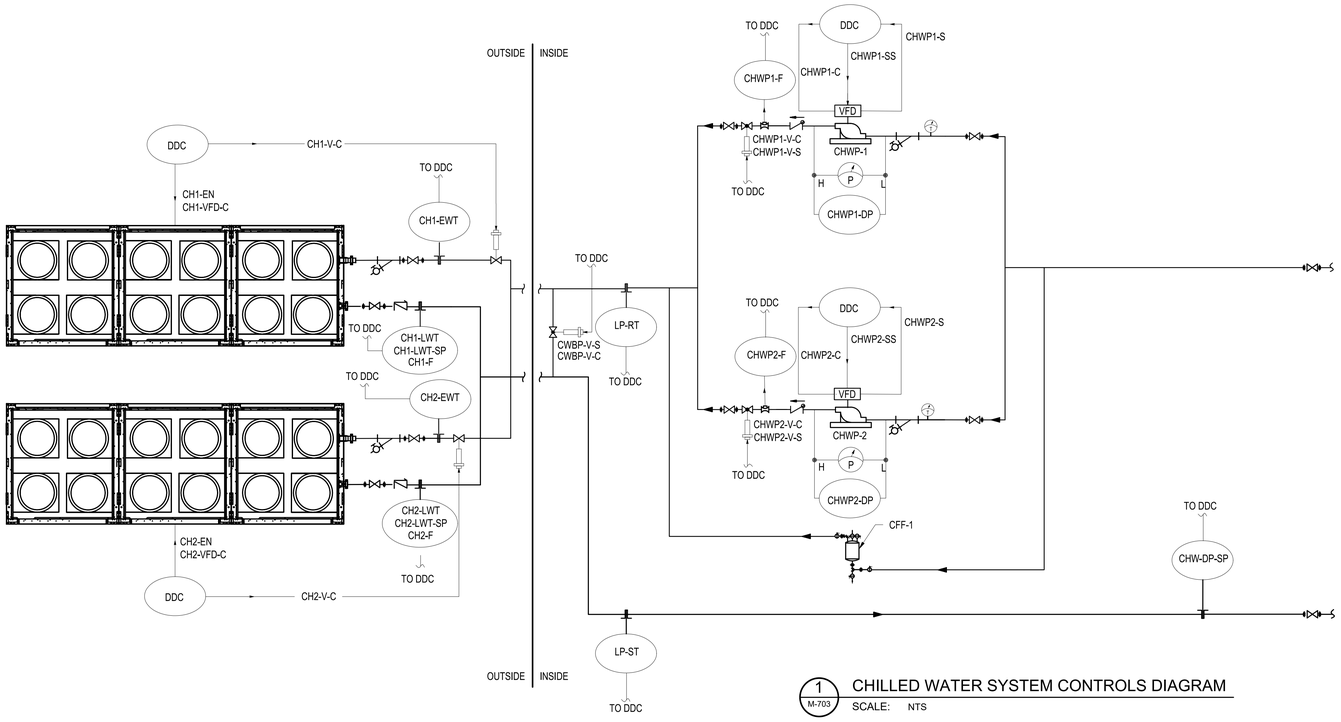

1 M-703 CHILLED WATER SYSTEM CONTROLS DIAGRAM

SCALE: NTS

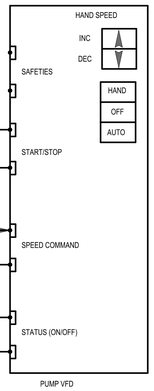

2 M-703 CHILLED WATER SYSTEM LADDER DIAGRAM

SCALE: NTS

						ALARMING	
FUNCTION	**POINT NAME**	**DESCRIPTION**	**SETTING (WITH UNITS)**	RANGE (WITH UNITS)	IO TYPE	ALARM CONDITION (SEE NOTES)	ALARM PRIORITY
PROOFS & SAFETIES	CH1-S	CHILLER #1 STATUS		ON/OFF	BI		
	CH1-ALM	CHILLER #1 FAILURE ALARM		ALM/NORMAL	BI	CHILLER FAILURE ALARM	CRITICAL
	CH2-S	CHILLER #2 STATUS		ON/OFF	BI		
	CH2-ALM	CHILLER #2 FAILURE ALARM		ALM/NORMAL	BI	CHILLER FAILURE ALARM	CRITICAL
	CWR-F	CHILLED WATER FLOW RATE		0-1000 GAL/MIN	AI	FLOW RATE BELOW MANUF MINIMUM	CRITICAL
	CH1-EWT	CHILLER #1 ENTERING WATER TEMPERATURE AT CHILLER		0 - 100°F	AI		
	CH1-LWT	CHILLER #1 LEAVING WATER TEMPERATURE AT CHILLER		0 - 100°F	AI		
	CH2-EWT	CHILLER #2 ENTERING WATER TEMPERATURE AT CHILLER		0 - 100°F	AI		
	CH2-LWT	CHILLER #2 LEAVING WATER TEMPERATURE AT CHILLER		0 - 100°F	AI		
		CHILLER MANUFACTURER'S PROOFS (SEE NOTE)		TBD	TBD		
		CHILLER MANUFACTURER'S SAFETIES (SEE NOTE)		TBD	TBD	CHILLER SAFETIES	CRITICAL
	LP-ST	LOOP CHILLED WATER SUPPLY TEMPERATURE		0 - 100°F			
	LP-RT	LOOP CHILLED WATER RETURN TEMPERATURE		0 - 100°F			
	CHWP1-S	CHILLED WATER PUMP #1 STATUS		ON/OFF	BI	PUMP FAILED TO START	CRITICAL
	CHWP2-S	CHILLED WATER PUMP #2 STATUS		ON/OFF	BI	PUMP FAILED TO START	CRITICAL
	CHWP1-VFD	CHILLED WATER PUMP #1 VARIABLE SPEED DRIVE FREQUENCY		0-60 Hz	AI	FREQ NOT EQUAL TO COMMAND	CRITICAL
	CHWP2-VFD	CHILLED WATER PUMP #2 VARIABLE SPEED DRIVE FREQUENCY		0-60 Hz	AI	FREQ NOT EQUAL TO COMMAND	CRITICAL
	CHWP1-DP	CHILLED WATER PUMP #1 DIFFERENTIAL PRESSURE		0-50 PSIG	AI		
	CHWP2-DP	CHILLED WATER PUMP #2 DIFFERENTIAL PRESSURE		0-50 PSIG	AI		
	CHWP1-V-S	CHILLED WATER PUMP #1 VALVE STATUS	TBD	0% - 100%	AI	VALVE FAILED TO OPEN/CLOSE	CRITICAL
	CHWP2-V-S	CHILLED WATER PUMP #2 VALVE STATUS	TBD	0% - 100%	AI	VALVE FAILED TO OPEN/CLOSE	CRITICAL
	CH1-V-S	CHILLER #1 VALVE STATUS	TBD	0% - 100%	AI	VALVE FAILED TO OPEN/CLOSE	CRITICAL
	CH2-V-S	CHILLER #2 VALVE STATUS	TBD	0% - 100%	AI	VALVE FAILED TO OPEN/CLOSE	CRITICAL
	CWBP-V-S	CHILLED WATER BYPASS VALVE STATUS	TBD	0% - 100%	AI	VALVE POSITION DOES NOT EQUAL COMMAND	CRITICAL
START/STOP	CH1-EN	CHILLER #1 ENABLE/DISABLE		ON/OFF	AO		
	CH2-EN	CHILLER #2 ENABLE/DISABLE		ON/OFF	AO		
	CHWP1-SS	CHILLED WATER PUMP #1 START/STOP		ON/OFF	AO		
	CHWP2-SS	CHILLED WATER PUMP #2 START/STOP		ON/OFF	AO		
CHILLED WATER TEMPERATURE CONTROL	CH1-LWT-SP	CHILLER #1 LEAVING WATER TEMPERATURE SETPOINT AT CHILLER	TBD	0 - 100°F	AO		
	CH2-LWT-SP	CHILLER #2 LEAVING WATER TEMPERATURE SETPOINT AT CHILLER	TBD	0 - 100°F	AO		
CHILLED WATER FLOW CONTROL	CH1-F	CHILLER #1 CHILLED WATER FLOW RATE AT CHILLER	SEE SCHEDULES	0-1000 GAL/MIN	AI		
	CH2-F	CHILLER #2 CHILLED WATER FLOW RATE AT CHILLER	SEE SCHEDULES	0-1000 GAL/MIN	AI		
	CH1-VFD-C	CHILLER #1 PUMP VARIABLE SPEED DRIVE FREQUENCY COMMAND	TBD (56 Hz is max target)	0-60 Hz	AO		
	CH2-VFD-C	CHILLER #2 PUMP VARIABLE SPEED DRIVE FREQUENCY COMMAND	TBD (56 Hz is max target)	0-60 Hz	AO		
	CH1-V-C	CHILLER #1 VALVE COMMAND		0% - 100%	AO		
	CH2-V-C	CHILLER #2 VALVE COMMAND		0% - 100%	AO		
	CHWP1-F	CHILLED WATER PUMP #1 FLOW RATE	SEE SCHEDULES	0-1000 GAL/MIN	AI		
	CHWP2-F	CHILLED WATER PUMP #2 FLOW RATE	SEE SCHEDULES	0-1000 GAL/MIN	AI		
	CHWP1-C	CHILLED WATER PUMP #1 VFD COMMAND	TBD (56 Hz is max target)	0-60 Hz	AO		
	CHWP2-C	CHILLED WATER PUMP #2 VFD COMMAND	TBD (56 Hz is max target)	0-60 Hz	AO		
	CW-DP-SP	CHILLED WATER DIFFERENTIAL PRESSURE SETPOINT	TBD	0-50PSIG	AO		
	CHWP1-V-C	CHILLED WATER PUMP #1 VALVE COMMAND	TBD	0% - 100%	AO		
	CHWP2-V-C	CHILLED WATER PUMP #2 VALVE COMMAND	TBD	0% - 100%	AO		
	CHBP-V-C	CHILLED WATER BYPASS VALVE COMMAND	TBD	0% - 100%	AO		

NOTES:

1. THE CONTRACTOR MUST COMPLETE THE POINTS SCHEDULE AS INDICATED IN THE SPECIFICATION AND IN ACCORDANCE WITH THIS DRAWING.
2. UNIT MANUFACTURERS PROOFS AND SAFETIES: THE CONTRACTOR MUST SHOW EACH PROOF AND SAFETY AS A SEPARATE ROW.
3. "TBD" = TO BE DETERMINED DURING COMMISSIONING.

3 M-703 CHILLED WATER SYSTEM CONTROLS POINTS LIST

SCALE: NTS

SEQUENCE OF OPERATION
CH-1, CH-2, CHWP-1, CHWP-2:

CHILLED WATER SYSTEM:

START/STOP: THE INITIAL CHILLED WATER PLANT START UP WILL BE ACCOMPLISHED BY A COMMAND THROUGH THE DDC OR MANUALLY THROUGH THE CHILLER CONTROL PANEL.

A. ONCE THE SYSTEM IS ENERGIZED AND THE CONTROL VALVES ARE OPEN, THE LEAD CHILLED WATER PUMP WILL START AND RUN CONTINUOUSLY.

B. TIME DELAYS DESCRIBED IN THIS SEQUENCE WILL BE FULLY ADJUSTABLE THROUGH THE DDC AND PRIOR TO INITIAL STARTUP SET TO RECOMMENDATIONS OF THE CHILLER MANUFACTURER.

C. CHILLED WATER SYSTEM OPERATING SCHEDULE TO BE SET THROUGH THE DDC SYSTEM AND BE FULLY ADJUSTABLE. SET THE INITIAL SCHEDULE AS DIRECTED BY THE CONTRACTING OFFICER.

CHILLED WATER PUMPS SEQUENCE:

A. THE SYSTEM IS STARTED AND STOPPED MANUALLY FROM THE H-O-A SWITCH, OR AUTOMATICALLY BY THE DDC WHEN THE H-O-A SWITCH IS IN THE AUTO POSITION.

B. IF THE LEAD PUMP FAILS TO PROVE FLOW, IT WILL BE DE-ENERGIZE AND THE LAG PUMP WILL START.

C. LEAD/LAG SELECTION WILL BE DECIDED BASED UPON THE NUMBER OF STARTS AND TOTAL RUN TIMES. THE PUMP WITH THE LEAST NUMBER OF STARTS WILL ALWAYS BE STARTED FIRST. WHILE THE PUMP WITH THE GREATEST RUN TIME WILL BE STOPPED FIRST.

D. FLOW CONTROL: THE VFD MUST MODULATE THE PUMP SPEED OF THE PUMP BASED ON THE INPUT FROM THE CHILLED WATER DIFFERENTIAL PRESSURE SENSOR. SOFTWARE ADJUSTABLE MINIMUM ON AND OFF TIMES FOR THE CHILLER PUMPS WILL PREVENT SHORT CYCLING.

E. BYPASS VALVE MUST OPEN ONLY TO MAINTAIN MINIMUM FLOW THROUGH THE CHILLER AS MEASURED BY THE FLOW MEASURING DEVICE.

F. CHILLER CONTROL: CHILLER MUST MODULATE TO MAINTAIN LEAVING WATER TEMPERATURE AS SCHEDULED (ADJUSTABLE).

CHILLER START SEQUENCE: THE CHILLER START SEQUENCE WILL BE AS FOLLOWS:

A. ON START-UP THE DDC SELECTS THE LEAD CHILLER AND ISSUES A START COMMAND TO THE LEAD PUMP AND FLOW THROUGH THE EVAPORATOR BUNDLE IS PROVEN BY THE CHILLED WATER FLOW MEASURING DEVICE.

B. ALARMS:

ALARM	REPORT	ACTION
- CHWS HIGH TEMPERATURE	YES	-
- CHWR HIGH TEMPERATURE	YES	-
- CHWS LOW TEMPERATURE	YES	-
- CHWR LOW TEMPERATURE	YES	-
- CHWP FAILURE	YES	MARK PUMP HAS FAILED

DDC COMMUNICATION: THE DDC SYSTEM WILL COMMUNICATE WITH THE CHILLER THROUGH THE FACTORY FURNISHED INTERFACE. CONTRACTOR MUST PROVIDE ANY ADDITIONAL POINTS LISTED IN THE POINTS SCHEDULE THAT ARE NOT FACTORY FURNISHED.

EVENT LOG: MAINTAIN THE DDC SYSTEM A HISTORICAL RECORD OF ALL ALARMS AND SIGNIFICANT CONTROL CHANGES IMPLEMENTED OR RECEIVED BY THE DDC SYSTEM. MAINTAIN A RECORD OF ALL LOG ON REQUESTS AND OPERATOR CHANGES.

RUN TIME MAINTENANCE: MAINTAIN FOR CHILLER AND EACH PUMP A RECORD OF THE RUN TIME AND NUMBER OF STARTS.

POWER FAILURE: IN THE EVENT OF POWER FAILURE THE LEAD PUMP WILL BE AUTOMATICALLY STARTED THROUGH THE DDC AND THE AUTOMATIC SEQUENCE WILL BE RESTARTED.

4 M-703 CHILLED WATER SYSTEM CONTROLS

SCALE: NTS

STATE OF LOUISIANA — DAVID R. LOPEZ — 05/20/26 — PROFESSIONAL ENGINEER

NO.	DATE	BY	DESCRIPTION

REVISIONS

Johnson Mirmiran Adams PC — ARCHITECTS/ENGINEERS PLANNING SURVEYING GEOARCHITECT — P.O. BOX 513, GREENWOOD, MISSISSIPPI - (662) 455-6443

USDA Agricultural Research Service

USDA AGRICULTURAL RESEARCH SERVICE
SUGARCANE RESEARCH LABORATORY
HOUMA, LOUISIANA

HVAC CONTROLS

A-E FIRM	USDA
PROJECT MANAGER	REH
EPM	WN
DESIGNER	SME
PPM	XXX
CHECKED BY	DRL
SAFETY & HEALTH	CM
JOB #	5825
REAL PROPERTY	JS

PROJECT NO. XXX
DATE 05/20/2026

AGRICULTURAL RESEARCH SERVICE
FACILITIES ENGINEERING BRANCH
5106 SUNNYSIDE AVENUE
BELTSVILLE, MD 20705-5100

SHEET M-703
139 OF 176

J:\greenwood\2025_Jobs\5825 USDA Sugarcane Research Lab Houma LA\07 Working Folder\Mech\M-703.dwg
May 19, 2026 - 7:29pm

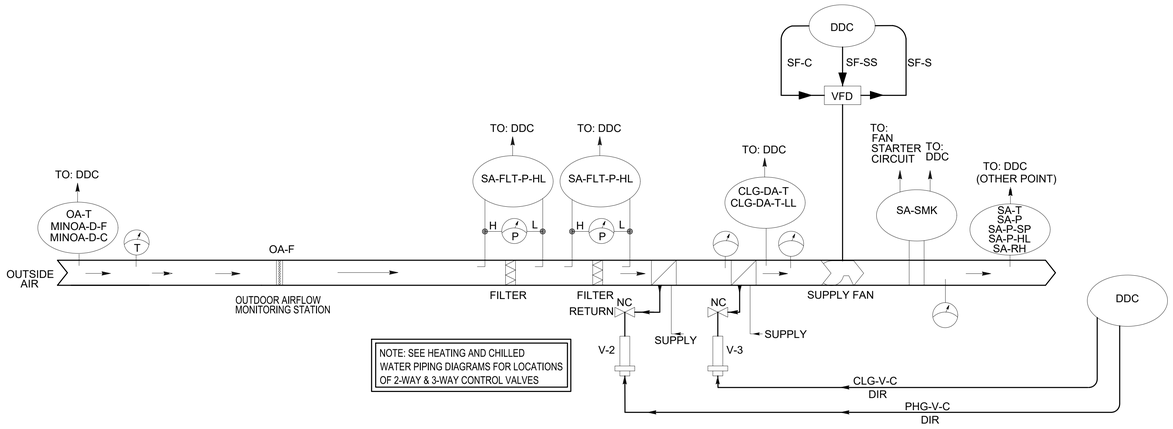

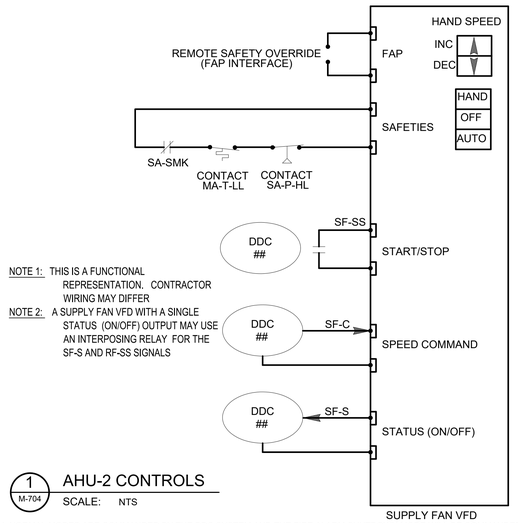

1 M-704 AHU-2 CONTROLS

SCALE: NTS

						ALARMING	
FUNCTION	POINT NAME	DESCRIPTION	SETTING (WITH UNITS)	RANGE (WITH UNITS)	IO TYPE	ALARM CONDITION (SEE NOTES)	ALARM PRIORITY
PROOFS & SAFETIES	SF-S	SUPPLY FAN STATUS		ON/OFF	BI	SUPPLY FAN PROOF FAILED	INFO
	SA-SMK	SUPPLY AIR SMOKE		ALM/NORMAL	BI	ALM	CRITICAL
	CLG-DA-T-LL	COOLING COIL DISCHARGE AIR TEMP LOW LIMIT (FREEZESTAT)	39°F	ALM/NORMAL	BI	ALM	CRITICAL
	SA-P-HL	SUPPLY AIR PRESSURE HIGH LIMIT	3" W.C.	ALM/NORMAL	BI	ALM	CRITICAL
START/ STOP	SYS-OCC-C	OCCUPANCY COMMAND		OCCUPIED(1)/UNOCCUPIED(2)	NET-IN		
	SYS-OCC	SYSTEM OCCUPANCY (ACTUAL)		OCCUPIED(1)/UNOCCUPIED(2)	NET-OUT		
	SF-SS	SUPPLY FAN START/STOP		ON/OFF	BO		
	BLDG-T	BUILDING TEMPERATURE (NIGHT STAT)		0 - 130°F	AI, NET-IN	BLDG-T LESS THAN BLDG-T-LL	CRITICAL
	BLDG-T-LL	BUILDING TEMPERATURE LOW LIMIT	55°F				
SUPPLY FAN SPEED CONTROL	SF-C	SUPPLY FAN COMMAND		0-100%	AO		
	SA-P	SUPPLY AIR PRESSURE		0 - 5" W.C.	AI, NET-OUT	SYSTEM HAS BEEN IN OCCUPIED MODE FOR MORE THAN 5 MINUTES AND SA-P IS MORE THAN 20% ABOVE OR BELOW SA-P-SP	CRITICAL
	SA-P-SP	SUPPLY AIR PRESSURE SETPOINT	SEE AHU SCHEDULE				
	SUPPLY FAN CONTROL LOOP CONFIGURATION SETTINGS	PROPORTIONAL CONSTANT	TBD				
		INTEGRAL CONSTANT	TBD				
		BIAS	TBD				
		MAXIMUM OUTPUT	TBD				
		MINIMUM OUTPUT	TBD				
OUTDOOR AIR	OA-D-C	OUTSIDE AIR DAMPER COMMAND	0-100%				
	OUTSIDE AIR DAMPER CONTROL LOOP CONFIGURATION SETTINGS	PROPORTIONAL CONSTANT	TBD				
		INTEGRAL CONSTANT	TBD				
		BIAS	TBD				
SUPPLY AIR TEMPERATURE	SA-T	MAXIMUM OUTPUT	TBD				
		MINIMUM OUTPUT	TBD			SYSTEM HAS BEEN IN OCCUPIED MODE FOR MORE THAN 5 MINUTES AND SA-T MORE THAN 10 DEG F ABOVE OR BELOW SETPOINT	INFO
		SUPPLY AIR TEMPERATURE		0 - 130°F	AI		
	SA-RH	SUPPLY AIR RELATIVE HUMIDITY		0-100% RH	AO		
	CLG-V-C	COOLING VALVE COMMAND		0-100% OPEN	AO		
	PHG-V-C	PREHEAT VALVE COMMAND		0-100% OPEN	AO		
	CLG-DA-T	COOLING COIL DISCHARGE AIR TEMPERATURE	AS SCHEDULED (ADJ.)	0 - 130°F	AI	ALM	CRITICAL
	SA-T-SP	SUPPLY AIR TEMPERATURE SETPOINT	AS SCHEDULED (ADJ.)	0 - 130°F	AI		
	COOLING VALVE CONTROL LOOP CONFIGURATION SETTINGS	THROTTLING RANGEPROPORTIONAL GAIN	TBD				
		INTEGRAL CONSTANT	TBD				
		BIAS	TBD				
		MAXIMUM OUTPUT MINIMUM OUTPUT	TBD				
OTHER POINTS	RA-T	RETURN AIR TEMPERATURE		0 - 130°F	AI		
	OA-T	OUTDOOR AIR TEMPERATURE		0 - 130°F	AI		
	SA-PFLT-P-HL	PRE-FILTER PRESSURE HIGH LIMIT SWITCH	1" W.C.	ALM/NORMAL	BI	ALM	CRITICAL
	SA-FLT-P-HL	MIXED AIR FILTER PRESSURE HIGH LIMIT SWITCH	1" W.C.	ALM/NORMAL	BI	ALM	CRITICAL

NOTES:

1. THE CONTRACTOR MUST COMPLETE THE POINTS SCHEDULE AS INDICATED IN THE SPECIFICATION AND IN ACCORDANCE WITH THIS DRAWING.
2. UNIT MANUFACTURERS PROOFS AND SAFETIES: THE CONTRACTOR MUST SHOW EACH PROOF AND SAFETY AS A SEPARATE ROW.
3. UNIT STATUS: SERVES AS A MONITORED POINT AT THE M&C SOFTWARE (FRONT-END) AND AS A HEATING/COOLING REQUEST TO THE BOILER, AND/OR CHILLER SERVING THIS SYSTEM.
4. "TBD" = TO BE DETERMINED DURING COMMISSIONING.

SEQUENCE OF OPERATION
AHU-2

GENERAL OPERATING MODES: ALL NORMAL MODES ARE COMMANDED BY THE DDC SYSTEM AND THE FIRE ALARM SHUTDOWN MODE WILL BE COMMANDED BY A SIGNAL FROM THE FIRE ALARM SYSTEM. THE DDC SYSTEM WILL HAVE OPTIMUM START/STOP SCHEDULES, NIGHTTIME HIGH AND LOW SETPOINTS, OPERATOR ADJUSTABLE OVERRIDE TIMES, AND DEMAND LIMIT PARAMETERS.

1. WARMUP/COOLDOWN MODE: WHEN SCHEDULED BY THE DDC, THE SYSTEM OPERATION WILL BE ENABLED FOR COOLING AND HEATING ONLY. AFTER THE DIFFERENTIAL PROVES FAN OPERATION, ENABLE THE TEMPERATURE CONTROL.
2. OCCUPIED MODE: WHEN SCHEDULED BY THE DDC, THE SYSTEM ENTERS THE OCCUPIED MODE. THE OPERATION MODE IS IDENTICAL TO THE WARM/COOLDOWN MODE. FAN SAHLL MODULATE TO MAINTAIN 8 AIR CHANGES PER HOUR FOR LABORATORY SPACES.
3. UNOCCUPIED MODE: WHEN SCHEDULED BY THE DDC, THE SYSTEM OPERATION WILL MODULATE TO MAINTAIN 4 AIR CHANGES PER HOUR FOR LABORATORY SPACES. NIGHT TIME SETBACK TEMPERATURES MUST BE 10 DEGF (ADJ.) BELOW INDOOR DESIGN HEATING CONDITIONS BUT NOT LOWER THAN 55 DEGF AND 5 DEGF (ADJ.) ABOVE INDOOR COOLING DESIGN CONDITIONS BUT NOT HIGHER THAN 85 DEGF. (UNITS MUST BE PROGRAMMED TO RUN IN THE OCCUPIED MODE AT ALL TIMES). UNOCCUPIED MODE MUST ONLY BE PROVIDED AS A SYSTEM FEATURE FOR THE USER.
4. FIRE ALARM SHUTDOWN MODE: ALL FANS WILL STOP AND THROUGH AN ADJUSTABLE DELAY ALL SYSTEM DAMPERS WILL CLOSE.

START CONTROL: WHEN THE HAND OFF AUTO (H-O-A) SWITCH INITIATES A START SIGNAL IN THE HAND POSITION, OR THE DDC INITIATES A START SIGNAL WITH THE H-O-A IN THE AUTO POSITION, THE SYSTEM WILL ENTER THE WARM-UP/COOLDOWN MODE. THE SUPPLY FAN WILL START AND RUN CONTINUOUSLY. THE VOLUME CONTROL WILL BE AS DESCRIBED IN THE VARIABLE AIR VOLUME CONTROL SEQUENCE THROUGH A 15 MINUTE TIME DELAY (0 TO 60 MINUTES ADJ.). THE SYSTEM WILL ENTER THE OCCUPIED MODE UPON A SIGNAL FROM THE DDC SYSTEM. THE OUTDOOR AIR DAMPER WILL OPEN AND INTERLOCKED EXHAUST FANS WILL START. THE OCCUPIED MODE WILL BE INITIATED THOUGH A PREPROGRAMMED SCHEDULE IN THE DDC SYSTEM OR BY A MANUAL COMMAND THROUGH THE DDC SYSTEM.

VARIABLE VOLUME CONTROL: THE STATIC PRESSURE SENSOR/TRANSMITTER IN THE MAIN SUPPLY DUCT WILL BE LOCATED APPROXIMATELY 3/4 OF THE DUCTWORK DISTANCE DOWNSTREAM OF THE AHU. WITH THE SUPPLY AIR OPERATING, THE DDC SYSTEM WILL MODULATE THE SUPPLY PLUG FAN ACTUATOR TO MAINTAIN THE DUCT SYSTEM PRESSURE. SETPOINT MUST BE REDUCED TO 25% (ADJ.) DURING OCCUPIED MODE.

COOLING COIL CONTROL: WHEN THE FAN STATUS IS PROVEN, THE TEMPERATURE CONTROL IS ACTIVATED,THE DISCHARGE AIR SENSOR WILL MODULATE THE CHILLED WATER COIL VALVE TO MAINTAIN A DISCHARGE AIR DEWPOINT TEMPERATURE AS SCHEDULED (ADJ.).

PREHEAT COIL CONTROL: WHEN THE FAN STATUS IS PROVEN, THE TEMPERATURE CONTROL IS ACTIVATED, THE DISCHARGE AIR SENSOR WILL MODULATE THE REHEAT HEATING WATER COIL VALVE TO MAINTAIN A DISCHARGE AIR SETPOINT TEMPERATURE OF 60 DEG. F (ADJ).

SHUTDOWN CONTROL: WHEN THE H-O-A SWITCH INITIATES A STOP SIGNAL THROUGH THE OFF POSITION OR THE DDC INITIATES A STOP SIGNAL WITH THE H-O-A IN THE AUTO POSITION OF THE DUCT WORK STATIC PRESSURE EXCEEDS THE SETPOINT OF THE MANUAL RESET HIGH STATIC SWITCH. THE SUPPLY FAN WILL STOP THROUGH AN ADJUSTABLE TIME DELAY SET FOR 15 SECONDS (0 TO 60 SECONDS ADJ.) THE OUTDOOR AIR DAMPER WILL CLOSE. THE SAME SEQUENCE FOR FAN SHUTDOWN CONTROL WILL ALSO OCCUR ON A SIGNAL FROM THE FIRE ALARM SYSTEM.

A. A MANUALLY RESET DIFFERENTIAL PRESSURE SWITCH ON THE AHU DISCHARGE AIR PLENUM WILL BE WIRED THROUGH THE HAND AND AUTO POSITION OF THE H-O-A SWITCH TO STOP THE AHU FAN IF THE DUCT PRESSURE EXCEEDS ITS SETPOINT.

FILTER STATUS: A DIFFERENTIAL PRESSURE SENSOR ACROSS THE AHU FILTER SECTION WILL INDICATE STATUS FROM CLEAN MEDIA AT STARTUP TO SOILED MEDIA CONDITION.

A. THE DDC WILL INDICATE PERCENTAGE LOADED. INITIAL PRESSURE DROP IN ACCORDANCE WITH FILTER MEDIA MANUFACTURER'S RECOMMENDATION, SOILED FILTER VALUE OF 10 INCHES WATER COLUMN.
B. THE DDC WILL SET A MAINTENANCE ALARM AT A PRESSURE DROP OF 0 INCHES (0-2" ADJ.).

ALARMS: PRINT DIAGNOSTIC ALARM TO DDC IF SEQUENCE OF OPERATION CANNOT BE ACCOMPLISHED DURING NORMAL SCHEDULED HOURS OF OPERATION. OPERATORS WILL BE ABLE TO VIEW ALL POINTS OF CONTROL PRIOR TO FAILURE.

STATE OF LOUISIANA
DENNIS M. TAYLOR
05/20/26
PROFESSIONAL ENGINEER

NO.	DATE	BY	DESCRIPTION

REVISIONS

Johnson Mˢ Adams PSM P.A.
PO BOX 513, GREENWOOD, MISSISSIPPI - (662) 455-6963

A-E FIRM	USDA
PROJECT MANAGER REH	EPM WN
DESIGNER SME	PPM XXX
CHECKED BY DRL	SAFETY & HEALTH CM
JOB # 5825	REAL PROPERTY JS

USDA Agricultural Research Service

USDA AGRICULTURAL RESEARCH SERVICE
SUGARCANE RESEARCH LABORATORY
HOUMA, LOUISIANA

HVAC CONTROLS

PROJECT NO. XXX
DATE 05/20/2026

AGRICULTURAL RESEARCH SERVICE
FACILITIES ENGINEERING BRANCH
5106 SUNNYSIDE AVENUE
BELTSVILLE, MD 20705-5100

SHEET M-704
140 OF 176

J:\greenwood\2025 Jobs\5825 USDA Sugarcane Research Lab Houma LA\07 Working Folder\Mech\M-704.dwg
May 19, 2026 - 2:29pm

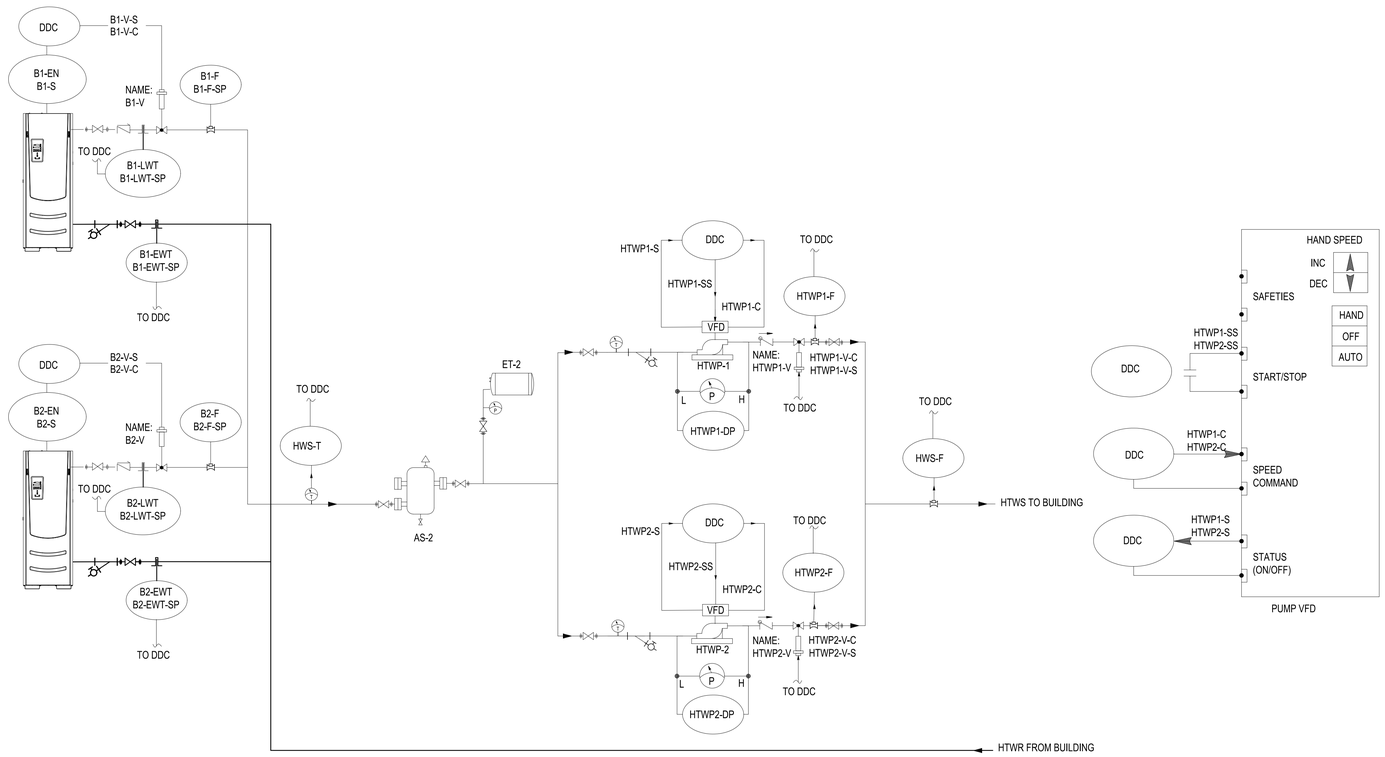

1 M-705 HEATING WATER SYSTEM DIAGRAM

SCALE: NTS

FUNCTION	POINT NAME	DESCRIPTION	SETTING (WITH UNITS)	RANGE (WITH UNITS)	IO TYPE	ALARMING	
						ALARM CONDITION (SEE NOTES)	ALARM PRIORITY
PROOFS & SAFETIES	B1-S	BOILER #1 STATUS		ON/OFF	BI	BOILER ON/OFF	INFO
	B1-ALM	BOILER #1 FAILURE ALARM		ALM/NORMAL	BI	BOILER FAILURE ALARM	CRITICAL
	B2-S	BOILER #2 STATUS		ON/OFF	BI	BOILER ON/OFF	INFO
	B2-ALM	BOILER #2 FAILURE ALARM		ALM/NORMAL	BI	BOILER FAILURE ALARM	CRITICAL
	B1-EWT	BOILER #1 ENTERING WATER TEMPERATURE	BELOW 100°F	0 - 200°F	AI	EWT BELOW 100°F	INFO
	B1-LWT	BOILER #1 LEAVING WATER TEMPERATURE	110°F OR ABOVE 150°F	0 - 200°F	AI	LWT BELOW 110°F OR ABOVE 150°F	CRITICAL
	B2-EWT	BOILER #2 ENTERING WATER TEMPERATURE	BELOW 100°F	0 - 200°F	AI	EWT BELOW 100°F	INFO
	B2-LWT	BOILER #2 LEAVING WATER TEMPERATURE	110°F OR ABOVE 150°F	0 - 200°F	AI	LWT BELOW 110°F OR ABOVE 150°F	CRITICAL
		BOILER MANUFACTURER'S PROOFS (SEE NOTE)		TBD	TBD	BOILER PROOFS	CRITICAL
		BOILER MANUFACTURER'S SAFETIES (SEE NOTE)		TBD	TBD	BOILER SAFETIES	CRITICAL
	B1-F	BOILER #1 FLOW	PER BOILER MFG	0-1000 GAL/MIN	AI	FLOW RATE BELOW MFG. MIN.	CRITICAL
	B2-F	BOILER #2 FLOW	PER BOILER MFG	0-1000 GAL/MIN	AI	FLOW RATE BELOW MFG. MIN.	CRITICAL
	HTWP1-S	HEATING WATER PUMP #1 STATUS	5 MINUTES TO ALARM	ON/OFF	BI	PUMP FAILED TO START	CRITICAL
	HTWP2-S	HEATING WATER PUMP #2 STATUS	5 MINUTES TO ALARM	ON/OFF	BI	PUMP FAILED TO START	CRITICAL
	HTWP1-VFD	HEATING WATER PUMP #1 VARIABLE SPEED DRIVE FREQUENCY	TBD (56 HZ IS TARGET)	0-90 Hz	AI	FREQ NOT EQUAL TO COMMAND	CRITICAL
	HTWP2-VFD	HEATING WATER PUMP #2 VARIABLE SPEED DRIVE FREQUENCY	TBD (56 HZ IS TARGET)	0-90 Hz	AI	FREQ NOT EQUAL TO COMMAND	CRITICAL
	HTWP1-DP	HEATING WATER PUMP #1 DIFFERENTIAL PRESSURE	TBD	0-50 PSIG	AI	DP 10% ABOVE MAX. FOR 10 MIN.	CRITICAL
	HTWP2-DP	HEATING WATER PUMP #2 DIFFERENTIAL PRESSURE	TBD	0-50 PSIG	AI	DP 10% ABOVE MAX. FOR 10 MIN.	CRITICAL
	HTWP1-V-S	HEATING WATER PUMP #1 VALVE STATUS	OPEN/CLOSE	0% - 100%	AI	VALVE FAILED TO OPEN/CLOSE	CRITICAL
	HTWP2-V-S	HEATING WATER PUMP #2 VALVE STATUS	OPEN/CLOSE	0% - 100%	AI	VALVE FAILED TO OPEN/CLOSE	CRITICAL
	B1-EN	BOILER #1 ENABLE/DISABLE		ON/OFF	AO		
	B2-EN	BOILER #2 ENABLE/DISABLE		ON/OFF	AO		
START/STOP							
	HTWP1-SS	HEATING WATER PUMP #1 START/STOP		ON/OFF	AO		
	HTWP2-SS	HEATING WATER PUMP #2 START/STOP		ON/OFF	AO		
HEATING WATER TEMPERATURE CONTROL	B1-LWT-SP	BOILER #1 LEAVING WATER TEMPERATURE SETPOINT AT BOILER	AS SCHEDULED	0 - 200°F	AO		
	B1-EWT-SP	BOILER #1 LEAVING WATER TEMPERATURE SETPOINT AT BOILER	AS SCHEDULED	0 - 200°F	AO		
	B2-LWT-SP	BOILER #2 LEAVING WATER TEMPERATURE SETPOINT AT BOILER	AS SCHEDULED	0 - 200°F	AO		
	B2-EWT-SP	BOILER #2 LEAVING WATER TEMPERATURE SETPOINT AT BOILER	AS SCHEDULED	0 - 200°F	AO		
	HTWP1-C	HEATING WATER PUMP #1 VFD COMMAND	TBD (56 Hz is max target)	0-90 Hz	AO		
	HTWP2-C	HEATING WATER PUMP #2 VFD COMMAND	TBD (56 Hz is max target)	0-90 Hz	AO		
HEATING WATER FLOW CONTROL	HTW-DP-SP	HEATING WATER DIFFERENTIAL PRESSURE SETPOINT	TBD	0-50PSIG	AO		
	HTWP1-V-C	HEATING WATER PUMP #1 VALVE COMMAND	OPEN/CLOSE	0% - 100%	AO		
	HTWP2-V-C	HEATING WATER PUMP #2 VALVE COMMAND	OPEN/CLOSE	0% - 100%	AO		
	B1-F-SP	BOILER HOT WATER FLOW RATE SETPOINT AT BOILER	AS SCHEDULED	0-1000 GAL/MIN	AO		
	B2-F-SP	BOILER HOT WATER FLOW RATE SETPOINT AT BOILER	AS SCHEDULED	0-1000 GAL/MIN	AO		
OTHER POINTS	HTWP1-F	HEATING WATER PUMP #1 FLOW RATE	AS SCHEDULED	0-1000 GAL/MIN	AI		
	HTWP2-F	HEATING WATER PUMP #2 FLOW RATE	AS SCHEDULED	0-1000 GAL/MIN	AI		

NOTES:

1. THE CONTRACTOR MUST COMPLETE THE POINTS SCHEDULE AS INDICATED IN THE SPECIFICATION AND IN ACCORDANCE WITH THIS DRAWING.
2. UNIT MANUFACTURERS PROOFS AND SAFETIES: THE CONTRACTOR MUST SHOW EACH PROOF AND SAFETY AS A SEPARATE ROW.
3. "TBD" = TO BE DETERMINED DURING COMMISSIONING.

2 M-705 HEATING WATER SYSTEM CONTROLS POINTS LIST

SCALE: NTS

SEQUENCE OF OPERATION

B-1, B-2, HTWP-1, HTWP-2:

HEATING WATER SYSTEM:

START/STOP: THE INITIAL HEATING WATER PLANT START UP WILL BE ACCOMPLISHED BY A COMMAND THROUGH THE DDC .

A. ONCE THE SYSTEM IS ENERGIZED AND THE CONTROL VALVES ARE OPEN, THE LEAD HEATING WATER PUMP WILL START AND RUN CONTINUOUSLY.

B. TIME DELAYS DESCRIBED IN THIS SEQUENCE WILL BE FULLY ADJUSTABLE THROUGH THE DDC AND PRIOR TO INITIAL STARTUP SET TO RECOMMENDATIONS OF THE BOILER MANUFACTURER.

C. HEATING WATER SYSTEM OPERATING SCHEDULE TO BE SET THROUGH THE DDC SYSTEM AND BE FULLY ADJUSTABLE. SET THE INITIAL SCHEDULE AS DIRECTED BY THE CONTRACTING OFFICER.

HEATING WATER TEMPERATURE CONTROL:

A. BOILER MUST MODULATE TO MAINTAIN LEAVING WATER TEMPERATURE AS SCHEDULED.

HEATING WATER PUMPS SEQUENCE:

A. THE SYSTEM IS STARTED AND STOPPED MANUALLY FROM THE H-O-A SWITCH, OR AUTOMATICALLY BY THE DDC WHEN THE H-O-A SWITCH IS IN THE AUTO POSITION.

B. IF THE LEAD PUMP FAILS TO PROVE FLOW, IT WILL DE-ENERGIZE AND THE STANDBY PUMP WILL START.

C. LEAD/LAG SELECTION WILL BE DECIDED BASED UPON THE NUMBER OF STARTS AND TOTAL RUN TIMES. THE PUMP WITH THE LEAST NUMBER OF STARTS WILL ALWAYS BE STARTED FIRST. WHILE THE PUMP WITH THE GREATEST RUN TIME WILL BE STOPPED FIRST.

D. FLOW CONTROL: THE VFD MUST MODULATE THE PUMP SPEED OF THE PUMP BASED ON THE INPUT FROM THE HEATING WATER DIFFERENTIAL PRESSURE SENSOR. SOFTWARE ADJUSTABLE MINIMUM ON AND OFF TIMES FOR THE HEATING WATER PUMPS WILL PREVENT SHORT CYCLING.

BOILER START SEQUENCE: THE BOILER START SEQUENCE WILL BE AS FOLLOWS:

A. ON START UP: THE DDC SELECTS THE LEAD BOILERS AND ISSUES A START COMMAND TO THE LEAD PUMP. THE BOILERS MUST BE ENABLED AFTER PUMP STATUS IS PROVEN AND MUST RUN SUBJECT TO INTERNAL SAFETIES AND CONTROLS.

B. ALARMS:

	ALARM	REPORT	ACTION
-	HTWS HIGH TEMPERATURE	YES	-
-	HTWR HIGH TEMPERATURE	YES	-
-	HTWS LOW TEMPERATURE	YES	-
-	HTWR LOW TEMPERATURE	YES	-
-	HTWP FAILURE	YES	MARK PUMP AS FAILED

DDC COMMUNICATION: THE DDC SYSTEM WILL COMMUNICATE WITH THE BOILERS THROUGH THE FACTORY FURNISHED INTERFACE. CONTRACTOR MUST PROVIDE ANY ADDITIONAL POINTS LISTED IN THE POINTS SCHEDULE THAT ARE NOT FACTORY FURNISHED.

EVENT LOG: MAINTAIN THE DDC SYSTEM A HISTORICAL RECORD OF ALL ALARMS AND SIGNIFICANT CONTROL CHANGES IMPLEMENTED OR RECEIVED BY THE DDC SYSTEM. MAINTAIN A RECORD OF ALL LOG ON REQUESTS AND OPERATOR CHANGES.

RUN TIME MAINTENANCE: MAINTAIN FOR BOILER AND EACH PUMP A RECORD OF THE RUN TIME AND NUMBER OF STARTS.

POWER FAILURE: IN THE EVENT OF POWER FAILURE THE LEAD PUMP WILL BE AUTOMATICALLY STARTED THROUGH THE DDC AND THE AUTOMATIC SEQUENCE WILL BE RESTARTED.

3 M-705 HEATING WATER SYSTEM CONTROLS

SCALE: NTS

STATE OF LOUISIANA
MICHAEL R. HINOJOSA
05/20/26
PROFESSIONAL ENGINEER

NO.	DATE	BY	DESCRIPTION

REVISIONS

Johnson Mˢ Adams PPM P.A.
ARCHITECTS/ENGINEERS PLANNING SURVEYING MANAGEMENT
P.O. BOX 913, GREENWOOD, MISSISSIPPI – (662) 455-6423

USDA Agricultural Research Service

USDA AGRICULTURAL RESEARCH SERVICE
SUGARCANE RESEARCH LABORATORY
HOUMA, LOUISIANA

HVAC CONTROLS

A-E FIRM	USDA
PROJECT MANAGER	REH
EPM	WN
DESIGNER	SME
PPM	XXX
CHECKED BY	DRL
SAFETY & HEALTH	CM
JOB #	5825
REAL PROPERTY	JS

PROJECT NO. XXX	AGRICULTURAL RESEARCH SERVICE FACILITIES ENGINEERING BRANCH 5106 SUNNYSIDE AVENUE BELTSVILLE, MD 20705-5100	SHEET M-705
DATE 05/20/2026		141 OF 176

J:\gromero\2025 Jobs\5825 USDA Sugarcane Research Lab Houma LA\07 Working Folder\Mech\M-705.dwg
May 19, 2026 - 2:53pm

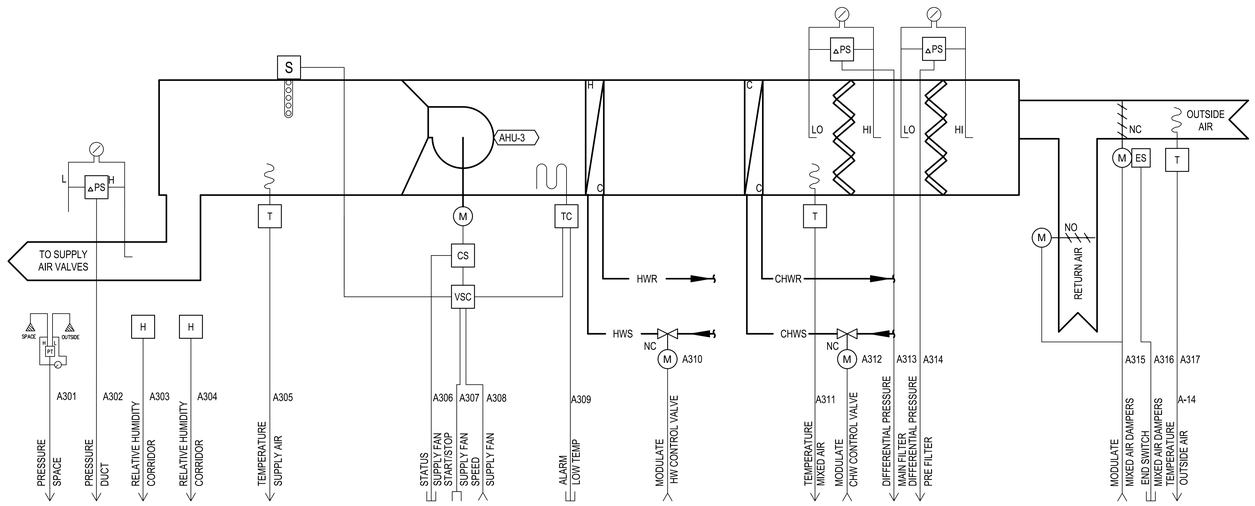

EXISTING AHU-3 CONTROL SYSTEM OBJECT LIST

TAG	OBJECT NAME	TYPE	ALARM	GRAPHIC	TREND	NOTES
A301	AHU-3 SPACE STATIC PRESSURE	AI	0.05	AHU3	5 min	Report 1
A302	AHU-3 SUPPLY AIR DUCT PRESSURE	AI	0.25/2.0	AHU3	5 min	Report 1
A303	AHU-3 SPACE RELATIVE HUMIDITY	AI	20%/80%	AHU3	5 min	Report 1
A304	AHU-3 SPACE RELATIVE HUMIDITY	AI	20%/80%	AHU3	5 min	Report 1
A305	AHU-3 SUPPLY AIR DUCT TEMPERATURE	AI	40/100	AHU3	5 min	Report 1
A306	AHU-3 SUPPLY FAN STATUS	BI	Fail	AHU3	5 min	
A307	AHU-3 SUPPLY FAN START/STOP	BO		AHU3	COV	
A308	AHU-3 SUPPLY FAN SPEED	AO		AHU3	COV	
A309	AHU-3 LOW TEMPERATURE ALARM	BI	Yes	AHU3	COV	Report 1
A310	AHU-3 HW COIL VALVE	AO		AHU3	COV	
A311	AHU-3 MIXED AIR TEMPERATURE	AI	35/100	AHU3	5 min	
A312	AHU-3 CHW COIL VALVE	AO		AHU3	COV	
A313	AHU-3 MAIN FILTER DIFFERENTIAL PRESSURE	AI	1.0	AHU3	5 min	Report 1
A314	AHU-3 PRE FILTER DIFFERENTIAL PRESSURE	AI	0.6	AHU3	5 min	Report 1
A315	AHU-3 OUTSIDE AIR DAMPER	AO		AHU3	5 min	
A316	AHU-3 OUTSIDE AIR DAMPER END SWITCH	BI		AHU3		
A317	AHU-3 OUTSIDE AIR TEMPERATURE	AI		AHU3	5 min	Report 1
A318	AHU-3 OA DAMPER MIN POS. SETPOINT VOT	AV		AHU3		
A319	AHU-3 HIGHEST VAV DEMAND	AV		AHU3		
A320	AHU-3 SUPPLY AIR T MIN	AV		AHU3		
A321	AHU-3 SUPPLY AIR T MAX	AV		AHU3		
A322	AHU-3 UNOCCUPIED HEATING SPACE T SETPOINT	AV		AHU3		Setback
A323	AHU-3 OCCUPIED HEATING SPACE T SETPOINT	AV		AHU3		Warm Up
A324	AHU-3 COOLING SPACE H SETPOINT	AV		AHU3		
A325	AHU-3 OUTISED AIR LOW T PROTECTION SET POINT	AV		AHU3		Freeze Protect
A326	AHU-3 MIXED AIR LOW T PROTECTION SET POINT	AV		AHU3		Freeze Protect

NOTES:
1. LOCKOUT ALARM WHEN UNIT IS DE-ENERGIZED. PROVIDE 15 MINUTE START UP DELAY BEFORE ENABLING ALARM.
2. NOT ALL VIRTUAL POINTS ARE SHOWN. PROVIDE ALL POINTS REQUIRED FOR SOFTWARE OPERATION

EXISTING AHU-3 CONTROL MODE SUMMARY

DEVICE	OCCUPIED	UNOCCUPIED	OFF	SAFETIES
S FAN	MODULATE TO CONTROL DUCT STATIC PRESSURE	MODULATE TO CONTROL DUCT STATIC PRESSURE	OFF	OFF
OA DAMPER	MODULATE TO CONTROL OPEN WORK AREA TO OUTSIDE DIFFERENTIAL PRESSURE	MODULATE TO CONTROL OPEN WORK AREA TO OUTSIDE DIFFERENTIAL PRESSURE	CLOSED	CLOSED
RA DAMPER	INVERSELY TRACKS OA DAMPER	INVERSELY TRACKS OA DAMPER	OPEN	OPEN
HEATING COIL	MODULATE TO CONTROL SUPPLY AIR TEMPERATURE	MODULATE TO CONTROL SUPPLY AIR TEMPERATURE	OPEN IF OAT < 35, OTHERWISE CLOSED	OPEN ON LOW TEMPERATURE ALARM
COOLING COIL	MODULATE TO CONTROL CORRIDOR RELATIVE HUMIDITY	MODULATE TO CONTROL CORRIDOR RELATIVE HUMIDITY	OPEN IF OAT < 35, OTHERWISE CLOSED	OPEN ON LOW TEMPERATURE ALARM

1 M-706 EXISTING AHU-3 CONTROLS
SCALE: NTS

GENERAL NOTES

1. ALL EXISTING CONTROL POINTS MUST BE MET AND TESTED ONCE CONNECTION FROM EXISTING EQUIPMENT AND CONTROL COMPONENTS HAS BEEN MADE TO THE CONTRACTOR PROVIDED CONTROL SYSTEM.

DDC CONTROL SYSTEM

THE AIR HANDLING UNIT HAS A DDC CONTROLLER THAT MANAGES THE CONTROL AND MONITORING FUNCTIONS OF THE LABORATORY AHU AND ITS SUPPLY AIR AND ASSOCIATED EXHAUST SYSTEMS.

SEQUENCE OF OPERATION

THE AHU AND EXHAUST FAN SET RUN CONTINUOUSLY. IF THE EXHAUST FANS STATUS IS ALL FAILED, THE AHU SUPPLY FAN SHALL STOP. IF THE AHU FAN STATUS IS FAILED, THE EXHAUST FANS SHALL STOP.

LABORATORY EXHAUST FANS

THE LABORATORY EXHAUST FANS ARE ARRANGED FOR THE OUTER TWO TO RUN NORMALLY AND THE CENTER FAN TO START IF ONE OF THE OUTER TWO FANS FAILS. ON COMMAND TO START, THE EXHAUST FAN ISOLATION DAMPER WILL OPEN, WHEN OPEN STATUS IS CONFIRMED BY THE DAMPER SHAFT LIMIT SWITCH, THE FAN MOTOR SHALL START VIA A 30 SECOND (ADJ) RAMP UP ON THE VFD.

THE OPERATING FAN SPEED IS PRESET DEPENDING ON THE SITE WIND SPEED AS DETERMINED BY AN ANEMOMETER. IF THE WIND SPEED IS ABOVE 10 MILES PER HOUR, THE FANS RUN AT HIGH SPEED. IF IT IS BELOW 10 MILES PER HOUR THE FANS RUN AT LOW SPEED. THIS REDUCES THE FAN OPERATING COST DURING THE MAJORITY OF OPERATION WHEN HIGH FAN DISCHARGE VELOCITY IS NOT REQUIRED TO ACHIEVE THE REQUIRED EXHAUST PLUME HEIGHT.

WHEN THE FANS ARE OPERATING, THE EXHAUST PLENUM OUTSIDE AIR BYPASS DAMPERS MODULATE TO CONTROL EXHAUST PLENUM STATIC PRESSURE. THIS BYPASS WILL MAKE UP THE ADDITIONAL AIR REQUIRED FOR THE PLUME DISPERTION.

FAILURE OF THE FAN MOTORS, AS DETECTED BY THE VARIABLE SPEED CONTROLLER WILL BE REGISTERED ON THE DDC SYSTEM AND BE TRANSMITTED AS AN ALARM.

AHU SUPPLY AIR FAN

ON COMMAND TO START, THE OUTSIDE AIR ISOLATION DAMPER (A314) WILL OPEN. WHEN OPEN STATUS IS CONFIRMED BY THE DAMPER SHAFT LIMIT SWITCH (A315), THE FAN MOTOR SHALL START VIA A 30 SECOND (ADJ) RAMP UP ON THE VFD.

THE OPERATING FAN SPEED IS CONTROLLED TO GIVE A CONSTANT STATIC PRESSURE AT THE PRESSURE TRANSMITTER (A302) LOCATED IN THE SUPPLY AIR DUCTWORK. HARDWIRED INTERLOCKS FROM THE SUPPLY AIR SMOKE DETECTOR AND FREEZESTAT SHUT DOWN THE FAN IF TRIPPED.

COOLING COIL

THE COOLING COIL CHILLED WATER CONTROL VALVE (A311) IS MODULATED TO MAINTAIN THE AVERAGE ROOM RELATIVE HUMIDITY AS MEASURED AT THE TWO REFERENCE ROOM HUMIDITY SENSORS (A303) AT SETPOINT.

HEATING COIL

THE AHU HEATING COIL HEATING WATER CONTROL VALVE (A304) IS MODULATED TO MAINTAIN THE AHU SUPPLY AIR TEMPERATURE (A304) AT SETPOINT.

FILTER DIFFERENTIAL PRESSURE SWITCHES

EACH FILTER BANK HAS A DIFFERENTIAL PRESSURE GAUGE AND SWITCH. THE SWITCHES ARE SET TO TRANSMIT A FILTER DIRTY ALARM TO THE DDC SYSTEM.

STATE OF LOUISIANA
DAVID R. LOMBAS
05/20/26
PROFESSIONAL ENGINEER

NO.	DATE	BY	DESCRIPTION

REVISIONS

Johnson M'Adams PSC
ARCHITECTS/ENGINEERS PLANNING SURVEYING
P.O. BOX 513, GREENWOOD, MISSISSIPPI - (662) 455-6443

USDA Agricultural Research Service

USDA AGRICULTURAL RESEARCH SERVICE
SUGARCANE RESEARCH LABORATORY
HOUMA, LOUISIANA

EXISTING AHU-3 CONTROLS

A-E FIRM	USDA
PROJECT MANAGER	EPM
REH	WN
DESIGNER	PPM
SME	XXX
CHECKED BY	SAFETY & HEALTH
DRL	CM
JOB #	REAL PROPERTY
5825	JS

PROJECT NO. XXX
DATE 05/20/2026

AGRICULTURAL RESEARCH SERVICE
FACILITIES ENGINEERING BRANCH
5106 SUNNYSIDE AVENUE
BELTSVILLE, MD 20705-5100

SHEET M-706
142 OF 176

J:\greenwood\2025 Jobs\5825 USDA Sugarcane Research Lab Houma LA\07 Working Folder\Mech\M-706.dwg
May 19, 2026 - 7:39pm

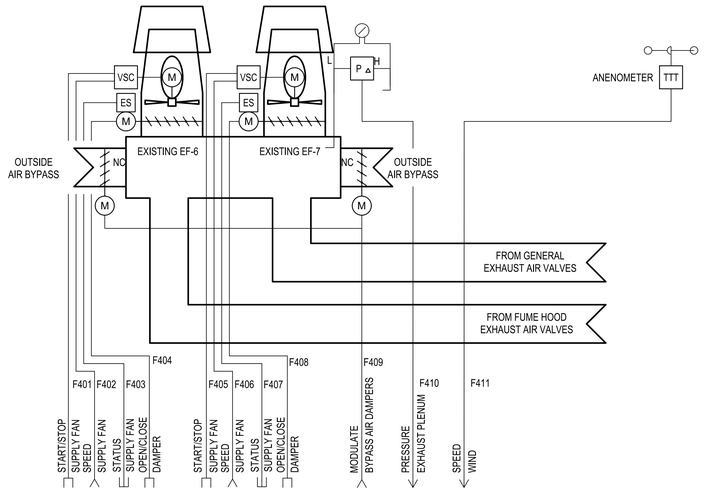

DDC CONTROL SYSTEM

THE AIR HANDLING UNIT HAS A DDC CONTROLLER THAT MANAGES THE CONTROL AND MONITORING FUNCTIONS OF THE LABORATORY AHU AND ITS SUPPLY AIR AND ASSOCIATED EXHAUST SYSTEMS.

SEQUENCE OF OPERATION

THE AHU AND EXHAUST FAN SET RUN CONTINUOUSLY. IF THE EXHAUST FANS STATUS IS ALL FAILED, THE AHU SUPPLY FAN SHALL STOP. IF THE AHU FAN STATUS IS FAILED, THE EXHAUST FANS SHALL STOP.

LABORATORY EXHAUST FANS

THE LABORATORY EXHAUST FANS ARE ARRANGED FOR THE OUTER TWO TO RUN NORMALLY AND THE CENTER FAN TO START IF ONE OF THE OUTER TWO FANS FAILS. ON COMMAND TO START, THE EXHAUST FAN ISOLATION DAMPER WILL OPEN. WHEN OPEN STATUS IS CONFIRMED BY THE DAMPER SHAFT LIMIT SWITCH, THE FAN MOTOR SHALL START VIA A 30 SECOND (ADJ) RAMP UP ON THE VFD.

THE OPERATING FAN SPEED IS PRESET DEPENDING ON THE SITE WIND SPEED AS DETERMINED BY AN ANEMOMETER. IF THE WIND SPEED IS ABOVE 10 MILES PER HOUR, THE FANS RUN AT HIGH SPEED, IF IT IS BELOW 10 MILES PER HOUR THE FANS RUN AT LOW SPEED. THIS REDUCES THE FAN OPERATING COST DURING THE MAJORITY OF OPERATION WHEN HIGH FAN DISCHARGE VELOCITY IS NOT REQUIRED TO ACHIEVE THE REQUIRED EXHAUST PLUME HEIGHT.

WHEN THE FANS ARE OPERATING, THE EXHAUST PLENUM OUTSIDE AIR BYPASS DAMPERS MODULATE TO CONTROL EXHAUST PLENUM STATIC PRESSURE. THIS BYPASS WILL MAKE UP THE ADDITIONAL AIR REQUIRED FOR THE PLUME DISPERTION.

FAILURE OF THE FAN MOTORS, AS DETECTED BY THE VARIABLE SPEED CONTROLLER WILL BE REGISTERED ON THE DDC SYSTEM AND BE TRANSMITTED AS AN ALARM.

GENERAL NOTES

1. ALL EXISTING CONTROL POINTS MUST BE MET AND TESTED ONCE CONNECTION FROM EXISTING EQUIPMENT AND CONTROL COMPONENTS HAS BEEN MADE TO THE CONTRACTOR PROVIDED CONTROL SYSTEM.

EXISTING EF-6/7 CONTROL SYSTEM OBJECT LIST

TAG	OBJECT NAME	TYPE	ALARM	GRAPHIC	TREND	NOTES
F401	EF-6 EXHAUST FAN STATUS	BI	Fail	EF6	5 min	
F402	EF-6 EXHUAST FAN START/STOP	BO		EF6	COV	
F403	EF-6 EXHAUST FAN SPEED	AO		EF6	COV	
F402	EF-6 BACKDRAFT DAMPER OPEN/CLOSE	BO		EF6	COV	
F404	EF-7 EXHAUST FAN STATUS	BI	Fail	EF6	5 min	
F405	EF-7 EXHUST FAN START/STOP	BO		EF6	COV	
F406	EF-7 EXHAUST FAN SPEED	AO		EF6	COV	
F402	EF-7 BACKDRAFT DAMPER OPEN/CLOSE	BO		EF6	COV	
F414	EF-6/7 BYPASS AIR DAMPER	AO		EF6	5 min	
F409	EF-6/7 EXHAUST PLENUM PRESSURE	AI	1.0/4.0	EF6	5 min	Report 1
F410	EF-6/7 WIND SPEED	AI		EF6	5 min	Report 1
F411	EF-6/7 EXHAUST PLENUM PRESSURE MIN	AV		EF6		
F412	EF-6/7 EXHAUST PLENUM PRESSURE MAX	AV		EF6		

NOTES:
1. LOCKOUT ALARM WHEN UNIT IS DE-ENERGIZED. PROVIDE 15 MINUTE START UP DELAY BEFORE ENABLING ALARM.
2. NOT ALL VIRTUAL POINTS ARE SHOWN. PROVIDE ALL POINTS REQUIRED FOR SOFTWARE OPERATION

EXISTING EF-6/7 CONTROL MODE SUMMARY

DEVICE	OCCUPIED	UNOCCUPIED	OFF
LEAD FAN	RUN AT PRESET SPEED DEPENDING ON WIND SPEED	RUN AT PRESET SPEED DEPENDING ON WIND SPEED	OFF
BACKDRAFT DAMPER	OPEN WHEN FAN IS RUNNING	OPEN WHEN FAN IS RUNNING	CLOSED
LAG FAN	RUN AT PRESET SPEED DEPENDING ON WIND SPEED WHEN LEAD FAN IS FAILED	RUN AT PRESET SPEED DEPENDING ON WIND SPEED WHEN LEAD FAN IS FAILED	OFF
BACKDRAFT DAMPER	OPEN WHEN FAN IS RUNNING	OPEN WHEN FAN IS RUNNING	CLOSED
OA BYPASS DAMPER	MODULATE TO CONTROL EXHAUST PLENUM PRESSURE	MODULATE TO CONTROL EXHAUST PLENUM PRESSURE	CLOSED

1 / M-707 EXISTING EF-6/7 CONTROLS

SCALE: NTS

STATE OF LOUISIANA — JAMES M. SMILEY — 05/20/26 — PROFESSIONAL ENGINEER

NO.	DATE	BY	DESCRIPTION

REVISIONS

Johnson Mirmiran Adams PA — PROJECTS/RESEARCH PLANNING FEASIBILITY ENVIRONMENT — P.O. BOX 313, GREENWOOD, MISSISSIPPI - (662) 455-4943

USDA Agricultural Research Service

USDA AGRICULTURAL RESEARCH SERVICE
SUGARCANE RESEARCH LABORATORY
HOUMA, LOUISIANA

EXISTING HEADHOUSE EXHAUST FAN CONTROLS

A-E FIRM	USDA
PROJECT MANAGER	REH
EPM	WN
DESIGNER	SME
PPM	XXX
CHECKED BY	DRL
SAFETY & HEALTH	CM
JOB #	5825
REAL PROPERTY	JS
PROJECT NO.	XXX
DATE	05/20/2026

AGRICULTURAL RESEARCH SERVICE
FACILITIES ENGINEERING BRANCH
5106 SUNNYSIDE AVENUE
BELTSVILLE, MD 20705-5100

SHEET M-707
143 OF 176

J:\greenwood\2025 Jobs\5825 USDA Sugarcane Research Lab Houma LA\07 Working Folder\Mech\M-707.dwg
May 19, 2026 - 2:29pm

CONTROLS GENERAL NOTES:

1. THE CONTROL DIAGRAMS AND SCHEMATICS ILLUSTRATE THE FUNCTIONAL REQUIREMENTS AND CONTROL RELATIONSHIPS. ALL ACCESSORIES, APPURTENANCES, AND DEVICES MAY NOT BE SHOWN IN DETAIL.
2. THE SPECIFICATIONS MUST BE CONSULTED FOR DETAILED REQUIREMENTS.
3. BUILDING CONTROL SYSTEM MUST BE COMPLETELY OPERATIONAL BEFORE BUILDING COMMISSIONING CAN TAKE PLACE.
4. CONTRACTOR IS RESPONSIBLE FOR DOMESTIC HOT WATER CONTROLS.
5. SOFTWARE COMMUNICATION IS REQUIRED BETWEEN THE DDC SYSTEM AND EQUIPMENT MANUFACTURER'S PACKAGED CONTROL SYSTEMS WHERE INDICATED.

"POINTS LIST SCHEDULE" GENERAL NOTES:

1. CELLS WITH "<___>" MUST BE DETERMINED BY THE CONTRACTOR
2. SPACES WHERE NO ENTRY IS REQUIRED CONTAIN " ~ "
3. AN ALARM PRIORITY OF CRITICAL (CRIT) INDICATES THAT THE ALARM MUST REMAIN IN ALARM UNTIL ACKNOWLEDGED BY A SYSTEM OPERATOR AND UNTIL THE ALARM CONDITION NO LONGER EXISTS.
4. AN ALARM PRIORITY OF INFORMATIONAL (INFO) INDICATES THAT THE ALARM MUST REMAIN IN ALARM UNTIL THE ALARM CONDITION NO LONGER EXISTS OR THE ALARM IS ACKNOWLEDGED.

KEYED NOTES

1. AIRFLOW MEASUREMENT AND VIBRATION SENSORS BY FAN MANUFACTURER.

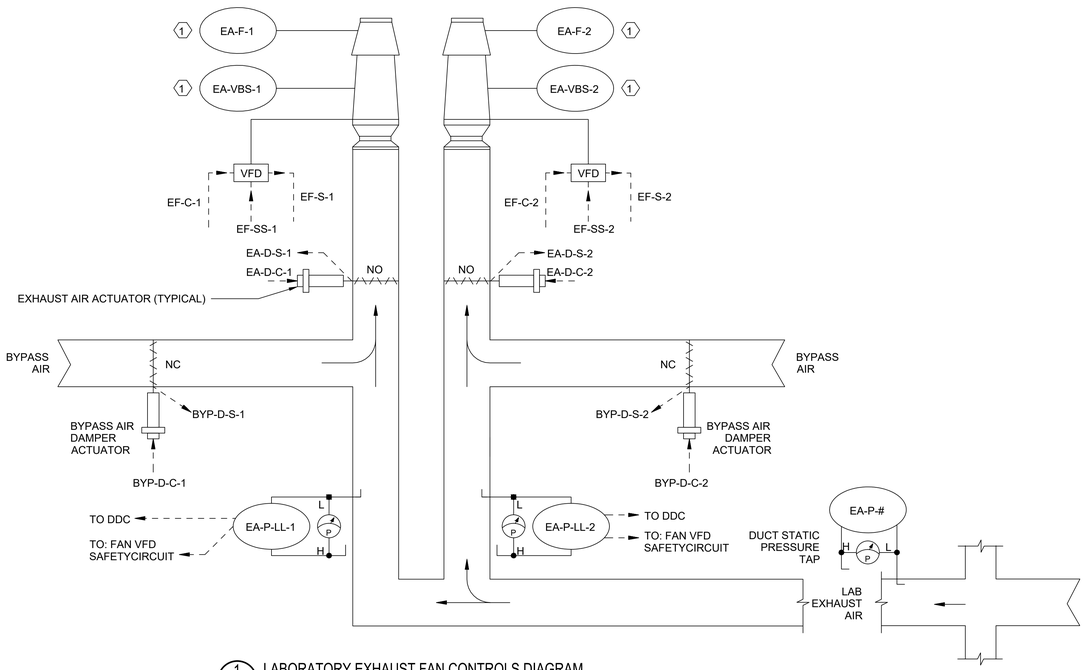

1 M-708 LABORATORY EXHAUST FAN CONTROLS DIAGRAM

SCALE: NTS

FUNCTION	NAME	DESCRIPTION	SETTING (WITH UNITS)	RANGE (WITH UNITS)	IO TYPE	LDP AND M&C DISPLAY			OVERRIDES		ALARMS	
						LDP VIEW REQ'D	M&C DISP REQ'D	M&C TREND REQ'D	LDP OVRD REQ'D	M&C OVRD REQ'D	ALARM CONDITION (SEE NOTES)	ALARM PRIORITY
PROOFS & SAFETIES	EF-S-#	EXHAUST FAN STATUS (POINT PER FAN)	~	ON/OFF	BI	X	X	X	~	~	EXHAUST FAN PROOF FAILED	INFO
	EA-D-S-#	EXHAUST AIR DAMPER POSITION STATUS (POINT PER DAMPER)	~	OPEN/CLOSED	BI	X	X	X	~	~	DAMPER STATUS OPPOSITE OF DAMPER COMMAND	INFO
	EA-VBS-#	EXHAUST FAN VIBRATION SENSOR (POINT PER FAN)	~	~	BI	~	X	X	~	~	VIBRATION SENSOR LIMIT EXCEEDED	INFO
	BYP-D-S=#	BYPASS AIR DAMPER POSITION STATUS (POINT PER DAMPER)	~	0-100%	AI	X	X	X	~	~	DAMPER STATUS DOES NOT MATCH DAMPER COMMAND	INFO
	EA-P-LL-#	EXHAUST AIR PRESSURE LOW LIMIT (POINT PER FAN)	~	ALM/NORMAL	AI	X	X	X	~	~	ALM	CRIT
START / STOP	SYS-OCC	OCCUPANCY INPUT (FROM DDC)	~	<___>	OBJ	X	X	~	~	~	~	~
	BYP-D-C-#	BYPASS AIR DAMPER COMMAND (POINT PER DAMPER)	~	0-100%	AO	X	X	X	X	X	~	~
	EF-SS-#	EXHAUST FAN START/STOP (POINT PER FAN)	~	ON/OFF	BO	X	X	X	X	X	~	~
	EA-D-C-#	EXHAUST AIR DAMPER COMMAND (POINT PER DAMPER)	~	OPEN/CLOSED	BO	X	X	X	X	~	~	~
EXHAUST AIR CONTROL	EA-F-#	EXHAUST AIR FLOW RATE (POINT PER FAN)	~	<___> CFM	AI	X	X	X	~	~	~	~
	EF-C-#	EXHAUST FAN COMMAND (POINT PER FAN)	~	0-100%	AO	~	X	X	~	X	~	~
	EA-P-#	EXHAUST AIR PRESSURE (POINT PER SENSOR)	~	<___>	AI	X	X	X	~	~	*EA-P MORE THAN 20% ABOVE OR BELOW EA-P-SP	
	EAP-P-SP	EXHAUST AIR PRESSURE SETPOINT	NOTE 3	~	~	X	X	~	~	X	~	~
	EA-V-SP	EXHAUST AIR OUTLET AIRFLOW MINIMUM SETPOINT	SEE SCHEDULE	~	~	X	X	~	X	X	~	~

NOTES:
1)UNIT MANUFACTURERS PROOFS AND SAFETIES: THE CONTRACTOR MUST SHOW EACH PROOF AND SAFETY AS A SEPARATE ROW.
2)ALARM CONDITIONS MARKED WITH AN ASTERISK (*) MUST BE ACTIVE ONLY WHEN THE SYSTEM IS IN ON MODE AND HAS BEEN IN ON MODE FOR MORE THAN: * = 5 MINUTES ** = 30 MINUTES
3)SEE SEQUENCE OF OPERATION FOR SETPOINT. CONTRACTOR TO VERIFY AND ADJUST DURING TAB.

SEQUENCE OF OPERATION: LABORATORY EXHAUST

THIS SEQUENCE APPLIES TO LEF-1A & 1B.

INTERLOCK WITH AHU-2. WHEN THE LEAD LABORATORY EXHAUST FAN IS COMMANDED ON THE LEAD EXHAUST DAMPER AND LEAD BYPASS DAMPER MUST OPEN BEFORE ENERGIZING THE FAN. AFTER LEAD THE LABORATORY EXHAUST FAN IS COMMANDED OFF AND THE FAN IS DE-ENERGIZED THE LEAD EXHAUST DAMPER AND LEAD BYPASS DAMPER MUST CLOSE.

GENERAL:
THE HVAC SYSTEM MUST HAVE THE FOLLOWING MODES OF OPERATION: OFF AND ON.

THE SYSTEM CONSISTS OF A LABORATORY EXHAUST FAN ASSEMBLY WITH TWO FANS CONTROLLED BY VARIABLE FREQUENCY DRIVES. THE LABORATORY EXHAUST ASSEMBLY HAS N+1 REDUNDANCY (LEAD/STANDBY) WITH FANS AND MOTORS.

THE FANS ARE CONNECTED TO A PLENUM WITH ISOLATION DAMPERS INSTALLED ON THE INLET OF THE FAN. THERE IS A BYPASS DAMPER INSTALLED FOR EACH FAN CONTROLLED BY A MOTORIZED ACTUATOR. THE FAN AND THE BYPASS DAMPER ARE CONTROLLED TO MAINTAIN THE SYSTEM EXHAUST VELOCITY AND EXHAUST STATIC PRESSURE TO THE RESPECTIVE SETPOINTS.

OFF:
EACH FAN MUST BE DE-ENERGIZED AND ALL EXHAUST AND BYPASS AIR DAMPERS MUST BE CLOSED.

INTERLOCKED AHU-2 MUST BE OFF.

ON:
INTERLOCKED AHU-2 MUST BE ON.

FAN CONTROL: THE LEAD EXHAUST FAN VFD MUST MODULATE TO SATISFY THE DUCT STATIC PRESSURE SENSOR(S) SETPOINT. WHEN ANY SENSOR READS LESS NEGATIVE PRESSURE THAN SETPOINT, LEAD EXHAUST FAN VFD MUST INCREASE SPEED UNTIL ALL SENSORS ARE SATISFIED. WHEN ALL SENSORS READ MORE NEGATIVE PRESSURE THAN SETPOINT, LEAD EXHAUST FAN VFD MUST DECREASE SPEED UNTIL ALL SENSORS ARE SATISFIED.

THE DDC MUST ENERGIZE THE LEAD FAN VFD AND CONTROL FAN SPEED. THE DDC SYSTEM MUST COMMAND THE LEAD FAN ISOLATION DAMPER OPEN AND RAMP THE LEAD FAN FROM A MINIMUM SPEED UP TO THE MAXIMUM SPEED. VFD MINIMUM SPEED MUST BE DETERMINED BY THE TAB CONTRACTOR TO MAINTAIN THE SCHEDULED MAXIMUM SCHEDULED AIRFLOW. THE EXHAUST SYSTEM WILL BE CONTROLLED TO MAINTAIN A DUCT STATIC PRESSURE AS SENSED BY A STATIC PRESSURE TRANSMITTERS AS INDICATED. THE DDC MUST MODULATE THE LEAD FAN VFD TO MAINTAIN THE SYSTEM STATIC PRESSURE TO THE SYSTEM STATIC PRESSURE SETPOINT (TBD BY TAB CONTRACTOR). IF THE SYSTEM PRESSURE CANNOT BE MAINTAINED, THE DDC MUST ALARM.

EACH FAN HAS A FACTORY-INSTALLED ISOLATION DAMPER THAT IS HARDWIRED TO THE FAN'S VFD. DAMPER POSITION IS MONITORED FOR BOTH OPEN AND CLOSED POSITION THROUGH THE DDC. AN ALARM CONDITION WILL BE INITIATED IF AT ANY POINT THE DAMPER POSITION DOES NOT MATCH THE START COMMAND OF THE FAN. IF THE FAN IS CALLED TO BE ON AND THE DAMPER INDICATES CLOSED, THE FAN WILL BE DISABLED AND THE DDC SYSTEM MUST ALARM.

UPON POWER FAILURE, THE FAN MUST STOP. WHEN POWER IS RESTORED THE EXHAUST SYSTEM FAN MUST START AUTOMATICALLY AND ATTEMPT TO MAINTAIN STATIC PRESSURE AT SET POINT.

EXHAUST FAN DESIGNATIONS (LEAD/STANDBY) MUST BE ROTATED EITHER MANUALLY THROUGH A SOFTWARE SWITCH OR AUTOMATICALLY AS LEAD FAN RUNTIME EXCEEDS 100 HOURS (ADJ.).

BYPASS CONTROL:THE BYPASS DAMPER ASSOCIATED WITH THE LEAD FAN MUST MODULATE OPEN WHEN THE FAN AIRFLOW REACHES THE MINIMUM SCHEDULED AIRFLOW AND THE SYSTEM STATIC PRESSURE IS MORE NEGATIVE THAN THE SYSTEM STATIC PRESSURE SETPOINT.

THE LEAD FAN BYPASS DAMPER MUST MODULATE CLOSED WHEN THE FAN AIRFLOW IS GREATER THAN THE MINIMUM SCHEDULED AIRFLOW AND THE SYSTEM STATIC PRESSURE IS LESS NEGATIVE THAN THE SYSTEM STATIC PRESSURE SET POINT.

SAFETY CONTROLS:
BUILDING FIRE ALARM CONDITION: IF BUILDING IS IN FIRE ALARM CONDITION, THE FIRE ALARM CONTROL PANEL MUST DISABLE FANS AND SEND AN ALARM TO THE DDC SYSTEM AND UNIT MUST GO INTO OFF MODE.

EXHAUST AIR LOW STATIC PRESSURE: WHEN THE EXHAUST AIR STATIC PRESSURE EXCESSIVE NEGATIVE PRESSURE ABOVE SETPOINT, THE LOW-LIMIT STATIC-PRESSURE SWITCH IN THE FAN PRESSURE ALARM TO THE DDC SYSTEM.

VIBRATION SENSOR: THE LABORATORY EXHAUST FAN UNIT MUST BE PROVIDED WITH MANUFACTURER'S VIBRATION SENSOR, SET TO MANUFACTURER'S RECOMMENDED FAULT VALUES. IF A FAULT IS DETECTED, AN ALARM MUST BE GENERATED.

FAN FAILURE: UPON FAILURE OF THE LEAD FAN, AS SENSED THROUGH EITHER THE LOSS OF LOAD CURRENT BY THE LEAD FAN VFD OR EXCESS VIBRATION AS SENSED BY THE LEAD FAN VIBRATION SWITCH, AN ALARM MUST BE INITIATED AND THE LEAD FAN MUST BE LOCKED OUT. THE FAN VIBRATION SWITCH MUST BE MANUALLY RESET PRIOR TO FAN RE-ENABLEMENT. THE STANDBY FAN MUST BECOME THE LEAD FAN AND OPERATE AS DESCRIBED UNDER FAN CONTROL.

SETPOINTS:
DUCT STATIC PRESSURE SETPOINT = TBD BY TAB CONTRACTOR

NO.	DATE	BY	DESCRIPTION
			REVISIONS

Johnson, Mirmiran & Adams, PSW P.A. ARCHITECTS/ENGINEERS/CEO PLANNING SURVEYING MANAGEMENT P.O. BOX 513, GREENWOOD, MISSISSIPPI • (662) 455-6422

A-E FIRM	USDA
PROJECT MANAGER: REH	EPM: WN
DESIGNER: SME	PPM: XXX
CHECKED BY: DRL	SAFETY & HEALTH: CM
JOB #: 5825	REAL PROPERTY: JS

STATE OF LOUISIANA — DARREL M. ENGLE — LICENSE NO. 34787 — 05/20/26 — PROFESSIONAL ENGINEER

USDA Agricultural Research Service

USDA AGRICULTURAL RESEARCH SERVICE
SUGARCANE RESEARCH LABORATORY
HOUMA, LOUISIANA

HAVC CONTROLS

PROJECT NO. XXX	AGRICULTURAL RESEARCH SERVICE FACILITIES ENGINEERING BRANCH 5106 SUNNYSIDE AVENUE BELTSVILLE, MD 20705-5100	SHEET M-708
DATE 05/20/2026		144 OF 176

J:\greenwood\2025 Jobs\5825 USDA Sugarcane Research Lab Houma LA\07 Working Folder\Mech\M-708.dwg
May 19, 2026 - 2:39pm

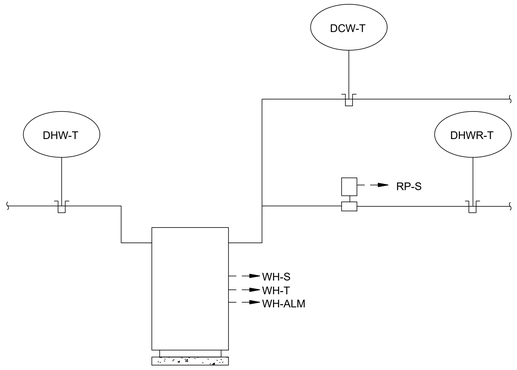

SEQUENCE OF OPERATIONS:
TYPICAL OF WH-1, 2, 3, AND 4:

GENERAL:
THE UNIT MUST BE CONTROLLED BY WATER HEATER MANUFACTURER CONTROLS.

OFF:
OFF MODE MUST BE DETERMINED BY REMOTE SIGNAL FROM THE DDC SYSTEM OR USER INPUT AT THE UNIT.

AUTO:
AUTO MODE MUST BE DETERMINED BY REMOTE SIGNAL FROM THE DDC SYSTEM OR USER INPUT AT THE UNIT.
MANUFACTURER CONTROLLER MUST CONTROL UNIT TO MAINTAIN INTERNAL TANK TEMPERATURE AT THE LOCAL USER ADJUSTED TEMPERATURE SETPOINT.

SAFETY CONTROLS:
THE UNIT MUST RUN SUBJECT TO INTERNAL SAFETIES

POINTS LIST SCHEDULE - WATER HEATER

						LDP AND M&C DISPLAY			OVERRIDES		ALARMS	
						LDP	M&C		LDP	M&C		
FUNCTION	NAME	DESCRIPTION	SETTING (WITH UNITS)	RANGE (WITH UNITS)	IO TYPE	VIEW REQ'D	DISP REQ'D	TREND REQ'D	OVRD REQ'D	OVRD REQ'D	ALARM CONDITION (SEE NOTES)	ALARM PRIORITY
PROOFS & SAFETIES	WH-S	WATER HEATER STATUS	~	ON/OFF	BI	X	X	~	~	~	~	~
	RP-S	RECIRCULATION PUMP STATUS	~	ON/OFF	BI	X	X	~	~	~	~	~
	WH-ALM	WATER HEATER GENERAL ALARM	~	ALM/NORMAL	BI	X	X	~	~	~	GENERAL ALARM FROM WATER HEATER INTERNAL CONTROLS	INFO
ZONE TEMPERATURE CONTROL	WH-T	WATER HEATER TANK TEMPERATURE	~	<___> °F	AI	~	X	X	~	~	~	~
	DHWR-T	DOMESTIC HOT WATER RETURN TEMPERATURE	~	<___> °F	AI	~	X	X	~	~	~	~
	DHW-T	DOMESTIC HOT WATER TEMPERATURE	~	<___> °F	AI	~	X	X	~	~	~	~
	DCW-T	DOMESTIC COLD WATER TEMPERATURE	~	<___> °F	AI	~	X	X	~	~	~	~

NOTES:
1)UNIT MANUFACTURERS PROOFS AND SAFETIES: THE CONTRACTOR MUST SHOW EACH PROOF AND SAFETY AS A SEPARATE ROW.
2)SYS-ON: OVERRIDE OF SYS-ON IS ACCOMPLISHED THROUGH THE SYSTEM SCHEDULER.
3)ALARM CONDITIONS MARKED WITH AN ASTERISK (*) MUST BE ACTIVE ONLY WHEN THE SYSTEM IS IN OCCUPIED MODE AND HAS BEEN IN OCCUPIED MODE FOR MORE THAN: * = 5 MINUTES ** = 30 MINUTES

CONTROLS GENERAL NOTES:

1. THE CONTROL DIAGRAMS AND SCHEMATICS ILLUSTRATE THE FUNCTIONAL REQUIREMENTS AND CONTROL RELATIONSHIPS. ALL ACCESSORIES, APPURTENANCES, AND DEVICES MAY NOT BE SHOWN IN DETAIL.
2. THE SPECIFICATIONS MUST BE CONSULTED FOR DETAILED REQUIREMENTS.
3. BUILDING CONTROL SYSTEM MUST BE COMPLETELY OPERATIONAL BEFORE BUILDING COMMISSIONING CAN TAKE PLACE.
4. CONTRACTOR IS RESPONSIBLE FOR DOMESTIC HOT WATER CONTROLS.
5. SOFTWARE COMMUNICATION IS REQUIRED BETWEEN THE DDC SYSTEM AND EQUIPMENT MANUFACTURER'S PACKAGED CONTROL SYSTEMS WHERE INDICATED.

"POINTS LIST SCHEDULE" GENERAL NOTES:

1. CELLS WITH "<___>" MUST BE DETERMINED BY THE CONTRACTOR
2. SPACES WHERE NO ENTRY IS REQUIRED CONTAIN " ~ "
3. AN ALARM PRIORITY OF CRITICAL (CRIT) INDICATES THAT THE ALARM MUST REMAIN IN ALARM UNTIL ACKNOWLEDGED BY A SYSTEM OPERATOR AND UNTIL THE ALARM CONDITION NO LONGER EXISTS.
4. AN ALARM PRIORITY OF INFORMATIONAL (INFO) INDICATES THAT THE ALARM MUST REMAIN IN ALARM UNTIL THE ALARM CONDITION NO LONGER EXISTS OR THE ALARM IS ACKNOWLEDGED.

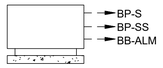

SEQUENCE OF OPERATIONS:
TYPICAL OF BOOSTER PUMP DWBP-1

GENERAL: *THE UNIT MUST BE CONTROLLED BY MANUFACTURER CONTROLS. THE BOOSTER PUMP MUST BE INTERLOCKED WITH THE DEMAND REQUIREMENTS OF THE EXISTING REVERSE OSMOSIS SYSTEM AND MUST VARY FLOW AND PRESSURE ACCORDINGLY.*

OFF: *OFF MODE MUST BE DETERMINED BY REMOTE SIGNAL FROM THE DDC SYSTEM OR USER INPUT AT THE UNIT.*

AUTO: *AUTO MODE MUST BE DETERMINED BY REMOTE SIGNAL FROM THE DDC SYSTEM OR USER INPUT AT THE UNIT.*

SAFETY CONTROLS: *THE UNIT MUST RUN SUBJECT TO INTERNAL SAFETIES.*

POINTS LIST SCHEDULE - BOOSTER PUMP

						LDP AND M&C DISPLAY			OVERRIDES		ALARMS	
						LDP	M&C		LDP	M&C		
FUNCTION	NAME	DESCRIPTION	SETTING (WITH UNITS)	RANGE (WITH UNITS)	IO TYPE	VIEW REQ'D	DISP REQ'D	TREND REQ'D	OVRD REQ'D	OVRD REQ'D	ALARM CONDITION (SEE NOTES)	ALARM PRIORITY
PROOFS	BP-S-#	BOOSTER PUMP STATUS	~	ON/OFF	BI	X	X	~	~	~	~	~
	BP-SS-#	BOOSTER PUMP ENABLE	~	ON/OFF	BI	X	X	~	~	~	~	~
	BP-ALM-#	BOOSTER PUMP GENERAL ALARM	~	ALM/NORMAL	BI	X	X	~	~	~	GENERAL ALARM FROM BOOSTER PUMP INTERNAL CONTROLS	INFO

NOTES:
1)UNIT MANUFACTURERS PROOFS AND SAFETIES: THE CONTRACTOR MUST SHOW EACH PROOF AND SAFETY AS A SEPARATE ROW.
2)SYS-ON: OVERRIDE OF SYS-ON IS ACCOMPLISHED THROUGH THE SYSTEM SCHEDULER.
3)ALARM CONDITIONS MARKED WITH AN ASTERISK (*) MUST BE ACTIVE ONLY WHEN THE SYSTEM IS IN OCCUPIED MODE AND HAS BEEN IN OCCUPIED MODE FOR MORE THAN: * = 5 MINUTES ** = 30 MINUTES

STATE OF LOUISIANA
RANDEL M. WINGO
NUMBER 36,474
05/20/26
PROFESSIONAL ENGINEER

NO.	DATE	BY	DESCRIPTION

REVISIONS

Johnson, Mirmiran & Thompson, Inc. — ARCHITECTS/ENGINEERS PLANNING SURVEYING MANAGEMENT
P.O. BOX 6-5, GREENWOOD, MISSISSIPPI • (662) 455-6443

A-E FIRM	USDA
PROJECT MANAGER	REH
EPM	WN
DESIGNER	SME
PPM	XXX
CHECKED BY	DRL
SAFETY & HEALTH	CM
JOB #	5825
REAL PROPERTY	JS

USDA Agricultural Research Service

USDA AGRICULTURAL RESEARCH SERVICE
SUGARCANE RESEARCH LABORATORY
HOUMA, LOUISIANA

HAVC CONTROLS

PROJECT NO.	XXX
DATE	05/20/2026

AGRICULTURAL RESEARCH SERVICE
FACILITIES ENGINEERING BRANCH
5106 SUNNYSIDE AVENUE
BELTSVILLE, MD 20705-5100

SHEET M-709

J:\Agronomic\2025 Jobs\5825 USDA Sugarcane Research Lab Houma LA\07 Working Folder\Mech\M-709.dwg
May 19, 2026 - 2:29pm

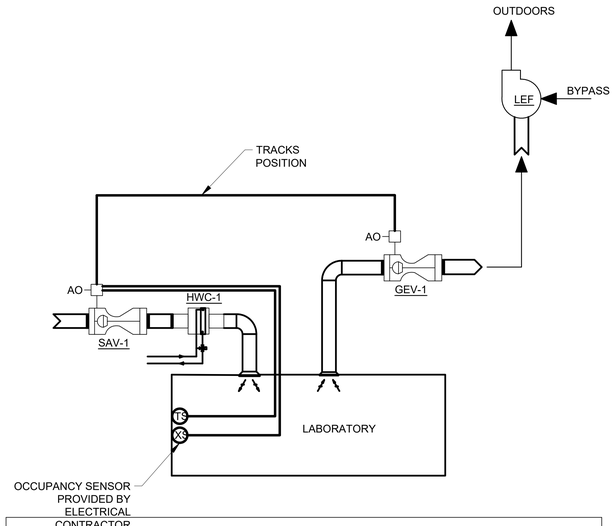

DDC PANEL LABORATORY AIR VALVES

POINT NAME	HARDWARE POINTS				SOFTWARE POINTS					SHOW ON GRAPHIC	NOTES
	AI	AO	DI	DO	AV	DV	SCHED	TREND	ALARM		
HW-CV REHEAT CONTROL VALVE (0-100%)		+						+		+	
SUPPLY AIR VALVE POSITION (0-100%)		+						+		+	
SUPPLY AIRFLOW SENSOR	+							+		+	
TS DISCHARGE TEMPERATURE SENSOR	+							+		+	
TS ZONE TEMPERATURE SENSOR	+							+		+	
ZONE TEMPERATURE HEATING SETPOINT					+		+			+	
ZONE TEMPERATURE COOLING SETPOINT					+		+			+	
GENERAL EXHAUST AIR FLOW	+							+		+	
GENERAL EXHAUST AIR FLOW SETPOINT					+		+			+	
GENERAL EXHAUST OFFSET SETPOINT					+		+			+	
GENERAL EXHAUST DAMPER COMMAND		+						+		+	
EXHAUST FAN START/STOP				+						+	
EXHAUST FAN SPEED CONTROL		+						+		+	
EXHAUST FAN STATUS			+							+	
EXHAUST FAN VFD BYPASS STARTER STATUS			+					+		+	
EXHAUST AIR FLOW					+			+		+	

SEQUENCES:

GENERAL:

1. CONTROL CONTRACTOR MUST FURNISH UNIT ACTUATORS TO UNIT MANUFACTURER FOR FACTORY INSTALLATION.
2. UNITS ARE PRESSURE INDEPENDENT TYPE.
3. PROVIDE CONTROL POWER TO EACH UNIT AS REQUIRED TO ACCOMPLISH SPECIFIC FUNCTION.
4. ALL SPACES WHICH ARE PROVIDED WITH OCCUPANCY SENSORS FOR CONTROL OF LIGHTING MUST OPERATE WITH OCCUPIED AND UNOCCUPIED AIRFLOW SETPOINTS BASE ON OCCUPANCY SENSOR.
5. FAIL POSITIONS: AIR VALVES (FAIL IN LAST POSITION), REHEAT COIL (FAIL IN LAST POSITION)

CONTROL SEQUENCE:

VARIABLE VOLUME SUPPLY WITH REHEAT AND OCCUPANCY OVERRIDE:

- SUPPLY AIRFLOW VALVE MUST MODULATE IN SEQUENCE WITH SUPPLY AIR REHEAT COIL VALVE TO MAINTAIN SPACE TEMPERATURE AT SETPOINT, AS INDICATE BY SPACE TEMPERATURE SENSOR.

GENERAL EXHAUST AIRFLOW TRACKING:

- GENERAL EXHAUST AIRFLOW VALVE MUST MODULATE TO MAINTAIN CONSTANT SUPPLY / EXHAUST AIRFLOW OFFSETS SHOWN IN SCHEDULES.

1 M-710 LABORATORY HVAC CONTROLS DIAGRAMS
SCALE:

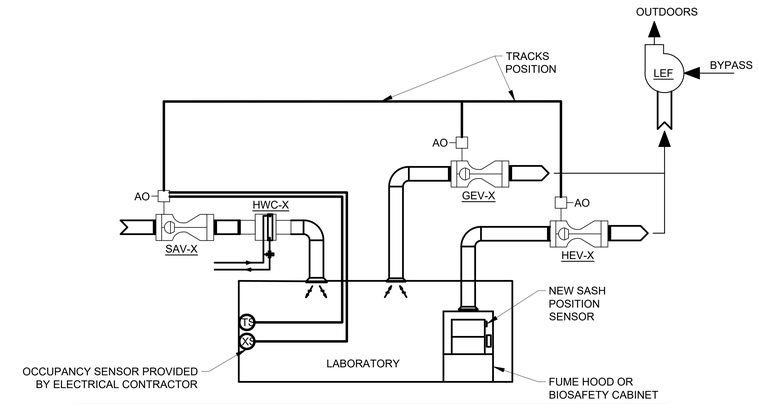

DDC PANEL LABORATORY AIR VALVES

POINT NAME	HARDWARE POINTS				SOFTWARE POINTS					SHOW ON GRAPHIC	NOTES
	AI	AO	DI	DO	AV	DV	SCHED	TREND	ALARM		
HW-CV REHEAT CONTROL VALVE (0-100%)		+						+		+	
AIR VALVE POSITION (0-100%)		+						+		+	
AIRFLOW SENSOR	+							+		+	
TS DISCHARGE TEMPERATURE SENSOR	+							+		+	
TS ZONE TEMPERATURE SENSOR	+							+		+	
ZONE TEMPERATURE HEATING SETPOINT					+		+			+	
ZONE TEMPERATURE COOLING SETPOINT					+		+			+	
GENERAL EXHAUST AIR FLOW	+							+		+	
GENERAL EXHAUST AIR FLOW SETPOINT					+		+			+	
GENERAL EXHAUST OFFSET SETPOINT					+		+			+	
GENERAL EXHAUST DAMPER COMMAND		+						+		+	
HOOD/CABINET EXHAUST AIR FLOW	+							+		+	
HOOD/CABINET EXHAUST AIR FLOW SETPOINT					+		+			+	
HOOD/CABINET EXHAUST DAMPER COMMAND		+						+		+	
EXHAUST FAN START/STOP				+						+	
EXHAUST FAN SPEED CONTROL		+						+		+	
EXHAUST FAN STATUS			+							+	
EXHAUST FAN VFD BYPASS STARTER STATUS			+					+		+	
EXHAUST AIR FLOW					+			+		+	

SEQUENCES:

GENERAL:

1. CONTROL CONTRACTOR MUST FURNISH UNIT ACTUATORS TO UNIT MANUFACTURER FOR FACTORY INSTALLATION.
2. UNITS ARE PRESSURE INDEPENDENT TYPE.
3. PROVIDE CONTROL POWER TO EACH UNIT AS REQUIRED TO ACCOMPLISH SPECIFIC FUNCTION.
4. ALL SPACES WHICH ARE PROVIDED WITH OCCUPANCY SENSORS FOR CONTROL OF LIGHTING MUST OPERATE WITH OCCUPIED AND UNOCCUPIED AIRFLOW SETPOINTS BASE ON OCCUPANCY SENSOR.
5. FAIL POSITIONS: AIR VALVES (FAIL IN LAST POSITION), REHEAT COIL (FAIL IN LAST POSITION)

CONTROL SEQUENCE:

VARIABLE VOLUME SUPPLY WITH REHEAT AND OCCUPANCY OVERRIDE:

- SUPPLY AIRFLOW VALVE MUST MODULATE IN SEQUENCE WITH SUPPLY AIR REHEAT COIL VALVE TO MAINTAIN SPACE TEMPERATURE AT SETPOINT, AS INDICATE BY SPACE TEMPERATURE SENSOR.

FUME HOOD CONSTANT VOLUME EXHAUST:

- FUME HOOD EXHAUST FAN MUST RUN CONTINUOUSLY. SPEED MUST BE ADJUSTED THROUGH THE BAS TO PRODUCE REQUIRED EXHAUST AIRFLOW VOLUME.
- EXHAUST FAN BYPASS MUST MODULATE TO MAINTAIN A MINIMUM OF 3000 FEET PER MINUTE VELOCITY THROUGH THE PLUME.

GENERAL EXHAUST AIRFLOW TRACKING:

- GENERAL EXHAUST AIRFLOW VALVE MUST MODULATE TO MAINTAIN CONSTANT SUPPLY / EXHAUST AIRFLOW OFFSETS SHOWN IN SCHEDULES. TOTAL EXHAUST IS THE SUM OF THE FUME FUME HOOD EXHAUST AND THE GENERAL EXHAUST.

2 M-710 LABORATORY WITH EQUIPMENT CONTROLS DIAGRAMS
SCALE:

Johnson, Mirmiran, Thompson, Inc.
PSW P.A.
ARCHITECTS/ENGINEERS PLANNING SURVEYING MANAGEMENT
P.O. BOX 3-3, GREENWOOD, MISSISSIPPI • (662) 455-6421

NO.	DATE	BY	DESCRIPTION

REVISIONS

A-E FIRM	USDA
PROJECT MANAGER	REH
EPM	WN
DESIGNER	SME
PPM	XXX
CHECKED BY	DRL
SAFETY & HEALTH	CM
JOB #	5825
REAL PROPERTY	JS

STATE OF LOUISIANA — DANIEL R. LYNCH — LICENSE NO. 41470 — 05/20/26 — PROFESSIONAL ENGINEER

USDA Agricultural Research Service

USDA AGRICULTURAL RESEARCH SERVICE
SUGARCANE RESEARCH LABORATORY
HOUMA, LOUISIANA

HAVC CONTROLS

PROJECT NO. XXX	AGRICULTURAL RESEARCH SERVICE FACILITIES ENGINEERING BRANCH 5106 SUNNYSIDE AVENUE BELTSVILLE, MD 20705-5100	SHEET M-710
DATE 05/20/2026		146 OF 176

J:\Agronomic\2025 Jobs\5825 USDA Sugarcane Research Lab Houma LA\07 Working Folder\Mech\M-710.dwg
May 19, 2026 - 2:29pm

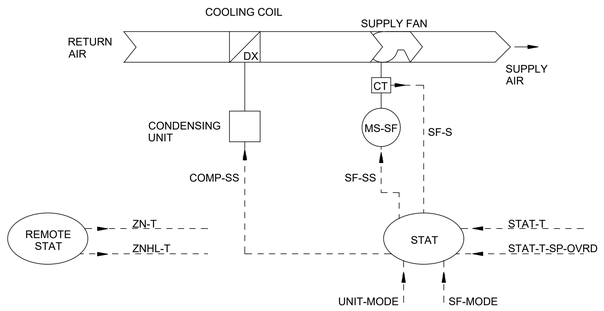

1 M-711 DUCTLESS SPLIT SYSTEM CONTROLS DIAGRAM

SCALE: NTS

SEQUENCE OF OPERATION -DUCTLESS SPLIT SYSTEM

IDU-1/ODU-1

GENERAL:
THE UNIT MUST BE CONTROLLED BY INTEGRAL CONTROLS. UNIT MODE (COOL/AUTO) AND SUPPLY FAN MODE (ON/OFF/AUTO) MUST BE USER CONFIGURABLE AT THE UNIT.

SYSTEM MUST HAVE THE FOLLOWING MODES OF OPERATION: OFF AND ON.

OFF:
OFF MODE MUST BE DETERMINED BY REMOTE SIGNAL FROM THE DDC SYSTEM OR USER INPUT AT THE UNIT.

THE SUPPLY FAN MUST BE DE-ENERGIZED. THE COMPRESSOR MUST BE DE-ENERGIZED.

ON:
ON MODE MUST BE AS DETERMINED BY REMOTE SIGNAL FROM THE DDC SYSTEM OR USER INPUT AT THE UNIT.

FAN CONTROL: THE SUPPLY FAN MODE MUST BE AUTO. THE SUPPLY FAN MUST CYCLE ON WHEN THE ZONE TEMPERATURE IS ABOVE THE COOLING SETPOINT. WHEN THE ZONE TEMPERATURE IS BELOW THE COOLING SETPOINT THE FAN MUST BE OFF.

SPACE TEMPERATURE CONTROL: THE TEMPERATURE CONTROL MODE MUST BE COOL. THE COMPRESSOR MUST CYCLE TO MAINTAIN ZONE AT COOLING TEMPERATURE SETPOINT. TO PREVENT SHORT CYCLING THERE MUST BE A MINIMUM ON/OFF CYCLE TIME.

ZONE TEMPERATURE SETPOINT ADJUST: THE OCCUPANT MUST BE ABLE TO ADJUST THE ZONE TEMPERATURE SETPOINT COOLER OR WARMER AT THE UNIT.

SAFETY CONTROLS:
THE UNIT MUST RUN SUBJECT TO INTERNAL SAFETIES.

CONTROLS GENERAL NOTES:

1. THE CONTROL DIAGRAMS AND SCHEMATICS ILLUSTRATE THE FUNCTIONAL REQUIREMENTS AND CONTROL RELATIONSHIPS. ALL ACCESSORIES, APPURTENANCES, AND DEVICES MAY NOT BE SHOWN IN DETAIL.
2. THE SPECIFICATIONS MUST BE CONSULTED FOR DETAILED REQUIREMENTS.
3. BUILDING CONTROL SYSTEM MUST BE COMPLETELY OPERATIONAL BEFORE BUILDING COMMISSIONING CAN TAKE PLACE.
4. CONTRACTOR IS RESPONSIBLE FOR DOMESTIC HOT WATER CONTROLS.
5. SOFTWARE COMMUNICATION IS REQUIRED BETWEEN THE DDC SYSTEM AND EQUIPMENT MANUFACTURER'S PACKAGED CONTROL SYSTEMS WHERE INDICATED.

"POINTS LIST SCHEDULE" GENERAL NOTES:

1. CELLS WITH "<___>" MUST BE DETERMINED BY THE CONTRACTOR
2. SPACES WHERE NO ENTRY IS REQUIRED CONTAIN " ~ "
3. AN ALARM PRIORITY OF CRITICAL (CRIT) INDICATES THAT THE ALARM MUST REMAIN IN ALARM UNTIL ACKNOWLEDGED BY A SYSTEM OPERATOR AND UNTIL THE ALARM CONDITION NO LONGER EXISTS.
4. AN ALARM PRIORITY OF INFORMATIONAL (INFO) INDICATES THAT THE ALARM MUST REMAIN IN ALARM UNTIL THE ALARM CONDITION NO LONGER EXISTS OR THE ALARM IS ACKNOWLEDGED.

						LDP AND M&C DISPLAY			OVERRIDES		ALARMS	
							M&C					
FUNCTION	NAME	DESCRIPTION	SETTING (WITH UNITS)	RANGE (WITH UNITS)	IO TYPE	LDP VIEW REQ'D	DISP REQ'D	TREND REQ'D	LDP OVRD REQ'D	M&C OVRD REQ'D	ALARM CONDITION (SEE NOTES)	ALARM PRIORITY
ZONE TEMPERATURE CONTROL	ZN-T	ZONE TEMPERATURE	~	<___>	AI	X	X	X	~	~	~	~
	ZNHL-T	ZONE TEMPERATURE HIGH LIMIT**	85 DEG	~	~	X	X	~	~	~	** HIGHER THAN SETTING FOR MORE THAN 2 MINUTES	INFO

GENERAL:
THIS SEQUENCE APPLIES TO THE EXISTING COMPRESSED AIR SYSTEM AND EXISTING VACUUM SYSTEM.

STATUS MONITORING:
THE EXISTING SYSTEMS MUST OPERATE ACCORDING TO FACTORY ON-BOARD CONTROLS. THE DDC SYSTEM MUST MONITOR THE STATUS OF UNIT INTERNAL ALARMS AND SAFETIES. AN INFORMATION ALARM MMUST BE GENERATED IF ANY INTERNAL ALARMS OR SAFETIES ARE ACTIVATED.

2 M-711 MONITORING OF EXISTING COMPRESSED AIR SYSTEM

SCALE: NTS

GENERAL:
THIS SEQUENCE APPLIES TO WATER PURIFICATION SYSTEM.

STATUS MONITORING:
THE EXISTING REVERSE OSMOSIS SYSTEM AND CONTRACTOR PROVIDED DEIONIZATION SYSTEM MUST OPERATE ACCORDING TO FACTORY ON-BOARD CONTROLS. THE DDC SYSTEM MUST MONITOR THE STATUS OF UNIT INTERNAL ALARMS AND SAFETIES. AN INFORMATION ALARM MUST BE GENERATED IF ANY INTERNAL ALARMS OR SAFETIES ARE ACTIVATED. THE DDC MUST MONITOR THE WATER QUALITY ENTERING AND LEAVING THE REVERSE OSMOSIS SYSTEM AND DEIONATION SYSTEM. UPON THE WATER QUALITY DROPPING BELOW MANUFACTURER STANDARDS AT ANY POINT, AN ALARM MUST BE INITIATED. THE DDC MUST MONITOR THE STATUS OF THE (EXISTING AND PROVIDED) PUMPS AND UV STERILIZERS AND ALARM IF ANY COMPONENT FAILS.

3 M-711 MONITORING OF WATER PURIFICATION SYSTEM

SCALE: NTS

Johnson, Mirmiran, Thompson, Inc.
PROFESSIONAL ENGINEERS, PLANNERS, SURVEYORS, MANAGEMENT
P.O. BOX 4-5, GREENWOOD, MISSISSIPPI • (662) 455-6441

NO.	DATE	BY	DESCRIPTION

REVISIONS

STATE OF LOUISIANA — CARL M. LYNCH — 05/20/26 — PROFESSIONAL ENGINEER

A-E FIRM	USDA
PROJECT MANAGER	REH
EPM	WN
DESIGNER	SME
PPM	XXX
CHECKED BY	DRL
SAFETY & HEALTH	CM
JOB #	5825
REAL PROPERTY	JS

USDA Agricultural Research Service

USDA AGRICULTURAL RESEARCH SERVICE
SUGARCANE RESEARCH LABORATORY
HOUMA, LOUISIANA

HAVC CONTROLS

PROJECT NO. XXX	AGRICULTURAL RESEARCH SERVICE FACILITIES ENGINEERING BRANCH 5106 SUNNYSIDE AVENUE BELTSVILLE, MD 20705-5100	SHEET M-711
DATE 05/20/2026		147 OF 176

J:\Agreement\2025 Jobs\5825 USDA Sugarcane Research Lab Houma LA\07 Working Folder\Mech\M-711.dwg
May 19, 2026 - 2:29pm

KEYED NOTES

1. CONNECT TO EXISTING TEMPORARILY CAPPED PIPING.

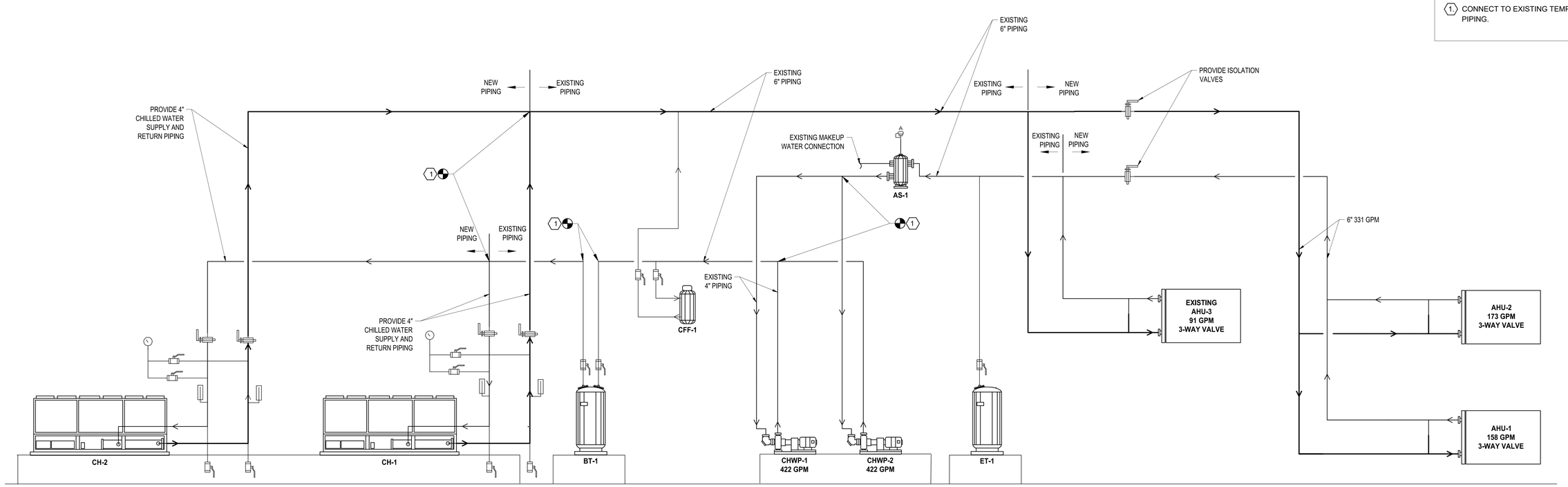

1 M-801 CHILLED WATER PIPING DIAGRAM

SCALE: NTS

LEGEND

- BUTTERFLY VALVE
- SPRING CHECK VALVE
- BALL VALVE
- ELECTRIC OPERATED BUTTERFLY VALVE
- 3WAY ELECTRIC CONTROL VALVE
- AUTOMATIC AIR VALVE
- STRAINER
- BALANCING VALVE
- PRESSURE GAUGE
- THERMOMETER
- POINT OF DEMOLITION/CONNECTION

J:\Agreement\2025 Jobs\5825 USDA Sugarcane Research Lab Houma LA\07 Working Folder\Mech\M-801.dwg
May 19, 2026 - 2:29pm

Johnson, Mirmiran & Thompson, Inc. P.A.
ARCHITECTS/ENGINEERS PLANNING SURVEYING MANAGEMENT
P.O. BOX 6.5, GREENWOOD, MISSISSIPPI • (662) 455-6443

NO.	DATE	BY	DESCRIPTION

REVISIONS

A-E FIRM	USDA
PROJECT MANAGER	REH
EPM	WN
DESIGNER	SME
PPM	XXX
CHECKED BY	DRL
SAFETY & HEALTH	CM
JOB #	5825
REAL PROPERTY	JS

STATE OF LOUISIANA
DANIEL R. LINDSEY
NUMBER 36,474
05/20/26
PROFESSIONAL ENGINEER

USDA Agricultural Research Service

USDA AGRICULTURAL RESEARCH SERVICE
SUGARCANE RESEARCH LABORATORY
HOUMA, LOUISIANA

CHILLED WATER PIPING DIAGRAM

PROJECT NO. XXX	AGRICULTURAL RESEARCH SERVICE FACILITIES ENGINEERING BRANCH 5106 SUNNYSIDE AVENUE BELTSVILLE, MD 20705-5100	SHEET M-801
DATE 05/20/2026		148 OF 176

KEYED NOTES

1. CONNECT TO EXISTING TEMPORARILY CAPPED PIPING.

EXISTING MAKEUP WATER CONNECTION
AS-2
B-1
B-2
HTWP-1 456 GPM
HTWP-2 456 GPM
ET-2
219.1 GPM
4" 236.87 GPM
4" 233.67 GPM
4" 230.47 GPM
4" 228.37 GPM
4" 226.37 GPM
4" 221.77 GPM
4" 221.77 GPM
3" 107.37 GPM
3" 98 GPM
3" 107.37 GPM
3" 98 GPM
EXISTING UH-3 3.2 GPM
EXISTING UH-2 3.2 GPM
EXISTING UH-7 2.1 GPM
EXISTING UH-1 2.0 GPM
BBH-1 4.6 GPM
VAV-1-17 9.37 GPM
AHU-1 56 GPM
3" 114.4 GPM
AHU-2 42 GPM
VAV-1-12 3.84 GPM
VAV-1-11 3.34 GPM
VAV-1-8 9.17 GPM
2" 57.17 GPM
2-1/2" 60.51 GPM
2-1/2" 57.23 GPM
2" 53.33 GPM
2-1/2" 61.07 GPM
2-1/2" 69.68 GPM
2-1/2" 69.9 GPM
2" 44.5 GPM
2" 44.72 GPM
2-1/2" 53.89 GPM
HWC-13 5.1 GPM
VAV-1-14 8.83 GPM
VAV-1-13 5.42 GPM
3" 75.32 GPM
2" 39.08 GPM
VAV-1-15 3.51 GPM
1-1/2" 35.57 GPM
VAV-1-16 8.37 GPM
1-1/4" 27.2 GPM
1" 9.04 GPM
2-1/2" 78.72 GPM
VAV-1-9 8.04 GPM
VAV-1-10 1.0 GPM
2" 35.68 GPM
1" 7.6 GPM
1" 7.6 GPM
HWC-14 2.5 GPM
3" 106.8 GPM
HWC-12 2.7 GPM
3" 78.83 GPM
3" 104.1 GPM
HWC-10 8.3 GPM
1" 10.3 GPM
2" 32.49 GPM
1-1/4" 18.6 GPM
VAV-1-7 3.19 GPM
2-1/2" 81.91 GPM
VAV-1-6 1.09 GPM
2-1/2" 83.0 GPM
VAV-1-1 3.79 GPM
2" 31.4 GPM
3" 87.2 GPM
HWC-2 2.9 GPM
3" 90.1 GPM
1-1/4" 24.3 GPM
HWC-1 8.1 GPM
3" 98.2 GPM
1" 16.2 GPM
3/4" 5.2 GPM
3/4" 5.2 GPM
HWC-3 2.6 GPM
3" 86.79 GPM
2" 27.61GPM
3" 103.4 GPM
1" 11 GPM
VAV-1-2 3.3 GPM
3" 90.09 GPM
1-1/2" 24.31 GPM
HWC-5 0.9 GPM
3" 104.3 GPM
HWC-9 2.6 GPM
VAV-1-3 1.43 GPM
3" 91.52 GPM
1-1/2" 22.88 GPM
3" 106.8 GPM
1" 10.1 GPM
HWC-6 2.5 GPM
3/4" 7.6 GPM
3/4" 6.6 GPM
HWC-8 1.0 GPM
VAV-1-4 0.94 GPM
3" 92.46 GPM
1-1/2" 21.94 GPM
3" 107.8 GPM
3" 113.5 GPM
3/4" 5.7 GPM
3/4" 5.7 GPM
HWC-11 2.8 GPM
VAV-1-5 3.34 GPM
3" 95.8 GPM
HWC-4 0.9 GPM
HWC-7 2.9 GPM
3" 114.4 GPM
EXISTING UH-4 1.6 GPM
EXISTING UH-8 1.6 GPM
EXISTING UH-9 1.6 GPM
EXISTING UH-10 1.6 GPM
EXISTING UH-11 1.6 GPM
EXISTING UH-12 1.6 GPM
EXISTING UH-13 1.6 GPM
EXISTING HC-3-03 0.5 GPM
EXISTING HC-3-01 6.4 GPM
EXISTING HC-3-04 0.5 GPM
EXISTING HC-3-10 5.4 GPM
EXISTING UH-5 6.4 GPM
EXISTING HC-3-09 3.1 GPM
EXISTING AHU-3 17.5 GPM
EXISTING HC-3-05 0.5 GPM
EXISTING HC-3-06 1.6 GPM
EXISTING HC-3-08 1.6 GPM
EXISTING HC-3-07 0.5 GPM
EXISTING HC-3-13 4.5 GPM
EXISTING HC-3-11 1.2 GPM
EXISTING HC-3-12 1.5 GPM
73.1 GPM
EXISTING BREEDING GREENHOUSE
46 GPM
EXISTING CROSSING GREENHOUSE
36 GPM
EXISTING GREENHOUSE
EXISTING UH-6 1.6 GPM

LEGEND

- BUTTERFLY VALVE
- SPRING CHECK VALVE
- BALL VALVE
- ELECTRIC OPERATED BUTTERFLY VALVE
- 3WAY ELECTRIC CONTROL VALVE
- AUTOMATIC AIR VALVE
- STRAINER
- BALANCING VALVE
- PRESSURE GAUGE
- THERMOMETER
- POINT OF DEMOLITION/CONNECTION

1 M-802 HEADING WATER PIPING DIAGRAM

SCALE: NOT TO SCALE

NO.	DATE	BY	DESCRIPTION

REVISIONS

Johnson, Mirmiran & Thompson, Inc. ARCHITECTS/ENGINEERS PLANNERS SURVEYING MANAGEMENT P.O. BOX 510, GREENWOOD, MISSISSIPPI (662) 455-6423

USDA Agricultural Research Service

USDA AGRICULTURAL RESEARCH SERVICE
SUGARCANE RESEARCH LABORATORY
HOUMA, LOUISIANA

HEATING WATER PIPING DIAGRAM

A-E FIRM	USDA
PROJECT MANAGER	REH
EPM	WN
DESIGNER	SME
PPM	XXX
CHECKED BY	DRL
SAFETY & HEALTH	CM
JOB #	5825
REAL PROPERTY	JS

STATE OF LOUISIANA — MARK W. NOLD — LICENSE NO. 37... — 05/20/26 — PROFESSIONAL ENGINEER

PROJECT NO.	XXX
DATE	05/20/2026

AGRICULTURAL RESEARCH SERVICE
FACILITIES ENGINEERING BRANCH
5106 SUNNYSIDE AVENUE
BELTSVILLE, MD 20705-5100

SHEET M-802

149 OF 176

J:\greenwood\2025 Jobs\5825 USDA Sugarcane Research Lab Houma LA\07 Working Folder\Mech\M-802.dwg
May 19, 2026 - 2:32pm

GENERAL SYMBOLS LEGEND

(NOT ALL SYMBOLS MAY APPLY, TYP.)

SYMBOL / KEY	DESCRIPTION
	CONDUCTORS IN CONDUIT CONCEALED WITHIN WALL OR CEILING. TIC MARKS INDICATE NUMBER OF CONDUCTORS. THE EQUIPMENT GROUNDING CONDUCTOR IS NOT SHOWN, BUT SHALL BE PROVIDED. SIZE THE EQUIPMENT GROUNDING CONDUCTOR AND THE CONDUIT PER THE NEC. THE ABSENCE OF TIC MARKS SIGNIFIES THAT TWO CONDUCTORS PLUS AN EQUIPMENT GROUNDING CONDUCTOR SHOULD BE PROVIDED. FOR EXAMPLE, THE MARKINGS TO THE LEFT SIGNIFY THAT THREE CONDUCTORS PLUS AN EQUIPMENT GROUNDING CONDUCTOR SHOULD BE PROVIDED.
10	THE TEXT INSIDE THE ARC INDICATES THE AWG SIZE OF THE CONDUCTORS THAT SHALL BE RUN IN THE CONDUIT. THE ABSENCE OF TEXT SIGNIFIES THAT THE CONDUCTORS SHOULD BE #12 AWG.
	CIRCUITRY RUN IN STRAIGHT LINE SEGMENTS SIGNIFIES EXPOSED SURFACE-MOUNTED RACEWAY (SEE SPECIFICATIONS).
	CONDUCTORS IN CONDUIT CONCEALED BELOW GRADE OR FLOOR. TIC MARKS INDICATE NUMBER OF CONFUCTORS. THE EQUIPMENT GROUNDING CONDUCTOR IS NOT SHOWN, BUT SHALL BE PROVIDED. SIZE THE EQUIPMENT GROUNDING CONDUCTOR AND THE CONDUIT PER THE NEC. THE ABSENCE OF TIC MARKS SIGNIFIES THAT TWO CONDUCTORS PLUS AN EQUIPMENT GROUNDING CONDUCTOR SHOULD BE PROVIDED. THE MARKINGS TO THE LEFT SIGNIFY THAT THREE CONDUCTORS PLUS AN EQUIPMENT GROUNDING CONDUCTOR SHOULD BE PROVIDED.
LA-1	HOMERUN TO PANELBOARD. ARC DENOTES CONCEALED CIRCUITRY. TEXT DENOTES PANELBOARD NAME WITH CIRCUIT NUMBER. DEVICES HAVING CIRCUIT NUMBERS LOCATED BESIDE THEM MAY NOT SHOW THE CIRCUIT NUMBERS AT THE HOMERUN ARROWS.
LA-1	PARTIAL HOMERUN TO PANELBOARD. COMBINE ALL PARTIAL HOMERUNS THAT ARE ON THE SAME CIRCUIT IN A JUNCTION BOX PRIOR TO ENTERING THE PANELBOARD.
	LOW VOLTAGE CONDUCTORS USED FOR MOTION DETECTOR CIRCUITRY. SEE MANUFACTURER'S RECOMMENDATIONS FOR CONDUCTOR REQUIREMENTS.
LA1-13	PANELBOARD AND CIRCUIT DESIGNATION

POWER OUTLET AND COMMUNICATIONS LEGEND

SYMBOL / KEY	DESCRIPTION
	DUPLEX RECEPTACLE, NEMA 5-20R, MOUNTED 18" A.F.F. TO CENTERLINE OF BOX UNLESS NOTED OTHERWISE.
?	DOUBLE DUPLEX RECEPTACLE, NEMA 5-20R, ONE COVER PLATE, MOUNTED 18" A.F.F. TO CENTERLINE OF BOX UNLESS NOTED OTHERWISE
	DUPLEX RECEPTACLE, NEMA 5-20R, MOUNTED WITH BOTTOM OF BOX 2" ABOVE COUNTER BACKSPLASH. WHERE THERE IS NO BACKSPLASH MOUNT 6" ABOVE COUNTER. WHERE RECEPTACLE IS SHOWN IN AN AREA WITH NO COUNTER, MOUNT 45" A.F.F. TO CENTERLINE OF BOX.
DF	DUPLEX RECEPTACLE, NEMA 5-20R, FOR DRINKING FOUNTAIN FED FROM GFCI BREAKER. MOUNTED IN ACCORDANCE3 WITH MANUFACTURER'S ROUGH-IN REQUIREMENTS. VERIFY CONNECTION TYPE PRIOR TO BID. RECEPTACLE SHALL BE MOUNTED, CONCEALED BEHIND THE SHROUD OF THE DRINKING FOUNTAIN.
	NEMA 15-20R, MOUNTED 18" A.F.F. TO CENTERLINE OF BOX UNLESS NOTED OTHERWISE.
	NEMA 14-30R, MOUNTED 18" A.F.F. TO CENTERLINE OF BOX UNLESS NOTED OTHERWISE.
	NEMA 6-30R, MOUNTED 18" A.F.F. TO CENTERLINE OF BOX UNLESS NOTED OTHERWISE.
	DUPLEX TELEPHONE/DATA OUTLET MOUNTED 24" A.F.F. TO CENTERLINE OF BOX UNLESS NOTED OTHERWISE.
WAP	WIRELESS ACCESS POINT

LIGHTING AND SWITCHING LEGEND

SYMBOL / KEY	DESCRIPTION	SYMBOL / KEY	DESCRIPTION
?	2'X4' RECESSED FIXTURE.	$	SWITCHPOD. SENSORSWITCH #sPODM-SA OR APPROVED EQUAL. MOUNT CENTERLINE OF BOX AT 45"A.F.F. UNLESS NOTED OTHERWISE.
?	2'X4' RECESSED EMERGENCY FIXTURE.	M$	AUTOMATIC WALL SWITCH. SENSORSWITCH #WSXA-PDT-VA OR APPROVED EQUAL. MOUNT CENTERLINE OF BOX AT 45" A.F.F. UNLESS NOTED OTHERWISE.
?	SURFACE MOUNTED OR SUSPENDED FIXTURE.		
?	SURFACE MOUNTED OR SUSPENDED EMERGENCY FIXTURE.	Mϕ	AUTOMATIC WALL SWITCH WITH INTEGRAL 0-10V DIMMER. SENSORSWITCH #WSXA-PDT-D-VA OR APPROVED EQUAL. MOUNT CENTERLINE OF BOX AT 45"A.F.F. UNLESS NOTED OTHERWISE.
? ?	CEILING MOUNTED EXIT SIGN. PROVIDE CHEVRONS AS INDICATED BY ARROWS.	ϕ	0-10V LED DIMMER WALL SWITCH. SENSORSWITCH #sPODM-SA-D OR APPROVED EQUAL. MOUNT CENTERLINE OF BOX AT 45"A.F.F. UNLESS NOTED OTHERWISE.
? ?	WALL MOUNTED EXIT SIGN. PROVIDE CHEVRONS AS INDICATED BY ARROWS.		
?	WALL MOUNTED FIXTURE.	3$	3-WAY SWITCHPOD. SENSORSWITCH #sPODM-SA-3X OR APPROVED EQUAL. MOUNT CENTERLINE OF BOX AT 45"A.F.F. UNLESS NOTED OTHERWISE.
? ?	WALL MOUNTED EMERGENCY FIXTURE.	PP	POWER PACK MOUNTED ABOVE CEILING. SENSORSWITCH #PP20 OR APPROVED EQUAL.
?	RECESSED CAN FIXTURE	MD	PASSIVE INFRARED AND ULTRASONIC DUAL TECHNOLOGY OCCUPANCY SENSOR WITH A 28' RADIAL COVERAGE. CEILING MOUNTED. SENSORSWITCH #CM-PDT-10 OR APPROVED EQUAL.
?	RECESSED EMERGENCY CAN FIXTURE		
?	POLE MOUNTED SITE FIXTURE	T$	HORSEPOWER RATED SWITCH WITH THERMAL OVERLOADS (MANUAL MOTOR STARTER).
?	WALL MOUNTED LINEAR FIXTURE.		
	GROUND MOUNTED FLAG POLE LIGHT		

LIGHTNING PROTECTION

SYMBOL / KEY	DESCRIPTION	SYMBOL / KEY	DESCRIPTION
	AIR TERMINAL		GROUNDING CONDUCTOR
	BONDING	EXISTING GROUND RING	EXISTING GROUND RING
	BOND PLATE TO STRUCTURE		DOWN CABLE / GROUND RING CONNECTION
GR	GROUND ROD		GROUND ROD TEST WELL

SPECIAL SYSTEMS LEGEND

SYMBOL / KEY	DESCRIPTION	SYMBOL / KEY	DESCRIPTION
FACP	FIRE ALARM CONTROL PANEL.	M	MOTION DETECTOR TO RELEASE MAGNETIC LOCK.
ACP	ACCESS CONTROL PANEL.	CR	CARD READER.
BMS	BALANCED MAGNETIC SWITCH/ DOOR POSITION SENSOR	PX	PUSH TO EXIT BUTTON.
		PB	PUSH BUTTON.
C	EXTERIOR WALL MOUNTED CAMERA	EL	MAGNETIC LOCK.
C	INTERIOR CEILING MOUNTED DOME CAMERA	PS	POWER SUPPLY.
IDS	INTRUSION DETECTION HEAD-END EQUIPMENT	CCTV	CCTV HEAD-END EQUIPMENT

ONE-LINE DIAGRAM, SCHEDULE, AND DISTRIBUTION LEGEND

SYMBOL / KEY	DESCRIPTION	SYMBOL / KEY	DESCRIPTION
####	FEEDER KEY	J	CEILING MOUNTED JUNCTION BOX.
	DISCONNECT SWITCH DIST BOARD MTD.	J	WALL MOUNTED JUNCTION BOX.
		~	FLEX. CONNECTION TO EQUIPMENT.
	CKT BREAK DIST BOARD MTD.	?	PANELBOARD.
	FUSE DIST BOARD MTD.		MAGNETIC MOTOR STARTER/VFD
	FUSED DISC SWITCH 600V & UNDER.	?/?/?	NON-FUSED DISCONNECT SWITCH. TEXT INDICATES AMPACITY/NUMBER OF POLES/ENCLOSURE TYPE.
	GROUND		
	XFMR	?/?/? F-?	FUSED DISCONNECT SWITCH. TEXT INDICATES AMPACITY/NUMBER OF POLES/ENCLOSURE TYPE; F-(RATING OF FUSES).
	EQUIPMENT		
	GENERATOR		
M	METER	#	CONTINUATION, UPSTREAM LABEL
SPD	SURGE PROTECTION DEVICE.		LOCAL DISCONNECT
GFI	GROUND FAULT INTERRUPTER.	C	LOCAL CONTACTOR
TC	TIMECLOCK	PNL	PANELBOARD (ONE-LINE)
PES	PHOTOELECTRIC SWITCH		
J	JUNCTION BOX	*	TRANSFER SWITCH (ATS : AUTOMATIC) (MTS: MANUAL)
PB	PULL BOX		
T	TRANSFORMER (PLAN VIEW)		MOTOR

VOLTAGE DROP CHART FOR 20A, 1Ø CIRCUITS

VOLTAGE	CIRCUIT LENGTH	CONDUCTOR SIZE (AWG)
120	<50'	#12
120	>50'	#10
120	>90'	#8
120	>140'	#6
277	<130'	#12
277	>130'	#10
277	>200'	#8
277	>330'	#6

VOLTAGE DROP CHART NOTES:

1) CIRCUIT SIZES INDICATED ON THE DRAWINGS ARE MINIMUM REQUIREMENTS. REFER TO THIS CHART FOR UPSIZING CONDUCTORS AS NEEDED.
2) DO NOT CONNECT CONDUCTORS LARGER THAN #10 DIRECTLY TO A RECEPTACLE OR A SWITCH. PROVIDE A JUNCTION BOX TO DOWNSIZE THE CONDUCTOR TO #12 AT THE DEVICE.
3) FOR CIRCUITS LONGER THAN THOSE LISTED ABOVE, CONSULT WITH THE ENGINEER FOR CONDUCTOR SIZES.

MASTER NOTES - ELECTRICAL:

1. THE CONTRACTOR SHALL ABIDE BY ALL FEDERAL, STATE, AND/OR LOCAL CODES. IF A DISCREPANCY BETWEEN CODES OCCURS, THE MOST STRINGENT SHALL PREVAIL.
2. THE CONTRACTOR SHALL FIELD VERIFY EXISTING CONDITIONS PRIOR TO THE COMMENCEMENT OF ANY WORK. SHOULD DISCREPANCIES BE DISCOVERED, THE CONTRACTOR SHALL VERIFY INTENT WITH THE ENGINEER/OWNER BEFORE PROCEEDING.
3. COORDINATE LOCATIONS OF ALL CEILING MOUNTED DEVICES WITH OTHER TRADES PRIOR TO INSTALLATION.
4. COORDINATE ALL ROUGH-IN REQUIREMENTS FOR OWNER FURNISHED EQUIPMENT WITH THE OWNER PRIOR TO BEGINNING WORK. THESE DRAWINGS ARE BASED ON EXISTING BUILDING CONSTRUCTION DRAWINGS, SITE SURVEYS, AND OWNER FURNISHED EQUIPMENT SPECIFICATIONS.

GENERAL NOTES:

1. DEVICES NOTED AS 'GFI' SHALL BE GROUND FAULT CIRCUIT INTERRUPTING DEVICES.
2. DEVICES NOTED AS 'WP' SHALL BE WEATHERPROOF WHILE-IN-USE.
3. DEVICES NOTED AS 'W/E' MEANS "PROVIDED WITH EQUIPMENT".
4. PROVIDE UNSWITCHED POWER TO THE EMERGENCY BATTERY PACKS.
5. W/E DENOTES PROVIDED WITH EQUIPMENT.
6. MINIMUM RACEWAY SIZE SHALL BE 3/4". INCREASE RACEWAY SIZE AS REQUIRED TO LIMIT RACEWAY FILL RATIO TO LESS THAN 40% FULL.
7. THE ELECTRICAL CONTRACTOR SHALL CAREFULLY COORDINATE WORK WITH OTHER TRADES THROUGH THE GENERAL CONTRACTOR AND SHALL BE RESPONSIBLE FOR SECURING SPACE REQUIREMENTS FOR ELECTRICAL EQUIPMENT CLEARANCE FOR RECESSED LUMINAIRES AND CORRECT ROUGH-IN LOCATIONS OF ELECTRICAL CONNECTIONS.
8. VERIFY DOOR SWINGS WITH ARCHITECTURAL DRAWINGS BEFORE ROUGHING IN WALL SWITCHES. SWITCHES IN THE SAME LOCATION SHALL BE GANGED TOGETHER IN ONE COMMON BACKBOX AND SHALL HAVE ONE COMMON FACE PLATE.
9. ALL FEEDERS AND BRANCH CIRCUITS SHALL INCLUDE A GREEN INSULATED GROUND CONDUCTOR, SIZED PER THE NATIONAL ELECTRICAL CODE, OR AS SHOWN, CONNECTED TO EACH DEVICE AND OUTLET BOX ON THE CIRCUIT AND TO THE PANELBOARD GROUND BUS. PROVIDE A DEDICATED NEUTRAL CONDUCTOR FOR EACH BRANCH CIRCUIT. MULTIPLE BRANCH CIRCUITS IN ONE RACEWAY REQUIRE ONLY ONE GROUND CONDUCTOR.
10. VERIFY LUMINAIRE, CEILING MOUNTED OCCUPANCY SENSOR LOCATIONS WITH ARCHITECTURAL REFLECTED CEILING PLANS FOR EXACT LOCATIONS AND DIMENSIONS PRIOR TO INSTALLATION. VERIFY EXACT LOCATIONS OF MOTORS AND EQUIPMENT BEFORE ROUGHING-IN.
11. "PROVIDE" IS AN INCLUSIVE TERM USED TO DESCRIBE ASPECTS OF THE WORK TO BE ACCOMPLISHED, AND IS HEREBY DEFINED TO REQUIRE TO STORE, FURNISH, INSTALL, MOUNT, CONNECT, CONTROL AND POWER EQUIPMENT INDICATED, AS WELL AS ALL APPURTENANCES REQUIRED TO MAKE ELECTRICAL SYSTEMS OPERATE AS INDICATED WITHIN THESE DRAWINGS AND SPECIFICATIONS AND TO FULFILL THE SCOPE OF WORK.
12. ALL CONDUCTORS SHALL BE COPPER
13. CONTRACTOR SHALL FIELD VERIFY ALL EXISTING CONDITIONS, DIMENSIONS AND ELEVATIONS BEFORE PROCUREMENT OF ANY MATERIALS AND DEVELOPMENT OF ANY SHOP DRAWINGS OR SUBMITTALS.
14. PROVIDE LABELS ON ALL RECEPTACLES, WALL MOUNTED LIGHT SWITCHES/OCCUPANCY SENSORS AND JUNCTION BOXES INDICATING THE SOURCE PANEL & CIRCUIT(S). TEXT SHALL BE BLACK, 1/4". LABELS ABOVE FINISHED CEILING CAN BE HANDWRITTEN WITH AN INDELIBLE MARKER.
15. CIRCUIT SIZES INDICATED ON THE DRAWINGS ARE MINIMUM REQUIREMENTS.
16. DO NOT CONNECT CONDUCTORS LARGER THAN #10 DIRECTLY TO A RECEPTACLE OR A SWITCH. PROVIDE A JUNCTION BOX TO DOWNSIZE THE CONDUCTOR TO #12 AT THE DEVICE.
17. FOR CIRCUITS LONGER THAN THOSE LISTED IN THE VOLTAGE DROP CHART, CONSULT WITH THE ENGINEER FOR CONDUCTOR SIZES.
18. COORDINATE ALL ACCESS CONTROL REQUIREMENTS WITH THE CONTRACTING OFFICER PRIOR TO SUBMITTING EQUIPMENT.
19. COORDINATE ALL INTRUSION DETECTION REQUIREMENTS WITH THE CONTRACTING OFFICER PRIOR TO SUBMITTING EQUIPMENT.
20. COORDINATE ALL CCTV REQUIREMENTS WITH THE CONTRACTING OFFICER PRIOR TO SUBMITTING EQUIPMENT.

J:\greenwood\2025 Jobs\5825 USDA Sugarcane Research Lab Houma LA\07 Working Folder\Elec\E-001.dwg
May 20, 2026 - 9:05am

THE Johnson McAdams FIRM P.A.
ARCHITECTS/ENGINEERS PLANNING SURVEYING MANAGEMENT
P.O. BOX 513, GREENWOOD, MISSISSIPPI - (662) 455-4943

BRADEN T. DUKE, LICENSED PROFESSIONAL ENGINEER, 35781, STATE OF MISSISSIPPI — 05/20/26

NO.	DATE	BY	DESCRIPTION

REVISIONS

A-E FIRM	USDA
PROJECT MANAGER: REH	EPM: WN
DESIGNER: BTD	PPM: XXX
CHECKED BY: BTD	SAFETY & HEALTH: CM
JOB #: 5825	REAL PROPERTY: JS

USDA Agricultural Research Service

USDA AGRICULTURAL RESEARCH SERVICE
SUGARCANE RESEARCH LABORATOR
HOUMA, LOUISIANA

ELECTRICAL LEGEND

PROJECT NO. XXX
DATE 05/20/2026

AGRICULTURAL RESEARCH SERVICE
FACILITIES ENGINEERING BRANCH
5106 SUNNYSIDE AVENUE
BELTSVILLE, MD 20705-5100

SHEET E-001
150 OF 176

GENERAL NOTES

1. ALL HEADHOUSE ELECTRICAL PANELS AND EQUIPMENT IS NOT SHOWN. ALL EXISTING PANELS, CIRCUITRY, ETC. SHALL BE EXISTING TO REMAIN UNLESS OTHERWISE NOTED.

KEYED NOTES

1. THE EXISTING GENERATOR AND SUB BASE TANK SHALL BE CAREFULLY DISCONNECTED, REMOVED, AND TURNED OVER TO THE GOVERNMENT FOR REUSE. EQUIPMENT SHALL NOT BE DEMOLISHED OR DAMAGED. CONTRACTOR SHALL COORDINATE REMOVAL AND STORAGE LOCATION WITH THE CONTRACTING OFFICER. ALL EXISTING UNDERGROUND CONDUITS SHALL REMAIN IN PLACE.
2. CIRCUITRY FOR FIRE PUMP SHALL BE DEMOLISHED. THE EXISTING CONDUIT SHALL REMAIN AND BE REUSED.
3. THE EXISTING CIRCUITRY AND CONDUIT TO GREENHOUSE SHALL REMAIN AND BE PROTECTED THROUGHOUT THE DEMOLITION PHASE.
4. CIRCUITRY BETWEEN GENERATOR AND ATS SHALL BE DEMOLISHED. THE EXISTING CONDUIT SHALL REMAIN AND BE REUSED.
5. THE EXISTING CONDUIT AND CIRCUITRY FOR CH-1 SHALL BE DEMOLISHED BACK TO SWBD HDP. SEE ES101 FOR CH-1 LOCATION.

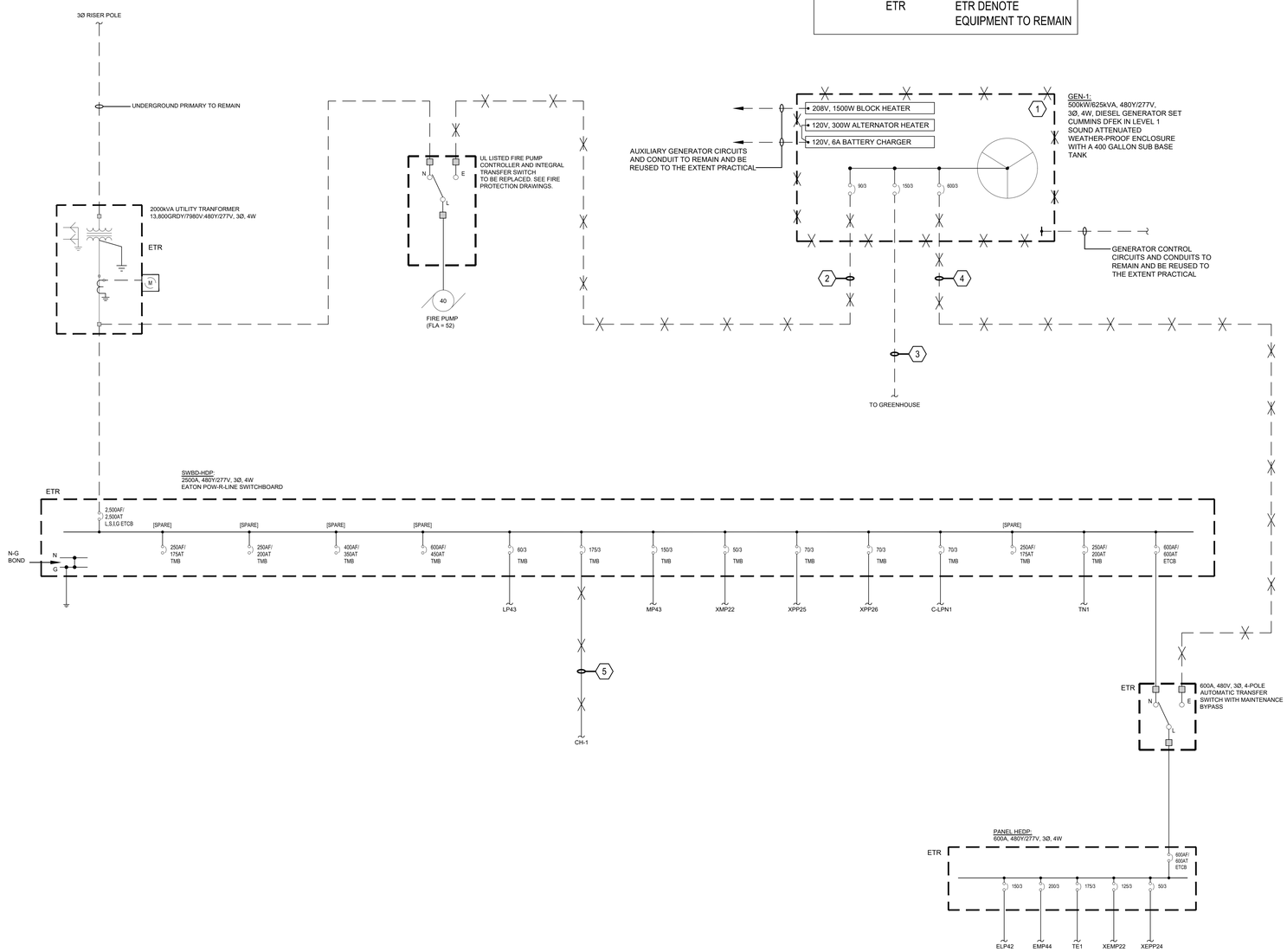

GENERAL DEMOLITION NOTES

A. PRIOR TO BEGINNING WORK, SURVEY EXISTING ELECTRICAL SYSTEMS. DOCUMENT, IN WRITING, SIGNED BY THE CONTRACTING OFFICER, ANY PORTIONS OF THE EXISTING SYSTEMS THAT ARE NOT OPERATING PROPERLY BEFORE CONSTRUCTION BEGINS. ANY ELECTRICAL SYSTEMS FOUND INOPERABLE AT THE END OF THE CONSTRUCTION PROCESS THAT HAVE NOT BEEN SO DOCUMENTED SHALL BE REPAIRED BY THE CONTRACTOR AT HIS OWN EXPENSE.

B. PRIOR TO BEGINNING THE DEMOLITION PROCESS, CONDUCT A COMPREHENSIVE SITE SURVEY WITH THE ASSISTANCE OF THE CONTRACTING OFFICER. IDENTIFY AND MARK ALL EXISTING EQUIPMENT TO REMAIN AND ALL EXISTING RACEWAYS AND CIRCUITRY THAT ARE PRESENTLY PASSING THROUGH THE CONSTRUCTION AREA THAT ARE FEEDING EXISTING EQUIPMENT TO REMAIN.

C. ALL DEMOLISHED EQUIPMENT (PUMPS, FIXTURES, ETC.) SHALL BE TURNED OVER TO THE GOVERNMENT. THE GOVERNMENT SHALL BE GIVEN THE FIRST RIGHT OF REFUSAL FOR EQUIPMENT BEING REMOVED. FOR EQUIPMENT THAT THE OWNER WISHES TO RETAIN, STORE THEM IN THE LOCATION DESIGNATED BY THE GOVERNMENT. ALL OTHER FIXTURES SHALL BECOME THE PROPERTY OF THE CONTRACTOR, WHO SHALL BE RESPONSIBLE FOR THEIR DISPOSAL.

D. REMOVE ELECTRICAL EQUIPMENT IN AREAS BEING DEMOLISHED, AND ELECTRICAL EQUIPMENT FEEDING OTHER EQUIPMENT BEING DEMOLISHED. REMOVE RACEWAYS AND CIRCUITRY BACK TO THE PANEL OF ORIGINATION. WHERE CIRCUITS ARE NOT BEING COMPLETELY DEMOLISHED, REMOVE RACEWAYS AND CIRCUITRY BACK TO A JUNCTION BOX OR OTHER COMMON CONNECTION POINT AND RECIRCUIT EXISTING ELECTRICAL EQUIPMENT TO REMAIN AS REQUIRED. WHERE NECESSARY, COMPLETELY REFEED EXISTING ELECTRICAL EQUIPMENT THAT IS TO REMAIN IF REQUIRED. IT IS THE INTENT OF THESE DOCUMENTS THAT ALL EXISTING EQUIPMENT TO REMAIN BE KEPT COMPLETELY OPERABLE DURING CONSTRUCTION AND LEFT COMPLETELY OPERABLE AT THE END OF THE CONSTRUCTION PROCESS.

E. THE ELECTRICAL DEMOLITION DRAWINGS ARE DIAGRAMMATIC IN NATURE AND ARE PROVIDED TO CONVEY THE GENERAL SCOPE OF WORK. ALL EXISTING DEVICES SHALL BE FIELD VERIFIED PRIOR TO BEGINNING WORK OR SUBMITTING PRICES. REROUTE CIRCUITRY OR REFEED EXISTING EQUIPMENT TO REMAIN AS REQUIRED TO FACILITATE THE COMPLETION OF ALL WORK ON THIS PROJECT.

F. THE ELECTRICAL EQUIPMENT SHOWN IS PROVIDED TO CONVEY THE APPROXIMATE SCOPE OF THE WORK. IT IS THE INTENT OF THESE DOCUMENTS THAT ALL ELECTRICAL EQUIPMENT, LIGHTING, LIGHTING CONTROLS, RACEWAYS, AND CIRCUITRY IN THE AREA OF WORK BE DEMOLISHED UNLESS NOTED OTHERWISE.

G. PERFORM DEMOLITION WORK AS FOLLOWS:
   1. DEMOLISH DEVICE OR END OF LINE EQUIPMENT.
   2. DEMOLISH RACEWAYS AND CIRCUITRY FEEDING END OF LINE EQUIPMENT (INCLUDING ALL RACEWAYS AND CIRCUITRY ASSOCIATED WITH CONTROLS).
   3. LEAVE ALL RACEWAYS AND CIRCUITRY THAT COMPLETELY PASS-THROUGH THE SPACE COMPLETELY OPERABLE BY REROUTING THE CIRCUITS AS REQUIRED.

1 ED601 EXISTING SINGLE LINE DIAGRAM
SCALE: NO SCALE

J:\greenwood\2025 Jobs\5825 USDA Sugarcane Research Lab Houma LA\07 Working Folder\Elec\E-601.dwg
May 20, 2026 - 9:50am

NO.	DATE	BY	DESCRIPTION

REVISIONS

Johnson, Mirmiran & Thompson, Inc.
ENGINEERS/ARCHITECTS PLANNERS SURVEYING TRANSPORTATION
P.O. BOX 513, GREENWOOD, MISSISSIPPI (662) 455-4443

USDA Agricultural Research Service

USDA AGRICULTURAL RESEARCH SERVICE
SUGARCANE RESEARCH LABORATOR
HOUMA, LOUISIANA

EXISTING SINGLE LINE DIAGRAM

A-E FIRM	USDA
PROJECT MANAGER	REH
EPM	WN
DESIGNER	BTD
PPM	XXX
CHECKED BY	BTD
SAFETY & HEALTH	CM
JOB #	5825
REAL PROPERTY	JS
PROJECT NO.	XXX
DATE	05/20/2026

AGRICULTURAL RESEARCH SERVICE
FACILITIES ENGINEERING BRANCH
5106 SUNNYSIDE AVENUE
BELTSVILLE, MD 20705-5100

SHEET ED601

RECEPTACLE DETAIL NOTES:

A. THESE DRAWINGS ARE BASED ON THE BEST INFORMATION AVAILABLE AT THE TIME OF DESIGN. COORDINATE WITH THE MILLWORK CONTRACTOR TO DETERMINE THE EXACT LOCATION OF OUTLETS BEING PLACED IN AND AROUND MILLWORK.

B. RECEPTACLES SHOWN AS GFI MAY BE NON GFI TYPE RECEPTACLES IF FED FROM A 20/1 GFI BREAKER OR THE LOAD SIDE OF A GFI RECEPTACLE IN THE SAME ROOM, ON THE SAME CIRCUIT AND RATED 20 AMP FEED-THRU CAPACITY. COVER PLATES SHALL BE CLEARLY MARKED GFI.

C. NON GFI RECEPTACLES SHALL NOT BE CONNECTED IN A FEED-THRU MANNER. WIRE CONNECTIONS IN RECEPTACLE BOXES SHALL BE MADE IN A PIGTAIL MANNER AS SHOWN IN RECEPTACLE DETAIL.

D. RECEPTACLES SHALL NOT BE CONNECTED IN A FEED-THRU MANNER. WIRE CONNECTIONS IN RECEPTACLE BOXES SHALL BE MADE IN A PIGTAIL MANNER.

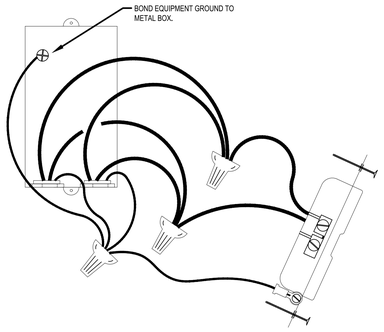

1 E-501 RECEPTACLE DETAIL
SCALE: NONE

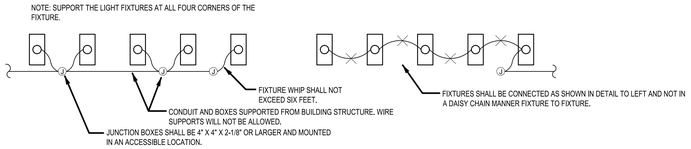

2 E-501 FIXTURE CONNECTION DETAIL
SCALE: NONE

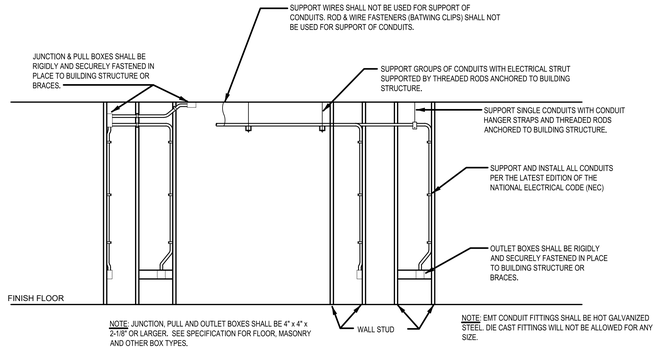

3 E-501 JUNCTION AND OUTLET BOX DETAIL
SCALE: NONE

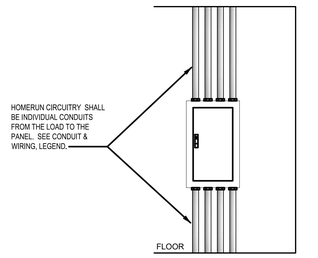

NOTE: HOMERUN CONDUITS SHALL BE SIZE 3/4" OR LARGER, CONDUITS SHALL BE LIMITED TO THREE CURRENT CARRYING CONDUCTORS.

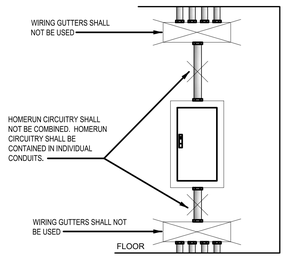

4 E-501 HOMERUN DETAIL
SCALE: NONE

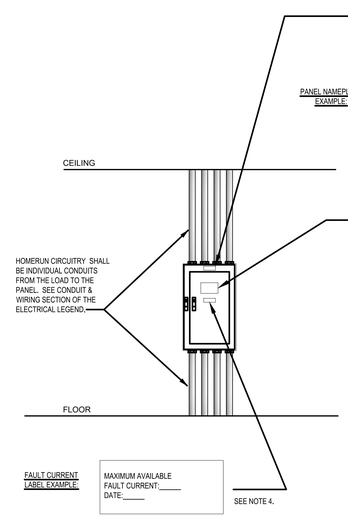

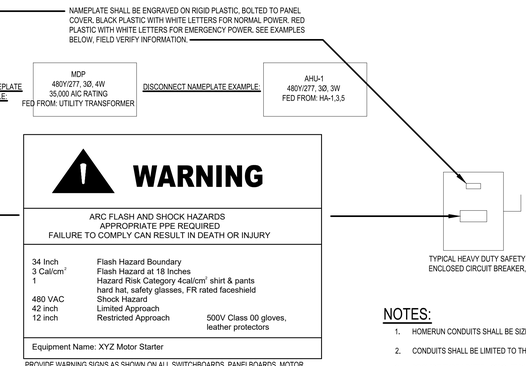

5 E-501 ELECTRICAL EQUIPMENT LABEL DETAILS
SCALE: NONE

NOTES:

1. HOMERUN CONDUITS SHALL BE SIZE 3/4" OR LARGER.
2. CONDUITS SHALL BE LIMITED TO THREE CURRENT CARRYING CONDUCTORS.
3. PROVIDE TYPEWRITTEN CIRCUIT DIRECTORIES INSIDE DOOR OF EACH PANELBOARD. EACH CIRCUIT SHALL BE DISTINGUISHED FROM ALL OTHERS.
4. PROVIDE A LABEL FOR ALL SWITCHGEAR, SWITCHBOARDS, MOTOR CONTROL CENTERS, PANELBOARDS, AND OTHER SERVICE EQUIPMENT THAT LEGIBLY DISPLAYS THE MAXIMUM AVAILABLE FAULT CURRENT. THE MAXIMUM FAULT CURRENT INFORMATION SHALL BE TAKEN FROM THE ARC FLASH/PROTECTIVE DEVICE COORDINATION STUDY PERFORMED BY THE GEAR MANUFACTURER. THE LABEL SHALL INCLUDE THE DATE THAT THE FAULT CURRENT CALCULATION WAS PERFORMED AND BE OF SUFFICIENT DURABILITY TO WITHSTAND THE ENVIRONMENT OF THE EQUIPMENT.

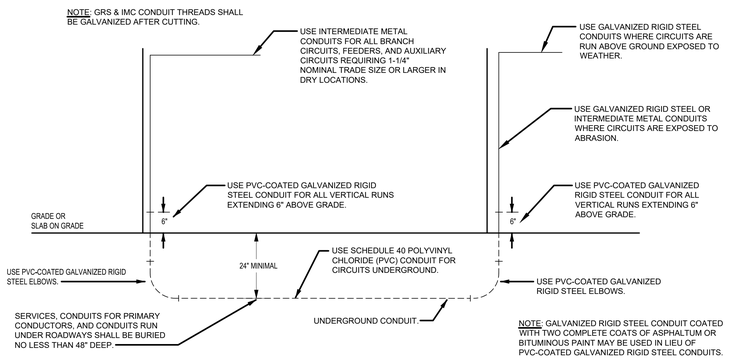

6 E-501 CONDUIT DETAIL
SCALE: NONE

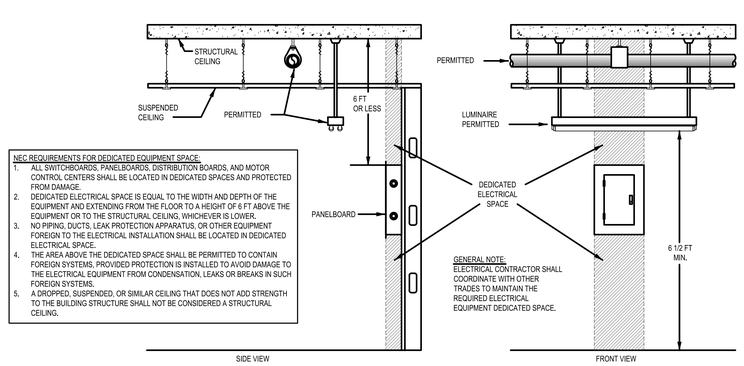

7 E-501 DEDICATED SPACE DETAIL
SCALE: NONE

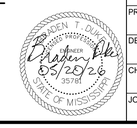

NO.	DATE	BY	DESCRIPTION

REVISIONS

Lee Johnson McAdams PSPE — ARCHITECTS/ENGINEERS PLANNING SURVEYING SEVERODVOST — P.O. BOX 913, GREENWOOD, MISSISSIPPI - (662) 455-6943

USDA Agricultural Research Service

USDA AGRICULTURAL RESEARCH SERVICE
SUGARCANE RESEARCH LABORATOR
HOUMA, LOUISIANA

ELECTRICAL DETAILS

A-E FIRM	USDA
PROJECT MANAGER	EPM
REH	WN
DESIGNER	PPM
BTD	XXX
CHECKED BY	SAFETY & HEALTH
BTD	CM
JOB #	REAL PROPERTY
5825	JS

PROJECT NO.	XXX
DATE	05/20/2026

AGRICULTURAL RESEARCH SERVICE
FACILITIES ENGINEERING BRANCH
5100 SUNNYSIDE AVENUE
BELTSVILLE, MD 20705-5100

SHEET E-501
152 OF 176

J:\greenwood\2026 Jobs\5825 USDA Sugarcane Research Lab Houma LA\07 Working Folder\Dec\E-501.dwg
May 20, 2026 - 9:05am

NOTES:

1. 3500 PSI MINIMUM 28 DAY COMPRESSIVE STRENGTH CONCRETE WITH GRADE 60 RE-BARS.
2. IF WATER IS PRESENT IN HOLE, REMOVE BEFORE POURING CONCRETE.
3. FOUNDATION EXCAVATION SHALL BE BY 24" AUGER IN UNDISTURBED OR PROPERLY COMPACTED FILL.
4. MINIMUM ALLOWABLE SOIL BEARING PRESSURE 3000 PSF. NOTIFY ENGINEER IF BEARING PRESSURE IS LESS.
5. AIR ENTRAINMENT: 4 TO 6%.

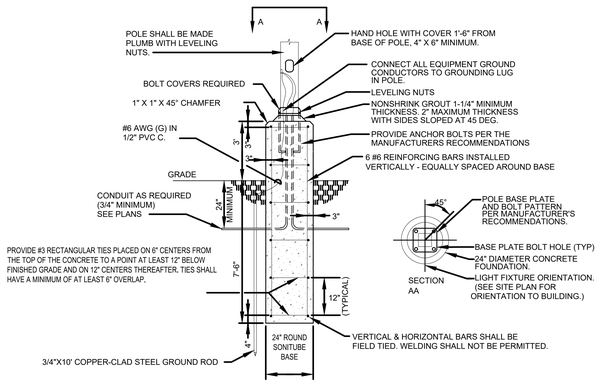

1 E-502 POLE BASE DETAIL
SCALE: NONE

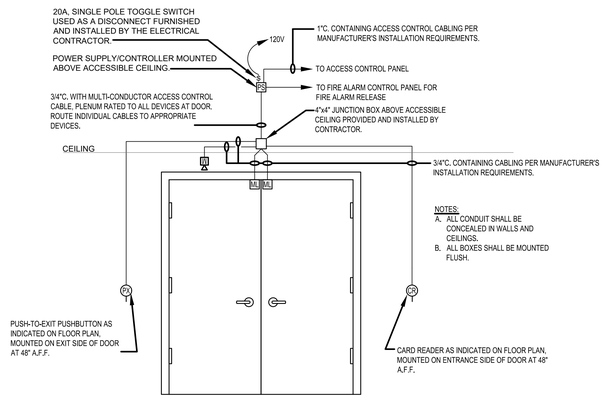

2 E-502 MAG-LOCK ACCESS CONTROL DETAIL
SCALE: NONE

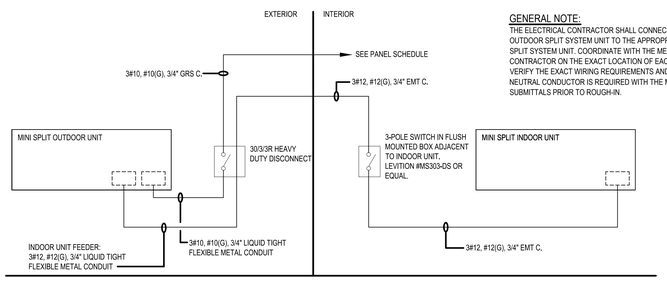

GENERAL NOTE:
THE ELECTRICAL CONTRACTOR SHALL CONNECT EACH OUTDOOR SPLIT SYSTEM UNIT TO THE APPROPRIATE INDOOR SPLIT SYSTEM UNIT. COORDINATE WITH THE MECHANICAL CONTRACTOR ON THE EXACT LOCATION OF EACH UNIT. VERIFY THE EXACT WIRING REQUIREMENTS AND IF A NEUTRAL CONDUCTOR IS REQUIRED WITH THE MECHANICAL SUBMITTALS PRIOR TO ROUGH-IN.

3 E-502 TYPICAL MINI-SPLIT CONNECTION DETAIL
SCALE: NONE

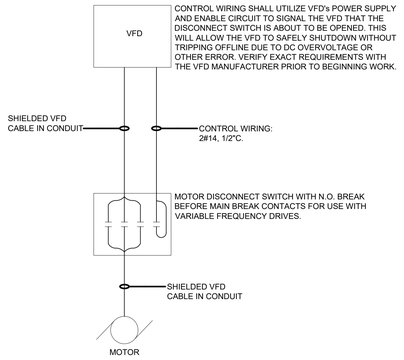

4 E-502 VFD/MOTOR DISCONNECT SWITCH WIRING DETAIL
SCALE: NONE

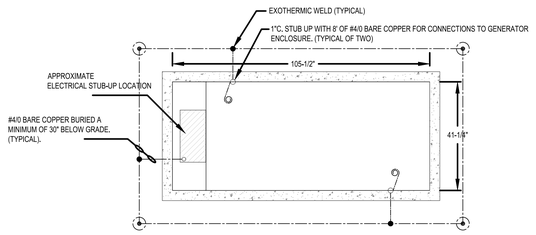

GENERATOR PAD NOTE:

A. VERIFY GENERATOR DIMENSIONS AND CONDUIT STUB-UP LOCATIONS PRIOR TO POURING PAD. AN 8" OVERHANG SHALL BE PROVIDED ON EACH SIDE OF THE GENERATOR. PROVIDE PVC SLEEVES AS REQUIRED FOR THE GROUNDING ELECTRODE CONDUCTORS.

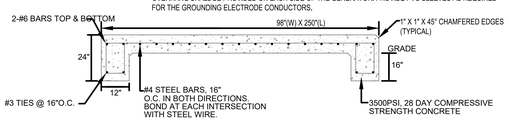

5 E-502 GENERATOR CONCRETE PAD AND GROUNDING DETAIL
SCALE: NONE

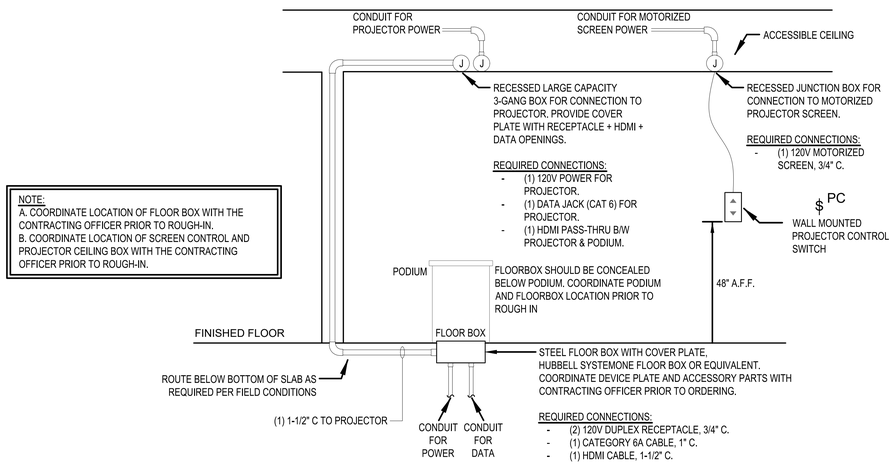

6 E-502 FLOOR BOX AND PROJECTOR DETAIL
SCALE: NONE

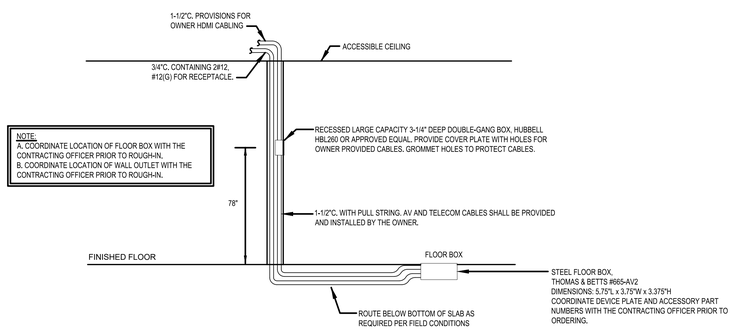

7 E-502 FLOOR BOX AND WALL MOUNTED TV DETAIL
SCALE: NONE

Johnson Mirmiran Adams
ARCHITECTS | ENGINEERS | PLANNERS
P.O. BOX 513, GREENWOOD, MISSISSIPPI - (662) 455-6643

NO.	DATE	BY	DESCRIPTION

REVISIONS

USDA Agricultural Research Service

USDA AGRICULTURAL RESEARCH SERVICE
SUGARCANE RESEARCH LABORATOR
HOUMA, LOUISIANA

ELECTRICAL DETAILS

A-E FIRM	USDA
PROJECT MANAGER	EPM
REH	WN
DESIGNER	PPM
BTD	XXX
CHECKED BY	SAFETY & HEALTH
BTD	CM
JOB #	REAL PROPERTY
5825	JS

PROJECT NO. XXX
DATE 05/20/2026

AGRICULTURAL RESEARCH SERVICE
FACILITIES ENGINEERING BRANCH
5106 SUNNYSIDE AVENUE
BELTSVILLE, MD 20705-5100

SHEET E-502
153 OF 176

BRENT T. DAVIS
REGISTERED PROFESSIONAL ENGINEER
35787
05/20/26
STATE OF MISSISSIPPI

J:\greenwood\2025_Jobs\5825 USDA Sugarcane Research Lab Houma LA\07 Working Folder\Dwg\E-502.dwg
May 20, 2026 - 9:05am

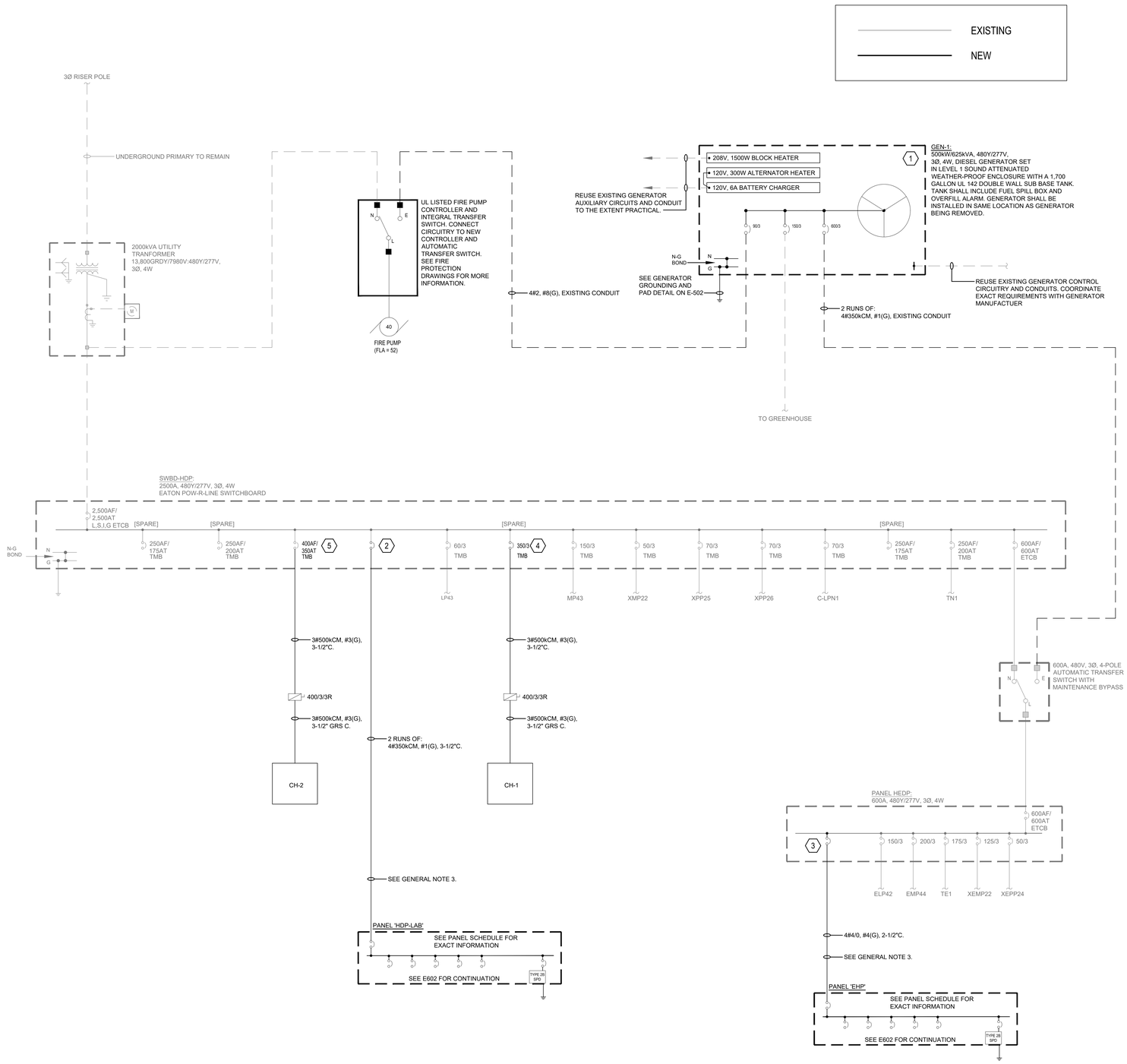

1 E-601 SINGLE LINE DIAGRAM

SCALE: NO SCALE

GENERAL NOTES

1. PANEL HDP-LAB AND PANEL EHP-LAB MUST BE EQUIPPED WITH METERING SYSTEM TO MONITOR AND RECORD ELECTRICAL PARAMETERS FOR ALL FEEDER BREAKERS. PROVIDE ALL REQUIRED CTs, VOLTAGE CONNECTIONS, CONTROL POWER, AND ACCESSORIES FOR A COMPLETE SYSTEM. SYSTEM MUST INCLUDE DATA LOGGING AND COMMUNICATION VIA BACnet FOR BAS INTEGRATION.
2. COORDINATE ANY REQUIRED OUTAGES WITH THE CONTRACTING OFFICER ATLEAST 14 DAYS IN ADVANCE.
3. PROVIDE PULLBOXES SIZED PER THE NEC FOR CONDUIT BETWEEN HEADHOUSE AND LAB BUILDING. PROVIDE ALL NECESSARY EXPANSION JOINTS BETWEEN THE EXISTING HEADHOUSE BUILDING AND LAB BUILDING.

KEYED NOTES

1. 500kW/625kVA DIESEL GENSET IN A LEVEL 2 SOUND ATTENUATED WEATHERPROOF ENCLOSURE. PROVIDE GENERATOR WITH 1700 GALLON SUB BASE FUEL TANK. UTILIZE EXISTING FEEDER AND CONTROL CONDUITS MADE AVAILABLE DURING DEMOLITION TO REFEED EXISTING EQUIPMENT. COORDINATE EXACT CONTROL REQUIREMENTS WITH GENERATOR MANUFACTURER PRIOR TO INSTALLATION.
2. REPLACE EXISTING 450AT/600AF BREAKER WITH A 600AT/600AF BREAKER. MATCH EXISTING TYPE AND AIC RATING.
3. PROVIDE AND INSTALL A 200/3 BREAKER IN AVAILABLE SPACE. MATCH EXISTING TYPE AND AIC RATING.
4. REPLACE EXISTING 175AT/250AF BREAKER FEEDING CH-1 WITH A 350AT/400AF BREAKER. MATCH EXISTING TYPE AND AIC RATING.
5. PROVIDE AND INSTALL A 350AT/400AF BREAKER IN AVAILABE SPACE. MATCH EXISTING TYPE AND AIC RATING.

NO.	DATE	BY	DESCRIPTION

REVISIONS

Johnson Mirmiran Adams — ARCHITECTS/ENGINEERS PLANNERS SURVEYING ENVIRONMENT — P.O. BOX 313, GREENWOOD, MISSISSIPPI (662) 455-4545

A-E FIRM	USDA
PROJECT MANAGER	REH
EPM	WN
DESIGNER	BTD
PPM	XXX
CHECKED BY	BTD
SAFETY & HEALTH	CM
JOB #	5825
REAL PROPERTY	JS

BRADEN T. DUKE — 25787 — STATE OF MISSISSIPPI — 05/20/26

USDA Agricultural Research Service

USDA AGRICULTURAL RESEARCH SERVICE
SUGARCANE RESEARCH LABORATOR
HOUMA, LOUISIANA

SINGLE LINE DIAGRAM

PROJECT NO.	XXX
DATE	05/20/2026

AGRICULTURAL RESEARCH SERVICE
FACILITIES ENGINEERING BRANCH
5100 SUNNYSIDE AVENUE
BELTSVILLE, MD 20705-5100

SHEET E-601
154 OF 176

J:\Agronwood\2025 Jobs\5825 USDA Sugarcane Research Lab Houma LA\07 Working Folder\Dwg\E-601.dwg
May 20, 2026 - 9:05am

GENERAL NOTES

1. PANEL HDP-LAB AND PANEL EHP MUST BE EQUIPPED WITH METERING SYSTEM TO MONITOR AND RECORD ELECTRICAL PARAMETERS FOR ALL FEEDER BREAKERS. PROVIDE ALL REQUIRED CTs, VOLTAGE CONNECTIONS, CONTROL POWER, AND ACCESSORIES FOR A COMPLETE SYSTEM. SYSTEM MUST INCLUDE DATA LOGGING AND COMMUNICATION VIA BACnet FOR BAS INTEGRATION.
2. COORDINATE ANY REQUIRED OUTAGES WITH THE CONTRACTING OFFICER ATLEAST 14 DAYS IN ADVANCE.
3. PROVIDE PULLBOXES SIZED PER THE NEC FOR CONDUIT BETWEEN HEADHOUSE AND LAB BUILDING. PROVIDE ALL NECESSARY EXPANSION JOINTS BETWEEN THE EXISTING HEADHOUSE BUILDING AND LAB BUILDING.

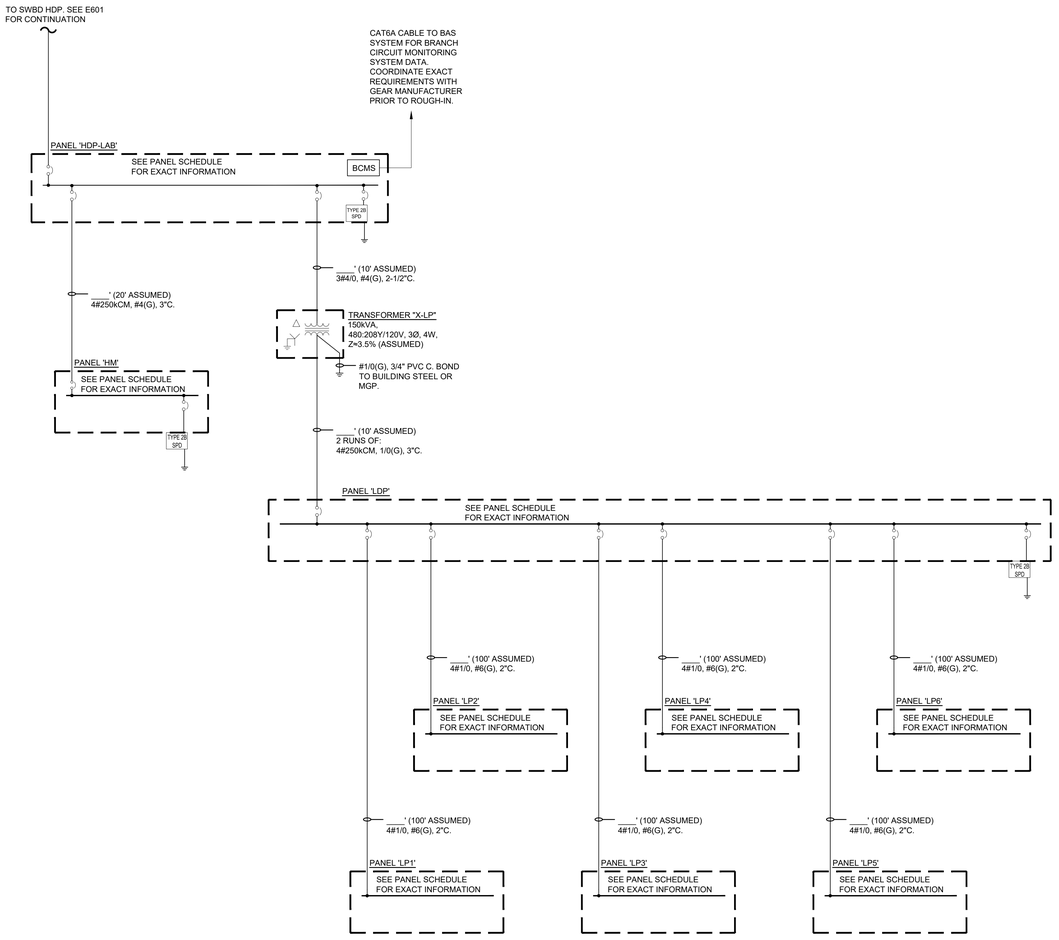

1 E-602 NORMAL POWER - SINGLE LINE DIAGRAM (CONT.)
SCALE: NO SCALE

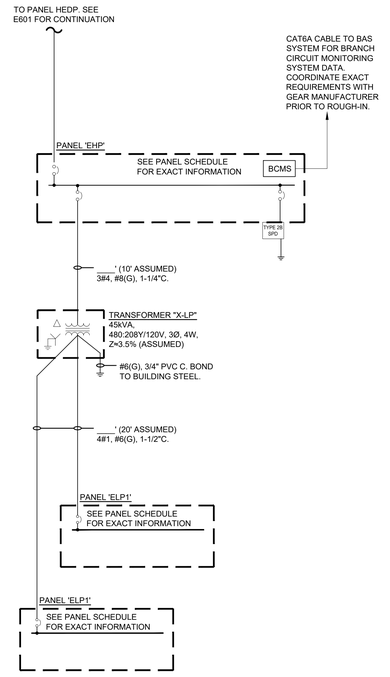

2 E-602 STANDBY POWER - SINGLE LINE DIAGRAM (CONT.)
SCALE: NO SCALE

FAULT CURRENT	
PANEL HDP	
TO	A.F.C.
HDP-LAB	22,130
PANEL HEDP	
TO	A.F.C.
EHP	10,708

Johnson Mirmiran Adams PA
ARCHITECTS/ENGINEERS PLANNERS SURVEYING MANAGEMENT
P.O. BOX 313, GREENWOOD, MISSISSIPPI (662) 455-6423

NO.	DATE	BY	DESCRIPTION

REVISIONS

A-E FIRM	USDA
PROJECT MANAGER: REH	EPM: WN
DESIGNER: BTD	PPM: XXX
CHECKED BY: BTD	SAFETY & HEALTH: CM
JOB #: 5825	REAL PROPERTY: JS

USDA Agricultural Research Service

USDA AGRICULTURAL RESEARCH SERVICE
SUGARCANE RESEARCH LABORATOR
HOUMA, LOUISIANA

SINGLE LINE DIAGRAM (CONT.)

PROJECT NO.	AGRICULTURAL RESEARCH SERVICE FACILITIES ENGINEERING BRANCH 5106 SUNNYSIDE AVENUE BELTSVILLE, MD 20705-5100	SHEET
XXX		E-602
DATE: 05/20/2026		155 OF 176

GREEN T. DUNN JR. REGISTERED PROFESSIONAL ENGINEER 20781 Brandon Pike 05/20/26 STATE OF MISSISSIPPI

J:\greenwood\2025 Jobs\5825 USDA Sugarcane Research Lab Houma LA\07 Working Folder\Elec\E-601.dwg
May 20, 2026 - 9:55am

PANEL HDP-LAB

LOCATION: 2ND FLOOR ELEC. RM. | VOLT: 480Y/277V, 3Ø, 4W | BUS: 600A
LUG LOCATION: TOP FEED | MAIN BUS: 600A MAIN BREAKER | MOUNTING: SURFACE
PANELBOARD SCCR RATING (A): 42,000

CIRCUIT NO.	BREAKER AMPS	BREAKER POLES	DESCRIPTION	PHASE LOAD (KVA) A		B		C		DESCRIPTION	BREAKER AMPS	BREAKER POLES	CIRCUIT NO.
1	250	3	PANEL HM	26.6	55.6					XFMR "X-LP" (PANEL LDP)	225	3	2
3	-	-	-			26.6	55.9			-	-	-	4
5	-	-	-					26.6	51.2	-	-	-	6
7	125	3	SPARE	0.0	0.0					SPARE	70	3	8
9	-	-	-			0.0	0.0			-	-	-	10
11	-	-	-					0.0	0.0	-	-	-	12
13	125	3	SPARE	0.0	0.0					SPARE	70	3	14
15	-	-	-			0.0	0.0			-	-	-	16
17	-	-	-					0.0	0.0	-	-	-	18
19	125	3	SPARE	0.0	0.0					SPD TYPE 2A	30	3	20
21	-	-	-			0.0	0.0			-	-	-	22
23	-	-	-					0.0	0.0	-	-	-	24
TOTAL				82.2		82.5		77.8					

PANEL HM

LOCATION: 2ND FLOOR ELEC. RM. | VOLT: 480Y/277V, 3Ø, 4W | BUS: 250A
LUG LOCATION: TOP FEED | MAIN BUS: MAIN LUGS ONLY | MOUNTING: SURFACE
PANELBOARD SCCR RATING (A): 42,000

CIRCUIT NO.	BREAKER AMPS	BREAKER POLES	DESCRIPTION	PHASE LOAD (KVA) A		B		C		DESCRIPTION	BREAKER AMPS	BREAKER POLES	CIRCUIT NO.
1	70	3	SPARE	0.0	5.8					LEF-1A (15HP)	40	3	2
3	-	-	-			0.0	5.8			-	-	-	4
5	-	-	-					0.0	5.8	-	-	-	6
7	35	3	AHU-1	8.7	5.8					LEF-1B (15HP)	40	3	8
9	-	-	-			8.7	5.8			-	-	-	10
11	-	-	-					8.7	5.8	-	-	-	12
13	35	3	AHU-2	6.3	0.0					SPARE	40	3	14
15	-	-	-			6.3	0.0			-	-	-	16
17	-	-	-					6.3	0.0	-	-	-	18
19	35	3	SPARE	0.0	0.0					SPARE	20	1	20
21	-	-	-			0.0	0.0			SPARE	20	1	22
23	-	-	-					0.0	0.0	SPARE	20	1	24
25	20	1	SPARE	0.0	0.0					SPARE	20	1	26
27	20	1	SPARE			0.0	0.0			SPARE	20	1	28
29	20	1	SPARE					0.0	0.0	SPARE	20	1	30
31	20	1	SPARE	0.0	0.0					SPARE	20	1	32
33	20	1	SPARE			0.0	0.0			SPARE	20	1	34
35	20	1	SPARE					0.0	0.0	SPARE	20	1	36
37	20	1	SPARE	0.0	0.0					SPD TYPE 2B	30	3	38
39	20	1	SPARE			0.0	0.0			-	-	-	40
41	20	1	SPARE					0.0	0.0	-	-	-	42
TOTAL				26.6		26.6		26.6					

PANEL LDP

LOCATION: 2ND FLOOR ELEC. RM. | VOLT: 208Y/120V, 3Ø, 4W | BUS: 600A
LUG LOCATION: BOTTOM FEED | MAIN BUS: 500A MAIN BREAKER | MOUNTING: SURFACE
PANELBOARD SCCR RATING (A): 22,000

CIRCUIT NO.	BREAKER AMPS	BREAKER POLES	DESCRIPTION	PHASE LOAD (KVA) A		B		C		DESCRIPTION	BREAKER AMPS	BREAKER POLES	CIRCUIT NO.
1	150	1	PANEL LP1	10.2	10.7					PANEL LP4	150	3	2
3	-	1	-			11.7	11.9			-	-	-	4
5	-	1	-					10.0	11.7	-	-	-	6
7	150	1	PANEL LP2	10.4	8.2					PANEL LP5	150	3	8
9	-	1	-			10.3	6.9			-	-	-	10
11	-	1	-					9.8	7.1	-	-	-	12
13	150	1	PANEL LP3	10.8	5.3					PANEL LP6	150	3	14
15	-	1	-			11.3	3.7			-	-	-	16
17	-	1	-					10.2	2.4	-	-	-	18
19	150	3	SPARE	0.0	0.0					SPD TYPE 2B	30	3	20
21	-	-	-			0.0	0.0			-	-	-	22
23	-	-	-					0.0	0.0	-	-	-	24
TOTAL				55.6		55.9		51.2					

PANEL LP1

LOCATION: SERVICE/ULTILITY CORRIDOR 1041 | VOLT: 208Y/120V, 3Ø, 4W | BUS: 225A
LUG LOCATION: TOP FEED | MAIN BUS: MAIN LUGS ONLY | MOUNTING: SURFACE
PANELBOARD SCCR RATING (A): 10,000

CIRCUIT NO.	BREAKER AMPS	BREAKER POLES	DESCRIPTION	PHASE LOAD (KVA) A		B		C		DESCRIPTION	BREAKER AMPS	BREAKER POLES	CIRCUIT NO.
1	20	1	SCOPE 1035	0.4	1.0					PATHOLOGY/MOLECULAR GENTETICS (CLEAN) 1045	30	2	2
3	20	1	SCOPE 1035			0.4	1.0			-	-	-	4
5	20	1	PATHOLOGY/MOLECULAR GENTETICS (DIRTY) 1046					0.4	1.0	PATHOLOGY/MOLECULAR GENTETICS (CLEAN) 1045	30	2	6
7	20	1	PATHOLOGY/MOLECULAR GENTETICS (DIRTY) 1046	0.4	1.0					-	-	-	8
9	20	1	PATHOLOGY/MOLECULAR GENTETICS (DIRTY) 1046			0.4	1.0			PATHOLOGY/MOLECULAR GENTETICS (CLEAN) 1045	30	2	10
11	30	2	PATHOLOGY/MOLECULAR GENTETICS (DIRTY) 1046					1.0	1.0	-	-	-	12
13	-	-	-	1.0	1.0					PATHOLOGY/MOLECULAR GENTETICS (CLEAN) 1045	30	2	14
15	30	2	PATHOLOGY/MOLECULAR GENTETICS (DIRTY) 1046			1.0	1.0			-	-	-	16
17	-	-	-					1.0	1.0	PATHOLOGY/MOLECULAR GENTETICS (CLEAN) 1045	30	2	18
19	30	2	PATHOLOGY/MOLECULAR GENTETICS (DIRTY) 1046	1.0	1.0					-	-	-	20
21	-	-	-			1.0	1.1			SUPPORT 1044	20	1	22
23	20	1	PATHOLOGY/MOLECULAR GENTETICS (CLEAN) 1045					0.4	0.4	SUPPORT 1044	20	1	24
25	20	1	PATHOLOGY/MOLECULAR GENTETICS (CLEAN) 1045	0.4	0.2					SUPPORT 1044	20	1	26
27	20	1	PATHOLOGY/MOLECULAR GENTETICS (CLEAN) 1045			0.4	0.2			SUPPORT 1044	20	1	28
29	20	1	PATHOLOGY/MOLECULAR GENTETICS (CLEAN) 1045					0.4	0.2	SUPPORT 1044	20	1	30
31	20	1	PATHOLOGY/MOLECULAR GENTETICS (CLEAN) 1045	0.2	0.4					SUPPORT 1044	20	1	32
33	20	1	PATHOLOGY/MOLECULAR GENTETICS (CLEAN) 1045			0.4	0.4			SUPPORT 1043	20	1	34
35	20	1	PATHOLOGY/MOLECULAR GENTETICS (CLEAN) 1045					0.4	0.4	SUPPORT 1043	20	1	36
37	20	1	PATHOLOGY/MOLECULAR GENTETICS (CLEAN) 1045	0.4	0.4					SUPPORT 1038	20	1	38
39	20	1	PATHOLOGY/MOLECULAR GENTETICS (CLEAN) 1045			0.4	1.0			PATHOLOGY/MOLECULAR GENTETICS (CLEAN) 1045	30	2	40
41	20	1	PATHOLOGY/MOLECULAR GENTETICS (CLEAN) 1045					0.4	1.0	-	30	2	42
43	20	1	PATHOLOGY/MOLECULAR GENTETICS (CLEAN) 1045	0.4	0.0					SPARE	20	1	44
45	30	2	PATHOLOGY/MOLECULAR GENTETICS (CLEAN) 1045			1.0	0.0			SPARE	20	1	46
47	-	-	-					1.0	0.0	SPARE	20	1	48
49	30	2	PATHOLOGY/MOLECULAR GENTETICS (CLEAN) 1045	1.0	0.0					SPARE	20	1	50
51	-	-	-			1.0	0.0			SPARE	20	1	52
53	20	1	SPARE					0.0	0.0	SPARE	20	1	54
TOTAL				10.2		11.7		10.0					

PANEL LP2

LOCATION: SERVICE/ULTILITY CORRIDOR 1041 | VOLT: 208Y/120V, 3Ø, 4W | BUS: 225A
LUG LOCATION: TOP FEED | MAIN BUS: MAIN LUGS ONLY | MOUNTING: SURFACE
PANELBOARD SCCR RATING (A): 10,000

CIRCUIT NO.	BREAKER AMPS	BREAKER POLES	DESCRIPTION	PHASE LOAD (KVA) A		B		C		DESCRIPTION	BREAKER AMPS	BREAKER POLES	CIRCUIT NO.
1	20	1	STORAGE 1002	0.2	0.4					ENTRY LOBBY 1051	20	1	2
3	20	1	SPARE			0.0	0.7			MAIL/ WORK ROOM 1050	20	1	4
5	20	1	CORRIDOR 1061/1052					0.7	0.5	CORRIDOR 1061	20	1	6
7	20	1	OFFICE 1060	0.9	0.9					POST-DOC/TECHNICAL OFFICE 1049	20	1	8
9	20	1	OFFICE 1059			0.9	0.9			BREAK ROOM 1048	20	1	10
11	20	1	OFFICE 1058					0.9	1.0	BREAK ROOM 1048	20	1	12
13	20	1	RESEARCH LEADER 1057	0.9	1.0					CORRIDOR 1052	20	1	14
15	20	1	TECH OFFICE 1055			1.1	1.0			CORRIDOR 1052	20	1	16
17	20	1	TECH OFFICE 1054					1.4	1.1	SERVICE/UTILITY CORRIDOR 1041	20	1	18
19	20	1	TECH OFFICE 1053	1.4	1.0					CORRIDOR 1052	20	1	20
21	30	3	PROGRAM ASSISTANT 1056			1.3	0.4			CORRIDOR 1052	20	1	22
23	30	3	ENTRY LOBBY 1051					0.7	1.2	1043 FUME HOOD	20	2	24
25	30	3	EXTERIOR	0.4	1.2					-	-	-	26
27	20	2	FUME HOOD			1.2	0.7			BREAK ROOM 1048	20	1	28
29	-	-	-					1.2	0.0	SPARE	20	1	30
31	20	2	FUME HOOD	1.2	0.0					SPARE	20	1	32
33	-	-	-			1.2	0.0			SPARE	20	1	34
35	20	1	VAV BOXES					1.0	0.0	SPARE	20	1	36
37	20	1	VAV BOXES	1.0	0.0					SPARE	20	1	38
39	20	1	VAV BOXES			1.0	0.0			SPARE	20	1	40
41	20	1	SPARE					0.0	0.0	SPARE	20	1	42
43	20	1	SPARE	0.0	0.0					SPARE	20	1	44
45	20	1	SPARE			0.0	0.0			SPARE	20	1	46
47	20	1	SPARE					0.0	0.0	SPARE	20	1	48
49	20	1	SPARE	0.0	0.0					SPARE	20	1	50
51	20	1	SPARE			0.0	0.0			SPARE	20	1	52
53	20	1	SPARE					0.0	0.0	SPARE	20	1	54
TOTAL				10.4		10.3		9.8					

PANEL LP3

LOCATION: SERVICE/ULTILITY CORRIDOR 1041 | VOLT: 208Y/120V, 3Ø, 4W | BUS: 225A
LUG LOCATION: TOP FEED | MAIN BUS: MAIN LUGS ONLY | MOUNTING: SURFACE
PANELBOARD SCCR RATING (A): 10,000

CIRCUIT NO.	BREAKER AMPS	BREAKER POLES	DESCRIPTION	PHASE LOAD (KVA) A		B		C		DESCRIPTION	BREAKER AMPS	BREAKER POLES	CIRCUIT NO.
1	20	1	SCOPE 1036	0.4	1.0					PLANT PHYSIOLOGY/SOILS 1031	30	2	2
3	20	1	SCOPE 1036			0.4	1.0			-	-	-	4
5	20	1	PLANT PHYSIOLOGY/SOILS 1031					0.4	1.0	PLANT PHYSIOLOGY/SOILS 1031	30	2	6
7	20	1	PLANT PHYSIOLOGY/SOILS 1031	0.4	1.0					-	-	-	8
9	20	1	PLANT PHYSIOLOGY/SOILS 1031			0.4	1.0			PLANT PHYSIOLOGY/SOILS 1031	30	2	10
11	20	1	PLANT PHYSIOLOGY/SOILS 1031					0.4	1.0	-	-	-	12
13	20	1	PLANT PHYSIOLOGY/SOILS 1031	0.4	1.0					PLANT PHYSIOLOGY/SOILS 1031	30	2	14
15	20	1	PLANT PHYSIOLOGY/SOILS 1031			0.4	1.0			-	-	-	16
17	20	1	PLANT PHYSIOLOGY/SOILS 1031					0.4	1.0	PLANT PHYSIOLOGY/SOILS 1031	30	2	18
19	20	1	PLANT PHYSIOLOGY/SOILS 1031	0.4	1.0					-	-	-	20
21	20	1	PLANT PHYSIOLOGY/SOILS 1031			0.4	1.0			PLANT PHYSIOLOGY/SOILS 1031	30	2	22
23	20	1	PLANT PHYSIOLOGY/SOILS 1031					0.4	1.0	-	-	-	24
25	20	1	PLANT PHYSIOLOGY/SOILS 1031	0.4	1.0					PLANT PHYSIOLOGY/SOILS 1031	30	2	26
27	20	1	PLANT PHYSIOLOGY/SOILS 1031			0.4	1.0			-	-	-	28
29	20	1	PLANT PHYSIOLOGY/SOILS 1031					0.4	1.0	PLANT PHYSIOLOGY/SOILS 1031	30	2	30
31	20	1	PLANT PHYSIOLOGY/SOILS 1031	0.4	1.0					-	-	-	32
33	20	1	PLANT PHYSIOLOGY/SOILS 1031			0.2	1.0			PLANT PHYSIOLOGY/SOILS 1031	30	2	34
35	20	1	PLANT PHYSIOLOGY/SOILS 1031					1.1	1.0	-	-	-	36
37	20	1	PLANT PHYSIOLOGY/SOILS 1031	0.4	1.0					PLANT PHYSIOLOGY/SOILS 1031	30	2	38
39	30	2	PLANT PHYSIOLOGY/SOILS 1031			1.0	1.0			-	-	-	40
41	-	-	-					1.0	0.0	SPARE	20	1	42
43	30	2	PLANT PHYSIOLOGY/SOILS 1031	1.0	0.0					SPARE	20	1	44
45	-	-	-			1.0	0.0			SPARE	20	1	46
47	20	1	SPARE					0.0	0.0	SPARE	20	1	48
49	20	1	SPARE	0.0	0.0					SPARE	20	1	50
51	20	1	SPARE			0.0	0.0			SPARE	20	1	52
53	20	1	SPARE					0.0	0.0	SPARE	20	1	54
TOTAL				10.8		11.3		10.2					

PANEL LP4

LOCATION: SERVICE/ULTILITY CORRIDOR 1041 | VOLT: 208Y/120V, 3Ø, 4W | BUS: 225A
LUG LOCATION: TOP FEED | MAIN BUS: MAIN LUGS ONLY | MOUNTING: SURFACE
PANELBOARD SCCR RATING (A): 10,000

CIRCUIT NO.	BREAKER AMPS	BREAKER POLES	DESCRIPTION	PHASE LOAD (KVA) A		B		C		DESCRIPTION	BREAKER AMPS	BREAKER POLES	CIRCUIT NO.
1	20	1	TECH TRANSFER 1004	1.4	1.4					TECH OFFICE 1021	20	1	2
3	20	1	CEILING MOUNTED PROJECTOR - TECH TRANSFER 1004			0.5	1.3			SERVICE/UTILITY CORRIDOR 1041	20	1	4
5	20	1	PREP 1005					0.9	0.5	CEILING MOUNTED MOTORIZED SCREEN	20	1	6
7	20	1	PREP 1005	1.0	0.9					CAT 3 OFFICE 1023	20	1	8
9	20	1	OFFICE 1012			0.9	0.0			SPARE	20	1	10
11	20	1	JAN 1006					0.2	0.9	TECH OFFICE 1020	20	1	12
13	20	1	OFFICE 1013	0.9	0.5					WOMEN 1009	20	1	14
15	20	1	OFFICE 1014			0.9	0.5			MEN 1010	20	1	16
17	20	1	CORRIDOR 1007					1.1	0.9	CAT 3 OFFICE1024	20	1	18
19	20	1	OFFICE 1015	0.9	0.0					SPARE	20	1	20
21	20	1	TECH OFFICE 1022			1.4	0.4			STORAGE 1028	20	1	22
23	20	1	OFFICE 1017					0.9	0.9	TECHNICIAN OFFICE 1025	20	1	24
25	20	1	SMALL CONF 1018	0.7	0.4					SERVICE/UTILITY CORRIDOR 1041	20	1	26
27	20	1	TECHNICIAN OFFICE 1026			0.9	0.4			SERVICE/UTILITY CORRIDOR 1041	20	1	28
29	20	1	OFFICE 1017					0.9	1.2	SERVICE/UTILITY CORRIDOR 1041	20	3	30
31	20	1	EXTERIOR	0.9	1.2					-	-	-	32
33	40	2	PREP 1005 ELEC. STOVETOP			3.0	1.2			-	-	-	34
35	-	-	-					3.0	0.0	SPARE	20	1	36
37	20	1	PREP 1005	0.4	0.0					SPARE	20	1	38
39	20	1	CORRIDOR 1019			0.5	0.0			SPARE	20	1	40
41	20	1	SUPPORT 1032 RECS.					0.4	0.0	SPARE	20	1	42
43	20	1	SPARE	0.0	0.0					SPARE	20	1	44
45	20	1	SPARE			0.0	0.0			SPARE	20	1	46
47	20	1	SPARE					0.0	0.0	SPARE	20	1	48
49	20	1	SPARE	0.0	0.0					SPARE	20	1	50
51	20	1	SPARE			0.0	0.0			SPARE	20	1	52
53	20	1	SPARE					0.0	0.0	SPARE	20	1	54
TOTAL				10.7		11.9		11.7					

PANEL LP5

LOCATION: SERVICE/ULTILITY CORRIDOR 1041 | VOLT: 208Y/120V, 3Ø, 4W | BUS: 225A
LUG LOCATION: TOP FEED | MAIN BUS: MAIN LUGS ONLY | MOUNTING: SURFACE
PANELBOARD SCCR RATING (A): 10,000

CIRCUIT NO.	BREAKER AMPS	BREAKER POLES	DESCRIPTION	PHASE LOAD (KVA) A		B		C		DESCRIPTION	BREAKER AMPS	BREAKER POLES	CIRCUIT NO.
1	20	1	SUPPORT 1032	0.2	1.2					FUME HOOD	20	2	2
3	20	1	SUPPORT 1032			0.2	1.2			-	-	-	4
5	20	1	SUPPORT 1032					0.2	1.2	FUME HOOD	20	2	6
7	20	1	SUPPORT 1032	0.4	1.2					-	-	-	8
9	20	1	SUPPORT 1033			0.4	1.2			FUME HOOD	20	2	10
11	20	1	SUPPORT 1033					0.4	1.2	-	-	-	12
13	20	1	SUPPORT 1040	0.4	0.5					DRINKING FOUNTAIN	20*	1	14
15	20	1	SUPPORT 1040			0.4	0.5			DRINKING FOUNTAIN	20*	1	16
17	30	2	SHARED EQUIP ROOM 1037					1.0	0.0	SPARE	20	1	18
19	-	-	-	1.0	0.0					SPARE	20	1	20
21	30	2	SHARED EQUIP ROOM 1037			1.0	0.0			SPARE	20	1	22
23	-	-	-					1.0	0.0	SPARE	20	1	24
25	30	2	SHARED EQUIP ROOM 1037	1.0	0.0					SPARE	20	1	26
27	-	-	-			1.0	0.0			SPARE	20	1	28
29	30	2	SHARED EQUIP ROOM 1037					1.0	0.0	SPARE	20	1	30
31	-	-	-	1.0	0.0					SPARE	20	1	32
33	30	2	SHARED EQUIP ROOM 1037			1.0	0.0			SPARE	20	1	34
35	-	-	-					1.0	0.0	SPARE	20	1	36
37	20	1	SHARED EQUIP ROOM 1037	1.2	0.0					SPARE	20	1	38
39	20	1	SPARE			0.0	0.0			SPARE	20	1	40
41	20	1	SPARE					0.0	0.0	SPARE	20	1	42
43	20	1	SPARE	0.0	0.0					SPARE	20	1	44
45	20	1	SPARE			0.0	0.0			SPARE	20	1	46
47	20	1	SPARE					0.0	0.0	SPARE	20	1	48
49	20	1	SPARE	0.0	0.0					SPARE	20	1	50
51	20	1	SPARE			0.0	0.0			SPARE	20	1	52
53	20	1	SPARE					0.0	0.0	SPARE	20	1	54
TOTAL				8.2		6.9		7.1		* GFCI BREAKER			

PANEL LP6

LOCATION: ELECTRICAL ROOM | VOLT: 208Y/120V, 3Ø, 4W | BUS: 225A
LUG LOCATION: TOP FEED | MAIN BUS: MAIN LUGS ONLY | MOUNTING: SURFACE
PANELBOARD SCCR RATING (A): 10,000

CIRCUIT NO.	BREAKER AMPS	BREAKER POLES	DESCRIPTION	PHASE LOAD (KVA) A		B		C		DESCRIPTION	BREAKER AMPS	BREAKER POLES	CIRCUIT NO.
1	30	2	EF-1 (2HP)	1.3	1.2					ODU-1 / IDU-1	15	2	2
3	-	-	-			1.3	1.2			-	-	-	4
5	20	1	BBH-1					1.2	1.2	DI WATER DEDICATED REC.	20	1	6
7	20	1	MECH. 2004 RECS.	1.1	1.2					DI WATER DEDICATED REC.	20	1	8
9	20	1	STORAGE 2007 RECS.			0.4	0.1			2ND FLOOR VAV BOX	20	1	10
11	20	1	SPARE					0.0	0.0	SPARE	20	1	12
13	20	1	UTILITY COORIDOR 2003 RECS.	0.5	0.0					SPARE	20	1	14
15	20	1	ELEC. RM. 2006 RECS.			0.7	0.0			SPARE	20	1	16
17	30	2	SPARE					0.0	0.0	SPARE	20	1	18
19	-	-	SPARE	0.0	0.0					SPARE	20	1	20
21	30	2	SPARE			0.0	0.0			SPARE	20	1	22
23	-	-	SPARE					0.0	0.0	SPARE	20	1	24
25	30	2	SPARE	0.0	0.0					SPARE	20	1	26
27	-	-	SPARE			0.0	0.0			SPARE	20	1	28
29	30	2	SPARE					0.0	0.0	SPARE	20	1	30
31	-	-	SPARE	0.0	0.0					SPD TYPE 2B	30	3	32
33	30	2	SPARE			0.0	0.0			-	-	-	34
35	-	-	SPARE					0.0	0.0	-	-	-	36
TOTAL				5.3		3.7		2.4					

J:\greenwood\2025 Jobs\5825 USDA Sugarcane Research Lab Houma LA\07 Working Folder\Elec\E-701.dwg
May 20, 2026 – 9:05am

THE Johnson McAdams FIRM P.A.
ARCHITECTS/ENGINEERS PLANNING SURVEYING MANAGEMENT
P.O. BOX 513, GREENWOOD, MISSISSIPPI - (662) 455-4943

BRADEN T. DUKE, LICENSED PROFESSIONAL ENGINEER, 35781, STATE OF MISSISSIPPI — 05/20/26

NO.	DATE	BY	DESCRIPTION

REVISIONS

A-E FIRM	USDA
PROJECT MANAGER: REH	EPM: WN
DESIGNER: BTD	PPM: XXX
CHECKED BY: BTD	SAFETY & HEALTH: CM
JOB #: 5825	REAL PROPERTY: JS

USDA Agricultural Research Service

USDA AGRICULTURAL RESEARCH SERVICE
SUGARCANE RESEARCH LABORATOR
HOUMA, LOUISIANA

PANEL SCHEDULES

PROJECT NO.: XXX
DATE: 05/20/2026

AGRICULTURAL RESEARCH SERVICE
FACILITIES ENGINEERING BRANCH
5106 SUNNYSIDE AVENUE
BELTSVILLE, MD 20705-5100

SHEET E-701

PANEL	LOCATION:	2ND FLOOR ELEC. RM.	LUG LOCATION:	TOP FEED													
EHP	VOLT:	480Y/277V, 3Ø, 4W	MAIN BUS:	200A MAIN BREAKER													
	BUS:	200A	MOUNTING:	SURFACE									PANELBOARD SCCR RATING (A):			42,000	

CIRCUIT	BREAKER		DESCRIPTION	PHASE LOAD (KVA)						DESCRIPTION	BREAKER		CIRCUIT
NO.	AMPS	POLES		A		B		C			AMPS	POLES	NO.
1	70	3	XFMR "X-ELPA" / PANEL ELP1 & ELP2	13.5	0.5					EXTERIOR WALL MOUNTED LIGHTS	20	1	2
3	-	-	-			13.6	0.3			EXTERIOR POLE LIGHTS	20	1	4
5	-	-	-					14.1	0.1	EXTERIOR FLAG POLE LIGHTS	20	1	6
7	70	3	SPARE	0.0	1.0					LIGHTS (2ND FLOOR)	20	1	8
9	-	-	-			0.0	1.2			LIGHTS (1ST FLOOR -UTILITY CORRIDOR)	20	1	10
11	-	-	-					0.0	0.7	LIGHTS (WEST OFFICES)	20	1	12
13	30	3	SPARE	0.0	0.7					LIGHTS (NW OFFICES)	20	1	14
15	-	-	-			0.0	0.7			LIGHTS (WEST CORRIDOR)	20	1	16
17	-	-	-					0.0	2.0	LIGHTS (WEST LABS)	20	1	18
19	45	3	SPARE	0.0	1.2					LIGHTS (SCOPE AND RESTROOMS)	20	1	20
21	-	-	-			0.0	1.2			LIGHTS (CONFERENCE ROOM)	20	1	22
23	-	-	-					0.0	0.0	LIGHTS (EAST CORRIDOR)	20	1	24
25	20	1	SPARE	0.0	0.0					LIGHTS (NE OFFICES)	20	1	26
27	20	1	SPARE			0.0	0.0			LIGHTS (EAST OFFICES)	20	1	28
29	20	1	SPARE					0.0	0.0	LIGHTS (EAST LABS)	20	1	30
31	20	1	SPARE	0.0	0.0					SPD TYPE 2B	30	3	32
33	20	1	SPARE			0.0	0.0			-	-	-	34
35	20	1	SPARE					0.0	0.0	-	-	-	36
TOTAL				17.0		17.1		16.8					

PANEL	LOCATION:	2ND FLOOR ELEC. RM.	LUG LOCATION:	TOP FEED													
ELP1	VOLT:	208Y/120V, 3Ø, 4W	MAIN BUS:	100A MAIN BREAKER													
	BUS:	100A	MOUNTING:	SURFACE									PANELBOARD SCCR RATING (A):			10,000	

CIRCUIT	BREAKER		DESCRIPTION	PHASE LOAD (KVA)						DESCRIPTION	BREAKER		CIRCUIT
NO.	AMPS	POLES		A		B		C			AMPS	POLES	NO.
1	20	1	SCOPE 1035	0.2	0.8					ENTRY GATE POWER	20	1	2
3	20	1	PATHOLOGY/MOLECULAR GENTETICS (DIRTY) 1046			0.2	0.5			FACP	20	1	4
5	20	1	PATHOLOGY/MOLECULAR GENTETICS (DIRTY) 1046					0.4	0.5	ACP	20	1	6
7	20	1	PATHOLOGY/MOLECULAR GENTETICS (DIRTY) 1046	0.4	0.4					COMM. 2005 RECS.	20	1	8
9	20	1	PATHOLOGY/MOLECULAR GENTETICS (CLEAN) 1045			0.4	0.4			COMM. 2005 RECS.	20	1	10
11	20	1	PATHOLOGY/MOLECULAR GENTETICS (CLEAN) 1045					0.4	0.5	IDS	20	1	12
13	20	1	PATHOLOGY/MOLECULAR GENTETICS (CLEAN) 1045	0.4	0.5					CCTV	20	1	14
15	20	1	PATHOLOGY/MOLECULAR GENTETICS (CLEAN) 1045			0.4	0.5			LIGHTING CONTACTOR	20	1	16
17	20	1	PATHOLOGY/MOLECULAR GENTETICS (CLEAN) 1045					0.4	1.0	COMM. 2005 UPS REC.	20	2	18
19	20	1	SUPPORT 1044	0.4	1.0					-	-	-	20
21	20	1	SUPPORT 1044			0.2	0.0			SPARE	20	1	22
23	20	1	SUPPORT 1044					0.2	0.0	SPARE	20	1	24
25	20	1	SUPPORT 1044	0.2	0.0					SPARE	20	1	26
27	20	1	SUPPORT 1044			0.4	0.0			SPARE	20	1	28
29	20	1	SUPPORT 1043					0.4	0.0	SPARE	20	1	30
31	20	1	SUPPORT 1043	0.4	0.0					SPARE	20	1	32
33	20	1	SUPPORT 1038			0.4	0.0			SPARE	20	1	34
35	20	1	SERVICE/UTILITY CORRIDOR 1041					0.5	0.0	SPARE	20	1	36
37	30	2	SERVICE/UTILITY CORRIDOR 1041	1.0	0.0					SPARE	20	1	38
39	-	-	-			1.0	0.0			SPARE	20	1	40
41	30	2	SERVICE/UTILITY CORRIDOR 1041					1.0	0.0	SPARE	20	1	42
43	-	-	-	1.0	0.0					SPARE	20	1	44
45	30	2	SERVICE/UTILITY CORRIDOR 1041			1.0	0.0			SPARE	20	1	46
47	-	-	-					1.0	0.0	SPARE	20	1	48
49	30	3	SPD TYPE 2B	0.0	0.0					SPARE	20	1	50
51	-	-	-			0.0	0.0			SPARE	20	1	52
53	-	-	-					0.0	0.0	SPARE	20	1	54
TOTAL				6.5		5.2		6.2					

PANEL	LOCATION:	2ND FLOOR ELEC. RM.	LUG LOCATION:	TOP FEED													
ELP2	VOLT:	208Y/120V, 3Ø, 4W	MAIN BUS:	100A MAIN BREAKER													
	BUS:	100A	MOUNTING:	SURFACE									PANELBOARD SCCR RATING (A):			10,000	

CIRCUIT	BREAKER		DESCRIPTION	PHASE LOAD (KVA)						DESCRIPTION	BREAKER		CIRCUIT
NO.	AMPS	POLES		A		B		C			AMPS	POLES	NO.
1	20	1	SPARE	0.0	0.7					RECS. - UTILITY CORRIDOR	20	1	2
3	20	1	LAB 1031 RECS.			0.4	0.7			RECS. - UTILITY CORRIDOR	20	1	4
5	20	1	LAB 1031 RECS.					0.4	1.2	RECS. - UTILITY CORRIDOR	30	1	6
7	20	1	SPARE	0.0	1.2					-	-	1	8
9	20	1	LAB 1031 RECS.			0.4	1.2			RECS. - UTILITY CORRIDOR	30	1	10
11	20	1	LAB 1031 RECS.					0.4	1.2	-	-	1	12
13	20	1	LAB 1031 RECS.	0.4	1.2					RECS. - UTILITY CORRIDOR	30	2	14
15	20	1	LAB 1031 RECS.			0.4	1.2			-	-	-	16
17	20	1	LAB 1031 RECS.					0.4	0.5	LAB 1031 RECS.	20	1	18
19	20	1	LAB 1031 RECS.	0.4	0.0					SPARE	20	1	20
21	30	2	RECS. - 1037			1.0	0.0			SPARE	20	1	22
23	-	-	-					1.0	0.0	SPARE	20	1	24
25	30	2	RECS. 1037	1.0	0.0					SPARE	20	1	26
27	-	-	-			1.0	0.0			SPARE	20	1	28
29	30	2	RECS. 1037					1.0	0.0	SPARE	20	1	30
31	-	-	-	1.0	0.0					SPARE	20	1	32
33	30	2	RECS. 1037			1.0	0.0			SPARE	20	1	34
35	-	-	-					1.0	0.0	SPARE	20	1	36
37	20	1	RECS. 1040	0.4	0.0					SPARE	20	1	38
39	20	1	RECS - 1033			0.4	0.0			SPARE	20	1	40
41	20	1	RECS - 1033					0.4	0.0	SPARE	20	1	42
43	20	1	RECS. - 1032	0.4	0.0					SPARE	20	1	44
45	20	1	1032 OVERHEAD POWER			0.4	0.0			SPARE	20	1	46
47	20	1	1032 OVERHEAD POWER					0.4	0.0	SPARE	20	1	48
49	20	1	1032 OVERHEAD POWER	0.4	0.0					SPARE	20	1	50
51	20	1	RECS. - 1032			0.4	0.0			SPARE	20	1	52
53	20	1	SPARE					0.0	0.0	SPARE	20	1	54
TOTAL				7.0		8.4		7.8					

Johnson, Mirabo & Adams, Inc. PSM P.A.
ARCHITECTS/ENGINEERS PLANNING SURVEYING MANAGEMENT
P.O. BOX 5-5, GREENWOOD, MISSISSIPPI - (662) 455-4443

NO.	DATE	BY	DESCRIPTION

REVISIONS

USDA Agricultural Research Service

USDA AGRICULTURAL RESEARCH SERVICE
SUGARCANE RESEARCH LABORATORY
HOUMA, LOUISIANA

PANEL SCHEDULES

A-E FIRM	USDA
PROJECT MANAGER	REH
EPM	WN
DESIGNER	BTD
PPM	XXX
CHECKED BY	BTD
SAFETY & HEALTH	CM
JOB #	5825
REAL PROPERTY	JS

PROJECT NO.	XXX
DATE	05/20/2026

AGRICULTURAL RESEARCH SERVICE
FACILITIES ENGINEERING BRANCH
5106 SUNNYSIDE AVENUE
BELTSVILLE, MD 20705-5100

SHEET
E-702
157 OF 176

BRADEN T. DUKE — LICENSED PROFESSIONAL ENGINEER — 05/20/26 — 35781 — STATE OF MISSISSIPPI

J:\Agronomic\2025 Jobs\5825 USDA Sugarcane Research Lab Houma LA\07 Working Folder\Electric\E-701.dwg
May 20, 2026 - 2:05pm

GENERAL NOTES

1. EMERGENCY LIGHTING BATTERY PACKS SHALL BE PROVIDED WITH UNSWITCHED CIRCUIT CONNECTION AHEAD OF ANY LOCAL SWITCHING CONTROLS. VERIFY CONNECTIONS MAINTAIN BATTERY CHARGING AND EMERGENCY OPERATION AT ALL TIMES.
2. COORDINATE ALL LIGHTING FIXTURE LOCATIONS, CEILING-MOUNTED DEVICES, AND CEILING PENETRATIONS WITH ARCHITECTURAL REFLECTED CEILING PLANS, HVAC EQUIPMENT, FIRE PROTECTION SYSTEMS, AND OTHER TRADES PRIOR TO INSTALLATION. ADJUST LOCATIONS AS REQUIRED TO MAINTAIN REQUIRED CLEARANCES.

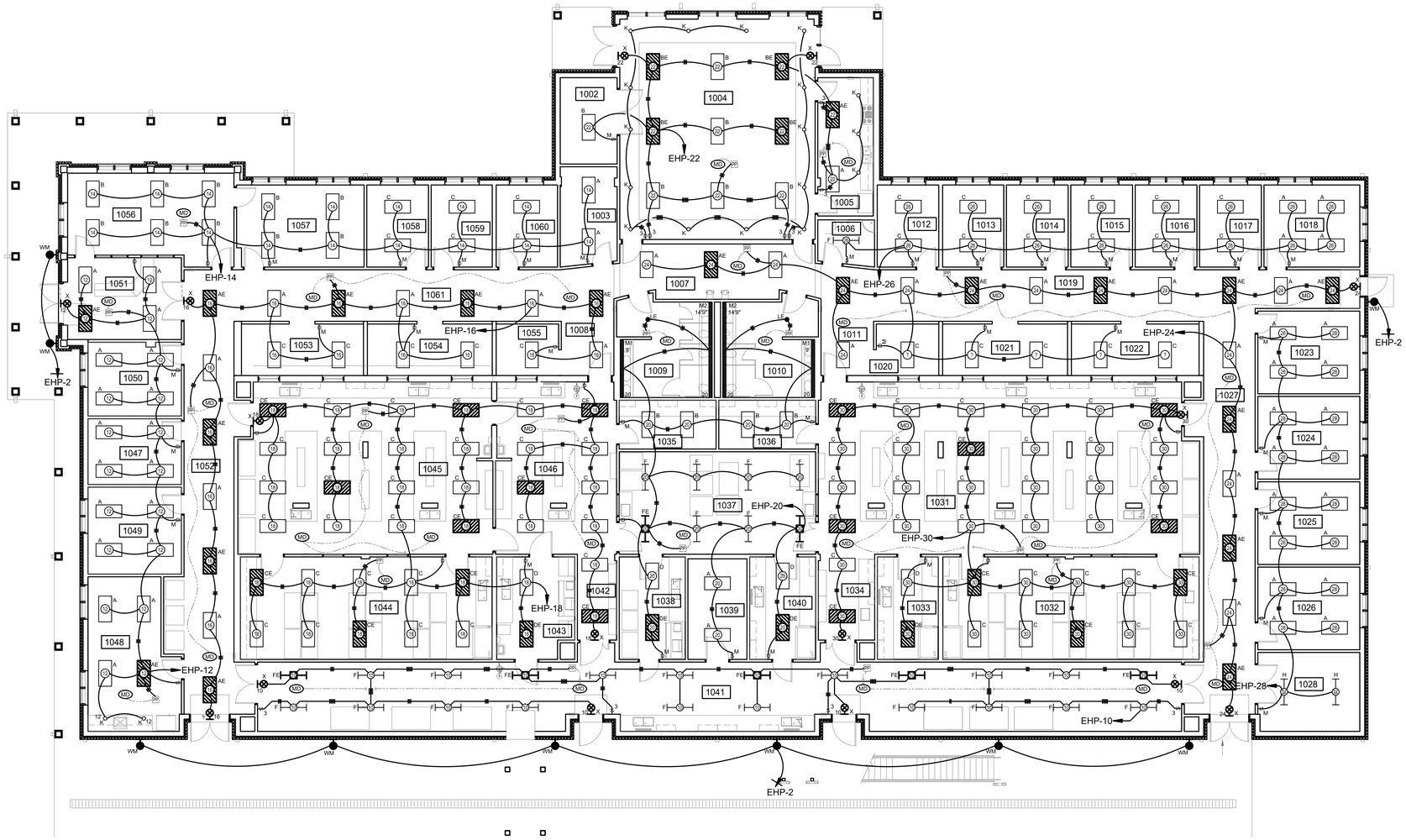

1 EL101 FIRST FLOOR LIGHTING PLAN
SCALE: 1/8"=1'-0"

PLAN NORTH TRUE NORTH

NO.	DATE	BY	DESCRIPTION

REVISIONS

Johnson McAdams

A-E FIRM	USDA
PROJECT MANAGER REH	EPM WN
DESIGNER BTD	PPM XXX
CHECKED BY BTD	SAFETY & HEALTH CM
JOB # 5825	REAL PROPERTY JS

USDA Agricultural Research Service

USDA AGRICULTURAL RESEARCH SERVICE
SUGARCANE RESEARCH LABORATOR
HOUMA, LOUISIANA

FIRST FLOOR LIGHTING PLAN

PROJECT NO. XXX
DATE 05/20/2026

AGRICULTURAL RESEARCH SERVICE
FACILITIES ENGINEERING BRANCH
5106 SUNNYSIDE AVENUE
BELTSVILLE, MD 20705-5100

SHEET EL101
158 OF 176

J:\greenwood\2025 Jobs\5825 USDA Sugarcane Research Lab Houma LA\07 Working Folder\Elec\EL101.dwg
May 20, 2026 - 9:05am

GENERAL NOTES

1. EMERGENCY LIGHTING BATTERY PACKS SHALL BE PROVIDED WITH UNSWITCHED CIRCUIT CONNECTION AHEAD OF ANY LOCAL SWITCHING CONTROLS. VERIFY CONNECTIONS MAINTAIN BATTERY CHARGING AND EMERGENCY OPERATION AT ALL TIMES.
2. COORDINATE ALL LIGHTING FIXTURE LOCATIONS, CEILING-MOUNTED DEVICES, AND CEILING PENETRATIONS WITH ARCHITECTURAL REFLECTED CEILING PLANS, HVAC EQUIPMENT, FIRE PROTECTION SYSTEMS, AND OTHER TRADES PRIOR TO INSTALLATION. ADJUST LOCATIONS AS REQUIRED TO MAINTAIN REQUIRED CLEARANCES.

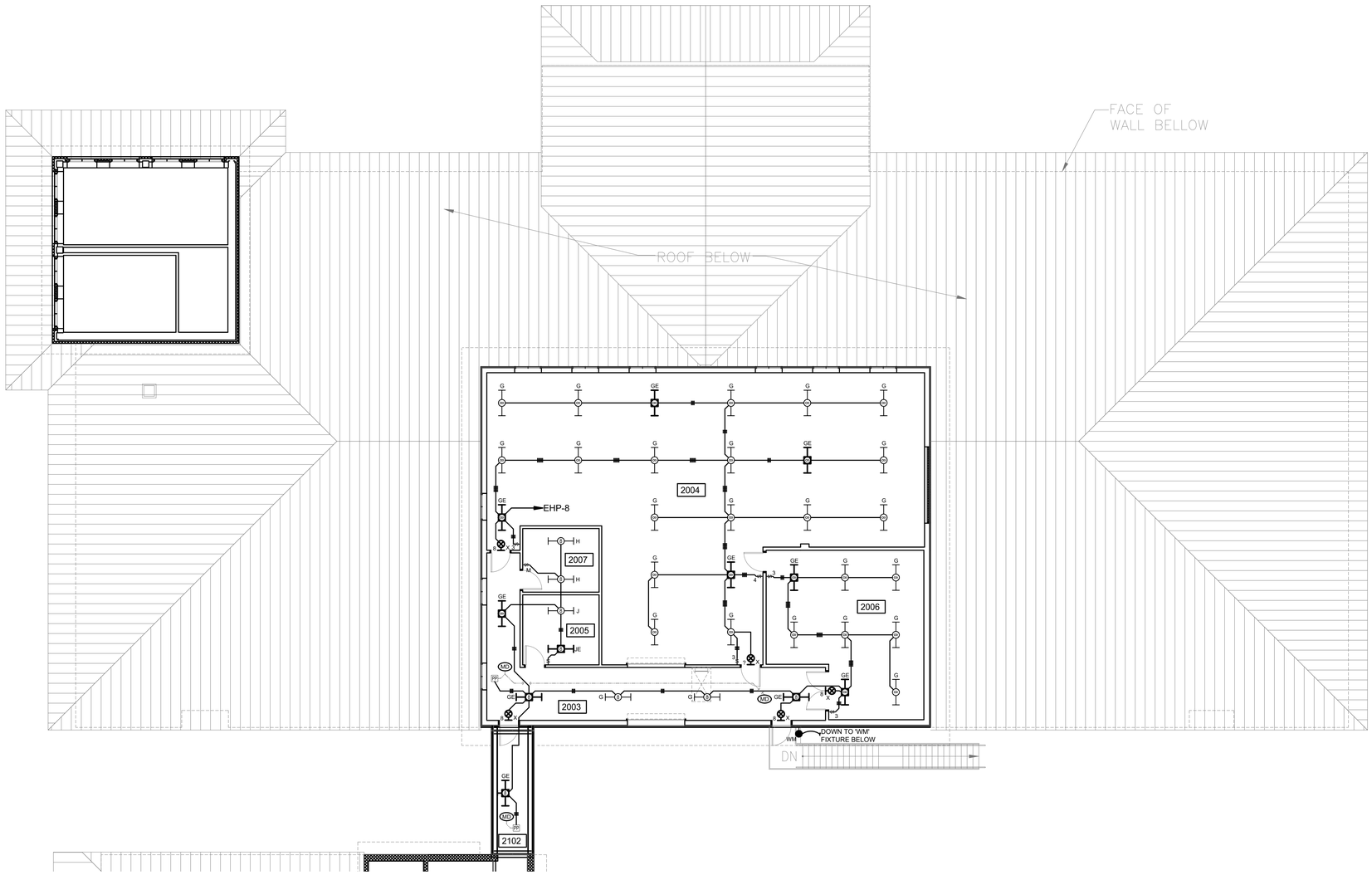

1 EL102 SECOND FLOOR LIGHTING PLAN
SCALE: 1/8"=1'-0"

PLAN NORTH TRUE NORTH

NO.	DATE	BY	DESCRIPTION

REVISIONS

A-E FIRM	USDA
PROJECT MANAGER REH	EPM WN
DESIGNER BTD	PPM XXX
CHECKED BY BTD	SAFETY & HEALTH CM
JOB # 5825	REAL PROPERTY JS

USDA Agricultural Research Service

USDA AGRICULTURAL RESEARCH SERVICE
SUGARCANE RESEARCH LABORATOR
HOUMA, LOUISIANA

SECOND FLOOR LIGHTING PLAN

PROJECT NO. XXX
DATE 05/20/2026

AGRICULTURAL RESEARCH SERVICE
FACILITIES ENGINEERING BRANCH
5106 SUNNYSIDE AVENUE
BELTSVILLE, MD 20705-5100

SHEET EL102
159 OF 176

J:\greenwood\2025 Jobs\5825 USDA Sugarcane Research Lab Houma LA\07 Working Folder\Elec\EL101.dwg
May 20, 2026 - 9:05am

LIGHTING FIXTURE SCHEDULE

TYPE	MANUFACTURER	PART NUMBER	LAMPS	MOUNTING	REMARKS
A	LITHONIA	EPANL-2x4-3000LM-80CRI-40K-MIN1-ZT-MVOLT	29W LED 3,266 LUMENS	RECESSED GRID	LED EDGE-LIT 2x4 FLAT PANEL
AE	LITHONIA	EPANL-2x4-3000LM-80CRI-40K-MIN1-ZT-MVOLT-E10WCP	29W LED 3,266 LUMENS	RECESSED GRID	LED EDGE-LIT 2x4 FLAT PANEL W/ 277V EMERGENCY BATTERY PACK
B	LITHONIA	EPANL-2x4-4000LM-80CRI-40K-MIN1-ZT-MVOLT	38W LED 4,240 LUMENS	RECESSED GRID	LED EDGE-LIT 2x4 FLAT PANEL
BE	LITHONIA	EPANL-2x4-4000LM-80CRI-40K-MIN1-ZT-MVOLT-E10WCP	38W LED 4,240 LUMENS	RECESSED GRID	LED EDGE-LIT 2x4 FLAT PANEL W/ 277V EMERGENCY BATTERY PACK
C	LITHONIA	EPANL-2x4-4800LM-80CRI-40K-MIN1-ZT-MVOLT	45W LED 5,119 LUMENS	RECESSED GRID	LED EDGE-LIT 2x4 FLAT PANEL
CE	LITHONIA	EPANL-2x4-4800LM-80CRI-40K-MIN1-ZT-MVOLT-E10WCP	45W LED 5,119 LUMENS	RECESSED GRID	LED EDGE-LIT 2x4 FLAT PANEL W/ 277V EMERGENCY BATTERY PACK
CS	LITHONIA	EPANL-2x4-4800LM-80CRI-40K-MIN1-ZT-MVOLT-DGA24	45W LED 5,119 LUMENS	RECESSED GRID	LED EDGE-LIT 2x4 FLAT PANEL W/ DRYWALL GRID ADAPTER
CSE	LITHONIA	EPANL-2x4-4800LM-80CRI-40K-MIN1-ZT-MVOLT-E10WCP-DGA24	45W LED 5,119 LUMENS	RECESSED GRID	LED EDGE-LIT 2x4 FLAT PANEL W/ DRYWALL GRID ADAPTER W/ 277V EMERGENCY BATTERY PACK
D	LITHONIA	EPANL-2x4-6000LM-80CRI-40K-MIN1-ZT-MVOLT	50W LED 6,548 LUMENS	RECESSED GRID	LED EDGE-LIT 2x4 FLAT PANEL
DE	LITHONIA	EPANL-2x4-6000LM-80CRI-40K-MIN1-ZT-MVOLT-E10WCP	50W LED 6,548 LUMENS	RECESSED GRID	LED EDGE-LIT 2x4 FLAT PANEL W/ 277V EMERGENCY BATTERY PACK
F	LITHONIA	FEM-L48-6000LM-IMAFD-MD-MVOLT-GZ10-40K-80CRI-BAA	39W LED 6,629 LUMENS	SURFACE	4' LED LOW-PROFILE ENCLOSED AND GASKETED
FE	LITHONIA	FEM-L48-6000LM-IMAFD-MD-MVOLT-GZ10-40K-80CRI-BAA-E10WMCP	39W LED 6,629 LUMENS	SURFACE	4' LED LOW-PROFILE ENCLOSED AND GASKETED W/ 277V EMERGENCY BATTERY PACK
G	LITHONIA	FEM-L48-8000LM-IMAFD-MD-MVOLT-GZ10-40K-80CRI-BAA	51W LED 8,682 LUMENS	SURFACE	4' LED LOW-PROFILE ENCLOSED AND GASKETED
GE	LITHONIA	FEM-L48-8000LM-IMAFD-MD-MVOLT-GZ10-40K-80CRI-BAA-E10WMCP	51W LED 8,682 LUMENS	SURFACE	4' LED LOW-PROFILE ENCLOSED AND GASKETED W/ 277V EMERGENCY BATTERY PACK
H	LITHONIA	ZL1D-L48-5000LM-FST-MVOLT-40K-80CRI-WH	41W LED 5,541 LUMENS	SURFACE	4' LED STRIP
JE	LITHONIA	ZL1D-L48-7000LM-FST-MVOLT-40K-80CRI-WH-E10W	59W LED 7,596 LUMENS	SURFACE	4' LED STRIP W/ 277V EMERGENCY BATTERY PACK
K	LITHONIA	LDN4-40/10-L04-AR-LD-TRW-MVOLT-GZ1-BAA	11W LED 1,045 LUMENS	RECESSED	4" LED DOWNLIGHT
LE	LITHONIA	LDN4-40/15-L04-AR-LD-TRW-MVOLT-GZ1-BAA-E10WCP	18W LED 1,512 LUMENS	RECESSED	4" LED DOWNLIGHT W/ 277V EMERGENCY BATTERY PACK
M1	FOCAL POINT	FSM4PR-ALH-AF1-625LF-40K-IC-UNV-L11-G-WH-9FT	15W/ 4 FT OF RUN 625 LUMENS/FT	RECESSED	LED PERIMETER LIGHTING VERIFY EXACT LENGTH OF FIXTURE PRIOR TO ROUGH-IN.
M2	FOCAL POINT	FSM4PR-ALH-AF1-375LF-40K-IC-UNV-L11-G-WH-14FT9IN	15W/ 4 FT OF RUN 375 LUMENS/FT	RECESSED	LED PERIMETER LIGHTING VERIFY EXACT LENGTH OF FIXTURE PRIOR TO ROUGH-IN.
WM	LITHONIA	WDGE1-LED-P1-30K-VW-80CRI-MVOLT-SRM-E4WH-DDBXD	10W LED 1,229 LUMENS	WALL @ 8'	COORDINATE MOUNTING HEIGHT WITH ARCHITECT PRIOR TO ROUGH-IN.
X	LITHONIA	LQM-S-W-RG-MVOLT-EL-SD-BAA BAA	3W LED	UNIVERSAL	LED EXIT SIGN WITH EM. BATT. PACK AND SELF DIAGNOSTICS
S4	LITHONIA	RSX1-LED-P1-30K-R4-MVOLT-SPA-HS-DDBXD-BAA	51W LED 7189 LUMENS	POLE @ 25'	POLE: SSS-25-5C-DM19AS-BAA-DDBXD
SG	HYDREL	SAF7-LED-P1-80CRI-40K-MVOLT-70DEG-CWL-KM-CPM	33W LED 2779 LUMENS	GROUND KNUCKLE	COORDINATE FIXTURE ORIENTATION/ANGLE TO ILLUMINATE FLAG POLE

FIXTURE SCHEDULE NOTES:

A. VERIFY ALL FINISH COLORS WITH CONTRACTING OFFICER PRIOR TO SUBMITTING EQUIPMENT BROCHURES.

B. VERIFY CEILING TYPES WITH ARCHITECTURAL DRAWING AND PROVIDE THE NECESSARY HARDWARE TO MOUNT THE FIXTURE IN THE CEILING TYPE BEING INSTALLED.

C. VERIFY MOUNTING HEIGHT OF FIXTURES WITH ARCHITECTURAL DRAWINGS PRIOR TO SUBMITTING EQUIPMENT BROCHURES. IF NO HEIGHT IS SHOWN ON THE ARCHITECTURAL DRAWINGS, VERIFY HEIGHT WITH THE CONTRACTING OFFICER PRIOR TO SUBMITTING EQUIPMENT BROCHURES.

LIGHTING CONTROLS MATRIX

NAME	RM #	CONTROLS
STORAGE	1002	LC3
STORAGE	1003	LC3
TECH TRANSFER	1004	LC8
PREP	1005	LC2
JANITOR	1006	LC3
CORRIDOR	1007	LC1
CORRIDOR	1008	LC1
WOMEN'S RESTROOM	1009	LC1
MEN'S RESTROOM	1010	LC1
CORRIDOR	1011	LC1
OFFICE	1012	LC5
OFFICE	1013	LC5
OFFICE	1014	LC5
OFFICE	1015	LC5
OFFICE	1016	LC5
OFFICE	1017	LC5
SMALL CONFERENCE	1018	LC5
CORRIDOR	1019	LC1
TECH OFFICE	1020	LC6
TECH OFFICE	1021	LC6
TECH OFFICE	1022	LC6
CAT 3 OFFICE	1023	LC5
CAT 3 OFFICE	1024	LC5
TECHNICIAN OFFICE	1025	LC5
TECHNICIAN OFFICE	1026	LC5
CORRIDOR	1027	LC1
STORAGE	1028	LC3
PLANT PHYSIOLOGY/SOILS LAB	1031	LC7
SUPPORT	1032	LC7
SUPPORT	1033	LC7
SCOPE	1035	LC7
SCOPE	1036	LC7
SHARED EQUIPMENT ROOM	1037	LC7
SUPPORT	1038	LC7
STORAGE	1039	LC3
SUPPORT	1040	LC7
SERVICE/UTILITY CORRIDOR	1041	LC3
SUPPORT	1043	LC7
SUPPORT	1044	LC7
PATHOLOGY/MOLECULAR GENETICS LAB (CLEAN)	1045	LC7
PATHOLOGY/MOLECULAR GENETICS LAB (DIRTY)	1046	LC7

LIGHTING CONTROLS MATRIX - CONT.

NAME	RM #	CONTROLS
FILES	1047	LC5
BREAK ROOM	1048	LC2
POST-DOC/TECHNICAL OFFICE	1049	LC5
MAIL/WORK ROOM	1050	LC5
ENTRY LOBBY	1051	LC5
CORRIDOR	1052	LC1
TECH OFFICE	1053	LC6
TECH OFFICE	1054	LC6
TECH OFFICE	1055	LC6
PROGRAM ASSISTANT	1056	LC5
RESEARCH LEADER	1057	LC5
OFFICE	1058	LC5
OFFICE	1059	LC5
OFFICE	1060	LC5
CORRIDOR	1061	LC1
SERVICE/UTILITY CORRIDOR	2003	LC1
MECHANICAL PENTHOUSE	2004	LC4
COMMUNICATION ROOM	2005	LC4
ELECTRICAL ROOM	2006	LC4
STORAGE	2007	LC3

LIGHTING CONTROLS LEGEND:

NOTES: OCCUPANCY SENSORS & LOCAL CONTROLS SHOWN ON THE DRAWINGS ARE PROVIDED TO SHOW THE GENERAL SCOPE OF WORK. THIS SCOPE INCLUDES THE ABSOLUTE MINIMUM COMPONENTS REQUIRED. ACTUAL SYSTEM COMPONENTS, QUANTITIES, AND LOCATIONS SHALL BE DETERMINED BY THE LIGHTING CONTROLS VENDOR AND PROVIDED TO THE CONTRACTOR VIA INSTALLATION SHOP DRAWINGS.

LC1 NO LOCAL SWITCH REQUIRED. OCCUPANCY SENSOR SHALL AUTOMATICALLY TURN LIGHTS ON TO 100% WHEN MOTION IS DETECTED IN THE SPACE. OCCUPANCY SENSORS SHALL TURN LIGHTS OFF AFTER 20 MINUTES OF VACANCY.

LC2 MANUAL ON/OFF LOCAL SWITCH SHALL TURN LIGHTS ON TO 100% AND FULL OFF. OCCUPANCY SENSORS SHALL TURN LIGHTS OFF AFTER 20 MINUTES OF VACANCY.

LC3 MANUAL ON/OFF LOCAL SWITCH SHALL TURN LIGHTS ON TO 100% AND FULL OFF. OCCUPANCY SENSOR SHALL AUTOMATICALLY TURN LIGHTS ON TO 100% WHEN MOTION IS DETECTED IN THE SPACE. OCCUPANCY SENSORS SHALL TURN LIGHTS OFF AFTER 20 MINUTES OF VACANCY.

LC4 MANUAL ON/OFF SWITCH SHALL TURN LIGHTS ON TO 100% AND FULL OFF.

LC5 MANUAL ON/OFF LOCAL WALLBOX DIMMER SHALL TURN LIGHTS ON TO 100% AND FULL OFF. OCCUPANCY SENSORS SHALL TURN LIGHTS OFF AFTER 20 MINUTES OF VACANCY. AUTOMATIC RESPONSIVE DAYLIGHT DIMMING WHEN DAYLIGHT IS PRESENT.

LC6 LOCAL WALLBOX DIMMER SHALL TURN LIGHTS ON TO 100% AND FULL OFF. OCCUPANCY SENSORS SHALL TURN LIGHTS ON TO 50% WHEN MOTION IS DETECTED IN THIS SPACE. OCCUPANCY SENSORS SHALL TURN LIGHTS OFF AFTER 20 MINUTES OF VACANCY.

LC7 OCCUPANCY SENSORS SHALL TURN LIGHTS ON TO 100% WHEN MOTION IS DETECTED IN THIS SPACE. OCCUPANCY SENSORS SHALL TURN LIGHTS OFF AFTER 20 MINUTES OF VACANCY. WALLBOX DIMMER SHALL PROVIDE LOCAL ON/OFF AND DIMMING CONTROL.

LC8 (2) WALLBOX DIMMERS FOR EACH FIXTURE TYPE SHALL TURN LIGHTS ON TO 100% AND FULL OFF. OCCUPANCY SENSORS SHALL TURN LIGHTS OFF AFTER 20 MINUTES OF VACANCY.

NOTE: FOR CLAIRITY, 0-10V DIMMING CIRCUITRY HAS NOT BEEN SHOWN. ALL 0-10V CONTROL WIRING SHALL BE 2/C #18 STRANDED, UNSHIELDED 300V PLENUM RATED CABLE.

1 EL501 TYPICAL DIMMER/WALL SENSOR SWITCH DETAIL
SCALE: NONE

2 EL501 TYPICAL CEILING MOUNTED OCCUPANCY SENSOR WITH DIMMING
SCALE: NONE

3 EL501 TYPICAL CEILING MOUNTED OCCUPANCY SENSOR ON/OFF
SCALE: NONE

THE Johnson McAdams FIRM P.A.
ARCHITECTS/ENGINEERS PLANNING SURVEYING MANAGEMENT
P.O. BOX 513, GREENWOOD, MISSISSIPPI - (662) 455-4943

NO.	DATE	BY	DESCRIPTION

REVISIONS

A-E FIRM	USDA
PROJECT MANAGER REH	EPM WN
DESIGNER BTD	PPM XXX
CHECKED BY BTD	SAFETY & HEALTH CM
JOB # 5825	REAL PROPERTY JS

BRADEN T. DUKE LICENSED PROFESSIONAL ENGINEER 35781 STATE OF MISSISSIPPI 05/20/26

USDA Agricultural Research Service

USDA AGRICULTURAL RESEARCH SERVICE
SUGARCANE RESEARCH LABORATOR
HOUMA, LOUISIANA

LIGHTING SCHEDULES & DETAILS

PROJECT NO. XXX
DATE 05/20/2026

AGRICULTURAL RESEARCH SERVICE
FACILITIES ENGINEERING BRANCH
5106 SUNNYSIDE AVENUE
BELTSVILLE, MD 20705-5100

SHEET EL501
160 OF 176

J:\greenwood\2025 Jobs\5825 USDA Sugarcane Research Lab Houma LA\07 Working Folder\Elec\EL501.dwg
May 20, 2026 - 9:05am

LUMINAIRE REQUIREMENTS:

1. HOUSING - ALUMINUM FRAME, LOW PROFILE, SATIN WHITE LENS, PMMA LIGHT GUIDE PLATE. 2FT x 4FT.
2. LIGHT SOURCE - 4000K COLOR TEMPERATURE WITH A MINIMUM CRI OF 80.
   - TYPE "A" & "AE" FIXTURE WITH A 7,200 LUMEN PACKAGE
   - TYPE "B" & "BE" FIXTURE WITH A 4,800 LUMEN PACKAGE
   - TYPE "C", "CF", "CFE", & "CE" FIXTURE WITH A 4,000 LUMEN PACKAGE
3. DRIVER - OPERATING VOLTAGE OF 120-277V. DIMMABLE TO 10%. (0-10 VOLT DIMMING)
4. CERTIFICATION - CSA CERTIFIED TO U.S. STANDARDS. TESTED TO UL1598. INTENDED FOR INDOOR USE ONLY.
5. MOUNTING - RECESSED IN SUSPENDED ACOUSTICAL.
6. THIS SKETCH IS A NON-PROPRIETARY GRAPHIC REPRESENTATION OF A LUMINAIRE THAT MAY MEET THE SPECIFICATION REQUIREMENTS. IT IS NOT INTENDED TO INDICATE A CERTAIN MANUFACTURER OR PREFERENCE.
7. OPTIONS - VARIOUS LUMEN OUTPUT RATINGS AS INDICATED.
8. EMERGENCY PACK - FIXTURES "AE", "BE", CFE, AND "CE" SHALL HAVE AN EMERGENCY SELF-DIAGNOSTIC BATTERY PACK, 10W CONSTANT POWER, CERTIFIED IN CA TITLE 20 MAEDBS.
9. NOM. DIMENSIONS: (L=47.72" X W=23.7" X D=2.19")
10. TYPE CFE - PROVIDE A DRYWALL ADAPTER KIT.

2' X 4' LED VOLUMETRIC TROFFER	
LEGEND:	FIXTURE TYPE: A, AE, B, BE, C, CE, CS, CSE, D, DE

LUMINAIRE REQUIREMENTS:

1. HOUSING - ONE-PIECE 5VA FIBERGLASS HOUSING WITH INTERGRAL PERIMETER CHANNEL UTILIZING CONTINUOUS POURED-IN-PLACE NEMA 4X GASKET. APPROVED FOR THROUGH WIRING. CAPTIVE POLYMERIC LATCHES. FROSTED ,LOW PROFILE, POLYCARBONATE LENSE.
2. LIGHT SOURCE - 4000K COLOR TEMPERATURE, MINIMUM EFFICACY OF 100 LUMENS/WATT, WITH A MINIMUM CRI OF 80.
   - TYPE "F" FIXTURE WITH A 6,000 LUMEN PACKAGE.
   - TYPE "G" FIXTURE WITH A 8,000 LUMEN PACKAGE.
3. DRIVER - OPERATING VOLTAGE OF 120-277V. DIMMABLE TO 10%. (0-10 VOLT DIMMING)
4. CERTIFICATION - CSA CERTIFIED TO UL STANDARDS. SUITABLE FOR WET LOCATION. IP65, IP66, IP67 RATED. NSF SPLASH ZONE 2 AND NON-FOOD RATED. NEMA 4X RATED.
5. MOUNTING - SURFACE MOUNT.
6. THIS SKETCH IS A NON-PROPRIETARY GRAPHIC REPRESENTATION OF A LUMINAIRE THAT MAY MEET THE SPECIFICATION REQUIREMENTS. IT IS NOT INTENDED TO INDICATE A CERTAIN MANUFACTURER OR PREFERENCE.
7. EMERGENCY PACK - FIXTURES "FE" & "GE" SHALL HAVE AN EMERGENCY SELF-DIAGNOSTIC BATTERY PACK, 10W CONSTANT POWER, CERTIFIED IN CA TITLE 20.

4' LED GASKETED STRIP FIXTURE	
LEGEND:	FIXTURE TYPE: F, FE, G, GE

LUMINAIRE REQUIREMENTS:

1. HOUSING - COMPACT-DESIGN CHANNEL AND COVE ARE FORMED FROM CODE COMPLIANT, 22 GAUGE COLD-ROLLED STEEL.
2. LIGHT SOURCE - 4000K COLOR TEMPERATURE WITH A MINIMUM CRI OF 80.
   - TYPE "H" FIXTURE WITH A 5,000 LUMEN PACKAGE
   - TYPE "JE" FIXTURE WITH A 7,000 LUMEN PACKAGE
3. DRIVER - OPERATING VOLTAGE OF 120-277V. DIMMABLE TO 10%. (0-10 VOLT DIMMING)
4. CERTIFICATION - CSA CERTIFIED TO U.S. STANDARDS. LISTED SUITABLE FOR DAMP LOCATIONS. OPERATING TEMPERATURE OF 104F.
5. MOUNTING - SURFACE MOUNTED ABOVE MIRROR.
6. THIS SKETCH IS A NON-PROPRIETARY GRAPHIC REPRESENTATION OF A LUMINAIRE THAT MAY MEET THE SPECIFICATION REQUIREMENTS. IT IS NOT INTENDED TO INDICATE A CERTAIN MANUFACTURER OR PREFERENCE.
7. NOM. DIMENSIONS: (L=48" X W=2.62" X D=2.22")
8. EMERGENCY BATTERY PACK WITH SELF-DIAGNOSTIC TESTING FEATURE AND 90 MINUTES BATTERY PACK FOR FIXTURE TYPE "JE".

4' LED STRIP FIXTURE	
LEGEND:	FIXTURE TYPE: H, JE

LUMINAIRE REQUIREMENTS:

1. HOUSING - DIE-FORMED, COLD-ROLLED STEEL, OR FORGED ALUMINUM WITH HEAT SINK. DRIVER MUST BE ACCESSIBLE FROM BOTTOM OF LUMINAIRE. PROVIDE T-BAR HANGERS FOR INSTALLATION IN ACOUSTICAL TILE CEILINGS OR TABS WHEN MOUNTING IN HARD CEILINGS.
2. REFLECTOR AND TRIM - SPECIFICATION GRADE, LOW IRRIDESCENT, SPECULAR ALUMINUM REFLECTOR WITH METALLIC OR PAINTED TRIM RING.
3. LIGHT SOURCE - SOLID STATE LEDS WITH MINIMUM 50K HOURS RATED LIFE AT L70, 4000K CCT UON, MINIMUM 80 CRI, BINNED TO A 3-STEP SDCM, AND MINIMUM EFFICACY OF 90 LUMENS/WATT.
   - TYPE "K" FIXTURE WITH A 1,000 LUMEN PACKAGE
   - TYPE "LE" FIXTURE WITH A 1,500 LUMEN PACKAGE
4. DRIVER - REPLACEABLE, INTEGRAL, HIGH-EFFICIENCY DRIVER, OPERATING VOLTAGE OF 120-277V, ON-OFF CONTROL, DIMMABLE TO 10% (0-10 VOLT DIMMING).
5. CERTIFICATION - UL 1598, DAMP LOCATION, DLC QUALIFIED, AND ROHS COMPLIANT. COMPLIES WITH LM79, LM80 AND TM21 TESTING STANDARDS. UL 924 WHEN EQUIPPED WITH EMERGENCY BATTERY BACK-UP.
6. MOUNTING - RECESSED IN HARD OR ACOUSTICAL TILE CEILING.
7. OPTIONS - IC RATED FOR DIRECT CONTACT WITH INSULATION, VARIOUS APERTURE DIAMETERS, AND VARIOUS GLASS LENSES.
8. EMERGENCY BATTERY PACK WITH SELF-DIAGNOSTIC TESTING FEATURE AND 90 MINUTES BATTERY PACK FOR FIXTURE TYPE "LE".

4" ROUND LED RECESSED DOWNLIGHT	
LEGEND: ○ ●	FIXTURE TYPE: K, LE

LUMINAIRE REQUIREMENTS:

1. HOUSING - ONE PIECE EXTRUDED ALUMINUM HOUSING. 20 GA. STEEL END CAPS, BULKHEADS, & SLIDING SLEEVE.
2. FINISH - POLYESTER POWDER COAT APPLIED OVER A MULTI-STAGE PRE–TREATMENT.
3. LIGHT SOURCE - SOLID STATE LED WITH MINIMUM 50K HOURS RATED AT L70, 4000K CCT, MINIMUM 80 CRI. MINIMUM EFFICACY OF 100 LUMENS/WATT. 1" REGRESSED LENS.
4. DRIVER - REPLACEABLE, INTEGRAL, HIGH-EFFICIENCY DRIVER WITH MINIMUM 0.9PF, OPERATIBG VOLTAGE OF 120-277V, THERMAL MANAGEMENT.
5. CERTIFICATION - UL 1598, DLC QUALIFIED, AND ROHS COMPLIANT. COMPLIES WITH LM79, LM80 AND TM21 TESTING STANDARDS. UL 924 WHEN EQUIPPED WITH EMERGENCY BATTERY BACK-UP. IC RATED WHEN INDICATED.
6. MOUNTING - RECESSED IN SUSPENDED ACOUSTIC TILE OR HARD CEILING.
7. THIS SKETCH IS A NON-PROPRIETARY GRAPHIC REPRESENTATION OF A LUMINAIRE THAT MAY MEET THE SPECIFICATION REQUIREMENTS. IT IS NOT INTENDED TO INDICATE A CERTAIN MANUFACTURER OR PREFERENCE.
8. OPTIONS - VARIOUS LUMEN PACKAGES AS INDICATED.

LED PERIMETER FIXTURE	
LEGEND:	FIXTURE TYPE: M1, M2

LUMINAIRE REQUIREMENTS:

1. HOUSING - DIE-CAST ALUMINUM OR DIE-CAST AND EXTRUDED ALUMINUM WITH INTEGRAL, SELF-CLEANING HEAT SINK FINS, RIBS, OR EQUIVALENT PASSIVE COOLING MECHANISM. HEAT SINK SHALL BE INCORPORATED DIRECTLY INTO HOUSING TO ENSURE MAXIMUM HEAT TRANSFER AND DISSIPATION.
2. FINISH - EXTERIOR PARTS ARE PROTECTED BY A ZINC-INFUSED SUPER DURABLE TGIC THERMOSET POWDER COAT FINISH THAT PROVIDES SUPERIOR RESISTANCE TO CORROSION AND WEATHERING. A TIGHTLY CONTROLLED MULTI-STAGE PROCESS ENSURES SUPERIOR ADHESION AS WELL AS A MINIMUM FINISH THICKNESS OF 3 MILS. THE RESULT IS A HIGH-QUALITY FINISH THAT IS WARRANTIED NOT TO CRACK OR PEEL. FINISH COLOR DARK BRONZE.
3. POWER SUPPLY/LED DRIVER - PROVIDE IN SEPARATE COMPARTMENT ACCESSIBLE WITHOUT THE USE OF HAND TOOLS. CLASS 1 DRIVER SHALL OPERATE AT 120/277V, 50/60 HZ POWER FACTOR GREATER THAN 0.9 AND THD LESS THAN 20% AT FULL LOAD. MINIMUM EFFICACY SHALL BE 131 LM/W.
4. LED OPTICAL ASSEMBLY - PRECISION ACRYLIC REFRACTIVE LENSES ARE ENGINEERED FOR SUPERIOR APPLICATION EFFICIENCY, DISTRIBUTING THE LIGHT TO WHERE IT IS NEEDED MOST. AVAILABLE IN SHORT AND WIDE PATTERN DISTRIBUTIONS INCLUDING TYPE 2, TYPE 3, TYPE 3S, TYPE 4, TYPE 4S, TYPE 5, TYPE 5S, AFR (AUTOMOTIVE FRONT ROW) AND AFR ROTATED AFRR90 AND ARFL90. MINIMUM COLOR RENDERING INDEX (CRI) SHALL BE 80 FOR CORRELATED COLOR TEMPERATURE (CCT) OF 4000 K TO 4500 DEGREES K.

LEGEND:	FIXTURE TYPE: S4

LUMINAIRE REQUIREMENTS:

1. HOUSING - DIE-CAST ALUMINUM CONSTRUCTION - COMPACT HOUSING. FULLY OVERLAPPING LIGHT SEAL TO PREVENT LIGHT LEAKS. UNIVERSAL DIRECTIONAL CHEVRON KNOCKOUTS.
   - X1 - SINGLE SIDED CHEVRON SIGN.
   - X2 - DOUBLE SIDED CHEVRON SIGN.
2. LIGHT SOURCE - LED'S MOUNTED ON PRINTED CIRCUIT BOARD. 10 YEARS WARRANTY.
3. LETTERS/CHEVRONS - MINIMUM 6" HIGH WITH 3/4" STROKE. GREEN LETTERS AS INDICATED. PROVIDE CHEVRONS AS INDICATED EITHER LEFT, RIGHT OR BOTH DIRECTIONS AS INDICATED. CHEVRONS PUNCHED OUT THROUGH HOUSING AS REQUIRED.
4. EMERGENCY PACK - SOLID-STATE, CONSTANT-CURRENT TYPE BATTERY CHARGER WITH MAINTENANCE-FREE, NICKEL-CADMIUM BATTERY, AC-ON INDICATOR LAMP AND TEST SWITCH.
5. MOUNTING - UNIVERSAL MOUNTING KIT FOR CEILING, WALL OR END-OF-FIXTURE MOUNTING.
6. ILLUMINATION - PROVIDED BY RED HIGH-OUTPUT LEDS INSIDE OF FIXTURE HOUSING. PROVIDE POLYSTYRENE DIFFUSER IN COLOR INDICATED WITH FREQUENCY-MATCHED SILKSCREEN COATING FOR MAXIMUM LED LIGHT OUTPUT.
7. VOLTAGE - OPERATING VOLTAGE OF 120-277V.
8. NOM. DIMENSIONS: (L=11.75" X W=8.25" X D=2").

LEGEND: ⊗	FIXTURE TYPE: X1,X2

NOTES:
BUILDING LIGHTS AND SHALL TURN ON AT DUSK. AUTOMATICALLY REDUCE LIGHTING POWER BY A MINIMUM OF 30% FROM 12 MIDNIGHT OR WITHIN ONE HOUR OF NORMAL CLOSING, WHICHEVER IS LATER, UNTIL 6AM OR NORMAL OPENING, WHICHEVER IS EARLIER. AUTOMATICALLY TURN OFF WHEN SUFFICIENT DAYLIGHT IS AVAILABLE.

LOCATED IN 2ND FLOOR ELECTRICAL ROOM

LIGHTING CONTACTOR, 120V COIL. PROVIDE QUANTITY OF CONTACT POLES SUFFICIENT FOR CIRCUITS SERVED (REFER TO LIGHTING PLANS). ENCLOSURE FOR CONTACTORS SHALL BE SIZED TO HOUSE ALL CONTACTORS, WIRING, AND ACCESSORIES WITH SUFFICIENT WORKING ROOM.

1 / EL502 — EXTERIOR POLE LIGHTS CONTACTOR DETAIL
SCALE: NONE

J:\greenwood\2025 Jobs\5825 USDA Sugarcane Research Lab Houma LA\07 Working Folder\Elec\EL501.dwg
May 20, 2026 – 9:05am

THE Johnson McAdams FIRM P.A.
ARCHITECTS/ENGINEERS PLANNING SURVEYING MANAGEMENT
P.O. BOX 513, GREENWOOD, MISSISSIPPI - (662) 455-4943

BRADEN T. DUKE, LICENSED PROFESSIONAL ENGINEER, 35781, STATE OF MISSISSIPPI — 05/20/26

NO.	DATE	BY	DESCRIPTION

REVISIONS

A-E FIRM	USDA
PROJECT MANAGER: REH	EPM: WN
DESIGNER: BTD	PPM: XXX
CHECKED BY: BTD	SAFETY & HEALTH: CM
JOB #: 5825	REAL PROPERTY: JS

USDA Agricultural Research Service

USDA AGRICULTURAL RESEARCH SERVICE
SUGARCANE RESEARCH LABORATOR
HOUMA, LOUISIANA

LIGHTING DETAILS

PROJECT NO. XXX
DATE 05/20/2026

AGRICULTURAL RESEARCH SERVICE
FACILITIES ENGINEERING BRANCH
5106 SUNNYSIDE AVENUE
BELTSVILLE, MD 20705-5100

SHEET EL502

GENERAL NOTES

1. COORDINATE POWER REQUIREMENTS FOR FUME HOODS, BSL-2 CABINET, AUTOCLAVE, FREEZERS, AND OTHER LAB RELATED EQUIPMENT WITH THE EXACT EQUIPMENT BEING INSTALLED PRIOR TO BEGINNING WORK.
2. COORDINATE MOUNTING REQUIREMENTS FOR ALL CASEWORK RECEPTACLES WITH THE CASEWORK VENDOR PRIOR TO BEGINNING WORK.

KEYED NOTES

1. SEE DETAIL 6/E-502 FOR MORE INFORMATION FOR PROJECTOR AND MOTORIZED SCREEN. COORDINATE LOCATIONS OF ALL DEVICES WITH THE ARCHITECT AND CONTRACTING OFFICER PRIOR TO ROUGH-IN.
2. LOCATE RECEPTACLES ON TABLE MOUNTED PEDESTAL. COORDINATE LOCATION WITH LAB CASE WORK SUPPLIER.
3. LOCATE RECEPTACLES ON UTILITY CHASE. COORDINATE WITH LAB CASEWORK SUPPLIER.
4. POWER PROVISIONS FOR WORK BENCHES. COORDINATE EXACT REQUIREMENTS WITH THE CONTRACTING OFFICER PRIOR TO ROUGH-IN.
5. COORDINATE COUNTERTOP RECEPTACLE MOUNTING HEIGHTS WITH CASEWORK VENDOR AND ARCHITECT PRIOR TO ROUGH IN.

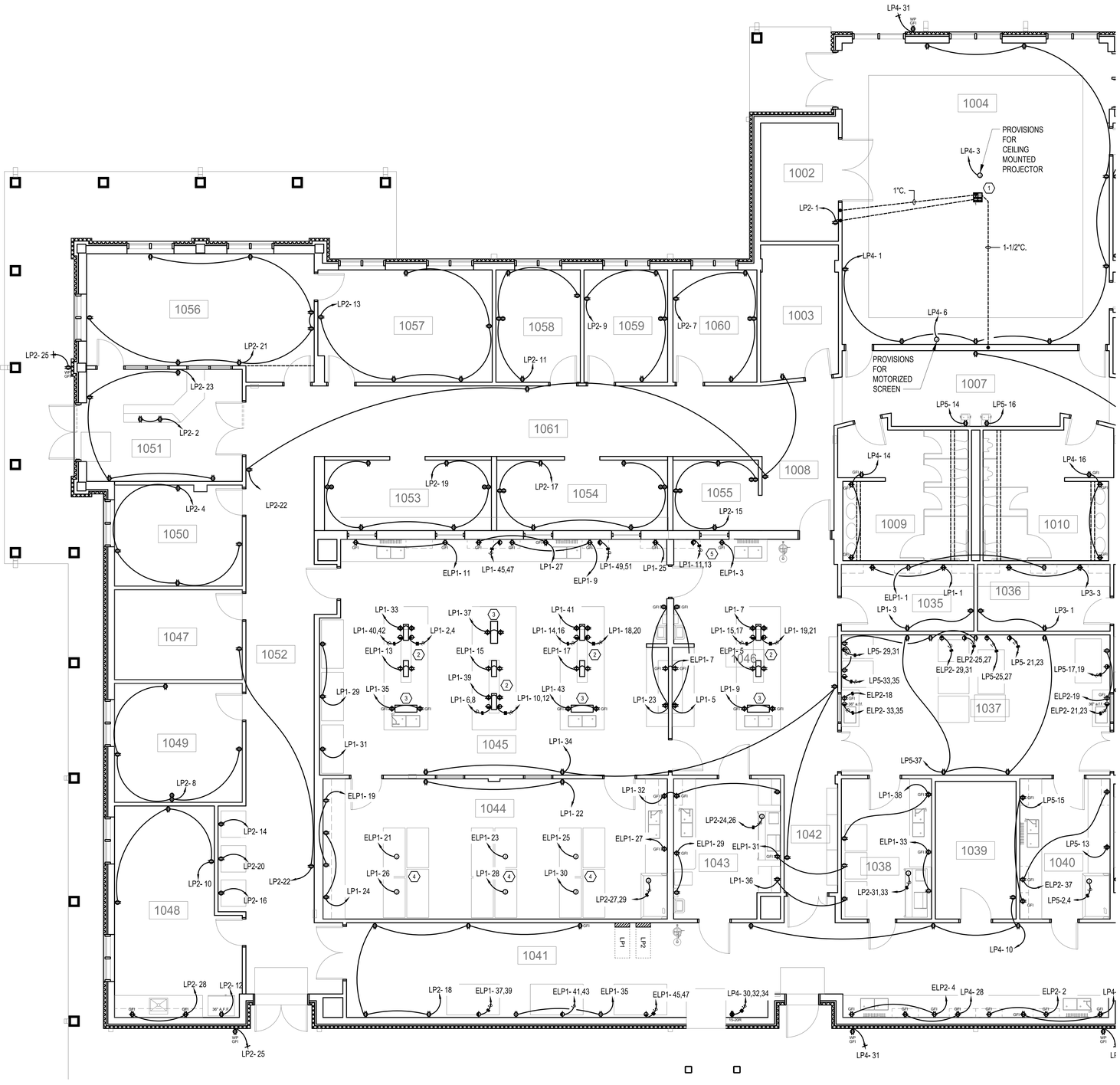

1 EP101 FIRST FLOOR POWER PLAN - WEST

SCALE: 3/16" = 1'-0"

PLAN NORTH

TRUE NORTH

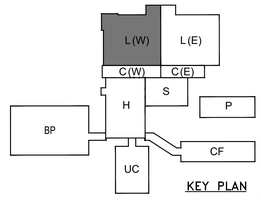

KEY PLAN

NO.	DATE	BY	DESCRIPTION

REVISIONS

Jacobs Johnson, McAdams PSM P.A. ARCHITECTS/ENGINEERS PLANNING SURVEYING MANAGEMENT P.O. BOX 5-5, GREENWOOD, MISSISSIPPI - (662) 455-4443

A-E FIRM	USDA
PROJECT MANAGER	EPM
REH	WN
DESIGNER	PPM
BTD	XXX
CHECKED BY	SAFETY & HEALTH
BTD	CM
JOB #	REAL PROPERTY
5825	JS

USDA Agricultural Research Service

USDA AGRICULTURAL RESEARCH SERVICE
SUGARCANE RESEARCH LABORATOR
HOUMA, LOUISIANA

FIRST FLOOR POWER PLAN - WEST

PROJECT NO. XXX	AGRICULTURAL RESEARCH SERVICE FACILITIES ENGINEERING BRANCH 5106 SUNNYSIDE AVENUE BELTSVILLE, MD 20705-5100	SHEET EP101
DATE 05/20/2026		162 OF 176

BRADEN T. DUKE — REGISTERED PROFESSIONAL ENGINEER — 25766 — STATE OF MISSISSIPPI — 05/20/26

J:\Greenwood\2025 Jobs\5825 USDA Sugarcane Research Lab Houma LA\07 Working Folder\[Disc]\EP101.dwg
May 20, 2026 - 8:05am

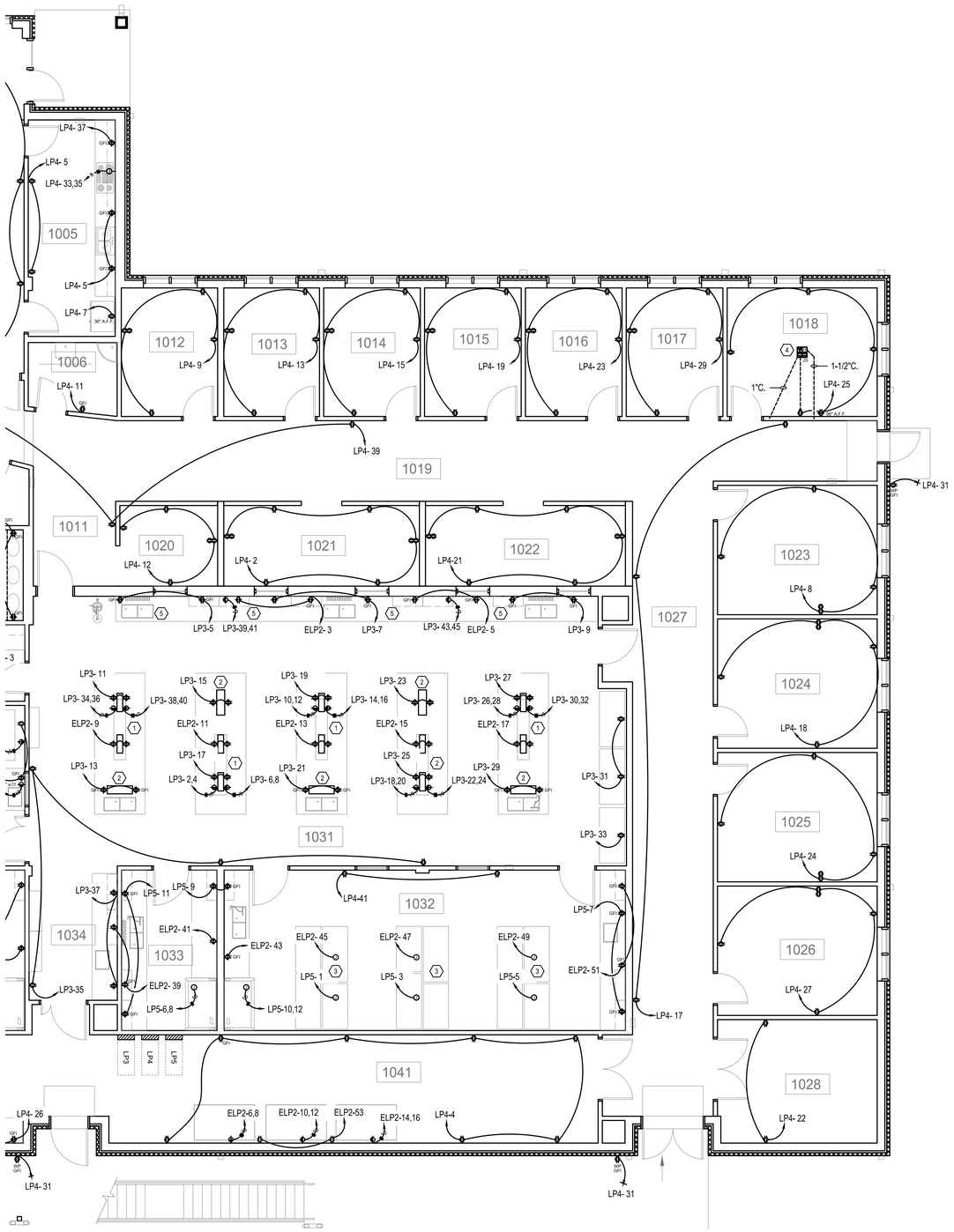

1 EP102 FIRST FLOOR POWER PLAN - EAST
SCALE: 3/16" = 1'-0"

PLAN NORTH TRUE NORTH

GENERAL NOTES

1. COORDINATE POWER REQUIREMENTS FOR FUME HOODS, BSL-2 CABINET, AUTOCLAVE, FREEZERS, AND OTHER LAB RELATED EQUIPMENT WITH THE EXACT EQUIPMENT BEING INSTALLED PRIOR TO BEGINNING WORK.
2. COORDINATE MOUNTING REQUIREMENTS FOR ALL CASEWORK RECEPTACLES WITH THE CASEWORK VENDOR PRIOR TO BEGINNING WORK.

KEYED NOTES

1. LOCATE RECEPTACLES ON TABLE MOUNTED PEDESTAL. COORDINATE LOCATION WITH LAB CASE WORK SUPPLIER.
2. LOCATE RECEPTACLES ON UTILITY CHASE. COORDINATE WITH LAB CASEWORK SUPPLIER.
3. POWER PROVISIONS FOR WORK BENCHES. COORDINATE EXACT REQUIREMENTS WITH THE CONTRACTING OFFICER PRIOR TO ROUGH-IN.
4. SEE DETAIL 7/E-502 FOR MORE INFORMATION FOR FLOOR BOX AND WALL-MOUNTED MONITOR. COORDINATE LOCATIONS OF ALL DEVICES WITH THE ARCHITECT AND CONTRACTING OFFICER PRIOR TO ROUGH-IN.
5. COORDINATE COUNTERTOP RECEPTACLE MOUNTING HEIGHTS WITH CASEWORK VENDOR AND ARCHITECT PRIOR TO ROUGH IN.

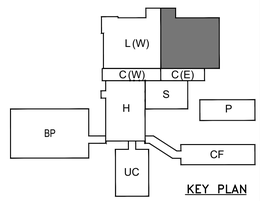

KEY PLAN

NO.	DATE	BY	DESCRIPTION

REVISIONS

Johnson McAdams
ARCHITECTS ENGINEERS PLANNERS SURVEYING MANAGEMENT
P.O. BOX 1115, GREENWOOD, MISSISSIPPI 38935 (662) 455-6600

A-E FIRM	USDA
PROJECT MANAGER REH	EPM WN
DESIGNER BTD	PPM XXX
CHECKED BY BTD	SAFETY & HEALTH CM
JOB # 5825	REAL PROPERTY JS

USDA Agricultural Research Service

USDA AGRICULTURAL RESEARCH SERVICE
SUGARCANE RESEARCH LABORATOR
HOUMA, LOUISIANA

FIRST FLOOR POWER PLAN - EAST

PROJECT NO. XXX
DATE 05/20/2026

AGRICULTURAL RESEARCH SERVICE
FACILITIES ENGINEERING BRANCH
5106 SUNNYSIDE AVENUE
BELTSVILLE, MD 20705-5100

SHEET EP102
163 OF 176

J:\greenwood\2025 Jobs\5825 USDA Sugarcane Research Lab Houma LA\07 Working Folder\Elec\EP101.dwg
May 20, 2026 - 9:05am

GENERAL NOTES

1. SEE EM102 FOR HEADHOUSE ELECTRICAL ROOM LOCATION AND PANELS. COORDINATE CONDUIT ROUTING AND PULL BOX LOCATIONS PRIOR TO INSTALLING CONDUIT BETWEEN HEADHOUSE AND LAB BUILDING. PROVIDE EXPANSION JOINTS FOR ALL CONDUIT ROUTED BETWEEN BUILDINGS.

1 EP201 SECOND FLOOR POWER PLAN
SCALE: 1/4" = 1'-0"

PLAN NORTH TRUE NORTH

J:\greenwood\2025 Jobs\5825 USDA Sugarcane Research Lab Houma LA\07 Working Folder\Elec\EP101.dwg
May 20, 2026 – 9:05am

THE Johnson McAdams FIRM P.A.
ARCHITECTS/ENGINEERS PLANNING SURVEYING MANAGEMENT
P.O. BOX 513, GREENWOOD, MISSISSIPPI - (662) 455-4943

NO.	DATE	BY	DESCRIPTION

REVISIONS

A-E FIRM	USDA
PROJECT MANAGER REH	EPM WN
DESIGNER BTD	PPM XXX
CHECKED BY BTD	SAFETY & HEALTH CM
JOB # 5825	REAL PROPERTY JS

USDA

USDA Agricultural Research Service

USDA AGRICULTURAL RESEARCH SERVICE
SUGARCANE RESEARCH LABORATOR
HOUMA, LOUISIANA

SECOND FLOOR POWER PLAN

PROJECT NO. XXX
DATE 05/20/2026

AGRICULTURAL RESEARCH SERVICE
FACILITIES ENGINEERING BRANCH
5106 SUNNYSIDE AVENUE
BELTSVILLE, MD 20705-5100

SHEET EP201
164 OF 176

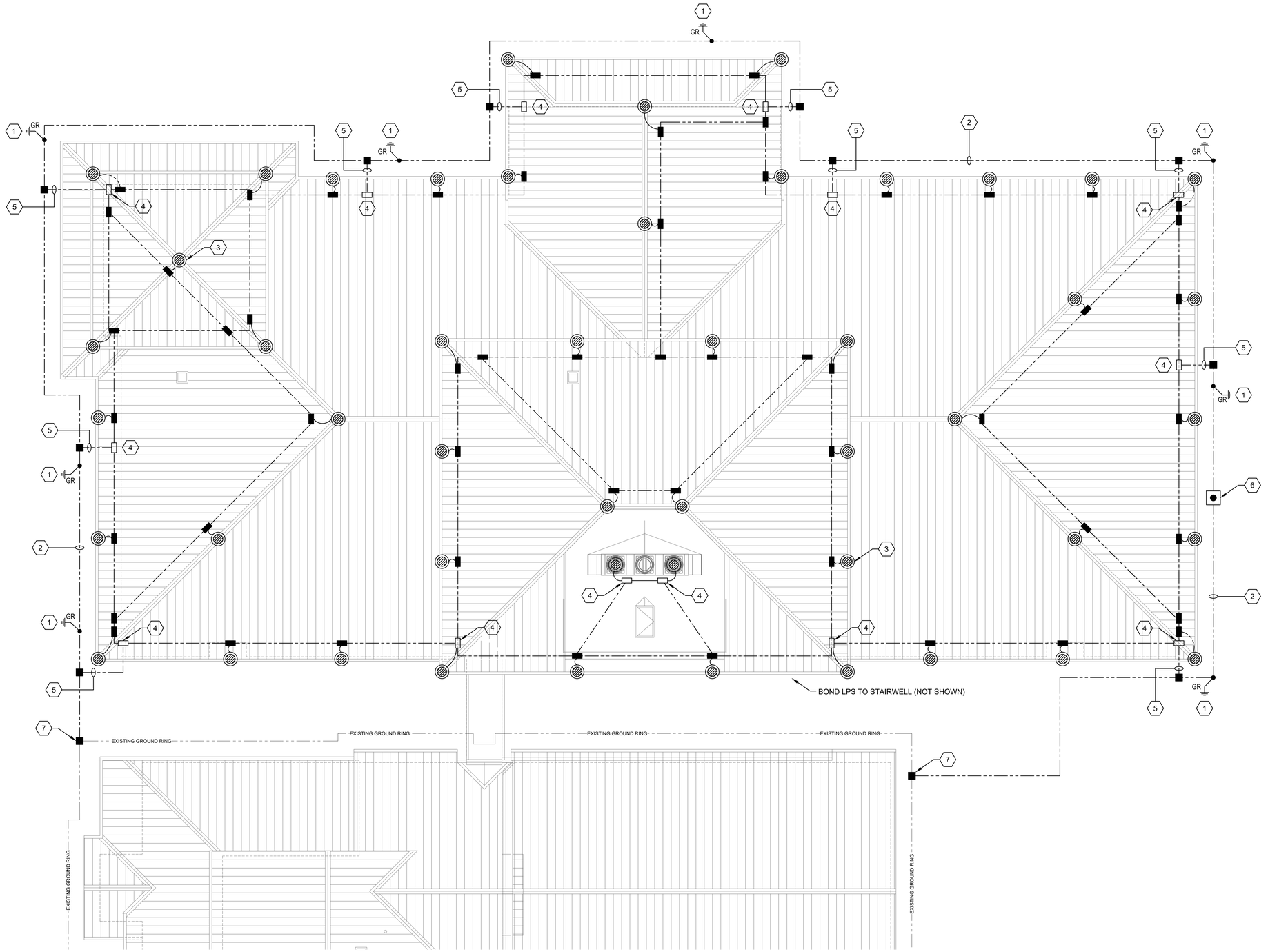

1 EG101 LIGHTNING PROTECTION PLAN
SCALE: 1/8" = 1'-0"

PLAN NORTH TRUE NORTH

GENERAL NOTES

A. LIGHTNING PROTECTION SYSTEM SHALL COMPLY WITH NFPA 780 AND SPECIFICATION 26 41 00.

B. BOND TO WATER SERVICE PIPE AND OTHER METALLIC PIPING SYSTEMS AS REQUIRED BY NFPA 780 AND 70.

C. INTERCONNECT LIGHTNING PROTECTION GROUNDING SYSTEM TO ELECTRICAL POWER SYSTEM, TELEPHONE, AND BUILDING GROUNDING GRID SYSTEMS AS REQUIRED BY NFPA 780 AND 70.

D. PROVIDE ADDITIONAL GROUND RODS AS NECESSARY TO ACHIEVE AN OVERALL GROUND GRID SYSTEM OF RESISTANCE LESS THAN 10 OHMS.

E. BARE COPPER LIGHTNING PROTECTION MATERIALS SHALL NOT BE INSTALLED IN CONTACT WITH ALUMINUM.

F. INSTALLED LIGHTNING PROTECTION SYSTEM SHALL BE FIELD INSPECTED BY CONTRACTOR PROVIDED INDEPENDENT TESTING AGENCY AND FURNISHED WITH A UL MASTER LABEL FOR LIGHTNING PROTECTION SYSTEM.

G. PROVIDE PVC SLEEVE WHEREVER GROUNDING CONDUCTOR MUST PASS THROUGH CONCRETE PAD, SLAB, OR FOUNDATION GRADE BEAM.

H. BOND LIGHTNING PROTECTION SYSTEM TO THE EXISTING GROUNDING ELECTRODE SYSTEM PER NFPA 780.

X KEYED NOTES

1. PROVIDE EXOTHERMIC CONNECTIONS TO GROUND RODS (EXCLUDING TEST WELLS) SHALL BE MADE AT A POINT NOT LESS THAN 2' BELOW GRADE AND 3' FROM THE FOUNDATION WALL. REFER TO DETAIL 1/EG501.
2. PROVIDE #2/0 BARE COPPER GROUND CABLE 2' BELOW GRADE. PROVIDE 3/4" X 10' COPPER CLAD GROUND RODS. BOND ALL GROUND RODS TOGETHER PER DETAIL 1/EG501.
3. PROVIDE CONCEALED TYPE COPPER AIR TERMINAL LOCATED WITHIN 2' OF NSMR ROOF PERIMETER, OR AS INDICATED. PROVIDE CONDUCTOR FROM AIR TERMINAL TO STRUCTURAL STEEL BONDING PLATE. REFER TO DETAIL 3/EG501. ROOFING CONTRACTOR SHALL INSTALL AIR TERMINALS PENETRATIONS THROUGH ROOFING SYSTEM.
4. PROVIDE BONDING PLATE TO STRUCTURAL STEEL. PROVIDE DOWN CONDUCTOR TO GROUND COUNTERPOISE. REFER TO DETAIL 1/EG501
5. PROVIDE DOWN CONDUCTOR FROM CONCEALED CROSS CONDUCTOR TO GROUND ROD IN 3/4" PVC CONDUIT AS PER NEC.
6. PROVIDE GROUND TEST WELL. REFER TO DETAIL 4/EG501.
7. CONNECT NEW GROUND RING TO EXISTING GROUND RING PER NFPA 780.

GRAPHIC SCALE

8' 0 4' 8'
SCALE: 1/8"= 1'-0"

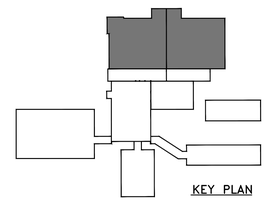

KEY PLAN

NO.	DATE	BY	DESCRIPTION

REVISIONS

THE Johnson McAdams FIRM P.A.
ARCHITECTURE · ENGINEERING · PLANNING · SURVEYING · MANAGEMENT
P.O. BOX 515, GREENWOOD, MISSISSIPPI - 38930 - 4515 - 4515

A-E FIRM	USDA
PROJECT MANAGER REH	EPM WN
DESIGNER BTD	PPM XXX
CHECKED BY BTD	SAFETY & HEALTH CM
JOB # 5825	REAL PROPERTY JS

USDA Agricultural Research Service

USDA AGRICULTURAL RESEARCH SERVICE
SUGARCANE RESEARCH LABORATOR
HOUMA, LOUISIANA

LIGHTNING PROTECTION PLAN

PROJECT NO.	AGRICULTURAL RESEARCH SERVICE FACILITIES ENGINEERING BRANCH 5106 SUNNYSIDE AVENUE BELTSVILLE, MD 20705-5100	SHEET
XXX		EG101
DATE 05/20/2026		165 OF 176

J:\greenwood\2025 Jobs\5825 USDA Sugarcane Research Lab Houma LA\07 Working Folder\Elec\EG101.dwg
May 20, 2026 - 9:05am

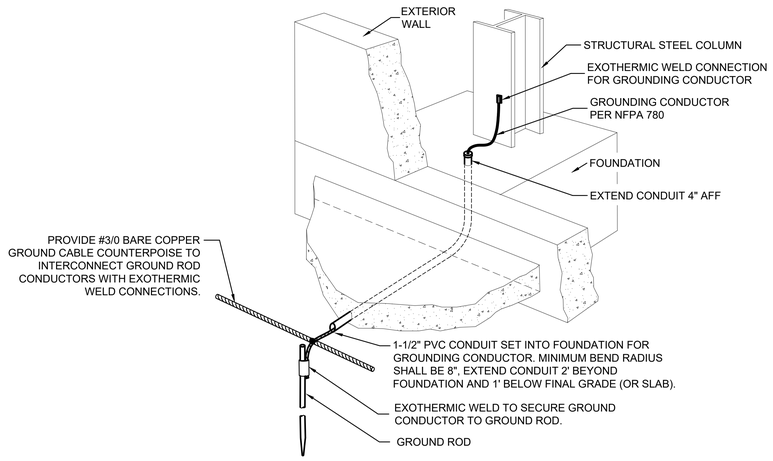

1 EG501 GROUND ROD CONNECTION DETAIL
SCALE: NO SCALE

NOTE:
PROVIDE NON-PENETRATING LIGHTNING PROTECTION ATTACHMENT HARDWARE SPECIFICALLY LISTED FOR STANDING SEAM METAL ROOFING SYSTEMS. COORDINATE ALL ATTACHMENT METHODS WITH ROOFING MANUFACTURER TO MAINTAIN ROOF WARRANTY.

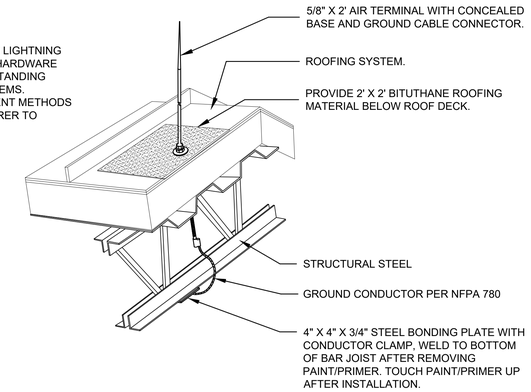

2 EG501 LIGHTING PROTECTION AIR TERMINAL
SCALE: NO SCALE

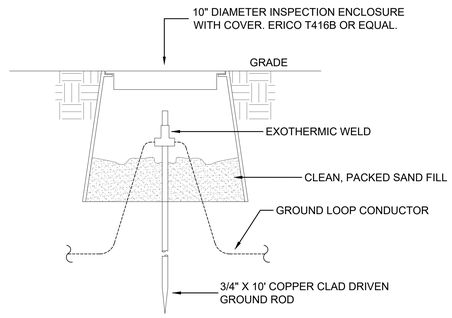

3 EG501 GROUND WELL TEST ROD DETAIL
SCALE: NO SCALE

NO.	DATE	BY	DESCRIPTION

REVISIONS

THE Johnson McAdams FIRM P.C.
ARCHITECTS ENGINEERS PLANNERS SURVEYING MANAGEMENT
P.O. BOX 515, GREENWOOD, MISSISSIPPI - 2602 455-8400

A-E FIRM	USDA
PROJECT MANAGER REH	EPM WN
DESIGNER BTD	PPM XXX
CHECKED BY BTD	SAFETY & HEALTH CM
JOB # 5825	REAL PROPERTY JS

USDA Agricultural Research Service

USDA AGRICULTURAL RESEARCH SERVICE
SUGARCANE RESEARCH LABORATOR
HOUMA, LOUISIANA

LIGHTNING PROTECTION DETAILS

PROJECT NO. XXX
DATE 05/20/2026

AGRICULTURAL RESEARCH SERVICE
FACILITIES ENGINEERING BRANCH
5106 SUNNYSIDE AVENUE
BELTSVILLE, MD 20705-5100

SHEET EG501
166 OF 176

J:\greenwood\2025 Jobs\5825 USDA Sugarcane Research Lab Houma LA\07 Working Folder\Elec\EG501.dwg
May 20, 2026 - 9:05am

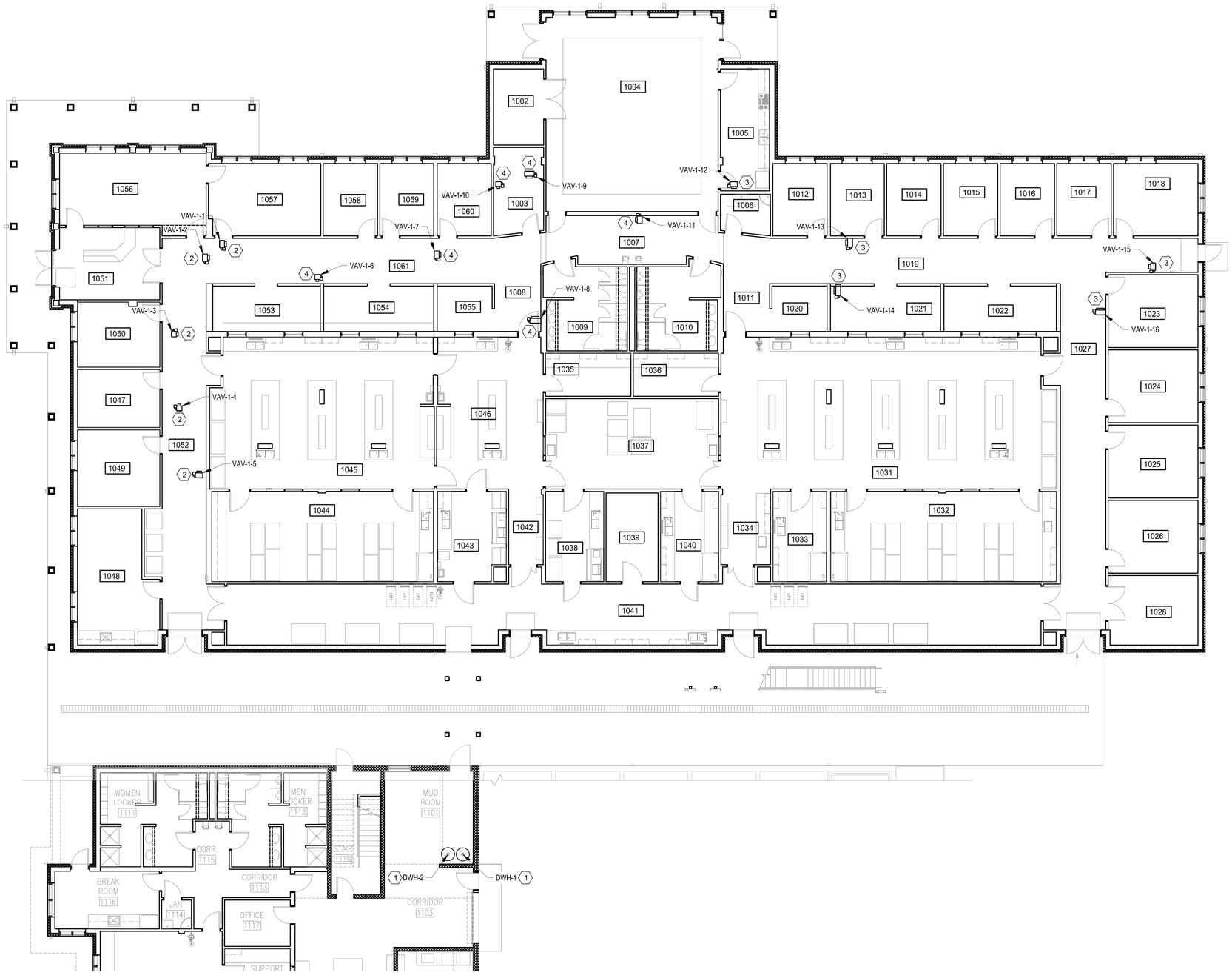

1 EM101 FIRST FLOOR MECHANICAL CONNECTIONS PLAN

SCALE: 1/8" = 1'-0"

PLAN NORTH

TRUE NORTH

GENERAL NOTES

1. PROVIDE ALL REQUIRED EMPTY CONDUIT PATHWAYS, JUNCTION BOXES, PULL BOXES, AND ASSOCIATED RACEWAY COMPONENTS REQUIRED FOR TEMPERATURE CONTROLS, BUILDING AUTOMATION SYSTEM (BAS), INTERLOCK, COMMUNICATION, AND LOW-VOLTAGE CONTROL WIRING ASSOCIATED WITH MECHANICAL EQUIPMENT FOR A COMPLETE AND FULLY FUNCTIONAL SYSTEM. COORDINATE ALL REQUIREMENTS, ROUTING, AND TERMINATION LOCATIONS WITH APPROVED MECHANICAL EQUIPMENT SUBMITTALS AND CONTROLS SHOP DRAWINGS PRIOR TO ROUGH-IN.

KEYED NOTES

1. DISCONNECT EXISTING CIRCUITRY DURING DEMOLITION AND RECONNECT AFTER NEW UNIT IS INSTALLED.
2. VAV BOXES ON WEST SIDE OF BUILDING SHALL BE FED FROM PANEL LP2-35. UTILIZE 2#10, #10(G), 3/4"C.
3. ALL VAV BOXES ON EAST SIDE OF BUILDING SHALL BE FED FROM PANEL LP2-37. UTILIZE 2#10, #10(G), 3/4"C.
4. ALL VAV BOXES ON THE NORTH WEST SIDE OF THE BUILDING SHALL BE FED FROM PANEL LP2-39. UTILIZE 2#10, #10(G), 3/4"C.

NO.	DATE	BY	DESCRIPTION

REVISIONS

The Johnson McAdams Firm
ARCHITECTS/ENGINEERS PLANNERS SURVEYING MANAGEMENT
P.O. BOX 615, GREENWOOD, MISSISSIPPI - (662) 455-6943

USDA Agricultural Research Service

USDA AGRICULTURAL RESEARCH SERVICE
SUGARCANE RESEARCH LABORATOR
HOUMA, LOUISIANA

FIRST FLOOR MECHANICAL CONNECTIONS PLAN

A-E FIRM	USDA
PROJECT MANAGER REH	EPM WN
DESIGNER BTD	PPM XXX
CHECKED BY BTD	SAFETY & HEALTH CM
JOB # 5825	REAL PROPERTY JS

PROJECT NO. XXX
DATE 05/20/2026

AGRICULTURAL RESEARCH SERVICE
FACILITIES ENGINEERING BRANCH
5106 SUNNYSIDE AVENUE
BELTSVILLE, MD 20705-5100

SHEET EM101
167 OF 176

J:\greenwood\2025 Jobs\5825 USDA Sugarcane Research Lab Houma LA\07 Working Folder\Elec\EM101.dwg
May 20, 2026 - 9:05am

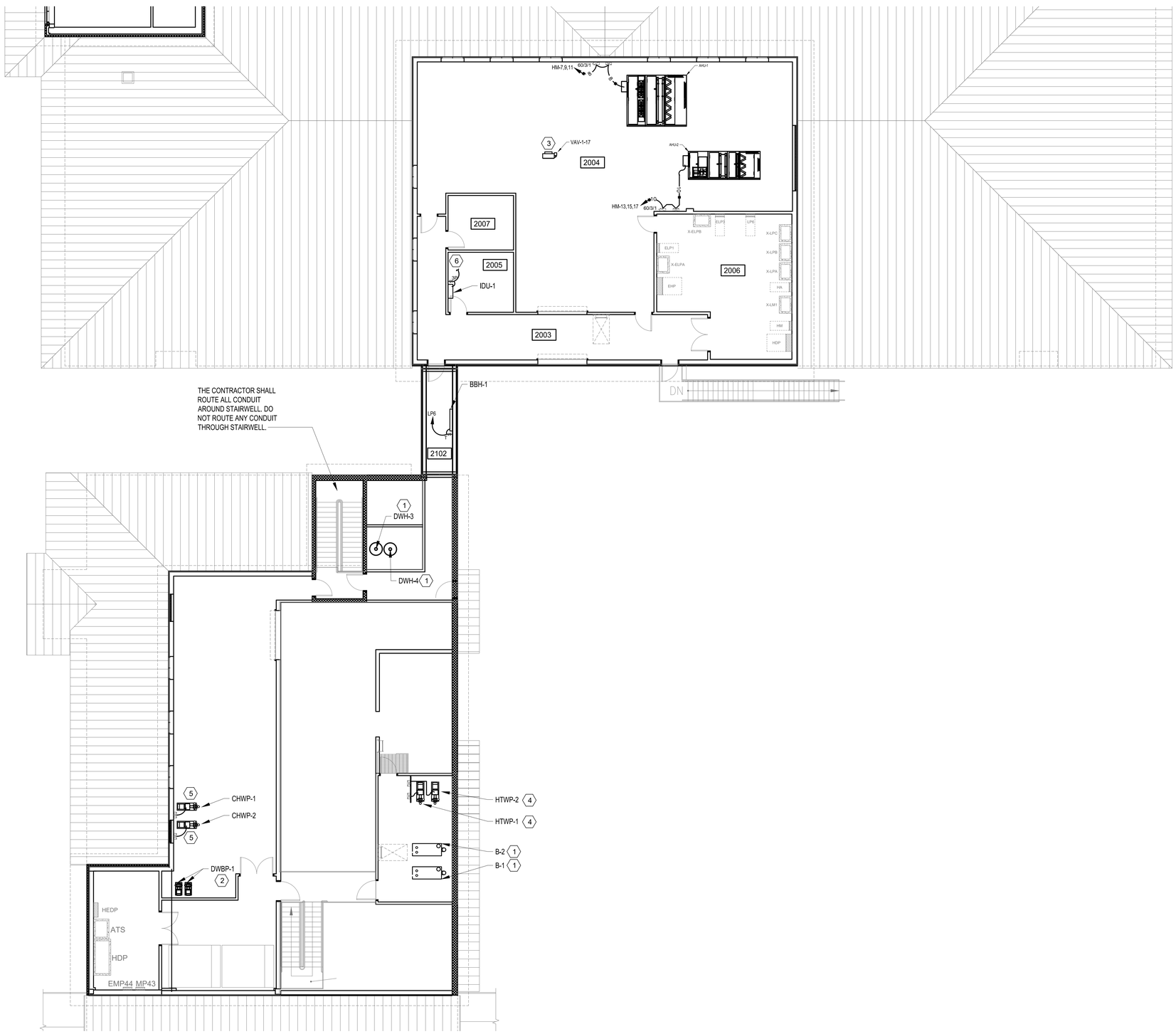

1 EM102 SECOND FLOOR MECHANICAL CONNECTIONS PLAN
SCALE: 1/8" = 1'-0"

PLAN NORTH TRUE NORTH

GENERAL NOTES

1. PROVIDE ALL REQUIRED EMPTY CONDUIT PATHWAYS, JUNCTION BOXES, PULL BOXES, AND ASSOCIATED RACEWAY COMPONENTS REQUIRED FOR TEMPERATURE CONTROLS, BUILDING AUTOMATION SYSTEM (BAS), INTERLOCK, COMMUNICATION, AND LOW-VOLTAGE CONTROL WIRING ASSOCIATED WITH MECHANICAL EQUIPMENT FOR A COMPLETE AND FULLY FUNCTIONAL SYSTEM. COORDINATE ALL REQUIREMENTS, ROUTING, AND TERMINATION LOCATIONS WITH APPROVED MECHANICAL EQUIPMENT SUBMITTALS AND CONTROLS SHOP DRAWINGS PRIOR TO ROUGH-IN.

KEYED NOTES

1. DISCONNECT EXISTING CIRCUITRY DURING DEMOLITION AND RECONNECT AFTER NEW UNIT IS INSTALLED.
2. DISCONNECT EXISTING CIRCUITRY DURING DEMOLITION AND RECONNECT AFTER NEW UNIT AND VFD IS INSTALLED. EXTEND EXISTING CIRCUITRY WITH 3#12, #12(G), 3/4"C.
3. VAV BOX 1-17 SHALL BE FED FROM PANEL LP6-10. UTILIZE 2#12, #12(G), 3/4"C.
4. REPLACE EXISTING 25/3 BREAKER IN EXISTING PANEL EMP44 IN HEADHOUSE ELECTRICAL ROOM 2106 WITH A 40/3 BREAKER. MATCH EXISTING TYPE AND AIC RATING. UTILIZE EXISTING CONDUIT AND ROUTE 3#10, #10(G) TO PUMP. ROUTE CIRCUITRY THROUGH VFD PROVIDED BY THE MECHANICAL CONTRACTOR AND INSTALLED BY THE ELECTRICAL CONTRACTOR.
5. REPLACE EXISTING 25/3 BREAKER IN EXISTING PANEL MP43 IN HEADHOUSE ELECTRICAL ROOM 2106 WITH A 40/3 BREAKER. MATCH EXISTING TYPE AND AIC RATING. UTILIZE EXISTING CONDUIT AND ROUTE 3#10, #10(G) TO PUMP. ROUTE CIRCUITRY THROUGH VFD PROVIDED BY THE MECHANICAL CONTRACTOR AND INSTALLED BY THE ELECTRICAL CONTRACTOR.
6. CONNECTION TO OUTDOOR ROOF MOUNTED UNIT ODU-1. SEE DETAIL 3/E-502 FOR TYPICAL CONNECTION.

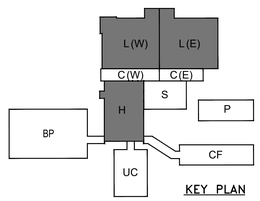

KEY PLAN

0 4' 8' 16' 24'
SCALE: 1/8"= 1'-0"

NO.	DATE	BY	DESCRIPTION

REVISIONS

Johnson McAdams
ARCHITECTURE ENGINEERING PLANNING SURVEYING MANAGEMENT
P.O. BOX 1115, GREENWOOD, MISSISSIPPI 38935-1115

A-E FIRM	USDA
PROJECT MANAGER REH	EPM WN
DESIGNER BTD	PPM XXX
CHECKED BY BTD	SAFETY & HEALTH CM
JOB # 5825	REAL PROPERTY JS

USDA Agricultural Research Service

USDA AGRICULTURAL RESEARCH SERVICE
SUGARCANE RESEARCH LABORATOR
HOUMA, LOUISIANA

SECOND FLOOR MECHANICAL CONNECTIONS PLAN

PROJECT NO. XXX
DATE 05/20/2026

AGRICULTURAL RESEARCH SERVICE
FACILITIES ENGINEERING BRANCH
5106 SUNNYSIDE AVENUE
BELTSVILLE, MD 20705-5100

SHEET EM102
168 OF 176

J:\greenwood\2025 Jobs\5825 USDA Sugarcane Research Lab Houma LA\07 Working Folder\Elec\EM101.dwg
May 20, 2026 - 9:05am

GENERAL NOTES

1. PROVIDE ALL REQUIRED EMPTY CONDUIT PATHWAYS, JUNCTION BOXES, PULL BOXES, AND ASSOCIATED RACEWAY COMPONENTS REQUIRED FOR TEMPERATURE CONTROLS, BUILDING AUTOMATION SYSTEM (BAS), INTERLOCK, COMMUNICATION, AND LOW-VOLTAGE CONTROL WIRING ASSOCIATED WITH MECHANICAL EQUIPMENT FOR A COMPLETE AND FULLY FUNCTIONAL SYSTEM. COORDINATE ALL REQUIREMENTS, ROUTING, AND TERMINATION LOCATIONS WITH APPROVED MECHANICAL EQUIPMENT SUBMITTALS AND CONTROLS SHOP DRAWINGS PRIOR TO ROUGH-IN.

KEYED NOTES

1. MOUNT VFD IN MECHANICAL ROOM BELOW. MOUNT DISCONNECT ON UNISTRUT RACK ADJACENT TO UNIT. COORDINATE CONDUIT STUB UP. SEAL ALL ROOF CONDUIT PENETRATIONS. SEE DETAIL 4/E-502 FOR VFD/MOTOR DISCONNECT SWITCH DETAIL.
2. COORDINATE CONDUIT STUB UP LOCATION WITH EXHAUST FAN MANUFACTUER PRIOR TO INSTALLATION.
3. MOUNT DISCONNECT ON UNISTRUT RACK ADJACENT TO UNIT. SEE DETAIL 3/E-502 FOR TYPICAL MINI-SPLIT CONNECTION DETAIL.

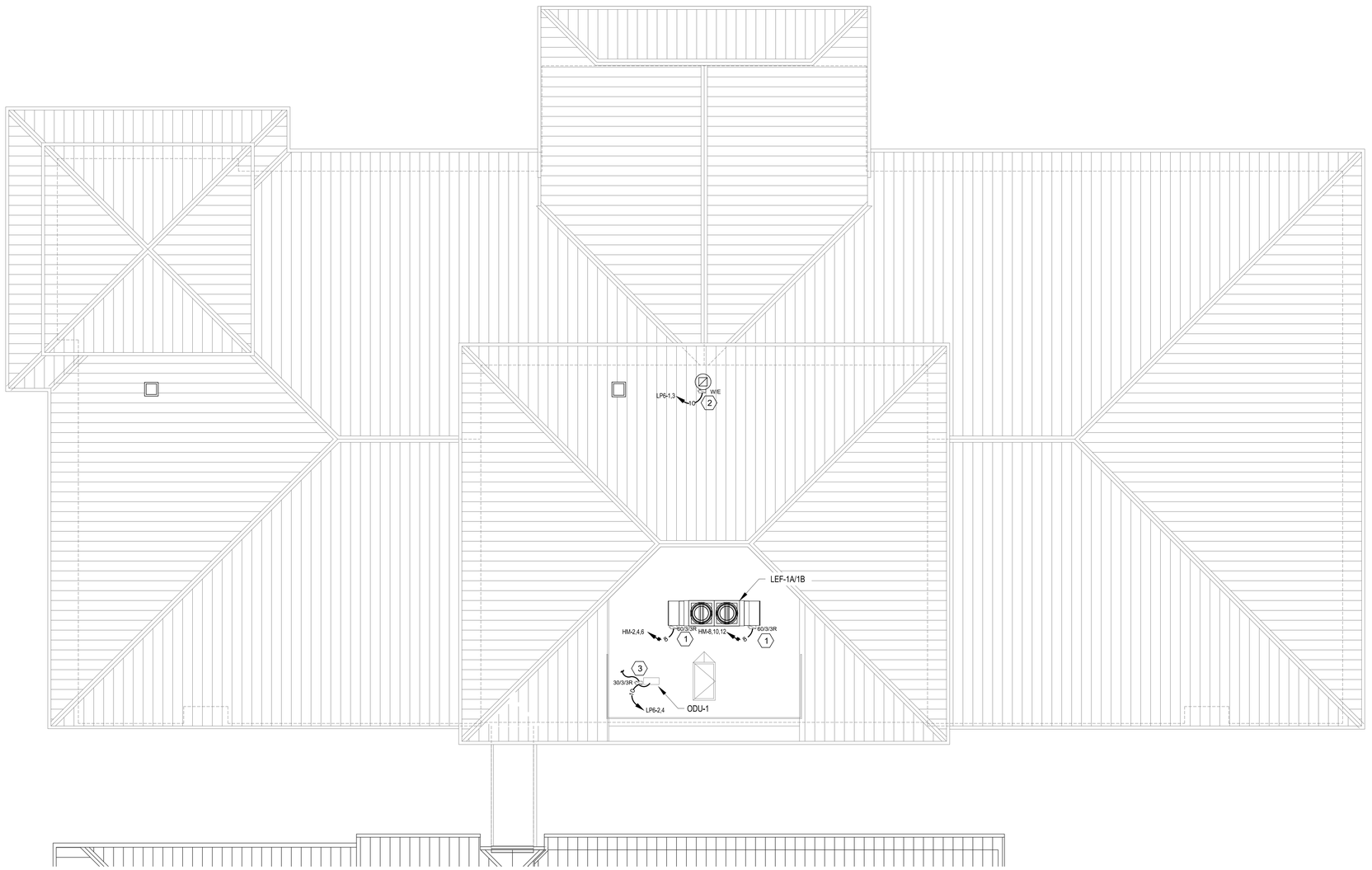

1 EM103 ROOF MECHANICAL CONNECTIONS PLAN

SCALE: 1/8" = 1'-0"

PLAN NORTH TRUE NORTH

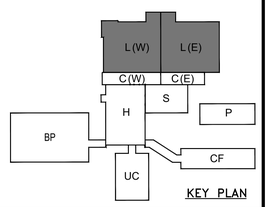

KEY PLAN

NO.	DATE	BY	DESCRIPTION

REVISIONS

Johnson, Mirmiran & Thompson, Inc. — Architecture, Engineering, Surveying, Technology — P.O. BOX 513, GREENWOOD, MISSISSIPPI - (662) 455-4462

USDA Agricultural Research Service

USDA AGRICULTURAL RESEARCH SERVICE
SUGARCANE RESEARCH LABORATOR
HOUMA, LOUISIANA

ROOF MECHANICAL CONNECTIONS PLAN

A-E FIRM	USDA
PROJECT MANAGER	REH
EPM	WN
DESIGNER	BTD
PPM	XXX
CHECKED BY	BTD
SAFETY & HEALTH	CM
JOB #	5825
REAL PROPERTY	JS
PROJECT NO.	XXX
DATE	05/20/2026

AGRICULTURAL RESEARCH SERVICE
FACILITIES ENGINEERING BRANCH
5106 SUNNYSIDE AVENUE
BELTSVILLE, MD 20705-5100

SHEET EM103

KEVIN T. DUNN — 25781 — REGISTERED PROFESSIONAL ENGINEER — 05/20/26 — STATE OF MISSISSIPPI

J:\gramwood\2025 Jobs\5825 USDA Sugarcane Research Lab Houma LA\07 Working Folder\Elec\EM101.dwg
May 20, 2026 - 9:05am

GENERAL NOTES

1. CONTRACTOR SHALL PROVIDE A COMPLETE AND FULLY OPERATIONAL ELECTRONIC SECURITY SYSTEM (ESS), ACCESS CONTROL SYSTEM (ACS), AND CLOSED-CIRCUIT TELEVISION SYSTEM (CCTV) AS INDICATED ON THESE DRAWINGS AND DIVISION 28 SPECIFICATIONS.
2. THESE DRAWINGS ARE DIAGRAMMATIC IN NATURE AND ARE INTENDED TO INDICATE THE GENERAL ARRANGEMENT OF DEVICES AND SCOPE OF WORK ONLY. EXACT DEVICE LOCATIONS, CONDUIT ROUTING, AND INSTALLATION DETAILS SHALL BE COORDINATED WITH THE APPROPRIATE SYSTEM INTEGRATOR/VENDOR PRIOR TO BEGINNING WORK.
3. SHOP DRAWINGS SHOWING EXACT EQUIPMENT TO BE INSTALLED AND POINT TO POINT WIRING SHALL BE SUBMITTED PRIOR TO BEGINNING WORK FOR EACH SYSTEM.
4. CONTRACTOR SHALL COORDINATE ALL REQUIREMENTS FOR IP-BASED SYSTEMS WITH THE CONTRACTING OFFICER PRIOR TO BEGINNING WORK.
5. ACCESS CONTROL SYSTEM SHALL BE FULLY COMPATIBLE WITH AND INTEGRATED INTO THE EXISTING USDA ePACS ACCESS CONTROL SYSTEM UTILIZING LENEL HARDWARE/SOFTWARE. PROVIDE ALL REQUIRED CONTROLLERS, LICENSING, PROGRAMMING, NETWORK CONNECTIONS, COORDINATION, AND ACCESSORIES REQUIRED FOR A COMPLETE AND OPERATIONAL INTEGRATED SYSTEM. COORDINATE ALL REQUIREMENTS WITH USDA PRIOR TO PROCUREMENT AND INSTALLATION. PROVIDE (1) LENEL CLIENT WORKSTATION LICENSE IN THE LAB BUILDING RECEPTION AREA.
6. SEE DETAIL 2/E-502 FOR TYPICAL ACCESS CONTROLLED DOOR REQUIREMENTS. COORDINATE EXACT REQUIREMENTS WITH ACCESS CONTROL VENDOR PRIOR TO INSTALLATION.
7. THE CCTV SYSTEM BASIS OF DESIGN IS AN AV COSTAR OR AVILILON SYSTEM. ALL CCTV COMPONENTS SHALL BE BAA COMPLIANT.

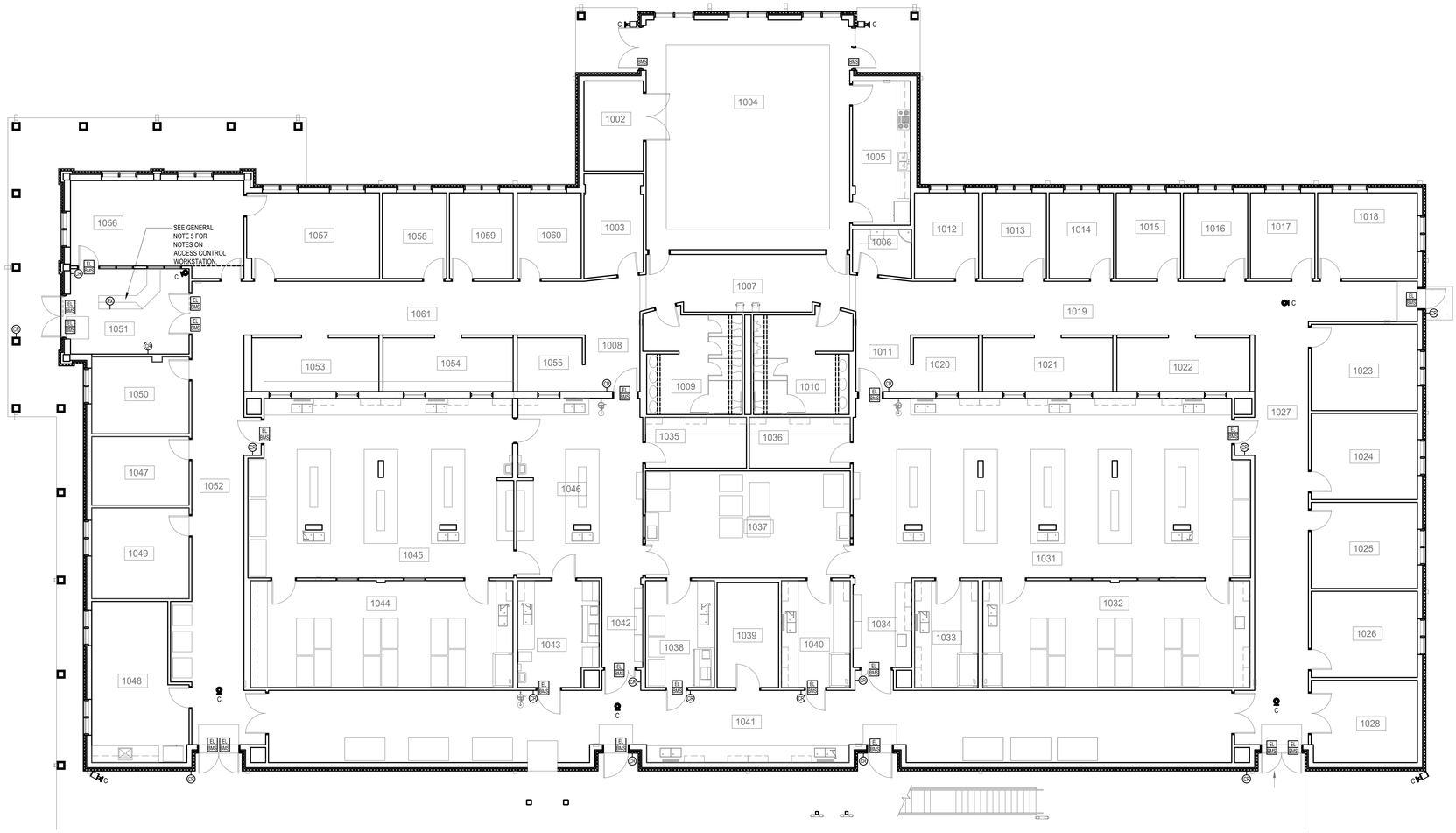

1 EY101 FIRST FLOOR SPECIAL SYSTEMS PLAN
SCALE: 1/8"=1'-0"

PLAN NORTH TRUE NORTH

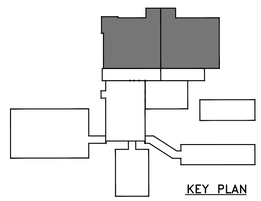

KEY PLAN

NO.	DATE	BY	DESCRIPTION

REVISIONS

Johnson McAdams
ARCHITECTS ENGINEERS PLANNERS SURVEYING MANAGEMENT
P.O. BOX 515, GREENWOOD, MISSISSIPPI 38602-0515

A-E FIRM	USDA
PROJECT MANAGER REH	EPM WN
DESIGNER BTD	PPM XXX
CHECKED BY BTD	SAFETY & HEALTH CM
JOB # 5825	REAL PROPERTY JS

USDA Agricultural Research Service

USDA AGRICULTURAL RESEARCH SERVICE
SUGARCANE RESEARCH LABORATOR
HOUMA, LOUISIANA

FIRST FLOOR SPECIAL SYSTEMS PLAN

PROJECT NO. XXX
DATE 05/20/2026

AGRICULTURAL RESEARCH SERVICE
FACILITIES ENGINEERING BRANCH
5106 SUNNYSIDE AVENUE
BELTSVILLE, MD 20705-5100

SHEET EY101
170 OF 176

J:\greenwood\2025 Jobs\5825 USDA Sugarcane Research Lab Houma LA\07 Working Folder\Elec\EY101.dwg
May 20, 2026 - 9:05am

GENERAL NOTES

1. CONTRACTOR SHALL PROVIDE A COMPLETE AND FULLY OPERATIONAL ELECTRONIC SECURITY SYSTEM (ESS), ACCESS CONTROL SYSTEM (ACS), AND CLOSED-CIRCUIT TELEVISION SYSTEM (CCTV) AS INDICATED ON THESE DRAWINGS AND DIVISION 28 SPECIFICATIONS.
2. THESE DRAWINGS ARE DIAGRAMMATIC IN NATURE AND ARE INTENDED TO INDICATE THE GENERAL ARRANGEMENT OF DEVICES AND SCOPE OF WORK ONLY. EXACT DEVICE LOCATIONS, CONDUIT ROUTING, AND INSTALLATION DETAILS SHALL BE COORDINATED WITH THE APPROPRIATE SYSTEM INTEGRATOR/VENDOR PRIOR TO BEGINNING WORK.
3. SHOP DRAWINGS SHOWING EXACT EQUIPMENT TO BE INSTALLED AND POINT TO POINT WIRING SHALL BE SUBMITTED PRIOR TO BEGINNING WORK FOR EACH SYSTEM.
4. CONTRACTOR SHALL COORDINATE ALL REQUIREMENTS FOR IP-BASED SYSTEMS WITH THE CONTRACTING OFFICER PRIOR TO BEGINNING WORK.
5. SEE DETAIL 2/E-502 FOR TYPICAL ACCESS CONTROLLED DOOR REQUIREMENTS. COORDINATE EXACT REQUIREMENTS WITH ACCESS CONTROL VENDOR PRIOR TO INSTALLATION.
6. THE CCTV SYSTEM BASIS OF DESIGN IS AN AV COSTAR OR AVILILON SYSTEM. ALL CCTV COMPONENTS SHALL BE BAA COMPLIANT.

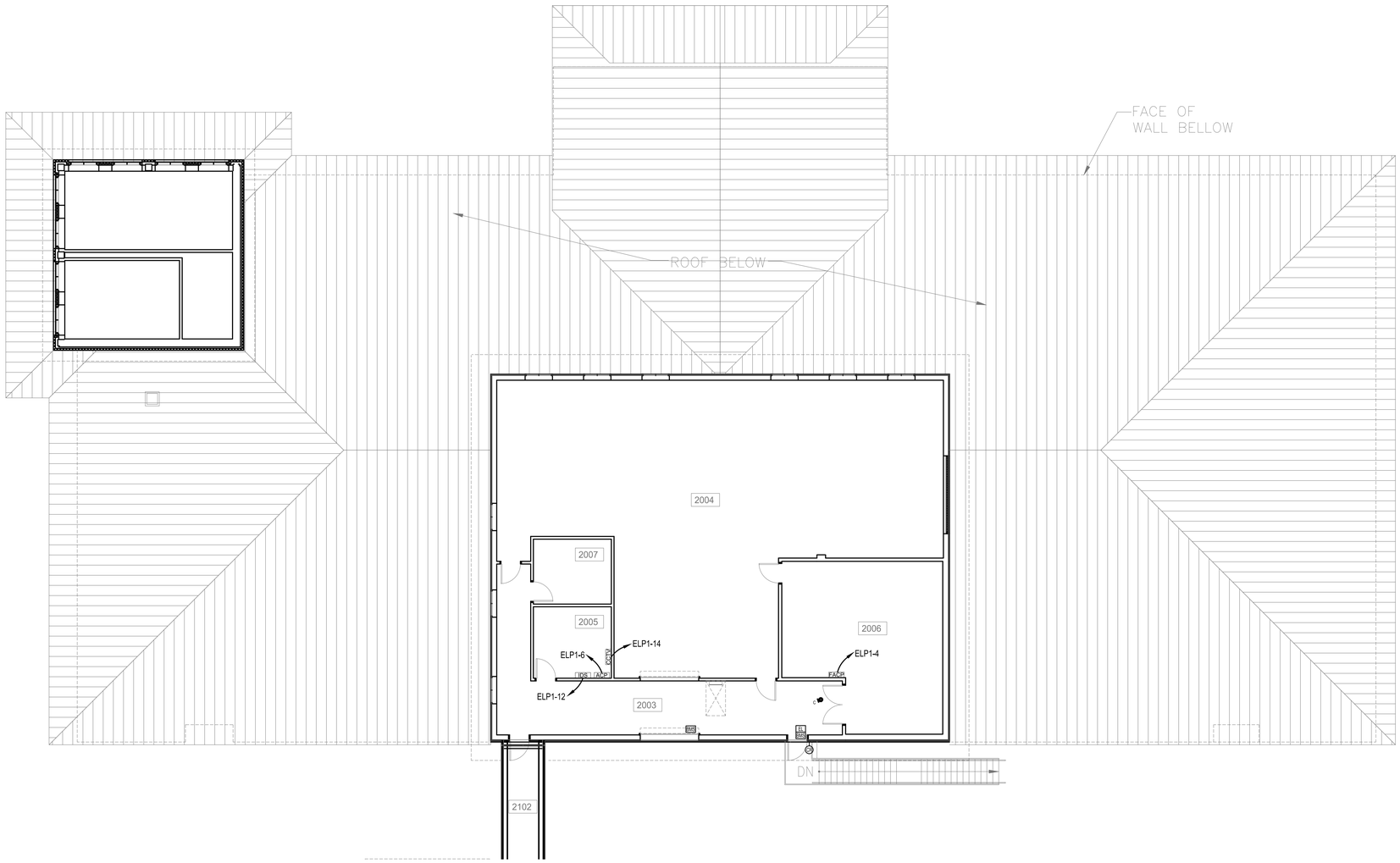

1 EY102 SECOND FLOOR SPECIAL SYSTEMS PLAN
SCALE: 1/8"=1'-0"

PLAN NORTH TRUE NORTH

NO.	DATE	BY	DESCRIPTION

REVISIONS

Johnson McAdams
ARCHITECTS ENGINEERS PLANNERS SURVEYING MANAGEMENT
P.O. BOX 515, GREENWOOD, MISSISSIPPI - 38602-0515

A-E FIRM	USDA
PROJECT MANAGER REH	EPM WN
DESIGNER BTD	PPM XXX
CHECKED BY BTD	SAFETY & HEALTH CM
JOB # 5825	REAL PROPERTY JS

USDA Agricultural Research Service

USDA AGRICULTURAL RESEARCH SERVICE
SUGARCANE RESEARCH LABORATOR
HOUMA, LOUISIANA

SECOND FLOOR SPECIAL SYSTEMS PLAN

PROJECT NO. XXX
DATE 05/20/2026

AGRICULTURAL RESEARCH SERVICE
FACILITIES ENGINEERING BRANCH
5106 SUNNYSIDE AVENUE
BELTSVILLE, MD 20705-5100

SHEET EY102
171 OF 176

J:\greenwood\2025 Jobs\5825 USDA Sugarcane Research Lab Houma LA\07 Working Folder\Elec\EY101.dwg
May 20, 2026 - 9:05am

KEYED NOTES

1. 500kW/625kVA DIESEL GENERATOR SET W/ 1700 GALLON SUB-BASE TANK LOCATED IN EXISTING GENERATOR LOCATION. SEE ED601 AND E-601 FOR MORE INFORMATION. SEE E-502 AND STRUCTURAL DRAWINGS FOR PAD DETAILS.
2. THE CONTRACTOR SHALL ROUTE (2) 2"C. AND (3) 1"C. TO PULLBOX 2 FOR FUTURE PROVISIONS. POWER FOR SITE LIGHTING AND FLAG POLE LIGHTING ALSO UTILIZE PULLBOXES.
3. THE CONTRACTOR SHALL PROVIDE A 400/3/3R HEAVY DUTY DISCONNECT FOR CHILLER. SEE E-601 FOR CIRCUITRY INFORMATION. ALL EXTERIOR CONDUIT SHALL BE ROUTED ABOVE GROUND AND SECURED WITH FREE STANDING CONDUIT RACKS.

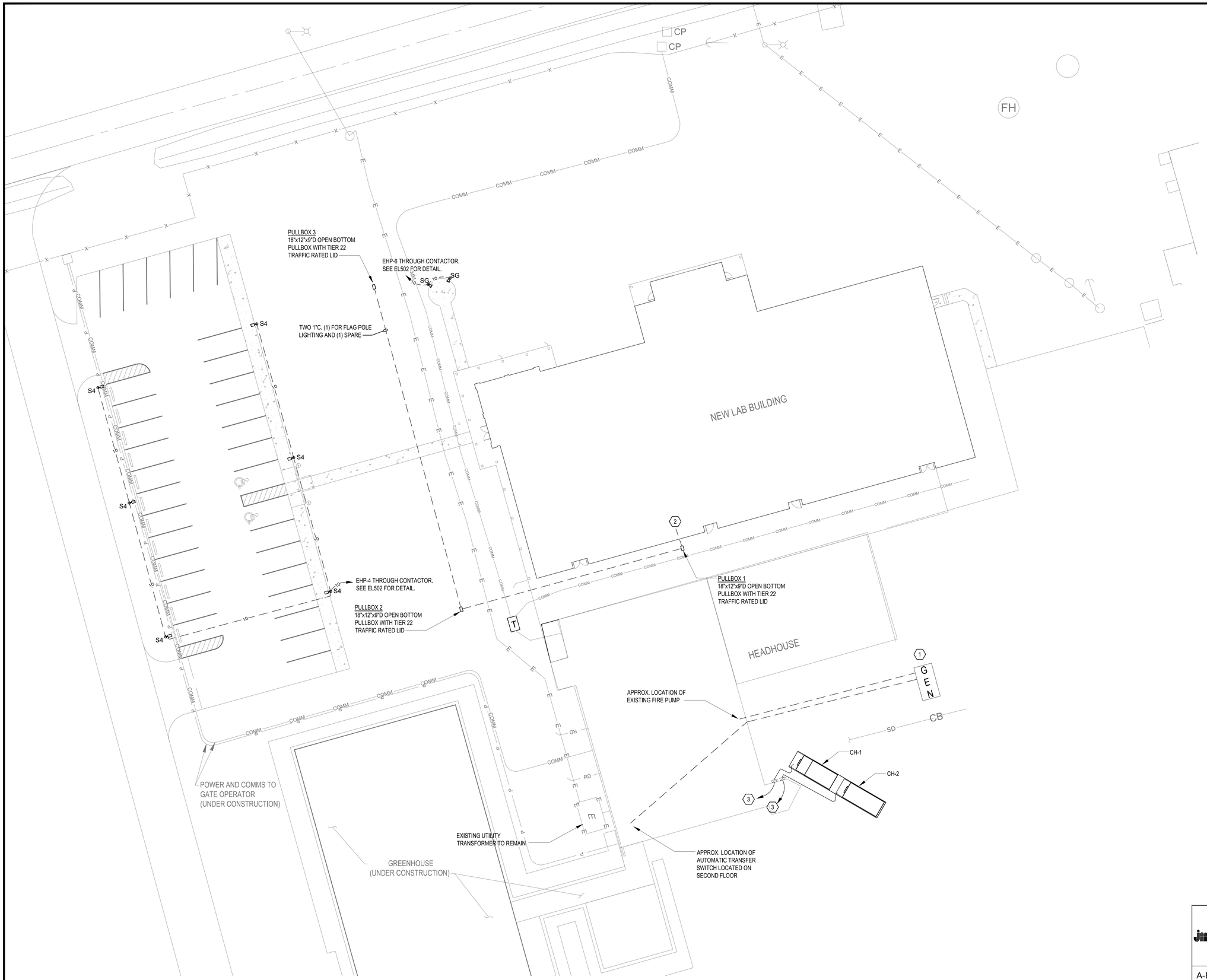

NORTH

1 / ES101 ELECTRICAL SITE PLAN

SCALE: 1" = 20'

0 20' 40' 60'

SCALE: 1"=20'-0"

NO.	DATE	BY	DESCRIPTION
			REVISIONS

A-E FIRM	USDA
PROJECT MANAGER	REH
EPM	WN
DESIGNER	BTD
PPM	XXX
CHECKED BY	DRL
SAFETY & HEALTH	CM
JOB #	5825
REAL PROPERTY	JS

USDA Agricultural Research Service

USDA AGRICULTURAL RESEARCH SERVICE
SUGARCANE RESEARCH LABORATORY
HOUMA, LOUISIANA

ELECTRICAL SITE PLAN

PROJECT NO.	XXX
DATE	05/20/2026

AGRICULTURAL RESEARCH SERVICE
FACILITIES ENGINEERING BRANCH
5106 SUNNYSIDE AVENUE
BELTSVILLE, MD 20705-5100

SHEET ES101

JUSTIN T. DUNN
REGISTERED PROFESSIONAL ENGINEER
20768
05/20/26
STATE OF MISSISSIPPI

J:\Ignemanock\2025 Jobs\5825 USDA Sugarcane Research Lab Houma LA\07 Working Folder\Dwg\ES101.dwg
May 20, 2026 - 9:05am

GENERAL NOTES

1. COORDINATE ALL TELECOMMUNICATIONS WORK WITH THE CONTRACTING OFFICER AND USDA IT PERSONNEL PRIOR TO BEGINNING WORK.
2. COORDINATE FINAL TELECOMMUNICATION OUTLET LOCATIONS WITH OFFICE FURNITURE PLAN PRIOR TO ROUGH-IN.
3. PROVIDE DETAILED TELECOMMUNICATION POINT TO POINT WIRING DIAGRAMS PER SPECIFICATION 27 10 00.

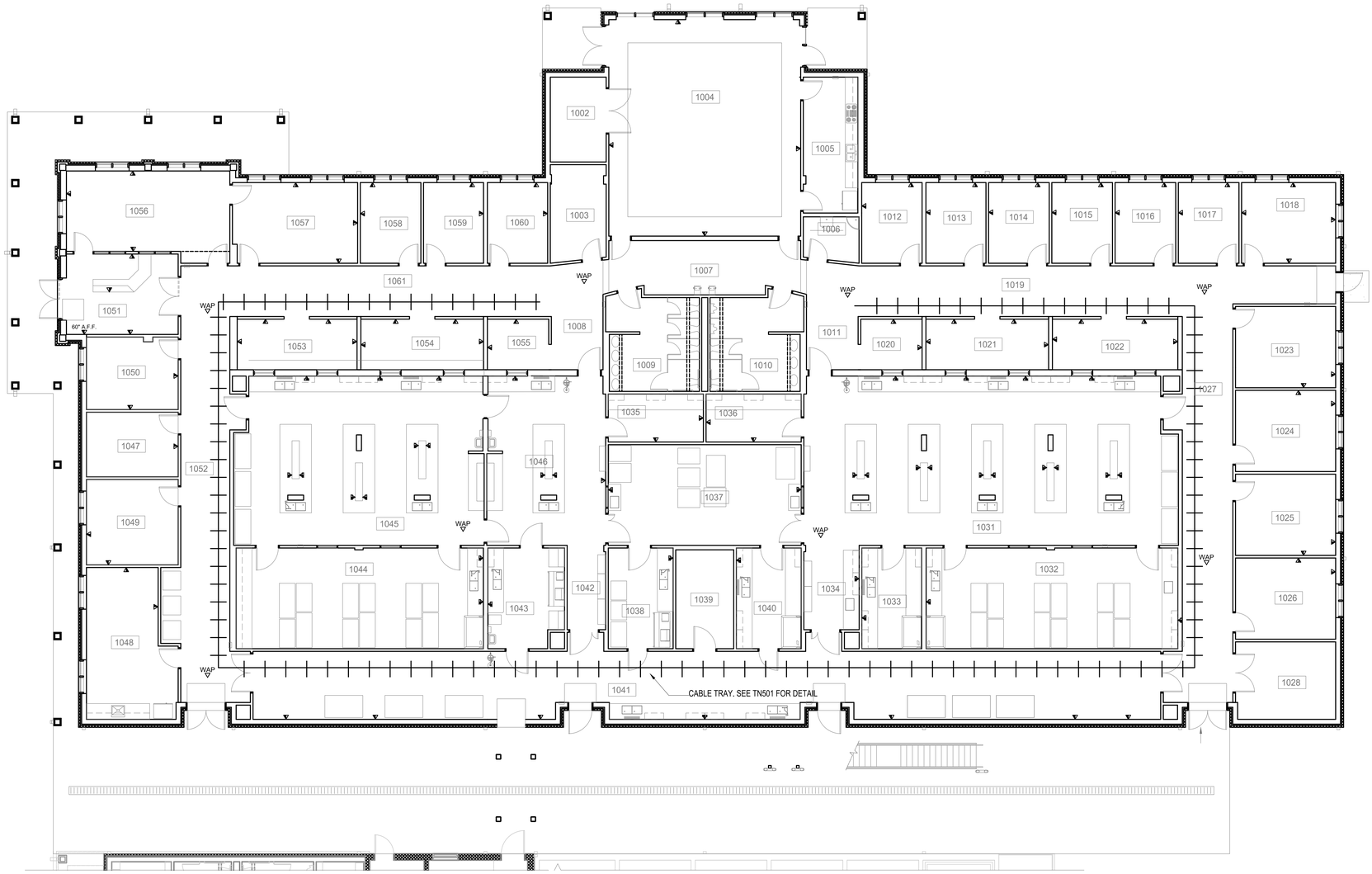

1 EY101 FIRST FLOOR TELECOMMUNICATIONS PLAN
SCALE: 1/8"=1'-0"

PLAN NORTH TRUE NORTH

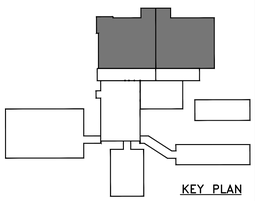

KEY PLAN

NO.	DATE	BY	DESCRIPTION

REVISIONS

A-E FIRM	USDA
PROJECT MANAGER REH	EPM WN
DESIGNER BTD	PPM XXX
CHECKED BY BTD	SAFETY & HEALTH CM
JOB # 5825	REAL PROPERTY JS

USDA Agricultural Research Service

USDA AGRICULTURAL RESEARCH SERVICE
SUGARCANE RESEARCH LABORATOR
HOUMA, LOUISIANA

FIRST FLOOR TELECOMM PLAN

PROJECT NO. XXX
DATE 05/20/2026

AGRICULTURAL RESEARCH SERVICE
FACILITIES ENGINEERING BRANCH
5106 SUNNYSIDE AVENUE
BELTSVILLE, MD 20705-5100

SHEET TN101
173 OF 176

J:\greenwood\2025 Jobs\5825 USDA Sugarcane Research Lab Houma LA\07 Working Folder\Elec\TN101.dwg
May 20, 2026 - 9:05am

GENERAL NOTES

1. COORDINATE ALL TELECOMMUNICATIONS WORK WITH THE CONTRACTING OFFICER AND USDA IT PERSONNEL PRIOR TO BEGINNING WORK.
2. PROVIDE DETAILED TELECOMMUNICATION POINT TO POINT WIRING DIAGRAMS PER SPECIFICATION 27 10 00.

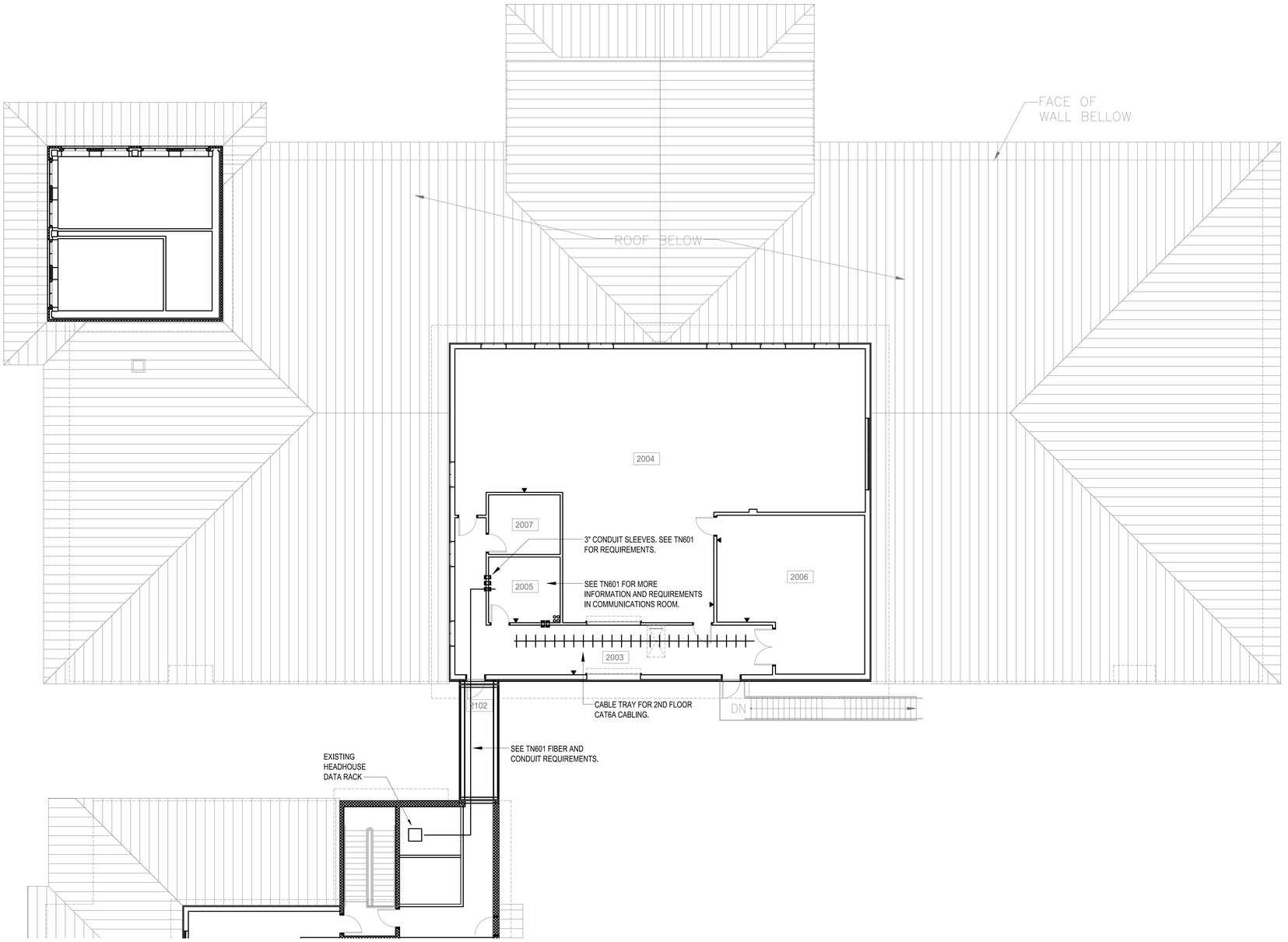

1 EY102 SECOND FLOOR TELECOMMUNICATIONS PLAN
SCALE: 1/8"=1'-0"

PLAN NORTH TRUE NORTH

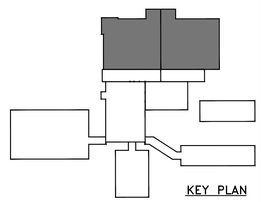

KEY PLAN

NO.	DATE	BY	DESCRIPTION

REVISIONS

Johnson McAdams
ARCHITECTS/ENGINEERS PLANNING SURVEYING MANAGEMENT
P.O. BOX 515, GREENWOOD, MISSISSIPPI 38922-0515

A-E FIRM	USDA
PROJECT MANAGER REH	EPM WN
DESIGNER BTD	PPM XXX
CHECKED BY BTD	SAFETY & HEALTH CM
JOB # 5825	REAL PROPERTY JS

USDA Agricultural Research Service

USDA AGRICULTURAL RESEARCH SERVICE
SUGARCANE RESEARCH LABORATOR
HOUMA, LOUISIANA

SECOND FLOOR TELCOMM PLAN

PROJECT NO.	AGRICULTURAL RESEARCH SERVICE FACILITIES ENGINEERING BRANCH 5106 SUNNYSIDE AVENUE BELTSVILLE, MD 20705-5100	SHEET
XXX		TN102
DATE 05/20/2026		174 OF 176

J:\greenwood\2025 Jobs\5825 USDA Sugarcane Research Lab Houma LA\07 Working Folder\Elec\TN101.dwg
May 20, 2026 - 9:05am

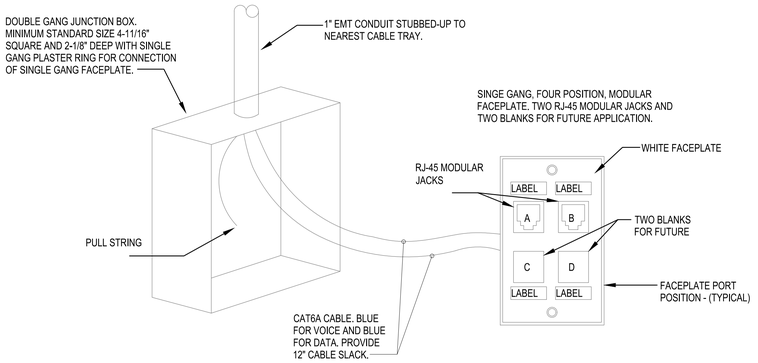

1 TN501 TYPICAL 2-PORT DATA OUTLET DETAIL

SCALE: NONE

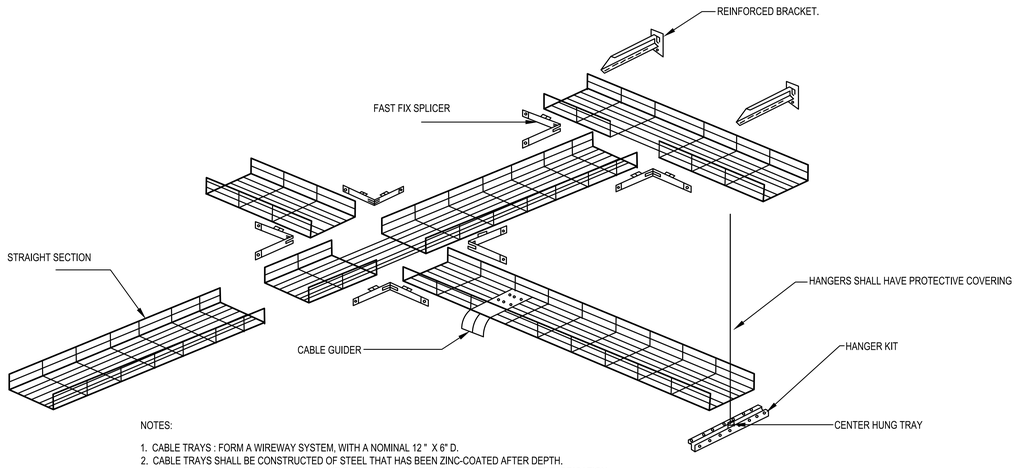

NOTES:

1. CABLE TRAYS : FORM A WIREWAY SYSTEM, WITH A NOMINAL 12 " X 6" D.
2. CABLE TRAYS SHALL BE CONSTRUCTED OF STEEL THAT HAS BEEN ZINC-COATED AFTER DEPTH.
3. CABLE TRAYS SHALL INCLUDE SPLICES AND END PLATES, DROPOUTS, AND MISCELLANEOUS FABRICATION.
4. EDGES, FITTING AND HARDWARE SHALL BE FINISHED FREE FROM BURRS AND SHARP HARDWARE.
5. PROVIDE BASKET-TYPE CABLE TRAY SIZED AS INDICATED ON DRAWINGS WITH MAXIMUM WIRE MESH SPACING OF 2 BY 4 EDGES. 6. THREADED HANGERS SHALL HAVE PROTECTIVE COVERING TO PREVENT CABLES BEING INSTALLED IN THE TRAY FROM STRIPPING THE INCH.
7. PROVIDE #4 GREEN INSULATED BOND CONNECTION BETWEEN TRAY JOINTS AND BOND TO ALL SECTIONS OF THE TRAY. CONDUCTORS MUST BE DOUBLE LUGGED AND SHOULD BE TREATED AT THE CONNECTION WITH AN ANTI-OXIDANT SUCH AS ELOX OR INSUALTION.
8. CABLE TRAY SHALL BE USED FOR TELECOMMUNICATION CABLING ONLY.

2 TN501 CABLE TRAY DETAIL

SCALE: NONE

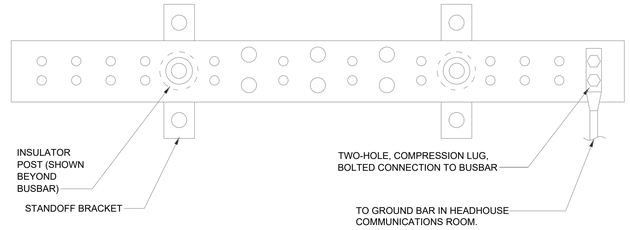

NOTES:

1. SBB SHALL BE 2" WIDE AND 1/4" THICK COPPER BUSBAR.
2. LENGTH OF EACH SBB SHALL BE AS REQUIRED TO TERMINATE ALL GROUNDING AND BONDING CONNECTIONS REQUIRED AT EACH SBB PLUS AN ADDITIONAL 25% FUTURE SPARE CONNECTIONS ON EACH SBB. IN NO CASE SHALL THE LENGTH OF THE SBB BE LESS THAN 12".
3. SBB SHALL BE TIA-607-D COMPLIANT AND CONFORM TO BICSI RECOMMENDATIONS.
4. SBB SHALL COMPLY WITH NEMA STANDARDS.
5. SBB SHALL ACCEPT TWO HOLE COMPRESSION LUGS WITH 5/16" OR 7/16" BOLT HOLES.
6. BONDING CONDUCTORS TERMINATING AT THE SBB SHALL HAVE A MINIMUM INSIDE BENDING RADIUS OF 8 INCHES.

3 TN501 TYPICAL SBB DETAIL

SCALE: NONE

Johnson, Mirmiran & Thompson, Inc.
ENGINEERS, ARCHITECTS, PLANNERS, SURVEYORS, MANAGEMENT
P.O. BOX 515, GREENWOOD, MISSISSIPPI - (662) 455-6612

NO.	DATE	BY	DESCRIPTION

REVISIONS

USDA Agricultural Research Service

USDA AGRICULTURAL RESEARCH SERVICE
SUGARCANE RESEARCH LABORATOR
HOUMA, LOUISIANA

TELECOMMUNICATIONS DETAILS

A-E FIRM	USDA
PROJECT MANAGER	REH
EPM	WN
DESIGNER	BTD
PPM	XXX
CHECKED BY	BTD
SAFETY & HEALTH	CM
JOB #	5825
REAL PROPERTY	JS

PROJECT NO. XXX
DATE 05/20/2026

AGRICULTURAL RESEARCH SERVICE
FACILITIES ENGINEERING BRANCH
5106 SUNNYSIDE AVENUE
BELTSVILLE, MD 20705-5100

SHEET TN501
175 OF 176

BRADEN T. DUKE
REGISTERED PROFESSIONAL ENGINEER
05/20/26
35781
STATE OF MISSISSIPPI

J:\Greenwood\2025 Jobs\5825 USDA Sugarcane Research Lab Houma LA\07 Working Folder\Dwg\TN501.dwg
May 20, 2026 - 8:56am

GENERAL NOTES

1. COORDINATE ALL TELECOMMUNICATIONS WORK WITH THE CONTRACTING OFFICER AND USDA IT PERSONNEL PRIOR TO BEGINNING WORK.
2. PROVIDE DETAILED TELECOMMUNICATION POINT TO POINT WIRING DIAGRAMS PER SPECIFICATION 27 10 00.
3. INSTALL ALL CAT6 CABLING IN A NEAT AND WORKMANLIKE MANNER. PROVIDE PROPER SUPPORT AND SECUREMENT OF ALL CABLING. LOOSE OR UNSECURED CABLES SHALL NOT BE PERMITTED.
4. COORDINATE ALL WALL AND CEILING/FLOOR PENETRATIONS. PROPERLY SEAL ALL PENETRATIONS AFTER CONDUIT SLEEVES ARE INSTALLED.

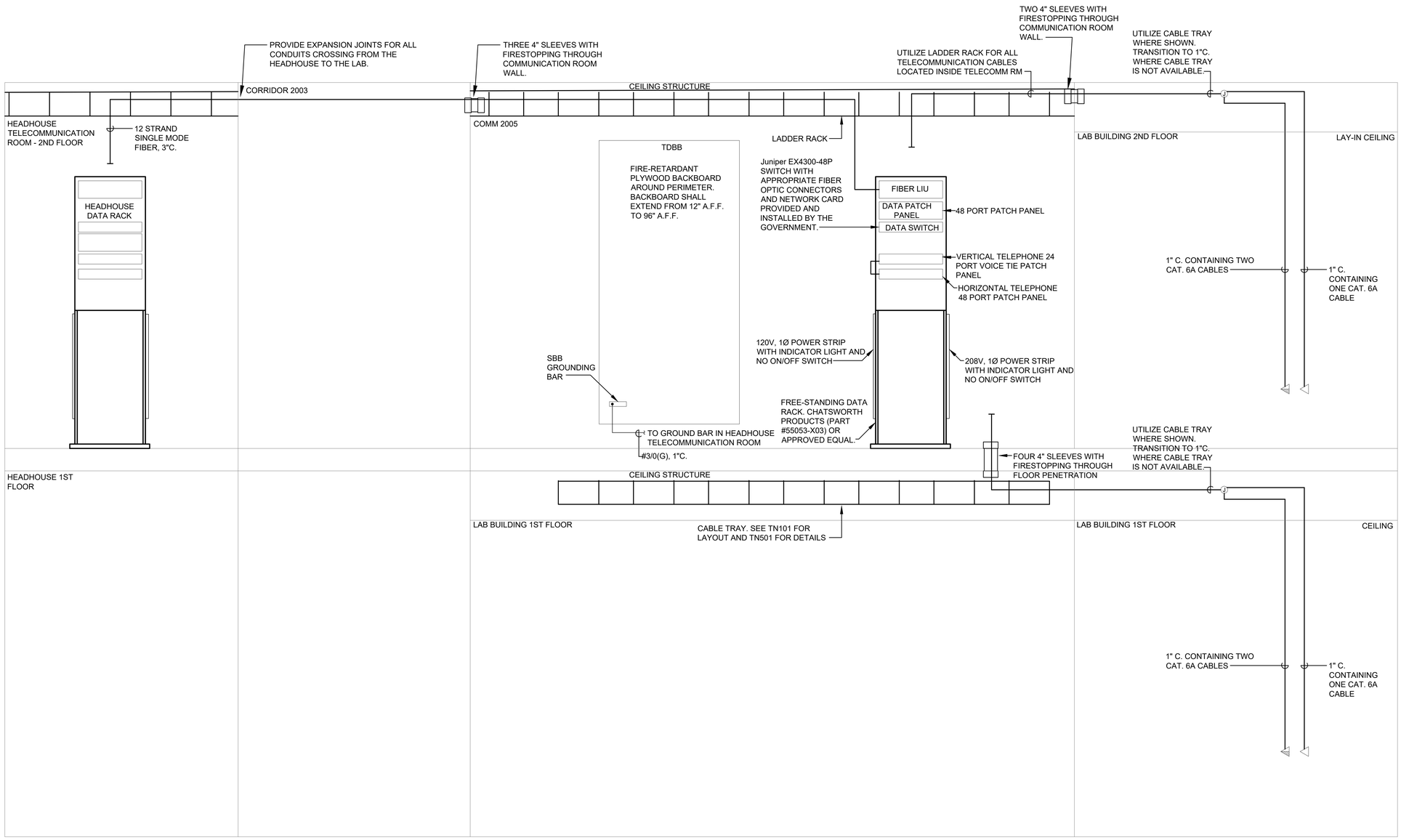

1 TN601 TELECOMMUNICATIONS RISER DIAGRAM
SCALE: NONE

NO.	DATE	BY	DESCRIPTION

REVISIONS

Johnson McAdams

A-E FIRM	USDA
PROJECT MANAGER REH	EPM WN
DESIGNER BTD	PPM XXX
CHECKED BY BTD	SAFETY & HEALTH CM
JOB # 5825	REAL PROPERTY JS

USDA Agricultural Research Service

USDA AGRICULTURAL RESEARCH SERVICE
SUGARCANE RESEARCH LABORATOR
HOUMA, LOUISIANA

TELECOMMUNICATIONS RISER DIAGRAM

PROJECT NO. XXX
DATE 05/20/2026

AGRICULTURAL RESEARCH SERVICE
FACILITIES ENGINEERING BRANCH
5106 SUNNYSIDE AVENUE
BELTSVILLE, MD 20705-5100

SHEET TN601
176 OF 176

J:\greenwood\2025 Jobs\5825 USDA Sugarcane Research Lab Houma LA\07 Working Folder\Elec\TN601.dwg
May 20, 2026 - 9:05am