13-12

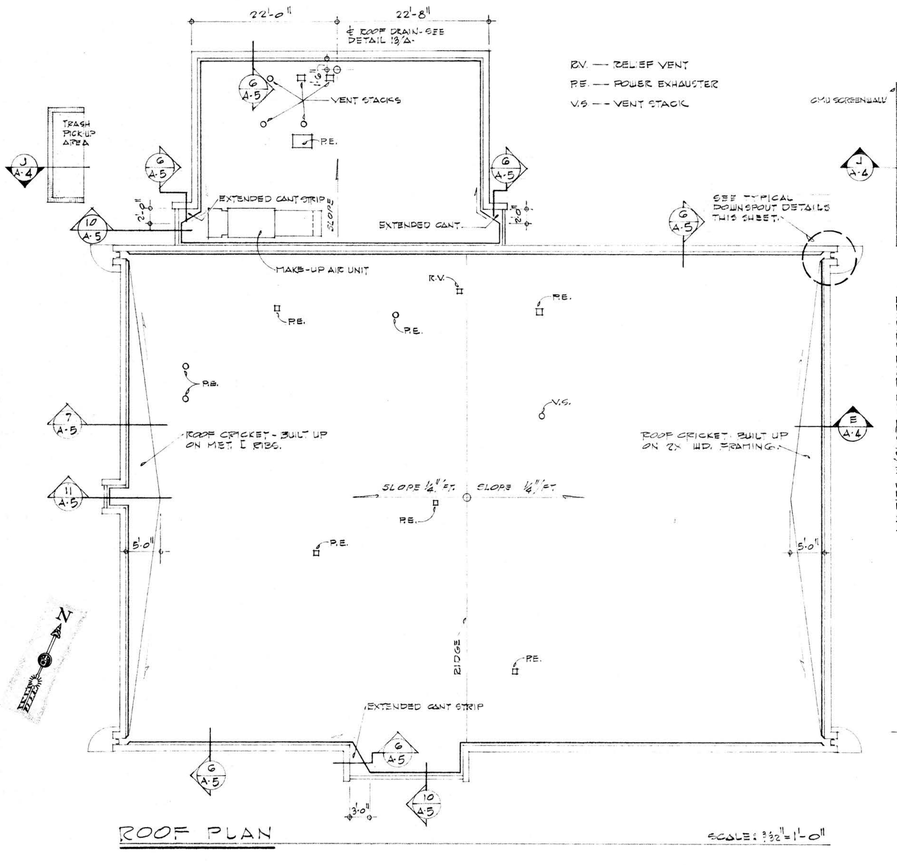

ROOF PLAN

SCALE: 3/32" = 1'-0"

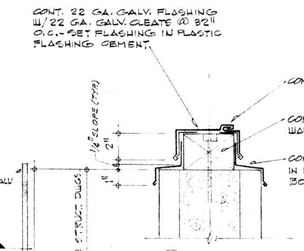

5 TYP. PARAPET FLASHING

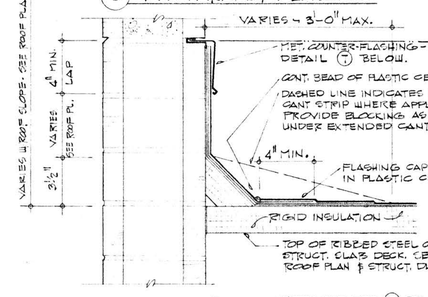

DETAIL 6

NOTE: SEE DET. 7 BELOW FOR OTHER APPLICABLE NOTES.

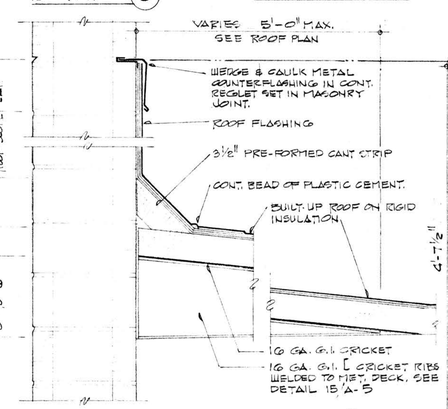

DETAIL 7

NOTE: SEE DETAIL 6 ABOVE FOR OTHER APPLICABLE NOTES.

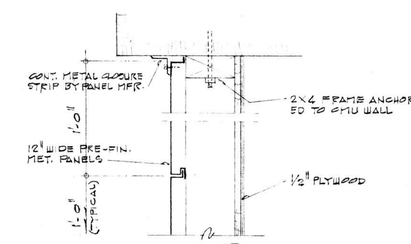

DETAIL 9

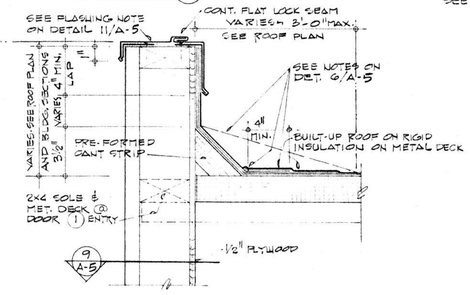

DETAIL 10

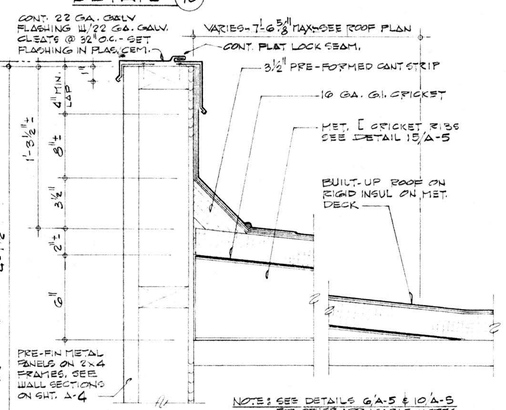

NOTE: SEE DETAILS 6/A-5 & 10/A-5 FOR OTHER APPLICABLE NOTES.

DETAIL 11

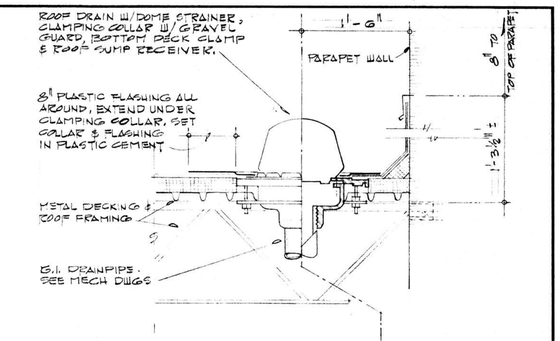

13 ROOF DRAIN DETAIL

SCALE: 1" = 1'-0"

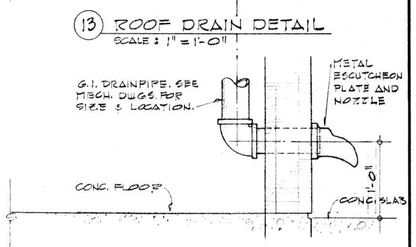

14 DRAIN OUTLET DETAIL

SCALE: 1" = 1'-0"

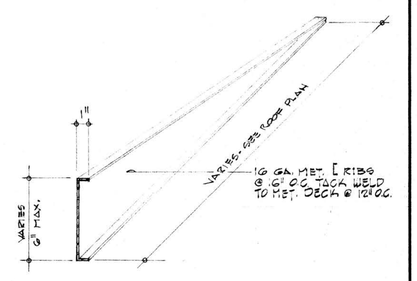

15 CRICKET RIB DETAIL

SCALE: 1" = 1'-0"

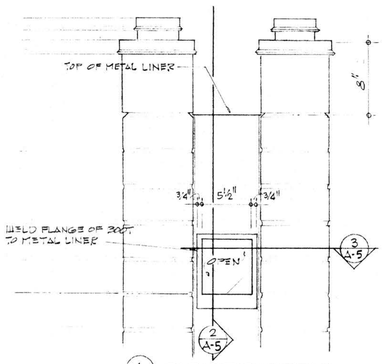

1 ELEVATION DETAIL

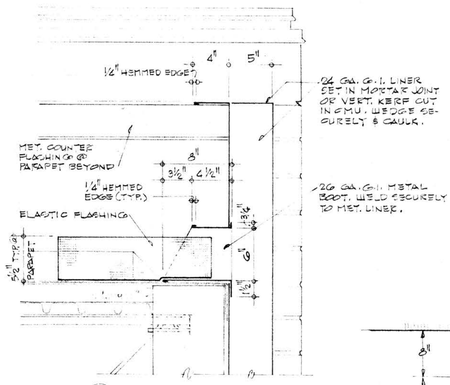

2 SECTION @ BOOT

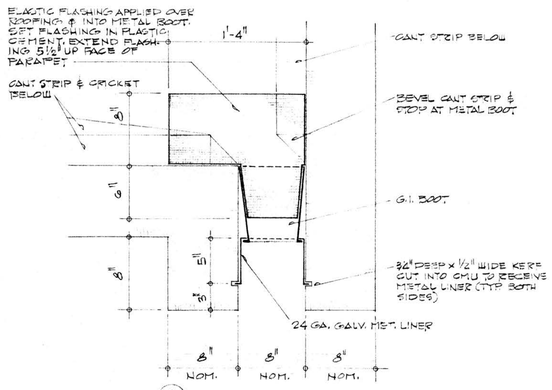

3 PLAN DETAIL

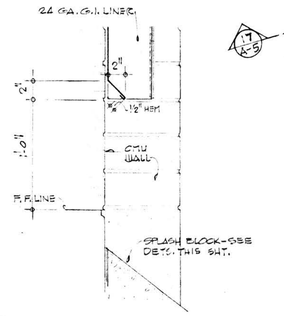

4 SECTION @ DOWNSPOUT

DOWNSPOUT DETAILS

SCALE: 1 1/2" = 1'-0"

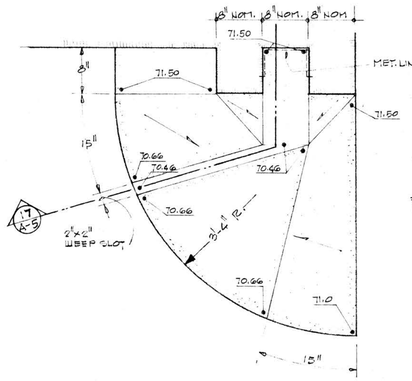

PLAN

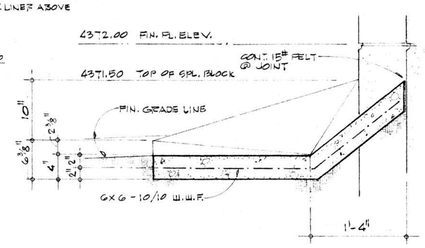

SECTION 17

SPLASH BLOCK DETAILS

SCALE: 1" = 1'-0"

NOTE:
SPLASHBLOCK DETAIL IS FOR SPLASHBLOCKS @ N.E. & S.W. CORNERS OF MAIN BUILDING. SPLASHBLOCKS FOR N.W. & S.E. CORNERS ARE SIM. & OPPOSITE

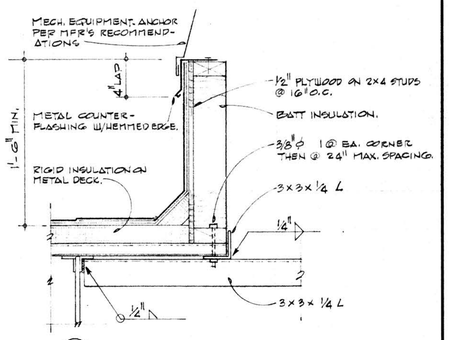

16 ROOF CURB DETAILS

SCALE: 1 1/2" = 1'-0"

ROOF AND CEILING DETAILS

SCALE: 3/16 FULL SIZE

DEPARTMENT OF THE INTERIOR BUREAU OF INDIAN AFFAIRS WASHINGTON D. C.	DIVISION OF PLANT DESIGN & CONSTRUCTION ALBUQUERQUE NEW MEXICO ROBERT A. DUDLEY CHIEF	REVISIONS	PROJECT NUMBER LC 51-119 BLACKFEET JAIL BROWNING, MONTANA	JAIL BUILDING ROOF PLAN AND DETAILS	BIA PDC	DRAWN BY E. CHEN CHECKED BY J.D.C. DRAWING NO. T-66	SHEET NO. A-5 DATE JUNE 19, 1967	SEQUENCE NO. 12