IF THIS SHEET IS NOT 30" X42" FULL SIZE, USE GRAPHIC SCALE.

VETERANS ADMINISTRATION MEDICAL CENTER
1 MEDICAL CENTER DRIVE
CLARKSBURG, WV 26301

PROJECT NO: 540-22-103

PROJECT TITLE: REPLACE BOILER #3

BID DOCUMENTS

MAY 20, 2025

SITE MAP

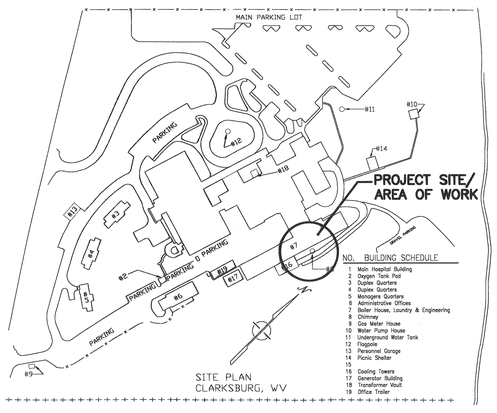

SITE PLAN
SCALE: NONE

VICINITY MAP

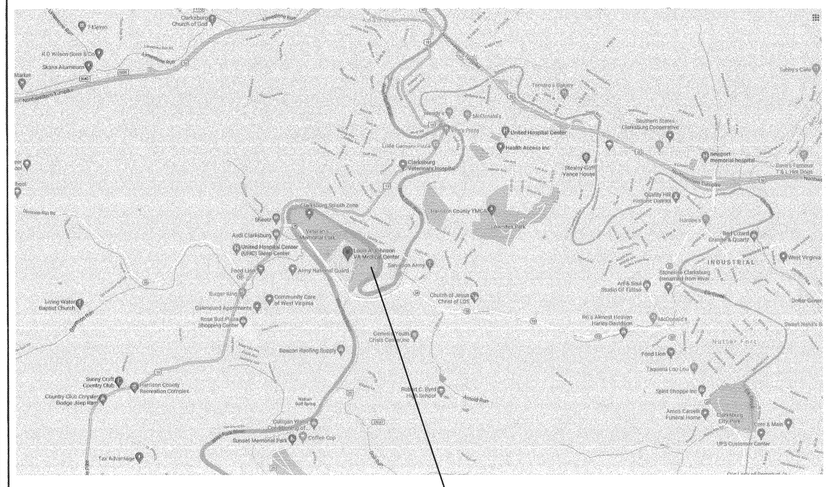

INDEX OF DRAWINGS

SHEET NO	DWG NO	DRAWING TITLE
1 OF 25	CS001	COVER SHEET
2 OF 25	S001	STRUCTURAL NOTES
3 OF 25	S101	PARTIAL FRAMING PLANS-EXISTING CONDITION
4 OF 25	S102	PARTIAL FRAMING PLANS-NEW WORK
5 OF 25	S201	WALL SECTIONS FOR EXISTING CONDITION
6 OF 25	S202	WALL SECTIONS FOR NEW BOILER
7 OF 25	AE100	TEMPORARY BOILER & CONTROL ROOM/OFFICE SITE PLAN
8 OF 25	AE101	BOILER ROOM FLOOR PLANS
9 OF 25	AE102	DOOR, ELEVATIONS AND DETAILS
10 OF 25	M001	COVER SHEET-MECHANICAL
11 OF 25	MD101	BOILER ROOM FLOOR PLAN-PIPING-DEMOLITION WORK
12 OF 25	MP101	BOILER ROOM & ROOF PLAN-PIPING-NEW WORK
13 OF 25	MP102	PHASING PLAN
14 OF 25	MJ101	SCHEDULES
15 OF 25	MI101	CONTROLS
16 OF 25	MI102	CONTROLS
17 OF 25	MR101	SCHEMATIC PIPING DIAGRAMS
18 OF 25	MR102	SCHEMATIC PIPING DIAGRAMS
19 OF 25	MK101	DETAILS
20 OF 25	MK102	DETAILS
21 OF 25	MK103	DETAILS
22 OF 25	E001	COVER SHEET-ELECTRICAL
23 OF 25	EP101	BOILER ROOM FLOOR PLAN-DEMOLITION & NEW WORK
24 OF 25	EP102	ELECTRICAL SITE PLAN
25 OF 25	ES101	RISER DIAGRAMS

APPLICABLE CODE

2018 INTERNATIONAL BUILDING CODE (IBC)
NFPA 101: LIFE SAFETY CODE 2021
NFPA 13: STANDARD FOR THE INSTALLATION OF SPRINKLER SYSTEMS, 2022
NFPA 70: NATIONAL ELECTRICAL CODE, 2020
ASHRAE 62.1: VENTILATION FOR ACCEPTABLE INDOOR AIR QUALITY, 2020
ASHRAE 90.1 ENERGY STANDARD FOR BUILDINGS EXCEPT LOW RISE RESIDENTIAL BUILDINGS, 2021
NFPA NATIONAL FIRE CODES (EXCEPT NFPA 5000 & 900)
VA SEISMIC DESIGN REQUIREMENTS, H-18-8
OSHA STANDARDS
BUILDING CODE REQUIREMENTS FOR REINFORCED CONCRETE, AMERICAN CONCRETE INSTITUTE AND COMMENTARY (ACI 318)
EPA 2005
VHA BOILER AND ASSOCIATED PLANT SAFETY DEVICES TESTING MANUAL, FIFTH EDITION, 2018
VA DESIGN AND CONSTRUCTION PROCEDURES (PG-18-3)
PHYSICAL SECURITY DESIGN MANUAL FOR VA FACILITIES, 2023
VA FIRE PROTECTION DESIGN MANUAL, 2021
VHA BOILER PLANT SAFETY DEVICES TESTING MANUAL, THIRD EDITION, 2008
AMERICAN SOCIETY OF MECHANICAL ENGINEERS (ASME) BOILER AND PRESSURE VESSEL CODE, 2017
NATIONAL FIRE PROTECTION ASSOCIATION (NFPA) 85 BOILER AND COMBUSTION SYSTEMS HAZARDS CODE, 2019
NFPA 70E STANDARD FOR ELECTRICAL SAFETY IN THE WORKPLACE, 2020
VA BOILER AND BOILER PLANT OPERATION DESIGN MANUAL, 2018
VA DESIGN MANUAL: STEAM, HEATING HOT WATER, AND OUTSIDE DISTRIBUTION SYSTEMS DESIGN MANUAL, 2022

NO.	DESCRIPTION	DATE
	30% SUBMISSION	02-23-2022
	30% SUBMISSION (RESUBMISSION)	12-30-2022
	60% SUBMISSION	11-24-2023
	100% SUBMISSION	03-27-2024
	100%-2ND SUBMISSION	05-14-2024
	BID DOCUMENTS	05-20-2025

CONSULTANTS:

Architectural:
STATE OF WEST VIRGINIA
FRANK V. STURGEON
No. 4866
REGISTERED
ARCHITECT
SIGNATURE: 5-20-25

ARCHITECT/ENGINEERS:

A DESIGN GROUP, LLC
ART - ARCHITECTURE - ENGINEERING
2787 HILL ROAD
VIENNA, VA 22181

FRANK V. STURGEON, AIA

AMBRISH RASTOGI, PE

703.938.5226
FRANK@ADG10.COM

Drawing Title: **COVER SHEET**

Approved: Project Director

Project Title: Replace Boiler #3

Location: Clarksburg WV Medical Center

Date: 05/20/2025 | Checked: FVS | Drawn: AM

Project Number: **540-22-103**

Building Number: NO. 1

Drawing Number: **CS001**

Dwg. 1 of 25

Office of Construction and Facilities Management

Department of Veterans Affairs

VA FORM 08-6231

IF THIS SHEET IS NOT 30" X42" FULL SIZE, USE GRAPHIC SCALE.

one and one half inches = one foot | one inch = one foot | three quarters inch = one foot | one half inch = one foot | three eighths inch = one foot | one quarter inch = one foot | one eighth inch = one foot

I. GENERAL

1) THE CONTRACTOR SHALL COORDINATE ALL DIMENSIONS AND ELEVATIONS SHOWN ON THESE DRAWINGS WITH THE ARCHITECTURAL AND OTHER TRADES DRAWINGS. THE CONTRACTOR SHALL IMMEDIATELY NOTIFY THE ARCHITECT /ENGINEER OF ANY DISCREPANCIES OR OMISSIONS PRIOR TO CONSTRUCTION.
   IF INFORMATION SHOWN ON THESE DRAWINGS ARE NOT CLEAR OR MISSING, THE CONTRACTOR SHALL SUBMIT REQUEST FOR INFORMATION (RFI) IN WRITING. THE CONTRACTOR SHALL NOT START/ PROCEED WITH DEMOLITION, FABRICATION & CONSTRUCTION UNTIL AN ADEQUATE RESPONSE TO THE RFI FROM ARCHITECT/ ENGINEER IS RECEIVED IN WRITING.
2) THE CONTRACTOR SHALL BE RESPONSIBLE FOR PROVIDING TEMPORARY BRACING AND SHORING, AS REQUIRED, TO INSURE VERTICAL AND LATERAL STABILITY OF THE ENTIRE STRUCTURE OR PORTION THEREOF DURING CONSTRUCTION. THE DESIGN PROCEDURES SHALL CONFORM TO ALL GOVERNING CODES AND SAFETY REQUIREMENTS. TEMPORARY BRACING AND SHORING SHALL BE IN CONFORMANCE WITH OSHA REGULATIONS.
3) ALL VERTICAL ELEMENTS (WALLS, COLUMNS) ARE DESIGNED AS LATERALLY BRACED BY THE FLOOR AND ROOF SYSTEMS. CONTRACTOR SHALL ENSURE THAT WALLS ARE ADEQUATELY BRACED DURING CONSTRUCTION.
4) SUBMITTALS
   a. SUBMITTALS SHALL BE PROVIDED TO THE CONTRACTOR, ARCHITECT, STRUCTURAL ENGINEER, AND THE OWNER. THE GENERAL CONTRACTOR SHALL REVIEW AND STAMP ALL SUBMITTALS TO INDICATE A STATEMENT OF COMPLIANCE OR NON-COMPLIANCE WITH THE CONTRACT DOCUMENTS. SUBMITTALS WITHOUT THIS STATEMENT MAY BE RETURNED FOR RESUBMITTAL.
   b. SUBMITTALS SHALL CLEARLY INDICATE THE REFERENCE CONTRACT DOCUMENTS WITH REVISION AND THE GENERAL CONTRACTOR SHALL VERIFY THAT THE LATEST CONTRACT DOCUMENTS HAVE BEEN USED FOR THE SUBMITTALS.
   c. SUBMITTALS REQUIRING A REGISTERED PROFESSIONAL ENGINEER'S SEAL OR REQUIRING SUPERVISION BY A REGISTERED PROFESSIONAL ENGINEER: THE ENGINEER SHALL HAVE AN ACTIVE REGISTRATION IN THE STATE IN WHICH THE PROJECT IS LOCATED.
   d. CONTRACT DRAWINGS SHALL NOT BE REPRODUCED FOR ANY SUBMITTAL.

II. CAST-IN-PLACE CONCRETE

1) ALL CONCRETE WORK SHALL BE IN ACCORDANCE WITH ACI 301, ACI 318 AND ACI 302, LATEST EDITION.
2) REINFORCING STEEL
   a. DEFORMED BILLET STEEL: ASTM A615 - GRADE 60
   b. WELDED WIRE FABRIC (WWF): ASTM A185
3) ALL REINFORCING SHALL BE DETAILED, FABRICATED AND PLACED IN ACCORDANCE WITH THE "MANUAL OF STANDARD PRACTICE FOR DETAILING CONCRETE STRUCTURES" (ACI-315). DETAILS OF REINFORCEMENT SHALL CONFORM TO ACI 318, ACI 315 AND CRSI STANDARDS.
4) REINFORCEMENT SPLICES SHALL BE LAP SPLICES WITH A MINIMUM LAP OF 48 BAR DIAMETERS UNLESS NOTED OTHERWISE.
5) CAST-IN-PLACE CONCRETE SHALL BE READY-MIX PER ASTM-C94. THE MIX SHALL BE PROPORTIONED WITH:
   a. PORTLAND CEMENT: ASTM C150
   b. AGGREGATES (3/4 IN MAXIMUM SIZE): ASTM C33
   c. NO CALCIUM CHLORIDE SHALL BE PERMITTED
   d. AIR ENTRAINMENT: ASTM C260
   e. WATER REDUCING ADMIXTURE: ASTM C494
   f. FLYASH CLASS F: 20% MAXIMUM BY WEIGHT: ASTM C618
   g. WATER, CLEAN AND POTABLE
6) RESTRICT THE ADDITION OF WATER AT THE JOB SITE. DO NOT ADD WATER WITHOUT THE APPROVAL OF THE GENERAL CONTRACTOR AND DO NOT EXCEED SLUMP LIMITATIONS. USE COLD WATER FROM THE TRUCK TANK AND REMIX TO ACHIEVE CONSISTENCY. THE REPORTS SHALL INDICATE HOW MUCH WATER WAS ADDED AT THE JOB SITE. CONCRETE SHALL BE PLACED WITHIN 90 MINUTES OF BATCH TIME.
7) PROVIDE LEAN CONCRETE UNDER FOUNDATIONS FOR ACCIDENTAL OVER EXCAVATIONS OF SOFT SPOTS AND TRENCHES.
8) PROVIDE CONTINUOUS MOISTURE TO CONCRETE IN ACCORDANCE WITH ACI 301 AND ACI 308. APPLY A 30% SOLIDS LIQUID MEMBRANE FORMING CHEMICAL CURING COMPOUND IN ACCORDANCE WITH ASTM C-309. LIQUID MEMBRANE MUST NOT ADVERSELY AFFECT SURFACE FOR BONDING OF FUTURE FINISHES.
9) CONCRETE COMPRESSIVE STRENGTH AT 28 DAY CURE, F'c = 3,500 PSI MIN
10) SLABS ON GRADE (REINFORCED) SHALL BE 4 IN THICK 6 X 6- W 1.4 x 1.4 WWF
11) LAP MESH 8 IN AT EACH DIRECTION. PLACE CONCRETE OVER VAPOR BARRIER WITH MINIMUM 12 IN OVERLAP AND MINIMUM 4 IN OF COARSE AGGREGATE OR AS RECOMMENDED BY THE GEOTECHNICAL ENGINEER. THE AGGREGATE LAYER SHALL BE PLACED OVER FIRM NATURAL SUBGRADE OR ON COMPACTED AND CONTROLLED FILL. USE AIR ENTRAINMENT AT ALL EXTERIOR SLABS. PROVIDE CONTROL AND CONSTRUCTION JOINTS AT BREEZEWAYS AS REQUIRED TO PREVENT UNCONTROLLED CRACKING PER ACI REQUIREMENTS.
12) SLUMP: 4 IN PLUS OR MINUS 1 IN AT THE POINT OF DISCHARGE INTO THE FORMS.
13) WATER CEMENT RATIO SHALL NOT EXCEED 0.45 FOR ALL AIR ENTRAINED CONCRETE & FOR CONCRETE STRENGTH OF 4,500 PSI & HIGHER. WATER CEMENT RATIO SHALL NOT EXCEED 0.48 FOR ALL OTHER USE.
14) VAPOR BARRIER SHALL BE ASTM E 1745, CLASS A, 10 MIL POLYETHYLENE MINIMUM.
15) CONCRETE COVER BETWEEN FACE OF REINFORCING BAR AND FACE OF CONCRETE SHALL BE ACCORDING TO THE FOLLOWING MINIMUM DIMENSIONS (TOLERANCES) UNLESS NOTED OTHERWISE:
   a. CAST AGAINST AND PERMANENTLY EXPOSED TO EARTH: 3 IN (-1/8", +1")
   b. FORMED AND EXPOSED TO WEATHER OR EARTH:
      i. NO. 5 AND SMALLER BARS 1 1/2 IN (-1/4", +1/2")
      ii. NO. 6 AND LARGER BARS 2 IN (-1/4", +1/2")
   c. FORMED AND NOT EXPOSED TO WEATHER OR EARTH:
      i. SLABS & WALLS: 3/4 IN (-1/4", +3/8")
      ii. BEAMS AND COLUMNS: 1-1/2 IN (-1/4", +1/2")
16) ALL CONCRETE EXPOSED TO WEATHER SHALL HAVE A MINIMUM AIR ENTRAINMENT OF 6% ±1.5 PER ACI 318-11 CLAUSE 4.4.1.
17) PROVIDE CORNER BARS 3 FT x 3 FT AT ALL WALL AND FOOTING INTERSECTIONS TO MATCH CONTINUOUS REINFORCING. ALL LAPS SHALL BE A MINIMUM OF 30 BAR DIAMETER.
18) PROVIDE PROPERLY TIED SPACERS, CHAIRS, BOLSTERS, ETC, AS REQUIRED AND NECESSARY TO ASSEMBLE, PLACE AND SUPPORT ALL REINFORCING IN PLACE. USE WIRE BAR TYPE SUPPORTS COMPLYING WITH CRSI RECOMMENDATIONS. USE PLASTIC TIP LEGS ON ALL EXPOSED SURFACES.
19) ALL BEAMS, SPANDRELS, AND SLABS SHALL BE POURED MONOLITHICALLY EXCEPT FOR REQUIRED CONSTRUCTION JOINTS. PROPOSED CONSTRUCTION JOINTS SHALL BE SUBMITTED TO THE ENGINEER FOR APPROVAL.
20) CONTRACTOR SHALL VERIFY EMBEDDED ITEMS, INCLUDING BUT NOT LIMITED TO ANCHOR BOLTS, BOLT CLUSTERS, WELD PLATES, ETC., BEFORE PLACING CONCRETE. NOTIFY ENGINEER OF ANY CONFLICTS WITH REBAR. ANCHORS INSTALLED IN CAST-IN-PLACE CONCRETE SHALL BE SECURED IN PLACE. USE SETTING DRAWINGS, TEMPLATES AND DIAGRAMS. ALL POST INSTALLED ANCHORS IN HARDENED CONCRETE SHALL FULLY COMPLY WITH MANUFACTURER'S RECOMMENDATIONS.
21) CONTRACTOR SHALL COORDINATE SIZE AND LOCATION OF ALL OPENINGS WITH ARCHITECTURAL, ELECTRICAL, MECHANICAL AND PLUMBING DRAWINGS. PROVIDE FORMED OPENINGS OR PIPE SLEEVES WHEN POURING CONCRETE.
   a. PIPE SLEEVES AND OPENINGS SHALL NOT BE LOCATED CLOSER THAN 18 IN CLEAR FROM ANY FACE OF COLUMN WITHOUT APPROVAL OF THE ENGINEER UNLESS NOTED ON DRAWINGS.
   b. IF CUTTING OR DRILLING OF CONCRETE SLAB IS REQUIRED, ALL MEANS OF AVOIDING DAMAGE TO SLAB REINFORCEMENT SHALL BE UTILIZED, INCLUDING VERIFYING LOCATION OF REBARS.
   c. ARRANGE REINFORCING AROUND OPENINGS AS SHOWN IN TYPICAL DETAILS. EMBEDDED PIPES OR CONDUITS SHALL BE SPACED AT LEAST THREE DIAMETERS ON CENTERS, UNLESS NOTED OTHERWISE.
   d. PLACE SLAB BARS TO CLEAR SLEEVES AND MAINTAIN 1 1/2 IN CLEAR SPACING BETWEEN BARS. WHERE SLEEVES ARE CLOSELY SPACED IN A GROUP, THE GROUP SHALL BE TREATED AS AN OPENING AND REINFORCED ACCORDINGLY.

SUBMITTALS:

22) SUBMIT PROPOSED CONCRETE MIX DESIGN PRIOR TO CONSTRUCTION, INCLUDING BACKUP DATA IN ACCORDANCE WITH ACI 301 CHAPTER 3, METHOD 1 OR 2 FOR ENGINEER OF RECORD'S APPROVAL. THE PROPOSED MIX DESIGN SHALL BE SIGNED AND SEALED BY A REGISTERED PROFESSIONAL ENGINEER. THE SIGNED AND SEALED CONCRETE DESIGN MIX REVIEWED AND APPROVED BY THE ENGINEER OF RECORD SHALL BE AVAILABLE AT THE SITE AT ALL TIMES FOR THE BUILDING INSPECTOR.
23) SUBMIT DETAILED SHOP DRAWINGS OF REINFORCING BARS SHOWING NUMBER, SIZE, AND LOCATION. INCLUDE BAR LISTS AND BEND DIAGRAMS.
24) SUBMIT PRODUCT DATA FOR POST INSTALLED ANCHORS AND SHOP DRAWINGS FOR ANCHORS IN CAST-IN-PLACE CONCRETE INDICATING SIZES, LOCATIONS AND MEANS AND METHOD FOR REVIEW.

III. STRUCTURAL STEEL

1) STRUCTURAL STEEL SHALL CONFORM TO AISC "SPECIFICATION FOR THE DESIGN, FABRICATION AND ERECTION OF STRUCTURAL STEEL FOR BUILDINGS", LATEST EDITION, EXCEPT CHAPTER 4.2.1, CODE OF STANDARD PRACTICE.
2) ALL STRUCTURAL STEEL SHALL BE
   a. W SHAPES ASTM 992 (WHERE AVAILABLE) OR ASTM A572 (GRADE 50)
   b. PLATES, CHANNELS AND ANGLES ASTM A572 (GRADE 50) OR A36
   c. STRUCTURAL TUBES (HSS) ASTM A500 (GRADE B)
   d. PIPE SECTIONS ASTM A53 (STANDARD PIPE U.N.O.)
   e. BOLTS ASTM A325 OR A490 BOLTS.
   f. ANCHOR BOLTS ASTM F1554 GRADE 55
3) NON-SHRINK GROUT SHALL BE NONMETALLIC SHRINKAGE-RESISTANT GROUT, PREMIXED, NONMETALLIC, NON-CORROSIVE, NON-STAINING PRODUCT CONTAINING SELECTED SILICA SANDS, PORTLAND CEMENT, SHRINKAGE COMPENSATING AGENTS, PLASTICIZING AND WATER-REDUCING AGENTS, COMPLYING WITH CE-CRD-C621.
4) WELDED CONNECTIONS SHALL CONFORM TO THE LATEST REVISED CODE OF THE AMERICAN WELDING SOCIETY, AWS D1.1. ALL WELDING SHALL BE PERFORMED USING E70XX, LOW HYDROGEN ELECTRODES, U.N.O. ELECTRODES ARE TO BE PROTECTED FROM MOISTURE.
5) BOLTS AND BOLTED CONNECTIONS SHALL CONFORM TO THE REQUIREMENTS OF THE "SPECIFICATIONS FOR STRUCTURAL JOINTS" AS APPROVED BY THE RESEARCH COUNCIL ON STRUCTURAL CONNECTIONS. USE BEARING TYPE BOLTS WITH THREAD ALLOWED ACROSS THE SHEAR PLANE. SIZE AND USE OF HOLES: SEE AISC TABLE J3.1 U.N.O.
6) ALL MISCELLANEOUS STEEL CONNECTIONS SHALL BE WELDED ALL AROUND WITH 1/4 IN FILLET WELD UNLESS OTHERWISE NOTED, EXCEPT FOR SLOTTED CONNECTIONS.
7) ALL STEEL MEMBERS EXPOSED TO WEATHER SHALL BE HOT-DIPPED GALVANIZED IN THEIR ENTIRETY.
8) FULL PENETRATION WELDS SHALL BE MADE AGAINST A 1/8 IN X 1 IN BACKER PLATE TACK WELDED IN PLACE BELOW FEEDING THE WELD. PENETRATION WELDS SHALL BE EQUIVALENT IN DEPTH AND LENGTH TO THE PARTS JOINED.
9) COLUMN SPLICES SHALL BE DESIGNED IN ACCORDANCE THE AISC "STRUCTURAL STEEL DETAILING" MANUAL.
10) NO SPLICES OR PENETRATIONS SHALL BE PERMITTED IN ANY STRUCTURAL STEEL MEMBER UNLESS SHOWN ON APPROVED SHOP DRAWINGS.
11) PAINTING: ONE COAT OF SHOP PAINT SHALL BE APPLIED TO ALL STRUCTURAL STEEL WITH THE EXCEPTION OF AREAS TO BE WELDED.
12) FABRICATION SHALL NOT PROCEED PRIOR TO SHOP DRAWINGS APPROVAL.

TESTING:

13) QUALIFIED TESTING LABORATORY SHALL BE RETAINED TO VISUALLY INSPECT ALL STEEL MEMBERS AND CONNECTIONS AND ULTRASONIC TEST (UT) 50 PERCENT OF FULL PENETRATION WELDS. VISUAL WELDING INSPECTION SHALL BE PERFORMED BY AN AWS CERTIFIED WELDING INSPECTOR.

SUBMITTALS:

14) SUBMIT DETAILED SHOP DRAWINGS SHOWING ALL STRUCTURAL STEEL LAYOUTS AND DETAILS, SIZES OF MEMBERS, TYPE OF STEEL, CONNECTION DETAILS, WELD SIZE AND LENGTH, BOLTS, CUTS, PENETRATIONS, ETC., AS REQUIRED TO FABRICATE AND ERECT ALL STRUCTURAL STEEL FRAMING.
15) ALL CONNECTIONS NOT SHOWN ON THE STRUCTURAL DRAWINGS SHALL BE BY THE DETAILER AND SUBMITTED ON SHOP DRAWINGS.
16) SHOP DRAWING PREPARATION SHALL BE SUPERVISED BY A REGISTERED PROFESSIONAL ENGINEER.

IV. METAL STAIRS, LADDERS, GUARDS, AND HANDRAILS

1) METAL STAIRS AND LADDERS SHALL BE DESIGNED AND CERTIFIED BY THE MANUFACTURER'S LICENSED DESIGN ENGINEER. PROVIDE CROSS-BRACING BELOW METAL STRINGERS TO AVOID LATERAL MOVEMENT AS REQUIRED. DESIGN SHALL BE PER THE METAL STAIR MANUFACTURER'S ENGINEER.
2) HANDRAILS AND GUARDS:
   a. HANDRAILS ASSEMBLIES AND GUARDS SHALL BE DESIGNED TO RESIST A LOAD OF 50 POUNDS PER LINEAR FOOT APPLIED IN ANY DIRECTION AT THE TOP AND TO TRANSFER THIS LOAD THROUGH THE SUPPORTS OF THE STRUCTURE.
   b. HANDRAILS ASSEMBLIES AND GUARDS SHALL BE ABLE TO RESIST A SINGLE CONCENTRATED LOAD OF 200 POUNDS APPLIED IN ANY DIRECTION AT ANY POINT ALONG THE TOP, AND HAVE ATTACHMENT DEVICES AND SUPPORTING STRUCTURE TO TRANSFER THIS LOADING TO APPROPRIATE STRUCTURAL ELEMENTS OF THE BUILDING. THIS LOAD NEED NOT BE ASSUMED TO ACT CONCURRENTLY WITH THE LOADS SPECIFIED IN THE PROCEEDING PARAGRAPH. CONTRACTOR'S ENGINEER SHALL VERIFY ABOVE LOADING REQUIREMENT WITH APPLICABLE CODE.
3) SUBMITTALS:
   a. METAL STAIRS, LADDERS, GUARDS, HANDRAILS AND BALCONIES: SUBMIT SIGNED AND SEALED SHOP DRAWINGS AND CALCULATIONS FOR REVIEW AND APPROVAL. SHOP DRAWING PREPARATION SHALL BE SUPERVISED BY A REGISTERED PROFESSIONAL ENGINEER

WARNING: THE STRUCTURAL INTEGRITY OF THE BUILDING SHOWN IN THESE PLANS DEPENDS ON COMPLETION ACCORDING TO THE PLANS AND SPECIFICATIONS. STRUCTURAL MEMBERS ARE NOT SELF-BRACING UNTIL PERMANENTLY AFFIXED TO THE STRUCTURE. THE STRUCTURAL ENGINEERS ASSUME NO LIABILITY FOR THE STRUCTURE DURING CONSTRUCTION.

SIMILARLY, ALL EXISTING STRUCTURES AND EXISTING ADJACENT BUILDINGS TO REMAIN SHALL BE EVALUATED BY THE GENERAL CONTRACTOR FOR STABILITY PRIOR TO ANY DEMOLITION AND CONSTRUCTION. IF DEEMED NECESSARY, ALL EXISTING STRUCTURES AND EXISTING ADJACENT BUILDINGS TO REMAIN SHALL BE FULLY BRACED AND SHORED AS REQUIRED BY THE GENERAL CONTRACTOR. GENERAL CONTRACTOR SHALL OBTAIN A SERVICE OF A CERTIFIED BRACING AND SHORING CONTRACTOR AND IT'S CERTIFIED SPECIALTY ENGINEER AS REQUIRED.

DESIGN LOAD SCHEDULE

DESIGN CODE: 2018 INTERNATIONAL BUILDING CODE (IBC)

LIVE LOADS	
MEZZANINE FLOOR	100 PSF
STAIRS AND LANDINGS	100 PSF

WIND DESIGN DATA	
ULTIMATE WIND SPEED	115 MPH
BASIC WIND SPEED	90 MPH
TOPOGRAPHIC WIND EFFECTS	NO
RISK CATEGORY	IV
WIND EXPOSURE CATEGORY	B

EARTHQUAKE DESIGN DATA	
SEISMIC IMPORTANCE FACTOR (I)	1.0
BUILDING RISK CATEGORY	IV
SITE CLASS	D
MAPPED SPECTRAL RESPONSE ACCELERATIONS	
i. AT SHORT PERIODS (Ss)	0.103
ii. AT A PERIOD OF 1 SEC (S1)	0.051
SPECTRAL RESPONSE COEFFICIENTS	
i. AT SHORT PERIODS (Sos)	0.11
ii. AT A PERIOD OF 1 SEC (So1)	0.081
SEISMIC DESIGN CATEGORY	C
SEISMIC RESPONSE COEFFICIENT (Cs)	0.85
RESPONSE MODIFICATION FACTOR (R)	2.5
ANALYSIS PROCEDURE USED	SEE NOTE 1

NOTES:
1. EQUIVALENT LATERAL FORCE PROCEDURE.

STRUCTURAL DRAWINGS SHEET INDEX

	SHEET NO.	DRAWING DESCRIPTION
1	S001	STRUCTURAL NOTES
2	S101	PART FRAMING PLANS - EXISTING CONDITION
3	S102	PART FRAMING PLANS - NEW WORK
4	S201	WALL SECTION FOR EXISTING CONDITION
5	S202	WALL SECTION FOR NEW MEP UNIT

BID DOCUMENTS 05/20/2025

NO.	DESCRIPTION	DATE
	30% SUBMISSION	02-23-2022
	30% SUBMISSION (RESUBMISSION)	12-30-2022
	60% SUBMISSION	11-24-2023
	100% SUBMISSION	03-27-2024
	BID DOCUMENTS	05-20-2025

CONSULTANTS:

3930 Pender Drive #175
Fairfax, VA 22030
703.890.5000
703.890.5006-FAX
email: info@beidc.com
BEI # 23166.00
BEI Structural Engineers

SEAL

05/20/2025

ARCHITECT/ENGINEERS:

A DESIGN GROUP, LLC
ART - ARCHITECTURE - ENGINEERING
2787 HILL ROAD
VIENNA, VA 22181

FRANK V. STURGEON, AIA

AMBRISH RASTOGI, PE

703.938.5226
FRANK@ADG10.COM

Drawing Title: **STRUCTURAL NOTES**

Approved: Project Director

Project Title: **Replace Boiler #3**

Location: Clarksburg WV Medical Center

Date: 05/20/2025 | Checked | Drawn

Project Number: **540-22-103**

Building Number: NO. 1

Drawing Number: **S001**

Dwg. 2 of 24

Office of Construction and Facilities Management

Department of Veterans Affairs

VA FORM 08-6231

THIS DRAWING IS ISSUED FOR PRELIMINARY PRICING AND/OR GOVERNMENT REVIEW ONLY. THIS DRAWING IS NOT FOR CONSTRUCTION.

May 20, 2025 - 9:00am - Protect By: GDL - T2000 Drawing/Design Packages\540-22-103 VA Medical CS - ABP 1\540-22-103 S001.dwg

IF THIS SHEET IS NOT 30" X42" FULL SIZE, USE GRAPHIC SCALE.

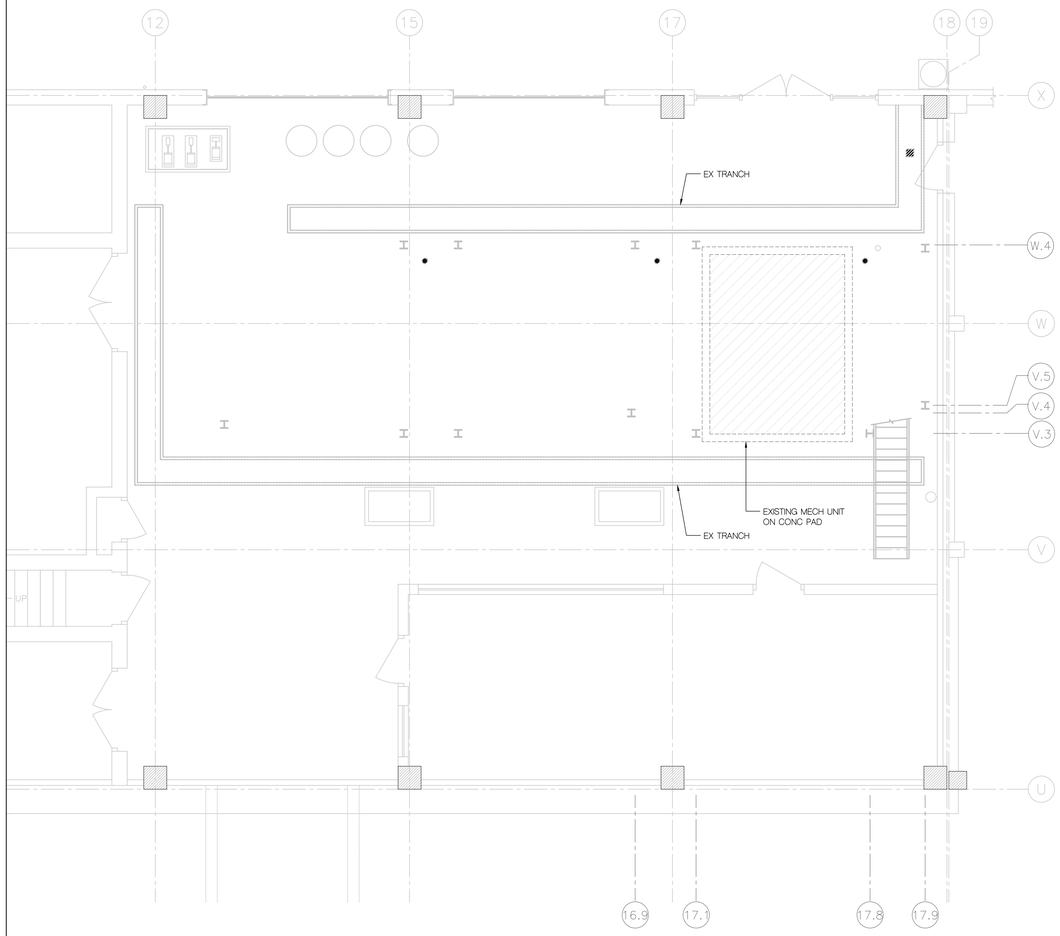

1 EXISTING CONDITION FROUND/ FOUNDATION PLAN
SCALE : 1/4" = 1'-0"

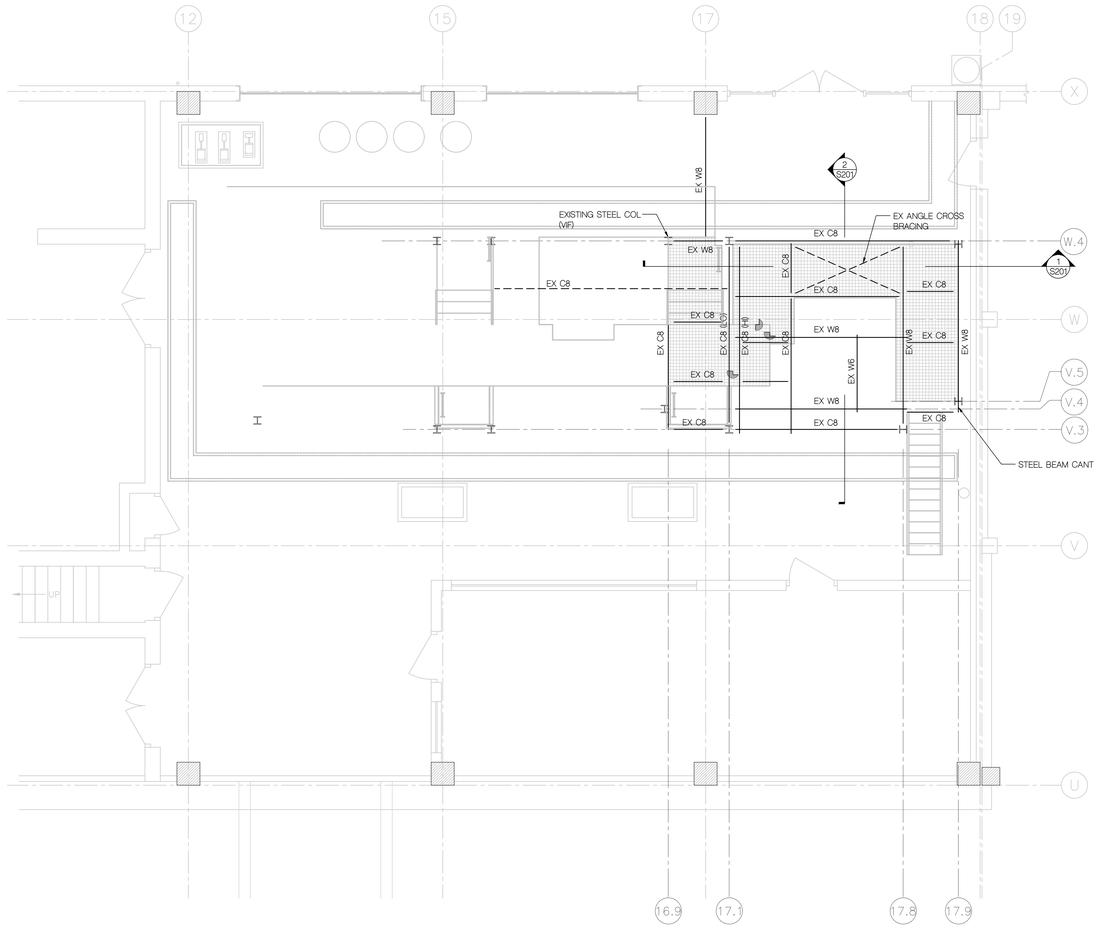

2 EXISTING CONDITION MEZZ LEVEL FRAMING PLAN
SCALE : 1/4" = 1'-0"

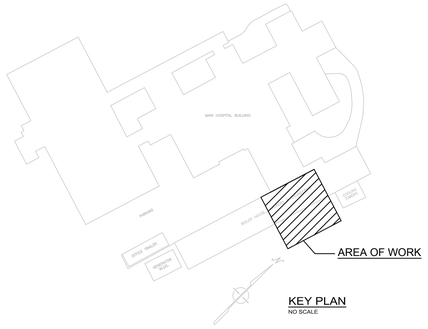

KEY PLAN
NO SCALE

BID DOCUMENTS 05/20/2025

NO.	DESCRIPTION	DATE
	30% SUBMISSION	02-23-2022
	30% SUBMISSION (RESUBMISSION)	12-30-2022
	60% SUBMISSION	11-24-2023
	100% SUBMISSION	03-27-2024
	BID DOCUMENTS	05-20-2025

VA FORM 08-6231

THIS DRAWING IS ISSUED FOR PRELIMINARY PRICING AND/OR GOVERNMENT REVIEW ONLY. THIS DRAWING IS NOT FOR CONSTRUCTION.

CONSULTANTS:

BEI Structural Engineers
3930 Pender Drive #175
Fairfax, VA 22030
703.890.5000
703.890.5006-FAX
email: info@beidc.com
BEI# 23166.00

SEAL

05/20/2025

ARCHITECT/ENGINEERS:

A DESIGN GROUP, LLC
ART - ARCHITECTURE - ENGINEERING
2787 HILL ROAD
VIENNA, VA 22181

FRANK V. STURGEON, AIA

AMBRISH RASTOGI, PE

703.938.5226
FRANK@ADG10.COM

Drawing Title
PARTIAL FRAMING PLANS - EXISTING CONDITION

Approved: Project Director

Project Title
Replace Boiler #3

Location
Clarksburg WV Medical Center

Date 05/20/2025 | Checked | Drawn

Project Number
540-22-103

Building Number
NO. 1

Drawing Number
S101
Dwg. 3 of 24

Office of Construction and Facilities Management

Department of Veterans Affairs

IF THIS SHEET IS NOT 30" X42" FULL SIZE, USE GRAPHIC SCALE.

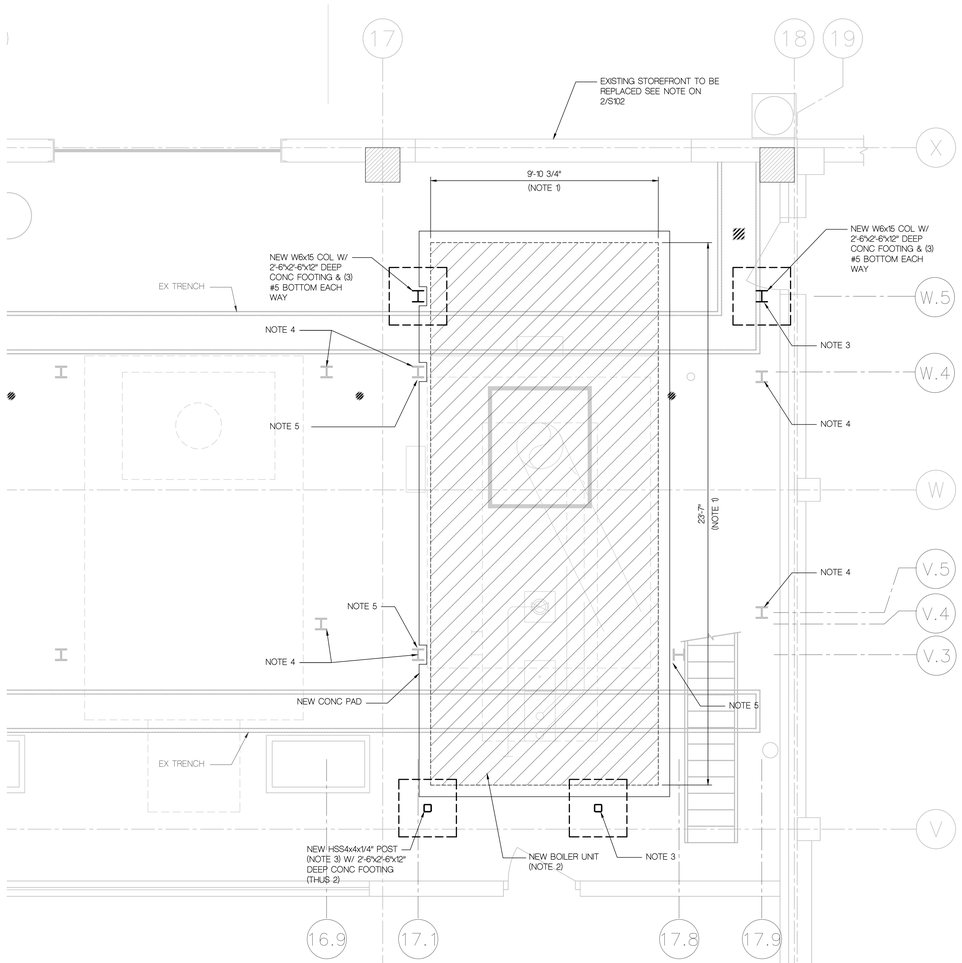

1 NEW BOILER AT GROUND/ FOUNDATION PLAN

SCALE : 3/8" = 1'-0"

NOTES:

1. GC SHALL VERIFY & COORDINATE WITH MECHANICAL ENGINEER OF RECORD & MECHANICAL CONTRACTOR PRIOR TO ANY STEEL FABRICATION & CONSTRUCTION.
2. THE SIZE & DIMENSIONS OF NEW BOILER UNITS ARE BASE ON THE SPECIFIC BOILER TYPE PROVIDED BY MECHANICAL ENGINEER (REFER TO MECHANICAL DRAWINGS). ANY CHANGE BY GENERAL CONTRACTOR FROM PROPOSED BOILER UNIT TO AN ALTERNATE UNIT WILL REQUIRED REDESIGN OF PROPOSED STRUCTURAL SUCH AS STEEL FRAMING, PLATFORM/ CATWALK, STAIR, RAILINGS ETC.
3. NEW COLUMN/ NEW POST LOCATIONS SHALL BE FIELD VERIFIED & LOCATED. LOCATIONS OF THESE NEW COLUMN/ NEW POST SHALL BE APPROVED BY CLIENT, ARCH'T & MECHANICAL ENGINEER.
4. ALL EXISTING STEEL POSTS/ COLUMN TO REMAIN.
5. • DO NOT CUT ANY EXISTING SLAB NEAR EXISTING COLUMNS.
   • POUR NEW 12" SLAB EDGE WITH NO TURN DOWN SLAB FOOTING NEAR EXISTING COLUMNS.
   • KEEP 14" ON EXISTING SLAB UNCUT FROM EDGE OF EXISTING COLUMNS ON ALL SIDES.

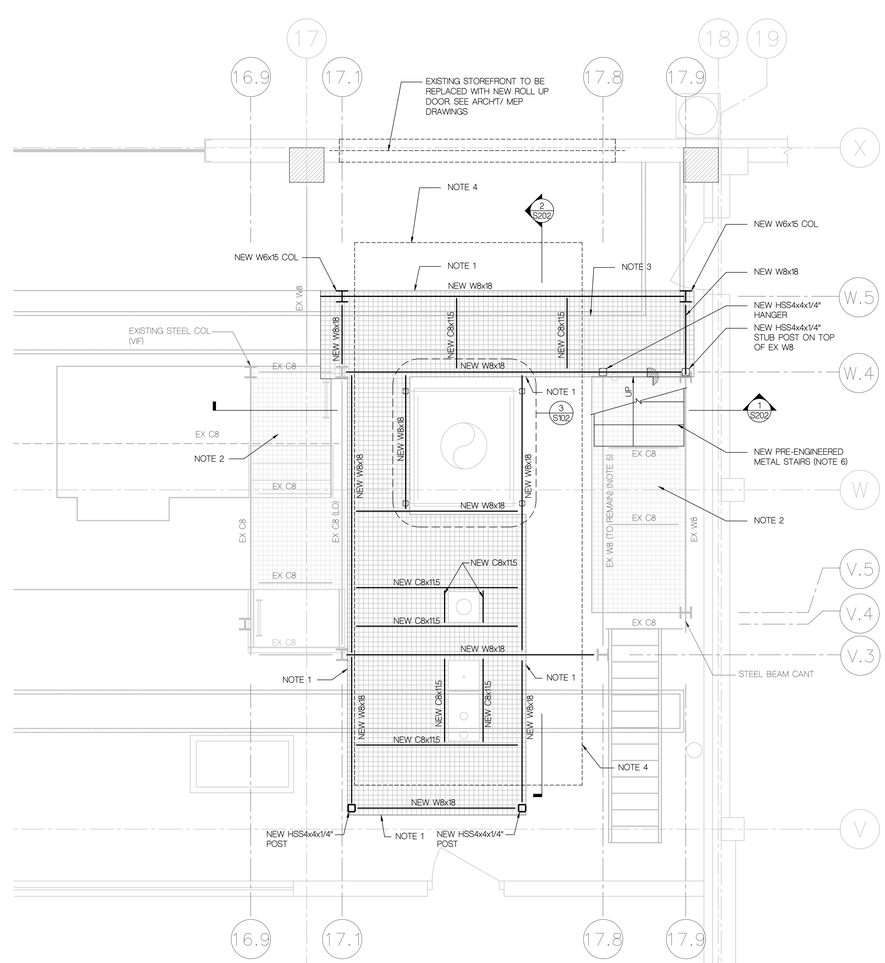

2 NEW MEZZ LEVEL FRAMING PLAN

SCALE : 3/8" = 1'-0" ABOVE NEW BOILER

NOTES:

1. PROVIDE PRE-ENGINEERED STEEL GUARDRAILS TO MEET CURRENT CODE AT ALL EDGES OF CATWALK. SUBMIT SIGNED AND SEALED SHOP DRAWINGS FOR REVIEW BY THE DESIGN TEAM.
2. EXISTING METAL GRATING & EXISTING STEEL FLOOR FRAMING TO REMAIN.
3. NEW METAL GRATING FLOOR TO MATCH EXISTING & SHALL BE SUPPORTED BY NEW STEEL FRAMING.
4. PROPOSED NEW BOILER UNIT BELOW SEE MEP DWGS. ALSO SEE NOTE 3 ON PLAN 1/S102.
5. THIS BEAM WILL REQUIRED NEW HANGER SUPPORT (SEE 1/S202).
6. PRE-ENGINEERED STAIR SHALL BE MIN 36-INCHES WIDE, AND RISERS OF MAX 7-INCHES HIGH & MINIMUM RISER HEIGHT SHALL BE 4-INCHES WITH TREAD WIDTH SHALL BE 11-INCHES. SUBMIT SIGNED AND SEALED PRE-ENGINEERED STAIR DRAWINGS FOR REVIEW BY THE DESIGN TEAM.

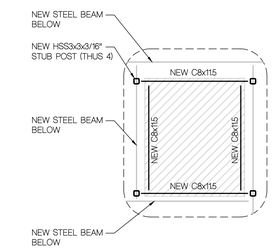

3 PLAN DETAIL

SCALE : 3/8" = 1'-0"

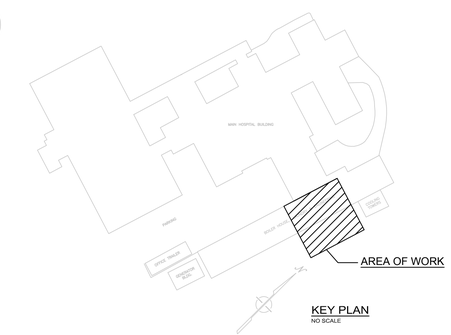

KEY PLAN
NO SCALE

BID DOCUMENTS 05/20/2025

NO.	DESCRIPTION	DATE
	30% SUBMISSION	02-23-2022
	30% SUBMISSION (RESUBMISSION)	12-30-2022
	60% SUBMISSION	11-24-2023
	100% SUBMISSION	03-27-2024
	BID DOCUMENTS	05-20-2025

CONSULTANTS:

BEI Structural Engineers
3930 Pender Drive #175
Fairfax, VA 22030
703.890.5000
703.890.5006-FAX
email: info@beidc.com
BEI# 23166.00

SEAL

05/20/2025

ARCHITECT/ENGINEERS:

A DESIGN GROUP, LLC
ART - ARCHITECTURE - ENGINEERING
2787 HILL ROAD
VIENNA, VA 22181

FRANK V. STURGEON, AIA

AMBRISH RASTOGI, PE

703.938.5226
FRANK@ADG10.COM

Drawing Title: PARTIAL FRAMING PLANS - NEW WORK

Approved: Project Director

Project Title: Replace Boiler #3

Location: Clarksburg WV Medical Center

Date: 05/20/2025 | Checked | Drawn

Project Number: 540-22-103

Building Number: NO. 1

Drawing Number: S102

Dwg. 4 of 24

Office of Construction and Facilities Management

Department of Veterans Affairs

VA FORM 08-6231

THIS DRAWING IS ISSUED FOR PRELIMINARY PRICING AND/OR GOVERNMENT REVIEW ONLY. THIS DRAWING IS NOT FOR CONSTRUCTION.

IF THIS SHEET IS NOT 30" X42" FULL SIZE, USE GRAPHIC SCALE.

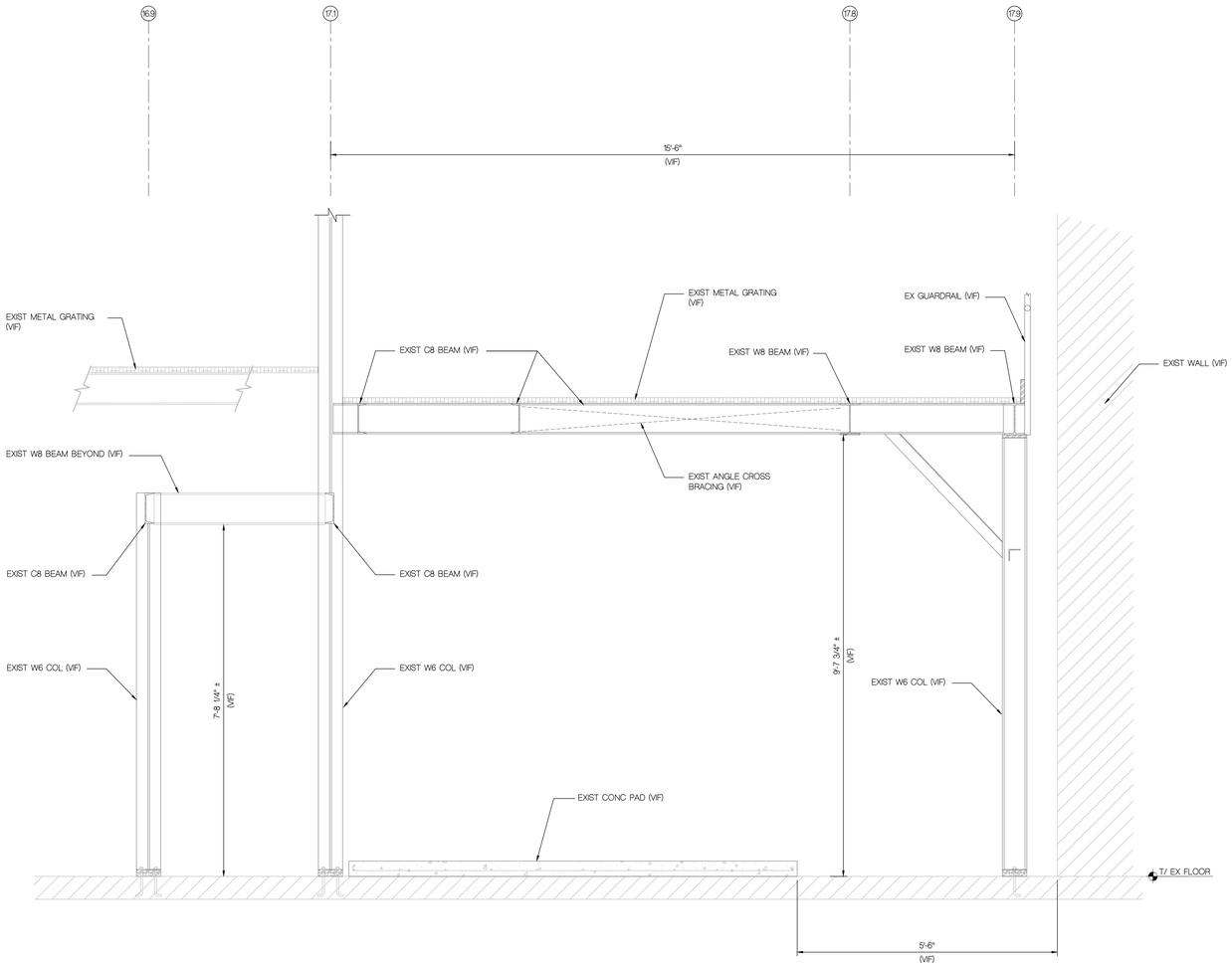

1 SECTION (EXISTING CONDITION)
SCALE : NTS

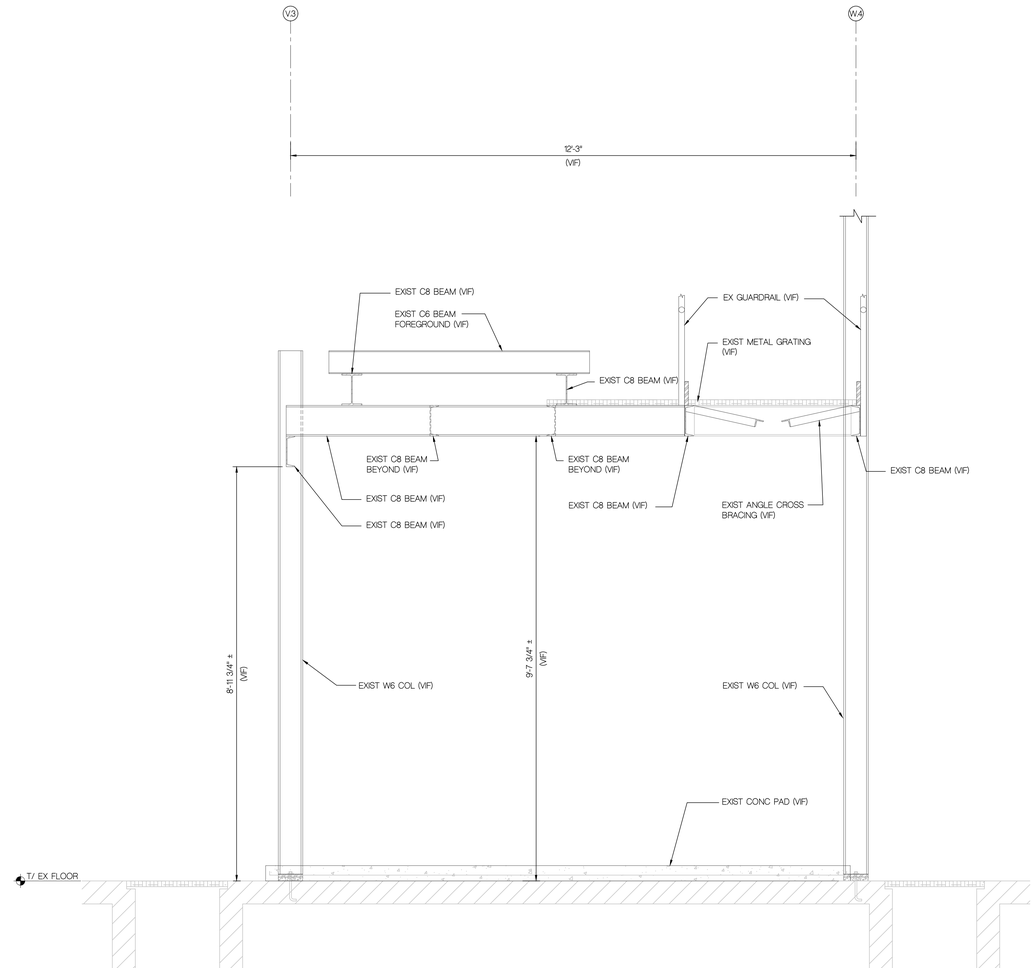

2 SECTION (EXISTING CONDITION)
SCALE : NTS

BID DOCUMENTS 05/20/2025

NO.	DESCRIPTION	DATE
	30% SUBMISSION	02-23-2022
	30% SUBMISSION (RESUBMISSION)	12-30-2022
	60% SUBMISSION	11-24-2023
	100% SUBMISSION	03-27-2024
	BID DOCUMENTS	05-20-2025

CONSULTANTS:

BEI Structural Engineers
3930 Pender Drive #175
Fairfax, VA 22030
703.890.5000
703.890.5006-FAX
email: info@beidc.com
BEI# 23166.00

SEAL
05/20/2025

ARCHITECT/ENGINEERS:

A DESIGN GROUP, LLC
ART - ARCHITECTURE - ENGINEERING
2787 HILL ROAD
VIENNA, VA 22181

FRANK V. STURGEON, AIA

AMBRISH RASTOGI, PE

703.938.5226
FRANK@ADG10.COM

Drawing Title
WALL SECTIONS FOR EXISTING CONDITION

Approved: Project Director

Project Title
Replace Boiler #3

Location
Clarksburg WV Medical Center

Date 05/20/2025 | Checked | Drawn

Project Number
540-22-103

Building Number
NO. 1

Drawing Number
S201
Dwg. 5 of 24

Office of Construction and Facilities Management
Department of Veterans Affairs

VA FORM 08-6231 THIS DRAWING IS ISSUED FOR PRELIMINARY PRICING AND/OR GOVERNMENT REVIEW ONLY. THIS DRAWING IS NOT FOR CONSTRUCTION.

IF THIS SHEET IS NOT 30" X42" FULL SIZE, USE GRAPHIC SCALE.

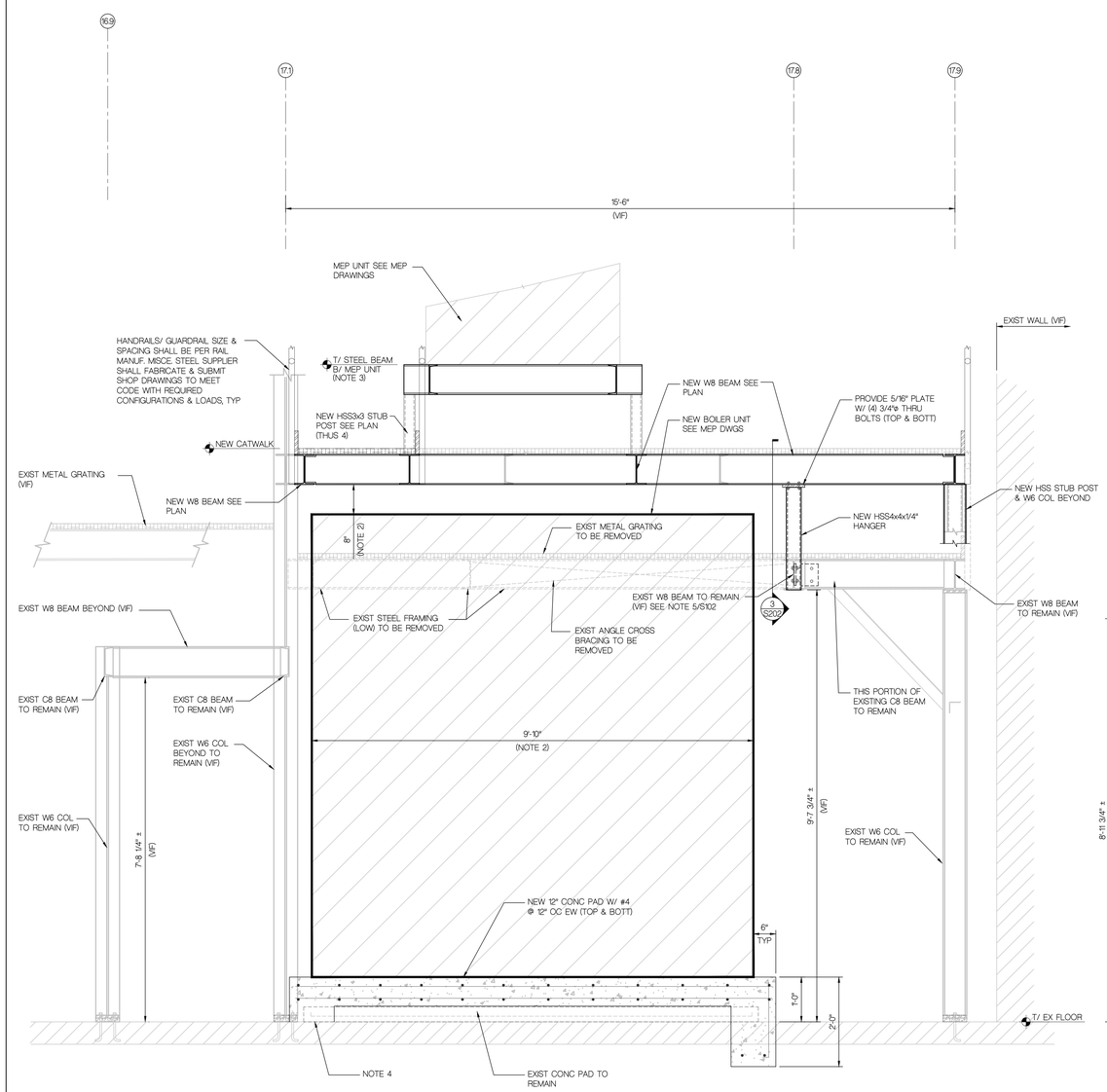

1 SECTION AT NEW BOILER

SCALE : NTS

NOTES:

1. GC SHALL ENGAGE STEEL SUBCONTRACTOR TO FIELD VERIFY & MEASURE EXISTING STEEL CONDITION FOR A NEW EXTENSION CONNECTION DETAIL (TO DEMONSTRATE PROPER FILLING). SUBMIT DETAIL AS A PART OF STEEL SHOP DRAWINGS TO THE ENGINEER OF RECORD FOR APPROVAL PRIOR TO ANY FABRICATION & CONSTRUCTION.
2. GC SHALL VERIFY & COORDINATE WITH MECHANICAL ENGINEER OF RECORD & MECHANICAL CONTRACTOR PRIOR TO ANY STEEL FABRICATION & CONSTRUCTION.
3. SEE MEP DRAWINGS, TYP
4. DO NOT CUT EXISTING SLAB NEAR EXISTING COLUMN LOCATIONS. ALSO SEE NOTES ON PLAN 1/S102 AT EXISTING COLUMNS

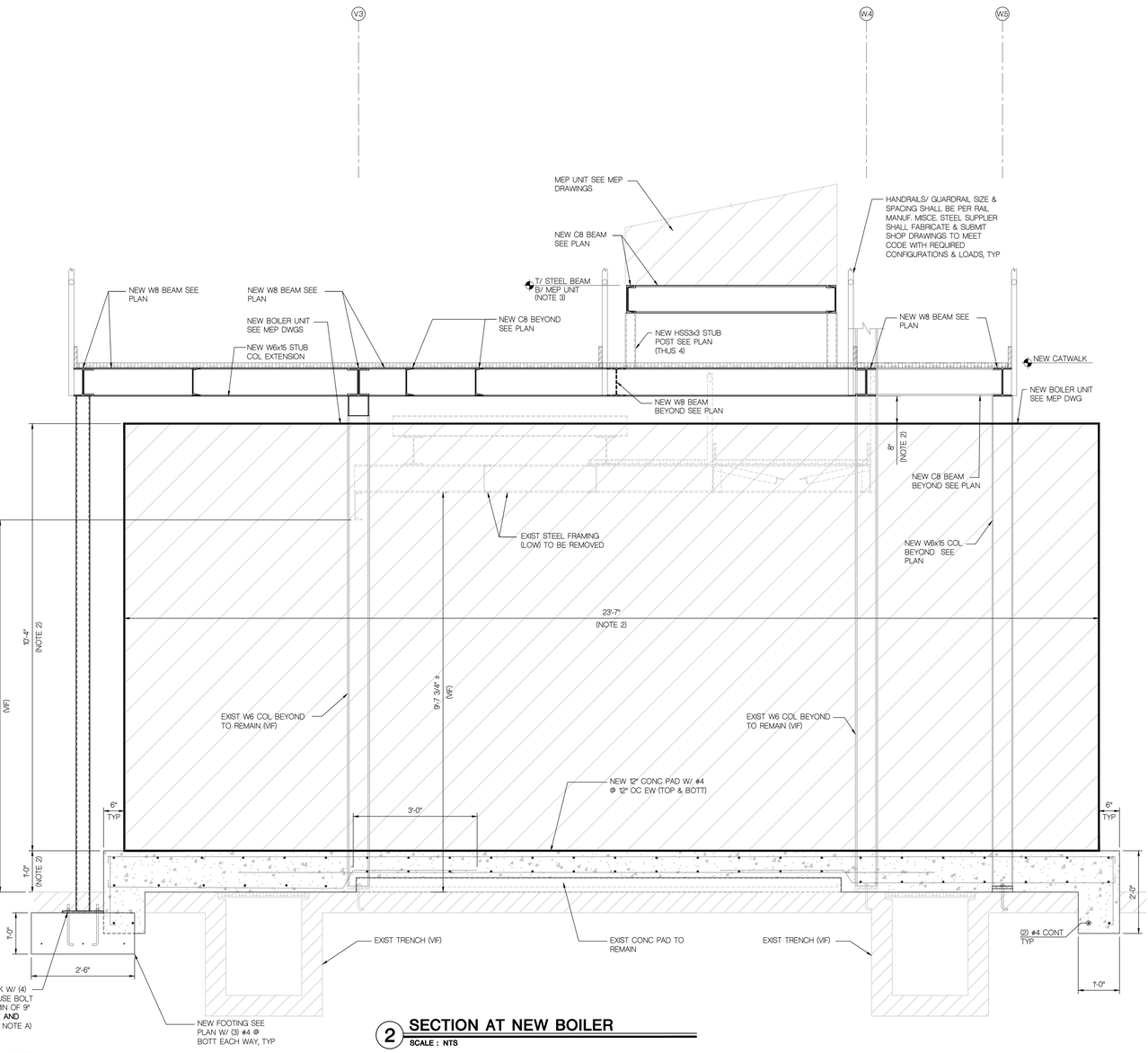

NOTE A:
3/4" DIA HILTY HY-200 EPOXY ANCHOR BOLT W/ MIN 6" EMBED CAN BE SUBSTITUTED FOR CP ANCHOR BOLTS AT THIS LOCATION

2 SECTION AT NEW BOILER

SCALE : NTS

NOTES:

1. GC SHALL ENGAGE STEEL SUBCONTRACTOR TO FIELD VERIFY & MEASURE EXISTING STEEL CONDITION FOR A NEW EXTENSION CONNECTION DETAIL (TO DEMONSTRATE PROPER FILLING). SUBMIT DETAIL AS A PART OF STEEL SHOP DRAWINGS TO THE ENGINEER OF RECORD FOR APPROVAL PRIOR TO ANY FABRICATION & CONSTRUCTION.
2. GC SHALL VERIFY & COORDINATE WITH MECHANICAL ENGINEER OF RECORD & MECHANICAL CONTRACTOR PRIOR TO ANY STEEL FABRICATION & CONSTRUCTION.

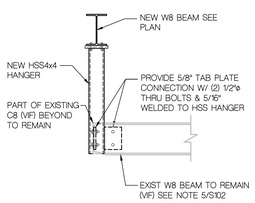

3 SECTION

SCALE : NTS

BID DOCUMENTS 05/20/2025

30% SUBMISSION	02-23-2022
30% SUBMISSION (RESUBMISSION)	12-30-2022
60% SUBMISSION	11-24-2023
100% SUBMISSION	03-27-2024
BID DOCUMENTS	05-20-2025
NO. DESCRIPTION	DATE

CONSULTANTS:

3930 Pender Drive #175
Fairfax, VA 22030
703.890.5000
703.890.5006-FAX
email: info@beidc.com
BEI# 23166.00
BEI Structural Engineers

SEAL

THERMAL PROTECTION REGISTERED 14841 STATE OF VIRGINIA PROFESSIONAL ENGINEER
05/20/2025

ARCHITECT/ENGINEERS:

A DESIGN GROUP, LLC
ART - ARCHITECTURE - ENGINEERING
2787 HILL ROAD
VIENNA, VA 22181

FRANK V. STURGEON, AIA

AMBRISH RASTOGI, PE

703.938.5226
FRANK@ADG10.COM

Drawing Title
WALL SECTIONS FOR NEW BOILER

Approved: Project Director

Project Title
Replace Boiler #3

Location
Clarksburg WV Medical Center

Date 05/20/2025 | Checked | Drawn

Project Number
540-22-103

Building Number
NO. 1

Drawing Number
S202
Dwg. 6 of 24

Office of Construction and Facilities Management

Department of Veterans Affairs

VA FORM 08-6231

THIS DRAWING IS ISSUED FOR PRELIMINARY PRICING AND/OR GOVERNMENT REVIEW ONLY. THIS DRAWING IS NOT FOR CONSTRUCTION.

IF THIS SHEET IS NOT 30" X42" FULL SIZE, USE GRAPHIC SCALE.

FENCE AND GENERAL NOTES:

1. CAREFULLY REMOVE PORTION OF FENCE & GATE TO GET TEMPORARY BOILER & CONTROL ROOM/OFFICE IN PLACE. RE-INSTALL FENCE & GATE.
2. AFTER REMOVAL OF TEMPORARY BOILER, RE-INSTALL FENCE AND GATE.
3. THE GENERAL CONTRACTOR SHALL REPAIR THE EXISTING ASPHALTS TO INSTALL THE LIGHT AND CAMERA POLE BASES AND TO RUN UNDERGROUND CONDUITS. MATCH EXISTING AFTER WORK IS COMPLETED. THE GENERAL CONTRACTOR SHALL COORDINATE WITH COR FOR THE PAVING WORK

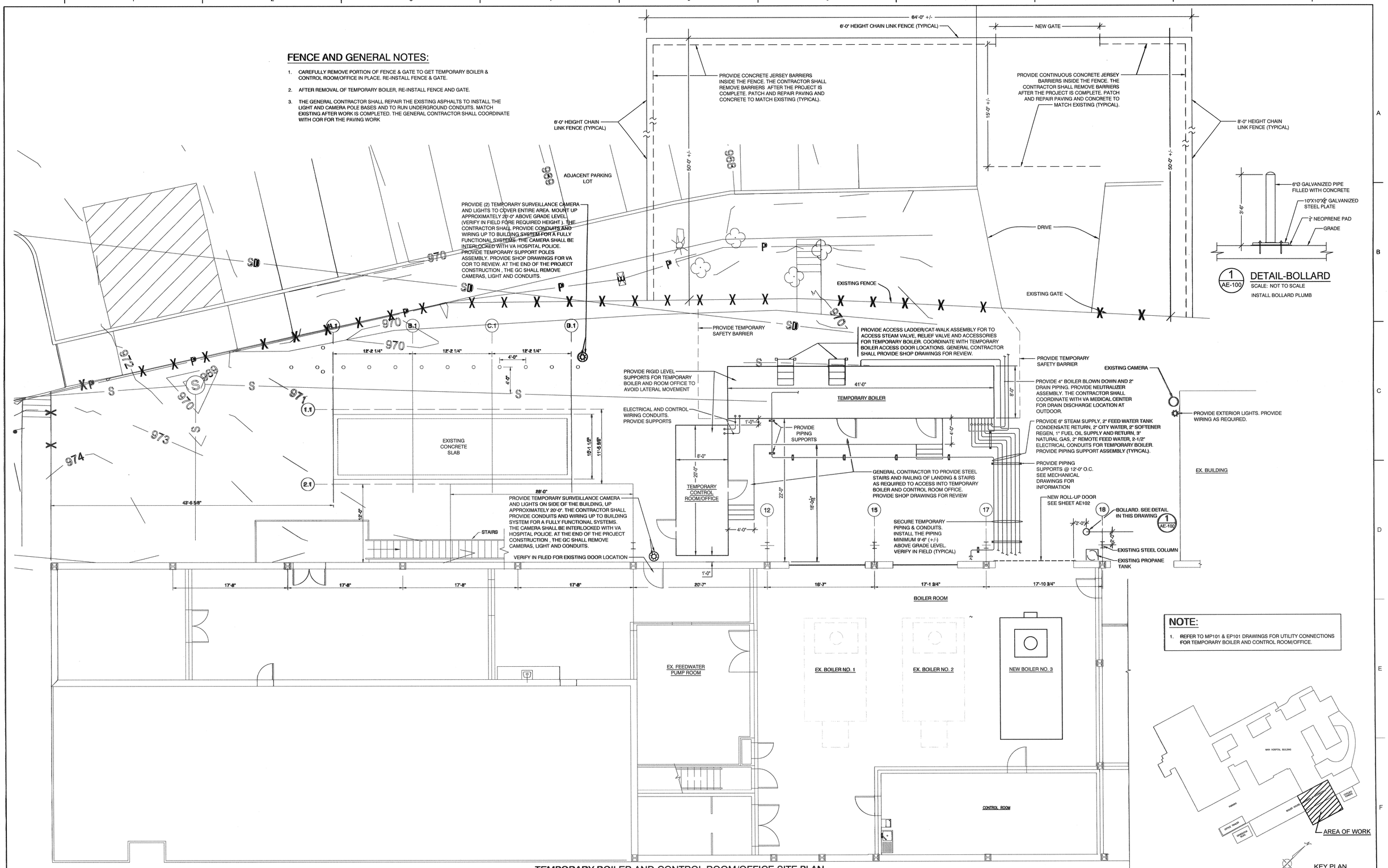

TEMPORARY BOILER AND CONTROL ROOM/OFFICE SITE PLAN

SCALE: 3/16" = 1'-0"

NOTE:

1. REFER TO MP101 & EP101 DRAWINGS FOR UTILITY CONNECTIONS FOR TEMPORARY BOILER AND CONTROL ROOM/OFFICE.

NO.	DESCRIPTION	DATE
	30% SUBMISSION	02-23-2022
	30% SUBMISSION (RESUBMISSION)	12-30-2022
	60% SUBMISSION	11-24-2023
	100% SUBMISSION	03-27-2024
	100%-2ND SUBMISSION	05-14-2024
	BID DOCUMENTS	05-20-2025

VA FORM 08-6231

CONSULTANTS:

Architectural: STATE OF WEST VIRGINIA — FRANK V. STURGEON No. 4866 — REGISTERED ARCHITECT — SIGNATURE 5-20-25

ARCHITECT/ENGINEERS:

A DESIGN GROUP, LLC
ART - ARCHITECTURE - ENGINEERING
2787 HILL ROAD
VIENNA, VA 22181

FRANK V. STURGEON, AIA

AMBRISH RASTOGI, PE

703.938.5226
FRANK@ADG10.COM

Drawing Title: **TEMPORARY BOILER & CONTROL ROOM/OFFICE SITE PLAN**

Approved: Project Director

Project Title: **Replace Boiler #3**

Location: Clarksburg WV Medical Center

Date: 05/20/2025 | Checked: FVS | Drawn: CCU

Project Number: **540-22-103**

Building Number: NO. 1

Drawing Number: **AE100**

Dwg. 7 of 25

Office of Construction and Facilities Management

Department of Veterans Affairs

IF THIS SHEET IS NOT 30" X42" FULL SIZE, USE GRAPHIC SCALE.

DRAWING NOTES:

1. CAREFULLY REMOVE ALUMINUM STORE FRONT. DO NOT DAMAGE MASONRY. REMOVE THE ALUMINUM STORE FRONT AFTER THE TEMPORARY BOILER IS REMOVED.
2. AFTER THE REMOVAL OF THE TEMPORARY BOILER AND PIPES, FURNISH AND INSTALL THE NEW ROLL-UP DOOR AS SHOWN ON SHEET AE102

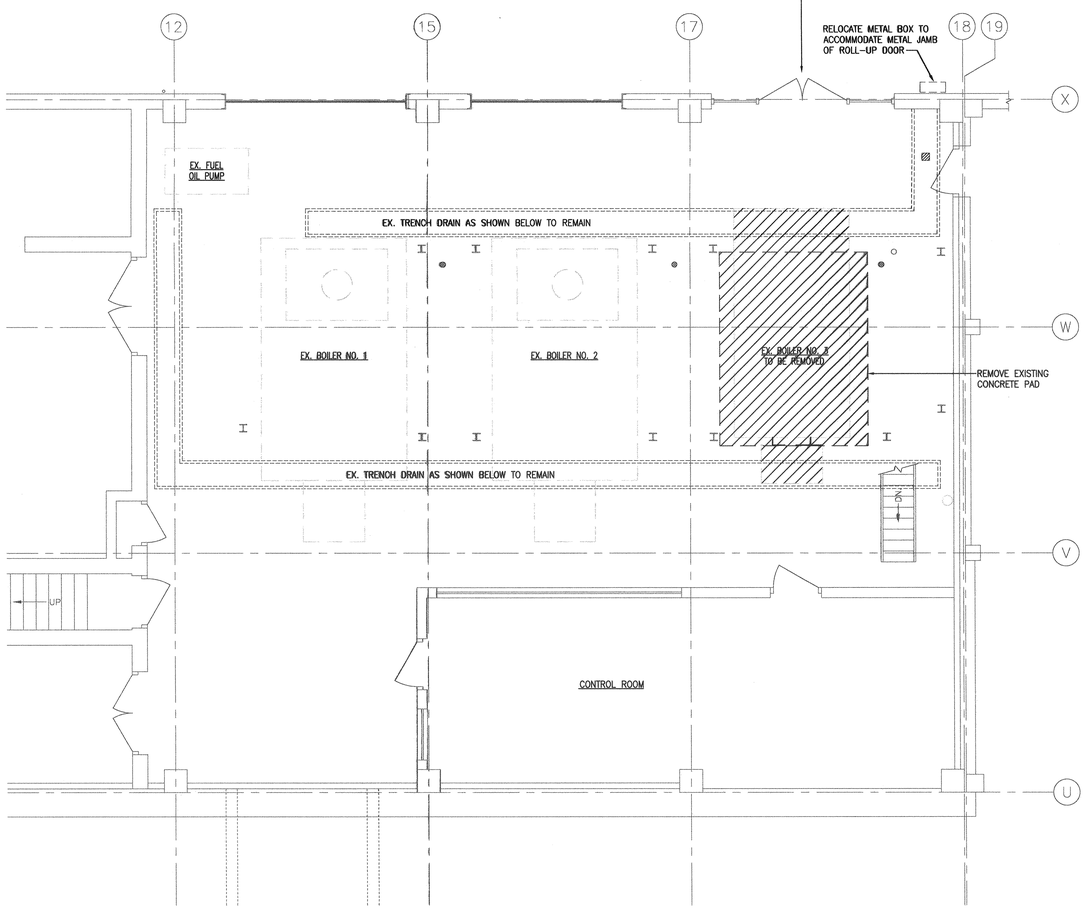

1 **BOILER ROOM - DEMOLITION PLAN**
SCALE: 1/4" = 1'-0"

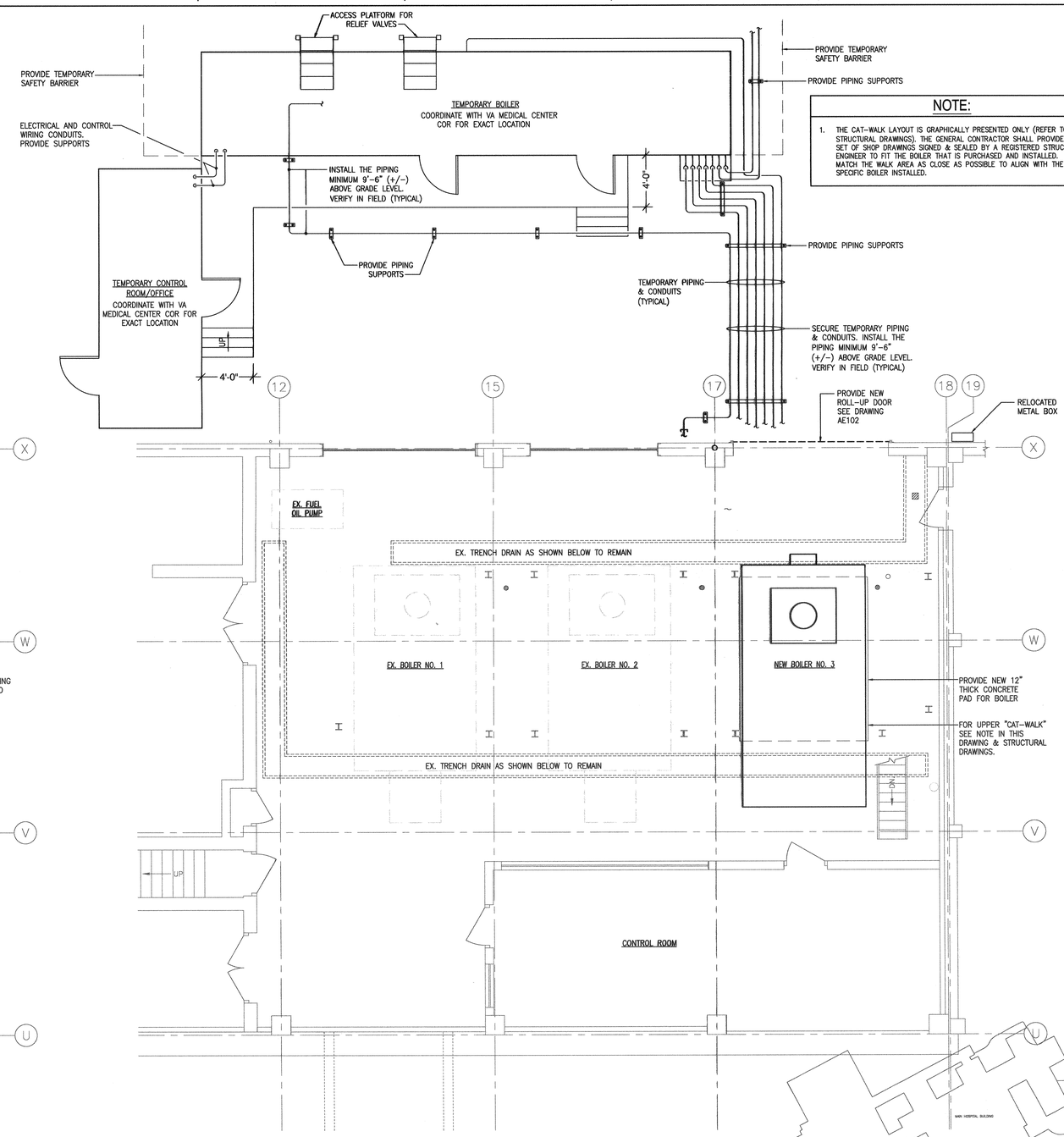

NOTE:

1. THE CAT-WALK LAYOUT IS GRAPHICALLY PRESENTED ONLY (REFER TO STRUCTURAL DRAWINGS). THE GENERAL CONTRACTOR SHALL PROVIDE A SET OF SHOP DRAWINGS SIGNED & SEALED BY A REGISTERED STRUCTURAL ENGINEER TO FIT THE BOILER THAT IS PURCHASED AND INSTALLED. MATCH THE WALK AREA AS CLOSE AS POSSIBLE TO ALIGN WITH THE SPECIFIC BOILER INSTALLED.

2 **BOILER ROOM - NEW WORK PLAN**
SCALE: 1/4" = 1'-0"

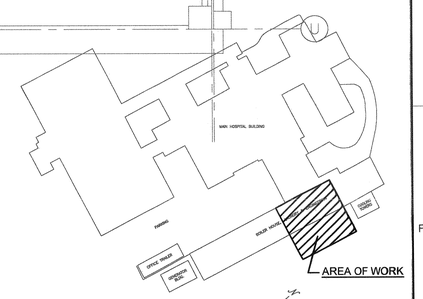

KEY PLAN
NO SCALE

NO.	DESCRIPTION	DATE
	30% SUBMISSION	02-23-2022
	30% SUBMISSION (RESUBMISSION)	12-30-2022
	60% SUBMISSION	11-24-2023
	100% SUBMISSION	03-27-2024
	100%-2ND SUBMISSION	05-14-2024
	BID DOCUMENTS	05-20-2025

VA FORM 08-6231

CONSULTANTS:

Architectural:
STATE OF WEST VIRGINIA
FRANK V. STURGEON
No. 4866
REGISTERED ARCHITECT
SIGNATURE 5-20-25

ARCHITECT/ENGINEERS:

A DESIGN GROUP, LLC
ART - ARCHITECTURE - ENGINEERING
2787 HILL ROAD
VIENNA, VA 22181

FRANK V. STURGEON, AIA

AMBRISH RASTOGI, PE

703.938.5226
FRANK@ADG10.COM

Drawing Title: **BOILER ROOM FLOOR PLANS**

Approved: Project Director

Project Title: **Replace Boiler #3**

Location: Clarksburg WV Medical Center

Date: 05/20/2025 | Checked: FVS | Drawn: CCU

Project Number: **540-22-103**

Building Number: NO. 1

Drawing Number: **AE101**

Dwg. 8 of 25

Office of Construction and Facilities Management

Department of Veterans Affairs

IF THIS SHEET IS NOT 30" X42" FULL SIZE, USE GRAPHIC SCALE.

SPECIFICATIONS	
DOOR MARK	ITEM "A"
QUANTITY	ONE
WIDTH	12'-0"
HEIGHT	14'-0"
OPERATION	RIGHT HAND, CAST GEAR CHAIN HOIST
MOUNT	INTERIOR, FACE OF WALL
ENDLOCKS	ALTERNATE MALLEABLE IRON
WINDLOAD	N/A DUE TO PASS DOOR
WINDLOCKS	REQ'D EVERY SIXTH SLAT
MATERIAL	
CURTAIN	22 GA. GALVANIZED STEEL
HOOD	24 GA. GALVANIZED STEEL
GUIDES	STEEL ∟'s
BOTTOM BAR	STEEL ⅃'s
FINISH	
FERROUS SURFACES	POWDER COATED, STD BLACK
CURTAIN	BAKED ON GRAY POLYESTER TOP COAT
HOOD	BAKED ON GRAY POLYESTER TOP COAT

NOTES:
1.

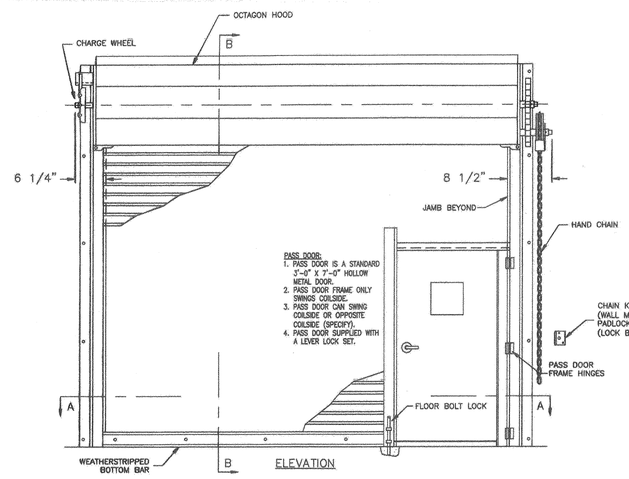

ELEVATION

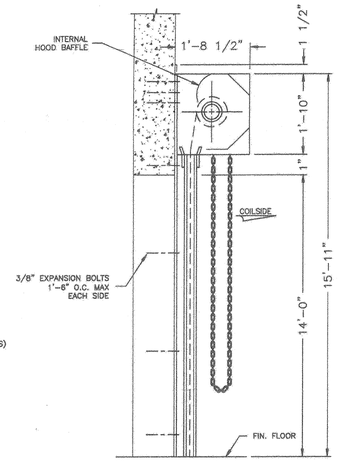

SECTION B-B

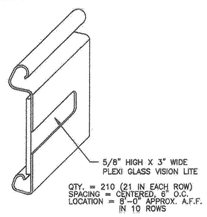

VISION LITE DETAIL

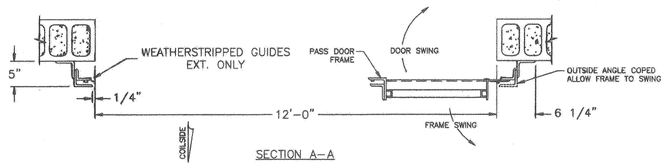

SECTION A-A

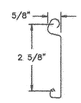

F265 SLAT SECTION

DISTRIBUTOR: OVERHEAD DOOR CO. OF MID OHIO VALLEY P.O.# _____

DATE	REVISION	SHEET NO. 1 OF 1	JOB NO.
		DR. BY T.E.	DATE: 9/26/23	SCALE: N.T.S.

OVERHEAD DOOR — the original since 1921

VETERANS CENTER CLARKSBURG WV
FRANK STURGEON ARCHITECT

DRAWING NO.	SERIES
D23-2072	620

OVERHEAD DOOR CORPORATION
2501 S. STATE HWY 121, STE 200
LEWISVILLE, TX 75067

ROLL UP DOOR DETAIL

SCALE: NOT TO SCALE

NOTE:
1. PROVIDE ELECTRIC MOTOR AND CHAIN (MANUAL) OPERATED DOOR. VOLTAGE 120 V, 1 PHASE, ½ HP MOTOR

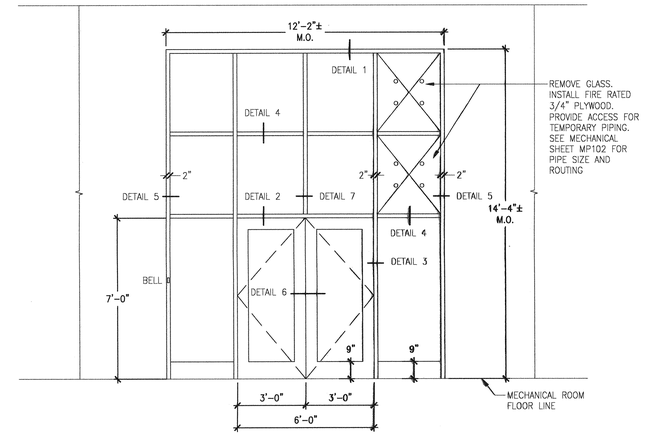

FRONT ELEVATION

SCALE: 3/8" = 1'-0"

NOTE: AFTER TEMPORARY BOILER IS REMOVED, REMOVE STORE FRONT – INSTALL NEW ROLL-UP DOOR.

MO = MASONRY OPENING

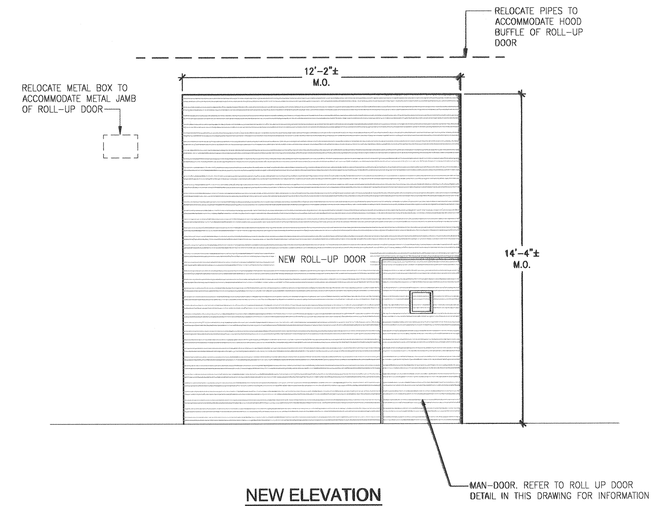

NEW ELEVATION

SCALE: NONE

GENERAL CONTRACTOR TO VERIFY MASONRY OPENING PRIOR TO DEVELOPING OVER-HEAD DOOR SHOP DRAWINGS.

NO.	DESCRIPTION	DATE
	30% SUBMISSION	02-23-2022
	30% SUBMISSION (RESUBMISSION)	12-30-2022
	60% SUBMISSION	11-24-2023
	100% SUBMISSION	03-27-2024
	100%-2ND SUBMISSION	05-14-2024
	BID DOCUMENTS	05-20-2025

CONSULTANTS:

Architect: STATE OF WEST VIRGINIA — FRANK V. STURGEON No. 4000 — REGISTERED ARCHITECT
SIGNATURE: 5/20/25

ARCHITECT/ENGINEERS:

A DESIGN GROUP, LLC
ART - ARCHITECTURE - ENGINEERING
2787 HILL ROAD
VIENNA, VA 22181

FRANK V. STURGEON, AIA

AMBRISH RASTOGI, PE

703.938.5226
FRANK@ADG10.COM

Drawing Title: **DOOR, ELEVATIONS AND DETAILS**

Approved: Project Director

Project Title: **Replace Boiler #3**

Location: Clarksburg WV Medical Center

Date: 05/20/2025 | Checked: FVS | Drawn: CCU

Project Number: **540-22-103**

Building Number: NO. 1

Drawing Number: **AE102**

Dwg. 9 of 25

Office of Construction and Facilities Management

Department of Veterans Affairs

VA FORM 08-6231

IF THIS SHEET IS NOT 30" X42" FULL SIZE, USE GRAPHIC SCALE:

one and one half inches = one foot
one inch = one foot
three quarters inch = one foot
one half inch = one foot
three eighths inch = one foot
one quarter inch = one foot
one eighth inch = one foot

GENERAL NOTES

1. BEFORE SUBMITTING BID, THE GENERAL CONTRACTOR SHALL VISIT THE JOB SITE AND EXAMINE AND BECOME FULLY ACQUAINTED WITH THE EXISTING CONDITIONS RELATING TO THE SERVICES, SYSTEMS, SITE AND BUILDING. (ALL SERVICES THAT ARE SUPPORTING THE ADJOINING AREAS SHOULD BE MAINTAINED AT ALL TIMES).
2. THE CONTRACTOR SHALL FURNISH AND INSTALL ALL SUPPORTS, HANGERS, EQUIPMENT, VALVES, ACCESSORIES, PIPING, WIRING, PANELS, ETC., AS REQUIRED BY TRADE, AND SHALL PERFORM DEMOLITION AND MODIFICATION WORK, AS REQUIRED FOR COMPLETE AND OPERABLE SYSTEMS WITHOUT ADDITIONAL COST TO THE OWNER.
3. CONTRACTOR SHALL ARRANGE FOR ALL CERTIFICATES, INSPECTIONS, ETC., FOR ALL WORK DONE UNDER THIS CONTRACT.
4. ALL WORK SHALL BE DONE IN COMPLIANCE WITH ALL LAWS, ORDINANCES, CODES, ETC. OF ANY GOVERNING BODY HAVING JURISDICTION AND IN FULL COMPLIANCE WITH VAMC REGULATIONS AND REQUIREMENTS.
5. ALL APPLICABLE ITEMS SHALL BEAR THE UNDERWRITERS LABORATORIES (UL) LABEL AND SHALL BE FACTORY MUTUAL APPROVED. ALL EQUIPMENT SHALL BE NEW UNLESS SPECIFICALLY NOTED OTHERWISE ON THE DRAWINGS.
6. ALL WORK SHALL BE CAREFULLY COORDINATED WITH ALL TRADES INVOLVED, AND THE CONTRACTOR SHALL PROVIDE PROPER CONNECTIONS, FITTINGS, EQUIPMENT, VALVES, PIPING, ETC., FOR ALL EQUIPMENT FURNISHED BY THE OWNER OR THE TRADES INVOLVED IN THIS CONTRACT.
7. DRAWINGS ARE TO BE CONSIDERED DIAGRAMMATIC AND DO NOT NECESSARILY INDICATE THE ACTUAL LOCATION OR ROUTING OF EQUIPMENT AND PIPING. DRAWINGS SHALL BE FOLLOWED AS CLOSELY AS CONDITIONS ALLOW TO COMPLETE THE INTENT OF THE CONTRACT. CONTRACTOR SHALL MAKE MINOR ADJUSTMENTS, OFFSETS, ELBOWS OR RESIZING OF DUCTS (WHILE MAINTAINING EQUIVALENT FREE AREA) AS REQUIRED BY ACTUAL FIELD CONDITIONS. THE RIGHT IS RESERVED BY THE ENGINEER TO MAKE MINOR CHANGES IN LOCATIONS AND ARRANGEMENTS, WHEN REQUIRED BY JOB DEVELOPMENT, WITHOUT ADDITIONAL COMPENSATION TO THE CONTRACTOR.
8. THE CONTRACTOR SHALL SUBMIT SHOP DRAWINGS OF MANUFACTURED ITEMS REQUIRED ON THIS PROJECT, AS REQUIRED BY THE SPECIFICATION. A MINIMUM OF 8 COPIES SHALL BE SUBMITTED. SHOP DRAWINGS SHALL BE SUBMITTED AT MINIMUM 1/4" SCALE. THE SHOP DRAWINGS SHALL INCLUDE ONE ELECTRONIC COPY (CD), AND TWO HARD COPIES (REPRODUCIBLE BLACKLINE PRINTS). ENGINEER'S APPROVAL OF SHOP OR SETTING DRAWINGS SHALL ONLY BE CONSTRUED TO APPLY TO GENERAL LAYOUT AND CONFORMANCE TO THE DESIGN CONCEPT OF THE PROJECT AND FOR COMPLIANCE WITH THE GENERAL REQUIREMENTS OF THE CONTRACT DOCUMENTS. THE RESPONSIBILITY OF ANY DEVIATIONS FROM THE REQUIREMENTS OF THE CONTRACT DOCUMENTS SHALL REMAIN THE CONTRACTOR'S, UNLESS CONTRACTOR HAS, IN WRITING, SPECIFICALLY CALLED THE ENGINEER'S ATTENTION TO SUCH DEVIATIONS AT THE TIME OF SUBMISSION AND HAS RECEIVED THE ENGINEER'S WRITTEN APPROVAL OF SUCH DEVIATIONS.
9. GENERAL CONTRACTOR TO PROVIDE ALL REQUIRED TEMPORARY UTILITIES (POWER & GAS) AND PAY FOR ALL TEMPORARY AND PERMANENT UTILITIES UP TO SUBSTANTIAL COMPLETION, WHEN INSTALLED WORK IS READY FOR START-UP AND PRE-FUNCTIONAL TESTS.
10. THE HVAC CONTRACTOR SHALL PERFORM ALL CUTTING AND PATCHING AS REQUIRED FOR THEIR RESPECTIVE WORK, EXCEPT THAT STRUCTURALLY FRAMED OPENINGS SHALL BE CUT AND FRAMED BY THE GENERAL CONTRACTOR. ALL HOLES IN MASONRY, FLOORS, AND WALLS SHALL BE CORE DRILLED. EDGES OF TRENCHES IN EXISTING CONCRETE FLOORS SHALL BE SAW CUT. MAINTAIN FIRE RATING OF FLOORS AND WALLS.
11. LOCATE AND IDENTIFY ALL CONCEALED BUILDING SYSTEMS PRIOR TO EXECUTION OF THIS WORK INCLUDING CUTTING, EXCAVATING, AND/OR REMOVING ANY PART OF THE SYSTEM COMPONENTS FOR THE BUILDING CONSTRUCTION. CAREFULLY PERFORM ALL WORK TO PREVENT DAMAGE TO THE CONCEALED SYSTEMS OR STRUCTURE. ANY SUCH DAMAGE OR INJURIES RESULTING FROM PERFORMANCE OF THE WORK OF THIS CONTRACT IS THE SOLE RESPONSIBILITY OF THE CONTRACTOR.
12. DEMONSTRATE SYSTEM OPERATION TO OWNER. THE DEMONSTRATION OF SYSTEM OPERATION IN ACCORDANCE WITH THE VA SPECIFICATIONS AND COMMISSIONING REQUIREMENTS.
13. ALL WORK SHALL BE PERFORMED BY QUALIFIED MECHANICS, SPECIALIZING IN THEIR PARTICULAR TRADE, UTILIZING PROPER TOOLS AND TECHNIQUES TO ACCOMPLISH THE WORK. ALL WORK SHALL BE OF THE HIGHEST QUALITY, CONSISTENT WITH THE INDUSTRY'S BEST PRACTICES. WORK JUDGED TO BE SUBSTANDARD SHALL BE REMOVED AND RE-DONE AT CONTRACTOR'S EXPENSE.
14. FOR TYPICAL STEAM AND HYDRONIC PIPING CONNECTIONS TO EQUIPMENT SEE STANDARD EQUIPMENT DETAILS.
15. SUBMIT TO OWNER: FINAL APPROVED "AS-BUILT" DRAWINGS, ALL "TEST-CHECK-AND START-UP" CERTIFICATES, O & M DOCUMENTATION AS PER ASHRAE GUIDELINE 4, APPROVED BALANCING REPORTS, WARRANTY CERTIFICATES, FINAL PUNCH LIST RESPONSE INDICATING RESOLUTION OF ALL ISSUES, RECEIPT FOR SUBMISSION OF ALL SPARE FILTERS, SPRINKLERS, MANUALS, PARTS, ETC, AND RECEIPT FOR OWNER INSTRUCTION. ALSO PROVIDE THE DRAWINGS IN AUTOCAD FORMAT ON CD.
16. PROVIDE SEISMIC-RESTRAINT HANGERS AND SUPPORT FOR ALL SYSTEMS, PIPING, ETC. AS PER SEISMIC DESIGN OF BUILDINGS STANDARD AND AS PER VAMC MEDICAL CENTER DESIGN GUIDE LINES. THE CONTRACTOR SHALL PROVIDE THE SUPPORTS ON DESIGN BUILD BASIS. THE DESIGN OF SUPPORTS SHALL BE DONE BY CERTIFIED PROFESSIONAL STRUCTURAL ENGINEER.
17. THE CONTRACTOR SHALL FIELD VERIFY EXACT LOCATION OF ALL PIPING, EQUIPMENT, VALVES, SENSORS, FITTINGS, ACCESSORIES AND MATERIALS IN THE FIELD PRIOR TO STARTING ALL WORK.
18. EXISTING PIPING AND EQUIPMENT SIZES NOTED ARE FOR THE CONVENIENCE OF THE CONTRACTOR ONLY AND ARE NOT WARRANTED TO BE CORRECT. CONTRACTOR SHALL VERIFY ALL SIZES IN THE FIELD.
19. WHEN WORKING IN AND AROUND THE EXISTING BUILDING, EXTREME CARE SHALL BE EXERCISED WITH REGARD TO PROTECTION OF THE EXISTING STRUCTURES AND MECHANICAL AND ELECTRICAL SERVICES WHICH WILL REMAIN. REPAIR, REPLACE, OR RESTORE TO THE SATISFACTION OF THE MEDICAL CENTER CONSTRUCTION MANAGER, ALL EXISTING WORK DAMAGED IN THE PERFORMANCE OF THE DEMOLITION AND/OR NEW WORK.
20. EXISTING PIPING NO LONGER REQUIRED TO REMAIN IN SERVICE (SHOWN OR OTHERWISE) SHALL BE DISCONNECTED AND REMOVED BACK TO SERVICE MAINS UNLESS OTHERWISE INDICATED OR NOTED ON PLANS. REMOVE EXISTING PIPE HANGERS, SUPPORTS, VALVES, ETC. EXISTING PIPING INDICATED OR REQUIRED TO REMAIN IN SERVICE OR IN PLACE SHALL BE CAPPED, PLUGGED, OF OTHERWISE SEALED. NO EXISTING PIPING SHALL BE LEFT OPEN-ENDED.
21. EXISTING MECHANICAL EQUIPMENT, PIPING, AND MATERIALS AFFECTED BY DEMOLITION OR NEW WORK INSTALLATION AND REQUIRED TO REMAIN IN SERVICE SHALL BE RE-INSTALLED OR SUPPORTED AS REQUIRED IN ACCORDANCE WITH THE NEW WORK SPECIFICATIONS. ALL WORK SHALL BE COMPLETED TO THE SATISFACTION ON THE COR AND AT NO ADDITIONAL CONTRACT COST.
22. THE CONTRACTOR SHALL REMOVE ALL ASSOCIATED ACCESSORIES, CONTROLS, ENCLOSURES, SUPPORTS, HANGERS, PADS, ETC. WITH ALL EQUIPMENT SHOWN TO BE DEMOLISHED. CONTRACTOR SHALL REPAIR AND PAINT DAMAGED SURFACES AND ALL SURFACES BEHIND ALL EQUIPMENT SHOWN TO BE DEMOLISHED TO MATCH EXISTING ADJACENT SURFACES.
23. THE CONTRACTOR SHALL BE RESPONSIBLE FOR THE REMOVE OF ALL FLUIDS CONTAINED WITHIN ALL PIPING, EQUIPMENT, AND TANKS. NO FLUIDS SHALL BE ALLOWED TO BE DISCHARGED TO SANITARY OR STORM LINES WITHOUT WRITTEN APPROVAL FROM THE COR. THE CONTRACTOR SHALL BE RESPONSIBLE FOR CONTAINING, HAULING, AND PROPERLY AND LEGALLY DISPOSING OF ALL REMOVED FLUIDS FROM THE SITE.
24. THE CONTRACTOR SHALL PROVIDE LOW POINT DRAINS AS REQUIRED TO COMPLETELY DRAIN ALL NEW WORK SYSTEMS. THE CONTRACTOR SHALL ALSO PROVIDE HIGH POINT MANUAL AIR VENTS TO PURGE FILLING OF ALL NEW WORK SYSTEMS.
25. ALL 2" AND SMALLER PIPING TO BE FIELD ROUTED. ROUTE OF PIPE INCLUDING CLEARANCE IS THE RESPONSIBILITY OF THE CONTRACTOR.
26. ALL CONTROL VALVES AND IN-LINE INSTRUMENTATION SHALL BE INSTALLED BY THE CONTRACTOR. THE CONTRACTOR IS RESPONSIBLE FOR PROVIDING ALL FITTINGS REQUIRED FOR INSTRUMENTATION POINTS. REFER TO MECHANICAL INSTRUMENTATION INSTALLATION DETAILS FOR INFORMATION.
27. ALL PIPING AND VALVES SHALL BE THOROUGHLY FLUSHED CLEAN AND BLOWN OUT WITH WATER, AIR, OR STEAM.
28. UNIONS, BUSHINGS, AND/OR REDUCING INSERTS, ETC., NOT SHOWN ON THE DRAWINGS BUT ARE REQUIRED FOR INSTALLATION SHALL BE FURNISHED AND INSTALLED BY THE CONTRACTOR.
29. ALL DEMOLISHED EQUIPMENT, PIPING, VALVES, ACCESSORIES, FITTINGS AND RUBBISH SHALL BE CLEARED, TRANSPORTED AND DISPOSED OF IN A LAWFUL AND RESPONSIBLE MANNER. THE PREMISES-INTERIOR AND EXTERIOR SHALL BE MAINTAINED IN A REASONABLY CLEAN AND ORDERED STATE FOLLOWING EACH DAY'S CONSTRUCTION PROCESS. UNDER NO CIRCUMSTANCES SHALL CONSTRUCTION DEBRIS BE LEFT EXPOSED TO ACCESS BY THE PUBLIC.
30. COORDINATION DRAWINGS:
    A. SUBMIT COORDINATION DRAWINGS, AT A MINIMUM OF 1/4" SCALE, OF ALL TRADES INCLUDING BUT NOT LIMITED TO EQUIPMENT, ARCHITECTURAL ITEMS, STRUCTURAL MEMBERS, PIPING, CONDUITS, FIRE PROTECTION AND ALARM SYSTEMS, ELECTRICAL SYSTEMS, FUEL PIPING SYSTEM, DRAIN SYSTEMS, GAS SYSTEM, ETC.
    B. COORDINATION DRAWINGS SHALL BE BASED ON THE ACTUAL FIELD CONDITIONS. CONTRACTOR SHALL ENSURE THAT WORK IN EACH PHASE IS CARRIED OUT WITHOUT ANY DISRUPTION OF UTILITIES TO AREA IN OTHER PHASES.
    C. CONTRACTOR SHALL FIELD COORDINATE TO PROVIDE TEMPORARY ALTERNATIVE FEED OF UTILITIES TO AREAS THAT ARE IN OPERATION BEFORE PERFORMING THE DEMOLITION/RELOCATION/RAISING OF UTILITIES. THE CONTRACTOR SHALL SUBMIT DRAWING/DESCRIPTION DOCUMENTS FOR ANY PROPOSED TEMPORARY UTILITY FEEDS FOR COR APPROVAL.
    D. THIS WORK SHALL BE CARRIED OUT WITH MINIMUM INCONVENIENCE/DISRUPTION OF SERVICES. ALL WORK MUST BE COORDINATED WITH BUILDING MAINTENANCE GROUP AND USERS.

MECHANICAL ABBREVIATIONS

5C	5 PSIG CONDENSATE	F	FIRE/SPRINKLER PIPING	N/A	NOT APPLICABLE
5S	5 PSIG STEAM	FCU	FAN COIL UNIT	NO.	NUMBER
15C	15 PSIG CONDENSATE	FD	FORCED DRAFT		
15S	15 PSIG STEAM	F.DR.	FLOOR DRAIN	O.D.	OUTSIDE DIAMETER
50C	50 PSIG CONDENSATE	FIN.	FINISHED	OPER.	OPERATING
50S	50 PSIG STEAM	FLR.	FLOOR		
110C	110 PSIG CONDENSATE	FO	FUEL OIL	PA	PLANT AIR
110S	110 PSIG STEAM	FOR	FUEL OIL RETURN	PC	PUMPED CONDENSATE
		FOS	FUEL OIL SUPPLY	PCSUCT	PUMPED CONDENSATE PUMP SUCTION
AIR	NON-COMPRESSED AIR	FOSUCT	FUEL OIL PUMP SUCTION	PPH	POUNDS PER HOUR
APPROX.	APPROXIMATELY	FW	FEEDWATER	PRESS.	PRESSURE
ASSY.	ASSEMBLY	FWEC	FEEDWATER FROM ECONOMIZER	PRV	PRESSURE REGULATING/REDUCING VALVE
		FWP	FEEDWATER PUMPED	PSI	POUNDS PER SQUARE INCH
BCP	BOILER CONTROL PANEL	FWS	FEEDWATER PUMP SUCTION	PSIG	POUNDS PER SQUARE INCH GAUGE
BCW	BEARING COOLING WATER			PSV	PRESSURE SAFTEY VALVE
BD	BLOWDOWN	G	NATURAL GAS		
BLDG.	BUILDING	G(I)	NATURAL GAS (IGNITOR)	RECIRC.	RECIRCULATION
BLR.	BOILER	GA.	GAUGE	REL.	RELOCATE, RELOCATED
BMS	BURNER MANAGEMENT SYSTEM	GD	GRAVITY DAMPER	RM	ROOM
BO	BLOWOFF	GPH	GALLONS PER HOUR	R.R.	REMOVE AND RE-INSTALL EXISTING
				R.X.	REMOVE EXISTING
CA	COMPRESSED AIR	H.O.A.	HAND, ON, AUTOMATIC		
CBD	CONTINUOUS BLOWDOWN	HP	HORSEPOWER	SA	SUPPLY AIR
CC	CAMPUS CONDENSATE	HPR	HIGH PRESSURE STEAM RETURN	SAN.	SANITARY
CF	CHEMICAL FEED	HPS	HIGH PRESSURE STEAM	SCHED.	SCHEDULE
CFH	CUBIC FEET PER HOUR	HR.	HOUR	S.S.	STAINLESS STEEL
CHR	CHILLED WATER RETURN	H.R.S.	HOT ROLLED STEEL	SW	SOFTWATER
CHS	CHILLED WATER SUPPLY	HR	HEATING WATER RETURN		
CMU	CONCRETE MASONRY UNIT	HS	HEATING WATER SUPPLY	TEMP.	TEMPERATURE
COND.	CONDENSATE	HW	HOT WATER	THK.	THICK
CONN.	CONNECTION	HWR	HOT WATER RECIRCULATION	TYP.	TYPICAL
CPLG	COUPLING	H.X.	HEAT EXCHANGER		
CT	CONDENSATE TRANSFER			VAC	VACUUM
CR	CONDENSER WATER RETURN	IA	INSTRUMENT AIR	VTR	VENT THROUGH ROOF
CS	CONDENSER WATER SUPPLY	ID	INDUCED DRAFT		
CW	COLD WATER	I.D.	INSIDE DIAMETER	W/	WITH
DA.	DEAERATOR	LB(S).	POUND(S)	&	AND
DESIG.	DESIGNATION	LPG	LOW PRESSURE GAS (BOTTLED PROPANE)	°F	DEGREES FAHRENHEIT
DIA.	DIAMETER	LPR	LOW PRESSURE STEAM RETURN	ø	DIAMETER
DIFF.	DIFFERENTIAL	LPS	LOW PRESSURE STEAM	O2	OXYGEN
DR.	DRAIN			%	PERCENT
DWG.	DRAWING	MANUF.	MANUFACTURER	#	POUND(S)
		MAX.	MAXIMUM	℄	CENTER LINE
ED	EQUIPMENT DRAIN	MCC	MOTOR CONTROL CENTER		
EF	EXHAUST FAN	MIN.	MINIMUM		
EMER.	EMERGENCY	MPR	MEDIUM PRESSURE STEAM RETURN		
EX.	EXISTING	MPS	MEDIUM PRESSURE STEAM		
		M.W.	MINERAL WOOL		

MECHANICAL LEGEND

SYMBOL	DESCRIPTION
—A—	COMPRESSED AIR
	EXISTING
	DEMOLITION/NEW WORK
	DISCONNECT FROM EXISTING
	CONNECT TO EXISTING
	ANGLE VALVE
	BALL VALVE (NORMALLY OPEN)
	BALL VALVE (NORMALLY CLOSED)
MS	BALL VALVE WITH MEMORY STOP
	BALANCING VALVE
	BUTTERFLY VALVE
	BALL/BUTTERFLY VALVE IN RISE
	BLOWDOWN VALVE
—BO—	BOILER BLOW-OFF
—BWS—	BOILER FEED SAMPLE
	CHECK VALVE
	CONTROL VALVE (GATE)
	CONTROL VALVE (BUTTERFLY)
—CF—	CHEMICAL FEED
	DOUBLE CHECK VALVE
—D—	DRAIN LINE
M	FLOWMETER (MECHANICAL USAGE)
	FLOWMETER (VENTURI)
	FLOWMETER (ANNUBAR)
	FLOWMETER (ORIFICE)
—FOS—	FUEL OIL SUPPLY
—FOR—	FUEL OIL RETURN
—FWPD—	FEED WATER PUMP DISCHARGE
—G—	GAS LINE
	GLOBE VALVE
—LPG—	LIQUEFIED PETROLEUM GAS IGNITER FUEL
	PLUG VALVE
P	PRESSURE REDUCING/REGULATING VALVE
ES	EMERGENCY STOP/PANIC BUTTON

SYMBOL	DESCRIPTION
	PRESSURE SAFETY VALVE W/ DRIP PAN ELBOW
	SHUT-OFF VALVE (NORMALLY OPEN)
	SHUT-OFF VALVE (NORMALLY CLOSED)
	SHUT-OFF VALVE IN RISE
	SOLENOID VALVE
—V—	VENT LINE
C	SOLENOID VALVE IN RISE
STB	SOOT BLOWER VALVE
	NON-RETURN VALVE
	STRAINER / FILTER
	STRAINER W/ BLOWDOWN VALVE
	THREE-WAY VALVE
	UNION
	BLANKED OFF
	CONCENTRIC REDUCER
	ECCENTRIC REDUCER
	FLANGES
	PIPE CAP
	PIPE DROP
	PIPE RISE
	VENT THROUGH ROOF
	BACKFLOW PREVENTOR
	EXISTING STEAM TRAP
T-XX	STEAM TRAP ASSEMBLY
	ELECTRIC SIGNAL
	MECHANICAL LINKAGE
	PNEUMATIC SIGNAL
	CAPILLARY TUBE
1	SECTION DESIGNATION
	DRAWING SECTION IS ON
	DRAWING SECTION IS FROM

CONTROL INSTRUMENTATION LEGEND

SYMBOL	DESCRIPTION
XXXX XXXX	BASIC INSTRUMENTATION SYMBOL LOCAL MOUNTED
XXXX XXXX	FRONT PANEL MOUNTED
XXXX XXXX	LOCAL PANEL MOUNTED
XXXX XXXX	REAR PANEL MOUNTED
XXXX XXXX	INSTRUMENT FUNCTION IN DIGITAL SCADA SYSTEM
XXXX XXXX	DIGITAL CONTROL SYSTEM SOFTWARE FUNCTION
XXX XXX	BUILDING AUTOMATION SYSTEM
XXXX XXXX	INSTRUMENTATION DESCRIPTION (SEE INSTRUMENTATION DESCRIPTION TABLE)
	INSTRUMENT LOOP NUMBER
B	BURNER MANAGEMENT SYSTEM INTERFACE
C	COMBUSTION CONTROL SYSTEM INTERFACE
D	DRAFT CONTROL SYSTEM INTERFACE
F	FEEDWATER CONTROL SYSTEM INTERFACE
I	EQUIPMENT INTERLOCK
P	PLANT MASTER INTERFACE
I/P	ELECTRIC TO PNEUMATIC CONVERTER

INSTRUMENTATION DESCRIPTION TABLE

	FIRST LETTER		SUCCEEDING LETTER		
	MEASURED OR INITIATED VARIABLE	MODIFIER	READOUT OR PASSIVE FUNCTION	OUTPUT FUNCTION	MODIFIER
A	ANALYSIS		ALARM	ALARM/AUTOMATIC	
B	BURNER FLAME		USER'S CHOICE	USER'S CHOICE	USER'S CHOICE
C	CONDUCTIVITY			CONTROL	CLOSED
D	DENSITY (MASS) OR SPECIFIC GRAVITY	DIFFERENTIAL			
E	VOLTAGE (EMF)		SENSOR (PRIMARY ELEMENT)		
F	FLOW RATE	RATIO (FRACTION)			FULL
G	GAUGING (DIMENSIONAL)		GLASS, VIEWING DEVICE		
H	HAND (MANUALLY INITIATED)				HIGH
I	CURRENT (ELECTRICAL)		INDICATE		
J	POWER	SCAN			
K	TIME OR TIME SCHEDULE	TIME RATE OF CHANGE		CONTROL STATION	
L	LEVEL		LIGHT (PILOT)		LOW
M	MOISTURE, HUMIDITY	MOMENTARY			MIDDLE OR INTERMEDIATE
N	CONSISTENCY		USER'S CHOICE	USER'S CHOICE	USER'S CHOICE
O	OPACITY		ORIFICE (RESTRICTION)		OPEN
P	PRESSURE OR VACUUM		POINT (TEST) CONNECTION		
Q	QUALITY OR EVENT	INTEGRATE OR TOTALIZE			
R	RADIOACTIVITY		RECORD OR PRINT		
S	SPEED OR SOLENOID FREQUENCY	SAFETY		SWITCH	
T	TEMPERATURE			TRANSMIT	
U	MULTIVARIABLE		MULTIFUNCTION	MULTIFUNCTION	MULTIFUNCTION
V	VISCOSITY OR VIBRATION			VALVE, DAMPER, OR LOUVER	
W	WEIGHT OR FORCE		WELL		
X	UNCLASSIFIED		UNCLASSIFIED	UNCLASSIFIED	UNCLASSIFIED
Y	USER'S CHOICE			RELAY OR COMPUTE	
Z	POSITION			DRIVE, ACTUATE, OR UNCLASSIFIED FINAL CONTROL ELEMENT	

NOTE-COMMISSIONING WORK:

1. COMMISSIONING EFFORTS SHOULD BE COORDINATED BY THE GENERAL CONTRACTOR WITH COR, SHALL INCLUDE (AT A MINIMUM) THE CONTROLS CONTRACTOR, BALANCING CONTRACTOR, FACTORY REPRESENTATIVES FOR THE EQUIPMENT MANUFACTURERS, AND THE MECHANICAL CONTRACTOR.
2. COMMISSIONING SHALL BE IN ACCORDANCE WITH ASHRAE "GUIDELINE 1", LATEST VERSION.
3. COMMISSIONING EFFORTS SHALL BE COORDINATED WITH VAMC COR AND BUILDING OPERATING PERSONNEL WHO SHALL BE FULL PARTICIPANTS IN ALL OPERATIONS. AS PART OF THIS PROCESS, PROVIDE INSTRUCTION PERIOD TO OWNER DESIGNATED PERSONNEL, DEMONSTRATING TYPICAL SERVICE, MAINTENANCE AND TROUBLE-SHOOTING PROCEDURES FOR THE VARIOUS SYSTEMS. INSTRUCTION PERIOD SHALL BE NO LESS THAN EIGHT (8) HOURS, SCHEDULED AT OWNER'S CONVENIENCE.
4. COMMISSIONING SHALL INCLUDE BOILER, CONTROLS, AUTOMATIC TEMPERATURE CONTROL SYSTEMS, CONTROLS, AIR & WATER DISTRIBUTION SYSTEMS, ETC.
5. THE CONTRACTOR SHALL COORDINATE WITH COR FOR MULTIPLE TRAINING SESSIONS.

NOTES:

1. THE CONTRACTOR SHALL RETAIN THE SERVICE OF INDEPENDENT CERTIFIED BOILER INSPECTOR FOR THE PROPER INSTALLATION OF BOILER AND IT'S ASSOCIATED ACCESSORIES, OPERATION OF ENTIRE SYSTEM INCLUDING BOILER AND CONTROLS. THE CONTRACTOR SHALL COORDINATE WITH COR FOR THE CERTIFICATION REQUIREMENTS OF AUTHORITIES HAVING JURISDICTION.
2. THE CONTRACTOR SHALL PROVIDE A SERVICE INTERRUPTION NOTICE REQUEST TO COR AT LEAST 14 DAYS IN ADVANCE FOR ANY UTILITY OUTAGES. THE CONTRACTOR SHALL PROVIDE UTILITY OUTAGE SCHEDULE AND SHALL ADDRESS ALL CRITICAL POINTS WHERE OUTAGES ARE REQUIRED TO PERFORM THE TASK, TO COR APPROVAL.
3. PROVIDE DDC AUTOMATIC TEMPERATURE CONTROL SYSTEM FOR ALL NEW EQUIPMENT, AND INTERLOCK WITH EXISTING BUILDING AUTOMATION SYSTEMS.
4. THE CONTRACTOR SHALL COORDINATE WITH EXISTING BUILDING ROOFING COMPANY FOR ROOF PENETRATIONS AND REPAIR WORKS TO MAINTAIN ROOF WARRANTY.
5. THE CAT-WALK LAYOUT IS GRAPHICALLY PRESENTED ONLY (REFER TO STRUCTURAL DRAWINGS). THE GENERAL CONTRACTOR SHALL PROVIDE A SET OF SHOP DRAWINGS SIGNED & SEALED BY A REGISTERED STRUCTURAL ENGINEER TO FIT THE BOILER THAT IS PURCHASED AND INSTALLED. MATCH THE WALK AREA AS CLOSE AS POSSIBLE TO ALIGN WITH THE SPECIFIC BOILER INSTALLED.

NO.	DESCRIPTION	DATE
	30% SUBMISSION	02-23-2022
	30% SUBMISSION (RESUBMISSION)	12-30-2022
	60% SUBMISSION	11-24-2023
	100% SUBMISSION	03-27-2024
	100%-2ND SUBMISSION	05-14-2024
	BID DOCUMENTS	05-20-2025

CONSULTANTS:

SEAL

AMBRISH K. RASTOGI REGISTERED 04193 STATE OF WEST VIRGINIA PROFESSIONAL ENGINEER

SIGNATURE:

ARCHITECT/ENGINEERS:

A DESIGN GROUP, LLC
ART - ARCHITECTURE - ENGINEERING
2787 HILL ROAD
VIENNA, VA 22181

FRANK V. STURGEON, AIA

AMBRISH RASTOGI, PE

703.938.5226
FRANK@ADG10.COM

Drawing Title: **COVER SHEET-MECHANICAL**

Approved: Project Director

Project Title: **Replace Boiler #3**

Location: Clarksburg WV Medical Center

Date: 05/20/2025 | Checked: AR | Drawn: AM

Project Number: **540-22-103**

Building Number: NO. 1

Drawing Number: **M001**

Dwg. 10 of 25

Office of Construction and Facilities Management

Department of Veterans Affairs

VA FORM 08-6231

IF THIS SHEET IS NOT 30" X42" FULL SIZE, USE GRAPHIC SCALE.

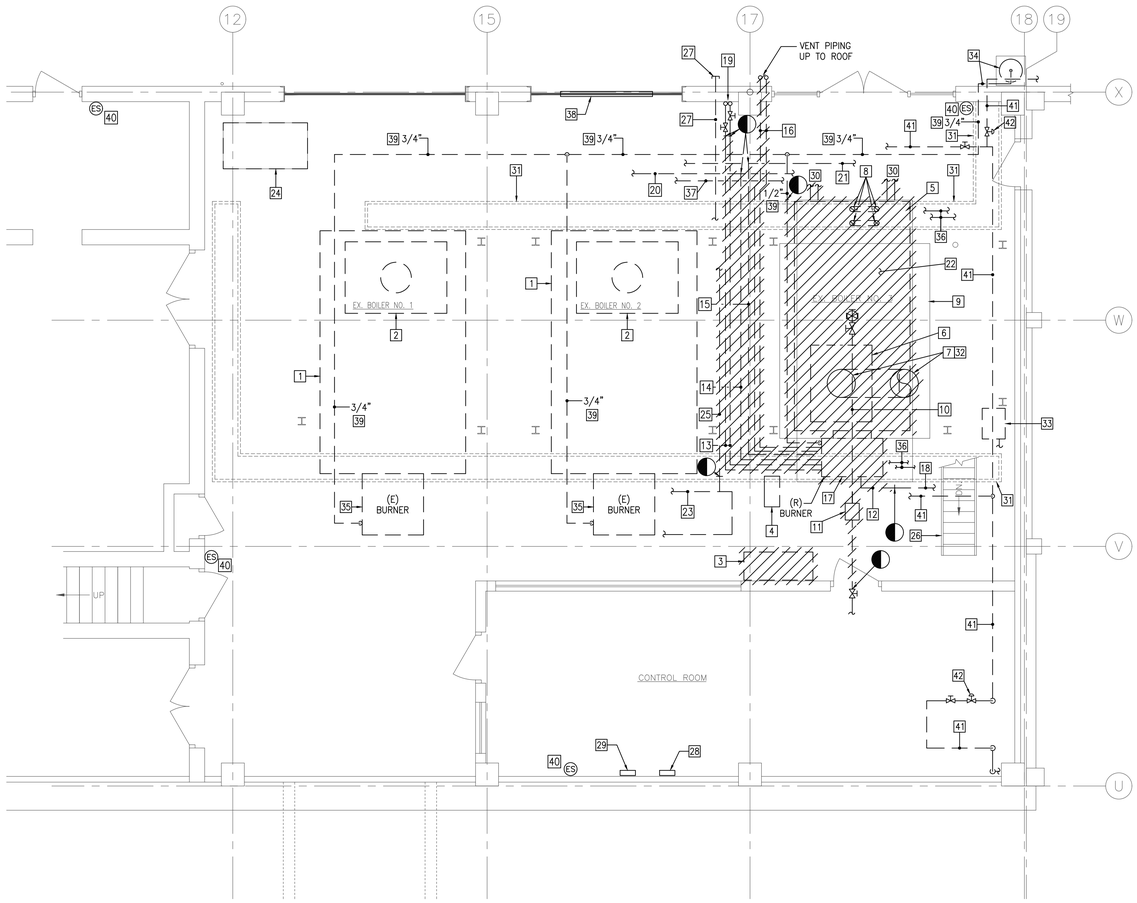

1 BOILER ROOM-DEMOLITION WORK PLAN

1/4" = 1'-0"

KEYED NOTES–DEMOLITION WORK

1. EXISTING BOILER TO REMAIN (TYPICAL).
2. EXISTING BOILER'S ECONOMIZER ASSEMBLY TO REMAIN (TYPICAL).
3. REMOVE EXISTING ABANDONED BOILER CONTROL PANEL. THE CONTRACTOR SHALL COORDINATE WITH VA BUILDING ENGINEER BEFORE REMOVAL (TYPICAL).
4. REMOVE EXISTING BOILER CONTROL PANEL SERVING EXISTING BOILER #3 AND IT'S ASSOCIATED CONTROLS AND ACCESSORIES, ETC. COORDINATE EXISTING MAIN CONTROL PANEL FOR OUTAGE REQUIREMENTS.
5. REMOVE EXISTING BOILER, PIPING, VALVES, ACCESSORIES, CONTROLS, SUPPORTS, ETC.
6. REMOVE EXISTING BOILER'S ECONOMIZER ASSEMBLY, PIPING, VALVE, ACCESSORIES, CONTROLS, SUPPORTS, ETC.
7. REMOVE EXISTING 24" DIAMETER BOILER STACK FROM BOILER TO ROOF, ACCESSORIES, SUPPORTS, ETC. FILL EXISTING UNUSED ROOF OPENING TO MATCH EXISTING. SEAL WATER TIGHTS.
8. REMOVE EXISTING 4" DIAMETER RELIEF VENT FROM BOILER TO ROOF, ACCESSORIES, SUPPORTS, ETC. FILL EXISTING ROOF OPENING TO MATCH EXISTING. SEAL WATER TIGHTS (TYPICAL).
9. REMOVE EXISTING CONCRETE BASE. COORDINATE WITH EXISTING TRENCH.
10. REMOVE EXISTING 6" DIAMETER STEAM SUPPLY PIPING AS SHOWN IN THIS FLOOR PLAN (TYPICAL).
11. REMOVE EXISTING FLOW METER AS SHOWN IN THIS FLOOR PLAN.
12. REMOVE EXISTING COMPRESSED AIR PIPING AS SHOWN IN THIS FLOOR PLAN.
13. REMOVE EXISTING FUEL OIL SUPPLY AND RETURN PIPING AS SHOWN IN THIS FLOOR PLAN (TYPICAL).
14. REMOVE EXISTING PROPANE GAS PIPING AS SHOWN IN THIS FLOOR PLAN.
15. REMOVE EXISTING NATURAL GAS PIPING AS SHOWN IN THIS FLOOR PLAN.
16. VENT PIPING (TYPICAL).
17. REMOVE EXISTING BURNER, CONTROL, PIPING AND ACCESSORIES, ETC.
18. EXISTING COMPRESSED AIR PIPING TO REMAIN.
19. EXISTING FUEL OIL SUPPLY AND RETURN PIPING TO REMAIN.
20. EXISTING PROPANE GAS PIPING TO REMAIN.
21. EXISTING NATURAL GAS PIPING TO REMAIN.
22. PROVIDE NEW CATWALK PLATFORM TO ACCOMMODATE NEW BOILER AND ACCESSORIES INSTALLATION AS REQUIRED. VERIFY IN FIELD. REFER TO STRUCTURAL DRAWINGS FOR INFORMATION.
23. EXISTING FEED WATER SUPPLY PIPING TO REMAIN.
24. EXISTING FUEL OIL PUMP TO REMAIN.
25. REMOVE EXISTING FEED WATER PIPING.
26. EXISTING LADDER.
27. EXISTING STEAM PIPING TO REMAIN, TO SERVE TEMPORARY BOILER.
28. EXISTING EMERGENCY GAS SHUT–OFF SWITCH TO REMAIN.
29. EXISTING FUEL SHUT–OFF PANEL/SWITCH TO REMAIN.
30. REMOVE EXISTING BLOW DOWN & DRAIN PIPING UP TO TRENCH DRAIN. VERIFY IN FIELD (TYPICAL)
31. EXISTING TRENCH DRAIN TO REMAIN (TYPICAL).
32. REMOVE EXISTING BOILER'S FLUE PIPE. REUSE EXISTING ROOF OPENING TO INSTALL NEW BOILER'S FLUE PIPE. REPAIR ROOF OPENING AS REQUIRED.
33. EXISTING COMPRESSOR TO REMAIN.
34. EXISTING PROPANE GAS TANK TO REMAIN.
35. EXISTING BOILER'S BURNER TO REMAIN (TYPICAL).
36. EXISTING PIPING IN THE TRENCH DRAIN TO REMAIN (TYPICAL).
37. EXISTING CHEMICAL FEED PIPING TO REMAIN.
38. EXISTING LOUVER ABOVE DOOR TO REMAIN.
39. EXISTING PROPANE GAS PIPING TO REMAIN (TYPICAL).
40. EXISTING EMERGENCY GAS/FUEL OIL SHUT–OFF VALVE TO REMAIN (TYPICAL).
41. EXISTING NATURAL GAS PIPING TO REMAIN (TYPICAL).
42. EXISTING SHUT–OFF VALVE FOR NATURAL GAS PIPING TO REMAIN (TYPICAL).

GENERAL NOTES–DEMOLITION WORK

1. CONTRACTOR SHALL PROVIDE COORDINATION DRAWINGS BEFORE THE DEMOLITION WORK. PROVIDE ALL SYSTEMS IN COORDINATION WITH THE SITE CONDITIONS AS PART OF THIS CONTRACT. MAINTAIN CONTINUITY OF EXISTING SYSTEMS, ETC. PROVIDE PHASED DEMOLITION WORK PLANS FOR REVIEW.
2. UNDER NO CIRCUMSTANCE SHALL THE WORK PERFORMED UNDER THIS CONTRACT ADVERSELY AFFECT ADJACENT AREAS, NOT PART OF THIS CONTRACT.
3. MAINTAIN EXISTING SYSTEMS AS NECESSARY TO CONTINUE NORMAL OPERATIONS. ALL SERVICE INTERRUPTIONS SHALL BE AT OWNER'S CONVENIENCE. REQUESTS FOR SERVICE INTERRUPTIONS SHALL BE MADE A MINIMUM OF 14 DAYS PRIOR TO ANTICIPATED DATE. THE CONTRACTOR SHALL SUBMIT DESCRIPTION WHICH IDENTIFIES THE DEMOLITION/CONSTRUCTION PHASING REQUIREMENTS TO PREVENT ANY ADVERSE EFFECTS ON NORMAL PLANT SYSTEMS OPERATION. THE CONTRACTOR SHALL SUBMIT FOR APPROVAL A FORMAL PHASING PLANS IN ACCORDANCE WITH THE ENGINEER'S PHASING SEQUENCING IDENTIFIED IN THE DESIGN DOCUMENTS.
4. ALL DEMOLISHED EQUIPMENT AND RUBBISH SHALL BE CLEARED, TRANSPORTED AND DISPOSED OF IN A LAWFUL AND RESPONSIBLE MANNER.

TYPICAL DEMOLITION NOTES

FOR ALL ITEMS SCHEDULED FOR DEMOLITION:
COORDINATE WITH OWNER'S REP. REGARDING WHICH ITEMS ARE TO BE PROTECTED, SALVAGED, AND/OR DISCARDED.

SCHEDULING & SEQUENCING OF THE WORK:
PRIOR TO COMMENCEMENT OF ANY WORK ON THE PROJECT, THE CONTRACTOR SHALL MEET WITH THE OWNER'S REP. & A REPRESENTATIVE OF THE "END USER" TO DISCUSS & FORMULATE A SCHEDULING & SEQUENCING OF THE WORK PLAN IN AN EFFORT TO MINIMIZE THE DISRUPTION OF ONGOING SERVICES & ACTIVITIES WITHIN THE AREAS OF THE WORK. THE CONSTRUCTION PHASING STEPS–MILESTONE ARE INDICATED ON DRAWING MP101 FOR INFORMATION ONLY. BEFORE COMMENCEMENT OF THE WORK THE CONTRACTOR SHALL DEVELOP A WRITTEN PLAN OF SCHEDULING & SEQUENCING INDICATING TARGET DATES FOR CERTAIN PHASES ON THE WORK & ASSOCIATED SELECTIVE DEMOLITION PROVIDE COPIES TO COR & END USER.

ELECTRICAL COMPONENTS:
COORDINATE REMOVAL OF ELECTRICAL SYSTEMS AND COMPONENTS WITH ELECTRICAL DRAWINGS. REMOVE ANY EXISTING WIREMOLD. ALL CABLING TO RUN INSIDE WALLS.

MECHANICAL COMPONENTS:
COORDINATE REMOVAL OF MECHANICAL SYSTEMS AND COMPONENTS WITH MECHANICAL DRAWINGS.

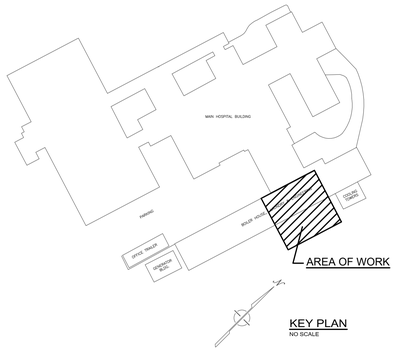

KEY PLAN
NO SCALE

NO.	DESCRIPTION	DATE
	30% SUBMISSION	02-23-2022
	30% SUBMISSION (RESUBMISSION)	12-30-2022
	60% SUBMISSION	11-24-2023
	100% SUBMISSION	03-27-2024
	100%-2ND SUBMISSION	05-14-2024
	BID DOCUMENTS	05-20-2025

CONSULTANTS:

SEAL

AMBRISH K. RASTOGI REGISTERED PROFESSIONAL ENGINEER 043193 STATE OF WEST VIRGINIA

SIGNATURE:

ARCHITECT/ENGINEERS:

A DESIGN GROUP, LLC
ART - ARCHITECTURE - ENGINEERING
2787 HILL ROAD
VIENNA, VA 22181

FRANK V. STURGEON, AIA

AMBRISH RASTOGI, PE

703.938.5226
FRANK@ADG10.COM

Drawing Title
BOILER ROOM FLOOR PLAN-PIPING-DEMOLITION WORK

Approved: Project Director

Project Title
Replace Boiler #3

Location
Clarksburg WV Medical Center

Date 05/20/2025 | Checked AR | Drawn AM

Project Number
540-22-103

Building Number
NO. 1

Drawing Number
MD101
Dwg. 11 of 25

Office of Construction and Facilities Management

Department of Veterans Affairs

VA FORM 08-6231

IF THIS SHEET IS NOT 30" X42" FULL SIZE, USE GRAPHIC SCALE:

one half inch = one foot | one inch = one foot | one and one half inches = one foot | three quarters inch = one foot | three eighths inch = one foot | one quarter inch = one foot | one eighth inch = one foot

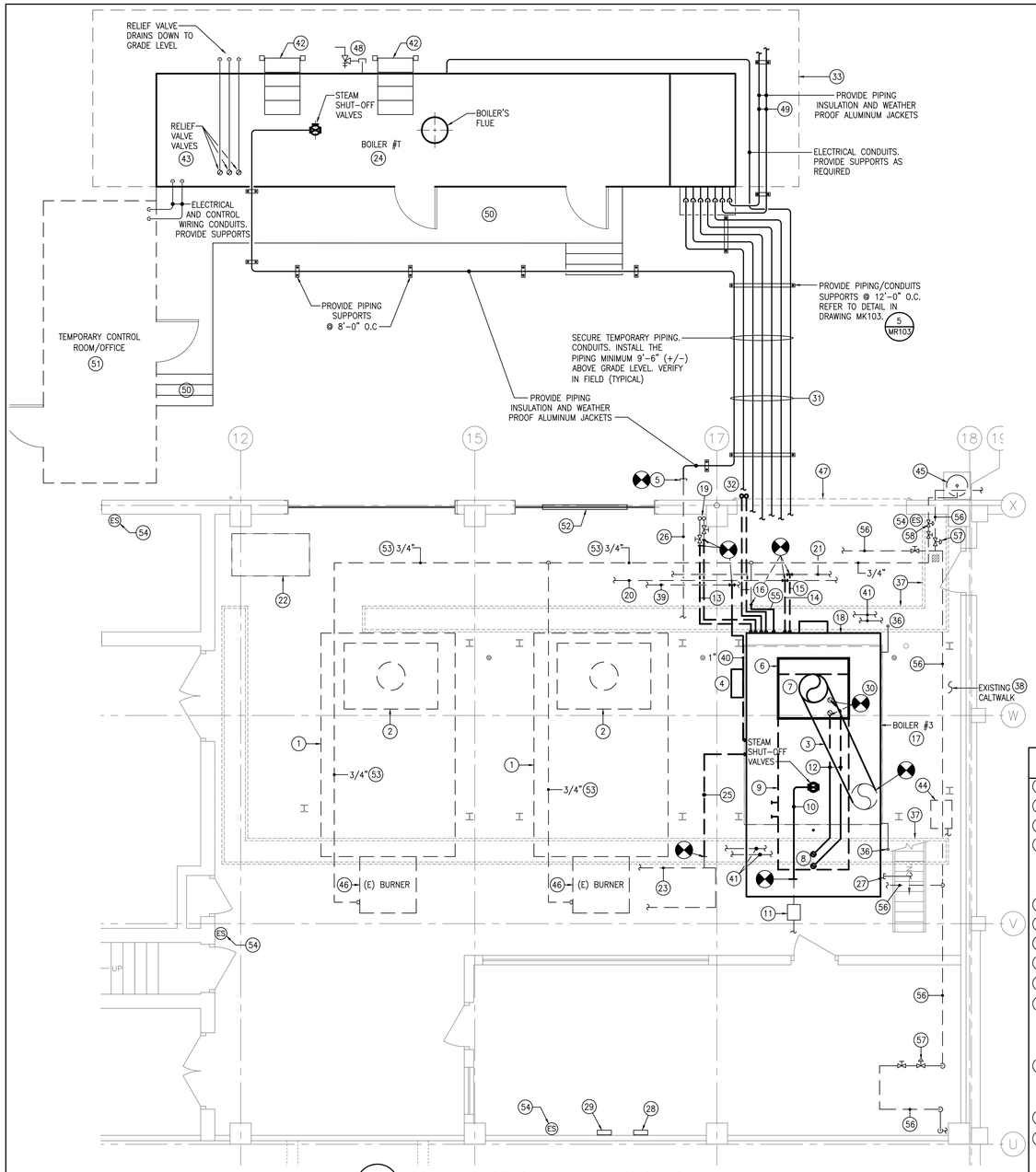

1 BOILER ROOM-NEW WORK PLAN
1/4" = 1'-0"

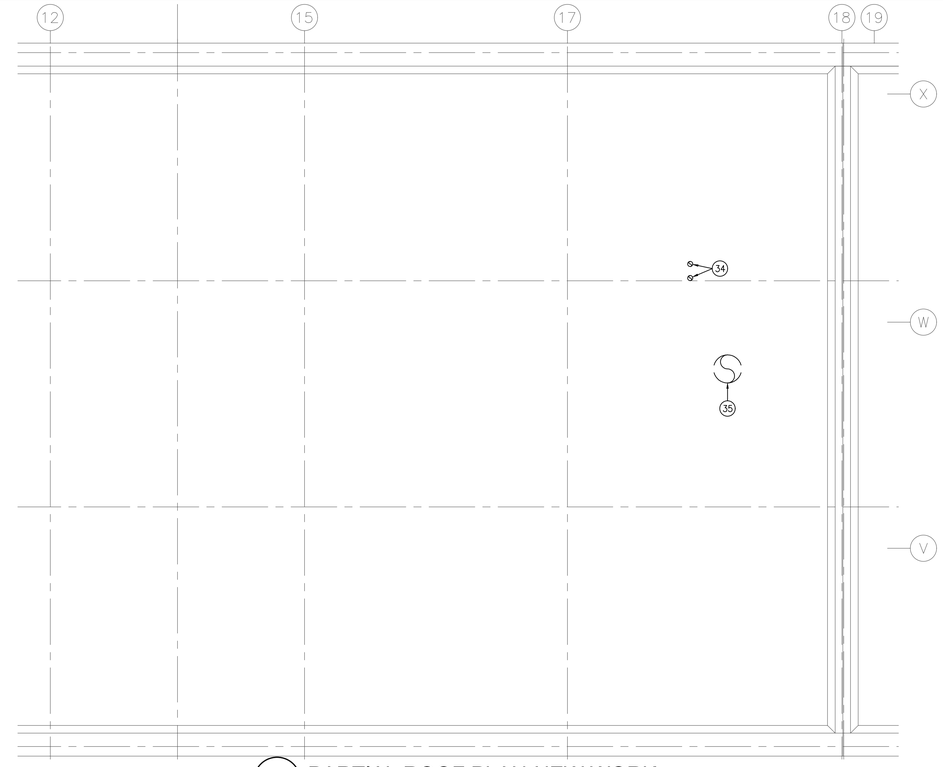

2 PARTIAL ROOF PLAN-NEW WORK
1/4" = 1'-0"

KEYED NOTES–NEW WORK

1. EXISTING BOILER (TYPICAL).
2. EXISTING BOILER'S ECONOMIZER ASSEMBLY (TYPICAL).
3. NEW BOILER FLUE PIPING.
4. NEW BOILER CONTROL PANEL SERVING BOILER #3. INTERLOCK WITH EXISTING MASTER BOILER CONTROL PANEL.
5. CONNECT NEW STEAM PIPING TO EXISTING.
6. NEW BOILER'S ECONOMIZER ASSEMBLY, PIPING, VALVE, ACCESSORIES, CONTROLS. PROVIDE UNIT SUPPORTS.
7. NEW 24" DIAMETER BOILER STACK/FLUE FROM BOILER UP TO ROOF. PROVIDE BOILER STACK SUPPORT AS REQUIRED. INSTALL THE BOILER STACK IN FULL COMPLIANCE WITH MANUFACTURER RECOMMENDATIONS.
8. NEW RELIEF VALVE. THE CONTRACTOR COORDINATE WITH BOILER MANUFACTURER FOR VALVE SIZING, AND NUMBER OF VALVE. INSTALL THE VALVE IN FULL COMPLIANCE WITH MANUFACTURER RECOMMENDATIONS (TYPICAL).
9. NEW CONCRETE BASE. THE CONTRACTOR SHALL COORDINATE NEW BOILER FOOT PRINT. COORDINATE WITH EXISTING TRENCH DRAIN. MODIFY EXISTING TRENCH DRAIN SUPPORT AS REQUIRED. REFER TO STRUCTURAL DRAWINGS FOR INFORMATION. VERIFY IN FIELD.
10. NEW 6" DIAMETER STEAM SUPPLY PIPING (TYPICAL). CONNECT NEW PIPING TO EXISTING.
11. EXISTING FLOW METER.
12. NEW PRESSURE RELIEF VALVE PIPING (TYPICAL).
13. NEW FUEL OIL SUPPLY AND RETURN PIPING. CONNECT NEW PIPING TO EXISTING (TYPICAL).
14. NEW PROPANE GAS PIPING. CONNECT NEW PIPING TO EXISTING.
15. NEW NATURAL GAS PIPING. CONNECT NEW PIPING TO EXISTING.
16. NEW VENT PIPING. CONNECT NEW PIPING TO EXISTING (TYPICAL).
17. NEW BOILER (BOILER #3). PROVIDE UNIT SUPPORTS. INSTALL THE BOILER IN FULL COMPLIANCE WITH MANUFACTURER RECOMMENDATIONS. PROVIDE AN ADEQUATE SERVICE/MAINTENANCE CLEARANCE AROUND THE UNIT. INTERLOCK CONTROL WITH EXISTING SYSTEMS.
18. NEW BURNER (BUILT-IN WITH BOILER ASSEMBLY). INSTALL THE UNIT IN FULL COMPLIANCE WITH MANUFACTURER RECOMMENDATIONS. PROVIDE AN ADEQUATE SERVICE/MAINTENANCE CLEARANCE AROUND THE UNIT. INTERLOCK CONTROL WITH EXISTING SYSTEMS.
19. EXISTING FUEL OIL SUPPLY AND RETURN PIPING.
20. EXISTING PROPANE GAS PIPING.

KEYED NOTES–NEW WORK (CONTINUATION)

21. EXISTING NATURAL GAS PIPING.
22. EXISTING FUEL OIL PUMP ASSEMBLY.
23. EXISTING FEED WATER SUPPLY.
24. TEMPORARY BOILER. THE CONTRACTOR SHALL PERFORM IN THE INTERM TO ENSURE THE SAFE OPERATION OF THE BOILER AND IT'S SAFETY DEVICES ARE FULLY OPERATIONAL AND FUNCTION PROPERLY. THE CONTRACTOR SHALL COORDINATE AND PROVIDE ALL UTILITY CONNECTIONS AS REQUIRED FOR THE TEMPORARY BOILER. REFER TO MP102 DRAWING FOR INFORMATION.
25. NEW FEED WATER SUPPLY PIPING.
26. TEMPORARY STEAM SUPPLY PIPING.
27. CAP EXISTING COMPRESSED AIR PIPING.
28. EXISTING EMERGENCY GAS SHUT-OFF SWITCH.
29. EXISTING FUEL SHUT-OFF PANEL/SWITCH.
30. NEW RELIEF VALVE VENT PIPING UP TO ROOF. PROVIDE SUPPORTS AS REQUIRED. THE CONTRACTOR SHALL COORDINATE WITH BOILER MANUFACTURER FOR RELIEF VALVE SIZING AND INSTALL IN FULL COMPLIANCE WITH MANUFACTURER RECOMMENDATIONS. ALL SAFETY VALVE SETTING MUST BE LIFTED TO PASS THE SAFETY DEVICE TESTING REQUIREMENTS (TYPICAL).
31. PROVIDE 6" STEAM SUPPLY, 2" FEED WATER TANK CONDENSATE RETURN, 2" CITY WATER, 2" SOFTENER REGEN, 1" FUEL OIL SUPPLY AND RETURN, 3" NATURAL GAS, 2" REMOTE FEED WATER, 2-1/2" ELECTRICAL CONDUITS FOR TEMPORARY BOILER. PROVIDE PIPING SUPPORT ASSEMBLY AS REQUIRED. MAINTAIN PROPER PIPING SLOPE (TYPICAL).
32. NEW VENT PIPING UP TO ROOF. PROVIDE PIPING SUPPORTS (TYPICAL).
33. PROVIDE TEMPORARY PROTECTION SAFETY BARRIER/FENCE. PROVIDE LIGHTING AROUND THE BOILER. REFER TO ELECTRICAL DRAWING FOR INFORMATION. THE CONTRACTOR SHALL REMOVE SNOW AROUND THE BOILER IF THE WORK IS DONE DURING WINTER DURATION (TYPICAL).
34. PROVIDE NEW RELIEF VALVE VENT. INSTALL EXHAUST HEAD AT VENT EXIT POINT OF VENT. INSTALL THE VENT PIPING AND EXHAUST HEAD IN FULL COMPLIANCE WITH BOILER MANUFACTURER RECOMMENDATIONS. COORDINATE EXISTING ROOF OPENING, MODIFY THE ROOF OPENING AS REQUIRED TO ACCOMMODATE NEW VENT PIPING. FILL UNUSED OPENING AND SEAL WATER, AND MAINTAIN BUILDING INTEGRITY (TYPICAL).
35. PROVIDE BOILER STACK. PROVIDE SUPPORTS. INSTALL RAIN CAP WITH BIRD SCREEN AT EXIT OF POINT STACK. INSTALL THE BOILER STACK IN FULL COMPLIANCE WITH MANUFACTURER RECOMMENDATIONS. COORDINATE EXISTING ROOF OPENING, MODIFY THE ROOF OPENING AS REQUIRED TO ACCOMMODATE BOILER STACK PIPING. FILL UNUSED OPENING AND SEAL WATER, AND MAINTAIN BUILDING INTEGRITY (TYPICAL).
36. INSTALL DRAIN BLOW DOWN AND DRAIN PIPING UP TO TRENCH DRAIN (TYPICAL).
37. EXISTING TRENCH DRAIN (TYPICAL).
38. MODIFY EXISTING CATWALK/PLATFORM TO ACCOMMODATE NEW BOILER, ECONOMIZER, RELIEF VALVES, FITTING, ACCESSORIES, ETC. (TYPICAL), (VERIFY IN FIELD).
39. EXISTING CHEMICAL FEED PIPING.
40. NEW CHEMICAL FEED PIPING TO BOILER.
41. COORDINATE EXISTING PIPING IN THE TRENCH, VERIFY IN FIELD (TYPICAL).
42. PROVIDE ACCESS LADDER/CAT-WALK ASSEMBLY FOR TO ACCESS STEAM VALVE, RELIEF VALVE AND ACCESSORIES FOR TEMPORARY BOILER. COORDINATE WITH TEMPORARY BOILER ACCESS DOOR LOCATIONS.
43. SAFETY RELIEF VALVES (1-1/4"ø, 1-1/2"ø & 3"ø) FOR TEMPORARY BOILER. PROVIDE DRAIN PIPING. INSTALL IN FULL COMPLIANCE WITH BOILER MANUFACTURER'S RECOMMENDATIONS (TYPICAL).
44. EXISTING COMPRESSOR.
45. EXISTING PROPANE GAS TANK AND PIPING.
46. EXISTING BOILER BURNER (TYPICAL).
47. REFER TO ARCHITECTURAL DRAWING FOR NEW ROLL-UP DOOR.
48. SAFETY RELIEF VALVE. INSTALL IN FULL COMPLIANCE WITH MANUFACTURER'S RECOMMENDATIONS. THE RELIEF VALVE SHALL NORMALLY COME SET AT THE MAXIMUM ALLOWABLE WORKING STEAM PRESSURE SETTING.
49. PROVIDE 4" BOILER BLOWN DOWN AND 2" DRAIN PIPING. PROVIDE NEUTRALIZER ASSEMBLY. THE CONTRACTOR SHALL COORDINATE WITH VA MEDICAL CENTER FOR DRAIN DISCHARGE LOCATION AT OUTDOOR.
50. PROVIDE STAIR WAYS. REFER TO ARCHITECTURAL DRAWING FOR INFORMATION.
51. THE CONTRACTOR SHALL COORDINATE AND PROVIDE ALL UTILITY CONNECTIONS FOR TEMPORARY CONTROL ROOM/OFFICE AS REQUIRED.
52. EXISTING LOUVER ABOVE DOOR.
53. EXISTING PROPANE GAS PIPING (TYPICAL).
54. EXISTING EMERGENCY GAS/FUEL OIL SHUT-OFF SWITCH (EMERGENCY STOP/PANIC BUTTON). THE CONTRACTOR SHALL INTERLOCK NEW PROPANE GAS SHUT-OFF VALVES. REFURBISH EXISTING VALVES (GAS & FUEL OIL SHUT-OFF VALVE) AND IT'S ALARM TO BE FULLY OPERATIONAL. THE "EMERGENCY STOP/PANIC BUTTONS" SHALL CLOSE THE NATURAL GAS AND PROPANE GAS SHUT-OFF VALVES IN THE PLANT AND DE-ENERGIZE ALL FUEL OIL PUMPS WITHIN 3 SECONDS OF ACTIVATION. ALL "EMERGENCY STOP/PANIC BUTTONS" SHALL BE TESTED ANNUALLY (TYPICAL).
55. NEW PROPANE GAS PIPING. COORDINATE WITH BURNER MANUFACTURE FOR PROPER PIPING INLET SIZES (TYPICAL).
56. EXISTING NATURAL GAS PIPING (TYPICAL).
57. EXISTING SHUT-OFF VALVE FOR NATURAL GAS PIPING (SERVING BOILER #1, BOILER #2 & BOILER #3). PROVIDE HIGH GAS PRESSURE ALARM AND SWITCH. THE SWITCH SHALL ACTIVATE AN AUDIBLE ALARM AND PROPERLY ANNUNCIATE AT A SET POINT OF 120% OF REGULATED MAIN GAS PRESSURE SERVING ALL BOILERS. A LOCKABLE ONLY ISOLATION VALVE AND TEST PORT SHALL BE INSTALLED TO FACILITATE TESTING. THE HIGH GAS PRESSURE ALARM SHALL BE ON MAIN GAS LINE AND ASSOCIATED ANNUNCIATOR PANELS (TYPICAL).
58. THE CONTRACTOR SHALL PROVIDE NEW PROPANE GAS PIPING SHUT-OFF VALVE, MAXON ISOLATION VALVE, SWITCH, AND HIGH PRESSURE ALARM ON MAIN PROPANE GAS PIPING (SERVING BOILER #1, BOILER #2 & BOILER #3), AND THEY SHALL BE INTERLOCKED WITH EXISTING EMERGENCY SHUT-OFF SWITCH (SERVING GAS/FUEL OIL SHUT-OFF VALVE) AND BOILER'S MAIN CONTROL PANEL AND ASSOCIATED ANNUNCIATOR PANEL. THE SWITCH SHALL ACTIVATE AN AUDIBLE ALARM AND PROPERLY ANNUNCIATE AT A SET POINT OF 120% OF REGULATED MAIN GAS PRESSURE SERVING ALL BOILERS. A LOCKABLE ONLY ISOLATION VALVE AND TEST PORT SHALL BE INSTALLED TO FACILITATE TESTING.

GENERAL NOTES–NEW WORK

1. PROVIDE COORDINATION DRAWINGS BEFORE THE DEMOLITION WORK. PROVIDE ALL SYSTEMS IN COORDINATION WITH THE SITE CONDITIONS AS PART OF THIS CONTRACT. MAINTAIN CONTINUITY OF HVAC AND ELECTRICAL SYSTEMS ETC. WHICH IS NOT PART OF SCOPE OF WORK.
2. ALL EXISTING, NEW WALL PENETRATIONS WILL BE COMPLETELY SEALED WITH APPROVED U/L LISTED FIRE STOPPING MATERIALS. CONTRACTOR SHALL PROVIDE FIRE STOPPING SUBMITTALS FOR APPROVAL.
3. ALL DEMOLISHED EQUIPMENT AND RUBBISH SHALL BE CLEARED, TRANSPORTED AND DISPOSED OF IN A LAWFUL AND RESPONSIBLE MANNER DAILY. THE PREMISES–INTERIOR AND EXTERIOR SHALL BE MAINTAINED IN A REASONABLY CLEAN AND ORDERED STATE FOLLOWING EACH DAY'S CONSTRUCTION PROCESS. UNDER NO CIRCUMSTANCES SHALL CONSTRUCTION DEBRIS BE LEFT EXPOSED TO ACCESS BY THE PUBLIC.
4. ALL OPENINGS IN WALLS REMAINING AFTER THE REMOVAL OF EXISTING PIPING, EQUIPMENT ETC. SHALL BE SEALED AND PATCHED TO MATCH EXISTING CONSTRUCTION CONDITIONS.
5. ANY HOLES/VOIDS CREATED MUST BE FILLED/COVERED BY SAME DAY (CLOSE OF BUSINESS) TO ENSURE FACILITY SECURITY. MAINTAIN BUILDING INTEGRITY.
6. CAP OR PLUG ALL ACTIVE REMAINING SYSTEMS WHERE RECONNECTIONS ARE NOT PLANNED AT POINTS WHERE EXISTING SYSTEM IS RETAINED.
7. DURING THE CONSTRUCTION PHASE, IT IS VERY IMPORTANT TO MAINTAIN UNINTERRUPTED SERVICE TO OTHER AREA. CONTRACTOR SHALL ENSURE THAT THE OTHER PHASES ARE NOT AFFECTED AND PROVIDE TEMPORARY PIPING, CONDUITS, ETC. AS NECESSARY TO MAINTAIN CONTINUITY.
8. BOILER STACK, VENTS SHALL COMPLY WITH NFPA 54 AND NFPA 210.
9. BURNERS AND GAS PIPING, ETC SHALL BE VENTED ACCORDING TO THE CRITERIA IN NFPA 85A, PREVENTION OF FURNACE EXPLOSIONS IN SINGLE BURNER, BOILER–FURNACES AND NFPA 85A.
10. INTERLOCK NEW BOILER/CONTROL'S PANEL WITH EXISTING PLANT JCI–JOHNSON CONTROL SYSTEMS. THE NEW CONTROLS SHALL BE COMPATIBLE WITH EXISTING BOILER PLANT JCI–JOHNSON CONTROL MASTER CONTROL SYSTEMS. THE CONTRACTOR SHALL HIRE A CONTROL SYSTEM INTEGRATOR TO PREPARE CONTROL INTEGRATION DRAWING BETWEEN NEW CONTROL SYSTEM WITH EXISTING. COORDINATE ALL NEW CONTROL POINTS WITH EXISTING CONTROL MAIN PANEL FOR PROPER OPERATION.
11. ALL INTERLOCKING DEVICES SHALL BE TESTED WITHOUT REMOVAL FROM THE SYSTEM AS PER SPECIFICATION 23 09 11. THIS SHALL BE ACCOMPLISHED BY FOUR WAY VALVES DOWN STREAM OF THE INTERLOCK DEVICE. THE CURRENT PROOF OF CLOSURE ISOLATION SHALL PERFORMED BY AN ELECTRONIC POC BYPASS DEVICE.
12. THE BOILER SAFETY VALVE'S PRESSURE SET SHALL BE IN ACCORDANCE WITH VHA BOILER PLANT SAFETY DEVICE TESTING MANUAL. THE CONTRACTOR SHALL COORDINATE WITH BOILER'S MANUFACTURER PRESSURE SETTING.
13. ALL FITTINGS AND VALVES SHALL BE CAST (OR) FORGED STEEL NO CASE IRON FITTINGS (OR) HOUSING ALLOWED.
14. THE BOILER SAFETY VALVES DEVICES SHALL BE IN ACCORDANCE WITH VHA BOILER PLANT SAFETY DEVICE TESTING MANUAL.
15. INTERLOCK NEW BOILER WITH EXISTING COMBUSTION/AIR INTAKE LOUVER CONTROLS AND THE VENTILATION SYSTEM.
16. CONTRACTOR SHALL COORDINATE AT THE SITE FOR THE DISCHARGE LOCATION OF RELIEF VALVE VENT/DISCHARGES, DRAIN PIPING FOR TEMPORARY BOILER WHICH DO NOT CREATE HAZARD. COORDINATE WITH VA MEDICAL CENTER. VERIFY IN FIELD.

NOTES

1. THESE DRAWINGS ARE FOR THE BASIS OF DESIGN FOR THE SPECIFIC BOILER SHOWN. IF THE GENERAL CONTRACTOR CHOOSES ANOTHER BOILER MANUFACTURER, THE GENERAL CONTRACTOR SHALL PROVIDE DETAILED SHOP DRAWINGS OF THE PLATFORM, STAIRS, RAILINGS AND MECHANICAL EQUIPMENT, PIPING, FLUE VENT, ACCESSORIES AND ECONOMIZER, UTILITY AND ELECTRICAL REQUIREMENTS, ETC., TO MEET THE REQUIREMENTS AND CONFIGURATION OF THE SPECIFIC BOILER. THESE SHOP DRAWINGS SHALL BE SIGNED BY A REGISTERED PROFESSIONAL ENGINEER."

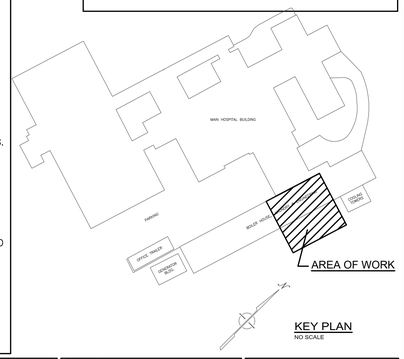

KEY PLAN
NO SCALE

NO.	DESCRIPTION	DATE
	30% SUBMISSION	02-23-2022
	30% SUBMISSION (RESUBMISSION)	12-30-2022
	60% SUBMISSION	11-24-2023
	100% SUBMISSION	03-27-2024
	100%-2ND SUBMISSION	05-14-2024
	BID DOCUMENTS	05-20-2025

CONSULTANTS:

SEAL

AMBRISH K. RASTOGI REGISTERED 03193 STATE OF WEST VIRGINIA PROFESSIONAL ENGINEER

SIGNATURE:

ARCHITECT/ENGINEERS:

A DESIGN GROUP, LLC
ART - ARCHITECTURE - ENGINEERING
2787 HILL ROAD
VIENNA, VA 22181

FRANK V. STURGEON, AIA

AMBRISH RASTOGI, PE

703.938.5226
FRANK@ADG10.COM

Drawing Title
BOILER ROOM & ROOF PLAN-PIPING-NEW WORK

Approved: Project Director

Project Title
Replace Boiler #3

Location
Clarksburg WV Medical Center

Date 05/20/2025 | Checked AR | Drawn

Project Number
540-22-103

Building Number
NO. 1

Drawing Number
MP101
Dwg. 12 of 25

Office of Construction and Facilities Management

Department of Veterans Affairs

VA FORM 08-6231

IF THIS SHEET IS NOT 30" X42" FULL SIZE, USE GRAPHIC SCALE:

one and one half inches = one foot | one inch = one foot | three quarters inch = one foot | one half inch = one foot | three eighths inch = one foot | one quarter inch = one foot | one eighth inch = one foot

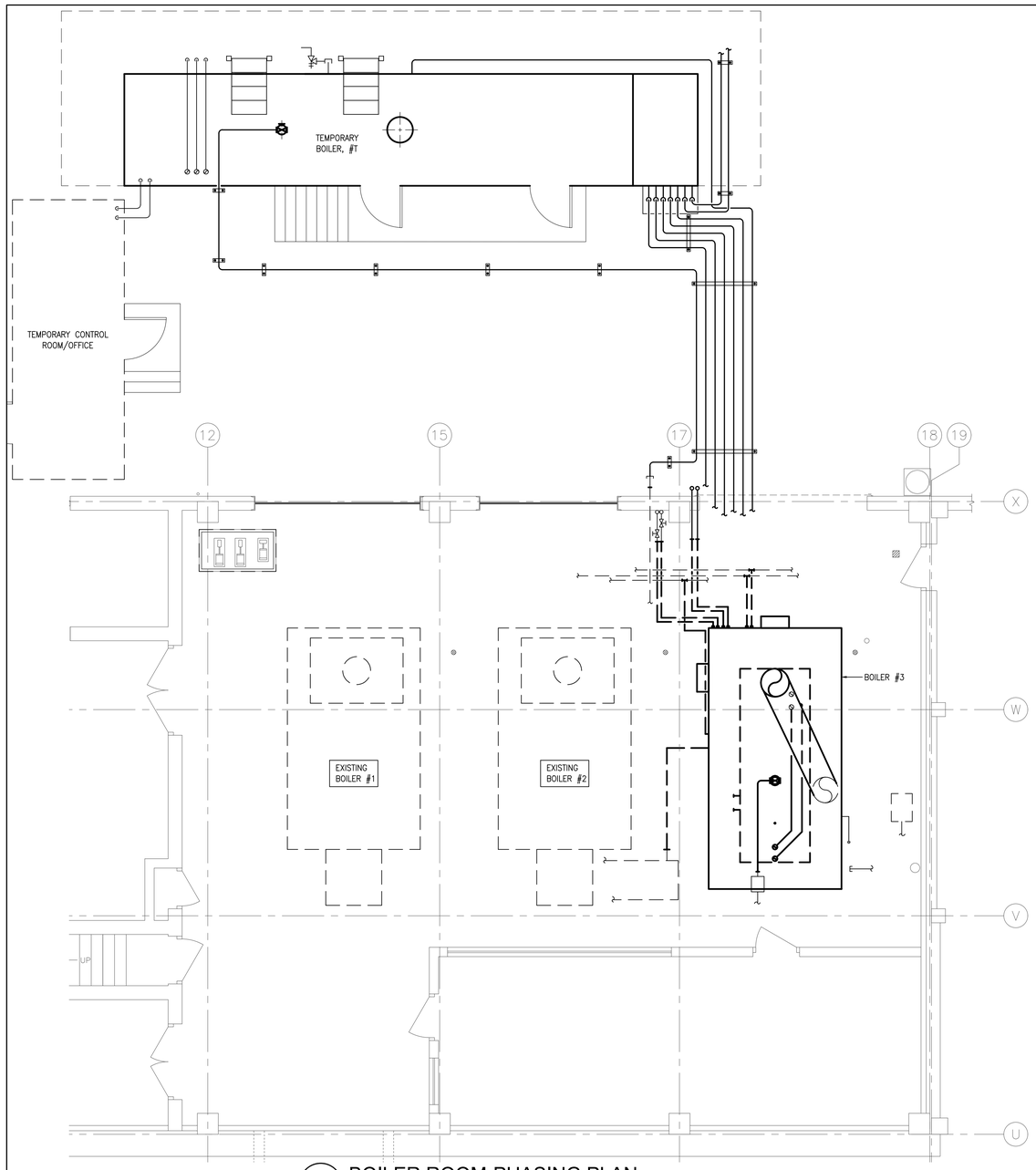

1 BOILER ROOM-PHASING PLAN
1/4" = 1'-0"

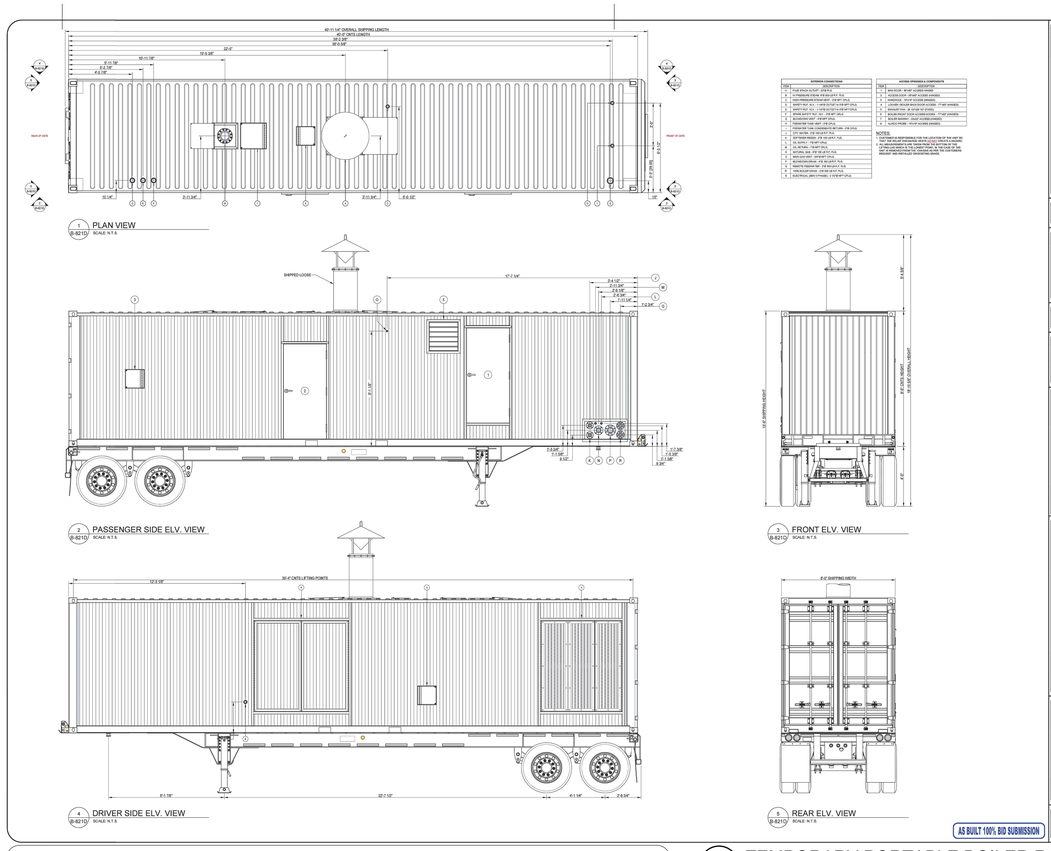

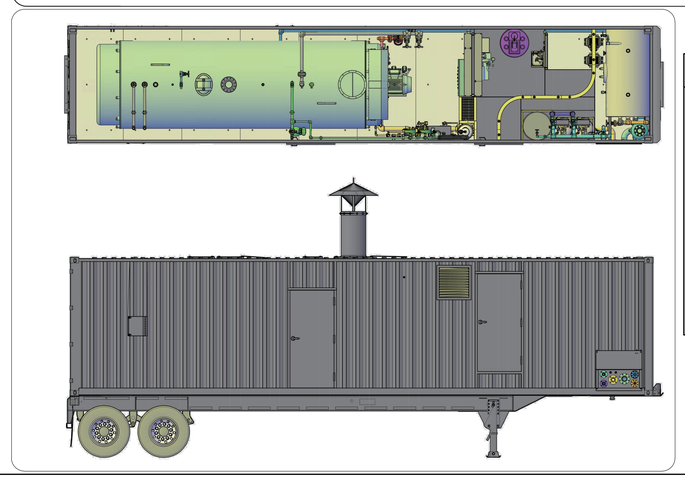

2 TEMPORARY PORTABLE BOILER ROOM
NO SCALE

NOTES

1. THE GENERAL CONTRACTOR SHALL PROVIDE A SERVICE INTERRUPTION NOTICE REQUEST TO COR AT LEAST 14 DAYS IN ADVANCE FOR ANY UTILITY OUTAGES. THE GENERAL CONTRACTOR SHALL PROVIDE UTILITY OUTAGE SCHEDULE AND SHALL ADDRESS ALL CRITICAL POINTS WHERE OUTAGES ARE REQUIRED TO PERFORM THE TASK, TO COR FOR APPROVAL.
2. THE CONTRACTOR SHALL PERFORM IN THE INTERIM TO ENSURE THE SAFE OPERATION OF BOILERS AND THE SAFETY DEVICES ARE FULLY OPERATIONAL AND FUNCTION PROPERLY. THE CONTRACTOR SHALL COMMISSION THE TEMPORARY BOILER AND HAVE A NATIONAL BOARD CERTIFIED INTERNAL AND EXTERNAL INSPECTION AT THE SITE PRIOR TO BEING OFFICIALLY OPERATIONAL, SHALL PROVIDE DOCUMENTS TO VA MEDICAL CENTER.
3. TEMPORARY BOILER SHALL BE MAINTAINED BY THE GC, AND SHALL BE PERFORMING THE TESTING REQUIREMENTS PER THE VA SDTM. THE VA MEDICAL CENTER BOILER PLANT OPERATOR SHALL OVERSEAS THE OPERATION OF THE BOILERS. VA–STAFF SHALL BE TRAINED TO OPERATE THE TEMPORARY BOILER.
4. THE PHASING NOTES LISTED ABOVE IN THIS DRAWING ARE INFORMATION ONLY AND THESE ARE MILESTONES OF THE CONSTRUCTION PROCESS. THE CONTRACTOR SHALL PROVIDE PHASING PLANS INDICATING EACH STEPS FOR COR REVIEW, SHALL COMPLETE AND PROVIDE A FULLY TO OPERATIONAL SYSTEM.
5. THE CONTRACTOR SHALL BE RESPONSIBLE TO PROVIDE ALL REQUIRED ITEMS SUCH AS SAFETY DEVICES, CONTROLS, SENSORS, FITTINGS, AND ACCESSORIES, ETC. WHICH ARE NOT PROVIDED BY THE TEMPORARY BOILER'S MANUFACTURING COMPANY. PROVIDE COMPARISON LIST OF ALL ITEMS BETWEEN TEMPORARY BOILER AND PERMANENT BOILER FOR VA COR REVIEW. PROVIDE A FULLY FUNCTIONAL TEMPORARY BOILER SYSTEMS IN COMPLIANCE WITH ALL VA MEDICAL CENTER & INDUSTRY SAFETY MEASURES.

PHASING NOTES

1. INSTALL NEW TEMPORARY BOILER (BOILER #T) & CONTROL ROOM/OFFICE. PROVIDE TEMPORARY PROTECTION/SAFETY BARRIER. REFER TO MP101 DRAWING.
2. PROVIDE STEAM SUPPLY, FEED WATER, NATURAL GAS, PROPANE GAS, COMPRESSED AIR, DRAIN, CONDENSATE RETURN PIPING AND FUEL OIL SUPPLY & RETURN PIPING, ETC. INSTALL THESE PIPING THRU EXISTING STORE FRONT/WALL. REPAIR EXISTING STORE FRONT/WALL TO ACCOMMODATE THESE PIPING. REFER TO MP101 DRAWING.
3. PROVIDE CONTROLS, DEVICES, FITTINGS, ACCESSORIES, ETC. FOR NEW TEMPORARY BOILER AS DESCRIBED IN M1101 & M1102 DRAWINGS.
4. CONNECT STEAM SUPPLY FROM TEMPORARY BOILER TO EXISTING TEMPORARY STEAM SUPPLY PIPING SERVING STEAM PLANT IN THE BOILER ROOM.
5. ENERGIZE THE TEMPORARY BOILER. PROVIDE CONTROL'S OPERATION/SEQUENCE, ALARMS, TRIPS SEQUENCE, CONTROL/LOGIC SEQUENCE FOR NEW TEMPORARY BOILER AS DESCRIBED IN M1101 & M1102 DRAWINGS.
6. REMOVE EXISTING BOILER #3.
7. REMOVE EXISTING STEAM SUPPLY, FEED WATER, NATURAL GAS, PROPANE GAS, COMPRESSED AIR, DRAIN, CONDENSATE RETURN PIPING SERVING BOILER #3 AS SHOWN IN THE DEMOLITION WORK.
8. PROVIDE NEW BOILER #3
9. PROVIDE STEAM SUPPLY, FEED WATER, NATURAL GAS, PROPANE GAS, COMPRESSED AIR, DRAIN, CONDENSATE RETURN PIPING AND FUEL OIL SUPPLY & RETURN PIPING. SERVING BOILER #3.
10. PROVIDE CONTROLS, DEVICES, FITTINGS, ACCESSORIES, ETC. FOR NEW BOILER #3 BOILER AS DESCRIBED IN M1101 & M1102 DRAWINGS.
11. INSTALL ECONOMIZER, PIPING, ACCESSORIES AND CONTROLS.
12. PROVIDE BOILER STACK FROM BOILER UP TO ROOF.
13. INSTALL THE RELIEF VALVE, PIPING AND ACCESSORIES.
14. PROVIDE BOILER CONTROLS AS PER THE DESIGN DOCUMENTS FOR INFORMATION.
15. ENERGIZE THE BOILER #3. PROVIDE CONTROL'S OPERATION/SEQUENCE, ALARMS, TRIPS SEQUENCE, CONTROL/LOGIC SEQUENCE FOR NEW BOILER #3 AS DESCRIBED IN M1101 & M1102 DRAWINGS.
16. PROVIDE TESTING FOR BOILER #3, CONTROLS AND ALL SAFETY DEVICES.
17. COMPLETE TESTING AND COMMISSIONING OF THE SYSTEMS.
18. TEMPORARY BOILER SHALL REMAIN IN SERVICE UNTIL NEW BOILER IS TESTED AND COMMISSIONED.
19. REMOVE THE TEMPORARY BOILER.
20. REMOVE EXISTING STORE FRONT/DOOR. REFER TO ARCHITECTURAL DRAWINGS FOR INFORMATION.
21. PROVIDE NEW ROLL UP DOOR. REFER TO ARCHITECTURAL DRAWINGS FOR INFORMATION.

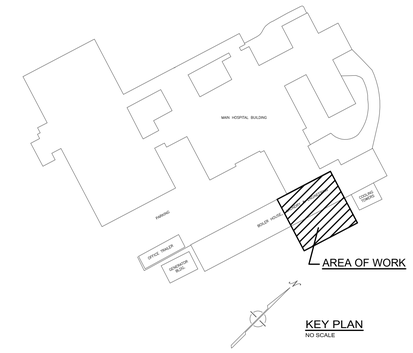

KEY PLAN
NO SCALE

NO.	DESCRIPTION	DATE
	30% SUBMISSION	02-23-2022
	30% SUBMISSION (RESUBMISSION)	12-30-2022
	60% SUBMISSION	11-24-2023
	100% SUBMISSION	03-27-2024
	100%-2ND SUBMISSION	05-14-2024
	BID DOCUMENTS	05-20-2025

VA FORM 08-6231

CONSULTANTS:

SEAL

AMBRISH K. RASTOGI, P.E. — REGISTERED — 043193 — STATE OF WEST VIRGINIA — PROFESSIONAL ENGINEER

SIGNATURE:

ARCHITECT/ENGINEERS:

A DESIGN GROUP, LLC
ART - ARCHITECTURE - ENGINEERING
2787 HILL ROAD
VIENNA, VA 22181

FRANK V. STURGEON, AIA

AMBRISH RASTOGI, PE

703.938.5226
FRANK@ADG10.COM

Drawing Title: **PHASING PLAN**

Approved: Project Director

Project Title: **Replace Boiler #3**

Location: Clarksburg WV Medical Center

Date: 05/20/2025 | Checked: AR | Drawn: AM

Project Number: **540-22-103**

Building Number: NO. 1

Drawing Number: **MP102**

Dwg. 13 of 25

Office of Construction and Facilities Management

Department of Veterans Affairs

REDWAVE SYSTEMS — A DELVAL EQUIPMENT COMPANY

DELVAL EQUIPMENT
Phone (610) 279-9100 | Fax 610-279-9110
Visit us@delval.com | www.delval.com

MGM ENGINEERING & DESIGN CONSULTANTS, LLC
PROFESSIONAL ENGINEERS
Email: MGM@MGMEDC.COM

Free Standing Or Permanent Or MCM Manufactured Pressure Vessel Boiler Or Equivalent Fuel Fired Heating Hot Water Or Steam Boiler Installation Shall Meet Connection And Placement Requirements Of Manufacturer Specified Fuel Line Controls
Boiler Manufacturer Has Sole Discretion In Regard To Provide Minimum Spacing.
Boiler Manufacturer Or Authorized Distributor Has Sole Discretion Minimum Or Recommend Fuel Line Controls
Equipment Shall Be Installed Per Manufacturer Instructions And Applicable Codes.
Contractor Responsible For Safe Operation Of Equipment Prior To Being Officially Operational.
Contractor Shall Provide Documentation Of Equipment Inspection Prior To Being Officially Operational.

REVISIONS	DATE	BY
1	11-24-23	AR
2	03-27-24	AR
3	05-14-24	AR
4	05-20-25	AR

DRAWING NO. MP101 & MP102 — DRAWING NO. M1101 & M1102

350 HP PORTABLE BOILER ROOM
EXTERIOR CONN. DIMENSIONAL DRAWING
VALLEY FORGE BUSINESS CENTER
Delval EQUIPMENT CORPORATION
NORRISTOWN — MONTGOMERY COUNTY — PENNSYLVANIA

BOILER DATA:
MODEL NO. DVSF-350-150-PSIG-HW
SERIAL NO. 21-0-1-1
NATIONAL BOARD NO. 21-0-1-1 — 2021 MFG. NO. 21-0-1-1
BOILER SPECIFICATIONS
DRY WEIGHT: 32,000 LBS — OPR. WEIGHT: 35,000 LBS
MAXIMUM WORKING PRESSURE: 150 PSIG
DESIGN: 1371 FT/HR — @ 80 PSIG
RATING: FUEL GAL 2 OIL 1500 GPH (NET) GALL
PRESSURE PER GAL: 0.0 PSI — 0.0 PSI — 0.0 PSI
FUEL: NATURAL GAS OR PROPANE
FUEL PRESSURE: 0.0 PSI — 0.0 PSI — 0.0 PSI
FUEL: FUEL PRESSURE: 0.0 PSI
CONNECTIONS: FEED WATER INLET 2 — 150# FLANGE
SUPPLY/RETURN: 2 — 150# FLANGE
ELECTRICAL: 480 VOLTS — 3 PHASE — 60 HZ — 100 AMPS
BLOW DOWN: 2 — 150# FLANGE — BLOW DOWN: 2 — 150# FLANGE
LOW WATER CUT OFF: 2 — 150# FLANGE
CODE COMPLIANCE: TO BE TBD (SEPT.) 2021
DRAWING NO. MP101 & MP102 — DRAWING NO. M1101 & M1102

AS BUILT 100% BID SUBMISSION

B-821D

B-Report 8-821D B-821D 1-1-1 Page 1 of 1

IF THIS SHEET IS NOT 30" X42" FULL SIZE, USE GRAPHIC SCALE:

BOILER SCHEDULE

UNIT NO.	SERVICE	LOCATION	RATINGS				FUEL CONSUMPTION			POWER REQUIREMENTS		VENT STACK DIA.	OPERATING WEIGHT LBS	ELECTRICAL	REMARKS
			BOILER HP	CAPACITY LBS/HR.	OUTPUT MBH	OPERATING PRESSURE	OIL TYPE	GPH	CFH	BLOWER HP	OIL PUMP HP				
BOILER NO. # 3	STEAM	BOILER PLANT	350	12,371	12,000	105	NO. 2	104	14650	20	3/4	22"	44,000	208V/3ø/60Hz	REFER TO SPECIFICATION FOR ACCESSORIES, FITTINGS, ETC.
BOILER NO. # T	STEAM	BOILER PLANT	350	12,371	12,000	105	NO. 2	104	14650	20	3/4	22"	44,000	208V/3ø/60Hz	THE BOILER SHALL BE OUTDOOR INSTALLATION RATED. REFER TO SPECIFICATION FOR ACCESSORIES, FITTINGS, ETC.

NOTE:
1. PROVIDE SAFETY RELIEF VALVES AS PER THE MANUFACTURER'S RECOMMENDATIONS.

BASIS OF DESIGN:
CLEAVER BROOKS MANUFACTURING COMPANY
MODEL # CBLE-4W-200-350-200ST (OR)
APPROVED EQUAL

PROVIDE BURNER:
BASIS OF DESIGN:
POWER FLAME INCORPORATED, TYPE CMAX, MODEL #CM9A-G(O)-30, 5 HP BLOWER MOTOR, GAS & OIL BURNER, #2 OIL MAX-122 GPH, NATURAL GAS MAX-21300 MBH (OR) APPROVED EQUAL.
PROVIDE PRESSURE REGULATORS, PILOT AND MAIN GAS COCKS, ADJUSTABLE GAS FIRING HEAD, NOZZLE ASSEMBLY WITH OIL AND ATOMIZING AIR TRAINS, AUTOMATIC BURNER CONTROLS, GAS ELECTRIC PILOT AND IGNITION TRANSFORMER.

SAFETY RELIEF VALVE SCHEDULE

VALVE NO.	SERVICE	INLET	OUTLET	EXHAUST	SETTING (PSI)	REMARKS
PSV-301	BOILER NO. 3	2"ø	3"ø	7,700 PPH	120	PROVIDE DRIP PAN ELBOW & EXHAUST HEAD
PSV-302	BOILER NO. 3	2"ø	3"ø	8,000 PPH	125	PROVIDE DRIP PAN ELBOW & EXHAUST HEAD
PSV-303	BOILER NO. 3	2 1/2"ø	3"ø	8,300 PPH	130	PROVIDE DRIP PAN ELBOW & EXHAUST HEAD
PSV-304	ECONOMIZER NO. 3	3/4"ø	3/4"ø	25 GPM	275	

NOTE:
1. ALL SAFETY VALVES SHALL BE PROVIDED BY THE EQUIPMENT MANUFACTURER.
2. THE CONTRACTOR SHALL COMPLY WITH THE VA SAFETY DEVICE TESTING MANUAL (SDTM) FOR SETPOINT LIFE PRESSURE. PROVIDE TWO SAFETY RELIEF VALVES. THE FIRST ONE AT THE LOWEST SET PRESSURE AND SIZED TO RELIEVE 80% OF THE BOILER'S CAPACITY, AND THE SECOND SAFETY VALVE IS SIZED TO RELIEVE 100% OF THE BOILER'S CAPACITY.
3. THE CONTRACTOR SHALL COORDINATE WITH BOILER MANUFACTURER FOR PROPER SAFETY RELIEF VALVE SELECTION, AND FOLLOW ASME CODE.

STEAM TRAP SCHEDULE

TRAP NO.	GENERAL LOCATION DESCRIPTION	TYPE	CONN. SIZE	PRESSURE (PSIG)		DIFFERENTIAL PRESSURE (PSIG)		FLOW RATE (LB/HR.)			STEAM TEMP (°F)		REMARKS
				OPER.	MAX	OPER.	MAX	OPER. FLOW	SAFETY FACTOR	DESIGN FLOW	OPER.	MAX	
T-03	BOILER NO. 3 STEAM LINE	THERMODYNAMIC	1/2"	110	125	90	105	40	1.1	45	338	353	

DEVICES, VALVES, SWITCHES AND TESTING

PRESSURE SAFETY DEVICES AND TESTING:

- STEAM SAFETY VALVES
- RELIEF VALVES
- HIGH STEAM PRESSURE LIMIT SWITCHES
- BOILER HYDROSTATIC TESTING

FUEL TRAIN SAFETY DEVICES AND TESTING:

- LOW PRESSURE FUEL CUT-OFF SWITCH
- HIGH PRESSURE FUEL GAS CUT-OFF SWITCH
- VENT PIPING ASSEMBLY BETWEEN AUTOMATIC GAS SHUT-OFF VALVES
- AUTOMATIC FUEL SHUT OFF VALVES AND LEAK TESTING
- OIL LOW ATOMIZING MEDIA PRESSURE AND DIFFERENTIAL PRESSURE/FLOW SWITCHES
- AUTOMATIC FUEL SHUT-OFF VALVE PROOF OF CLOSURE SWITCH

BURNER AND AIR TRAIN SAFETY DEVICES AND TESTING:

- FLAME SCANNER
- LOW FIRE PROVING SWITCH
- COMBUSTION AIR PRESSURE SWITCH
- PURGE AIR FLOW PROVING SWITCH
- BURNER POSITION SWITCH
- FORCED DRAFT MOTOR INTERLOCK
- FURNACE PRESSURE INTERLOCK
- OUTLET STACK DAMPER POSITION INTERLOCK
- FORCED DRAFT DAMPER WIDE OPEN PRE-PURGE PROVING SWITCH
- PRE-PURGE AND POST-PURGE TIMERS
- IGNITER TIMER AND MAIN FLAME IGNITION TIMER
- AUTOMATIC FUEL SHUT-OFF VALVE CLOSURE TIME AFTER MAIN FLAME FAILURE
- AUTOMATIC FUEL SHUT-OFF VALVE CLOSURE TIMER AFTER PILOT FLAME FAILURE
- MINIMUM PILOT FLAME TEST
- CONTROL AIR PRESSURE INTERLOCK
- FLUE GAS RE-CIRCULATION DAMPER SET FOR PRE-PURGE
- LOW FLUE GAS OXYGEN LEVEL INTERLOCK
- OUTSIDE AIR DAMPER POSITION ALARM

NOTE:
(1) THIS LIST IS NOT ALL INCLUSIVE; REFER TO THE SDTM FOR A COMPLETE DESCRIPTION OF ALL TESTING REQUIREMENTS.
(2) THE CONTRACTOR SHALL PROVIDE THE BMS SYSTEM, ACCESSORIES, FITTINGS, ETC. IN FULL COMPLIANCE WITH NFPA 85

ECONOMIZER PERFORMANCE DUTY

ECONOMIZER #3

GENERAL ARRANGEMENT	HORIZONTAL FINNED TUBE, COUNTER FLOW UNIT
WATER SIDE	
FLUID ENTERING:	BOILER FEEDWATER
FLOW RATE:	12,075 PPH
ENTERING TEMPERATURE:	227°F
LEAVING TEMPERATURE:	263°F
OPERATING PRESSURE:	200 PSI
MAXIMUM PRESSURE DROP:	2.25 PSI
FOULING FACTOR:	0.0005
DESIGN PRESSURE:	300 PSI
FLUE GAS SIDE	
FLUID ENTERING:	FLUE GAS
FLOW RATE:	13,886 PPH
ENTERING TEMPERATURE:	425°F
LEAVING TEMPERATURE:	307°F
MAXIMUM PRESSURE DROP:	0.25 IN. W.C.
FOULING FACTOR:	0.001

BASIS OF DESIGN:
CLEAVER BROOKS MANUFACTURING COMPANY
MODEL # CRE-36F (OR) APPROVED EQUAL

NOTES

1. BOILER SHALL BE CONSTRUCTED, INSTALLED AND CERTIFIED IN ACCORDANCE WITH FOLLOWING,
   - THE ASME BOILER AND PRESSURE VESSEL CODE, SECTION I (OR) IV.
   - VHA BOILER PLANT SAFETY DEVICES TESTING MANUAL, LATEST EDITION.
   - NATIONAL FIRE PROTECTION ASSOCIATION (NFPA) 85 BOILER AND COMBUSTION SYSTEM HAZARDS, LATEST EDITION.
   - NFPA 70E STANDARD FOR ELECTRIC SAFETY IN THE WORK PLACE, LATEST EDITION
   - LOCAL AUTHORITY HAVING JURISDICTION
2. THE BOILER CONTROLS AND SAFETY DEVICES SHALL MEET THE REQUIREMENT OF NFPA 85 & ASME CSD-1. BOILER SHALL HAVE ALL CONTROLS SET, ADJUSTED AND TESTED BY THE INSTALLER. THE MANUFACTURER'S RATING DATA AND THE NAME PLATE SHALL BE ATTACHED TO THE BOILER.
3. A COMPLETE CONTROL SYSTEM AND BOILER OPERATING INSTRUCTIONS SHALL BE FURNISHED BY THE INSTALLER.
4. PROVIDE INDIVIDUAL SHUT-OFF VALVE IN THE SUPPLY AND RETURN PIPING.
5. THE CONTRACTOR SHALL PROVIDE SERVICE CLEARANCE AROUND THE BOILER FOR INSPECTION, SERVICING, REPLACEMENT OF ANY PARTS, AND VISIBILITY FOR ALL GAUGES.
6. THE BOILER SHALL BE PROTECTED WITH SAFETY VALVE AND RELIEF VALVES.
7. THE DISCHARGE PIPE SHALL BE THE SAME DIAMETER AS THE SAFETY (OR) RELIEF VALVE OUTLET.
8. THE SAFETY VALVE SHALL BE VENTED TO THE OUTSIDE OF THE BUILDING STRUCTURE.
9. THE BOILER SHALL BE EQUIPPED WITH CONTROLS AND LIMIT DEVICES AS REQUIRED BY THE MANUFACTURER'S INSTALLATION INSTRUCTIONS AND THE CONDITIONS OF THE LISTING.
10. PROVIDE LOW-WATER CUT-OFF CONTROL AND ACCESSORIES.
11. THE BOILER SHALL BE EQUIPPED WITH BOTTOM BLOW-OFF VALVE IN COMPLIANCE WITH SECTION 1008.1, INTERNATIONAL MECHANICAL CODE.
12. PROVIDE MINIMUM 36" MINIMUM CLEARANCE PATH BETWEEN THE BOILERS.
13. PROVIDE (2) SAFETY RELIEF VALVES. EACH SAFETY VALVE DISCHARGE INTO A DRIP PAN ELL WHICH DISCHARGES THROUGH A SLIP JOINT INTO AN OVER SIZED VENT PIPE THAT EXTENDS TO OUTSIDE THE BUILDING. EACH SAFETY VALVE SHALL HAVE A DEDICATED SEPARATE VENT LINE AND DRAIN PIPE. LIFT PRESSURES SHALL BE SEPERATED BY 5 PSI. THE CAPACITY OF THE SAFETY RELIEF VALVE WITH THE LOWER SET PRESSURE SHALL BE APPROXIMATELY 80% OF THE BOILER CAPACITY. THE SAFETY RELIEF VALVE WITH THE HIGHER SET PRESSURE SHALL BE SET TO THE FULL CAPACITY OF THE BOILER. THE SAFETY RELIEF VALVE SELECTION SHALL BE COORDINATED WITH BOILER AND BURNER MANUFACTURER.
14. PROVIDE TWO LOW-WATER CUT-OFF SWITCHES. ONE IS FLOAT TYPE AND SECOND ONE PROBE TYPE. PROVIDE INDIVIDUAL SHUNT TEST SWITCHES FOR BOTH LOW CUT-OFF SWITCHES.
15. A BOILER CONTROL SYSTEM SHOULD NEVER ALLOW THE BOILER TO AUTOMATICALLY RESTART AFTER A LOW WATER CUT-OFF HAS ACTUATED TO STOP BOILER OPERATION, AND ALL TRIP POINTS SHALL OCCUR WITH WATER CLEARLY IN THE SIGHT GLASS.
16. THE LOW WATER ALARM SHALL BE SET TO ACTIVATE BEFORE EITHER OF THE LOW WATER LEVEL CUT-OFF SWITCHES SHUTS OFF THE BOILER.
17. PROVIDE HIGH WATER ALARMS, AND THESE HIGH WATER ALARM SHALL BE CONDUCTIVITY PROBE.
18. PROVIDE (2) HIGH STEAM PRESSURE LIMIT SWITCHES. BOTH SWICTHES SHALL HAVE THE FUNCTION OF CAUSING THE TWO AUTOMATIC FUEL SHUT-OFF VALVES TO CLOSE IF A PRESENT PRESSURE LIMIT IS EXCEEDED. ONE SWITCH SHALL BE A RECYCLE SWITCH, ONCE THE PRESSURE FALLS BELOW THE SET POINT PRESSURE THE BOILER SHALL AUTOMATICALLY START. THE OTHER SWITCH SHALL BE NON-RECYCLE SWITCH SHALL BE MANUALLY RESET AFTER A PRESSURE EXCURSION ABOVE ITS LIMITS.
19. PROVIDE NAME PLATE OF NATIONAL BOARD CERTIFICATE FOR VESSEL & HEAD TO SHOW PRESSURE & TEMPERATURE, AND INSTALL NB NO. INSPECTION-ASME-UPVC STAMP.

NOTE:

THE CONTRACTOR SHALL PROVIDE THE BMS SYSTEM, ACCESSORIES, FITTINGS, ETC. IN FULL COMPLIANCE WITH NFPA 85

NO.	DESCRIPTION	DATE
	30% SUBMISSION	02-23-2022
	30% SUBMISSION (RESUBMISSION)	12-30-2022
	60% SUBMISSION	11-24-2023
	100% SUBMISSION	03-27-2024
	100%-2ND SUBMISSION	05-14-2024
	BID DOCUMENTS	05-20-2025

CONSULTANTS:

SEAL
AMBRISH K. RASTOGI
REGISTERED
043193
DATE OF
WEST VIRGINIA
PROFESSIONAL ENGINEER
SIGNATURE:

ARCHITECT/ENGINEERS:
A DESIGN GROUP, LLC
ART - ARCHITECTURE - ENGINEERING
2787 HILL ROAD
VIENNA, VA 22181
FRANK V. STURGEON, AIA
AMBRISH RASTOGI, PE
703.938.5226
FRANK@ADG10.COM

Drawing Title: SCHEDULES
Approved: Project Director
Project Title: Replace Boiler #3
Location: Clarksburg WV Medical Center
Date: 05/20/2025
Checked: AR
Drawn: AM
Project Number: 540-22-103
Building Number: NO. 1
Drawing Number: MJ101
Dwg. 14 of 25

Office of Construction and Facilities Management
Department of Veterans Affairs

VA FORM 08-6231

IF THIS SHEET IS NOT 30" X42" FULL SIZE, USE GRAPHIC SCALE.

BOILER DEVICE SCHEDULE

BOILER NO. 3 LABEL	DEVICE TYPE	SYSTEM / FUNCTION	MOUNTING / LOCATION	RANGE / SETPOINT	POINT TYPE	SIGNAL	SIGNAL TO / FROM	ANNUNCIATION LOCATION	ANNUNCIATION TYPE	REMARKS
BE–301	FLAME SCANNER	BURNER FLAME MONITOR	BURNER	N/A	DO	0 – 5V	BMS	BMS	BURNER FLAME FAILURE STATUS	BMS POINT
DPS–301	DIFFERENTIAL PRESSURE SWITCH	DIFFERENTIAL PRESSURE ATOMIZING STEAM FUEL OIL	FUEL OIL & ATOMIZING STEAM TRAINS / BOILER SIDE	FIELD SET	DO	0 – 120V	BMS	BMS	LOW FO / ATOM. STM. DIFF. PRESS.	BMS POINT
DPT–301	DIFFERENTIAL PRESSURE TRANSMITTER	WATER LEVEL INDICATION	BOILER SIDE	N/A	AO	4–20 mA DC	BCP	BCP	LEVEL	
DPT–302	DIFFERENTIAL PRESSURE TRANSMITTER	BOILER DRAFT / FLOW	BOILER FURNACE / BOILER SIDE	N/A	AO	4–20 mA DC	BCP	BCP	RATE	
FCV–301	FLOW CONTROL VALVE	BOILER FEEDWATER / LEVEL	BOILER FEEDWATER / BOILER SIDE, ECONOMIZER OUTLET							
FCV–302	FLOW CONTROL VALVE	FUEL OIL / FLOW	FUEL OIL TRAIN / BOILER SIDE							
FCV–303	FLOW CONTROL VALVE	NATURAL GAS / FLOW	NATURAL GAS TRAIN / BOILER SIDE							
FE–301	VORTEX SHEDDING FLOW METER	STEAM / FLOW – 110 PSI SATURATED, 6" PIPE	STEAM / BOILER OUTLET	1,300 – 13,000 PPH	AO	4–20 mA DC	BCP	N/A	N/A	
FE–302	POSITIVE DISPLACEMENT FLOW METER	BOILER FEEDWATER / FLOW – 200 PSI, 220°F, 2" PIPE	BOILER FEEDWATER / BOILER SIDE, ECONOMIZER INLET	3 – 30 GPM	AO	4–20 mA DC	BCP	N/A	N/A	
FE–303	POSITIVE DISPLACEMENT FLOW METER	FUEL OIL NO. 2 / FLOW – 100 PSI, 1" PIPE	FUEL OIL TRAIN / BOILER SIDE	10.5 – 105 GPH	AO	4–20 mA DC	BCP	N/A	N/A	
FE–304	POSITIVE DISPLACEMENT FLOW METER	NATURAL GAS / FLOW – 5 PSI, 3" PIPE	NATURAL GAS TRAIN / BOILER SIDE	1,500 – 15,000 SCFH	AO	4–20 mA DC	BCP	N/A	N/A	
FS–301	FLOW SWITCH	BOILER DRAFT / PURGE AIR	FD FAN / OUTLET	FIELD SET	DO	0 – 120V	BMS	BMS	PURGE FLOW STATUS	BMS POINT
FS–302	FLOW SWITCH	BOILER DRAFT / LOW AIR	FD FAN / OUTLET	FIELD SET	DO	0 – 120V	BMS	BMS	FD FAN FAILURE	BMS POINT
FSV–301	FLOW SAFETY VALVE	ATOMIZING STEAM–AIR / AUTOMATIC SHUT–OFF	ATOMIZING STEAM–AIR TRAIN / BOILER SIDE	OPEN / CLOSE	DI	120V	BMS	N/A	N/A	BMS POINT
FSV–302	FLOW SAFETY VALVE	FUEL OIL / AUTOMATIC SHUT–OFF	FUEL OIL TRAIN / BOILER SIDE	OPEN / CLOSE	DI	120V	BMS	N/A	N/A	BMS POINT
FSV–303	FLOW SAFETY VALVE	FUEL OIL / AUTOMATIC SHUT–OFF	FUEL OIL TRAIN / BOILER SIDE	OPEN / CLOSE	DI	120V	BMS	N/A	N/A	BMS POINT
FSV–304	FLOW SAFETY VALVE	NATURAL GAS / AUTOMATIC SHUT–OFF	NATURAL GAS TRAIN / BOILER SIDE	OPEN / CLOSE	DI	120V	BMS	N/A	N/A	BMS POINT
FSV–305	FLOW SAFETY VALVE	NATURAL GAS / AUTOMATIC SHUT–OFF	NATURAL GAS TRAIN / BOILER SIDE	OPEN / CLOSE	DI	120V	BMS	N/A	N/A	BMS POINT
FSV–306	FLOW SAFETY VALVE	NATURAL GAS / AUTOMATIC VENT	NATURAL GAS TRAIN / BOILER SIDE	OPEN / CLOSE	DI	120V	BMS	N/A	N/A	BMS POINT
FSV–307	FLOW SAFETY VALVE	IGNITOR GAS / AUTOMATIC SHUT–OFF	IGNITOR GAS TRAIN / BOILER SIDE	OPEN / CLOSE	DI	120V	BMS	N/A	N/A	BMS POINT
FSV–308	FLOW SAFETY VALVE	IGNITOR GAS / AUTOMATIC SHUT–OFF	IGNITOR GAS TRAIN / BOILER SIDE	OPEN / CLOSE	DI	120V	BMS	N/A	N/A	BMS POINT
FSV–309	FLOW SAFETY VALVE	IGNITOR GAS / AUTOMATIC VENT	IGNITOR GAS TRAIN / BOILER SIDE	OPEN / CLOSE	DI	120V	BMS	N/A	N/A	BMS POINT
FSV–310	FLOW SAFETY VALVE	NATURAL GAS / AUTOMATIC SHUT–OFF	NATURAL GAS / BULDING ENTRANCE	OPEN / CLOSE	DI	120V	BMS	N/A	N/A	EXISTING CONTROL POINT
IS–301	IGNITION TRANSFORMER	BOILER DRAFT / BURNER IGNITION	BURNER							
LSH–301	LEVEL SWITCH	HIGH WATER LEVEL ALARM	BOILER SIDE	FIELD SET	DO	120V	BMS	BMS	HIGH WATER LEVEL	BMS POINT
LSL–301	LEVEL SWITCH	LOW WATER LEVEL ALARM	BOILER SIDE	FIELD SET	DO	120V	BMS	BMS	LOW WATER LEVEL	BMS POINT
LSLL–301	LEVEL SWITCH	LOW–LOW WATER LEVEL ALARM	BOILER SIDE	FIELD SET	DO	120V	BMS	BMS	LOW–LOW WATER LEVEL	BMS POINT
LSLL–302	LEVEL SWITCH	LOW–LOW WATER LEVEL CUT–OUT	BOILER SIDE	FIELD SET	DO	120V	BMS	BMS	LOW–LOW WATER LEVEL	BMS POINT
PCV–304	PRESSURE CONTROL VALVE	ATOMIZING STEAM–AIR / REGULATE PRESSURE	ATOMIZING STEAM–AIR TRAIN / BOILER SIDE	0 – 200 PSIG	N/A	N/A	N/A	N/A	N/A	
PCV–305	PRESSURE CONTROL VALVE	NATURAL GAS / REGULATE PRESSURE	NATURAL GAS TRAIN / BOILER SIDE	0 – 20 PSIG	N/A	N/A	N/A	N/A	N/A	
PCV–306	PRESSURE CONTROL VALVE	IGNITOR GAS / REGULATE PRESSURE	IGNITOR GAS TRAIN / BOILER SIDE	0 – 20 PSIG	N/A	N/A	N/A	N/A	N/A	
PI–301	PRESSURE INDICATOR	ATOMIZING STEAM–AIR / INDICATE PRESSURE	ATOMIZING STEAM–AIR TRAIN / BOILER SIDE	0 – 200 PSIG	N/A	N/A	N/A	N/A	N/A	
PI–302	PRESSURE INDICATOR	BOILER FEEDWATER / INDICATE PRESSURE	BOILER FEEDWATER / BOILER SIDE, ECONOMIZER INLET	0 – 300 PSIG	N/A	N/A	N/A	N/A	N/A	
PI–303	PRESSURE INDICATOR	FUEL OIL / INDICATE PRESSURE	FUEL OIL TRAIN / BOILER SIDE	0 – 200 PSIG	N/A	N/A	N/A	N/A	N/A	
PI–304	PRESSURE INDICATOR	FUEL OIL / INDICATE PRESSURE	FUEL OIL TRAIN / BOILER SIDE	0 – 200 PSIG	N/A	N/A	N/A	N/A	N/A	
PI–305	PRESSURE INDICATOR	FUEL OIL / INDICATE PRESSURE	FUEL OIL TRAIN / BOILER SIDE	0 – 200 PSIG	N/A	N/A	N/A	N/A	N/A	
PI–306	PRESSURE INDICATOR	NATURAL GAS / INDICATE PRESSURE	NATURAL GAS TRAIN / BOILER SIDE	0 – 30 PSIG	N/A	N/A	N/A	N/A	N/A	
PI–307	PRESSURE INDICATOR	NATURAL GAS / INDICATE PRESSURE	NATURAL GAS TRAIN / BOILER SIDE	0 – 5 PSIG	N/A	N/A	N/A	N/A	N/A	
PI–308	PRESSURE INDICATOR	NATURAL GAS / INDICATE PRESSURE	NATURAL GAS TRAIN / BOILER SIDE	0 – 5 PSIG	N/A	N/A	N/A	N/A	N/A	
PI–309	PRESSURE INDICATOR	IGNITOR GAS / INDICATE PRESSURE	IGNITOR GAS TRAIN / BOILER SIDE	0 – 30 PSIG	N/A	N/A	N/A	N/A	N/A	
PI–310	PRESSURE INDICATOR	IGNITOR GAS / INDICATE PRESSURE	IGNITOR GAS TRAIN / BOILER SIDE	0 – 5 PSIG	N/A	N/A	N/A	N/A	N/A	
PI–311	PRESSURE INDICATOR	COMPRESSED AIR / INDICATE PRESSURE	COMPRESSED AIR / BURNER SIDE	0 – 5 PSIG	N/A	N/A	N/A	N/A	N/A	
PSH–301A	PRESSURE SWITCH	STEAM / HIGH PRESSURE ALARM & CUT–OUT	STEAM / BOILER OUTLET	FIELD SET	DO	0 – 120V	BMS	BMS	HIGH STEAM PRESSURE	BMS POINT
PSH–301B	PRESSURE SWITCH	STEAM / HIGH PRESSURE ALARM & CUT–OUT	STEAM / BOILER OUTLET	FIELD SET	DO	0 – 120V	BMS	BMS	HIGH STEAM PRESSURE	BMS POINT
PSH–302	PRESSURE SWITCH	ATOMIZING STEAM–AIR / HIGH PRESSURE ALARM	ATOMIZING STEAM–AIR TRAIN / BOILER SIDE	FIELD SET	DO	0 – 120V	BMS	BMS	HIGH ATOMIZING PRESSURE	BMS POINT
PSH–303	PRESSURE SWITCH	FUEL OIL / HIGH PRESSURE ALARM	FUEL OIL TRAIN / BOILER SIDE	FIELD SET	DO	0 – 120V	BMS	BMS	HIGH FUEL OIL PRESSURE	BMS POINT
PSH–304	PRESSURE SWITCH	NATURAL GAS / HIGH PRESSURE ALARM	NATURAL GAS TRAIN / BOILER INLET	FIELD SET	DO	0 – 120V	BMS	BMS	HIGH NATURAL GAS PRESSURE	BMS POINT
PSH–305	PRESSURE SWITCH	IGNITOR GAS / HIGH PRESSURE ALARM	IGNITOR GAS TRAIN / BOILER SIDE	FIELD SET	DO	0 – 120V	BMS	BMS	HIGH IGNITOR GAS PRESSURE	BMS POINT
PSH–310	PRESSURE SWITCH	BOILER DRAFT / HIGH PRESSURE ALARM	BOILER FURNACE / BOILER SIDE	FIELD SET	DO	0 – 120V	BMS	BMS	HIGH FURNACE PRESSURE	BMS POINT
PSL–306	PRESSURE SWITCH	ATOMIZING STEAM–AIR / LOW PRESSURE ALARM	ATOMIZING STEAM–AIR TRAIN / BOILER SIDE	FIELD SET	DO	0 – 120V	BMS	BMS	LOW ATOMIZING PRESSURE	BMS POINT
PSL–307	PRESSURE SWITCH	FUEL OIL / LOW PRESSURE ALARM	FUEL OIL TRAIN / BOILER SIDE	FIELD SET	DO	0 – 120V	BMS	BMS	LOW FUEL OIL PRESSURE	BMS POINT
PSL–308	PRESSURE SWITCH	NATURAL GAS / LOW PRESSURE ALARM	NATURAL GAS TRAIN / BOILER SIDE	FIELD SET	DO	0 – 120V	BMS	BMS	LOW NATURAL GAS PRESSURE	BMS POINT
PSL–309	PRESSURE SWITCH	IGNITOR GAS / LOW PRESSURE ALARM	IGNITOR GAS TRAIN / BOILER SIDE	FIELD SET	DO	0 – 120V	BMS	BMS	LOW IGNITOR GAS PRESSURE	BMS POINT
PSV–301	PRESSURE SAFETY VALVE	STEAM / PRESSURE RELIEF	BOILER TOP	FIELD SET/TO BE SCHEDULED	N/A	N/A	N/A	N/A	N/A	
PSV–302	PRESSURE SAFETY VALVE	STEAM / PRESSURE RELIEF	BOILER TOP	FIELD SET/TO BE SCHEDULED	N/A	N/A	N/A	N/A	N/A	
PSV–303	PRESSURE SAFETY VALVE	STEAM / PRESSURE RELIEF	BOILER TOP	FIELD SET/TO BE SCHEDULED	N/A	N/A	N/A	N/A	N/A	
PSV–304	PRESSURE SAFETY VALVE	BOILER FEEDWATER / PRESSURE RELIEF	ECONOMIZER OUTLET	FIELD SET/TO BE SCHEDULED	N/A	N/A	N/A	N/A	N/A	
PT–311	PRESSURE TRANSMITTER	STEAM / PRESSURE	STEAM / BOILER OUTLET	0 – 200 PSIG	AO	4–20 mA DC	BCP	BCP	STATUS	COMBUSTION CONTROL POINT
PT–312	PRESSURE TRANSMITTER	ATOMIZING STEAM–AIR / PRESSURE	ATOMIZING STEAM–AIR TRAIN / BOILER SIDE	0 – 200 PSIG	AO	4–20 mA DC	BCP	BCP	STATUS	COMBUSTION CONTROL POINT
PT–313	PRESSURE TRANSMITTER	BOILER FEEDWATER / PRESSURE	BOILER FEEDWATER / BOILER SIDE, ECONOMIZER OUTLET	0 – 300 PSIG	AO	4–20 mA DC	BCP	BCP	STATUS	COMBUSTION CONTROL POINT
PT–314	PRESSURE TRANSMITTER	BOILER EXHAUST / PRESSURE	BOILER EXHAUST BREECHING / BOILER OUTLET, ECONOMIZER INLET	–10 – 5 IN. W.C.	AO	4–20 mA DC	BCP	BCP	STATUS	COMBUSTION CONTROL POINT
PT–315	PRESSURE TRANSMITTER	BOILER EXHAUST / PRESSURE	BOILER EXHAUST BREECHING / ECONOMIZER OUTLET	–10 – 5 IN. W.C.	AO	4–20 mA DC	BCP	BCP	STATUS	COMBUSTION CONTROL POINT
PT–316	PRESSURE TRANSMITTER	FUEL OIL / PRESSURE	FUEL OIL TRAIN / BOILER SIDE	0 – 200 PSIG	AO	4–20 mA DC	BCP	BCP	STATUS	COMBUSTION CONTROL POINT
PT–317	PRESSURE TRANSMITTER	NATURAL GAS / PRESSURE	NATURAL GAS TRAIN / BOILER SIDE	0 – 20 PSIG	AO	4–20 mA DC	BCP	BCP	STATUS	COMBUSTION CONTROL POINT
PT–318	PRESSURE TRANSMITTER	STEAM / PRESSURE	STEAM HEADER	0 – 200 PSIG	AO	4–20 mA DC	BCP	BCP	STATUS	COMBUSTION CONTROL POINT
TI–301	TEMPERATURE INDICATION	BOILER FEEDWATER / INDICATE TEMPERATURE	BOILER FEEDWATER / BOILER SIDE, ECONOMIZER INLET	0 – 400°F	N/A	N/A	N/A	N/A	N/A	
TI–302	TEMPERATURE INDICATION	BOILER EXHAUST / INDICATE TEMPERATURE	BOILER EXHAUST BREECHING / BOILER OUTLET, ECONOMIZER INLET	0 – 600°F	N/A	N/A	N/A	N/A	N/A	
TI–303	TEMPERATURE INDICATION	BOILER EXHAUST / INDICATE TEMPERATURE	BOILER EXHAUST BREECHING / ECONOMIZER OUTLET	0 – 600°F	N/A	N/A	N/A	N/A	N/A	
TI–304	TEMPERATURE INDICATION	FUEL OIL / INDICATE TEMPERATURE	FUEL OIL TRAIN / BOILER SIDE	0 – 150°F	N/A	N/A	N/A	N/A	N/A	
TT–305	TEMPERATURE TRANSMITTER	STEAM / TEMPERATURE	STEAM / BOILER OUTLET	0 – 500°F	AO	4–20 mA DC	BCP	BCP	STATUS	PROVIDE W/ TE–105
TT–306	TEMPERATURE TRANSMITTER	BOILER FEEDWATER / TEMPERATURE	BOILER FEEDWATER / BOILER SIDE, ECONOMIZER INLET	0 – 400°F	AO	4–20 mA DC	BCP	BCP	STATUS	PROVIDE W/ TE–106
TT–307	TEMPERATURE TRANSMITTER	BOILER FEEDWATER / TEMPERATURE	BOILER FEEDWATER / BOILER SIDE, ECONOMIZER OUTLET	0 – 400°F	AO	4–20 mA DC	BCP	BCP	STATUS	PROVIDE W/ TE–107
TT–308	TEMPERATURE TRANSMITTER	BOILER EXHAUST / TEMPERATURE	BOILER EXHAUST BREECHING / BOILER OUTLET, ECONOMIZER INLET	0 – 600°F	AO	4–20 mA DC	BCP	BCP	STATUS	PROVIDE W/ TE–108
TT–309	TEMPERATURE TRANSMITTER	BOILER EXHAUST / TEMPERATURE	BOILER EXHAUST BREECHING / ECONOMIZER OUTLET	0 – 600°F	AO	4–20 mA DC	BCP	BCP	STATUS	PROVIDE W/ TE–109
TT–310	TEMPERATURE TRANSMITTER	FUEL OIL / TEMPERATURE	FUEL OIL TRAIN / BOILER SIDE	0 – 150°F	AO	4–20 mA DC	BCP	BCP	STATUS	PROVIDE W/ TE–110
ZSC–301	POSITION SWITCH	BOILER FEEDWATER / POSITION VERIFICATION	FCV–101	N/A	AI/PO	4–20 mA DC	BCP	BCP	POSITION INDICATION (%)	COMBUSTION CONTROL POINT
ZSC–302	POSITION SWITCH	FUEL OIL / POSITION VERIFICATION	FCV–102	N/A	AI/PO	4–20 mA DC	BCP	BCP	POSITION INDICATION (%)	COMBUSTION CONTROL POINT
ZSC–303	POSITION SWITCH	NATURAL GAS / POSITION VERIFICATION	FCV–103	N/A	AI/PO	4–20 mA DC	BCP	BCP	POSITION INDICATION (%)	COMBUSTION CONTROL POINT
ZSO–301	POSITION SWITCH	BOILER FEEDWATER / POSITION VERIFICATION	FCV–101	N/A	AI/PO	4–20 mA DC	BCP	BCP	POSITION INDICATION (%)	COMBUSTION CONTROL POINT
ZSO–302	POSITION SWITCH	FUEL OIL / POSITION VERIFICATION	FCV–102	N/A	AI/PO	4–20 mA DC	BCP	BCP	POSITION INDICATION (%)	COMBUSTION CONTROL POINT
ZSO–303	POSITION SWITCH	NATURAL GAS / POSITION VERIFICATION	FCV–103	N/A	AI/PO	4–20 mA DC	BCP	BCP	POSITION INDICATION (%)	COMBUSTION CONTROL POINT
ZS–304	POSITION SWITCH	BOILER EXHAUST / POSITION VERIFICATION	BOILER EXHAUST DAMPER / BOILER OUTLET	N/A	AI/PO	4–20 mA DC	BCP	BCP	POSITION INDICATION (OPEN/CLOSED)	COMBUSTION CONTROL POINT
ZS–305	POSITION SWITCH	BURNER DRAFT / POSITION VERIFICATION	FD FAN DAMPER / FD FAN OUTLET	N/A	AI/PO	4–20 mA DC	BCP	BCP	POSITION INDICATION (%)	COMBUSTION CONTROL POINT
ZS–306	POSITION SWITCH	BURNER DRAFT / POSITION VERIFICATION	BURNER OIL GUN	FIELD SET	DO	0 – 24V DC	BMS	BMS	OIL GUN NOT INSTALLED	BMS POINT
ZS–307	LOW FIRE PROVING SWITCH	POSITION VERIFICATION	BURNER OIL GUN	FIELD SET	DO	0 – 24V DC	BMS	BMS		BMS POINT
ZS–308	NO COMBUSTION AIR PRESSURE SWITCH	POSITION VERIFICATION	BURNER OIL GUN	FIELD SET	DO	0 – 24V DC	BMS	BMS		BMS POINT
ZS–309	PURGE AIR FLOOR PROVING SWITCH	POSITION VERIFICATION	BURNER OIL GUN	FIELD SET	DO	0 – 24V DC	BMS	BMS		BMS POINT
ZS–310	FORCED DRAFT MOTOR INTERLOCK	POSITION VERIFICATION		FIELD SET	DO	0 – 24V DC	BMS	BMS		BMS POINT
ZS–311	FURNACE PRESSURE INTERLOCK	POSITION VERIFICATION		FIELD SET	DO	0 – 24V DC	BMS	BMS		BMS POINT

NOTES:

1. BMS – BURNER MANAGEMENT SYSTEM.
2. BCP – BOILER CONTROL PANEL.

BOILER COMBUSTION CONTROL OPERATION

THE COMBUSTION INSTRUMENTATION AND CONTROL SHALL BE A FULLY METERED CROSS LIMITED SYSTEM. THE CROSS LIMITING CONTROLS PROTECT THE SYSTEM AGAINST A FUEL RICH MIXTURE ON A LOAD INCREASE. WHEN THE LOAD INCREASES, AIR SUPPLY LEADS THE FUEL SUPPLY. DURING A LOAD DECREASE FUEL SUPPLY LEADS AIR SUPPLY. THE FOLLOWING DESCRIBES THE FUNCTION AND CONTROL ACTIONS WHICH OCCUR IN RESPONSE TO CHANGES IN PLANT STEAM PRESSURE.

THE PRIMARY VARIABLE (STEAM PRESSURE) IS MEASURED AND COMPARED TO SET POINT. THE DIFFERENCE IS ACTED UPON BY A PROPORTIONAL PLUS INTEGRAL CONTROL BLOCK (PLANT MASTER PRESSURE CONTROLLER), AND THE OUTPUT IS TRANSMITTED TO A HAND/AUTO CONTROL BLOCK. THE OUTPUT FROM THE MASTER PRESSURE CONTROL BLOCK IS THE FIRING RATE DEMAND SIGNAL WHICH IS DIRECTED TO THE BOILER MASTER CONTROL BLOCK FOR EACH BOILER. THE BOILER MASTER CONTROL BLOCK SHALL HAVE AN OPERATOR ADJUSTABLE BIAS FOR LOAD BALANCING, AND THE OUTPUT SHALL BE THE FIRING RATE DEMAND FOR FUEL AND AIR FOR THE BOILER.

IN ORDER TO CONTROL FUEL FLOW, THE LOW SIGNAL SELECTOR SELECTS THE LOWER VALUE OF THE FIRING RATE DEMAND SIGNAL AND MEASURED AIR FLOW SIGNAL. THE SIGNAL FROM THE LOW SELECTOR IS THE FUEL FLOW DEMAND SIGNAL, WHICH BECOMES THE REMOTE SETPOINT TO THE FUEL FLOW CONTROL BLOCK. THE TOTAL FUEL FLOW (PROCESS VARIABLE SIGNAL) TO THE FUEL FLOW CONTROL BLOCK IS THE SQUARE ROOT SIGNAL FROM THE GAS FLOW TRANSMITTER OR THE LINEAR SIGNAL FROM THE OIL FLOW TRANSMITTER. THE FUEL FLOW CONTROL BLOCK SHALL ENABLE FUEL SELECTION WHICH WILL CAUSE THE CONTROL BLOCK TO ACCEPT THE FUEL FLOW INPUT SIGNAL FROM EITHER THE GAS FLOW TRANSMITTER OR OIL FLOW TRANSMITTER. THE DIFFERENCE BETWEEN THE REMOTE SETPOINT AND THE PROCESS VARIABLE IS ACTED UPON BY PROPORTIONAL/INTERGRAL CONTROL LOGIC AT THE FUEL FLOW CONTROL BLOCK. AFTER PASSING THROUGH AN AUTO/MANUAL CONTROL BLOCK, THE OUTPUT IS THE POSITION DEMAND SIGNAL TO THE GAS OR OIL VALVE, DEPENDING ON THE FUEL SELECTION AT THE FUEL FLOW CONTROL BLOCK.

IN ORDER TO CONTROL AIR FLOW, THE HIGH SIGNAL SELECTOR SELECTS THE HIGHER OF THE FIRING RATE DEMAND SIGNALS FROM THE BOILER MASTER CONTROL BLOCK, THE MEASURED FUEL FLOW SIGNAL AND THE MINIMUM BOILER AIR FLOW RATE. THE SIGNAL FROM THE HIGH SELECTOR IS THE REMOTE SETPOINT TO THE AIR FLOW CONTROL BLOCK. THE TOTAL AIR FLOW SIGNAL FROM THE AIR FLOW (DIFFERENTIAL PRESSURE) TRANSMITTER IS LINEARIZED BY THE SQUARE ROOT EXTRACTOR AND IS TRANSMITTED TO THE FUEL/AIR RATIO CONTROL BLOCK. THE RATIO CONTROL BLOCK ALLOWS FOR ADJUSTMENT TO COMPENSATE FOR POSSIBLE VARIANCES IN THE FUEL HEATING VALUE. THE OUTPUT OF THE FUEL/AIR RATIO CONTROL BLOCK IS THE AIR FLOW PROCESS VARIABLE SIGNAL TO THE AIR FLOW CONTROL BLOCK. THE CONTROL BLOCK COMPARES THE AIR FLOW PROCESS VARIABLE SIGNAL TO THE REMOTE INPUT FROM THE HIGH SIGNAL SELECTOR AND TAKES PROPORTIONAL/INTERGRAL ACTION ON THE DIFFERENCE. THE OUTPUT SIGNAL FROM THE CONTROL BLOCK PASSES THROUGH AN AUTO/MANUAL CONTROL BLOCK AND IS THE POSITION DEMAND FOR THE FD FAN INLET OR DISCHARGE DAMPERS ON THE BOILER. THE PURGE TRANSFER BLOCK REPRESENTS THE REQUIRED INTERFACE WITH THE BURNER MANAGEMENT SYSTEM FOR PURGE LOGIC AND OTHER REQUIRED BOILER LIGHT–OFF PROCEDURES.

BOILER FEEDWATER CONTROL OPERATION

THE SYSTEM IS A THREE ELEMENT FEEDWATER SYSTEM WHICH MAINTAINS A NORMAL WATER LEVEL IN THE BOILER BASED ON THREE INDEPENDENT VARIABLES:

- STEAM FLOW FROM THE BOILER,
- FEEDWATER FLOW TO THE BOILER,
- AND WATER LEVEL IN THE BOILER.

THE STEAM FLOW SIGNAL FROM THE DIFFERENTIAL PRESSURE TRANSMITTER ESTABLISHES AN INITIAL DEMAND FOR FEEDWATER. THE STEAM FLOW SIGNAL IS SUMMED WITH AND BIASED BY A SIGNAL FROM THE BOILER LEVEL CONTROLLER. THE SIGNAL FROM THE BOILER LEVEL CONTROLLER IS DEVELOPED BY COMPARING THE TRANSMITTED BOILER LEVEL SIGNAL TO AN ESTABLISHED SETPOINT. THE DIFFERENCE RESULTING FROM THIS COMPARISON HAS PROPORTIONAL PLUS INTEGRAL ACTION TAKEN UPON IT, AND THE RESULTING SIGNAL IS SUMMED WITH THE STEAM FLOW SIGNAL. THE OUTPUT OF THE STEAM FLOW–DRUM LEVEL ERROR SUMMATOR BECOMES A DEMAND FOR FEEDWATER IN THE FEEDWATER FLOW CONTROLLER. THE FEEDWATER FLOW CONTROLLER COMPARES THE FEEDWATER DEMAND SIGNAL AGAINST THE ACTUAL LINEARIZED FEEDWATER FLOW SIGNAL FROM THE FEEDWATER FLOW TRANSMITTER AND TAKES PROPORTIONAL PLUS INTEGRAL ACTION ON THE RESULTING DIFFERENCE. THE SIGNAL FROM THE FEEDWATER FLOW CONTROLLER PASSES THROUGH THE AUTO/MANUAL STATION AND BECOMES THE POSITION DEMAND FOR THE FEEDWATER VALVE.

NOTE:

THE CONTRACTOR SHALL PROVIDE THE BMS SYSTEM, ACCESSORIES, FITTINGS, ETC. IN FULL COMPLIANCE WITH NFPA 85

NO.	DESCRIPTION	DATE
	30% SUBMISSION	02-23-2022
	30% SUBMISSION (RESUBMISSION)	12-30-2022
	60% SUBMISSION	11-24-2023
	100% SUBMISSION	03-27-2024
	100%-2ND SUBMISSION	05-14-2024
	BID DOCUMENTS	05-20-2025

CONSULTANTS:

SEAL

AMBRISH K. RASTOGI REGISTERED 00193 STATE OF WEST VIRGINIA PROFESSIONAL ENGINEER

SIGNATURE:

ARCHITECT/ENGINEERS:

A DESIGN GROUP, LLC
ART - ARCHITECTURE - ENGINEERING
2787 HILL ROAD
VIENNA, VA 22181

FRANK V. STURGEON, AIA

AMBRISH RASTOGI, PE

703.938.5226
FRANK@ADG10.COM

Approved: Project Director

Drawing Title	CONTROLS
Project Title	Replace Boiler #3
Project Number	540-22-103
Building Number	NO. 1
Location	Clarksburg WV Medical Center
Date	05/20/2025
Checked	AR
Drawn	AM
Drawing Number	MI101
	Dwg. 15 of 25

Office of Construction and Facilities Management

Department of Veterans Affairs

VA FORM 08-6231

IF THIS SHEET IS NOT 30" X42" FULL SIZE, USE GRAPHIC SCALE:

FUEL TRIP SYSTEM

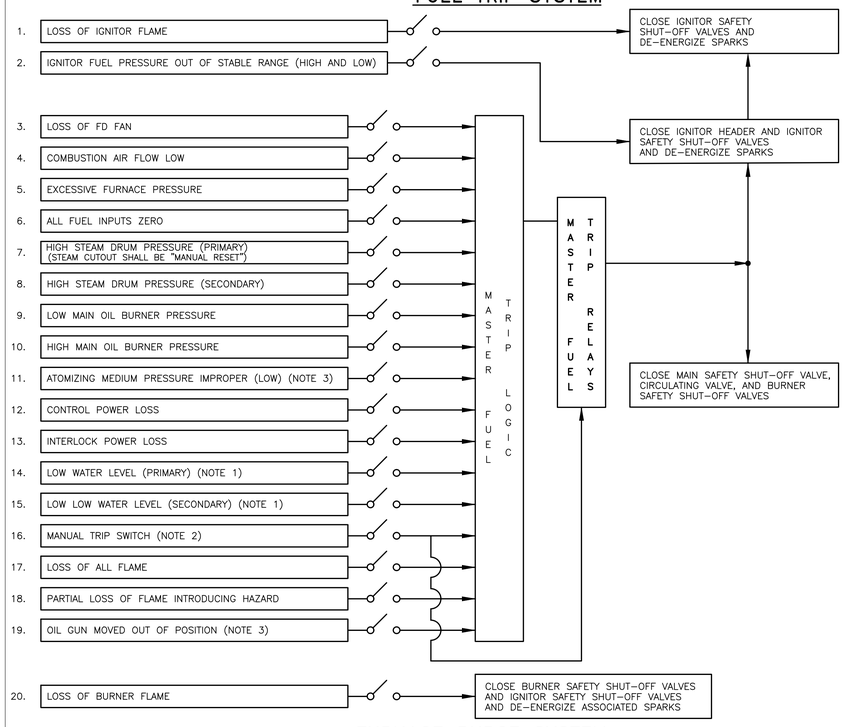

FURNACE PURGE SYSTEM

BOILER FUEL TRIP SYSTEM LOGIC DIAGRAM

SCALE: NONE

NOTES:

1. PROVIDE PUSHBUTTON BY-PASS SWITCH FOR MANUAL OVERRIDE TO TEST BOTH WATER LEVEL TRIPS. RELEASE OF PUSHBUTTON DURING TESTING SHALL CAUSE MASTER FUEL TRIP.
2. MANUAL TRIP SWITCHES SHALL BE PROVIDED AT THE BOILER PLANT EXITS AND AT BOILER #3 CONTROL PANEL.
3. INPUT NOT REQUIRED WHEN FIRING NATURAL GAS.
4. PROVIDE ALARMS, TRIP, AND STATUS.

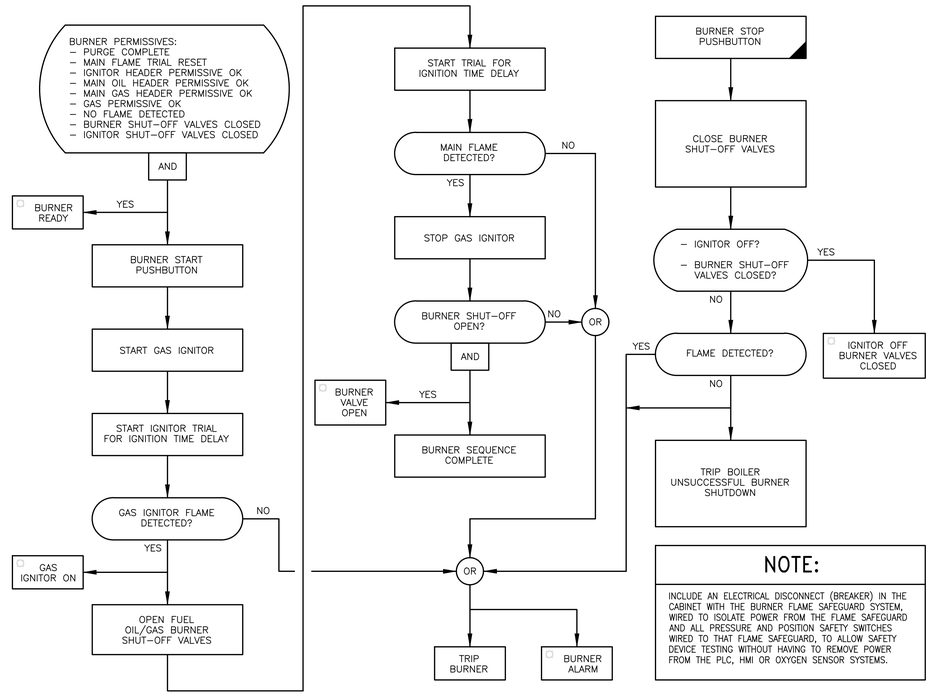

BOILER IGNITION LOGIC DIAGRAM FOR NO. 2 FUEL/NATURAL GAS

SCALE: NONE

NOTE:

INCLUDE AN ELECTRICAL DISCONNECT (BREAKER) IN THE CABINET WITH THE BURNER FLAME SAFEGUARD SYSTEM, WIRED TO ISOLATE POWER FROM THE FLAME SAFEGUARD AND ALL PRESSURE AND POSITION SAFETY SWITCHES WIRED TO THAT FLAME SAFEGUARD, TO ALLOW SAFETY DEVICE TESTING WITHOUT HAVING TO REMOVE POWER FROM THE PLC, HMI OR OXYGEN SENSOR SYSTEMS.

BOILER NOS. 3-REQUIRED ALARMS AND TRIPS

DESCRIPTION	ALARM	TRIP
STEAM HIGH PRESSURE	X	X
HIGH WATER LEVEL	X	
LOW WATER LEVEL	X	
LOW LOW WATER LEVEL	X	X
LOW LOW WATER LEVEL (AUXILIARY)	X	X
FUEL GAS LOW PRESSURE	X	X
FUEL GAS HIGH PRESSURE	X	X
FUEL IGNITOR GAS LOW PRESSURE	X	X
FUEL IGNITOR GAS HIGH PRESSURE	X	X
FUEL OIL NO. 2 LOW PRESSURE	X	X
FUEL OIL NO. 2 HIGH PRESSURE	X	X
FUEL OIL NO. 2 TO ATOMIZING STEAM/AIR HIGH DIFF. PRESS.	X	
FUEL OIL NO. 2 TO ATOMIZING STEAM/AIR LOW DIFF. PRESS.	X	X
ATOMIZING STEAM/AIR LOW PRESSURE	X	X
ATOMIZING STEAM/AIR HIGH PRESSURE	X	X
FD FAN LOW AIR FLOW	X	X
FD FAN HIGH PRESSURE	X	
FD FAN FAILURE	X	X
FURNACE HIGH PRESSURE	X	X
FLAME FAILURE	X	X
BURNER GUN NOT IN POSITION (FUEL OIL ONLY)	X	X
INTERLOCK POWER FAILURE	X	X
CONTROL POWER FAILURE	X	X
BURNER VALVES NOT CLOSED	X	X
LAST INDIVIDUAL BURNER SAFETY SHUT-OFF CLOSED	X	X
MANUAL TRIP	X	X
COMBUSTION AIR SYSTEM FAILURE	X	X
PURGE AIR FLOW LOW	X	X
COMBUSTION AIR FLOW LOW	X	X
LOW FLUE GAS OXYGEN	X	X
LOW FIRE POSITION NOT ATTAINED PRIOR TO IGNITION CYCLE	X	X
FUEL SAFETY SHUT-OFF VALVES NOT CLOSED PRIOR TO IGNITION CYCLE	X	X
FALSE COMBUSTION AIR PURGE AIR FLOW LOW	X	X
BUILDING COMBUSTION AIR INTAKE LOUVER CLOSED (OR) MAKE-UP AIR VENTILATION SYSTEM NOT OPERATING	X	X

VA TESTING CRITERIA FOR THE DEVICES

1. THE DEVICE SHALL MEETS ALL VA REQUIREMENTS AND STANDARDS.
2. COORDINATE THE PROPOSED DEVICE LOCATION WITH VA MEDICAL CENTER.
3. THE DEVICE SHALL SET UP TO ACCOMMODATE TESTING.
4. ANY VALVE ISOLATING THE DEVICE IS LOCKABLE ONLY IN OPEN POSITION.
5. IF THE DEVICE IS A SWITCH, IT MUST OPEN WHEN IT ACTUATES.
6. ANY SIGNAL USED IN PROCESS CONTROL CANNOT BE USED AS AN INPUT TO A SAFETY SYSTEM.
7. INDEPENDENT SAFETY CONTROL INCLUDES THE FACT THAT THE SAFETY CONTROL MUST BE LOCATED IN AN ENCLOSURE THAT CONTAINS NO OTHER TYPE OF CONTROL.
8. ANY SHUNT ON LOW WATER CUTOFFS (BYPASS SWITCH) MUST BE A NON-LATCHING DEVICE. NO OTHER SHUNTS ARE ALLOWED.
9. THE USE OF A SNUBBER, DAMPENER, PNEUMATIC ACCUMULATOR OR OTHER SUCH DEVICE TO DAMPEN THE PRESSURE PROVIDED TO A SAFETY SWITCH OR GAGE USED IN TESTING THE SWITCH IS NOT VA COMPLIANT.
10. PROVIDE SAFETY DEVICE TEST REPORT CERTIFICATION REPORT FOR VA/COR REVIEW.

BOILER BMS SCROLL DISPLAY

1	MASTER FUEL TRIP
2	FORCED DRAFT FAN FAILURE
3	LIMITS MADE
4	BURNER READY
5	PURGE READY
6	PURGE-IN-PROGRESS
7	PURGE COMPLETE
8	IGNITOR TRIAL IN PROGRESS
9	IGNITOR ON
10	IGNITOR OFF
11	IGNITOR TRIP
12	BURNER TRIAL IN PROGRESS
13	BURNER ON
14	BURNER OFF
15	BURNER TRIP

NOTES:

1. BOILER BMS SCROLL DISPLAY SHALL ALSO INDICATE FLAME INTENSITY

NOTES:

1. RECORDER NO. 1

   PEN NO. 1 - STEAM FLOW (PPH)
   PEN NO. 2 - NO. 2 FUEL OIL FLOW (GPM)
   PEN NO. 3 - GAS FLOW (SCFH)
   PEN NO. 4 - FEEDWATER FLOW (PPH)

   BOILER CONTROL PANEL RECORDING DEVICES:

2. ALARM ANNUNCIATOR ITEMS NOTED AS "SPARE" SHALL BE PROVIDED. NO CONNECTION TO FIELD DEVICE IS REQUIRED.
3. PANELS SHALL BE THIRTY INCHES (30") DEEP WITH FRONT AND REAR HINGED ENTRY DOORS.
4. CONTRACTOR SHALL INTERLOCK H.O.A. SWITCH WITH MOTOR CONTROL CENTER.
5. ECONOMIZER DATA FOR BOILER NO 3 FROM ECONOMIZER.
6. ALL DRAFT GAUGES SHALL BE ELECTRONIC FLUSH PANEL MOUNTED.

BOILER CONTROL PANEL NOTE:

PROVIDE BOILER WITH FIREYE NEXUS PARALLEL POSITIONING SYSTEM WHICH SHALL BE UL LISTED AND FM APPROVED MEETING ALL OF THE VA REQUIREMENTS. COMPLETE AND FULLY FUNCTIONING CONTROL SYSTEM SHALL INCLUDE;

1. NEXUS PPC6000 INTEGRATED BURNER CONTROLLER SYSTEM CAPABLE FOR PARALLEL POSITIONING, BOILER LEVEL CONTROL AND O2 TRIM.
2. FIREYE NEXUS NXTSD104 10" TOUCHSCREEN
3. FIREYE BURNER LOGIX YB110UVSC BURNER MANAGER
4. FIREYE BURNER LOGIX YZ300 INTERLOCK ANNUNCIATOR
5. FIREYE PXMS200 STEAM TRANSMITTER
6. FIREYE 45UV5 SELF CHECK UV SCANNER
7. GAS SERVO AND VALVE
8. OIL SERVO
9. AIR SERVO
10. FIREYE NEXUS O2 TRIM SYSTEM
11. FIREYE NEXUS NXDBWLC BOILER LEVEL CONTROLLER
12. SIEMENS 7MF0340-DIP DP CELL OF LEVEL CONTROL

PROVIDE HMI WITH A 10" TOUCHSCREEN TO ENABLES THE MEDICAL CENTER TO TREND OPERATIONS, LOG FAULT HISTORY, AND TO VISUALLY MONITOR AS WELL AS OPERATE THE BOILER/BURNER CONTROLS. WITH UTILIZING A PRESSURE TRANSMITTER, THIS SYSTEM SHALL ENABLE PID CONTROL OF THE BURNER'S FIRING RATE. PROVIDE CONTROLS HAVING CAPABILITY TO FINE TUNE THE BURNER'S MODULATION, ELIMINATING HYSTERESIS AND BOILER CYCLING FOR BEST DRY STEAM PRODUCTION.

NOTE:

THE CONTRACTOR SHALL PROVIDE THE BMS SYSTEM, ACCESSORIES, FITTINGS, ETC. IN FULL COMPLIANCE WITH NFPA 85.

THE CONTRACTOR SHALL REFER TO SPECIFICATION #23 09 11 FOR BOILER ANNUNCIATOR PANEL ALARM REQUIREMENTS.

NO.	DESCRIPTION	DATE
	30% SUBMISSION	02-23-2022
	30% SUBMISSION (RESUBMISSION)	12-30-2022
	60% SUBMISSION	11-24-2023
	100% SUBMISSION	03-27-2024
	100%-2ND SUBMISSION	05-14-2024
	BID DOCUMENTS	05-20-2025

CONSULTANTS:

SEAL

AMBRISH K. RASTOGI REGISTERED 00193 STATE OF WEST VIRGINIA PROFESSIONAL ENGINEER

SIGNATURE:

ARCHITECT/ENGINEERS:

A DESIGN GROUP, LLC
ART - ARCHITECTURE - ENGINEERING
2787 HILL ROAD
VIENNA, VA 22181

FRANK V. STURGEON, AIA

AMBRISH RASTOGI, PE

703.938.5226
FRANK@ADG10.COM

Drawing Title: **CONTROLS**

Approved: Project Director

Project Title: **Replace Boiler #3**

Location: Clarksburg WV Medical Center

Date: 05/20/2025 | Checked: AR | Drawn: AM

Project Number: **540-22-103**

Building Number: NO. 1

Drawing Number: **MI102**

Dwg. 16 of 25

Office of Construction and Facilities Management

Department of Veterans Affairs

VA FORM 08-6231

IF THIS SHEET IS NOT 30" X42" FULL SIZE, USE GRAPHIC SCALE:

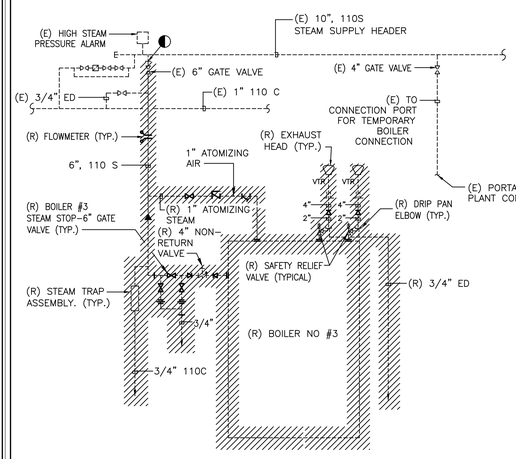

SCHEMATIC PIPING DIAGRAM–DEMOLITION WORK

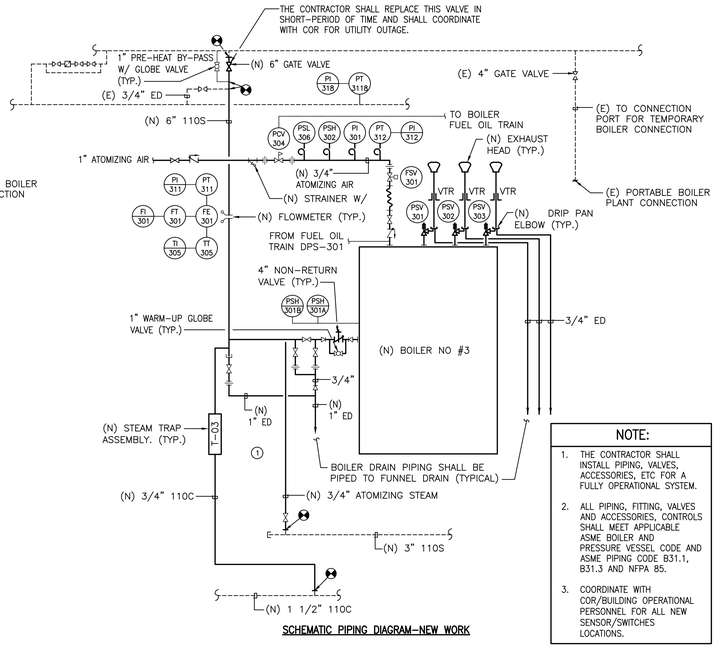

SCHEMATIC PIPING DIAGRAM–NEW WORK

NOTE:

1. THE CONTRACTOR SHALL INSTALL PIPING, VALVES, ACCESSORIES, ETC FOR A FULLY OPERATIONAL SYSTEM.
2. ALL PIPING, FITTING, VALVES AND ACCESSORIES, CONTROLS SHALL MEET APPLICABLE ASME BOILER AND PRESSURE VESSEL CODE AND ASME PIPING CODE B31.1, B31.3 AND NFPA 85.
3. COORDINATE WITH COR/BUILDING OPERATIONAL PERSONNEL FOR ALL NEW SENSOR/SWITCHES LOCATIONS.

1 MR101 PARTIAL STEAM SYSTEM SCHEMATIC DIAGRAM

NOT TO SCALE

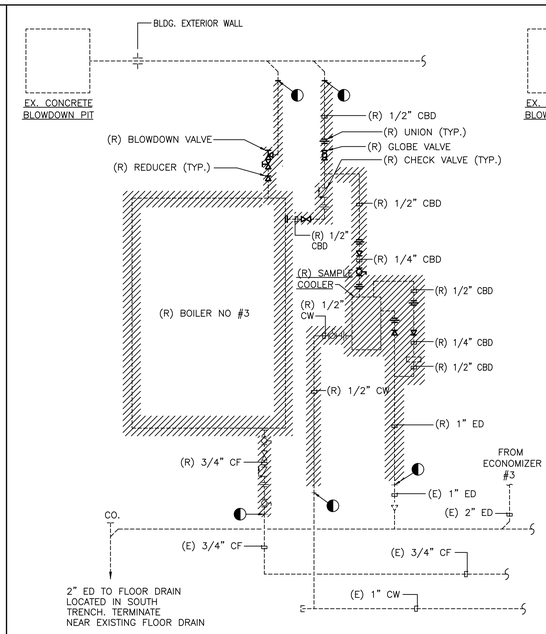

SCHEMATIC PIPING DIAGRAM–DEMOLITION WORK

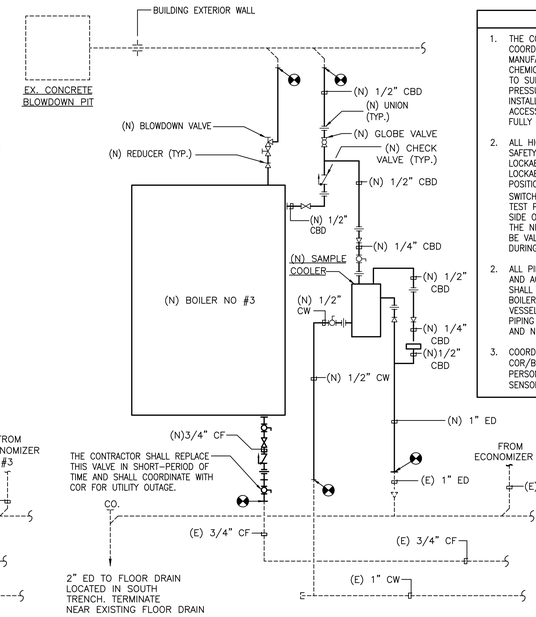

SCHEMATIC PIPING DIAGRAM–NEW WORK

NOTE:

1. THE CONTRACTOR SHALL COORDINATE WITH BOILER MANUFACTURER FOR PROPER CHEMICAL FEED PIPES SIZING TO SUIT FLOW AND AVAILABLE PRESSURE REQUIREMENTS. INSTALL PIPING, VALVES, ACCESSORIES, ETC FOR A FULLY OPERATIONAL SYSTEM.
2. ALL HIGH AND LOW PRESSURE SAFETY SWITCHES SHALL HAVE LOCKABLE ISOLATION VALVES, LOCKABLE IN THE OPERATING POSITION ONLY. THESE SWITCHES SHALL HAVE ¼" NPT TEST PORTS ON THE SWITCH SIDE OF THE ISOLATION VALVE. THE NPT TEST PORTS SHALL BE VALVED AND PLUGGED DURING NORMAL OPERATION.
2. ALL PIPING, FITTING, VALVES AND ACCESSORIES, CONTROLS SHALL MEET APPLICABLE ASME BOILER AND PRESSURE VESSEL CODE AND ASME PIPING CODE B31.1, B31.3 AND NFPA 85.
3. COORDINATE WITH COR/BUILDING OPERATIONAL PERSONNEL FOR ALL NEW SENSOR/SWITCHES LOCATIONS.

2 MR101 PARTIAL CHEMICAL FEED SYSTEM SCHEMATIC DIAGRAM

NOT TO SCALE

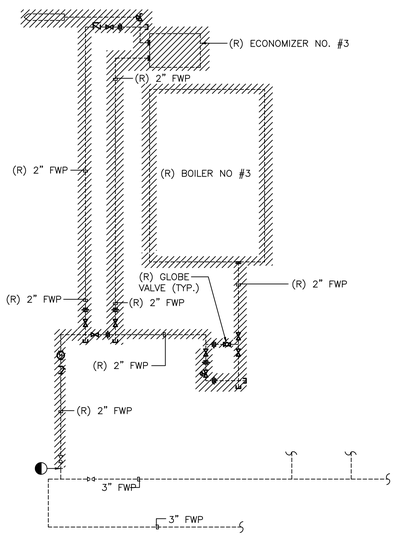

SCHEMATIC PIPING DIAGRAM–DEMOLITION WORK

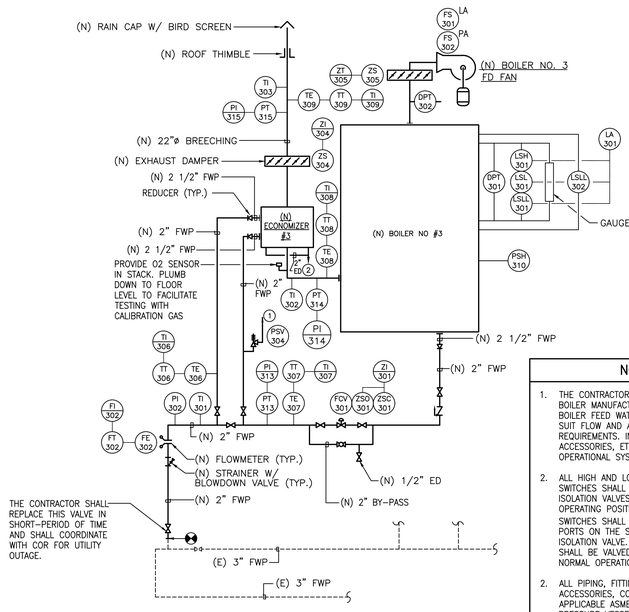

SCHEMATIC PIPING DIAGRAM–NEW WORK

NOTE:

1. THE CONTRACTOR SHALL COORDINATE WITH BOILER MANUFACTURER FOR PROPER BOILER FEED WATER PIPES SIZING TO SUIT FLOW AND AVAILABLE PRESSURE REQUIREMENTS. INSTALL PIPING, VALVES, ACCESSORIES, ETC FOR A FULLY OPERATIONAL SYSTEM.
2. ALL HIGH AND LOW PRESSURE SAFETY SWITCHES SHALL HAVE LOCKABLE ISOLATION VALVES, LOCKABLE IN THE OPERATING POSITION ONLY. THESE SWITCHES SHALL HAVE ¼" NPT TEST PORTS ON THE SWITCH SIDE OF THE ISOLATION VALVE. THE NPT TEST PORTS SHALL BE VALVED AND PLUGGED DURING NORMAL OPERATION.
2. ALL PIPING, FITTING, VALVES AND ACCESSORIES, CONTROLS SHALL MEET APPLICABLE ASME BOILER AND PRESSURE VESSEL CODE AND ASME PIPING CODE B31.1, B31.3 AND NFPA 85.
3. COORDINATE WITH COR/BUILDING OPERATIONAL PERSONNEL FOR ALL NEW SENSOR/SWITCHES LOCATIONS.

3 MR101 PARTIAL BOILER FEEDWATER SYSTEM SCHEMATIC DIAGRAM

NOT TO SCALE

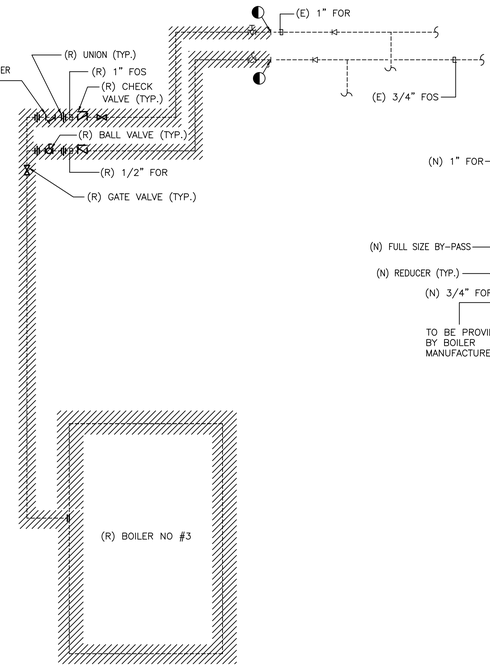

SCHEMATIC PIPING DIAGRAM–DEMOLITION WORK

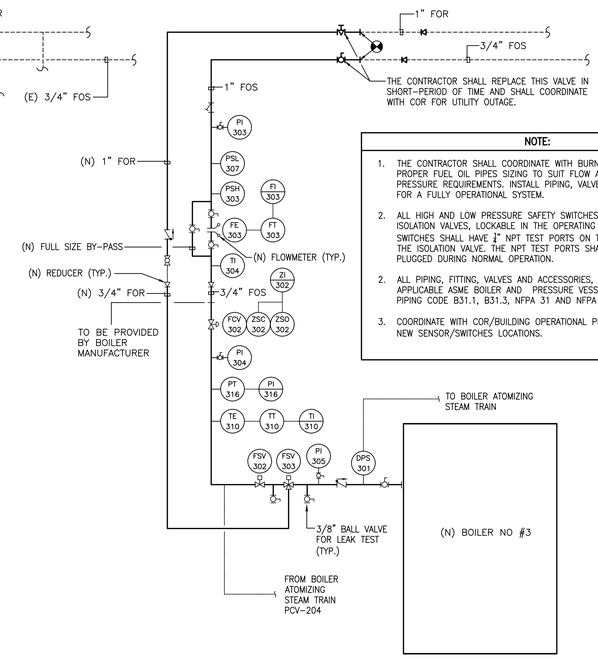

SCHEMATIC PIPING DIAGRAM–NEW WORK

NOTE:

1. THE CONTRACTOR SHALL COORDINATE WITH BURNER MANUFACTURER FOR PROPER FUEL OIL PIPES SIZING TO SUIT FLOW AND AVAILABLE PRESSURE REQUIREMENTS. INSTALL PIPING, VALVES, ACCESSORIES, ETC FOR A FULLY OPERATIONAL SYSTEM.
2. ALL HIGH AND LOW PRESSURE SAFETY SWITCHES SHALL HAVE LOCKABLE ISOLATION VALVES, LOCKABLE IN THE OPERATING POSITION ONLY. THESE SWITCHES SHALL HAVE ¼" NPT TEST PORTS ON THE SWITCH SIDE OF THE ISOLATION VALVE. THE NPT TEST PORTS SHALL BE VALVED AND PLUGGED DURING NORMAL OPERATION.
2. ALL PIPING, FITTING, VALVES AND ACCESSORIES, CONTROLS SHALL MEET APPLICABLE ASME BOILER AND PRESSURE VESSEL CODE AND ASME PIPING CODE B31.1, B31.3, NFPA 31 AND NFPA 85.
3. COORDINATE WITH COR/BUILDING OPERATIONAL PERSONNEL FOR ALL NEW SENSOR/SWITCHES LOCATIONS.

4 MR101 PARTIAL FUEL OIL SYSTEM SCHEMATIC DIAGRAM

NOT TO SCALE

NO.	DESCRIPTION	DATE
	30% SUBMISSION	02-23-2022
	30% SUBMISSION (RESUBMISSION)	12-30-2022
	60% SUBMISSION	11-24-2023
	100% SUBMISSION	03-27-2024
	100%-2ND SUBMISSION	05-14-2024
	BID DOCUMENTS	05-20-2025

CONSULTANTS:

SEAL: AMBRISH K. RASTOGI, REGISTERED PROFESSIONAL ENGINEER, 00193, STATE OF WEST VIRGINIA

SIGNATURE:

ARCHITECT/ENGINEERS:

A DESIGN GROUP, LLC
ART - ARCHITECTURE - ENGINEERING
2787 HILL ROAD
VIENNA, VA 22181

FRANK V. STURGEON, AIA

AMBRISH RASTOGI, PE

703.938.5226
FRANK@ADG10.COM

Drawing Title: **SCHEMATIC PIPING DIAGRAMS**

Approved: Project Director

Project Title: **Replace Boiler #3**

Location: Clarksburg WV Medical Center

Date: 05/20/2025 | Checked: AR | Drawn: AM

Project Number: **540-22-103**

Building Number: NO. 1

Drawing Number: **MR101**

Dwg. 17 of 25

Office of Construction and Facilities Management

Department of Veterans Affairs

VA FORM 08-6231

IF THIS SHEET IS NOT 30" X42" FULL SIZE, USE GRAPHIC SCALE:

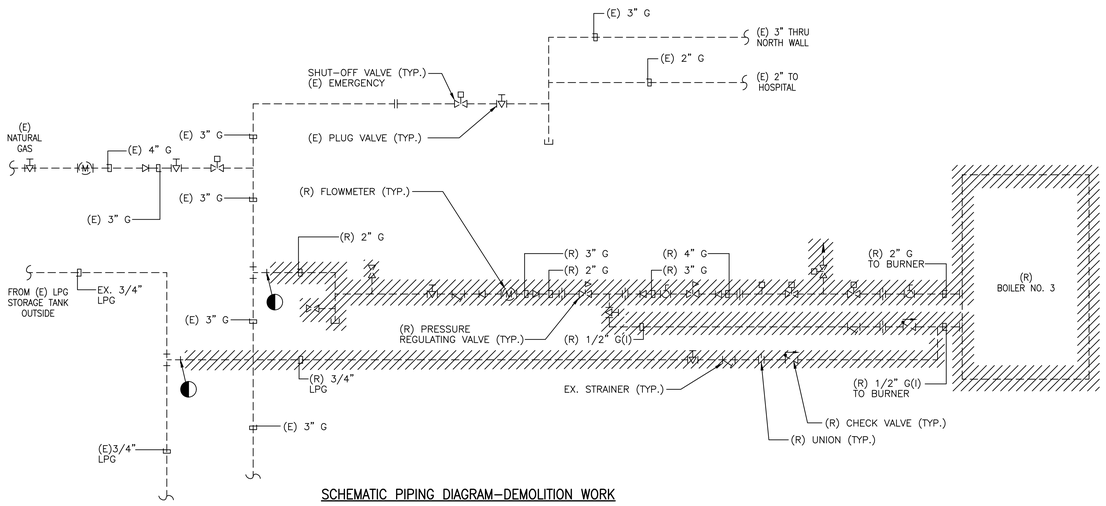

SCHEMATIC PIPING DIAGRAM–DEMOLITION WORK

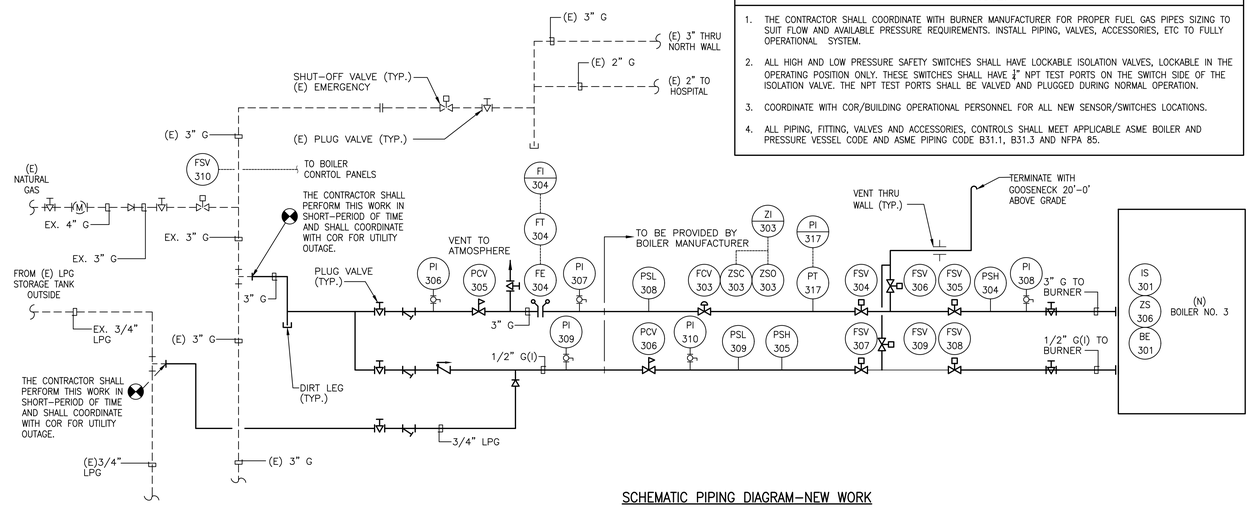

SCHEMATIC PIPING DIAGRAM–NEW WORK

NOTE:

1. THE CONTRACTOR SHALL COORDINATE WITH BURNER MANUFACTURER FOR PROPER FUEL GAS PIPES SIZING TO SUIT FLOW AND AVAILABLE PRESSURE REQUIREMENTS. INSTALL PIPING, VALVES, ACCESSORIES, ETC TO FULLY OPERATIONAL SYSTEM.
2. ALL HIGH AND LOW PRESSURE SAFETY SWITCHES SHALL HAVE LOCKABLE ISOLATION VALVES, LOCKABLE IN THE OPERATING POSITION ONLY. THESE SWITCHES SHALL HAVE ¼" NPT TEST PORTS ON THE SWITCH SIDE OF THE ISOLATION VALVE. THE NPT TEST PORTS SHALL BE VALVED AND PLUGGED DURING NORMAL OPERATION.
3. COORDINATE WITH COR/BUILDING OPERATIONAL PERSONNEL FOR ALL NEW SENSOR/SWITCHES LOCATIONS.
4. ALL PIPING, FITTING, VALVES AND ACCESSORIES, CONTROLS SHALL MEET APPLICABLE ASME BOILER AND PRESSURE VESSEL CODE AND ASME PIPING CODE B31.1, B31.3 AND NFPA 85.

1 / MR102 **PARTIAL NATURAL GAS SYSTEM SCHEMATIC DIAGRAM**

NOT TO SCALE

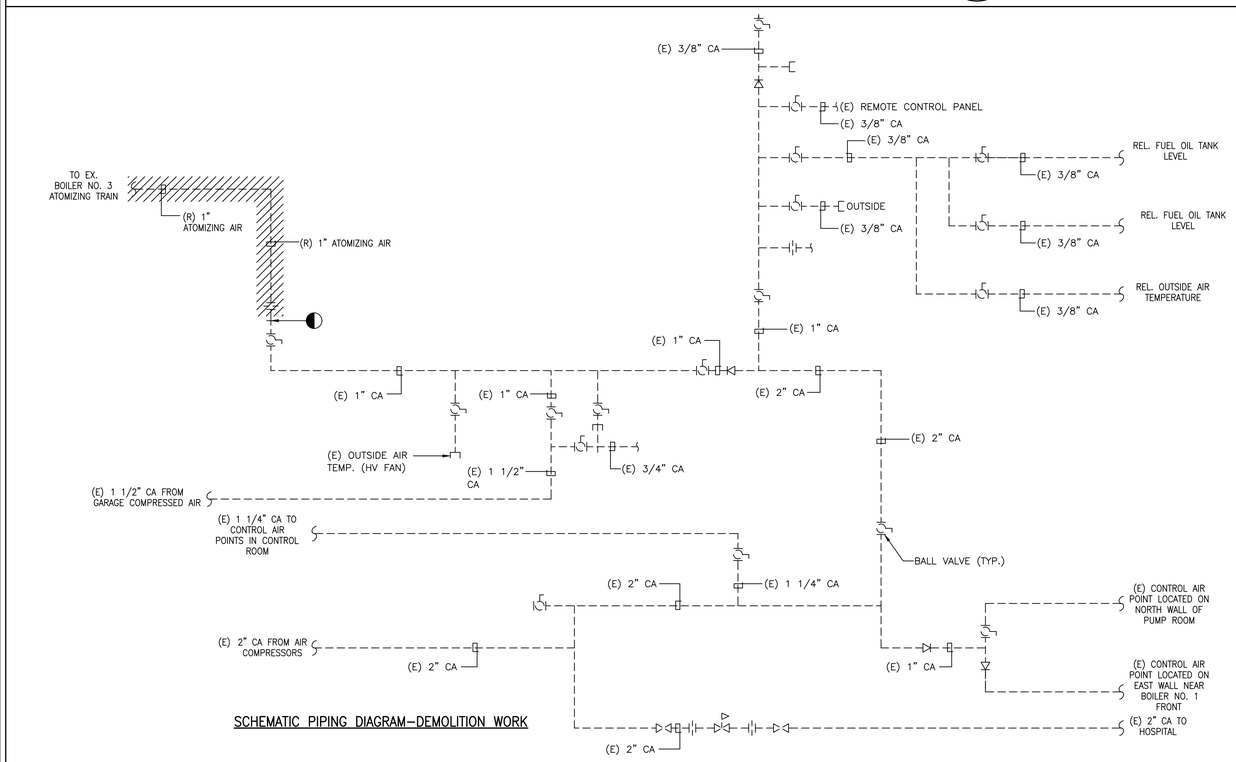

SCHEMATIC PIPING DIAGRAM–DEMOLITION WORK

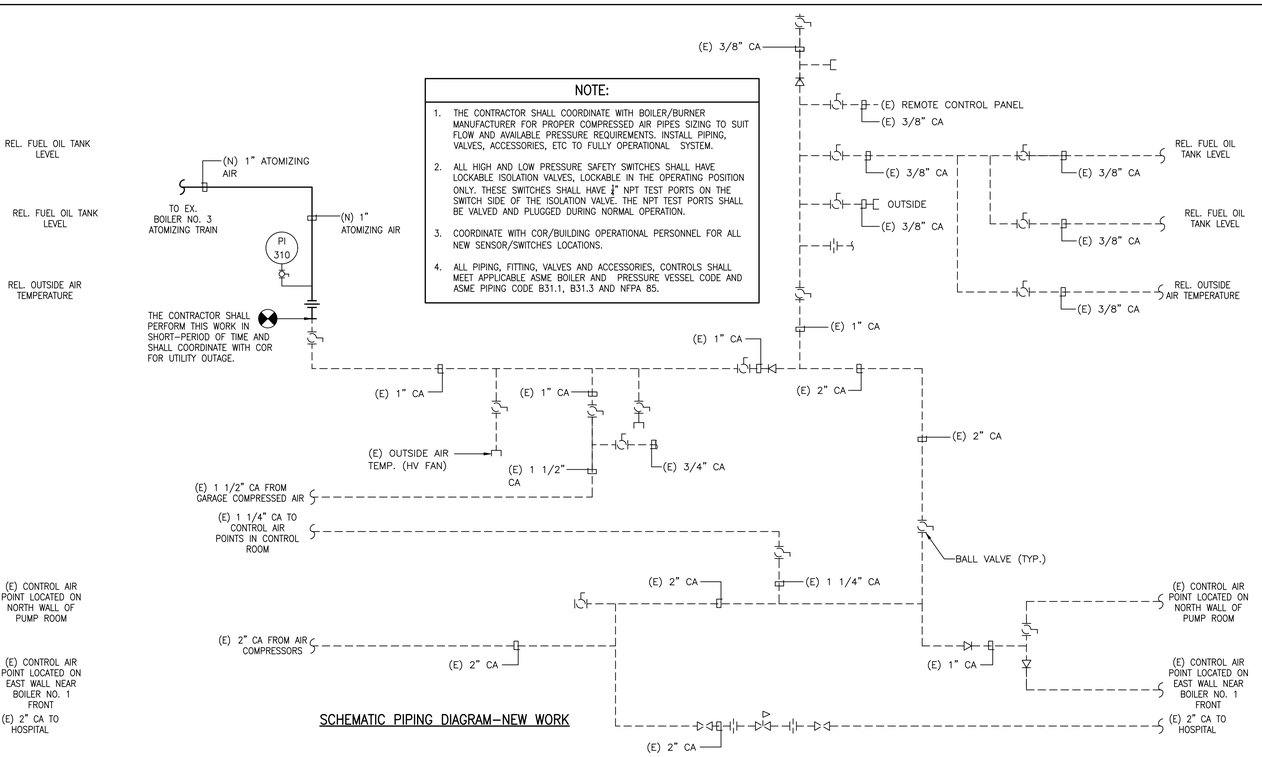

SCHEMATIC PIPING DIAGRAM–NEW WORK

NOTE:

1. THE CONTRACTOR SHALL COORDINATE WITH BOILER/BURNER MANUFACTURER FOR PROPER COMPRESSED AIR PIPES SIZING TO SUIT FLOW AND AVAILABLE PRESSURE REQUIREMENTS. INSTALL PIPING, VALVES, ACCESSORIES, ETC TO FULLY OPERATIONAL SYSTEM.
2. ALL HIGH AND LOW PRESSURE SAFETY SWITCHES SHALL HAVE LOCKABLE ISOLATION VALVES, LOCKABLE IN THE OPERATING POSITION ONLY. THESE SWITCHES SHALL HAVE ¼" NPT TEST PORTS ON THE SWITCH SIDE OF THE ISOLATION VALVE. THE NPT TEST PORTS SHALL BE VALVED AND PLUGGED DURING NORMAL OPERATION.
3. COORDINATE WITH COR/BUILDING OPERATIONAL PERSONNEL FOR ALL NEW SENSOR/SWITCHES LOCATIONS.
4. ALL PIPING, FITTING, VALVES AND ACCESSORIES, CONTROLS SHALL MEET APPLICABLE ASME BOILER AND PRESSURE VESSEL CODE AND ASME PIPING CODE B31.1, B31.3 AND NFPA 85.

2 / MR102 **PARTIAL COMPRESSED AIR SYSTEM SCHEMATIC DIAGRAM**

NOT TO SCALE

NO.	DESCRIPTION	DATE
	30% SUBMISSION	02-23-2022
	30% SUBMISSION (RESUBMISSION)	12-30-2022
	60% SUBMISSION	11-24-2023
	100% SUBMISSION	03-27-2024
	100%-2ND SUBMISSION	05-14-2024
	BID DOCUMENTS	05-20-2025

CONSULTANTS:

SEAL

AMBRISH K. RASTOGI REGISTERED 903193 STATE OF WEST VIRGINIA PROFESSIONAL ENGINEER

SIGNATURE:

ARCHITECT/ENGINEERS:

A DESIGN GROUP, LLC
ART - ARCHITECTURE - ENGINEERING
2787 HILL ROAD
VIENNA, VA 22181

FRANK V. STURGEON, AIA

AMBRISH RASTOGI, PE

703.938.5226
FRANK@ADG10.COM

Drawing Title: **SCHEMATIC PIPING DIAGRAMS**

Approved: Project Director

Project Title: **Replace Boiler #3**

Location: Clarksburg WV Medical Center

Date: 05/20/2025 | Checked: AR | Drawn: AM

Project Number: **540-22-103**

Building Number: NO. 1

Drawing Number: **MR102**

Dwg. 18 of 25

Office of Construction and Facilities Management

Department of Veterans Affairs

VA FORM 08-6231

IF THIS SHEET IS NOT 30" X42" FULL SIZE, USE GRAPHIC SCALE:

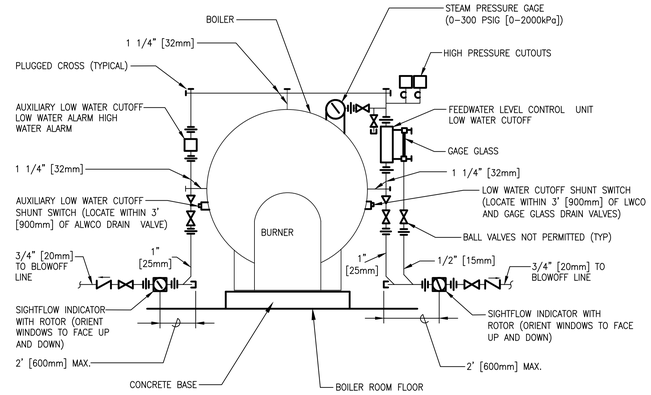

ELEVATION

1 MK101 FIRE TUBE BOILER

NOT TO SCALE

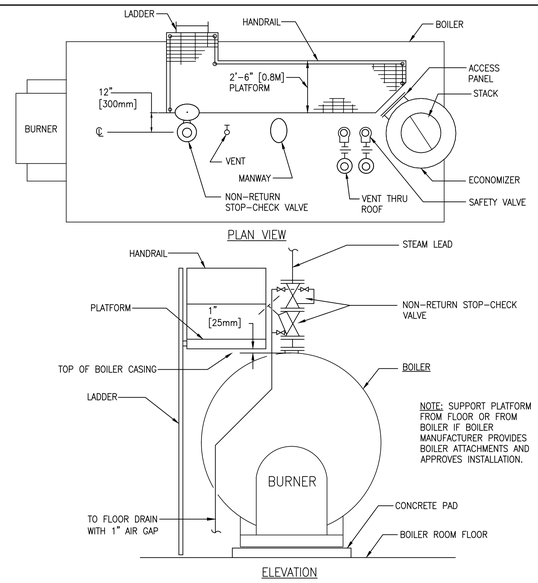

NOTE: SUPPORT PLATFORM FROM FLOOR OR FROM BOILER IF BOILER MANUFACTURER PROVIDES BOILER ATTACHMENTS AND APPROVES INSTALLATION.

ELEVATION

2 MK101 ACCESS PLATFORM ARRANGEMENT DETAIL

NOT TO SCALE

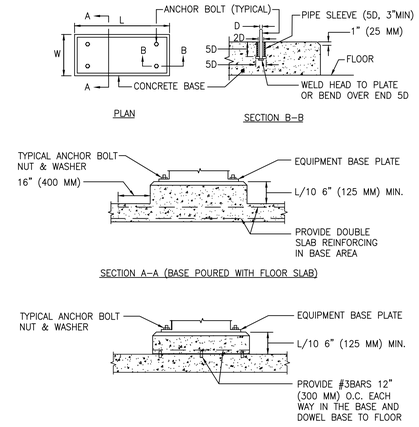

NOTES:

1. L AND W DIMENSIONS SHALL BE 6 IN. (150 MM) GREATER THAN THE EQUIPMENT BASE PLATE.

3 MK101 CONCRETE EQUIPMENT BASES DETAIL

NOT TO SCALE

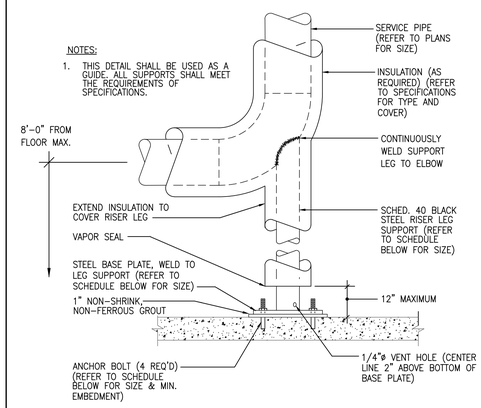

NOTES:

1. THIS DETAIL SHALL BE USED AS A GUIDE. ALL SUPPORTS SHALL MEET THE REQUIREMENTS OF SPECIFICATIONS.

PIPE SIZE	RISER LEG SUPPORT	BASE PLATE	ANCHOR BOLTS	MIN. EMBEDMENT
12"ø	6"ø	12"x12"x3/8"	5/8"øx8" LONG	4"
10"ø	4"ø	10"x10"x3/8"	5/8"øx8" LONG	4"
8"ø	3"ø	8"x8"x3/8"	1/2"øx8" LONG	4"
6"ø	3"ø	8"x8"x3/8"	1/2"øx8" LONG	4"
5"ø	3"ø	8"x8"x3/8"	1/2"øx6" LONG	3"
4"ø	3"ø	8"x8"x3/8"	1/2"øx6" LONG	3"
3"ø	2"ø	8"x8"x3/8"	1/2"øx6" LONG	3"

4 MK101 TYPICAL INSULATED PIPE RISER FLOOR SUPPORT DETAIL

NOT TO SCALE

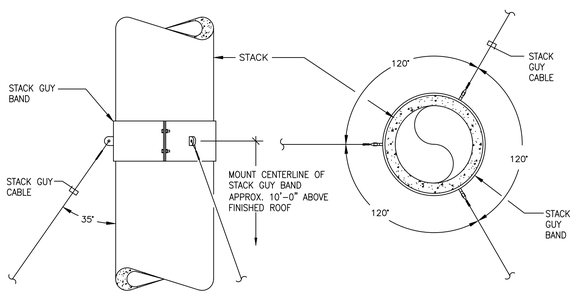

5 MK101 STACK GUYING DETAIL

NOT TO SCALE

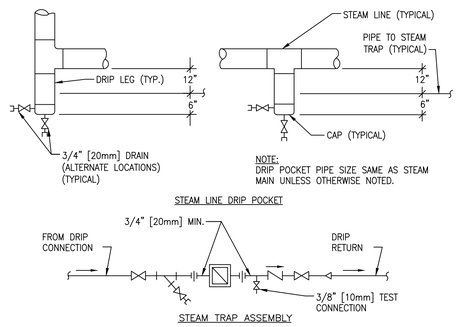

6 MK101 STEAM LINE DRIP POCKET AND STEAM TRAP ASSEMBLY DETAIL

NOT TO SCALE

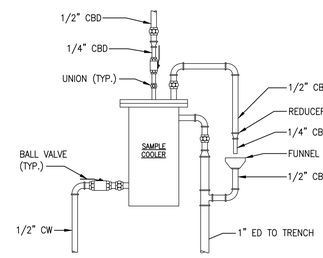

7 MK101 SAMPLE COOLER DETAIL

NOT TO SCALE

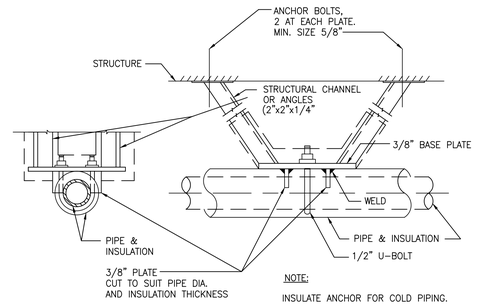

NOTE:

INSULATE ANCHOR FOR COLD PIPING.

8 MK101 HORIZONTAL PIPE ANCHOR DETAIL

NOT TO SCALE

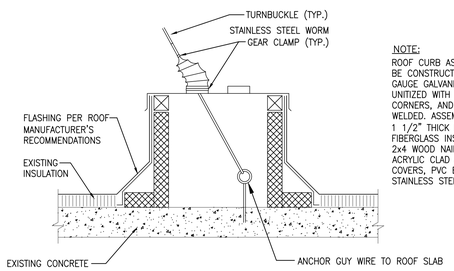

NOTE:

ROOF CURB ASSEMBLY SHALL BE CONSTRUCTED OF HEAVY GAUGE GALVANIZED STEEL, UNITIZED WITH FULL MITERED CORNERS, AND ALL SEAMS WELDED. ASSEMBLY SHALL HAVE 1 1/2" THICK RIGID FIBERGLASS INSULATION AND 2x4 WOOD NAILER STRIP WITH ACRYLIC CLAD ABS PLASTIC COVERS, PVC BOOT AND STAINLESS STEEL CLAMPS.

9 MK101 GUY WIRE ROOF CURB

NOT TO SCALE

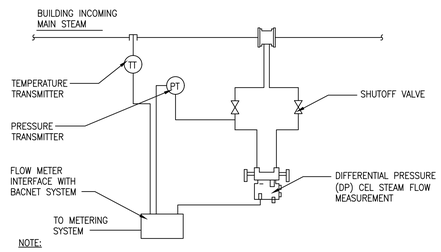

NOTE:

1. MAINTAIN UPSTREAM AND DOWN STREAM DISTANCES RECOMMENDED BY METER MANUFACTURES

10 MK101 STEAM METER DETAIL

NOT TO SCALE

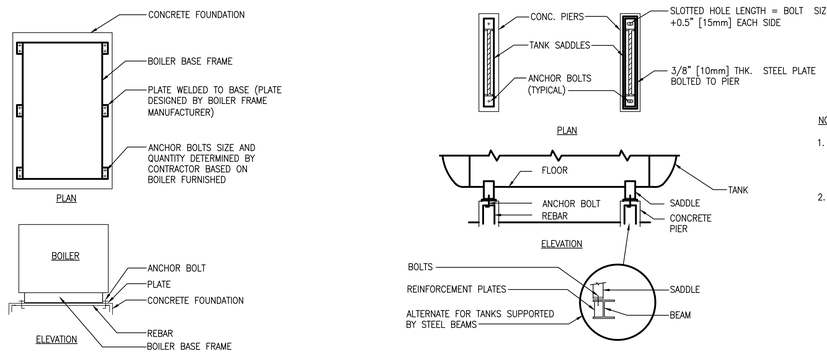

NOTES:

1. INSTALL THE BOILER'S SUPPORT IN FULL COMPLIANCE WITH MANUFACTURER'S RECOMMENDATIONS.
2. PROVIDE SLOTTED HOLES IN PLATES TO ALLOW THERMAL EXPANSION IF RECOMMENDED BY BOILER MANUFACTURER

11 MK101 EQUIPMENT ANCHORING-BOILER

NOT TO SCALE

NO.	DESCRIPTION	DATE
	30% SUBMISSION	02-23-2022
	30% SUBMISSION (RESUBMISSION)	12-30-2022
	60% SUBMISSION	11-24-2023
	100% SUBMISSION	03-27-2024
	100%-2ND SUBMISSION	05-14-2024
	BID DOCUMENTS	05-20-2025

CONSULTANTS:

SEAL

AMBRISH K. RASTOGI REGISTERED PROFESSIONAL ENGINEER 04193 STATE OF WEST VIRGINIA

SIGNATURE:

ARCHITECT/ENGINEERS:

A DESIGN GROUP, LLC
ART - ARCHITECTURE - ENGINEERING
2787 HILL ROAD
VIENNA, VA 22181

FRANK V. STURGEON, AIA

AMBRISH RASTOGI, PE

703.938.5226
FRANK@ADG10.COM

Drawing Title: **DETAILS**

Approved: Project Director

Project Title: **Replace Boiler #3**

Location: Clarksburg WV Medical Center

Date: 05/20/2025 | Checked: AR | Drawn: AM

Project Number: **540-22-103**

Building Number: NO. 1

Drawing Number: **MK101**

Dwg. 19 of 25

Office of Construction and Facilities Management

Department of Veterans Affairs

VA FORM 08-6231

IF THIS SHEET IS NOT 30" X42" FULL SIZE, USE GRAPHIC SCALE:

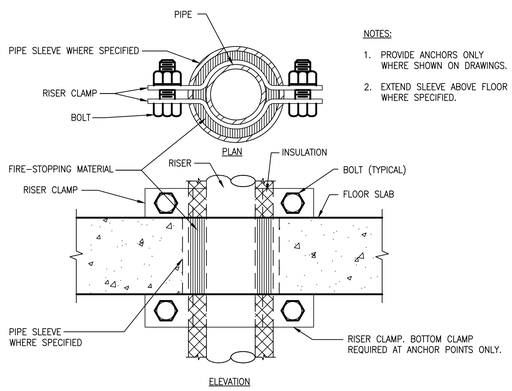

NOTES:

1. PROVIDE ANCHORS ONLY WHERE SHOWN ON DRAWINGS.
2. EXTEND SLEEVE ABOVE FLOOR WHERE SPECIFIED.

1 MK102 SUPPORT/ANCHOR FOR PIPE RISERS DETAIL

NOT TO SCALE

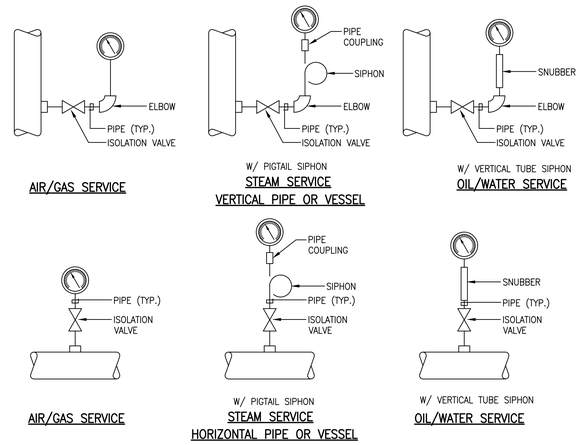

2 MK102 PRESSURE GAUGE INSTALLATION DETAIL

NOT TO SCALE

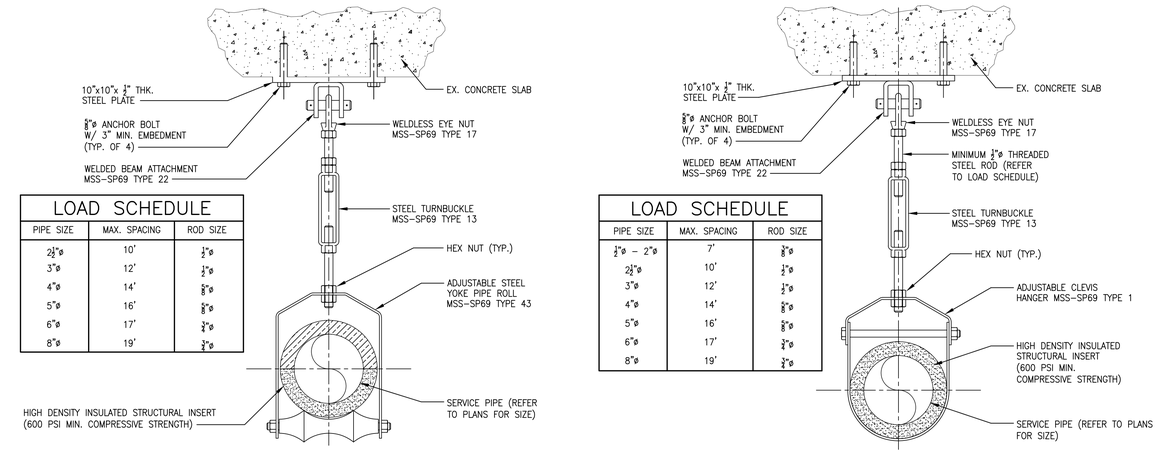

LOAD SCHEDULE

PIPE SIZE	MAX. SPACING	ROD SIZE
2½"ø	10'	½"ø
3"ø	12'	½"ø
4"ø	14'	⅝"ø
5"ø	16'	⅝"ø
6"ø	17'	¾"ø
8"ø	19'	¾"ø

LOAD SCHEDULE

PIPE SIZE	MAX. SPACING	ROD SIZE
1½"ø – 2"ø	7'	⅜"ø
2½"ø	10'	½"ø
3"ø	12'	½"ø
4"ø	14'	⅝"ø
5"ø	16'	⅝"ø
6"ø	17'	¾"ø
8"ø	19'	¾"ø

3 MK102 PIPE HANGER SUPPORT DETAIL

NOT TO SCALE

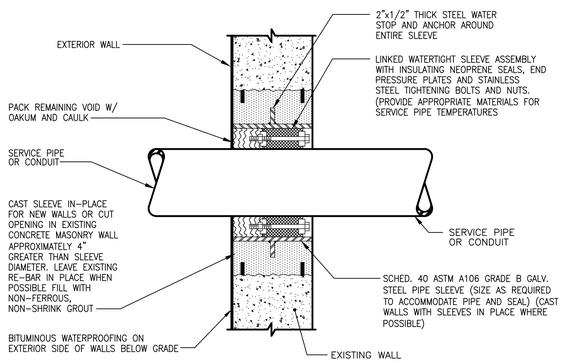

NOTE:

1. WHERE DRAWINGS INDICATE A WATERTIGHT SLEEVE, WATERTIGHT ASSEMBLY SHALL BE INSTALLED ON ACCESSIBLE SIDE OF SLEEVE INSTALLATION.
2. MASONRY WALLS TO BE DONE IN A SIMILAR MANNER.

4 MK102 WATERTIGHT SLEEVE ASSEMBLY DETAIL

NOT TO SCALE

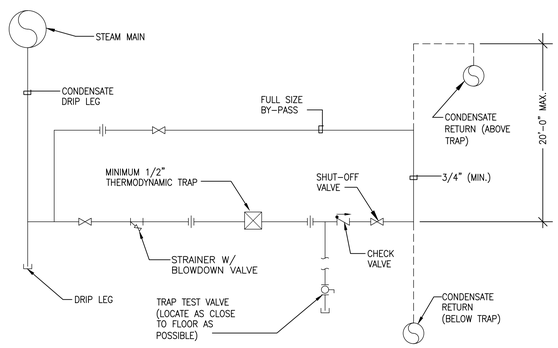

NOTE:

1. FULL SIZE DRIP LEG REQUIRED FOR PIPE SIZES.
2. PROVIDE STEAM TRAP ASSEMBLY AT ALL STEAM UTILIZING EQUIPMENT, LOW POINTS IN THE PIPING SYSTEM AND UPSTEAM OF STEAM ISOLATION VALVES.

5 MK102 STEAM TRAP ASSEMBLY

NOT TO SCALE

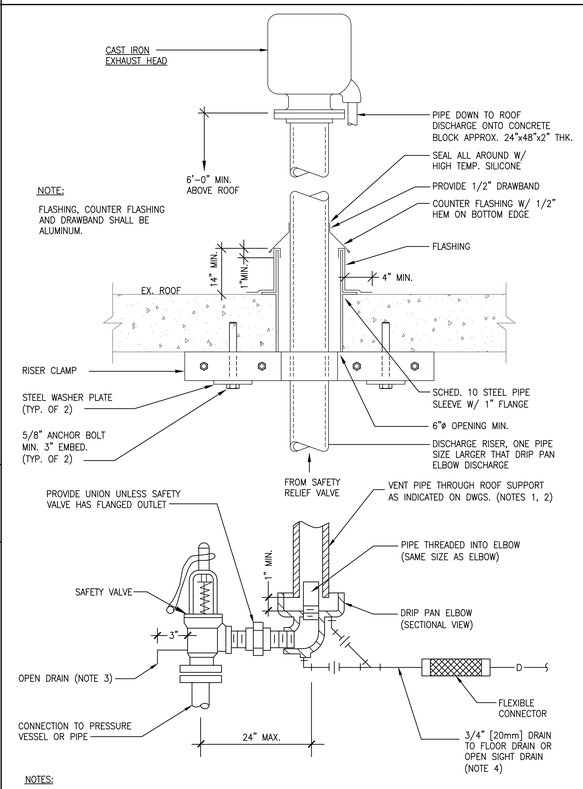

NOTES:

1. UNLESS OTHERWISE SHOWN ON THE DRAWINGS, SIZE THE VENT PIPE SO THAT STEAM IS NOT BLOWN OUT AT THE VENT PIPE ENTRANCE. UTILIZE THE CALCULATION METHOD CONTAINED IN ANSI B31.1. POWER PIPING CODE, APPENDIX II. THE CONTRACTOR SHALL COORDINATE WITH MANUFACTURER FOR PROPER SIZING AND INSTALLATION.
2. VENT PIPE SHALL TERMINATE 6' [1829mm] MIN. ABOVE FINISHED ROOF.
3. DISCHARGE OF DRAIN MUST BE DIRECTED AWAY FROM PLATFORMS OR OTHER AREAS WHICH PERSONNEL MAY OCCUPY.
4. DO NOT CONNECT ANY OTHER DRAIN TO THE DRIP PAN ELBOW DRAIN PIPE.

8 MK102 SAFETY RELIEF VALVE DETAIL

NOT TO SCALE

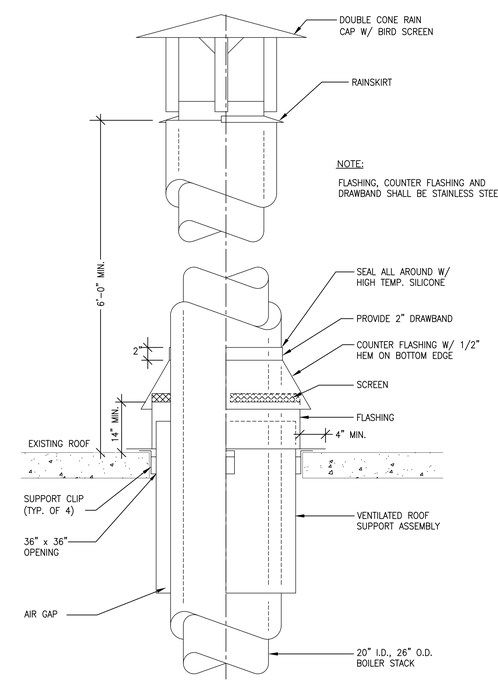

9 MK102 BOILER STACK ROOF PENETRATION DETAIL

NOT TO SCALE

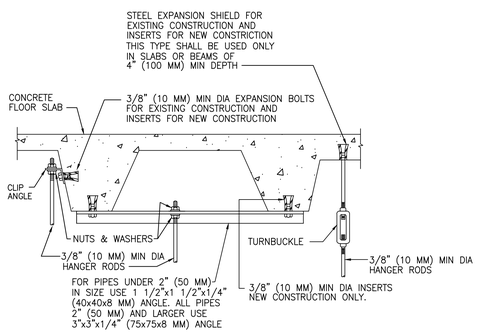

6 MK102 METHOD OF SECURING HANGER RODS IN CONCRETE SLABS AND BEAMS DETAIL

NOT TO SCALE

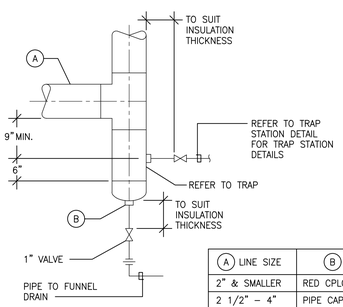

(A) LINE SIZE	(B) DRIP POCKET
2" & SMALLER	RED CPLG
2 1/2" – 4"	PIPE CAP w/1" HALF CPLG
6" – 10"	PIPE CAP w/1" HALF CPLG

7 MK102 DRIP LEG-DETAIL

NOT TO SCALE

NO.	DESCRIPTION	DATE
	30% SUBMISSION	02-23-2022
	30% SUBMISSION (RESUBMISSION)	12-30-2022
	60% SUBMISSION	11-24-2023
	100% SUBMISSION	03-27-2024
	100%-2ND SUBMISSION	05-14-2024
	BID DOCUMENTS	05-20-2025

CONSULTANTS:

SEAL

AMBRISH K. RASTOGI REGISTERED 06193 STATE OF WEST VIRGINIA PROFESSIONAL ENGINEER

SIGNATURE:

ARCHITECT/ENGINEERS:

A DESIGN GROUP, LLC
ART - ARCHITECTURE - ENGINEERING
2787 HILL ROAD
VIENNA, VA 22181

FRANK V. STURGEON, AIA

AMBRISH RASTOGI, PE

703.938.5226
FRANK@ADG10.COM

Drawing Title: **DETAILS**

Approved: Project Director

Project Title: **Replace Boiler #3**

Location: Clarksburg WV Medical Center

Date: 05/20/2025 | Checked: AR | Drawn: AM

Project Number: **540-22-103**

Building Number: NO. 1

Drawing Number: **MK102**

Dwg. 20 of 25

Office of Construction and Facilities Management

Department of Veterans Affairs

VA FORM 08-6231

IF THIS SHEET IS NOT 30" X42" FULL SIZE, USE GRAPHIC SCALE:

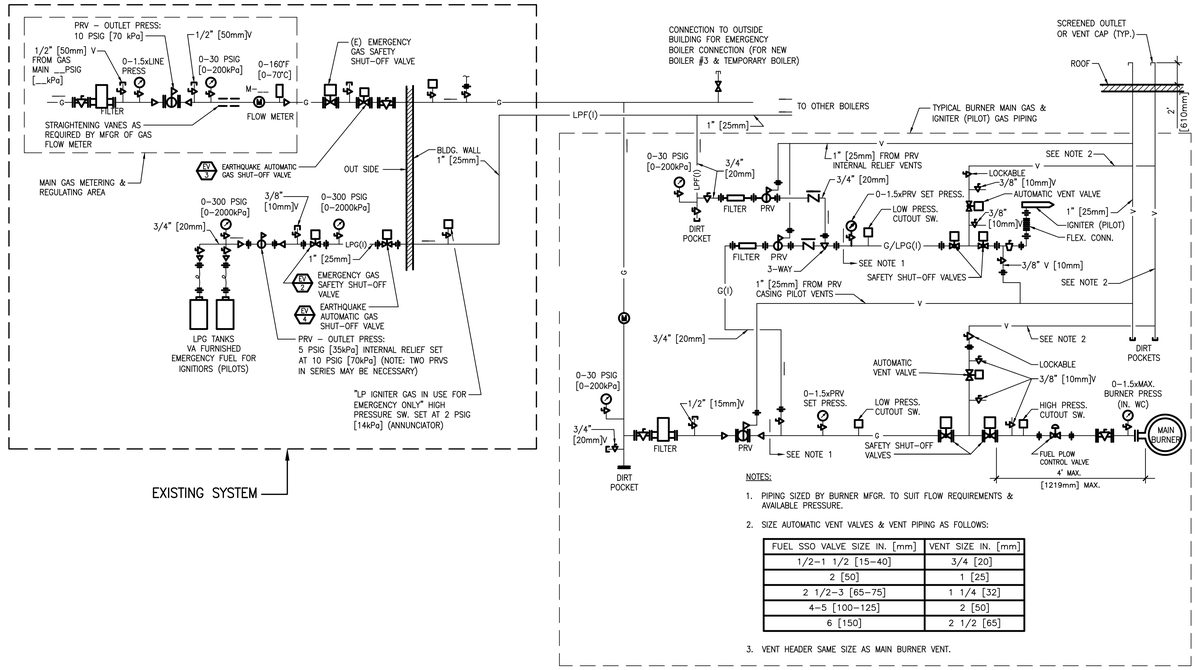

FUEL SSO VALVE SIZE IN. [mm]	VENT SIZE IN. [mm]
1/2–1 1/2 [15–40]	3/4 [20]
2 [50]	1 [25]
2 1/2–3 [65–75]	1 1/4 [32]
4–5 [100–125]	2 [50]
6 [150]	2 1/2 [65]

1 MR103 NATURAL GAS AND LIQUEFIED PETROLEUM GAS-BURNER AND IGNITER FUEL STANDARD PIPING DIAGRAM-DETAIL
NOT TO SCALE

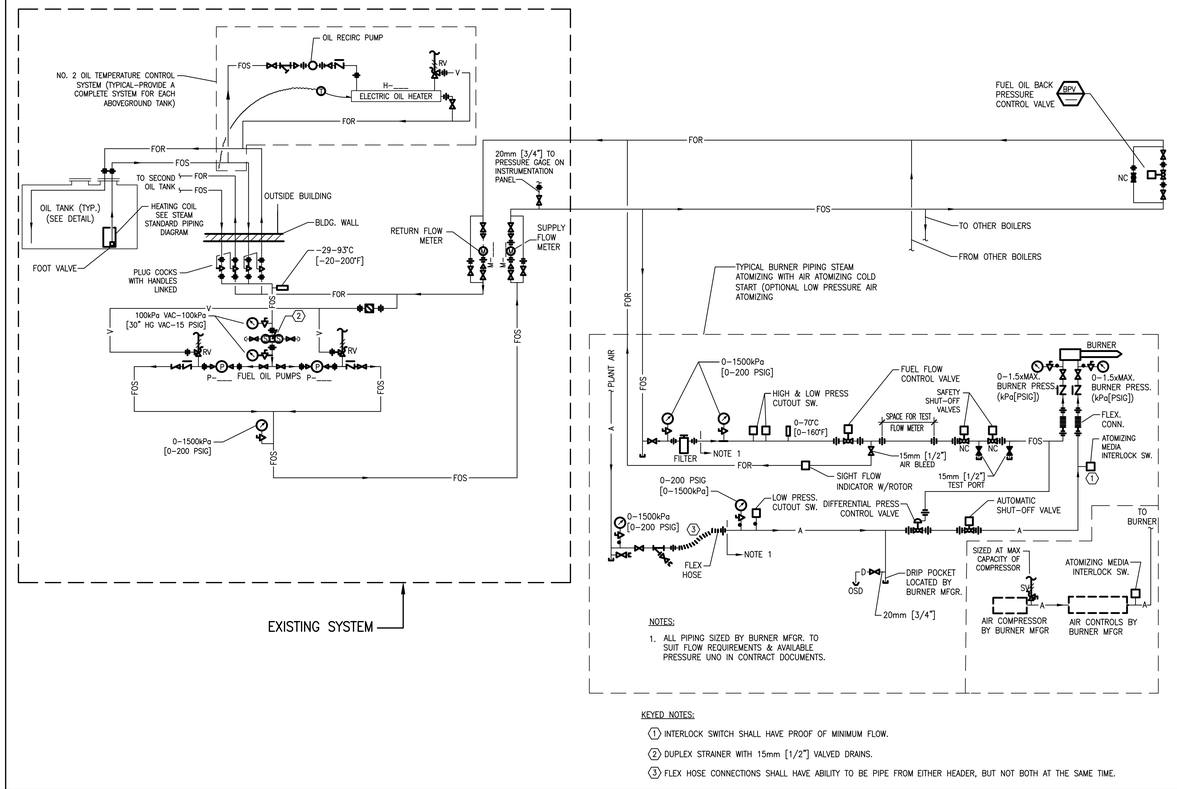

2 MR103 NO.2 BURNER FUEL OIL SYSTEMS-STANDARD PIPING DIAGRAM-DETAIL
NOT TO SCALE

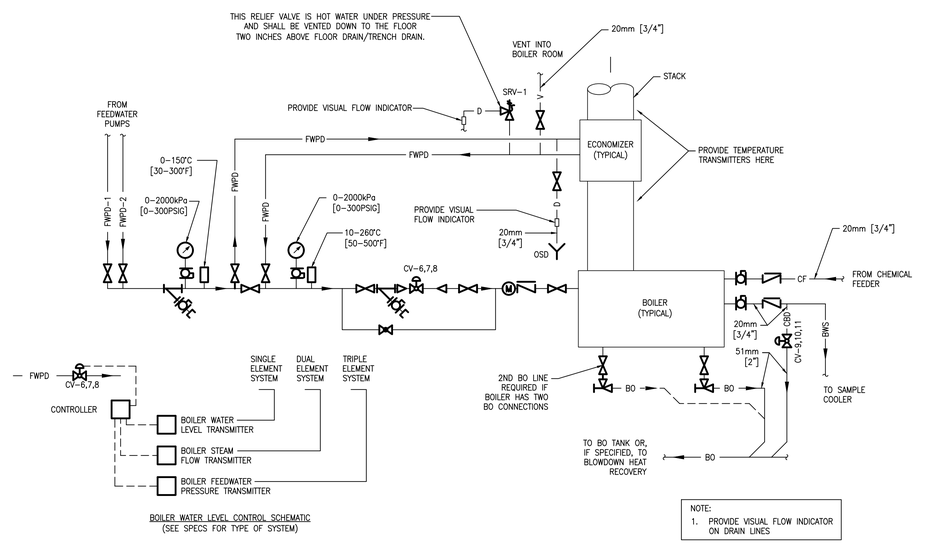

3 MR103 BOILER FLOW DIAGRAM-DETAIL
NOT TO SCALE

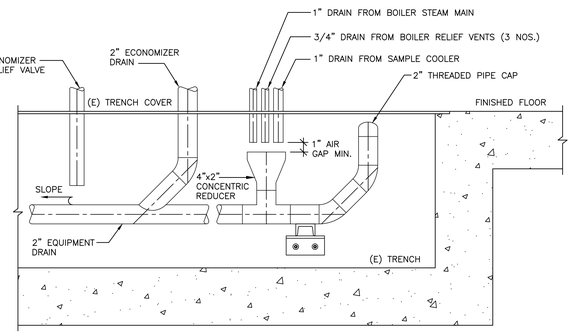

4 MR103 FUNNEL DRAIN AND MISCELLANEOUS CONNECTIONS DETAIL
NOT TO SCALE

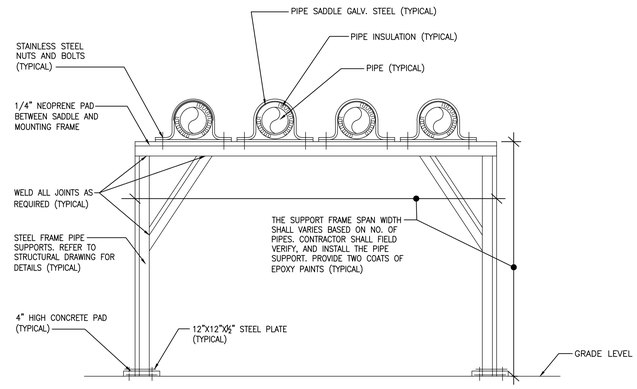

5 MR103 OUTDOOR PIPING (TEMPORARY PIPING + CONDUITS) SUPPORT DETAIL
NOT TO SCALE

NO.	DESCRIPTION	DATE
	30% SUBMISSION	02-23-2022
	30% SUBMISSION (RESUBMISSION)	12-30-2022
	60% SUBMISSION	11-24-2023
	100% SUBMISSION	03-27-2024
	100%-2ND SUBMISSION	05-14-2024
	BID DOCUMENTS	05-20-2025

CONSULTANTS:

SEAL: AMBRISH K. RASTOGI, REGISTERED, 00193, STATE OF WEST VIRGINIA, PROFESSIONAL ENGINEER
SIGNATURE:

ARCHITECT/ENGINEERS:
A DESIGN GROUP, LLC
ART - ARCHITECTURE - ENGINEERING
2787 HILL ROAD
VIENNA, VA 22181
FRANK V. STURGEON, AIA
AMBRISH RASTOGI, PE
703.938.5226
FRANK@ADG10.COM

Drawing Title: DETAILS
Approved: Project Director
Project Title: Replace Boiler #3
Location: Clarksburg WV Medical Center
Date: 05/20/2025 | Checked: AR | Drawn: AM
Project Number: 540-22-103
Building Number: NO. 1
Drawing Number: MK103
Dwg. 21 of 25
Office of Construction and Facilities Management
Department of Veterans Affairs

VA FORM 08-6231

IF THIS SHEET IS NOT 30" X42" FULL SIZE, USE GRAPHIC SCALE

ELECTRICAL NOTES

1. IT IS THE INTENT OF THESE DRAWINGS AND OTHER RELATED DOCUMENTS TO PRODUCE A COMPLETE AND FUNCTIONING ELECTRICAL SYSTEM. THE ELECTRICAL CONTRACTOR SHALL PROVIDE ALL LABOR, MATERIALS, TESTS, AND OTHER SERVICES AS MAY BE NECESSARY TO ACHIEVE THIS PRODUCT. THE CONTRACTOR SHALL ACKNOWLEDGE ACCEPTANCE OF THE PLANS AS AN ADEQUATE DEFINITION OF THE SCOPE OF WORK AND EXTRA COST CLAIMS BASED ON DISCREPANCIES ON THE PLANS WILL NOT BE CONSIDERED.
2. ALL ELECTRICAL WORK SHALL BE IN ACCORDANCE WITH THE NATIONAL ELECTRICAL CODE (NEC) AND ALL LOCAL CODES HAVING JURISDICTION. ALL EQUIPMENT, DEVICES, AND MATERIAL SHALL BE LISTED WITH UNDERWRITERS LABORATORIES FOR ITS APPLICATION AS INSTALLED AND SHALL BEAR THE UL LABEL.
3. THE ELECTRICAL CONTRACTOR SHALL OBTAIN ALL PERMITS AND PAY SUCH FEES AS MAY BE NECESSARY FOR INSPECTIONS, TESTS, AND OTHER SERVICES WHICH ARE REQUIRED FOR THE COMPLETION OF HIS WORK.
4. THE CONTRACTOR SHALL VISIT THE SITE AND EXAMINE CONDITIONS OF THE PREMISES AND THE CHARACTER AND EXTENT OF WORK REQUIRED PRIOR TO SUBMISSION OF BIDS. ANY DIFFICULTIES IN COMPLYING WITH THE DRAWINGS AND SPECIFICATIONS SHALL BE BROUGHT TO THE ATTENTION OF ARCHITECT/ENGINEERS BEFORE BIDDING.
5. ELECTRICAL PLANS ARE DIAGRAMMATIC. DO NOT SCALE DRAWINGS.
6. CONSULT PLANS OF ALL OTHER TRADES FOR COORDINATION AND FOR RELATED AND ADJOINING WORK.
7. CONSULT ARCHITECTURAL AND STRUCTURAL PLANS AND DETAILS FOR CONSTRUCTION HEADROOM, ROOM FINISHES, CEILINGS, ETC.
8. SHOP DRAWINGS FOR ALL ELECTRICAL EQUIPMENT, FIXTURES, DEVICES AND MATERIALS SHALL BE SUBMITTED TO THE ARCHITECT FOR APPROVAL BEFORE DELIVERY TO THE JOB SITE. EQUIPMENT, FIXTURES, DEVICES, AND MATERIAL DELIVERED TO THE JOB SITE OR INSTALLED PRIOR TO APPROVAL OF THE SHOP DRAWINGS, AND FOR WHICH THE SHOP DRAWINGS ARE SUBSEQUENTLY REJECTED, SHALL BE REPLACED WITH AN APPROVED ITEM AT NO ADDITIONAL COST TO THE COR.
9. CONTRACTOR SHALL VERIFY WIRE SIZES, C/B AND FUSE RATINGS FOR ALL HVAC EQUIPMENT, AND BRING TO THE ATTENTION OF THE ARCHITECT/ENGINEERS ANY DISCREPANCIES AFFECTING THE WORK PRIOR TO PROCEEDING.
10. ALL WORK SHALL BE DONE AT SUCH TIMES AND IN SUCH A MANNER AS WILL LEAST INTERFERE WITH THE MAINTENANCE AND OPERATION OF ALL RELATED OR AFFECTED SYSTEMS. ALL POWER OUTAGES, FIRE ALARM SHUT DOWNS, ETC SHALL BE COORDINATED WITH COR.
11. CONTRACTOR SHALL BE RESPONSIBLE FOR PROPER SIZING OF ALL MOTOR OVERLOAD DEVICES (HEATERS) IN STARTERS BASED ON ACTUAL NAMEPLATE RATINGS ON THE EQUIPMENT BEING INSTALLED.
12. HORSEPOWER RATINGS INDICATED ON DRAWINGS MAY DIFFER FROM ACTUAL EQUIPMENT FURNISHED. IF FURNISHED EQUIPMENT DIFFERS FROM RATINGS ON DRAWINGS, CONTRACTOR SHALL NOTIFY ARCHITECT/ENGINEER FOR APPROPRIATE ACTION TO BE TAKEN.
13. CONTRACTOR SHALL NOTE U.L. LABELS ON PACKAGED TYPE MECHANICAL EQUIPMENT. IF U.L. LABEL ON MECHANICAL EQUIPMENT TO ACTUALLY BE INSTALLED CALLS FOR THE OVER CURRENT PROTECTIVE DEVICE TO BE FUSES, THE ELECTRICAL CONTRACTOR SHALL PROVIDE A FUSED DISCONNECT SWITCH WITH PROPER SIZE FUSES AT THE SWITCH LOCATION INDICATED ON DRAWINGS AT NO ADDITIONAL CHARGE TO THE COR.
14. THE CORRECT NUMBER OF WIRES MAY NOT BE INDICATED FOR ALL CIRCUITS, ONLY THOSE WHERE CLARIFICATION IS NECESSARY. THE ELECTRICAL CONTRACTOR SHALL PROVIDE ALL WIRES NECESSARY FOR THE PROPER FUNCTION OF THE SYSTEM WHETHER INDICATED ON THE DRAWINGS OR NOT.
15. ALL EMPTY CONDUIT RUNS IN EXCESS OF 10 FT. SHALL BE PROVIDED WITH A PULL WIRE OF FISH TAPE/CORD.
16. ALL CONDUCTORS, RACEWAYS AND CABLES SHALL BE CONCEALED IN CEILING OR WALL UNLESS INDICATED OTHERWISE.
17. OPENINGS IN EXISTING BUILDING STRUCTURE FOR PASSAGE OF CONDUITS/CABLES SHALL NOT BE CUT UNTIL THE CONTRACTOR HAS ASKED FOR AND RECEIVED WRITTEN APPROVAL FROM THE ARCHITECT.
18. SYMBOLS SHOWN ON THIS SHEET ARE STANDARD SYMBOLS AND MAY NOT NECESSARILY ALL BE APPLICABLE TO THIS PROJECT.
19. THE CONTRACTOR SHALL GUARANTEE ALL HIS WORK AND MATERIALS FOR A PERIOD OF ONE YEAR AFTER ACCEPTANCE BY OWNER.
20. ALL PENETRATIONS OF FLOOR AND WALLS SHALL BE FIRE STOPPED IN ACCORDANCE WITH IBC, NEC AND NFPA.
21. CONDUCTORS SHALL BE INSTALLED CONTINUOUS BETWEEN DEVICES, WITH SPLICES LOCATED ONLY IN JUNCTION BOXES OR IN CABINETS. CONDUCTORS SHALL BE OF SUFFICIENT LENGTH TO REACH THE FARTHEST TERMINAL IN PANELS. A MINIMUM OF 6" LOOPS SHALL REMAIN WHERE CONNECTIONS OR TAPS ARE TO BE MADE IN BRANCH CIRCUIT WIRING.
22. PROVIDE AN UPDATED TYPEWRITTEN PANEL DIRECTORY IN EACH PANEL AFTER COMPLETION OF WORK.
23. ELECTRICAL CONTRACTOR SHALL PROVIDE AS BUILT DRAWINGS AND ALL MANUFACTURERS DATA AND WARRANTY LITERATURE AT THE COMPLETION OF THE CONTRACT.
24. IF CEILING SPACE IS USED AS PLENUM, APPROPRIATE WIRING SHALL BE USED.
25. STARTERS SHALL BE PROVIDED BY THE MECHANICAL CONTRACTOR, AND INSTALLED BY ELECTRICAL CONTRACTOR AS PER MANUFACTURER'S RECOMMENDATION. COORDINATE EXACT LOCATIONS AND REQUIREMENTS.
26. UNIT EQUIPMENT SHALL COMPLY WITH NEC 700.12 (F).
27. (SHARED)" UNDER THIS CONTRACT IS DEFINED AS SPLIT CIRCUIT; CONTRACTOR SHALL SPLICE THE CIRCUIT AT THE SOURCE PANELBOARD AND RUN SEPARATE WIRING TO THE LOADS INDICATED

EQUIPMENT SPECIFICATIONS

1. RACEWAY:

A. MINIMUM SIZE OF THE CONDUIT SHALL BE 3/4".

B. PROVIDE FLEXIBLE CONDUIT FOR MOTOR CONNECTIONS, AND FOR OTHER ELECTRICAL EQUIPMENT CONDITIONS, WHERE SUBJECT TO MOVEMENT AND VIBRATION. 18" MAXIMUM LENGTH.

C. PROVIDE LIQUID TIGHT FLEXIBLE CONDUIT FOR CONNECTION OF MOTOR AND FOR OTHER ELECTRICAL EQUIPMENT WHERE SUBJECT TO MOVEMENT AND VIBRATION, AND ALSO WHERE SUBJECT TO ONE OR MORE OF THE FOLLOWING CONDITIONS, UNLESS NOTED OTHERWISE:

a. MOIST AND HUMID ATMOSPHERE WHERE CONDENSATE CAN BE EXPECTED TO ACCUMULATE.

b. CORROSIVE ATMOSPHERE.

c. SUBJECT TO DRIPPING OIL, GREASE OR WATER.

D. ALL CONDUITS SHALL BE GROUNDED PER NEC. CONDUITS ENTERING THE OUTLET BOXES, PANEL CABINETS ETC. MUST BE FITTED WITH A DOUBLE LOCKNUT AND BUSHING.

E. PROVIDE RIGID STEEL, THREADED, THICK WALL CONDUIT, GALVANIZED OR EMT FOR ALL PANEL FEEDERS, AND ALL EXPOSED WIRING IN UNFINISHED AREAS.

F. ALL WIRE RACEWAYS IN OR PASSING THROUGH CONCRETE WALLS, SLABS, OR UNDERGROUND SHALL BE GALVANIZED RIGID STEEL THREADED CONDUIT.

3. WIRES AND CABLES:

A. ALL WIRE AND CABLE SHALL BE COPPER WITH THHN/THWN INSULATION AND ALL WIRE SIZES ARE BASED ON COPPER CONDUCTORS WITH 75°C INSULATION UNLESS INDICATED OTHERWISE. ALL CONNECTORS, LUGS, ETC. SHALL BE LISTED FOR 75°C.

B. PROVIDE WIRING NOT SMALLER THAN #12 AWG FOR THE POWER DISTRIBUTION, AND NOT SMALLER THAN #14 AWG FOR THE FIRE ALARM SYSTEM. ARMORED METAL CABLE OR METAL CLAD CABLE, WHERE CONCEALED, MAY BE USED IF ACCEPTABLE TO THE LOCAL AUTHORITY HAVING JURISDICTION AND IN COMPLIANCE WITH APPLICABLE CODES.

C. ALL CIRCUITS 120/208 VOLT OVER 100 FEET AND ALL 277/480 VOLT CIRCUITS OVER 200 FEET FROM PANEL TO FIRST OUTLET SHALL HAVE CONDUCTORS ONE SIZE LARGER THAN NORMALLY REQUIRED WHETHER INDICATED ON PANEL SCHEDULE OR NOT.

D. CONDUCTORS INSTALLED UNDERGROUND OR IN THE WET LOCATIONS SHALL BE U.L. LISTED PER NEC, AND SHALL BE SUITABLE FOR WET LOCATIONS.

E. ALL BRANCH CIRCUIT WIRING SHALL BE PROVIDED WITH AN INSULATED GROUND CONDUCTOR FOR ANY DEVICE ACCESSIBLE BY A PATIENT AS PER NEC 517.13 (A) & (B).

4. ELECTRICAL BOXES AND FITTINGS:

A. ALL BOXES AND FITTINGS SHALL BE OF CODE–GAUGE STEEL.

B. JUNCTION AND PULL BOXES: PROVIDE GALVANIZED CODE–GAUGE SHEET STEEL JUNCTION AND PULL BOXES WITH SCREW–ON COVER OF TYPES, SHAPES AND SIZES TO SUIT EACH RESPECTIVE LOCATION AND INSTALLATION, WITH WELDED SEAMS AND EQUIPPED WITH STAINLESS STEEL NUTS, SCREWS, AND WASHERS.

C. PROVIDE WEATHERPROOF OUTLETS FOR INTERIOR AND EXTERIOR LOCATIONS EXPOSED TO WEATHER OR MOISTURE.

D. ALL PULL BOXES SHALL BE FABRICATED FROM #12 OR HEAVIER GAUGE GALVANIZED STEEL AS REQUIRED BY THE NEC, AND SHALL BE EQUIPPED WITH SCREW FASTENED COVER.

5. WIRING DEVICES:

A. PROVIDE DUPLEX, HOSPITAL GRADE RECEPTACLES 2 POLE, 3 WIRE GROUNDING WITH GREEN HEXAGONAL EQUIPMENT GROUND SCREWS, GROUND TERMINALS AND POLES INTERNALLY CONNECTED TO MOUNTING YOKE, 20 AMPERES, 125 VOLTS, WITH METAL PLASTER EARS, SIDE WIRING, NEMA CONFIGURATION 5–20R. ALL RECEPTACLES ON EMERGENCY POWER SHALL BE IN RED COLOR WITH MATCHING COVER PLATES.

B. WEATHERPROOF RECEPTACLE, SHALL BE WEATHER RESISTANT PER NEC 406.9.

C. SWITCHES, 20 AMPS, 120/277 VOLTS, WITH MOUNTING YOKE INSULATED FROM MECHANISM, EQUIPPED WITH PLASTER EARS, SWITCH HANDLE, AND SIDE WIRED SCREW TERMINALS.

D. ALL SWITCHES AND RECEPTACLES SHALL BE OF WHITE COLOR WITH MATCHING COVER PLATES, OR AS SELECTED BY ARCHITECT.

E. ALL DEVICES INSTALLED IN THE LOCATION EXPOSED TO AMBIENT CONDITIONS SHALL BE WEATHERPROOF AND SHALL COMPLY WITH NEC 406.9.

6. PANELBOARDS:

A. PANELBOARD BUSBARS SHALL BE COPPER.

B. PANELBOARD ENCLOSURES: PROVIDE GALVANIZED SHEET STEEL CABINET, CODE–GAUGE, GUTTERS. PROVIDE FRONTS WITH ADJUSTABLE TRIM CLAMPS, AND DOORS WITH CONCEALED PIANO DOOR HINGES AND DOOR SWINGS AS INDICATED. EQUIPMENT WITH INTERIOR CIRCUIT–DIRECTORY FRAME AND CARD WITH CLEAR PLASTIC COVERING. PROVIDE BAKED GRAY ENAMEL FINISH OVER A RUST INHIBITOR COATING. DESIGN ENCLOSURES FOR RECESSED/SURFACE MOUNTING AS INDICATED. PROVIDE ENCLOSURES WHICH ARE FABRICATED BY SAME MANUFACTURES AS PANELBOARDS WHICH MATE AND MATCH PROPERLY WITH PANELBOARD TO BE ENCLOSED.

C. CABINETS FOR DISTRIBUTION PANELS SHALL HAVE 6 INCHES OF GUTTER SPACE ON ALL SIDES. PANELBOARDS AND LIGHTING PANELS SHALL HAVE A MINIMUM OF 5" ON ALL SIDES.

D. ALL PANELBOARDS SHALL BE EQUIPPED WITH COMMON KEYED LOCKS. PROVIDE MINIMUM OF ONE KEY PER PANEL PLUS (6) SPARES.

E. PANELBOARDS SHALL BE AS INDICATED ON THE DRAWINGS, WITH BOLT–ON MOLDED CASE CIRCUIT BREAKERS AND COPPER BUS BARS. CIRCUIT BREAKERS AND INTERIORS SHALL BE OF THE SAME MANUFACTURER AND UL LISTED. THE PANELBOARDS SHALL COMPLY WITH ALL APPLICABLE STANDARDS.

7. DISCONNECT SWITCHES:

A. DISCONNECT SWITCHES SHALL BE TYPE HD, HEAVY DUTY, FUSIBLE OR NON–FUSIBLE, AS NOTED, SINGLE THROW, 600–V AC, 1200 A AND SMALLER: UL 98 AND NEMA KS 1, HORSEPOWER RATED, WITH CLIPS OR BOLT PADS TO ACCOMMODATE INDICATED FUSES, LOCKABLE HANDLE WITH CAPABILITY TO ACCEPT TWO PADLOCKS, AND INTERLOCKED WITH COVER IN CLOSED POSITION. NEMA TYPE 1 OR 3R, AS REQUIRED.

ELECTRICAL DEMOLITION NOTES

1. CONTRACTOR SHALL REMOVE ALL EXISTING WORK THAT WILL NOT BE REUSED DURING NEW CONSTRUCTION. LEAVING THE BUILDING FREE AND CLEAN OF OLD SYSTEMS.
2. THE CONTRACTOR SHALL COORDINATE ALL WORK WITH OTHER TRADES.
3. CONTRACTOR SHALL BE RESPONSIBLE FOR MAINTAINING FIRE RATING, AND WATERPROOFING INTEGRITY IN ALL CASES.
4. ALL REMOVED ITEMS SHALL BECOME THE PROPERTY OF THE CONTRACTOR FOR DISPOSAL UNLESS OTHERWISE DIRECTED. CONTRACTOR SHALL COORDINATE FOR ITEMS THAT SHALL BE RETURNED TO COR. OTHER ITEMS THAT ARE NOT REQUIRED TO BE TURNED IN SHALL BECOME THE PROPERTY OF THE CONTRACTOR FOR DISPOSAL.
5. DEMOLITION SHALL BE WELL COORDINATED TO MINIMIZE DOWN TIME OF SYSTEMS THAT WILL REMAIN IN OPERATION.
6. PROVIDE CAP OFF CONNECTIONS FOR ALL REMOVED OR CUT OFF WORK THAT WILL NOT BE RECONNECTED DURING THE NEW WORK PHASE.
7. REMOVE ALL EXPOSED, ELECTRICAL SERVICES THAT ARE NOT GOING TO BE REUSED IN NEW WORK BACK TO SOURCE.
8. WHEN DEMOLITION WORK IS AFFECTING EXISTING UTILITIES SERVING BASE BUILDING, CONTRACTOR SHALL RELOCATE, REROUTE, OFFSET IN CEILING SPACE, OR UNDER FLOOR SLAB, (SAW CUT SLAB WHEN REQUIRED) AND RELOCATE ALL SERVICES IN ACCORDANCE WITH ALL APPLICABLE CODES, REGULATIONS AND GOOD PRACTICE OF TRADES. COORDINATE WITH BUILDING OWNER REPRESENTATIVE, AND MAKE PROVISIONS FOR TEMPORARY SERVICES AS REQUIRED. CONTRACTOR SHALL COORDINATE AND GIVE ADEQUATE NOTICE TO COR PRIOR TO WORK IN ANY BASE BUILDING UTILITIES.
9. ALL ELECTRICAL DEVICES IN WALLS TO BE DEMOLISHED SHALL BE REMOVED UNLESS OTHERWISE NOTED. MAINTAIN CIRCUIT CONTINUITY FOR DEVICES THAT REMAIN.
10. SUPPORT ALL CEILING MOUNTED DEVICES INDEPENDENT OF CEILING GRIDS & TILES, WHICH WILL BE REMOVED & REINSTALLED WHEN NEW WALLS ARE CONSTRUCTED.

ELECTRICAL ABBREVIATIONS

NOTE: THESE ABBREVIATIONS ARE STANDARD AND ALL MAY NOT BE APPLICABLE TO THIS PROJECT.

A	AMP	IG	ISOLATED GROUND
AFF	ABOVE FINISHED FLOOR	KVA	KILOVOLT AMPS
AIC	AMPS INTERRUPTING CAPACITY	KW	KILOWATTS
ATS	AUTOMATIC TRANSFER SWITCH	NEC	NATIONAL ELECTRICAL CODE
AV	AUDIO VIDEO	NEMA	NATIONAL ELECTRICAL MANUFACTURERS ASSOC
CB	CIRCUIT BREAKER	NFPA	NATIONAL FIRE PROTECTION ASSOCIATION
CKT	CIRCUIT	NFSS	NON FUSED SAFETY SWITCH
COR	CONTRACTING OFFICER REPRESENTATIVE	OCP	OVER CURRENT PROTECTION
CU	COPPER	P	POLE
DN	DOWN	SWBD	SWITCHBOARD
EC	EMPTY CONDUIT	TR	TAMPER RESISTANT
FAAP	FIRE ALARM ANNUNCIATOR PANEL	TRB	TERMINAL REHEAT BOX
FACP	FIRE ALARM CONTROL PANEL	UL	UNDERWRITERS LABORATORY
FSS	FUSED SAFETY SWITCH	UON	UNLESS OTHERWISE NOTED
GFI	GROUND FAULT INTERRUPTER	V	VOLTS
GND	GROUND	VA	VOLT AMPS
HP	HORSE POWER	VFD	VARIABLE FREQUENCY DRIVE
HWRC	HOT WATER RECIRCULATING PUMP	W	WATTS
IBC	INTERNATIONAL BUILDING CODE	WP	WEATHERPROOF
		XFMR	TRANSFORMER

DEMO/NEW WORK LEGEND

(E) DENOTES EXISTING TO REMAIN.

(R) DENOTES EXISTING TO BE REMOVED.

(RE) DENOTES EXISTING TO BE RELOCATED.

(ER) DENOTES NEW LOCATION OF EXISTING ITEM.(*)

(N) DENOTES NEW TO MATCH EXISTING. (*)

(*) EXTEND AND RECONNECT TO EXISTING BRANCH CIRCUIT WIRING AS REQUIRED.

(X) REMOVE WITH ALL CIRCUITRY THERETO.

ELECTRICAL SYMBOLS

NOTE: THESE SYMBOLS ARE STANDARD AND ALL MAY NOT BE APPLICABLE TO THIS JOB. ALL MOUNTING HEIGHTS ARE STANDARD UNLESS NOTED OTHERWISE ON THE DRAWINGS.

- BRANCH CIRCUIT WIRING CONCEALED IN WALLS OR CEILING. NUMBER OF HASHES INDICATES NUMBER OF WIRES AND SHOWN ONLY WHERE REQUIRED FOR CLARITY. 2#12AWG + 1#12GND IN 3/4"C.
- BRANCH CIRCUIT WIRING RUN UNDER GROUND OR UNDER SLAB. 2#12AWG + 1#12GND IN 3/4"C.
- HOME RUN TO PANELBOARD. NUMBER OF ARROWS INDICATE NUMBER OF CIRCUITS IN HOME RUN. 2#12AWG + 1#12GND IN 3/4"C.
- $m MOTOR RATED SWITCH WITH THERMAL OVERLOAD PROTECTION.
- JUNCTION BOX, SIZE AS REQUIRED.
- DUPLEX RECEPTACLE, NEMA 5–20R, (WP) DENOTES WEATHERPROOF WHILE IN USE WITH GROUND FAULT INTERRUPTER (GFI).
- 120/208 VOLT ELECTRICAL PANELBOARD, SURFACE/RECESSED MOUNTED, +6'–0" TO TOP.
- MOTOR CONNECTION.
- NON–FUSED DISCONNECT SWITCH. 600V, OR 240V, #/# INDICATE AMPS/POLE.
- FUSE DISCONNECT SWITCH 600V, OR 240V, POLES, AMPS AND FUSING TO MATCH CIRCUIT BREAKER.
- VFD VARIABLE FREQUENCY DRIVE WITH DISCONNECTING MEANS. PROVIDED BY MECHANICAL CONTRACTOR, CONNECTION BY THE ELECTRICAL CONTRACTOR.
- MOTOR STARTER.
- ENCLOSED CIRCUIT BREAKER.
- SD DUCT MOUNTED SMOKE DETECTOR. REFER TO MECHANICAL DRAWING FOR EXACT LOCATION.
- SD D DUCT MOUNTED SMOKE DETECTOR ALARM INDICATING DEVICE. WALL MOUNT +60" A.F.F.
- HD HEAT DETECTOR.
- GROUND PER NEC ARTICLE 250.

NEW WORK GENERAL NOTES

1. ALL PENETRATIONS IN WALL, CEILING, AND FLOOR MUST BE SEALED/CAULKED VAPOR TIGHT. THIS INCLUDES, BUT ARE NOT LIMITED TO THOSE PENETRATIONS MADE BY CONDUITS, JUNCTION BOXES, AND EQUIPMENT/CONDUIT/CAST BOX SUPPORTS.
2. PROVIDE VAPOR TIGHT SEALANT AROUND THE SURFACE MOUNTED PORTIONS OF ALL LIGHTING FIXTURES, LIGHT SWITCHES, RECEPTACLES, TELECOMMUNICATION OUTLETS, WIREMOLD, SECURITY EQUIPMENT, ALARM DEVICES, AND FIRE ALARM EQUIPMENT.
3. ALL JUNCTION BOXES SHALL BE CAST TYPE WITH WEATHERPROOF, GASKETED COVERS. ALL CONDUITS AND WIRING SERVING JUNCTION BOXES SHALL BE SEALED AND CAULKED VAPOR TIGHT COMING INTO BOX, INSIDE BOX, AND AT FINISHED CEILING PENETRATION. SEAL AT INSIDE SUPPORT PENETRATIONS.
4. DO NOT EXPOSE CONDUITS IF POSSIBLE UNLESS NOTED OTHERWISE. ALL EXPOSED CONDUITS SHALL BE RGS CONDUIT WITH THREADED FITTINGS. ALL ALARM, SECURITY, TELECOMMUNICATIONS, FIRE ALARM, AND ELECTRICAL WIRING MUST BE IN RGS CONDUIT. SEAL AT CONDUIT SUPPORTS.
5. ALL CONDUITS AND WIRING SERVING LIGHTING FIXTURES SHALL BE SEALED AND CAULKED VAPOR TIGHT COMING INTO FIXTURE AND AT FINISHED CEILING PENETRATION. SEAL AT INSIDE SUPPORT PENETRATIONS.
6. ALL WORK DONE BY ELECTRICAL CONTRACTOR MUST NOT ADVERSELY IMPACT THE VAPOR TIGHT ENVIRONMENT OF THE PROJECT AREA. ENSURE THAT ALL DEVICES TO WHICH ELECTRICAL POWER IS FED ARE PROPERLY SEALED INSIDE AND WHERE ATTACHED TO WALL.

NO.	DESCRIPTION	DATE
	30% SUBMISSION	02-23-2022
	30% SUBMISSION (RESUBMISSION)	12-30-2022
	60% SUBMISSION	11-24-2023
	100% SUBMISSION	03-27-2024
	100%-2ND SUBMISSION	05-14-2024
	BID DOCUMENTS	05-20-2025

CONSULTANTS:

SEAL

AMBRISH K. RASTOGI REGISTERED 043193 STATE OF WEST VIRGINIA PROFESSIONAL ENGINEER

SIGNATURE:

ARCHITECT/ENGINEERS:

A DESIGN GROUP, LLC
ART - ARCHITECTURE - ENGINEERING
2787 HILL ROAD
VIENNA, VA 22181

FRANK V. STURGEON, AIA

AMBRISH RASTOGI, PE

703.938.5226
FRANK@ADG10.COM

Drawing Title: COVER SHEET- ELECTRICAL

Approved: Project Director

Project Title: Replace Boiler #3

Location: Clarksburg WV Medical Center

Date: 05/20/2025 | Checked: AR | Drawn: NN

Project Number: 540-22-103

Building Number: NO. 1

Drawing Number: E001

Dwg. 22 of 25

Office of Construction and Facilities Management

Department of Veterans Affairs

VA FORM 08-6231

IF THIS SHEET IS NOT 30" X42" FULL SIZE, USE GRAPHIC SCALE.

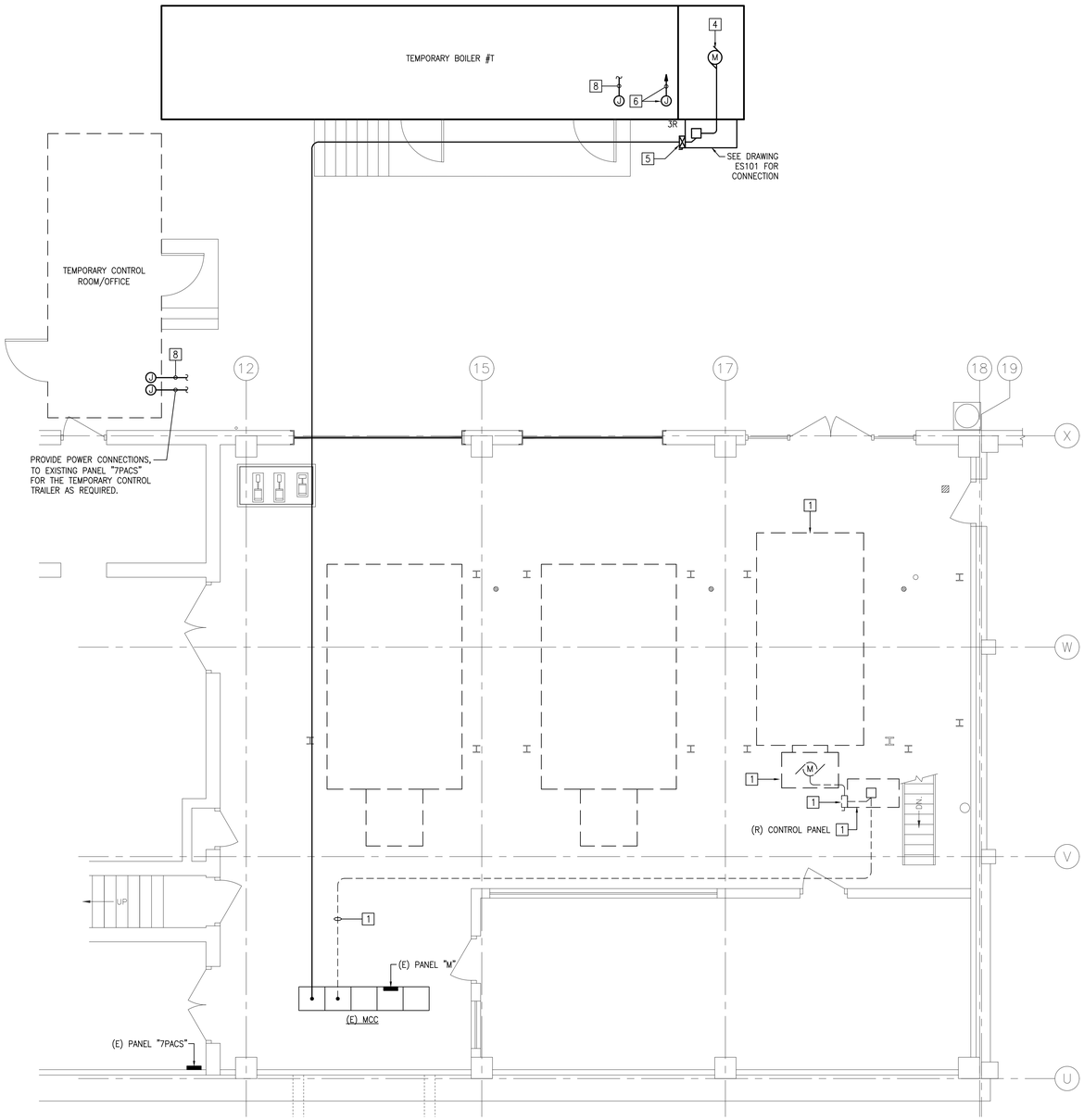

1 BOILER ROOM - DEMOLITION WORK PLAN
1/4" = 1'-0"

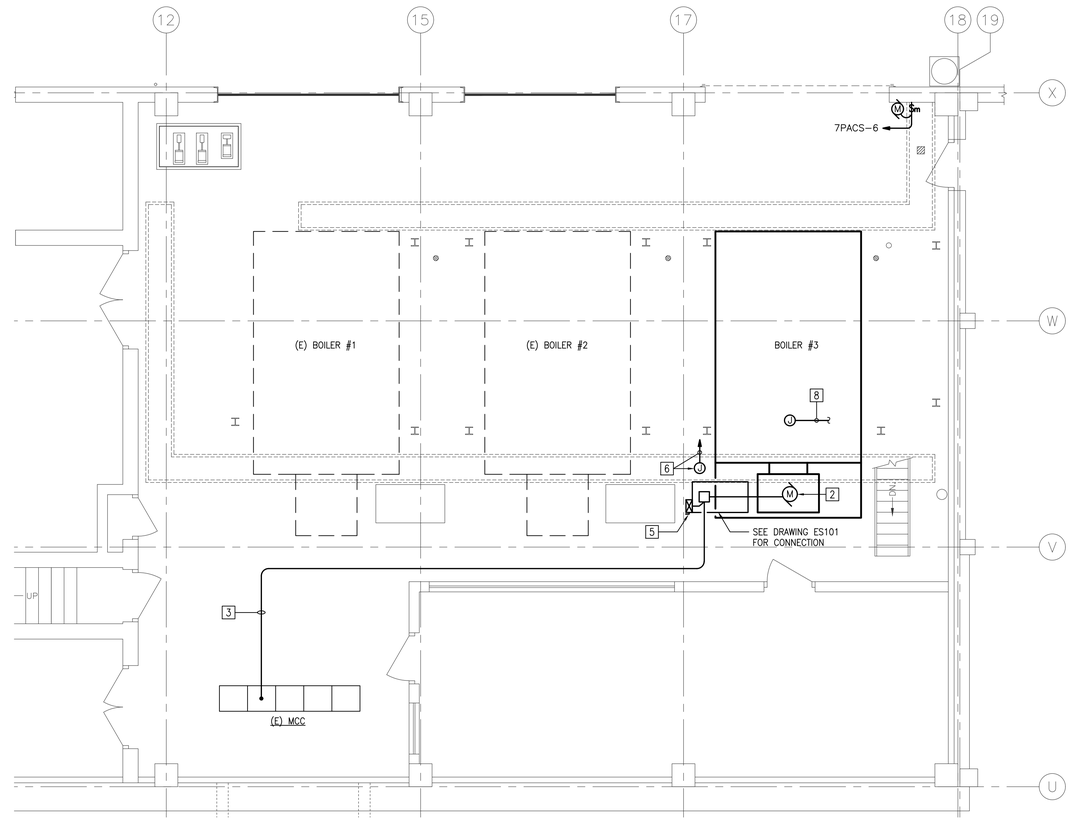

2 BOILER ROOM - NEW WORK PLAN
1/4" = 1'-0"

GENERAL NOTES - DEMOLITION & NEW WORK

1. REFER TO THE ELECTRICAL COVER SHEET FOR SPECIFICATIONS, GENERAL NOTES, SYMBOLS, AND ABBREVIATIONS.
2. REFER TO THE MECHANICAL AND PLUMBING DRAWINGS FOR EXACT LOCATIONS OF ALL DEMOLISHED EQUIPMENT.
3. PROTECT EXISTING EMERGENCY LIGHTS, EXIT SIGNS, AND FIRE ALARM DEVICES EXCEPT WHERE DEMOLITION IS NEEDED.
4. DEMOLITION WORK INDICATED IS DIAGRAMMATIC AND IS NOT SHOWN INCLUSIVELY. THE DEMOLITION DRAWING IS INTENDED TO DEMONSTRATE MAJOR ITEMS ONLY. THE CONTRACTOR IS REQUIRED TO PERFORM SELECTIVE DEMOLITION AS NEEDED TO ACCOMPLISH THE PROJECT INTENT. IF DEMOLITION WORK IS UNCLEAR FOR ANY ITEM, THE CONTRACTOR SHALL BRING IT TO THE ATTENTION OF THE ARCHITECT/ENGINEER FOR RESOLUTION BEFORE PROCEEDING.
5. REMOVE ALL ABANDONED WIRING BACK TO THE PANEL/SOURCE AS APPLICABLE.
6. COORDINATE WITH COR, AND BUILDING ENGINEERS PRIOR TO SCHEDULING ANY SHUTDOWN REQUIRED DURING CONSTRUCTION.
7. ALL RACEWAY PROVIDED UNDER THIS CONTRACT TO BE RUN EXPOSED. REFER TO SPECIFICATIONS FOR ADDITIONAL REQUIREMENTS.
8. CONTROL CIRCUIT FOR BOILER 3A SHALL BE TIED INTO THE EXISTING EMERGENCY BOILER SHUT OFF STATIONS.
9. REFER TO DRAWING ES101 FOR MCC SINGLE LINE DIAGRAM, ELEVATION AND PANEL SCHEDULE.
10. PROVIDE ANOTHER BREAKER IN ADDITION TO THE MAIN CABINET BREAKER THAT POWERS THE BURNER CONTROL SYSTEM.

KEYED NOTES - DEMOLITION & NEW WORK

1. DISCONNECT AND REMOVE (R) EXISTING BOILER WITH ASSOCIATED, BLOWER, DISCONNECT SWITCH, CONTROL WIRING AND FEEDERS. THE EXISTING CONDUITS TO REMAIN AND REUSED IF POSSIBLE.
2. NEW BOILER BLOWER 20HP, 208V, 3ø. COORDINATE WITH MECHANICAL DRAWING FOR EXACT LOCATION.
3. PROVIDE 3 #2 + 1 #8G IN 1-1/4" CONDUITS.
4. TEMPORARY BOILER BLOWER 20HP, 208V, 3ø. COORDINATE WITH MECHANICAL DRAWING FOR EXACT LOCATION. PROVIDE 3 #2 + 1 #6G IN 1-1/4" CONDUITS. DISCONNECT AND REMOVE STARTER/DISCONNECT, FEEDERS, WIRING, CONDUIT AND CONTROL CIRCUIT AFTER THE BOILER #3 IS INSTALLED AND OPERATION.
5. PROVIDE COMBINATION STARTER AND DISCONNECT SWITCH SIZE 3 FVNR AND 3P, 100A, 240VAC MCP IN NEMA 1 ENCLOSURE FOR INDOOR BOILER AND NEMA 3R FOR OUTDOOR TEMPORARY BOILER.
6. PROVIDE JUNCTION BOX AND 120V CIRCUIT FOR CONNECTION FOR BOILER CONTROL CIRCUIT. CONNECT TO 20A, 1 POLE CIRCUIT BREAKER AVAILABLE IN EXISTING PANEL "M" LOCATED IN EXISTING "MCC", WITH 2 #12 + 1 #12 GROUND IN 3/4" CONDUIT.
7. NEW GARAGE DOOR OPENER 1/2HP, 120V, 1ø, WITH SENSING DEVICE.
8. PROVIDE JUNCTION BOX AND 1" EMPTY CONDUIT WITH PULL WIRE FROM THE INDICATED LOCATION TO CONTROL ROOM FOR DATA CONNECTION.

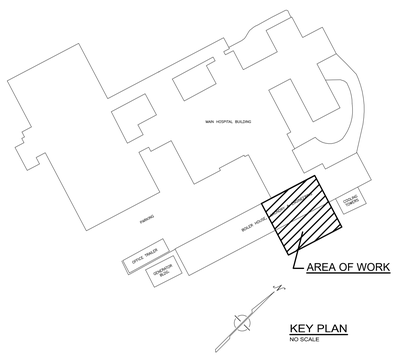

KEY PLAN
NO SCALE

NO.	DESCRIPTION	DATE
	30% SUBMISSION	02-23-2022
	30% SUBMISSION (RESUBMISSION)	12-30-2022
	60% SUBMISSION	11-24-2023
	100% SUBMISSION	03-27-2024
	100%-2ND SUBMISSION	05-14-2024
	BID DOCUMENTS	05-20-2025

CONSULTANTS:

SEAL

AMBRISH K. RASTOGI REGISTERED 04193 STATE OF WEST VIRGINIA PROFESSIONAL ENGINEER

SIGNATURE:

ARCHITECT/ENGINEERS:

A DESIGN GROUP, LLC
ART - ARCHITECTURE - ENGINEERING
2787 HILL ROAD
VIENNA, VA 22181

FRANK V. STURGEON, AIA

AMBRISH RASTOGI, PE

703.938.5226
FRANK@ADG10.COM

Drawing Title: **BOILER ROOM FLOOR PLAN- DEMOLITION & NEW WORK**

Approved: Project Director

Project Title: **Replace Boiler #3**

Location: Clarksburg WV Medical Center

Date: 05/20/2025 | Checked: AR | Drawn: NN

Project Number: **540-22-103**

Building Number: NO. 1

Drawing Number: **EP101**

Dwg. 23 of 25

Office of Construction and Facilities Management

Department of Veterans Affairs

VA FORM 08-6231

IF THIS SHEET IS NOT 30" X42" FULL SIZE, USE GRAPHIC SCALE.

3 E100 POLE BASE DETAIL
NOT TO SCALE

LUMINAIRE SCHEDULE

SYMBOL	LABEL	ARRANGEMENT	TOTAL LAMP LUMENS	LLF	VOLT	DESCRIPTION
A	WLS LIGHTING WLS-MIM-24L-SIL-SW-UNV-50-PCI120-BRZ-IL	DOUBLE	24000 LUMENS 5000K, 187 WATTS	0.950	UNIVERSAL	PROVIDE WITH PHOTOCELL AND (20' POLE)
B	WLS LIGHTING WLS-MIM-24L-SIL-SW-UNV-50-PCI120-BRZ-IL	SINGLE	24000 LUMENS 5000K, 187 WATTS	0.950	UNIVERSAL	PROVIDE WITH PHOTOCELL AND (20' POLE)
C	H.E. WILLIAMS, Inc. WPAL-L49-8-50-BZ-PC	SINGLE	15381 LUMENS 5000K, 69 WATTS	-	UNIVERSAL	PROVIDE WITH PHOTOCELL

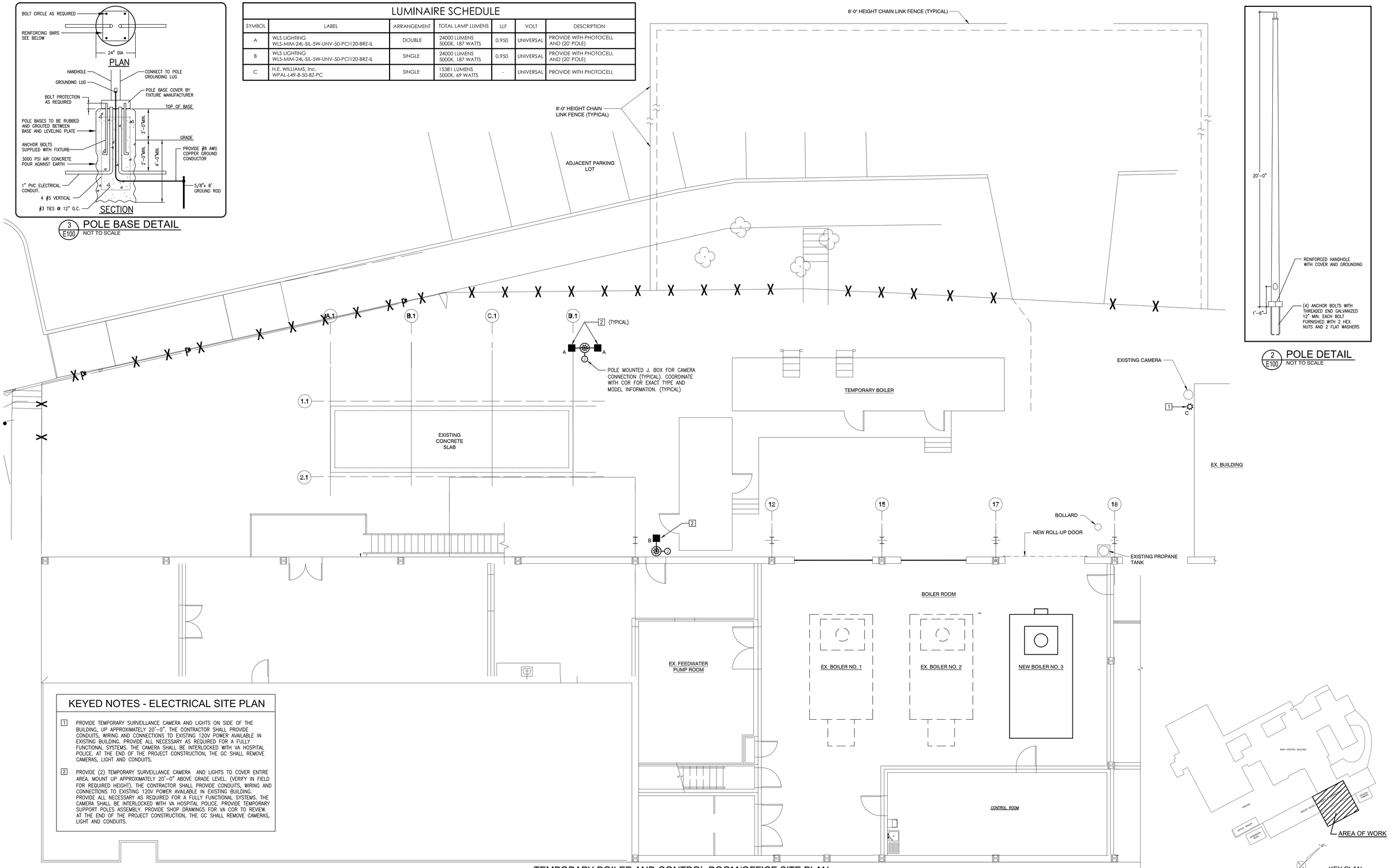

2 E100 POLE DETAIL
NOT TO SCALE

KEYED NOTES - ELECTRICAL SITE PLAN

1. PROVIDE TEMPORARY SURVEILLANCE CAMERA AND LIGHTS ON SIDE OF THE BUILDING, UP APPROXIMATELY 20'–0". THE CONTRACTOR SHALL PROVIDE CONDUITS, WIRING AND CONNECTIONS TO EXISTING 120V POWER AVAILABLE IN EXISTING BUILDING. PROVIDE ALL NECESSARY AS REQUIRED FOR A FULLY FUNCTIONAL SYSTEMS. THE CAMERA SHALL BE INTERLOCKED WITH VA HOSPITAL POLICE. AT THE END OF THE PROJECT CONSTRUCTION, THE GC SHALL REMOVE CAMERAS, LIGHT AND CONDUITS.

2. PROVIDE (2) TEMPORARY SURVEILLANCE CAMERA AND LIGHTS TO COVER ENTIRE AREA. MOUNT UP APPROXIMATELY 20'–0" ABOVE GRADE LEVEL. (VERIFY IN FIELD FOR REQUIRED HEIGHT). THE CONTRACTOR SHALL PROVIDE CONDUITS, WIRING AND CONNECTIONS TO EXISTING 120V POWER AVAILABLE IN EXISTING BUILDING. PROVIDE ALL NECESSARY AS REQUIRED FOR A FULLY FUNCTIONAL SYSTEMS. THE CAMERA SHALL BE INTERLOCKED WITH VA HOSPITAL POLICE. PROVIDE TEMPORARY SUPPORT POLES ASSEMBLY. PROVIDE SHOP DRAWINGS FOR VA COR TO REVIEW. AT THE END OF THE PROJECT CONSTRUCTION, THE GC SHALL REMOVE CAMERAS, LIGHT AND CONDUITS.

TEMPORARY BOILER AND CONTROL ROOM/OFFICE SITE PLAN
SCALE: 3/16" = 1'-0"

KEY PLAN
NO SCALE

NO.	DESCRIPTION	DATE
	30% SUBMISSION	02-23-2022
	30% SUBMISSION (RESUBMISSION)	12-30-2022
	60% SUBMISSION	11-24-2023
	100% SUBMISSION	03-27-2024
	100%-2ND SUBMISSION	05-14-2024
	BID DOCUMENTS	05-20-2025

CONSULTANTS:

SEAL
AMBRISH K. RASTOGI REGISTERED PROFESSIONAL ENGINEER 043193 STATE OF WEST VIRGINIA
SIGNATURE:

ARCHITECT/ENGINEERS:

A DESIGN GROUP, LLC
ART - ARCHITECTURE - ENGINEERING
2787 HILL ROAD
VIENNA, VA 22181

FRANK V. STURGEON, AIA

AMBRISH RASTOGI, PE

703.938.5226
FRANK@ADG10.COM

Drawing Title: ELECTRICAL SITE PLAN

Approved: Project Director

Project Title: Replace Boiler #3

Location: Clarksburg WV Medical Center

Date: 05/20/2025 | Checked: AR | Drawn: NN

Project Number: 540-22-103

Building Number: NO. 1

Drawing Number: EP102

Dwg. 24 of 25

Office of Construction and Facilities Management

Department of Veterans Affairs

VA FORM 08-6231

IF THIS SHEET IS NOT 30" X42" FULL SIZE, USE GRAPHIC SCALE.

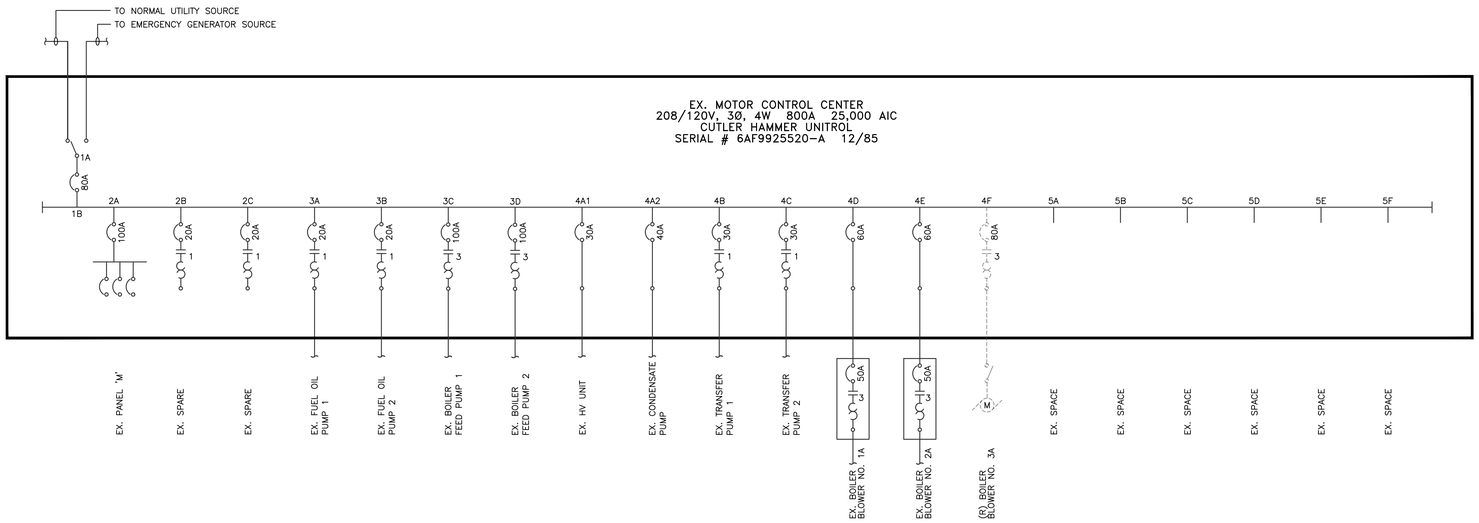

MCC ONE-LINE DIAGRAM-DEMOLITION

SCALE: NONE

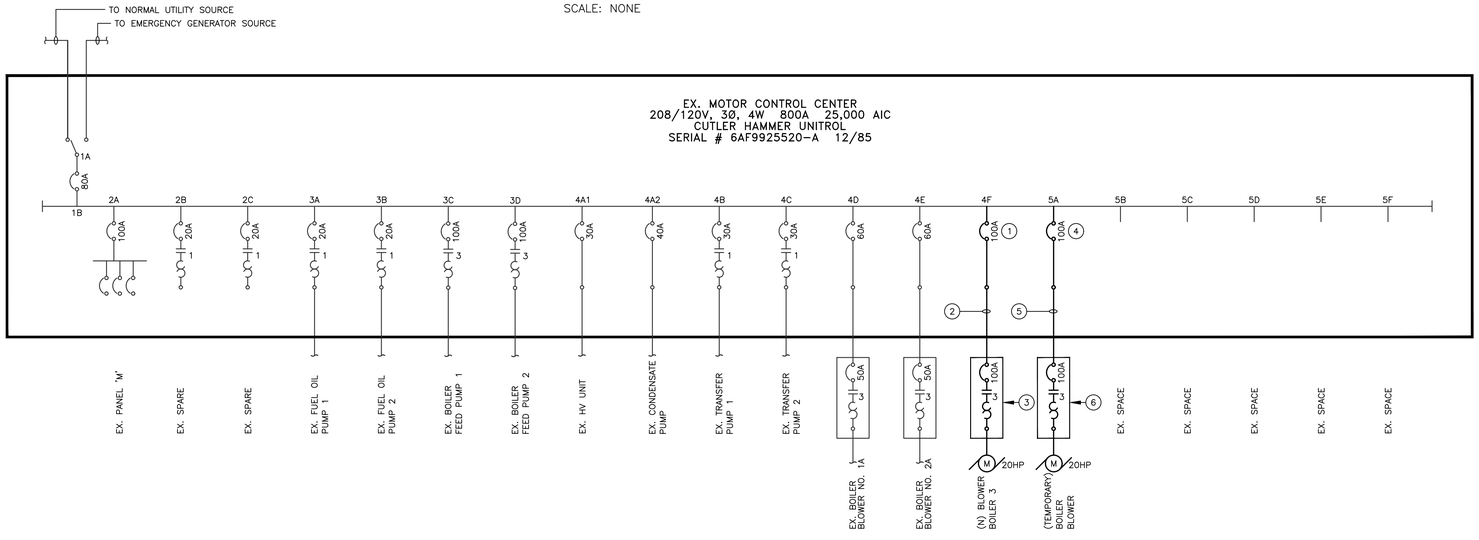

MCC ONE-LINE DIAGRAM-NEW WORK

SCALE: NONE

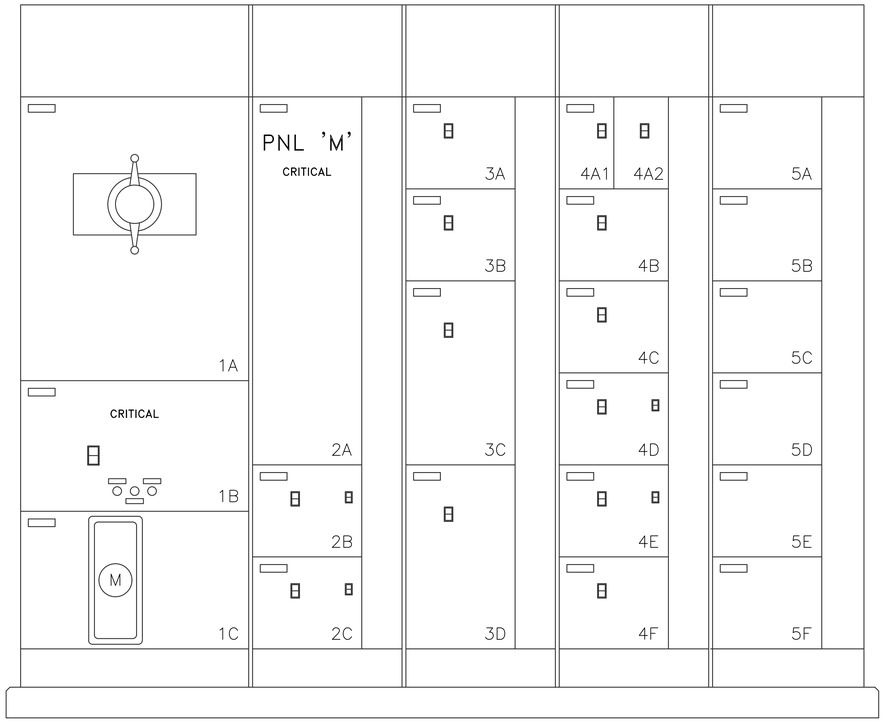

1 ES101 (E) MOTOR CONTROL CENTER-ELEVATION

SCALE: 1" = 1'-0"

SCHEMATIC LEGEND

SYMBOL	DESCRIPTION
60A	LOW VOLTAGE CIRCUIT BREAKER
	FVNR MOTOR STARTER, '1' INDICATES STARTER NEMA SIZE
	OVERLOAD RELAYS
	MANUAL TRANSFER SWITCH

KEYED NOTES: (#)

1. PROVIDE 100A CIRCUIT BREAKER IN EXISTING MCC BUCKET.
2. PROVIDE 3 #2 + 1#6 GROUND IN 1-1/4" CONDUIT.
3. COMBINATION STARTER SIZE AS INDICATED
4. PROVIDE 100A CIRCUIT BREAKER IN EXISTING SPACE 5B MCC BUCKET FOR TEMPORARY BOILER.
5. PROVIDE 3 #2 + 1#6 GROUND IN 1-1/4" CONDUIT.
6. COMBINATION STARTER SIZE AS INDICATED.
7. DISCONNECT AND REMOVE STARTER, WIRING, CONDUITS OF THE TEMPORARY BOILER AFTER THE BOILER #3 IS IN OPERATION. COORDINATE WITH COR.

(E) PANEL "7PACS"

POLES 24 **MIN AIC** EXISTING **NOTES** 1
VOLTS 208Y/120 VOLTS **PHWIRE** 3 PHASE/4 WIRE (A, B, C, N, EG) **MAIN** 60 AMPS MCB **NEUTRAL** 100 %
MOUNTING SURFACE **LOCATION** SWITCHGEAR RM. **FED FROM** SEE RISER

LOAD DESCRIPTION	LOAD KVA	BREAKER NOTE	BREAKER TRIP	CKT #	PHASE KVA A	PHASE KVA B	PHASE KVA C	CKT #	BREAKER TRIP	BREAKER NOTE	LOAD KVA	LOAD DESCRIPTION
(E) RECEPTACLES	0.72		20	1	0.90			2	20	2	0.18	(E) RECEPTACLE
(E) RECEPTACLES	0.72		20	3		1.26		4	20		0.54	(E) RECEPTACLES
(E) RECEPTACLE	0.18	2	20	5			1.35	6	20	3	1.17	(N) GARAGE DOOR #3
(E) RECEPTACLES	0.54		20	7	0.54			8	20			SPARE
SPARE			20	9				10	20			SPARE
SPARE			20	11				12	20			SPARE
SPARE			20	13				14	20			SPARE
SPARE			20	15				16	20			SPARE
SPARE			20	17				18	20			SPARE
SPARE			20	19				20	20			SPARE
SPARE			20	21				22	20			SPARE
SPARE			20	23				24	20			SPARE
TOTAL CONNECTED KVA PER PHASE					1.4	1.3	1.4					

LOAD COMPUTATIONS AND MINIMUM FEEDER AMPACITY

CATEGORY	CONNECTED KVA	DEMAND FACTOR	DEMAND KVA	DEMAND AMPS	MULTIFLIER	MINIMUM AMPACITY
LIGHTING		1.00			1.25	
RECEPTACLES	2.9	NEC TABLE 220.44	2.9	8.0	1.00	8.0
KITCHEN EQUIPMENT		0.65			1.00	
ELECTRICAL HEATING EQUIP		1.00			1.25	
WATER HEATER		1.00			1.25	
OTHER LOADS	1.2	1.00	1.2	3.3	1.00	3.3
					1.00	
					1.00	
					1.00	
TOTAL CONNECTED - KVA	4.1	TOTAL DEMAND AMPS	11	TOTAL MINIMUM FEEDER AMPACITY		11

NOTES
1. CIRCUIT BREAKER SHOWN ARE EXISTING UNLESS NOTED OTHERWISE.
2. EXISTING SHUT TRIP BREAKER.
2. PROVIDE 2 #12 + 1 #12 GROUND IN 3/4" CONDUIT.

NO.	DESCRIPTION	DATE
	30% SUBMISSION	02-23-2022
	30% SUBMISSION (RESUBMISSION)	12-30-2022
	60% SUBMISSION	11-24-2023
	100% SUBMISSION	03-27-2024
	100%-2ND SUBMISSION	05-14-2024
	BID DOCUMENTS	05-20-2025

CONSULTANTS:

SEAL

AMBRISH K. RASTOGI REGISTERED 043193 STATE OF WEST VIRGINIA PROFESSIONAL ENGINEER

SIGNATURE:

ARCHITECT/ENGINEERS:

A DESIGN GROUP, LLC
ART - ARCHITECTURE - ENGINEERING
2757 HILL ROAD
VIENNA, VA 22181

FRANK V. STURGEON, AIA

AMBRISH RASTOGI, PE

703.938.5226
FRANK@ADG10.COM

Drawing Title: **RISER DIAGRAMS**

Approved: Project Director

Project Title: **Replace Boiler #3**

Location: Clarksburg WV Medical Center

Date: 05/20/2025 | Checked: AR | Drawn: NN

Project Number: **540-22-103**

Building Number: NO. 1

Drawing Number: **ES101**

Dwg. 25 of 25

Office of Construction and Facilities Management

Department of Veterans Affairs

VA FORM 08-6231