WWTP REPAIR CLARIFIER #2

NORTHWEST ANNEX • CHESAPEAKE, VIRGINIA

NAVAL FACILITIES ENGINEERING SYSTEMS COMMAND MID-ATLANTIC

DESIGN AND CONSTRUCTION
FACILITIES ENGINEERING AND ACQUISITION DIVISION
NORFOLK, VIRGINIA

VICINITY MAP

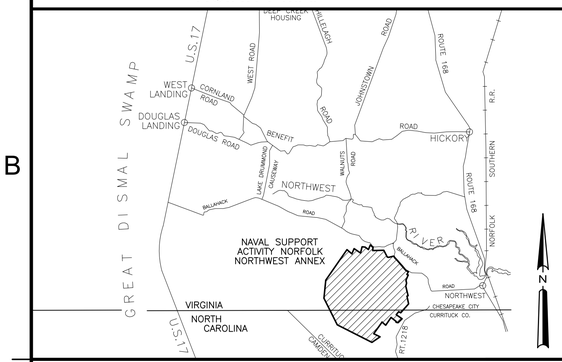

SYMBOLS LEGEND

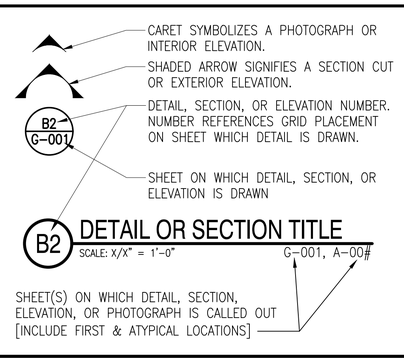

LOCATION MAP

GENERAL NOTES

1. THE GENERAL SCOPE OF THIS PROJECT INCLUDES, BUT IS NOT LIMITED TO FOLLOWING WORK AT THE NORTHWEST WASTEWATER TREATMENT PLANT (WWTP) CLARIFIER #2:
   - REPLACE THE ROTATING SCUM TROUGH, SKIMMER WIPER, EFFLUENT DROP BOX, AND PERTINENT FASTENERS AND HARDWARE
   - BLAST AND PAINT ALL ROTARY STRUCTURES, WEIRS, AND METAL SURFACES INSIDE THE CLARIFIER
   - BLAST AND PAINT THE TOPSIDE BRIDGE CATWALK AND GRATING
   - REPLACE THE EXISTING TOPSIDE GEARBOX AND DRIVE UNIT LOCATED ON THE BRIDGE CATWALK
   - AT THE CLARIFIER, STRUCTURE WALL, PROVIDE AND INSTALL A NEMA 4X CONTROL BOX. THIS WILL ALLOW POWER ISOLATION DOWNSTREAM OF THE MOTOR CONTROL CENTER (MCC) WHICH IS LOCATED INSIDE BUILDING 240.
   - MISCELLANEOUS CONDUIT WORK AND MOUNTING HARDWARE FOR THE NEW PANEL AND MOTOR
2. ALL ITEMS INDICATED TO BE REMOVED MUST BE DISPOSED OF OFF SITE.
3. WHERE EXISTING CONSTRUCTION IS DAMAGED BY CONSTRUCTION REQUIRED BY THESE DOCUMENTS. REPAIR THE DAMAGED ITEM(S) WITH MATERIALS TO MATCH THE ADJACENT MATERIAL, TEXTURE AND COLOR.
4. VERIFY ALL FIELD CONDITIONS AND DIMENSIONS PRIOR TO PROCEEDING WITH THE WORK. DIMENSIONS FOR EXISTING WORK ARE INDICATED AS "±". ALL DISCREPANCIES MUST BE BROUGHT TO THE IMMEDIATE ATTENTION OF THE CONSTRUCTION MANAGER IN WRITING.
5. ALL ITEMS MUST BE NEW AND PROVIDED BY THE CONTRACTOR.
6. COORDINATE LAY DOWN AREA WITH THE CONSTRUCTION MANAGER PRIOR TO THE PRECONSTRUCTION MEETING. THE ALLOWABLE AREA SIZE MUST BE ESTABLISHED BY THE CONSTRUCTION MANAGER.
7. MANUFACTURER'S TRADE NAMES LISTED ARE NOT INTENDED TO BE PROPRIETARY. PRODUCTS OF OTHER MANUFACTURERS WILL BE ACCEPTABLE PROVIDED THEY MATCH THE COLOR, FINISHES, TEXTURES AND PATTERNS OF THE MANUFACTURER LISTED, AND MEET THE TECHNICAL REQUIREMENTS OF THE SPECIFICATIONS OF THAT MANUFACTURE.
8. OBSERVE AND MAINTAIN BUILDING AND COMPOUND SECURITY REQUIREMENTS AS DIRECTED BY THE CONSTRUCTION MANAGER.
9. CONSTRUCTION WILL BE ACCOMPLISHED IN AND AROUND AREAS WHICH WILL REMAIN OPERATIONAL. AVOID INTERFERENCE WITH THE OPERATIONAL WORK ROUTINE.

LIST OF SHEETS

SHEET	SHEET NUMBER	NAVFAC DRAWING NO	SHEET TITLE
GENERAL			
1	G-001	12933704	COVER SHEET
CIVIL			
2	C-001	12933705	CIVIL GENERAL NOTES, LEGEND, ABBREVIATIONS, & LOCATION PLAN
3	C-101	12933706	CIVIL EXISTING CONDITIONS PLAN
4	CD101	12933707	CIVIL DEMOLIITON PLAN
5	CS101	12933708	CIVIL NEW WORK PLAN
6	CS501	12933709	CIVIL DETAILS
7	CS502	12933710	CIVIL DETAILS
8	CS503	12933711	CIVL DETAILS
9	C-901	12933712	CIVIL PHOTOGRAPHIC PLAN
ELECTRICAL			
10	E-001	12933713	ELECTRICAL SYMBOLS, LEGEND, ABBREVIATIONS, & NOTES
11	E-101	12933714	ELECTRICAL EXISTING CONDITIONS PLAN
12	ED101	12933715	ELECTRICAL DEMOLITION PLAN
13	ES101	12933716	ELECTRICAL NEW WORK PLAN
14	E-901	12933717	ELECTRICAL PHOTOGRAPHIC PLAN

MARK	DESCRIPTION	DATE

NAVFAC

SEAL

A/E INFO

APPROVED
FOR COMMANDER NAVFAC 4-30-26

ACTIVITY
JASON ETHERIDGE,NSA,HR

SATISFACTORY TO DATE 04/14/26

DES	JBJ	DRW	JBJ	CHK	WHW

PM/DM J. JONES, P.E.
BRANCH MANAGER W. WITHAM, P.E.
CHIEF ENG/ARCH J. MILLER, P.E.
FIRE PROTECTION N/A

DEPARTMENT OF THE NAVY
NAVAL FACILITIES ENGINEERING SYSTEMS COMMAND - MIDLANT
RGNC: NORFOLK
NAVAL FACILITIES ENGINEERING SYSTEMS COMMAND
NORFOLK, VA
NORTHWEST ANNEX
CHESAPEAKE, VA

WWTP REPAIR CLARIFIER #2

COVER SHEET

SCALE: AS NOTED
EPROJECT NO.: 1743738
CONSTR. CONTR. NO. N/A
NAVFAC DRAWING NO. 12933704
SHEET 1 OF 14

G-001

DRAWFORM REVISION: 14 SEP 2023

CIVIL GENERAL NOTES

1. ITEMS NOTED TO BE DEMOLISHED OR REMOVED MUST BECOME THE PROPERTY OF THE CONTRACTOR. REMOVE DEMOLITION DEBRIS FROM GOVERNMENT PROPERTY AND PROPERLY DISPOSE, UNLESS OTHERWISE SPECIFIED. ADHERE TO APPLICABLE FEDERAL, STATE, AND LOCAL REGULATIONS.
2. NO EXCAVATION WORK IS ANTICIPATED. SHOULD EXCAVATION BECOME NECESSARY, CONTACT MISS UTILITY OF VIRGINIA (TELEPHONE#: 811) TO HAVE THE EXISTING UNDERGROUND LINES MARKED ON THE GROUND SURFACE IN THE AREAS OF CONSTRUCTION.
3. COMPLY WITH THE PROVISIONS OF THE "VIRGINIA UNDERGROUND UTILITY DAMAGE PREVENTION ACT" (SECTION 56-265.14 ET. SEQ., CODE OF VIRGINIA, 1950, AMENDED).
4. PROVIDE SMOOTH AND GRADUAL GRADE TRANSITIONS WITH NO SHARP OR ABRUPT CHANGES UNLESS OTHERWISE NOTED.
5. ALL DISTURBED AND FINAL PAVED AREAS MUST BE GRADED TO PROMOTE POSITIVE DRAINAGE.
6. COORDINATE WITH THE CONTRACTING OFFICER FOR LAYDOWN AREAS PRIOR TO DELIVERY OF MATERIALS.
7. FIELD VERIFY EXISTING DIMENSIONS AND QUANTITIES PRIOR TO ORDERING MATERIALS OR BEGINNING WORK.
8. NEW WORK WILL BE ACCOMPLISHED IN AND AROUND AREAS WHICH WILL REMAIN OPERATIONAL. ACCORDINGLY, AVOID INTERFERENCE WITH THE OPERATIONAL WORK ROUTINE.
9. EXECUTE ALL WORK WITH CARE TO PROTECT FROM DAMAGE ALL ADJACENT EXISTING FEATURES THAT ARE TO REMAIN. ANY SUCH DAMAGE MUST BE REPAIRED OR REPLACED TO MATCH THE ORIGINAL CONDITION AS APPROVED BY THE CONTRACTING OFFICER AT NO COST TO THE GOVERNMENT.
10. SEED GRASS AREAS DISTURBED BY CONSTRUCTION ACTIVITIES AND ESTABLISHED ADEQUATE VEGETATIVE COVER, UNLESS OTHERWISE NOTED.
11. PROVIDE ALL DESIGNATED SAFETY REQUIREMENTS PRIOR TO STARTING WORK.

CIVIL LEGEND

EXISTING		NEW
	BUILDING	
	ASPHALT	
	CONCRETE	
	DROP INLET	
	CURB INLET	
AST	ABOVE GROUND STORAGE TANK	
XFR	TRANSFORMER	
	SANITARY MANHOLE	
OR	STORM MANHOLE	
	WATER VALVE	
	UTILITY POLE	
	LIGHT POLE	
	FIRE HYDRANT	
M	METER	
T	TELEPHONE PEDESTAL	
	GUY WIRE	
S	SANITARY SEWER MANHOLE	
CO	SEWER CLEANOUT	
T	TELEPHONE MANHOLE	
	MISCELLANEOUS SITE FEATURE / BOLLARD	
	INLET PROTECTION	
	SILT FENCE	
	SIGN	
SDx	STORM SEWER, TYP.	
SSx	SANITARY SEWER, TYP.	
Wx	WATER, TYP.	
GAS	NATURAL GAS, TYP.	
OE	OVERHEAD ELECTRICAL, TYP.	
UE	UNDERGROUND ELECTRICAL, TYP.	
X	CHAIN LINK FENCE, TYP.	

LOCATION PLAN

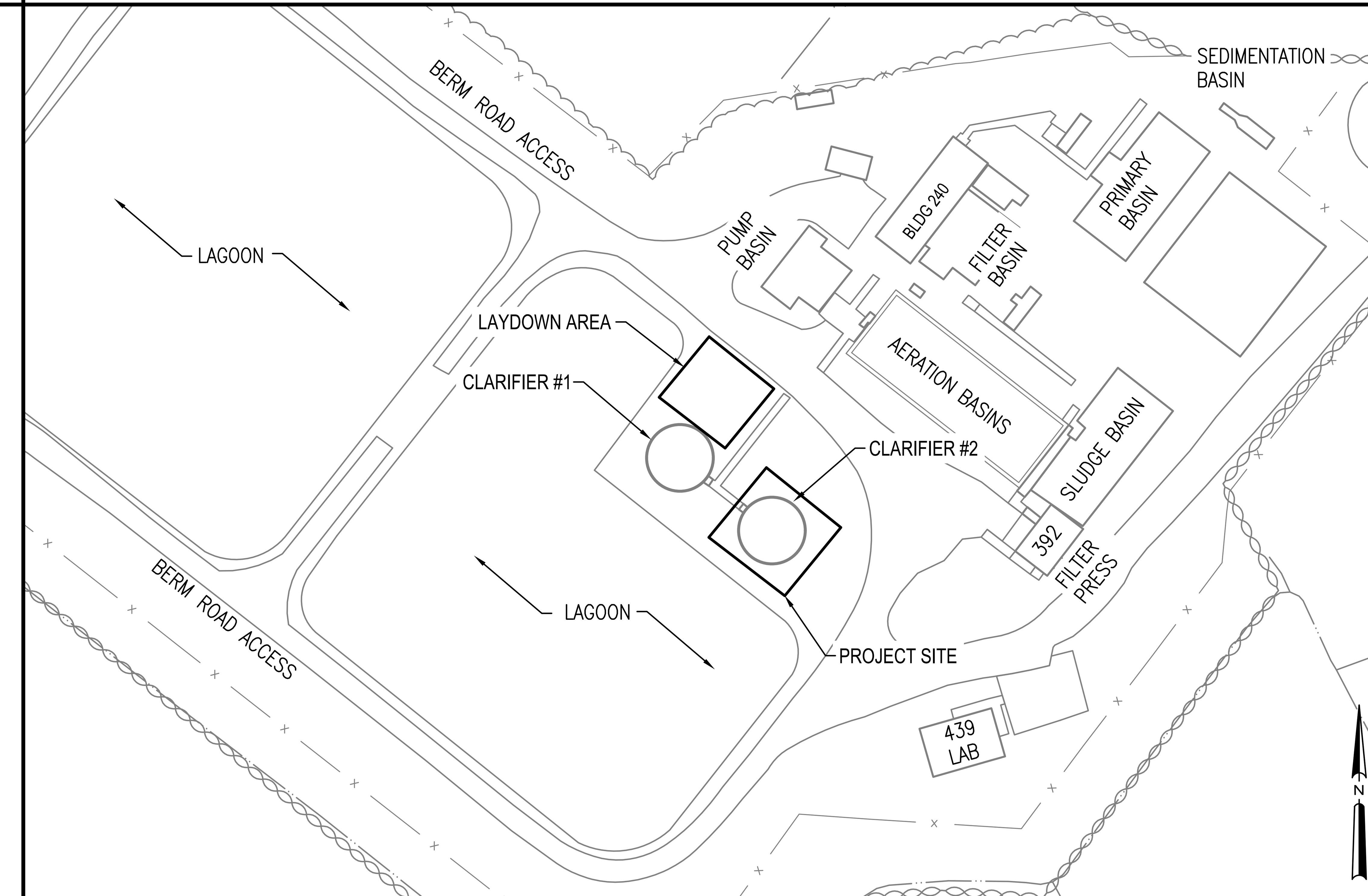

CIVIL ABBREVIATIONS

ASPH	ASPHALT	RCP	REINFORCED CONCRETE PIPE	SS	SANITARY SEWER
BC	BOTTOM OF CURB	RD	ROOF DRAIN	CO	CLEANOUT
BOC	BACK OF CURB	GEN	GENERATOR	SD	STORM DRAIN
BIT	BITUMINOUS	GW	GUY WIRE	SF	SILT FENCE
CL	CENTER LINE	HH	HAND HOLE	SW	SWITCH PAD
CONC	CONCRETE	HYD	HYDRANT	STD.	STANDARD
COMM	COMMUNICATION	INV	INVERT	SS	STAINLESS STEEL
DI	DROP INLET	IP	INLET PROTECTION	TP	TREE PROTECTION
DIA	DIAMETER	LP	LIGHT POLE	TYP	TYPICAL
DUR	DUROMETER	MAX	MAXIMUM	UG	UNDERGROUND
ELEV	ELEVATION	MG	MATCH EXISTING GRADE	UP	UTILITY POLE
EP	EDGE OF PAVEMENT	MH	MANHOLE	UNK	UNKNOWN
EX	EXISTING	MIN	MINIMUM	UP	UTILITY POLE
FA	FIRE ALARM	(N.F.)	NOT FOUND	W	WATER
FC	FACE OF CURB	NTS	NOT TO SCALE	WV	WATER VALVE
FG	FINISHED GRADE	PVMT	PAVEMENT	XFR	TRANSFORMER
FM	FORCE MAIN				

MARK | DESCRIPTION | DATE

NAVFAC

SEAL

A/E INFO

APPROVED
FOR COMMANDER NAVFAC 4-30-26
ACTIVITY
JASON ETHERIDGE,NSA,HR
SATISFACTORY TO DATE 04/14/26
DES JBJ | DRW JBJ | CHK WHW
PM/DM J. JONES, P.E.
BRANCH MANAGER W. WITHAM, P.E.
CHIEF ENG/ARCH J. MILLER, P.E.
FIRE PROTECTION N/A

DEPARTMENT OF THE NAVY NAVAL FACILITIES ENGINEERING SYSTEMS COMMAND
NAVAL FACILITIES ENGINEERING SYSTEMS COMMAND~MIDLANT
ROICC NORFOLK NORFOLK, VA
NORTHWEST ANNEX CHESAPEAKE, VA
WWTP REPAIR CLARIFIER #2
CIVIL GENERAL NOTES, LEGEND, ABBREVIATIONS, & LOCATION PLAN

SCALE: AS NOTED
EPROJECT NO.: 1743738
CONSTR. CONTR. NO. N/A
NAVFAC DRAWING NO. 12933705
SHEET 2 OF 14
C-001

DRAWFORM REVISION: 14 SEP 2023

FILE NAME: p:\Wnorthwest\buildings\0240 wwtp\2026_1743738_wwtp_repair_clarifier_2\8_Design\DWGS\Sheets\05_CIV\C-001 CIVIL NOTES.dwg PLOTTED: Thursday, April 30, 2026 12:22:13 PM USER: ...

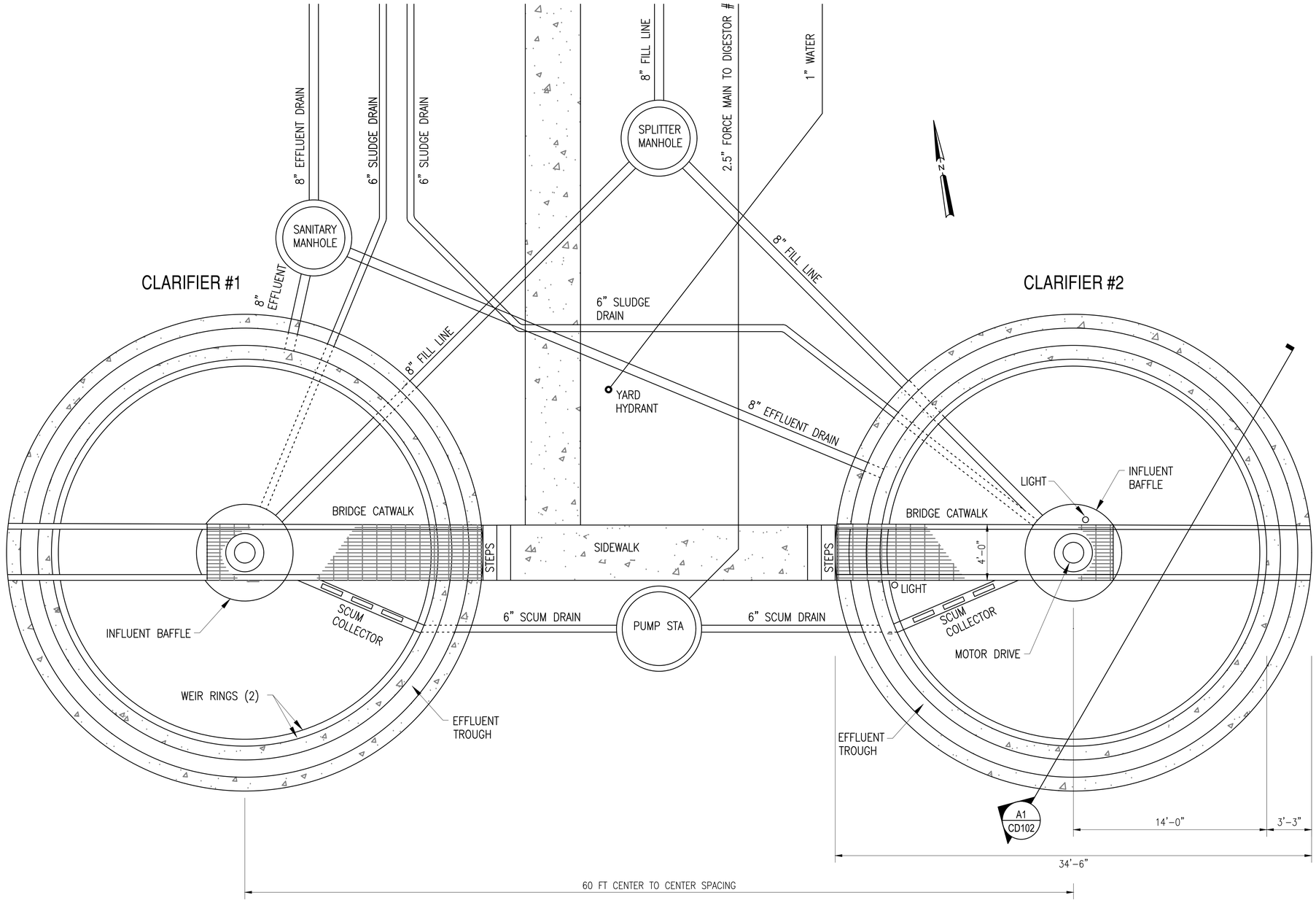

KEYNOTES

1. THE NORTHWEST WASTEWATER TREATMENT PLANT (WWTP) HAS TWO OPERATIONAL SECONDARY CLARIFIERS AS PART OF THEIR TREATMENT PROCESS TRAIN.
2. CLARIFIER #1 UNDERWENT EXTENSIVE INTERNAL REPAIRS IN 2023. THE WORK INCLUDED COMPONENT REPLACEMENTS, RECOATING OF INTERIOR METAL STRUCTURES, MOTOR REPLACEMENT, AND THE ADDITION OF A NEW ELECTRICAL PANEL. THIS PROJECT WILL ACCOMPLISH SIMILAR REPAIRS FOR CLARIFIER #2.
3. AT THE PRE-BID SITE VISIT, THE GOVERNMENT WILL LOWER THE WATER LEVEL TO WITHIN 12-INCHES OF THE BOTTOM OF THE CLARIFIER. THIS WILL ALLOW THE CONTRACTOR TO INSPECT THE STRUCTURE FOR PREPARATION OF A BID.
4. PRIOR TO THE ACTUAL START OF WORK, THE GOVERNMENT WILL BE RESPONSIBLE FOR TRANSFERRING THE SLUDGE TO OTHER LOCATIONS WITHIN THE PLANT PROCESS TRAIN. THE CONTRACTOR WILL BE RESPONSIBLE TO CLEAN THE INTERIOR OF THE BASIN.

EXISTING CONDITIONS PLAN

SCALE: 1" = 10'

GRAPHIC SCALE

1"=10' 0' 10' 20'

MARK	DESCRIPTION	DATE

NAVFAC

A/E INFO

APPROVED
FOR COMMANDER NAVFAC 4-30-26

ACTIVITY
JASON ETHERIDGE,NSA,HR

SATISFACTORY TO DATE 04/14/26

DES	JBJ	DRW	JBJ	CHK	WHW

PM/DM	J. JONES, P.E.
BRANCH MANAGER	W. WITHAM, P.E.
CHIEF ENG/ARCH	J. MILLER, P.E.
FIRE PROTECTION	N/A

DEPARTMENT OF THE NAVY
NAVAL FACILITIES ENGINEERING SYSTEMS COMMAND
ROICC NORFOLK
NAVAL FACILITIES ENGINEERING SYSTEMS COMMAND-MIDLANT NORFOLK, VA
NORTHWEST ANNEX CHESAPEAKE, VA
WWTP REPAIR CLARIFIER #2
CIVIL EXISTING CONDITIONS PLAN

SCALE:	AS NOTED
EPROJECT NO.:	1743738
CONSTR. CONTR. NO.	N/A
NAVFAC DRAWING NO.	12933706
SHEET	3 OF 14

C-101

DRAWFORM REVISION: 14 SEP 2023

FILE NAME: p:\1\Northwest\Buildings\0240 wwtp\2026_1743738_wwtp_repair_clarifier_2\B_Design\DWGS\Sheet\05_CIV\CD_CS_Series.dwg PLOTTED: Thursday, April 30, 2026 12:22:21 PM USER: liunette.roman-hugo

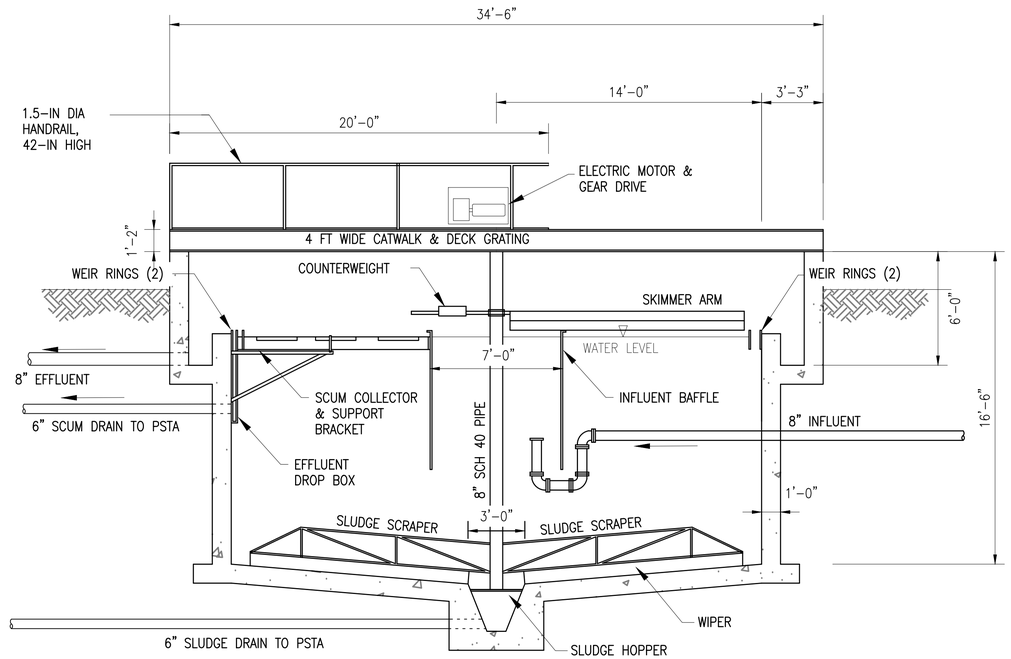

SECTION VIEW: CLARIFIER #2 EXISTING CONDITIONS

SCALE: 1" = 10'

A1
CD102

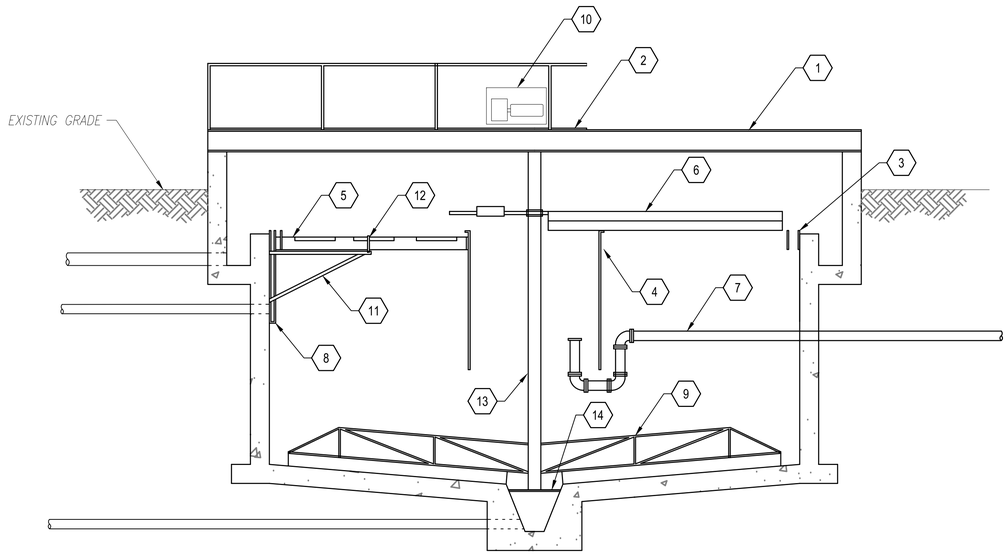

SECTION VIEW: CLARIFIER #2 DEMOLITION

SCALE: 1" = 10'

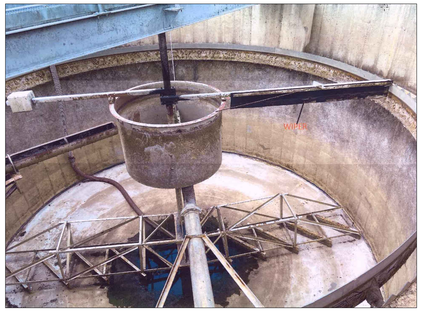

CLARIFIER #1 SLUDGE SCRAPER (PRE-REPAIR)

NO SCALE

NOTE: DEPICTIONS OF CLARIFIER #1 ARE INTENDED FOR INFORMATIONAL PURPOSES ONLY, AS THESE ARE THE ONLY EMPTY CLARIFIER PHOTOS AVAILABLE AT THE NORTHWEST WWTP.

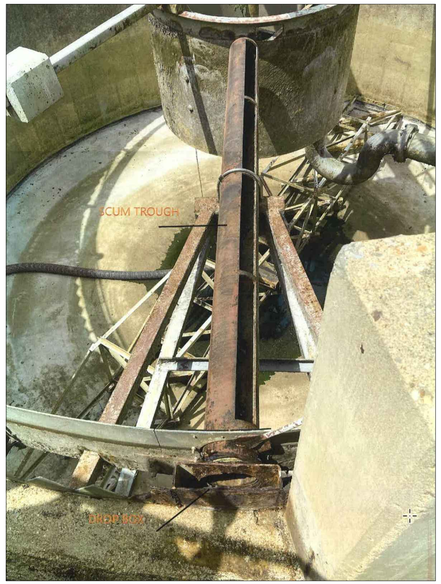

CLARIFIER #1 SCUM COLLECTOR (PRE-REPAIR)

NO SCALE

NOTE: DEPICTIONS OF CLARIFIER #1 ARE INTENDED FOR INFORMATIONAL PURPOSES ONLY, AS THESE ARE THE ONLY EMPTY CLARIFIER PHOTOS AVAILABLE AT THE NORTHWEST WWTP.

DEMOLITION KEYNOTES

NOTE: METAL SURFACE CLEANING IS DELINEATED AS SANDBLASTING WITH PARTICLE CONTAINMENT, SSPC-SP6. THE CONSTRUCTION INSTALLATION DATE IS 1992. LEAD PAINT IS NOT PRESENT. SURFACES TO BE BLASTED WILL ALSO BE PAINTED WITHIN THE SCOPE OF THIS PROJECT.

1. PREP AND BLAST (2) SUPPORT BEAMS AND HARDWARE FOR BRIDGE CATWALK. BEAM DIMENSIONS: 5-INCH FLANGES TOP AND BOTTOM, 14-IN DEEP MEMBER.
2. PREP AND BLAST STEEL DECKING AND HARDWARE.
3. PREP AND CLEAN PERIMETER WEIR RINGS, SUPPORT FRAMES AND HARDWARE.
4. PREP AND BLAST INFLUENT BAFFLE.
5. DEMOLISH AND REMOVE SCUM COLLECTOR.
6. DEMOLISH AND REMOVE NEOPRENE SKIMMER WIPER. ROTATING ARM AND COUNTERWEIGHT TO REMAIN. PREP AND BLAST SKIMMER WIPER ROTATING ARM AND COUNTERWEIGHT.
7. PREP AND BLAST EXTERIOR SURFACE OF 8-INCH INFLUENT SLUDGE PIPE.
8. DEMOLISH AND REMOVE EFFLUENT DROP BOX.
9. PREP AND BLAST SLUDGE SCRAPER. LATTICEWORK IS CONSTRUCTED OF 2-INCH ANGLE SECTIONS. NEOPRENE WIPERS TO REMAIN IN PLACE.
10. DEMOLISH AND REMOVE ELECTRIC MOTOR, GEAR DRIVE, AND MOUNTING PLATES. REFER TO ELECTRICAL DEMOLITION SHEETS.
11. PREP AND BLAST SCUM COLLECTOR SUPPORT FRAME.
12. DEMOLISH AND REMOVE PIPE CLAMP.
13. PREP AND BLAST PIPE SHAFT.
14. PREP AND BLAST SLUDGE HOPPER COVER.

GRAPHIC SCALE

1"=10' 0' 10' 20'

MARK	DESCRIPTION	DATE

NAVFAC

SEAL

A/E INFO

APPROVED
FOR COMMANDER NAVFAC 4-30-26

ACTIVITY
JASON ETHERIDGE,NSA,HR

SATISFACTORY TO DATE 04/14/26

DES	DRW	CHK
JBJ	JBJ	WHW

PMDM J. JONES, P.E.
BRANCH MANAGER W. WITHAM, P.E.
CHIEF ENG/ARCH J. MILLER, P.E.
FIRE PROTECTION N/A

DEPARTMENT OF THE NAVY
NAVAL FACILITIES ENGINEERING SYSTEMS COMMAND
ROICC NORFOLK

NAVAL FACILITIES ENGINEERING SYSTEMS COMMAND-MIDLANT
NORFOLK, VA

NORTHWEST ANNEX
CHESAPEAKE, VA

WWTP REPAIR CLARIFIER #2

CIVIL DEMOLIITON PLAN

SCALE: AS NOTED
EPROJECT NO.: 1743738
CONSTR. CONTR. NO. N/A
NAVFAC DRAWING NO. 12933707
SHEET 4 OF 14

CD101

DRAWFORM REVISION: 14 SEP 2023

FILE NAME: p:\\Vnorthwest\building\0240 wwtp\2026_1743738_wwtp_repair_clarifier_2\B_Design\DWGS\Sheet\05_CIVIL\D_CS_Sheets.dwg PLOTTED: Thursday, April 30, 2026 12:22:21 PM USER: lizanetta.coman-kgo

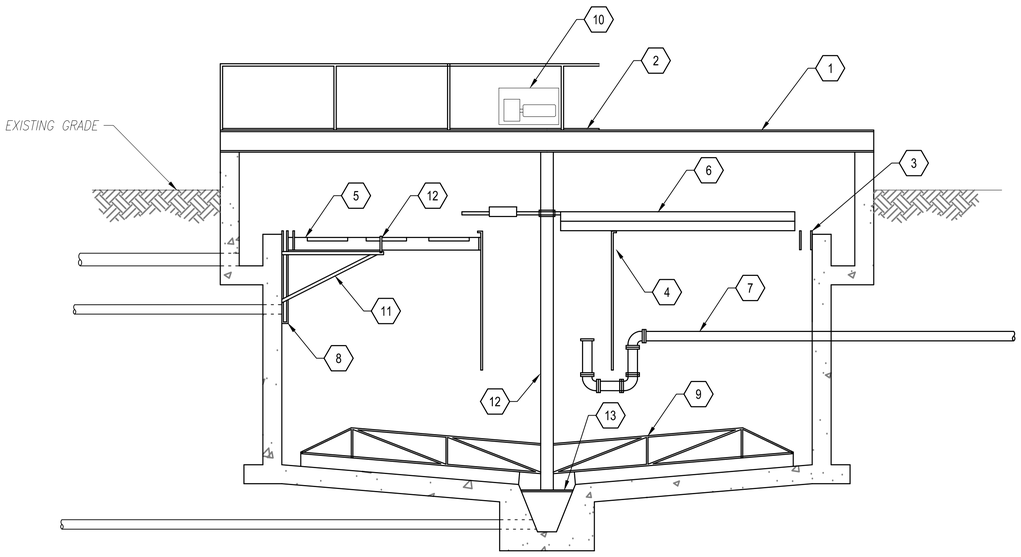

SECTION VIEW: CLARIFIER #2 NEW WORK

SCALE: 1" = 10'

MANUFACTURER REPLACEMENT PARTS

1. CLARIFIER #1 WAS OVERHAULED IN 2023. THE REPLACEMENT PARTS WERE SUPPLIED BY REBUILD-IT SERVICES GROUP, A SENTRY EQUIPMENT COMPANY.
2. DIMENSIONS AND CONFIGURATIONS OF THE REPLACEMENT PARTS ARE DETAILED ON SHEETS CS501, CS502, AND CS503. ALL DIMENSIONS MUST BE VERIFIED UPON THE GOVERNMENT EMPTYING THE CLARIFIER FOR COMMENCEMENT OF WORK.

NEW WORK KEYNOTES

1. PAINT (2) SUPPORT BEAMS AND FOUNDATION BOLTS.
2. PAINT STEEL DECKING, KICK PLATE, AND HARDWARE. LIMITS OF PAINTING ARE 6-INCHES ABOVE THE GRATING.
3. PAINT PERIMETER WEIR RINGS, SUPPORT FRAMES AND HARDWARE.
4. PAINT INFLUENT BAFFLE.
5. PROVIDE NEW PAINTED SCUM COLLECTOR AND HARDWARE, SEE SHEET CS502 DETAIL.
6. PROVIDE NEW NEOPRENE SKIMMER WIPER AND MOUNTING HARDWARE. SEE SHEET CS503 DETAIL. PAINT SUPPORT ARM AND COUNTERWEIGHT.
7. PAINT EXTERIOR SURFACE OF 8-INCH INFLUENT SLUDGE PIPE.
8. PROVIDE NEW PAINTED EFFLUENT DROP BOX, GASKETS, AND MOUNTING HARDWARE. SEE SHEET CS502. PROVIDE RTV SEALANT AROUND EDGES.
9. PAINT SLUDGE SCRAPER.
10. PROVIDE NEW ELECTRIC MOTOR, GEAR DRIVE, AND MOUNTING PLATES. REFER TO ELECTRICAL NEW WORK SHEETS.
11. PAINT SCUM COLLECTOR SUPPORT FRAME. PROVIDE NEW SUPPORT CLAMP.
12. PAINT PIPE SHAFT.
13. PAINT SLUDGE HOPPER COVER.

PAINT SPECIFICATIONS

COATING SYSTEM:

1. PRIME COAT, SHERWIN WILLIAMS (OR EQUAL) MACROPOXY 646 FAST CURE EPOXY, APPLIED AT 4 MILS DFT
2. INTERMEDIATE COAT, SHERWIN WILLIAMS (OR EQUAL) MACROPOXY 646 FAST CURE EPOXY, APPLIED AT 4 MILS DFT
3. FINISH FOR SUBMERGED METAL, SHERWIN WILLIAMS (OR EQUAL) MACROPOXY 646 FAST CURE EPOXY, APPLIED AT 4 MILS DFT
4. FINISH FOR ATMOSPHERIC METAL, SHERWIN WILLIAMS (OR EQUAL) 218 HI-SOLIDS POLYURETHANE, APPLIED AT 43-4 MILS DFT
5. COLOR TO MATCH ADJACENT CLARIFIER METAL SURFACES

GRAPHIC SCALE

1"=10' 0' 10' 20'

MARK	DESCRIPTION	DATE

NAVFAC

SEAL

A/E INFO

APPROVED

FOR COMMANDER NAVFAC 4-30-26

ACTIVITY: JASON ETHERIDGE,NSA,HR

SATISFACTORY TO DATE 04/14/26

DES JBJ | DRW JBJ | CHK WHW

PM/DM J. JONES, P.E.

BRANCH MANAGER W. WITHAM, P.E.

CHIEF ENG/ARCH J. MILLER, P.E.

FIRE PROTECTION N/A

DEPARTMENT OF THE NAVY
NAVAL FACILITIES ENGINEERING SYSTEMS COMMAND
NAVAL FACILITIES ENGINEERING SYSTEMS COMMAND-MIDLANT
ROICC NORFOLK NORFOLK, VA

NORTHWEST ANNEX CHESAPEAKE, VA

WWTP REPAIR CLARIFIER #2

CIVIL NEW WORK PLAN

SCALE: AS NOTED

EPROJECT NO.: 1743738

CONSTR. CONTR. NO. N/A

NAVFAC DRAWING NO. 12933708

SHEET 5 OF 14

CS101

DRAWFORM REVISION: 14 SEP 2023

FILE NAME: p:\IA\northwest\buildings\0240 wwtp\2026_1743738_wwtp_repair_clarifier_2\B_Design\DWGS\Sheet\05_CIV\CQ_CS_Series.dwg PLOTTED: Thursday, April 30, 2026 12:22:26 PM USER: luanette.roman-kgo

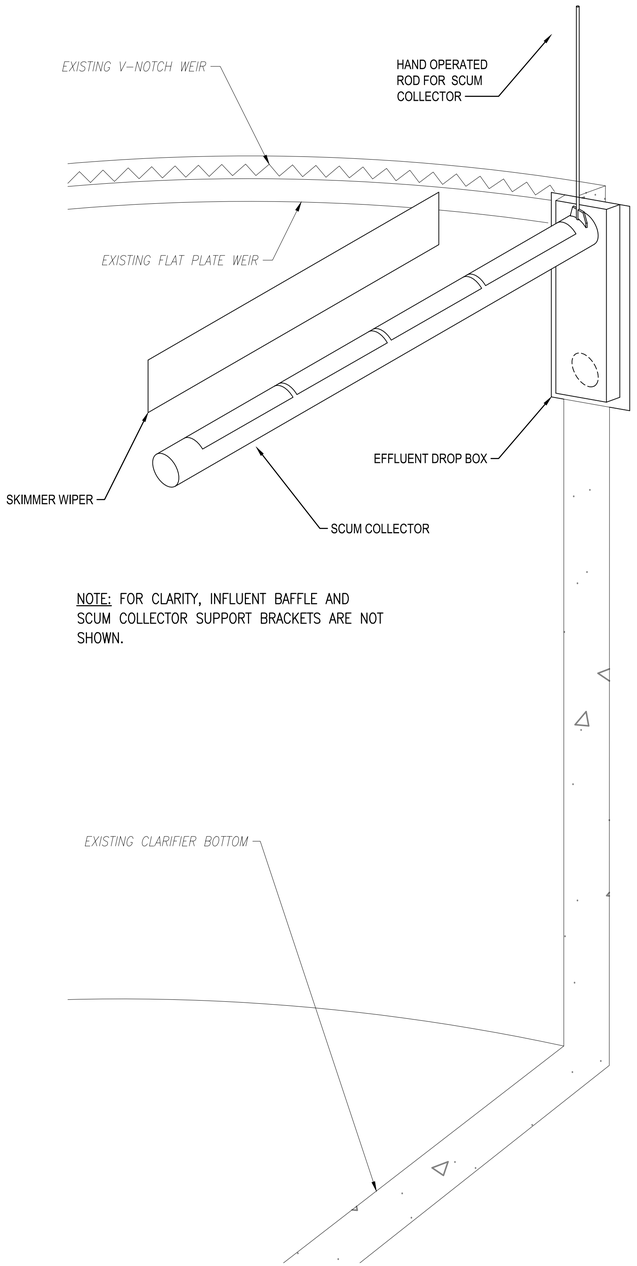

NOTE: FOR CLARITY, INFLUENT BAFFLE AND SCUM COLLECTOR SUPPORT BRACKETS ARE NOT SHOWN.

ISOMETRIC VIEW: SCUM COLLECTOR AND EFFLUENT DROP BOX

SCALE: 1" = 20'

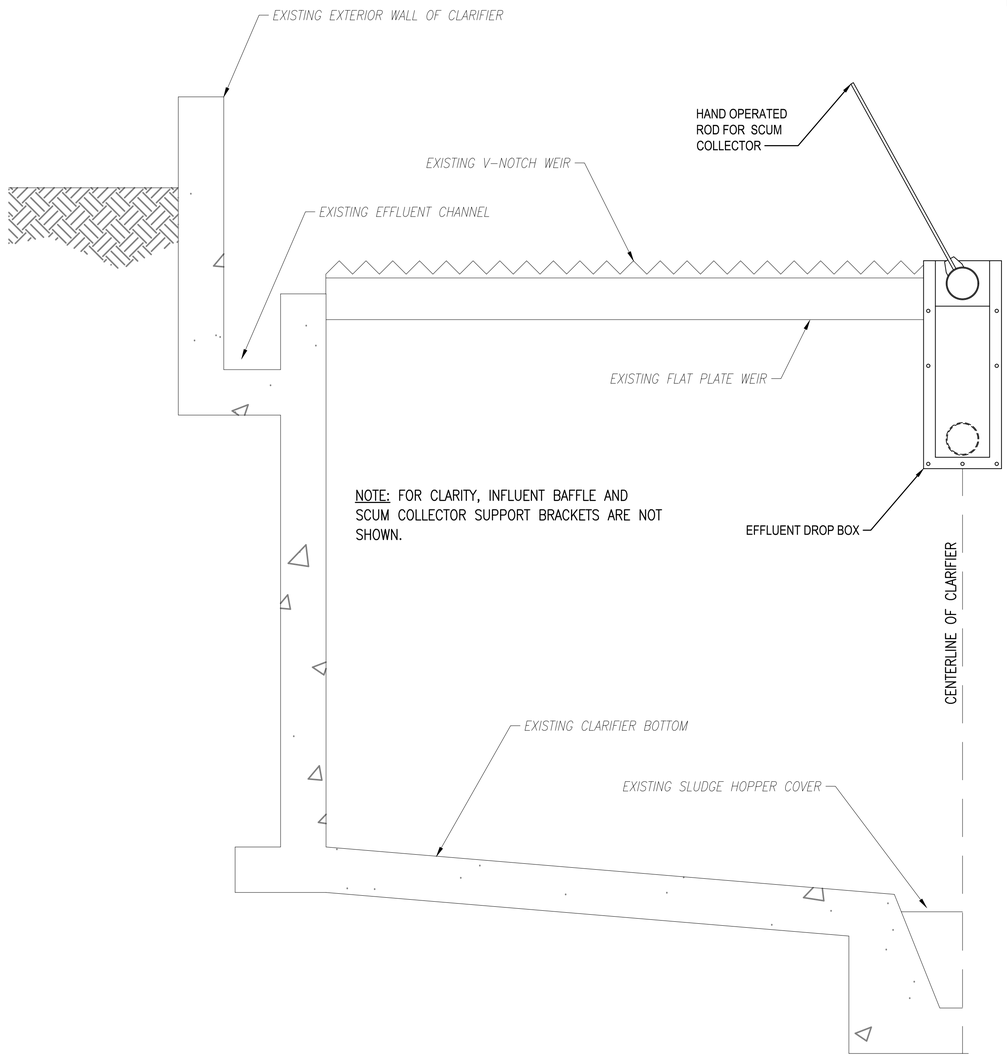

NOTE: FOR CLARITY, INFLUENT BAFFLE AND SCUM COLLECTOR SUPPORT BRACKETS ARE NOT SHOWN.

SECTION VIEW: SCUM COLLECTOR AND EFFLUENT DROP BOX

SCALE: 1" = 20'

NOTES

1. ISOMETRIC DRAWINGS ARE INTENDED TO ILLUSTRATE THE ORIENTATION OF NEW REPLACEMENT PARTS.
2. REFER TO DETAILS ON SHEETS CS502 AND CS503 FOR SPECIFIC PARTS AND DIMENSIONS.

GRAPHIC SCALE

1"=20' 0' 20' 40'

MARK	DESCRIPTION	DATE

NAVFAC

SEAL

A/E INFO

APPROVED

FOR COMMANDER NAVFAC 4.30.26

ACTIVITY: JASON ETHERIDGE,NSA,HR

SATISFACTORY TO DATE 04/14/26

DES	DRW	CHK
JBJ	JBJ	WHW

PM/DM	J. JONES, P.E.
BRANCH MANAGER	W. WITHAM, P.E.
CHIEF ENG/ARCH	J. MILLER, P.E.
FIRE PROTECTION	N/A

DEPARTMENT OF THE NAVY
NAVAL FACILITIES ENGINEERING SYSTEMS COMMAND
ROICC NORFOLK

NAVAL FACILITIES ENGINEERING SYSTEMS COMMAND-MIDLANT
NORFOLK, VA

NORTHWEST ANNEX
CHESAPEAKE, VA

WWTP REPAIR CLARIFIER #2

CIVIL DETAILS

SCALE: AS NOTED
EPROJECT NO.: 1743738
CONSTR. CONTR. NO.: N/A
NAVFAC DRAWING NO.: 12933709
SHEET 6 OF 14

CS501

DRAWFORM REVISION: 14 SEP 2023

FILE NAME: p:\WA\northwest\buildings\0240 wwtp\2026_1743738_wwtp_repair_clarifier_2\8_Design\DWGS\Sheet\05_CIVIL\CS_Series.dwg PLOTTED: Thursday, April 30, 2026 12:22:31 PM USER: luanette.roman-kgo

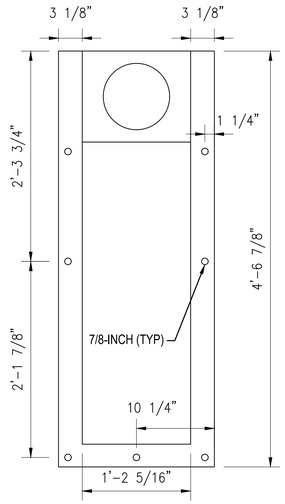

EFFLUENT DROP BOX: SIDE VIEW

SCALE: 1" = 10'

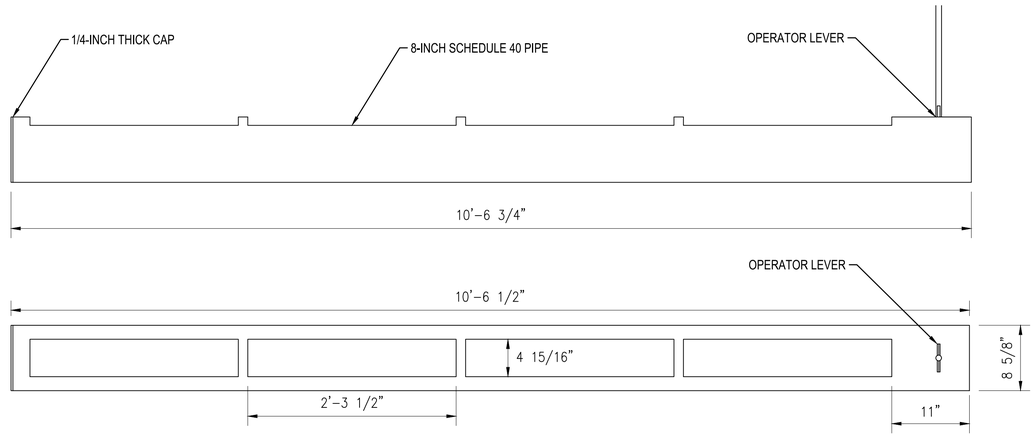

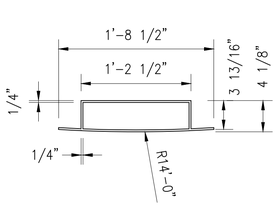

EFFLUENT DROP BOX: TOP VIEW

SCALE: 1" = 10'

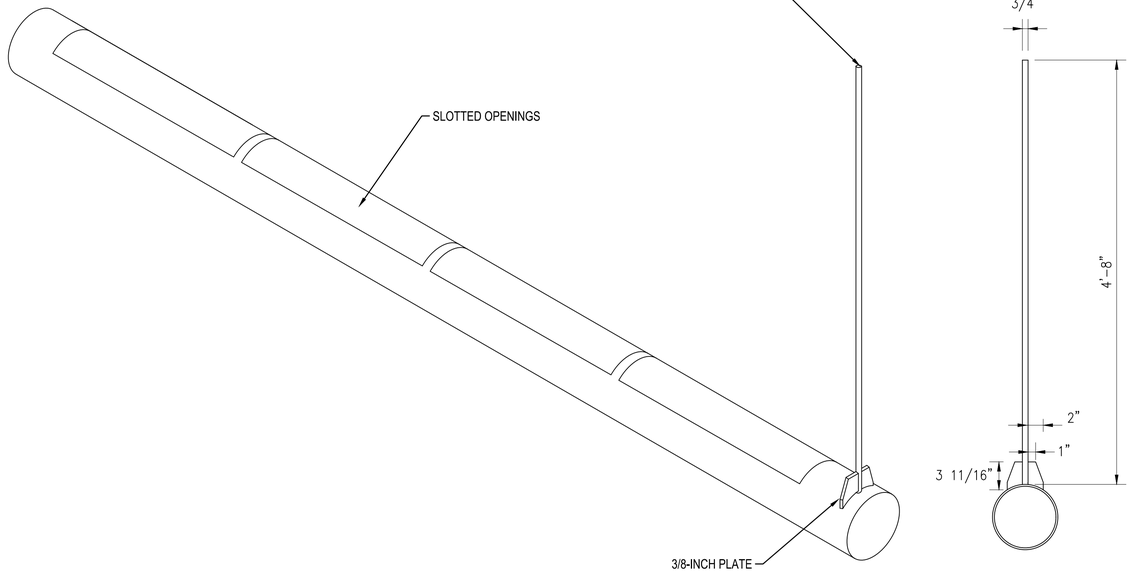

ROTATING SCUM TROUGH

SCALE: 1" = 10'

CLARIFIER #1 EFFLUENT DROP BOX (POST-REPAIRS)

NO SCALE

NOTE: DEPICTIONS OF CLARIFIER #1 ARE INTENDED FOR INFORMATIONAL PURPOSES ONLY, AS THESE ARE THE ONLY EMPTY CLARIFIER PHOTOS AVAILABLE AT THE NORTHWEST WWTP.

MATERIAL NOTES FOR SHEET CS502

1. EFFLUENT DROP BOX: A36 STEEL, 1/4-INCH PLATE
2. ROTATING SCUM COLLECTOR: A53 GRADE B STEEL
3. SCUM COLLECTOR HAND OPERATOR ROD & SUPPORT PLATES: A36 STEEL

FASTENER SCHEDULE FOR SHEET CS502

1. EFFLUENT DROP BOX FASTENERS: 304 SS: REUSE EXISTING ANCHOR BOLTS. CONFIRM EXISTING BOLT PATTERN MATCHES NEW TEMPLATE. FASTEN WITH 3/4-10 UNC WASHERS & HEX NUTS.

GRAPHIC SCALE

1"=10' 0' 10' 20'

MARK	DESCRIPTION	DATE

NAVFAC

SEAL

A/E INFO

APPROVED

FOR COMMANDER NAVFAC 4-30-26

ACTIVITY: JASON ETHERIDGE,NSA,HR

SATISFACTORY TO DATE 04/14/26

DES JBJ | DRW JBJ | CHK WHW

PM/DM J. JONES, P.E.

BRANCH MANAGER W. WITHAM, P.E.

CHIEF ENG/ARCH J. MILLER, P.E.

FIRE PROTECTION N/A

DEPARTMENT OF THE NAVY NAVAL FACILITIES ENGINEERING SYSTEMS COMMAND

NAVAL FACILITIES ENGINEERING SYSTEMS COMMAND~MIDLANT

ROICC NORFOLK NORFOLK, VA

NORTHWEST ANNEX CHESAPEAKE, VA

WWTP REPAIR CLARIFIER #2

CIVIL DETAILS

SCALE: AS NOTED

EPROJECT NO.: 1743738

CONSTR. CONTR. NO. N/A

NAVFAC DRAWING NO. 12933710

SHEET 7 OF 14

CS502

DRAWFORM REVISION: 14 SEP 2023

FILE NAME: p:\1\Northwest\buildings\0240 wwtp\2026_1743738_wwtp_repair_clarifier_2\B_Design\DWGS\Sheet\05_CIV\CD_CS_Series.dwg PLOTTED: Thursday, April 30, 2026 12:22:36 PM USER: luanette.roman-lugo

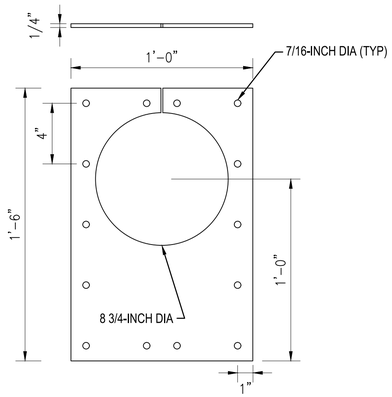

SCUM TROUGH WEIR SEAL

SCALE: 1" = 5'

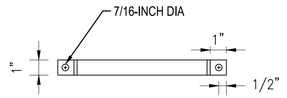

PLAN VIEW

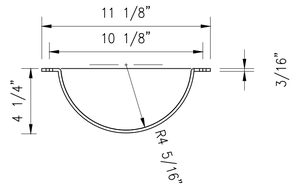

SECTION VIEW

PIPE CLAMP FOR SCUM COLLECTOR

SCALE: 1" = 5'

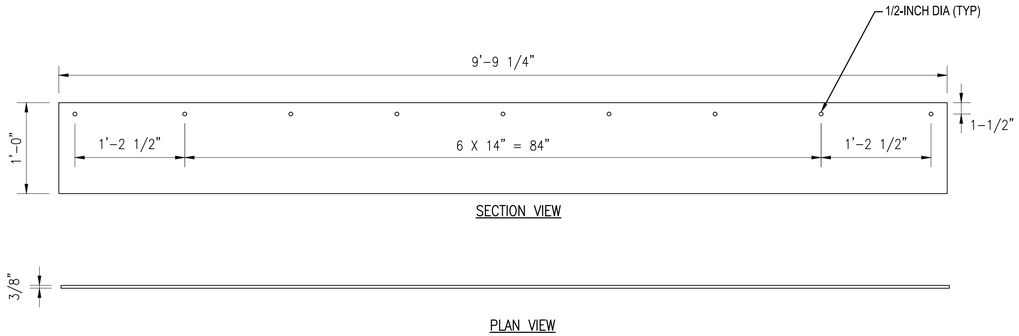

SECTION VIEW

PLAN VIEW

SKIMMER WIPER

SCALE: 1" = 10'

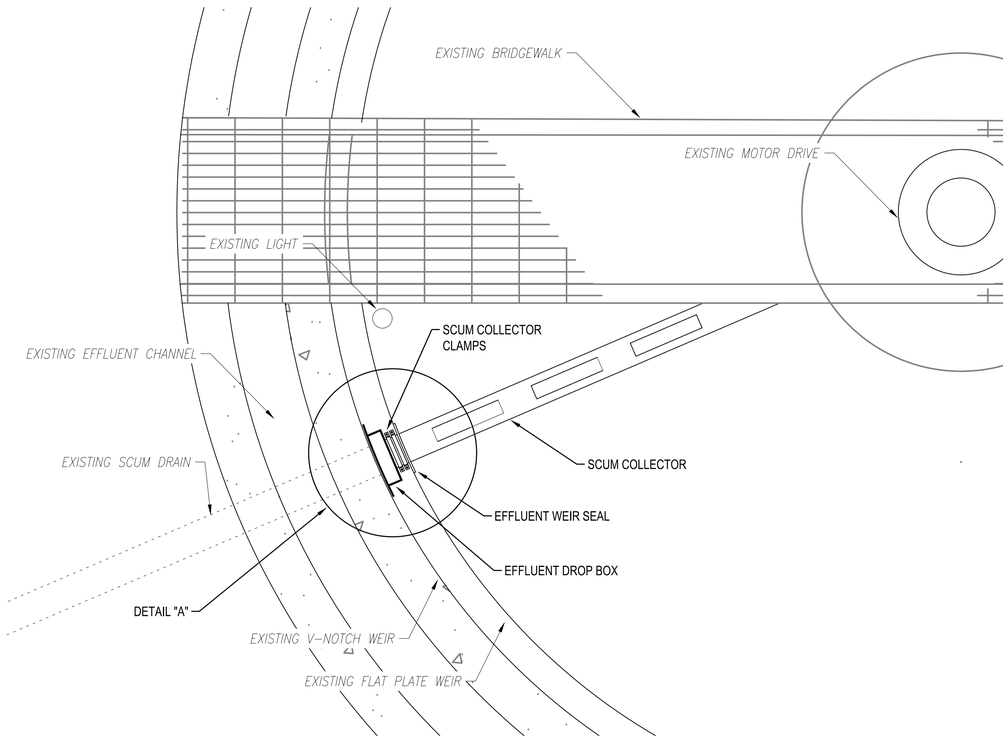

SCUM COLLECTION & EFFLUENT DROP BOX ASSEMBLY

SCALE: 1" = 20'

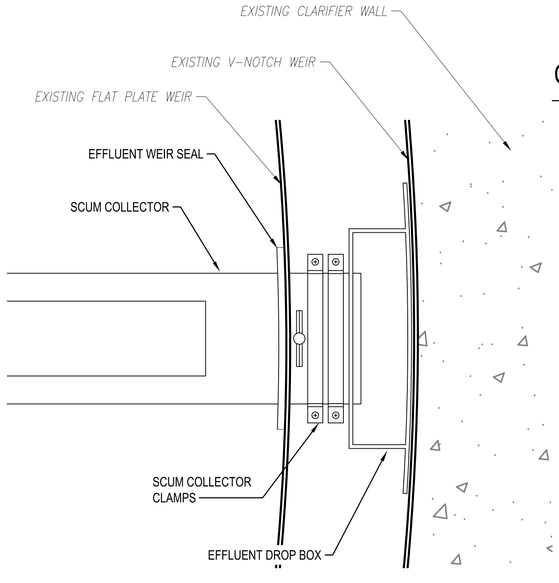

DETAIL "A"

SCALE: 1" = 5'

MATERIAL NOTES FOR SHEET CS503

1. PIPE CLAMP: 304 SS BAR, 3/16–INCH THICK
2. SCUM TROUGH WEIR SEAL: NEOPRENE 60 DUR.
3. SKIMMER WIPER: NEOPRENE 60 DUR.

FASTENER SCHEDULE FOR SHEET CS503

1. PIPE CLAMP FASTENERS: 304 SS, 3/8–16 UNC CAPSCREWS (1–1/2–INCH LONG) & HEX NUTS
2. SKIMMER WEIR SEAL FASTENERS: 304 SS, 3/8–16 CAPSCREWS (1–3/8–INCH LONG), DOUBLE WASHERS & HEX NUTS
3. SKIMMER WIPER FASTENERS: 304 SS, 3/8–16 UNCH CAPSCREWS (1–3/8–INCH LONG) AND HEX NITS

CLARIFIER #1 EFFLUENT DROP BOX (POST-REPAIRS)

NO SCALE

NOTE: DEPICTIONS OF CLARIFIER #1 ARE INTENDED FOR INFORMATIONAL PURPOSES ONLY, AS THESE ARE THE ONLY EMPTY CLARIFIER PHOTOS AVAILABLE AT THE NORTHWEST WWTP.

GRAPHIC SCALE

1"=5' 0' 5' 10'

1"=20' 0' 20' 40'

MARK	DESCRIPTION	DATE

NAVFAC

A/E INFO

APPROVED

FOR COMMANDER NAVFAC 4.30.26

ACTIVITY: JASON ETHERIDGE,NSA,HR

SATISFACTORY TO DATE 04/14/26

DES	JBJ	DRW	JBJ	CHK	WHW

PM/DM	J. JONES, P.E.
BRANCH MANAGER	W. WITHAM, P.E.
CHIEF ENG/ARCH	J. MILLER, P.E.
FIRE PROTECTION	N/A

DEPARTMENT OF THE NAVY
NAVAL FACILITIES ENGINEERING SYSTEMS COMMAND
NAVAL FACILITIES ENGINEERING SYSTEMS COMMAND–MIDLANT
NORFOLK, VA
ROICC NORFOLK

NORTHWEST ANNEX — CHESAPEAKE, VA

WWTP REPAIR CLARIFIER #2

CIVL DETAILS

SCALE:	AS NOTED
EPROJECT NO.:	1743738
CONSTR. CONTR. NO.	N/A
NAVFAC DRAWING NO.	12933711
SHEET	8 OF 14

CS503

DRAWFORM REVISION: 14 SEP 2023

FILE NAME: g:\WA\northwest\buildings\0240 wwtp\2008_1743738_wwtp_repair_clarifier_2\8_Design\DWGS\Sheet\05_CIVIL\CD_CS_Series.dwg PLOTTED: Thursday, April 30, 2026 12:22:41 PM USER: lisanette.roman-lugo

CLARIFIER #2 (SLUDGE PUMP STATION IN FOREGROUND)

NO SCALE

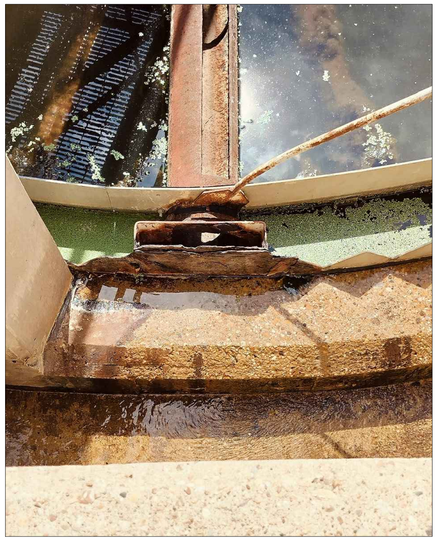

CLARIFIER #2 EFFLUENT DROP BOX

NO SCALE

CLARIFIER #2 EFFLUENT DROP BOX GASKET

NO SCALE

CLARIFIER #2 ACCESS STEPS TO BRIDGEWALK

NO SCALE

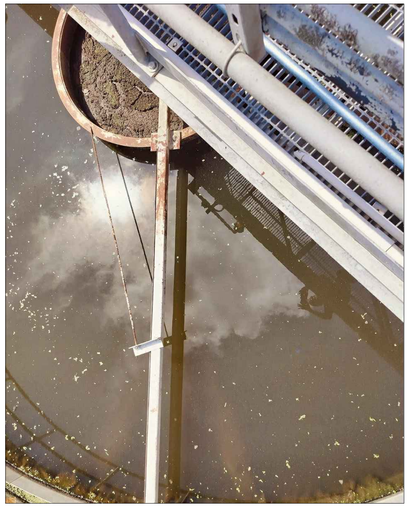

CLARIFIER #2 SKIMMER ASSEMBLY

NO SCALE

CLARIFIER #2 MOTOR DRIVE

NO SCALE

CLARIFIER #2 EFFLUENT WEIRS

NO SCALE

CLARIFIER #2 CURRENT CONDITIONS

MARK	DESCRIPTION	DATE

NAVFAC

SEAL

A/E INFO

APPROVED

FOR COMMANDER NAVFAC 4-30-26

ACTIVITY

JASON ETHERIDGE,NSA,HR

SATISFACTORY TO DATE 04/14/26

DES	JBJ	DRW	JBJ	CHK	WHW

PM/DM J. JONES, P.E.

BRANCH MANAGER W. WITHAM, P.E.

CHIEF ENG/ARCH J. MILLER, P.E.

FIRE PROTECTION N/A

DEPARTMENT OF THE NAVY
NAVAL FACILITIES ENGINEERING SYSTEMS COMMAND
NAVAL FACILITIES ENGINEERING SYSTEMS COMMAND~MIDLANT
ROICC NORFOLK NORFOLK, VA

NORTHWEST ANNEX CHESAPEAKE, VA

WWTP REPAIR CLARIFIER #2

CIVIL PHOTOGRAPHIC PLAN

SCALE: AS NOTED

EPROJECT NO.: 1743738

CONSTR. CONTR. NO. N/A

NAVFAC DRAWING NO. 12933712

SHEET 9 OF 14

C-901

DRAWFORM REVISION: 14 SEP 2023

FILE NAME: p:\IVA\northwest\buildings\0240 wwtp\2026_1743738_wwtp_repair_clarifier_2\B_Design\DWGS\Sheet\05_CIV\CD_CS_Series.dwg PLOTTED: Thursday, April 30, 2026 12:22:46 PM USER: luanette.roman-lugo

SYMBOLS LEGEND

GENERAL

⟨1⟩ DEMOLITION/NEW WORK NOTE TAG – REFER TO "DEMOLITION KEYNOTES" FOR EACH SHEET

POWER

ELECTRICAL PANELBOARD (480/277V).

ELECTRICAL PANELBOARD (120/208V).

NON-FUSED DISCONNECT SWITCH

ABBREVIATIONS

1/C	ONE CONDUCTOR
AFF	ABOVE FINISHED FLOOR
AFG	ABOVE FINISHED GRADE
ARCI	ARC-FAULT CIRCUIT INTERRUPTER
ARF	ABOVE RAISED FLOOR
BKR	BREAKER
C	CONDUIT
CB	CIRCUIT BREAKER
CKT	CIRCUIT
DWG	DRAWING
EA	EACH
EC	EMPTY CONDUIT
ELEC	ELECTRICAL
EMT	ELECTRICAL METALLIC TUBING
ENCL	ENCLOSURE
EQUIP	EQUIPMENT
EWC	ELECTRIC WATER COOLER
EWH	ELECTRIC WATER HEATER
EXIST	EXISTING
EXP	EXPLOSION PROOF EQUIPMENT
FCU	FAN COIL UNIT
FT	FEET
GFCI	GOVERNMENT FURNISHED CONTRACTOR INSTALLED
GFE	GOVERNMENT FURNISHED EQUIPMENT
GFGI	GOVERNMENT FURNISHED GOVERNMENT INSTALLED
GFI	GROUND FAULT INTERRUPTER
GND	GROUND
HGT	HEIGHT
HH	HANDHOLE
HID	HIGH INTENSITY DISCHARGE
HUB	COMPUTER DISTRIBUTION HUB
LTS	LIGHTS
MCB	MAIN CIRCUIT BREAKER
MDP	MAIN DISTRIBUTION PANEL
MECH	MECHANICAL
MH	MANHOLE
MLO	MAIN LUGS ONLY
MTD	MOUNTED
MTG HT	MOUNTING HEIGHT
NEC	NATIONAL ELECTRICAL CODE
NIC	NOT IN CONTRACT
NL	NIGHT LIGHT
NTS	NOT TO SCALE
OBI	OUTLET BASE INFEED
PNL	PANEL
PNLBD	PANELBOARD
PVC	POLYVINYL CHLORIDE CONDUIT
QU	QUANTITY
REC	RECEPTACLE
REQ' D	REQUIRED
RGS	RIGID GALVANIZED STEEL
RM	ROOM
SHT	SHEET
SUB	SUBSTATION
T	TELEPHONE
TYP	TYPICAL
UG	UNDERGROUND
UON	UNLESS OTHERWISE NOTED
W	WIRE
WP	WEATHERPROOF
WW	WIREWAY (TROUGH)
X	IN SCHEDULES, ITEM NOT APPLICABLE
XFMR	TRANSFORMER

GENERAL NOTES

1. AN EQUIPMENT GROUND WIRE SHALL BE RUN WITH ALL FEEDERS AND BRANCH CIRCUITS.

2. ALL WIRING SHALL BE THWN/THHN, UON. ELECTRICAL WORK SHALL BE DONE AS PER 2014 NATIONAL ELECTRICAL CODE (NEC).

3. ALL ELECTRICAL EQUIPMENT SHALL BE IDENTIFIED AND LABELED. ALL FEEDERS/CIRCUITS SHALL BE IDENTIFIED AT EACH END OF THE WIRE AND AT EVERY SPLICE OR JUNCTION/PULL BOX.

4. PROVIDE NAMEPLATES ON THE EXTERIOR OF ALL ELECTRICAL PANELS AND ENCLOSURES AS FOLLOWS:

PANEL LP1A 100A, 120/208V-3ø, 4W FEEDS FROM PANEL MDP INSTALLED 1996 DRAWING NO. 15,350	DEVICE I.D. DEVICE RATING POWER SOURCE INSTALLATION DATE NAVFAC DRAWING NUMBER

FOR DISCONNECT SWITCHES AND MOTOR STARTERS THE TOP LINE SHALL BE THE NAME/DESIGNATION OF EQUIPMENT BEING FED BY SAME.

5. PROVIDE NEW TYPED DIRECTORIES FOR ALL PANELS (NEW OR EXISTING) INCLUDED IN THIS PROJECT.

6. DRAWINGS ARE BASED ON EXISTING BUILDING PLANS AND FIELD INVESTIGATIONS. CONTRACTOR SHALL VISIT THE EXISTING BUILDING AND ACQUAINT HIMSELF/HERSELF WITH THE EXISTING FIELD CONDITIONS. CONTRACTOR SHALL EXAMINE ALL DRAWINGS TO AVOID CONFLICT.

7. ALL NEW RECEPTACLES/SWITCHES SHALL BE RECESSED WHERE POSSIBLE; ALL CONDUIT/WIRING SHALL BE CONCEALED WHERE POSSIBLE.

8. COORDINATE WITH ARCHITECTURAL, MECHANICAL AND CIVIL DRAWINGS FOR EXACT FIXTURE LOCATIONS.

9. COORDINATE ELECTRICAL WORK WITH ARCHITECTURAL, MECHANICAL AND FIRE PROTECTION WORK PRIOR TO FABRICATION AND INSTALLATION TO PREVENT CONFLICTS. NOTIFY CONTRACTING OFFICER WHERE CONFLICTS ARE DISCOVERED PRIOR TO CONSTRUCTION AND BEFORE BEGINNING WORK IN THOSE AREAS. ALL CONFLICTS THAT ARISE DUE TO LACK OF COORDINATION SHALL BE RECTIFIED BY THE CONTRACTOR AT NO COST TO THE GOVERNMENT.

10. BRANCH CIRCUITS CONSIST OF 2-#12 & 1-#12 GND. IN 1/2" C, UNLESS OTHERWISE NOTED.

12. COORDINATE SIZE OF LIGHTING FIXTURE WITH LAMP DIMENSIONS.

13. CONTRACTOR SHALL EXTEND EXISTING CIRCUITS AS REQUIRED TO ACCOMMODATE EQUIPMENT'S NEW LOCATION.

14. PROVIDE ARC-FLASH LABELS ON ALL PANELS/DISCONNECT SWITCHES AS PER UFC 3-560-01 AND NFPA 70E. SEE DETAIL PLATE ON SHEET E-001.

GENERAL DEMOLITION NOTES

1. ALL EQUIPMENT SHOWN WITH DASHED LINE SHALL BE REMOVED, UON.

2. ALL WIRING TO EQUIPMENT SHALL BE REMOVED, UON.

3. ALL BOXES DISCONTINUED SHALL BE BLANKED OFF OR REMOVED AND DEVICES REMOVED.

5. EXISTING ELECTRICAL EQUIPMENT NOT INDICATED ON DEMOLITION PLAN SHALL REMAIN CONNECTED FOR CONTINUED USE.

6. CONTRACTOR SHALL RECONNECT ANY EXISTING CIRCUIT (INTERRUPTED BY REMOVAL OF AN EXISTING DEVICE) TO THE REMAINING ELECTRICAL EQUIPMENT LOCATED DOWNSTREAM FROM THE POINT OF INTERRUPTION.

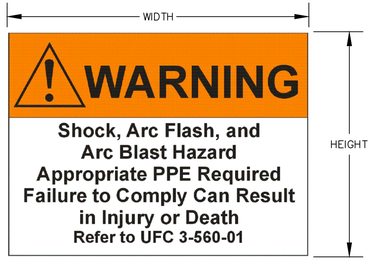

NOTES:

1. PROVIDE SELF-ADHESIVE VINYL LABEL TO AFFIX TO ELECTRICAL EQUIPMENT TO WARN OF ARC FLASH HAZARDS.
2. THE LABEL FORMAT AND TEXT SHALL BE IN ACCORDANCE WITH THE FIGURE.
3. THE LABEL SHALL BE LOCATED ON THE EQUIPMENT TO BE CLEARLY VISIBLE TO QUALIFIED PERSONS BEFORE EXAMINATION, ADJUSTMENT, SERVICING, OR MAINTENANCE OF THE EQUIPMENT.
4. THE SIZE OF THE LABEL SHALL BE MINIMUM:

EQUIPMENT TYPE	HEIGHT	WIDTH
INDOOR	2"	3"
OUTDOOR	3"	4.5"

5. A DOWNLOADABLE WINDOWS METAFILE IS AVAILABLE ON THE WHOLE BUILDING DESIGN GUIDE WEBSITE (WWW.WDBG.ORG) FOR USE IN A LABEL MAKING MACHINE.
   A. THE FILE IS LOCATED ON THE "NAVFAC CADD DETAILS" PAGE. TO NAVIGATE TO THIS LOCATION, FOLLOW: HOME > DOCUMENTS & REFERENCES > CCB > CADD LIBRARY > NAVFAC CADD RESOURCES > NAVFAC CADD DETAILS.
   B. ALTERNATIVELY, TYPE IN THE FOLLOWING ADDRESS IN INTERNET EXPLORER: HTTP://WWW.WBDG.ORG/CCB/BROWSE_CAT.PHP?C=232

GENERAL ARC FLASH WARNING LABEL

SKETCH DATE APRIL 2015 STYLE AF-1

DATE | DESCRIPTION | MARK

NAVFAC

SEAL

A/E INFO

APPROVED

FOR COMMANDER NAVFAC 4.30.25

ACTIVITY

JASON ETHERIDGE,NSA,HR

SATISFACTORY TO DATE 04/14/26

DES	JMC	DRW	JMG	CHK	DNB

PM/DM J. JONES, P.E.

BRANCH MANAGER C. MORTON, P.E.

CHIEF ENG/ARCH J. MILLER, P.E.

FIRE PROTECTION N/A

DEPARTMENT OF THE NAVY
NAVAL FACILITIES ENGINEERING SYSTEMS COMMAND
ROICC NORFOLK

NAVAL FACILITIES ENGINEERING SYSTEMS COMMAND-MIDLANT
NORFOLK, VA

NORTHWEST ANNEX
CHESAPEAKE, VA

WWTP REPAIR CLARIFIER #2

ELECTRICAL SYMBOLS, LEGEND, ABBREVIATIONS, & NOTES

SCALE: AS NOTED

EPROJECT NO.: 1743738

CONSTR. CONTR. NO. N/A

NAVFAC DRAWING NO. 12933713

SHEET 10 OF 14

E-001

DRAWFORM REVISION: 14 SEP 2023

FILE NAME: p:\Vn\northwest\buildings\0240 wwtp\2026_1743738_wwtp_repair_clarifier_2\6_Design\DWGS\Sheet\13_ELEC\ED_ES_Series.dwg PLOTTED: Thursday, April 30, 2026 12:22:55 PM USER: kanette.coman4vgo

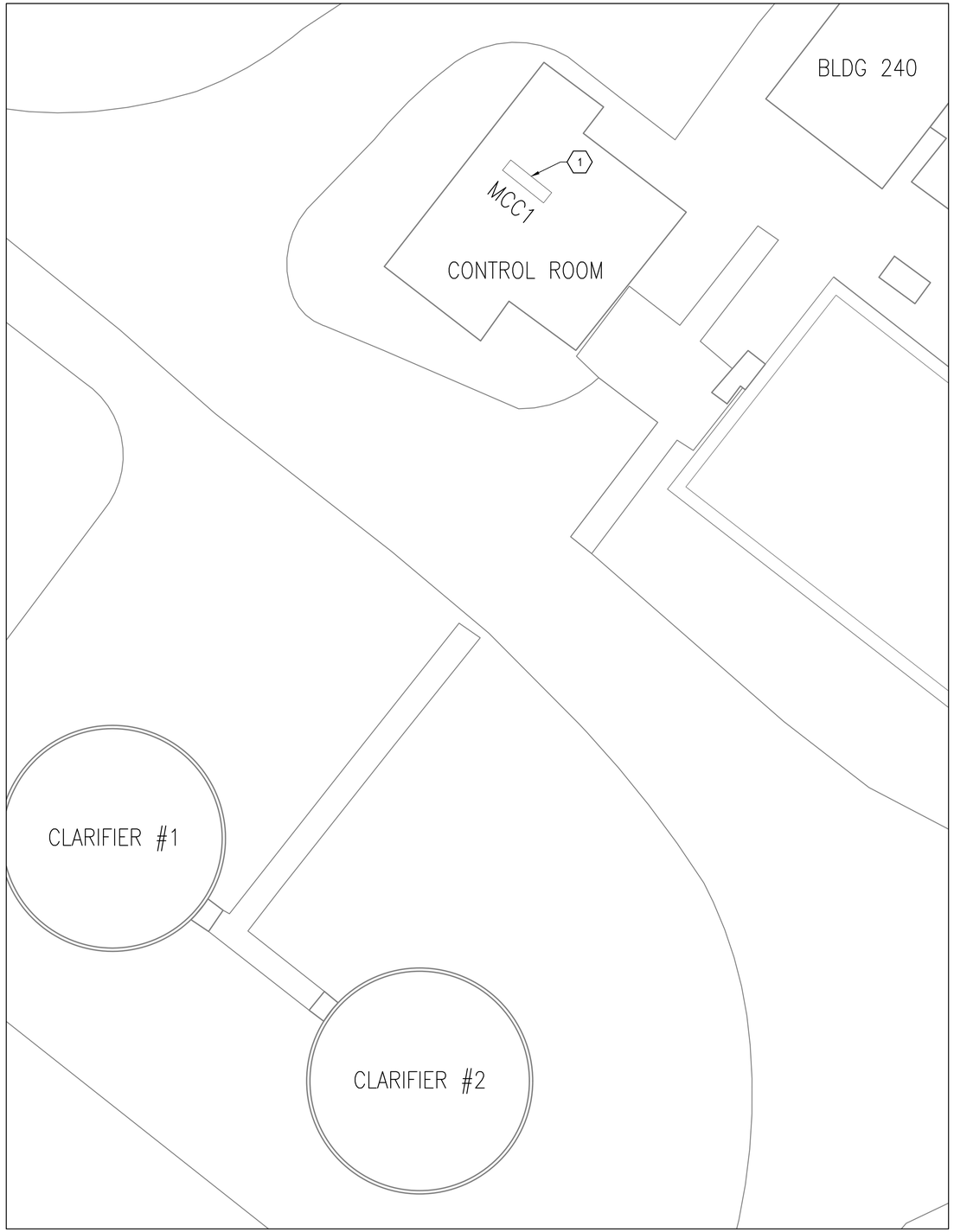

ELECTRICAL EXISTING CONDITIONS PLAN

SCALE: 1" = 10'

BUCKET NO, D-2

NOT TO SCALE

MOTOR CONTROL CENTER "MCC1"

NOT TO SCALE

MAIN CB FOR PNL LA	SPARE	P-7 SLUDGE RETURN PUMP	M-4 FLOCCULATOR
	P-13 FILTER SERVICE PUMP	P-8 SLUDGE RETURN PUMP	M-1 FLASH MIXER
PNL LA 208V 3ø	P-5 EFFLUENT PUMP	D-1 CIRC CLARIFIER NO. 1 PUMP	M-2 FLASH MIXER
	P-6 EFFLUENT PUMP	D-2 CIRC CLARIFIER NO. 1 PUMP	B-6 POST AERATION BLOWER
	P-3 CHEMICAL EQUALIZATION PUMP	P-11 FROTH PUMP	B-7 POST AERATION BLOWER
	P-4 CHEMICAL EQUALIZATION PUMP	P-9 LOW POINT DRAIN PUMP	B-4 CHEMICAL AERATION BLOWER
MAIN CB	SPARE	P-10 LOW POINT DRAIN PUMP	B-5 CHEMICAL AERATION BLOWER
	SPARE	M-3 FLOCCULATOR	SPACE

2

MCC1 ELEVATION

NOT TO SCALE

GENERAL SHEET NOTES

A. REFER TO SHEET E-001 FOR GENERAL DEMOLITION NOTES.

B. ALL MATERIAL REMOVED UNDER DEMOLITION MUST BECOME THE PROPERTY OF THE CONTRACTOR AND REMOVED COMPLETELY OFF-SITE UNLESS NOTED OTHERWISE.

C. CIRCUITS SHOWN ARE BASED ON FIELD WORK AND DRAWING INVESTIGATIONS. CONTRACTOR MUST VERIFY ALL CIRCUITS PRIOR TO DEMOLITION.

KEYNOTES

1. MOTOR CONTROL CENTER "MCC1" IS A 480V, 3ø, ARROW HART DISTRIBUTION ASSEMBLIES DIVISION.

2. CUBICAL NUMBER D-2 CONTROLS CLARIFIER NUMBER 2.

GRAPHIC SCALE

1"=10' 0' 10' 20'

MARK	DESCRIPTION	DATE

NAVFAC

SEAL

A/E INFO

APPROVED

FOR COMMANDER NAVFAC 4-30-26

ACTIVITY

JASON ETHERIDGE,NSA,HR

SATISFACTORY TO DATE 04/14/26

DES JMG DRW JMG CHK DNB

PM/DM J. JONES, P.E.

BRANCH MANAGER C. MORTON, P.E.

CHIEF ENG/ARCH J. MILLER, P.E.

FIRE PROTECTION N/A

DEPARTMENT OF THE NAVY NAVAL FACILITIES ENGINEERING SYSTEMS COMMAND

NAVAL FACILITIES ENGINEERING SYSTEMS COMMAND~MIDLANT

ROICC NORFOLK NORFOLK, VA

NORTHWEST ANNEX CHESAPEAKE, VA

WWTP REPAIR CLARIFIER #2

ELECTRICAL EXISTING CONDITIONS PLAN

SCALE: AS NOTED

EPROJECT NO.: 1743738

CONSTR. CONTR. NO. N/A

NAVFAC DRAWING NO. 12933714

SHEET 11 OF 14

E-101

DRAWFORM REVISION: 14 SEP 2023

FILE NAME: p:\IVA\northwest\buildings\0240 wwtp\2026_1743738_wwtp_repair_clarifier_2\B_Design\DWGS\Sheet\13_ELEC\ED_ES_Series.dwg PLOTTED: Thursday, April 30, 2026 12:22:56 PM USER: luanette.roman4.ugo

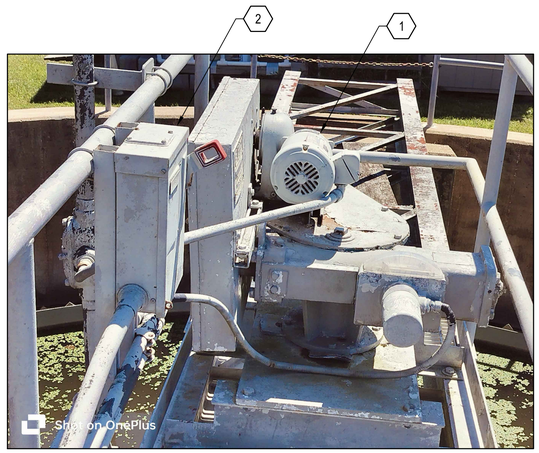

DISCONNECT AND MOTOR CONNECTION DETAIL

NOT TO SCALE

"LB" CONNECTION

NOT TO SCALE

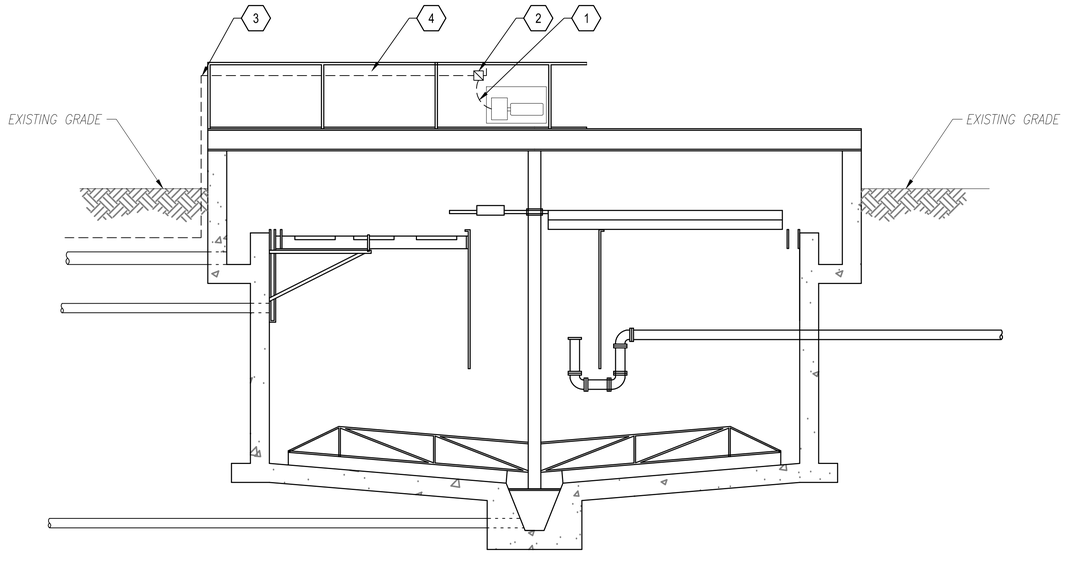

SECTION VIEW: CLARIFIER #2 DEMOLITION

SCALE: 1" = 10'

GENERAL SHEET NOTES

A. REFER TO SHEET E-001 FOR GENERAL DEMOLITION NOTES.

B. ALL MATERIAL REMOVED UNDER DEMOLITION MUST BECOME THE PROPERTY OF THE CONTRACTOR AND REMOVED COMPLETELY OFF-SITE UNLESS NOTED OTHERWISE.

C. CIRCUITS SHOWN ARE BASED ON FIELD WORK AND DRAWING INVESTIGATIONS. CONTRACTOR MUST VERIFY ALL CIRCUITS PRIOR TO DEMOLITION.

KEYNOTES

1. DEMOLISH CIRCUIT FROM MOTOR BACK TO DISCONNECT SWITCH.
2. DEMOLISH NON-FUSED DISCONNECT.
3. DEMOLISH CONDUIT FEEDING NON-FUSED DISCONNECT SWITCH BACK TO "LB" JUNCTION BOX FED FORM MOTOR CONTROL CENTER "MCC1" IN THE CONTROL ROOM. PULL CONDUCTORS BACK TO "LB" FOR USE TO NEW CONTROL PANEL. REFER TO SHEET ES103.
4. SALVAGE/PROTECT EXISTING WIRING FOR REUSE. DEMOLISH EXISTING CONDUIT.

GRAPHIC SCALE

1"=10' 0' 10' 20'

MARK	DESCRIPTION	DATE

NAVFAC

SEAL

A/E INFO

APPROVED

FOR COMMANDER NAVFAC 4.30.26

ACTIVITY

JASON ETHERIDGE,NSA,HR

SATISFACTORY TO DATE 04/14/26

DES	JMC	DRW	JMG	CHK	DNB

PM/DM J. JONES, P.E.

BRANCH MANAGER C. MORTON, P.E.

CHIEF ENG/ARCH J. MILLER, P.E.

FIRE PROTECTION N/A

DEPARTMENT OF THE NAVY
NAVAL FACILITIES ENGINEERING SYSTEMS COMMAND
ROICC NORFOLK

NAVAL FACILITIES ENGINEERING SYSTEMS COMMAND-MIDLANT
NORFOLK, VA

NORTHWEST ANNEX
CHESAPEAKE, VA

WWTP REPAIR CLARIFIER #2

ELECTRICAL DEMOLITION PLAN

SCALE: AS NOTED

EPROJECT NO.: 1743738

CONSTR. CONTR. NO. N/A

NAVFAC DRAWING NO. 12933715

SHEET 12 OF 14

ED101

DRAWFORM REVISION: 14 SEP 2023

FILE NAME: p:\VA\northwest\buildings\0240 wwtp\2026_1743738_wwtp_repair_clarifier_2\8_Design\DWGS\Sheet\13_ELEC\ED_ES_Series.dwg PLOTTED: Thursday, April 30, 2026 12:23:01 PM USER: kanette.coman4vgo

CONTROL PANEL EXTERIOR

NO TO SCALE

CONTROL PANEL INTERIOR

NOT TO SCALE

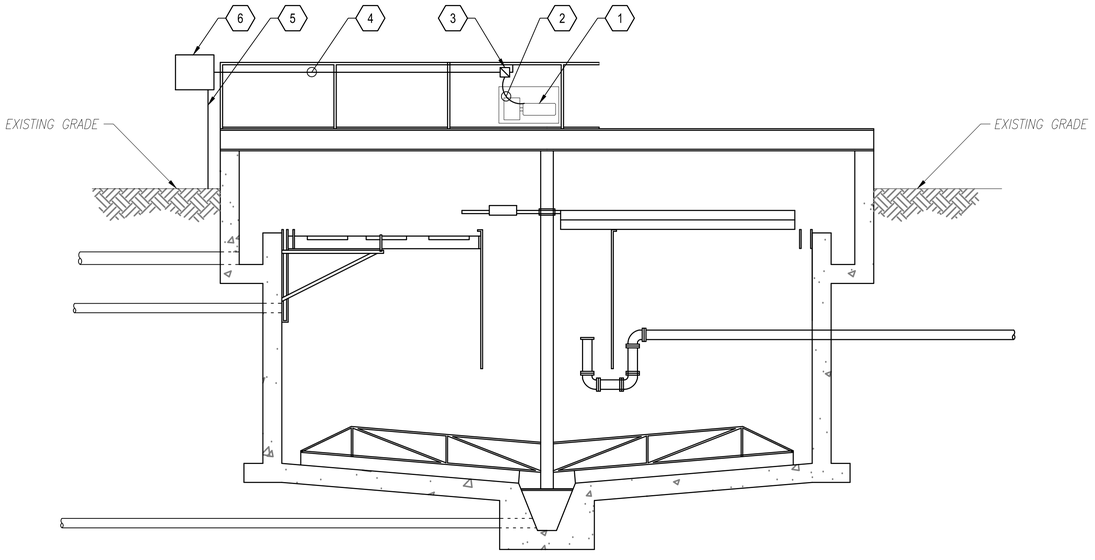

SECTION VIEW: CLARIFIER #2 NEW WORK

SCALE: 1" = 10'

GENERAL SHEET NOTES

A. REFER TO SHEET E-001 FOR GENERAL NOTES.

B. CIRCUITS SHOWN ARE BASED ON FIELD WORK AND DRAWING INVESTIGATIONS. CONTRACTOR MUST VERIFY ALL CIRCUITS PRIOR TO DEMOLITION.

KEYNOTES

1. REPLACEMENT DRIVE MOTOR: 1/2 HP, 480V, 3PH, 1.0A.
2. PROVIDE 3-#12, 1-#12GND, IN 3/4" LIQUID TIGHT FLEXIBLE CONDUIT FROM NON-FUSED DISCONNECT TO MOTOR.
3. PROVIDE A 600V, 3P, 30A, NEMA 4X NON-FUSED DISCONNECT.
4. PROVIDE 3-#12, 1-#12GND, IN 3/4" RGS CONDUIT FROM NON=FUSED DISCONNECT SWITCH TO REMOTE CONTROL PANEL.
5. PROVIDE 1" RGS FROM EXISTING "LB" JUNCTION BOX TO CONTROL PANEL ENCLOSURE.
6. EXTEND EXISTING CONDUCTORS SALVAGED FROM DEMOLITION TO OVER-CURRENT DEVICE IN CONTROL PANEL.

GRAPHIC SCALE

1"=10' 0' 10' 20'

MARK	DESCRIPTION	DATE

NAVFAC

SEAL

A/E INFO

APPROVED

FOR COMMANDER NAVFAC 4-30-26

ACTIVITY

JASON ETHERIDGE,NSA,HR

SATISFACTORY TO DATE 04/14/26

DES	DRW	CHK
JMG	JMG	DNB

PM/DM J. JONES, P.E.

BRANCH MANAGER C. MORTON, P.E.

CHIEF ENG/ARCH J. MILLER, P.E.

FIRE PROTECTION N/A

DEPARTMENT OF THE NAVY NAVAL FACILITIES ENGINEERING SYSTEMS COMMAND

NAVAL FACILITIES ENGINEERING SYSTEMS COMMAND~MIDLANT

ROICC NORFOLK NORFOLK, VA

NORTHWEST ANNEX CHESAPEAKE, VA

WWTP REPAIR CLARIFIER #2

ELECTRICAL NEW WORK PLAN

SCALE: AS NOTED

EPROJECT NO.: 1743738

CONSTR. CONTR. NO. N/A

NAVFAC DRAWING NO. 12933716

SHEET 13 OF 14

ES101

DRAWFORM REVISION: 14 SEP 2023

FILE NAME: p:\IVA\northwest\buildings\0240 wwtp\2026_1743738_wwtp_repair_clarifier_2\B_Design\DWGS\Sheet\13_ELEC\ED_ES_Series.dwg PLOTTED: Thursday, April 30, 2026 12:23:06 PM USER: luanette.roman4.ugo

CLARIFIER #2 (SLUDGE PUMP STATION IN FOREGROUND)

NOT TO SCALE

CLARIFIER CONTROL PANEL

NOT TO SCALE

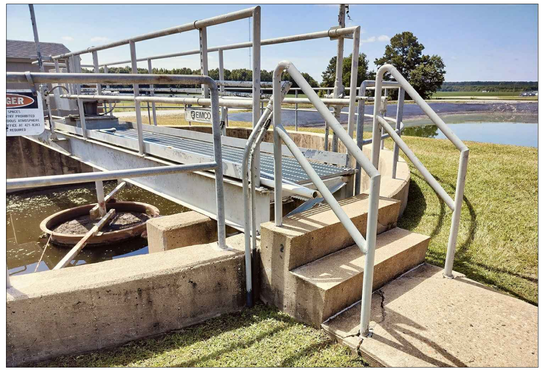

CLARIFIER #2 ACCESS STEPS TO BRIDGEWALK

NOT TO SCALE

CLARIFIER #2 MOTOR DRIVE

NOT TO SCALE

MARK	DESCRIPTION	DATE

NAVFAC

SEAL

A/E INFO

APPROVED

FOR COMMANDER NAVFAC A3035

ACTIVITY

JASON ETHERIDGE,NSA,HR

SATISFACTORY TO DATE 04/14/26

DES	JMC	DRW	JMG	CHK	DNB

PM/DM J. JONES, P.E.

BRANCH MANAGER C. MORTON, P.E.

CHIEF ENG/ARCH J. MILLER, P.E.

FIRE PROTECTION N/A

DEPARTMENT OF THE NAVY
NAVAL FACILITIES ENGINEERING SYSTEMS COMMAND
ROICC NORFOLK
NAVAL FACILITIES ENGINEERING SYSTEMS COMMAND–MIDLANT
NORFOLK, VA
NORTHWEST ANNEX
CHESAPEAKE, VA

WWTP REPAIR CLARIFIER #2

ELECTRICAL PHOTOGRAPHIC PLAN

SCALE: AS NOTED

EPROJECT NO.: 1743738

CONSTR. CONTR. NO. N/A

NAVFAC DRAWING NO. 12933717

SHEET 14 OF 14

E-901

DRAWFORM REVISION: 14 SEP 2023

FILE NAME: p:\VA\northwest\buildings\0240 wwtp\2026_1743738_wwtp_repair_clarifier_2\8_Design\DWGS\Sheet\13_ELEC\ED_ES_Series.dwg PLOTTED: Thursday, April 30, 2026 12:23:11 PM USER: kanette.coman4vgp