TINKER AIR FORCE BASE MECHANICAL STANDARDS

2026 Edition

Base Civil Engineer 72 ABW/CE
7535 5th ST, Ste 101
Tinker Air Force Base, Oklahoma 73145-9010
Telephone 405-734-3451
Fax 405-734-5535

APPROVING OFFICIAL:

WILSON.STEPHANIE.PETERENIA.1063234377 Digitally signed by WILSON.STEPHANIE.PETERENIA.1063234377
Date: 2026.03.08 20:01:53 -05'00'

Stephanie Wilson
Base Civil Engineer
72nd Civil Engineering Directorate

TABLE OF CONTENTS

I. Energy Conservation Requirements 4

A. General 4

B. Minimum Efficiency Requirements 4

C. Energy Metering 4

D. Energy Management Considerations 5

E. Computer Analysis 5

F. Life Cycle Cost Analysis 5

G. Design and Construction of Energy Monitoring Control Systems (EMCS) 5

H. Solar Heating Systems Requirements 7

II. Mechanical Engineering: Plumbing Systems 8

A. General 8

B. Facility Domestic Water Supply 8

C. Cross-Connection and Backflow Prevention 9

D. Wastewater Systems Design 10

E. Corrosion Prevention and Control 10

F. Water Treatment 11

G. Water Softeners / Water Treatment Equipment 11

H. Existing Energy Source 11

I. Natural Gas Systems 12

J. Fuel Systems 12

K. Welding 12

L. Plumbing Piping 12

M. Piping Thermal Insulation 12

N. Compressed Air Systems 12

O. Equipment and Fixtures 13

III. Mechanical Engineering: HVAC/R Systems 14

A. General 14

B. Submittal Requirements for All Mechanical Projects 14

C. Mechanical Equipment 15

D. Mechanical Piping 17

E. Underground Piping 17

F. Ductwork and Air Distribution 17

G. Natural Gas Systems 18

H. Welding 18

I. Temperature Controls / Energy Management / EMCS Systems 18

J. Water Treatment *18*
K. Mechanical Room Design *19*
L. Mechanical Equipment Location *19*
M. Base Refrigerant Management *21*
N. Contractor Certifications and Recordkeeping for Refrigerant Management *23*
O. Electrical and VFD Requirements *23*
P. Anti-Terrorism Force Protection (ATFP) Requirements *23*
IV. Appendix 25

I. Energy Conservation Requirements

A. General

1. Facilities shall include those energy conservation design features which can be economically justified or are otherwise required by UFC in conjunction with this TAFB Facility Standard. Principal considerations are building envelope and mechanical systems design and operation to minimize the use of fossil fuels.
2. Additional guidance may be found in prevailing Executive Orders in effect.

B. Minimum Efficiency Requirements

1. Minimum Energy Efficiency Requirements of buildings are established by the American National Standards Institute (ANSI), the American Society of Heating, Refrigerating & Air-Conditioning Engineers (ASHRAE) and the Illuminating Engineering Society (IES) and published in two separate standards. These standards are incorporated by reference into UFC 3-410-01 Heating, Ventilating and Air Conditioning Systems.
2. ANSI/ASHRAE/IES Standard 90.1 - Energy Standard for Buildings Except Low-Rise Residential Buildings (latest edition) establishes minimum efficiency and performance requirements for the following:
   a) Building Envelope
   b) Heating, Ventilating, Air-Conditioning, Refrigeration (HVAC/R)
   c) Service Water Heating (Boilers, Water Heaters)
   d) Power
   e) Lighting
   f) Other Equipment (Electric Motors, Service Water Pressure Booster Systems, Elevators, Escalators and Moving Walks)

   Note: *ASNI/ASHRAE/IES Standard 90.1 applies to new and existing building facilities at TAFB (except low-rise residential buildings).*
3. **ANSI/ASHRAE Standard 90.2** - ***Energy Efficient Design of Low-Rise Residential Buildings*** (latest edition) establishes design requirements for single-family houses, multi-family structures of three stories or fewer above grade, and manufactured houses (modular and mobile).

C. Energy Metering

1. Energy usage metering shall be provided for all projects in accordance with UFC 3-401-01 Mechanical Engineering, ANSI/ASHRAE/IES Standard 90.1 - Energy Standard for Buildings Except Low-Rise Residential Buildings, and the most recent Energy Policy Act.
2. Reference the most current version of the "Air Force Meter Data Management Plan" maintained by AFCEC. This can be found at the following link:
   a) https://cs2.eis.af.mil/sites/10159/SitePages/Service%20Page.aspx?Service=Air%20Force%20Facility%20Metering%20Program
3. All meters shall meet the minimum requirement of the AF's Advanced Meter Reading System (AMRS).
4. AMRS and Utility Metering Requirements include but are not limited to:
   a) New Gas and Water meters and replacement of existing analog Gas and Water meters shall, as a minimum, be equipped with pulse output which can be connected to an external pulse accumulator/counter. Pulse accumulators may be supplied by others. Pulse accumulators and digital "smart" Gas and Water meters must, as a minimum, communicate using Modbus TCP protocol with the AMRS system at Tinker AFB. Daily totalized consumption is required for a minimum of 90 days.

b) Electric Meters:
- 15-minute interval data with 30 days memory
- Local, scrolling LED or LCD display
- Hand-held data reader support (Bluetooth wireless or Optical Port)
- Minimum data recorded to include: kWh, kW demand, kVARh, kVAR demand, power factor EBI
- Communicate using Modbus TCP protocol with the AMRS system at Tinker AFB.

5. Refer to the Tinker AFB Electrical Standard for more information on metering.

D. Energy Management Considerations

1. Other items for consideration for energy conservation are economy cooling cycles, variable volume systems, and night and weekend system shutdown. Controls for night and weekend setup/setback of space temperature shall be provided for all areas.
2. Air-Conditioning of Occupied Spaces. Occupancies where air conditioning is permitted shall be per UFC 3-410-01.

E. Computer Analysis

1. For all major Military Construction (MILCON) projects, computer dynamic analysis techniques shall be utilized to effectively evaluate all design parameters associated with energy conservation design.
2. In addition to the calculations and analysis requirements indicated in UFC 3-401-01, provide calculations listed in UFC 3-410-01 Chapter 5, part 5-1.2, including an Energy Compliance Analysis (ECA), "U" Factor calculations, HVAC Load Calculations, Outside Air Requirements/ Calculations, Building Air Balance Calculations, Duct Pressure Drop Calculations, Hydronic System Pressure Drop Calculations, Pipe Expansion Calculations, and Equipment Sizing Calculations.

F. Life Cycle Cost Analysis

1. Design features shall be evaluated via life-cycle cost analysis. The various alternatives and their costs evaluated during design shall be documented by the designer and included in submittals.
2. The National Institute of Standards and Technology (NIST) has prepared the Life Cycle Costing Manual for the Federal Energy Management Program (NIST Handbook 135) and annually issues real growth energy price indices and discount factors for life cycle cost analysis. As a companion product, NIST has also established the Building Life Cycle Cost (BLCC) computer program to perform LCC analyses. The latest versions of the BLCC program not only structure the analysis but also include current energy price indices and discount factor references. These NIST materials define all required LCC methodologies used in GSA design applications. The A/E may obtain the BLCC software and updates from NIST. The project team must integrate the LCC analysis into the concept design process, and the analysis must be completed by the design development phase. Facilities Standard for the Public Buildings Service P100 - Chapter 1.7 - Lifecycle Costing by GSA.

G. Design and Construction of Energy Monitoring Control Systems (EMCS)

1. An energy monitoring control system shall be provided for all projects in accordance with UFC 3-401-01 *Mechanical Engineering*, ANSI/ASHRAE/IES Standard 90.1 - *Energy Standard for Buildings Except Low-Rise Residential Buildings*, and the most recent Energy Policy Act.
2. All stages of EMCS designs shall be coordinated with the Energy Management Program monitor in the Utility Engineering section (72 ABW / CECO) and HQ AFMC. All installed control systems shall be connected to the existing base wide Civil Engineering Community of Interest Network Enclave (CE COINE). The control system contractor shall contact the base Information Technology (IT) contractor for pricing and include this pricing in their estimate and scope to include the installation of the Ethernet drops and corresponding network IP addresses in the quantity and location detailed and required by the controls contractor. The control systems shall be integrated

into the base wide Energy Management and Control Systems (EMCS's) that are approved for Authority to Operate (ATO). These system vendors are Automated Building Systems, Inc., Honeywell and Paragon Robotics. The Contractor shall contact and coordinate connections with the CE Information System Security Manager (ISSM), the CE Energy Management office and CE Operations.

3. **Control Protocol.** ASHRAE's BACnet® protocol is the required system for Tinker AFB facility monitoring and control systems. Facility HVAC control systems based on the BACnet® protocol must be designed and constructed in accordance with ANSI/ASHRAE Standard 135, UFGS 23 09 00, UFGS 23 09 23.02 and UFGS 23 09 13. For additional information, refer to specific UFCs such as UFC 3-401-01 *Mechanical Engineering* and UFC 3-410-01 *Heating, Ventilating, and Air Conditioning Systems.*

4. Civil Engineer-owned, operated, or maintained control systems shall follow policy directives published in **Air Force Guidance Memorandum AFGM 2018-32-01** *Civil Engineer Control Systems Cybersecurity* (or latest edition), and AF CE CS *Cybersecurity Plan v 2.0* submitted 17-Sep-18. In addition, follow guidance published in UFC 4-010-06 Cybersecurity of Facility-Related Control Systems. Additional guidance is found in the Appendix section of this Standard, US DoD publication FACILITY-RELATED CONTROL SYSTEMS CYBERSECURITY GUIDELINE.

5. System Design Requirements

   Mechanical and electrical systems in facilities shall be provided with the necessary sensors, controls, and hardware points to implement the EMCS application programs per **UFC 3-410-01 *Heating, Ventilating, and Air Conditioning Systems*** (latest edition), following the guidance for ASHRAE BACnet® monitoring and control of the systems.

   a) The new and replacement network controllers shall be selected to be fully functional and seamlessly compatible with the equipment controllers such that the base operations control technicians utilize their systems training and system support tools to maintain, configure and program both the network controllers and the equipment controllers at the same time.

   b) Control system designers shall submit the proposed schedule of points to be monitored and/or controlled in the I/O summary table format as outlined UFC 3-410-01 Heating, Ventilating, and Air Conditioning Systems (latest edition). For additional requirements, consult other sections within the TAFB Facility Standards (such as the requirement for vibration isolation sensing and monitoring controls listed in Section III of this standard).

   c) Site-specific schematics shall be provided showing all sensors, controls, and hardware points.

   d) Pneumatic HVAC controls are no longer allowed at Tinker AFB. All projects modifying, replacing, or installing HVAC controls shall utilize DDC.

   e) The new installation/replacement shall be coordinated in a way that does not interfere with existing performance contract(s) (ESPC/UESC) in place, where the majority of the specified areas are dictated by such contracts. In a building where the existing performance contract covers only a part of the area or systems, any controller may be selected as long as such installation does not interfere with the existing performance contract. Such controllers shall be fully compatible with the existing EMCS's that are approved for ATO and serviceable by the base operations control technicians or local service crews.

6. Installation Requirements

   a) All abandoned-in-place temperature controls shall be demolished as part of the construction, renovation, repair or other improvement project.

   b) Where DDC controls are installed, the controls shall be fully compatible with the existing control system and the base wide EMCS system. Comply with specific code provisions regarding network controls, such as UFC 3-410-01, Chapter 4, Section 309, para. 309.3.

   c) **ALL** wiring from sensors, controls, and hardware points shall be in conduit. Conduit shall meet the requirements outlined in the ***Base Electrical Standard***. Wiring shall be terminated

at a Data Termination Cabinet (DTC) located in mechanical rooms.

d) Install conduits entering panels from side and bottom of panel to prevent water from entering the panels and destroying the electronics.

e) Provide adequate clear space around EMCS Data Gathering Panel (DGP) location of future FID and MUX and accessibility of maintenance personnel.

H. Solar Heating Systems Requirements

1. Any facility undergoing major renovation must be evaluated per life-cycle costing to determine if 30% or more of required domestic hot water can be supplied by a cost-effective solar heating system.

– End of Section –

II. Mechanical Engineering: Plumbing Systems

A. General

1. Plumbing systems at Tinker AFB generally include the following facility systems:
    a) Domestic water supply piping, booster pumps and related systems
    b) Waste water piping and related components
    c) Natural Gas piping and related components
    d) Compressed air piping and related components (i.e. air-compressors)
    e) Lavatory, toilet and related plumbing fixtures
    f) Water heaters and boilers for domestic water heating
    g) Storm drainage systems within and to 5 feet outside buildings
    h) Water for landscaping
    i) Water softening and treatment (small) systems for buildings
    j) Corrosion control (cathodic) protection systems
2. Design and construction of plumbing systems shall be in accordance with the International Plumbing Code and the following, as applicable:
    a) UFC 3-420-01 Plumbing Systems
    b) UFC 3-420-02FA Compressed Air
    c) UFC 3-230-01 Water Storage, Distribution and Transmission
    d) UFC 3-430-09 Exterior Mechanical Utility Distribution
    e) Air Force Instruction AFI 32-1066 *Backflow Prevention Program*
    f) NFPA
3. For all design, repair by replacement, demo and work order repair projects, a real property equipment list shall be developed prior to execution. The list shall identify by UID all equipment to be demolished, repaired or replaced. The list shall include facility number, the manufacturer's name, and physical attributes of each piece of equipment as well as its grid coordinate location within the project confines of the facility. This list shall be routed through Operations Engineering, 72ABW/CEEO.
4. Pipe Labeling: All supply and return lines shall as a minimum be identified with markings denoting both flow direction and fluid transported. Labeling shall follow all requirements ANSI/ASME A13.1 including the colors, warnings, etc.

B. Facility Domestic Water Supply

1. Base domestic water supply systems shall be from potable water lines. All water used for process purposes (heating, air conditioning) shall be isolated from domestic supply systems, or 'drinking water', by means of reduced-pressure backflow prevention devices.
2. Tie-ins to existing water lines shall be analyzed to document as part of the project design analysis that existing demands shall not be adversely affected by new demands.
3. Incorporate handicapped accessible design for all toilet areas, shower areas, and drinking fountains.
4. Provide access to piping, valves, and instrumentation for maintenance personnel. Access to through-wall piping shall be provided by means of wall access panels or, where space is available, from a walk-in plumbing chase. Where carriers are utilized to support fixtures, a walk-in plumbing chase is preferred.
5. Domestic hot and cold potable water piping shall be Type K copper pipe for underground

applications and Type L seamless copper tubing for above ground applications. Provide dielectric insulators at point of contact with dissimilar metallic piping. Provide insulation for all domestic and comfort cooling supply and return lines.

6. Do not use dissimilar metals in contact with each other on piping in a common electrolyte such as water or soil.
7. Provide stop-valves at all plumbing fixtures.
8. Provide water hammer arrestors as required by code and for any location where quick-acting valves are installed. Utilize devices that comply with relevant standards such as ASSE 1010.
9. Design piping with the following velocity limitations to minimize erosion:

Pipe Dimension		**Maximum Velocity**	
inches	*mm*	*m/s*	*ft/s*
1	25	1	3.5
2	50	1.1	3.6
3	75	1.15	3.8
4	100	1.25	4
6	150	1.5	4.7
8	200	1.75	5.5
10	250	2	6.5
12	300	2.65	8.5

5. Water meters shall be installed on all facilities. See TAFB Facility Standard Section 6: Utilities for full metering requirements.
6. For engineering design and system sizing determinations, it shall be anticipated by project designers that the highest demand for water will be during normal duty hours.

C. Cross-Connection and Backflow Prevention

1. Cross-connection and backflow prevention policies of AFI 32-1066 *Backflow Prevention Program* shall be followed to protect the potable water system and facility occupants.
2. The proper backflow prevention device shall be specified as required in AFI 32-1066 for the hazard involved.

3. Backflow prevention devices shall be located and installed to ensure they shall function, not freeze, and are readily accessible for testing, service and repair.

D. Wastewater Systems Design

1. Comply with Air Force Instruction AFI 32-1066 *Backflow Prevention Program*, latest edition.
2. Where specific project requirements are determined more stringent by 72 ABW/CE, use the manual of practice Gravity Sanitary Sewer Design and Construction, as jointly published by the *Water Environment Federation* and the *American Society of Civil Engineers* as the MOP FD-5.
3. All projects on TAFB which include earthwork shall comply with Engineering Technical Letter ETL 03-1: Storm Water Construction Standards.
4. General Requirements
   a) Provide sanitary drain systems from lavatories, toilet areas, break areas, and non- industrial waste floor drains to sanitary lines. Piping shall be installed to provide a slope of ¼ inch per foot for a pipe diameter of 2 inches and below and 1/8 inch per foot for piping 2-1/2 inches and larger.
   b) All Restrooms projects involving under-floor plumbing work shall locate new floor drains under the partitions in the new or final floor layout.
   c) All projects involving a janitor closet and under-floor piping shall place a floor drain in the center of the janitor room with grading to ensure removal of all water from floor.
   d) All floor drains shall be installed with a means to prevent sanitary sewer gases entering the building. Provide barrier type trap seal devices or trap primers. Trap primers are preferred to be installed in the wall with access panels and with hammer arresters.
   e) Wall cleanouts shall be incorporated at appropriate points within plumbing system designs to serve all water closets, urinals, and lavatories. Wall cleanouts shall be located 26” A.F.F. Floor cleanouts are not acceptable in restrooms.
   f) Where piping is to be installed in exterior walls, the designer must show that the exterior wall design will prevent water or waste piping from experiencing freezing conditions.
   g) Do not provide water or waste piping in attic spaces where there is danger of freezing.
   h) The installation of an electric waste disposer/food waste grinder is prohibited except as provided in UFC 3-420-01 *Plumbing Systems*.
5. Additional Requirements
   a) Pre-Construction & Post-Construction Scoping. Prior to beginning construction, a contractor performing a renovation, repair or replacement project that involves sanitary waste lines shall snake existing sanitary pipes 100 feet to identify and clear any blockages in existing lines. Upon construction completion, following all clean-up activities, the contractor shall scope both new and existing sanitary pipe to clear any obstructions. Snake pipes that are smaller than 6”. Provide video footage for sanitary pipes 6” and larger in diameter. Video footage shall be obtained pre-construction and again post-construction. Submit video evidence prior to the new pipe being installed. Following construction, submit post-construction video evidence of all new and existing pipes. The Contractor shall perform the above work in the presence of the Construction Inspector. The above is a minimum standard requirement. Project specific requirements may differ and/or increase the line length.

E. Corrosion Prevention and Control

1. Protective coatings: Coating specifications for above and below ground high value metallic structures shall be prepared IAW the guide specifications as shown in UFC 3-190-06 *Paints & Protective Coatings.*
2. Underground piping systems shall conform to either FS-L-C-530, Type II except tape and primer conform to AWWAC203, for epoxy or for continuously extruded polyethylene, FS-L-C-530, Type I.

3. On all metallic structures where the surface is blasted to white or near white finish, no blasted surface shall be left unprimed beyond the normal workday.
4. Coatings specified for underground or submerged use shall be those specifically designed for those types of environmental conditions.
5. Under no circumstances shall thin plastic film tapes, such as electrical tape, be used to coat underground structures or wiring.
6. Reference NACE Standard RP-01-69 for coating information.

F. Water Treatment

1. Water treatment shall be provided for all transfer media in all heat transfer equipment.
2. Heat transfer equipment shall be taken to include cooling towers, chilled/hot water systems, and boilers.
3. Treatment shall contain no chromates and no heavy metals.
4. Water treatment design analysis shall contain base water analysis and step-by-step procedures used to arrive at suggested treatment.
5. This analysis shall include which constitute of water is the limiting parameter.
6. All new equipment, water treatment systems and methods installed shall be in compliance with support the descriptions, recommendations, and guidelines of UFC 3-240-13FN *Industrial Water Treatment Operation and Maintenance.*
7. Air Force Non-Chemical/Nontraditional Water Treatment Devices Policy: M o s t non-chemical water treatment devices or equipment are not currently authorized for use on military installations, as stated in paragraph 1-1.5. The Air Force will allow their use only under an Energy Saving Performance Contract (ESPC) in which the contractor assumes all performance-based risk. The performance standards for system component protection must meet or exceed those that are achievable with chemical treatment. (See UFC 3-240-13FN Chapter 8 for details).

G. Water Softeners / Water Treatment Equipment

1. Water softeners are required on all open loop makeup systems including but not limited to steam boilers, humidifiers, and commercial domestic hot water systems (kitchens).
2. Softeners shall be properly sized to allow soft water to be introduced into systems at all times, including emergency shutdown.
3. Provide adequate water/conditioned water for all boiler systems.
4. Side stream pot feeders and annual chemical treatment shall be provided on all "closed loop" systems including but not limited to heating water loops, chilled water loops, and fluid cooler applications.

H. Existing Energy Source

1. Natural gas is available for facility heating if steam is not available.
2. Natural gas pressure varies from 30 to 40 psig, seasonally.
3. Gas is on an uninterruptible contract.
4. Steam is no longer supplied from centralized locations on Tinker AFB (i.e. boiler plants). Most facilities previously served by a central boiler plant have been converted to heating water. A facility having a stand-alone steam boiler (except process boilers), will need to be evaluated for conversion to other mediums. Designers/contractors shall consult with Base Civil Engineering in order to confirm requirements for specific heating equipment.

I. Natural Gas Systems

1. Exterior Distribution Piping (Mains): Refer to TAFB Facility Standard, part 6.9 **Natural Gas Delivery Systems.**
2. Building Service:
   a) Install sufficient isolation valves to repair units without shutting off the entire system
   b) Replace natural gas regulators over 15 years old.
   c) Distribution regulators. All distribution regulator sets shall be installed with:
      - Regulators that do not fail in the valve "open" position (e.g., do not use pilot loaded regulators since they fail too "open").
      - Valved, regulated bypasses to permit equipment repair or replacement.
      - Regulators that have valve stem indicators.
      - Sets that use one regulator for control of flow and a second regulator to monitor the flow.

J. Fuel Systems

1. Standards
   a) UFC 3-460-01, Petroleum Fuel Facilities (if applicable)
   b) Oklahoma Administrative Code, Title 165, Chapter 25, Underground Storage Tanks (as applicable)
   c) Oklahoma Administrative Code, Title 165, Chapter 26, Aboveground Storage Tanks (as applicable)
2. General Requirements
   a) All mechanical demolition and construction work on fuel tanks shall be done by a licensed Oklahoma Corporation Commission (OCC) operator.

K. Welding

1. All welding shall be performed by a welder certified IAW ANSI B31.1 or API 1104 codes. Welds shall be made and inspected IAW ANSI B31.8 requirements.

L. Plumbing Piping

1. Piping installed on new systems shall be corrosion resistant. Otherwise a cathodic protection system shall be provided. Provide necessary shutoff valves and identification.
2. Pipe Painting: All exposed plumbing piping shall be primed with paint suitable for metal surfaces and finish painted with color to match background. This requirement applies to repair and renovation projects as well as new construction or additions to existing building plumbing systems.

M. Piping Thermal Insulation

1. <u>Insulation of plumbing piping located outdoors.</u> Where piping that serves domestic hot water, domestic cold water or similar fluid is installed outdoors or otherwise exposed to the elements, insulation <u>shall exceed by 30%</u> the requirements of ASHRAE 90.1. This shall apply to all new construction, renovation, repair or replacement projects.
2. <u>Insulation of plumbing piping located within a conditioned environment.</u> Where piping is installed indoors or otherwise within a conditioned environment, thermal insulation shall meet requirements of ASHRAE 90.1. This shall apply to all new construction, renovation, repair or replacement projects.

N. Compressed Air Systems

1. Compressed air, if required, shall be provided by base compressed air distribution system where available.

2. Where the Base system is unavailable to the project site, provide stand-alone compressors and locate in facility mechanical room.
3. Provide necessary maintenance access for controls, refrigerated air dryers, and condensate handling equipment.
4. Ventilate mechanical rooms to prevent overheating components and to maintain acceptable indoor air quality. Ventilation system designs shall comply with **ASHRAE Standard 62.1 – *Ventilation for Acceptable Indoor Air Quality,*** latest edition.
5. Install inlet air filtration with instrumentation.
6. Install vibration isolation pads (neoprene component material is preferred), including flexible connections between the compressor and its associated piping, to prevent vibration damage to compressors.
7. Noise suppression shall be provided to keep compressor noise within Occupational Safety and Health (OSHA) limitations.
8. Oil free compressors shall be required for breathing air applications.

O. Equipment and Fixtures

1. Electric Water Coolers/Drinking Fountains. Design electric water coolers (drinking fountains) to be dual use water coolers and bottle filling stations. Units shall be filter-less type. Provide accessible models where required.
2. Standard Restroom Fixture - Basis of Design.
   a) Faucet, hand washing. Sloan EAF-275 sensor activated, or equal.
   b) Service Faucet. T&S Brass & Bronze Works, Inc. model B-0665-BSTP wall mounted, or equal.
   c) Flush Valve (new/replacement). Sloan or equal, AC powered sensor-activated, single-flush or manual flush valve.
   d) Flush Valve (retrofit conversion). Sloan or equal AC-powered sensor activated, single-flush retrofit conversion kit for exposed closet or urinal applications.

– End of Section –

III. Mechanical Engineering: HVAC/R Systems

A. General

1. Proper design of mechanical systems is required for the health and life safety of building occupants, operations and maintenance personnel and the general public.
2. Mechanical systems shall be designed, constructed, operated and maintained according to UFC requirements, Air Force Instructions, TAFB Instructions and other requirements. In the absence of specific criteria, follow recommendations from ASHRAE and/or the equipment manufacturer.
3. Mechanical systems, including all heating, ventilating, air-conditioning and refrigeration systems shall be designed and constructed, operated and maintained to meet applicable code requirements and Tinker AFB Standards.
4. All HVAC systems shall be tested and balanced following installation or replacement. Testing and balancing shall be performed in accordance with UFC requirements.
5. Commissioning by a third-party contractor is required for all new HVAC equipment.
6. All mechanical equipment, ductwork, piping, controls or appurtenances that are abandoned-in-place shall be demolished as part of the repair, renovation, construction or other improvement project. Coordinate with the Government for the salvage of any equipment still in good operational condition.
7. All mechanical equipment schedules shall incorporate the use of existing unit identification numbering (UID) for all real property equipment.
8. Provide the Unique Identification (UID) of new or repaired/replaced equipment with black micarta with engraved 3/16” high white letters to be attached to the equipment with epoxy adhesive. The UID for replaced or repaired equipment shall remain as existing if consecutive numbers are correct with existing building sequence. Otherwise the additional equipment will continue with the building sequence and not start a new numbering.
9. For all design, repair by replacement, demo and work order repair projects, a real property equipment list shall be developed prior to execution. The list shall identify by UID all equipment to be demolished, repaired or replaced. The list shall include the facility number, the manufacturer’s name and physical attributes of each piece of equipment as well as its grid coordinate location within the project confines of the facility. This list shall be routed through Operations Engineering, 72ABW/CEEO.
10. All new mechanical rooms shall have unit heaters to maintain a freeze protection temperature of 50° F. Any renovation with work in the mechanical room shall meet the same requirement and have unit heaters added if necessary.
11. Unless approved otherwise, all new mechanical equipment shall use electrically generated heating in accordance with DoD Electrification Memo dated 3/29/23.
12. If possible, supply air on new equipment should utilize a fan wall design rather than large fans or other designs. Fan walls should be designed to operate as close to 60 Hz. as possible.
13. Unless approved otherwise, new HVAC designs shall incorporate Dedicated Outside Air Systems (DOAS) as required by UFC 3-410-01. If possible, also include heat recovery in new HVAC designs.

B. Submittal Requirements for All Mechanical Projects

The information herein applies to all construction and/or repair projects regardless of delivery method. Refer to contract documents for additional information on submittal requirements. In the absence of specific contract requirements, the following minimum requirements shall apply:

1. Design submittals shall be provided at one or more levels; schematic, preliminary, design development and final design phases (i.e. 15%, 35%, 65%, etc.) as per contract documents.
    a) Schematic phase: Preliminary design analysis to include manufacturer cut-sheets, sketches, preliminary load calculations.
    b) Design development phase: Preliminary design analysis, preliminary load calculations, mechanical equipment plan layout and air distribution design, preliminary hydraulic calculations, plumbing design, equipment selections, outline specifications, etc.
    c) Construction document phase: Final design analysis, final mechanical equipment plans, final air distribution design, final plumbing design, equipment selections, schedules, specifications, etc.
2. Shop drawing submittals shall consist of the following:
    a) Installing contractor or sub-contractor provided drawings to illustrate the dimensional requirements (including spatial constraints, maintenance requirements, etc.) for all systems, materials and equipment to be assembled or constructed in-place. Examples include isometric drawings for all plumbing and instrumentation (P&I), air distribution systems, buried piping, utility vaults, etc.
    b) Manufacturer's published data for all pre-manufactured items to be installed and/or otherwise provided on Tinker AFB. Data shall include, but not be limited to <u>all</u> of the following as applicable: certified performance data, capacities, dimensions, ratings, code approvals, the approval seal and/or published rating information for all listing agency standards, manufacturer's special requirements, general installation requirements, access requirements, electrical characteristics (voltage, frequency, phase, amperage, capacitance, resistance, inductance ratings, etc.).
3. Combine all related materials into one submittal, i.e. all plumbing fixtures, all air distribution devices, all related mechanical assemblies, etc. to be submitted using one form AF3000, with each item listed separately.
4. The following required deliverables shall be provided in electronic (PDF) format and hard copy:
    a) Installation manuals
    b) Operation & maintenance (O&M) manuals, including spare parts list
    c) Wiring diagrams, including project specific wiring diagrams, control diagrams, etc.
    d) Start-up test and check reports, Test and balance (TAB) reports, etc.
    e) Commissioning plans, reports and manuals
5. As-built drawings shall be provided in both hard copy and electronic form. Electronic documents shall be in both AutoCAD and PDF formats.
6. Additional requirements are published in Tinker AFB Standard Specification Section 01 33 00 SUBMITTAL PROCEDURES. Specific drawing documentation details may be found in various code documents such as UFC-3-401-01 Mechanical Engineering, UFC 3-410-01 Heating, Ventilating, And Air Conditioning Systems, etc.

C. Mechanical Equipment

1. All outdoor mechanical equipment shall be rated and installed for all weather conditions. These provisions shall include but not be limited to the following:
2. Low voltage electrical connections to outdoor mechanical equipment.
3. Heat tracing and insulation to prevent freezing.
4. Aluminum protective covering for outdoor insulation.
5. Protection for pipe insulation in high traffic areas.
6. Rain tight NEMA rated enclosures and watertight EMT as applicable.

7. Hail damage guards and high wind protection for refrigerant condenser coils.
8. Low ambient capability (to at least 0 degrees F) for air-cooled refrigeration condensers, compressor-bearing condensing units and packaged outdoor HVAC units when required to operate in low ambient conditions.
9. Hot gas reheat for packaged outdoor HVAC units for dehumidification.
10. Condensate piping shall be routed from roof mounted equipment to the nearest COPP is prohibited.
11. All installed equipment utilizing refrigerants shall use a refrigerant which is approved for use on Tinker AFB as listed in Section III.M.8 of this Standard.
12. All HVAC installation, repair or replacement work shall be performed in accordance with ASHRAE and other industry-accepted standards.
13. All new HVAC equipment shall have filtration media with a minimum MERV 13 rating. All projects with work associated with an existing HVAC unit shall have new MERV 11 filters installed. New filters should be installed before and after construction in major renovations that generate significant dust.
14. Whenever possible, install bypasses or some other means to ensure regular maintenance items such as strainers may be cleaned without plant shutdown.
15. Provide disconnect switches for remote-controlled equipment like air handlers and exhaust fans.
16. All equipment which could be damaged by inclement weather or accidental damage shall be installed with protective equipment options or provisions including, but not limited to, hail guards for all air-cooled condensers.
17. As applicable, all equipment should include the following items: return air and outside air dampers as well as airflow monitoring stations.
    a) Return air dampers
    b) Outside air dampers
    c) Airflow monitoring stations
    d) Discharge air temperature sensors
18. Floor or grade mounted equipment shall be mounted on suitable concrete housekeeping pads extending 6 inches beyond the unit footprint. Grade mounted equipment shall be secured to the housekeeping pad. Housekeeping pads shall be secured to the building foundation by means of mechanical, structural and/or chemical-bonding material. Pads shall be placed level, to a height of four inches (4”) above the floor, and all exposed edges shall have a one-inch (1”) chamfer. Pads shall not be placed adjacent to a wall, column, or other building element unless suitable maintenance access is provided to the equipment to be mounted onto the pad.
19. Mechanical equipment having rotating or reciprocating components, such as compressors, fans, motors, etc. shall have vibration isolation suitable for the mass of the equipment, whether spring isolators or rubber.
20. All equipment shall be located with sufficient clearance for maintenance and be provided with access by means of identified panels, catwalks, platforms, stairs or ladders as required.
21. Requirements for Boilers: Prior to construction, contractors shall contact Tinker AFB 72 ABW Civil Engineering Squadron, Environmental Management, Air Quality Division, regarding current environmental requirements for new boiler equipment. Additional requirements may be found in Tinker AFB General Specification Section 00 72 00 - *ENVIRONMENTAL REQUIREMENTS FOR CONSTRUCTION ON TINKER AIR FORCE BASE*. Tinker AFB Environmental shall also be contacted for current environmental metering, recording, and reporting requirements for new boilers.
22. Infrared Heating Systems, infrared heaters and system components installed on base, specifically in buildings located near the flight line such as aircraft hangers, shall be designed to prevent

movement caused by vibration during aircraft take-off operations. Consider designing with seismic protection to accomplish this measure.

23. Equipment using 100% Outside Air
    a) For heating, equipment should utilize pre-heat and final heating capacity.
    b) Final heating coil should utilize face and bypass damper for better control of space temperature setpoint.
24. Chiller Manufacturers
    a) Chillers installed on Tinker Air Force Base shall be manufactured by Trane, Daikin or York. Other manufacturers will be strictly evaluated based on acceptable capacity, performance, local support capability, and parts availability.

D. Mechanical Piping

1. Isolation valves shall be provided at each piece of connected equipment.
2. Isolation valves shall be provided at each branch line extending from a main line (tee fitting).
3. Thermometers, pressure gauges and PT plugs shall be provided at all coils.
4. All supply and return lines shall be identified with markings denoting flow direction and fluid transport.
5. Pipe Painting: All exposed mechanical piping shall be primed with paint suitable for metal surfaces then finished with a paint color to match the background. This requirement applies to repair and renovation projects as well as new construction or additions to existing building systems regardless of method of project delivery.
6. Pipe Labeling: All mechanical piping shall comply with the requirements of Section II.A.4.
7. All mechanical piping for HVAC equipment shall be insulated in accordance with Section II.M of this Standard.
8. All condensation shall be drained to the sanitary sewer on all projects. All condensate piping on roof units shall be copper supported on with pipe stands appropriate for roofing material. Wood blocking is not allowed. Piping for indoor units shall be copper or UV resistant PVC.
9. Piping installed on new systems shall either be manufactured as corrosion resistant, have protective coatings applied in the field or have a cathodic protection system.
10. All projects affecting chiller system piping shall include installing a tee at the chiller to allow for maintenance or the connection of temporary chiller systems.
11. All valves above grade shall be identified with metallic tags and metal fasteners. Provide printed and PDF index in closing documents. Numbering shall be in sequence with any existing tags otherwise start with 001.

E. Underground Piping

1. Steam utility piping systems shall be designed in accordance with UFC 3-430-01FA *Heating & Cooling Distribution Systems.*
2. All steam and hot water distribution systems shall have a cost analysis performed comparing aboveground, surface utility, and underground conduit systems to determine the most economical system. Comparison should include cost, maintainability, and system performance.
3. Install cathodic protection systems to protect all piping and appurtenances located underground.

F. Ductwork and Air Distribution

1. All ductwork shall have a class A seal.
2. All HVAC ductwork shall be constructed and installed in accordance with industry-accepted standards including but not limited to ASHRAE and SMACNA standards.

3. Install sufficient insulation and vapor barrier on air conditioning ductwork and chilled water piping to prevent condensation. Duct liner shall be kept to a minimum for sound control only. The preferred thermal insulation shall be external wrap.
4. Balancing dampers in ductwork shall be installed so as to be inaccessible to the occupants of the space being served, i.e. in the takeoffs from the duct branches rather than in the diffusers.
5. Exposed Ductwork Painting: All exposed mechanical ducts shall be primed with paint suitable for metal surfaces and finish painted with color to match background. This requirement applies to repair and renovation projects as well as new construction or additions to existing building systems regardless of method of project delivery.
6. All diffusers and air grilles should be aluminum construction.

G. Natural Gas Systems

1. Refer to Plumbing Section II for requirements.

H. Welding

1. All welding shall be performed by a welder certified IAW ANSI B31.1 or API 1104 codes. Welds shall be made and inspected IAW ANSI B31.8 requirements.

I. Temperature Controls / Energy Management / EMCS Systems

1. Temperature controls for all renovation and new construction projects shall utilize direct digital control (DDC) systems as required by UFC 3-410-01.
2. All new mechanical equipment (air handling units, fan coil units, chillers, boilers, pumps, etc.) shall have new DDC controls tied into the base wide Honeywell DDC system to allow troubleshooting remotely as well as at the facility.
3. All DDC outputs (analog or digital) shall be commandable through the ICS graphics.
4. Provide vibration sensors for all mechanical equipment having electric motor(s) equal to or exceeding 50 HP. Vibration sensing equipment shall include permanent mount sensors/transducers, collection boxes and cabling sourced via the same manufacturer – all devices shall be compatible. Preferred products are as manufactured by Connection Technology Center, Inc. Victor, NY.
5. All new chillers and new pumps shall be controlled independently.
6. All hot water systems shall have the capability to change the hot water setpoint and have an outside air reset schedule.
7. Provide baseline measurements for all equipment in commissioning reports. Record results on the EMCS monitoring system.
8. Upon initial download, controller programs shall be modifiable locally at the facility.
9. For additional requirements, refer to **Section I – Energy Conservation Requirements** in this document.

J. Water Treatment

1. In order to protect boilers, cooling towers, chillers and other capital-intensive mechanical equipment, water treatment shall be provided as recommended by the specific equipment manufacturer. Site-specific water quality testing shall be performed, and written lab test results shall be provided by an independent third-party test agency. Based on the lab test results, a formal water treatment plan shall be developed and a water treatment program implemented.
2. Annual chemical treatment shall be provided on all "closed loop" systems including but not limited to heating water loops, chilled water loops, and fluid cooler applications. Side stream pot feeders shall be provided for all mechanical systems requiring chemical treatment whether or not specified on plans, drawings or otherwise.

3. Water treatment shall be provided using traditional chemical-based methods. Non-chemical treatment methods are prohibited by USAF policy.
4. Ensure the output capacity (volume and pressure) from the water treatment equipment is adequate for the volume of makeup water required, according to the boiler manufacturer.
5. Water softeners are required on all open loop makeup systems including but not limited to steam boilers, humidifiers, cooling towers and commercial domestic hot water systems (kitchens).
    a) Softeners shall be properly sized to allow soft water to be introduced into systems at all times, including emergency shutdown.
    b) Provide soft water/conditioned water for all boiler systems.

K. Mechanical Room Design

1. In order to protect boilers, cooling towers, chillers and other capital-intensive mechanical systems, dedicated mechanical room(s) shall be provided for all mechanical equipment and systems in accordance with the International Mechanical Code for new construction projects. New HVAC equipment shall use existing mechanical rooms to the extent possible.
2. Mechanical rooms shall be provided with doorways suitable for passage of the mechanical equipment to be installed inside the space.
3. Mechanical rooms containing refrigeration equipment such as water chillers, refrigerant cooled equipment, coils, etc. shall comply with **ASHRAE Standard 15** ***Safety Standard for Refrigeration Systems***, latest edition. *This is a mandatory, Life Safety, Health and Welfare requirement.*
4. Ventilate mechanical rooms to prevent overheating components and to maintain acceptable indoor air quality. Ventilation system designs shall comply with **ASHRAE Standard 62.1** ***Ventilation for Acceptable Indoor Air Quality****,* latest edition.
5. For mechanical rooms housing chillers, boilers or heat exchangers, allow sufficient clearance to access the tube bundles for tube cleaning, eddy current testing or tube replacement. Typically, to meet the “sufficient space” requirement, allow clearances equal to the overall equipment length plus 20%, measured from the accessible end(s) of the equipment (i.e. end bell covers). Where possible, this type of equipment should be located at ground floor level and near an exterior, overhead door. In cases where space is at minimum, equipment could be positioned to allow for servicing through the open doorway.
6. Chillers, boilers, heat exchangers, fans, pumps motors or other large equipment exceeding 100 HP, 100 tons in refrigerating capacity, or having serviceable components exceeding 150 lbs. should be provided with permanently installed, overhead hoist or crane rails secured to and integrated with the building structure.

L. Mechanical Equipment Location

1. Locate equipment to allow access for maintenance IAW the International Building Code (IBC) and International Mechanical Code (IMC). Avoid locating equipment on roofs due to maintenance problems. Provisions shall be made for the removal of equipment for maintenance. Assure that proper distance between system components and walls is maintained to ensure ability to clean, repair, or replace system components.
2. Equipment such as Air Handling Units, large supply, return or exhaust fans, fan coil units and similar equipment shall not be located above spaces having ceilings constructed with acoustic tile (drop ceiling systems), gypsum board, or other material unless provided with dedicated code-compliant access stairways, ladders, maintenance walkways and other means of mechanical access IAW the International Building Code (IBC). This includes variable air volume (VAV) or other air terminals where the bottom of such units would be located more than 12’-0” above the finished floor space.
3. Curbed Applications. Where HVAC systems are to be installed on a roof using a roof curb assembly, the requirements of the roof assembly, including roof insulation material thickness, will need to be considered when selecting the height of the roof curb.

4. Non-Curbed Applications. Where HVAC systems must be installed above a roof in a non-curb application (no roof curb), provide an Elevated Mechanical Platform which will allow sufficient access for roof maintenance and repair without removal of the HVAC equipment. Elevated Mechanical Platform shall comply with the following requirements:
   a) Elevated Mechanical Platform shall be designed to support the HVAC equipment weight as well as the required maintenance walkway around the equipment including any stairs or ladders required for access, in addition to ductwork, piping and appurtenances.
   b) Minimum clear height from the roof surface to the elevated structure shall be as shown in Figure 1, below.
   c) Roof supports shall be secured to structure. Refer to Figure 2 (below) for typical requirements.
   d) Access to the roof below the Elevated Mechanical Platform supporting the HVAC system shall be provided on at least three sides, and the open sides shall not be obstructed with flashing, fencing, covering or other material.
   e) All penetrations, duct routing, conduit routing and equipment placement not on curbs shall be in general conformance to the representative set of details found in the Appendix section, ***Attachment of Rooftop Equipment in High-Wind Regions,*** **FEMA.**
   f) All pipe supports shall be structurally anchored to the deck.

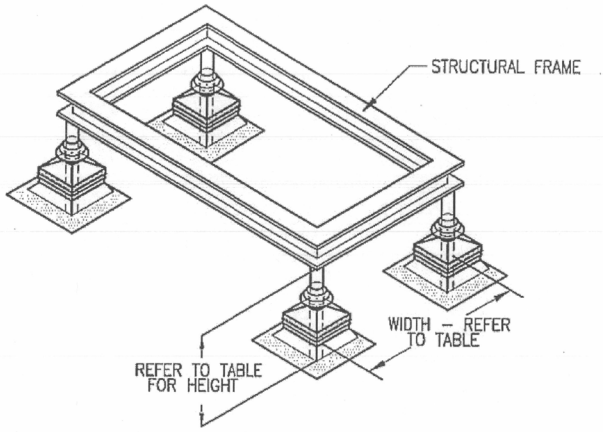

WIDTH OF EQUIPMENT	HEIGHT OF LEGS
UP TO 24"	20"
25" – 36"	24"
37" – 48"	30"
49" – 60"	36"
61" AND WIDER	54"

FIGURE 1 – ELEVATED MECHANICAL PLATFORM SUPPORT STRUCTURE FOR INSTALLATIONS ABOVE ROOF

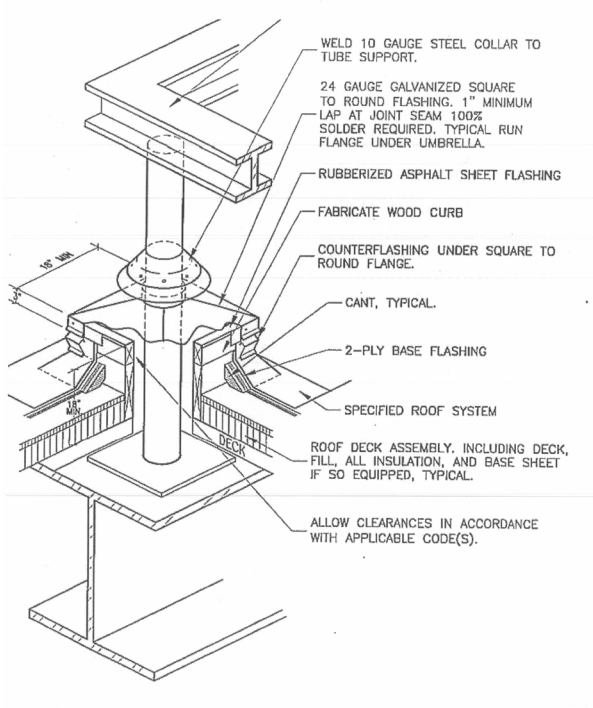

FIGURE 2 – TYPICAL ROOF SUPPORT DETAIL FOR ELEVATED PLATFORM

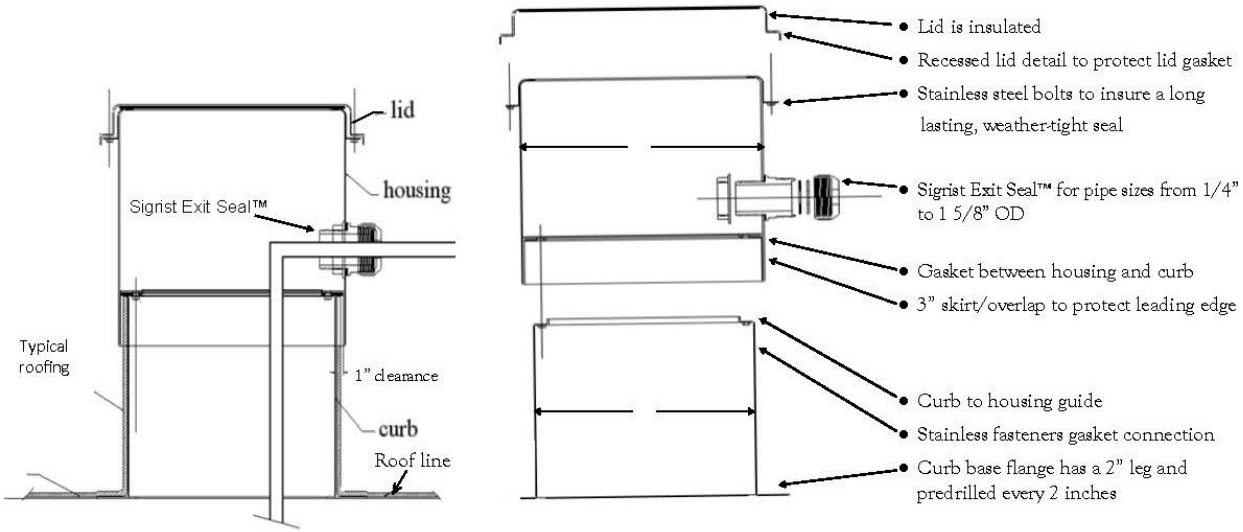

www.altaproductsllc.com

FIGURE 3 – TYPICAL PIPE AND CONDUIT ROUTING DETAIL FOR ROOF INSTALLATIONS

M. Base Refrigerant Management

1. The 72 ABW/CE is tasked to maintain a Refrigerant Management Program in accordance with the **Air Force Manual 32-7002 Refrigerant Management Program issued 4-Feb-2020**.
2. **ANSI/ASHRAE Standard 34, *Designation and Safety Classification of Refrigerants***, establishes a simple means of referring to common refrigerants and assigns safety classifications and refrigerant concentration limits based on toxicity and flammability data.

3. HQ AFMC Guidance (10 Jul 95 letter from HQ AFMC/CECS) strictly prohibits contractors from purchasing, providing or removing any refrigerants that contain either *chlorofluoromethane, chlorodifluoromethane or other "CFC" gases* (such as R-11, R-12, R-500, R-502 or R-503), to or from the government's inventory to perform contracts.
4. Contractors are prohibited from purchasing, providing, or removing any prohibited refrigerants to or from the government inventory. Refer to list of Prohibited Refrigerants below.
5. It is the obligation of 72 ABW/CE to account for the use of all contractor-provided refrigerants on Tinker AFB which is to be installed to contracted equipment, and this obligation consists of the following:
    a) Track Environmental Protection Agency (EPA) certifications for refrigerant technicians and refrigerant recovery equipment.
    b) Track refrigerant inventory levels for each type of refrigerant.
    c) Report on refrigerant emissions.
6. REMOVAL OF REFRIGERANT (Refrigerant Recovery). Recovery of refrigerant (as defined by 40 CFR 82), from existing, government-owned "appliances" (as defined by 40 CFR 82.152, i.e. HVAC, commercial refrigeration, industrial refrigeration or other refrigerant systems, except for small appliances), <u>will be performed by the Government</u> upon written notice from the contractor. However, contractors may remove government refrigerants from contracted equipment into government-furnished containers, only when so directed in writing by the Contracting Officer.
7. NEW REFRIGERANT. All refrigerant provided or furnished for use on Tinker AFB shall be produced and sold as new, virgin refrigerant. Use of recovered, recycled, reclaimed or other category of refrigerants (i.e. used refrigerant) is strictly prohibited. Contractors shall only use refrigerant that is approved for use at Tinker AFB unless otherwise approved in writing by 72 ABW/CE.
8. REFRIGERANTS APPROVED FOR USE AT TINKER A.F.B.*

    Refrigerant 32
    Refrigerant 454B
    Refrigerant 513A
    Refrigerant 134a
    Refrigerant 410A

* There are multiple refrigerants which are acceptable per current EPA regulations, but the current TAFB Refrigerant management policy is to simplify and standardize our refrigerant inventory. Therefore the refrigerants automatically approved for new equipment are only those listed in this section unless approved in writing by TAFB Base Civil Engineering. The repair of existing R-134A systems should use R-513A for system charging. The repair of existing R-410A systems should use R-32 for system charging of OUTDOOR UNITS ONLY. For the repair of indoor existing R-410A systems, consult Base Mechanical Engineering if refrigerant needs to be replaced or charged to evaluate in R-32 viability in accordance with IMC Section 1106.

9. <u>REFRIGERANTS PROHIBITED FROM USE AT TINKER A.F.B.</u> Prohibited refrigerants include all refrigerants other than approved refrigerants.
10. EXCEPTIONS.
    a) Excluded from the list of prohibited refrigerants are "process" systems utilized in production and/or manufacturing, unless otherwise prohibited by USAF or TAFB policy.
    b) Any other exceptions to the Base Refrigerant Management policy requirements must be approved in writing by the Base Civil Engineer for the specific equipment, system or project for which the refrigerant is required. Exceptions will be made as needed on a case-by-case basis only.

N. Contractor Certifications and Recordkeeping for Refrigerant Management

1. When required to install, remove or recover refrigerants pursuant to provisions of part N above, Contractors shall furnish the following in conjunction with the performance of contracted work:

   a) Prior to bringing technicians on base for installation or recovery of refrigerants to or from contracted equipment, the Contractor should submit to the Contracting Officer's Technical Representative (COTR): (1) A copy of the refrigerant technician's certification as required by 40 CFR (Code of Federal Regulations) part 82, subpart F; and (2) A copy of the certification to the EPA that the Contractor acquired refrigerant recovery equipment per 40 CFR 82.162.

   b) Prior to final acceptance of contract work, the Contractor should provide a record of the amount of refrigerant installed with the contracted equipment or recovered from equipment contracted for demolition into government furnished containers. In the case of commissioning new or retrofitted equipment, the Contractor shall provide the refrigerant amount determined to be the "Full Charge" as defined in 40 CFR 82.152.

   c) The Contractor shall provide information concerning refrigerant emissions.

   d) Prior to final acceptance of contract work, the Contractor shall provide to the COTR a record of any refrigerant losses to the atmosphere.

   e) Included with all warranty work, the Contractor shall provide to the Contracting Officer a record of all refrigerant losses to the atmosphere. The Contractor shall assume that the amount of refrigerant added to the equipment to bring it back to "Full Charge" is the amount of refrigerant that was emitted to the atmosphere.

O. Electrical and VFD Requirements

1. Comply with the Tinker AFB Base Electrical Standards (Appendix B) for the following:

   ~~a)~~ All Variable Frequency Driven (VFD) electric drives and motors.

   ~~b)~~ All low-voltage control wiring.

   ~~c)~~ All wiring and conduit for mechanical systems.

~~2.~~ Variable Frequency Driven (VFD) motor applications shall comply with all NEC rules for motor disconnect. In addition:

   ~~a)~~ VFD selection should include provisions for radio frequency (RF) shielding on incoming feeder side by either internal protection or cables.

   ~~b)~~ VFD selection should include provisions for radio frequency (RF) shielding on the outgoing motor side by either internal protection or cables.

   ~~c)~~ VFD selection shall include an integral means of disconnect by manufacturer design.

   ~~d)~~ When necessary to utilize a brake function, it shall be provided with a separate power supply.

   ~~e)~~ VFD's shall be set to limit motor speed from exceeding the motor manufacturer's design.

~~3.~~ Exhaust fan applications shall comply with all NEC rules for motor disconnect.

~~4.~~ Exhaust fan applications serving restrooms.

   ~~a)~~ Ventilation exhaust fans for restroom shall not control fans by the light switch. Restroom exhaust fan(s) shall either operate continuously or interlocked with the HVAC system to operate when the HVAC supply fan operates.

P. Anti-Terrorism Force Protection (ATFP) Requirements

1. UFC 4-010-01 DoD Minimum Antiterrorism Standards for Buildings applies to all facilities on Tinker AFB (latest edition).

2. ATFP provisions regarding Standard 18 – Emergency Air Distribution Shutoff: This provision is not applicable to small exhaust fans such as toilet exhaust fans, smoke purge (negative pressure) fans, or other fans where "interior pressure and airflow control would more efficiently prevent the spread of airborne contaminants and/or ensure the safety of egress pathways."

– End of Section –

IV. Appendix

This section includes the following: No. of Pages

- References ……2
- Abbreviations and Acronyms …….... 1
- Attachments
  - Table 1. Attachment of Rooftop Equipment in High-Wind Regions (FEMA) ……..…… 4
  - FACILITY-RELATED CONTROL SYSTEMS CYBERSECURITY GUIDELINE …… 28
  - OCWUT Requirements GUIDELINE …… 30

References

(Partial list - Not all inclusive)

UNITED FACILITIES CRITERIA

GENERAL

UFC 1-200-01 DoD Building Code (General Building Requirements)
UFC 1-200-02 High Performance and Sustainable Building Requirements

MECHANICAL

UFC 3-401-01 Mechanical Engineering
UFC 3-410-01 Heating, Ventilating, and Air Conditioning Systems
UFC 3-410-02 Direct Digital Control for HVAC and Other Building Control Systems
UFC 3-410-04N Industrial Ventilation
UFC 3-420-01 Plumbing Systems
UFC 3-420-02FA Compressed Air
UFC 3-430-01FA Heating and Cooling Distribution Systems
UFC 3-430-02FA Central Steam Boiler Plants
UFC 3-430-07 Inspection and Certification of Boilers and Unfired Pressure Vessels
UFC 3-430-08N Central Heating Plants
UFC 3-430-09 Exterior Mechanical Utility Distribution
UFC 3-430-11 Boiler Control Systems
UFC 3-440-01 Facility-Scale Renewable Energy Systems
UFC 3-450-01 Noise and Vibration Control
UFC 3-470-01 Lonworks® Utility Monitoring and Control System (UMCS)

MULTI-DISCIPLINARY AND FACILITY SPECIFIC

UFC 3-190-06 Protective Coatings and Paints
UFC 3-230-01 Water Storage, Distribution and Transmission
UFC 3-240-13FN Industrial Water Treatment Operation and Maintenance
UFC 3-310-04 Seismic Design for Buildings
UFC 3-430-09 Exterior Mechanical Utility Distribution
UFC 3-570-02A Cathodic Protection
UFC 3-570-06 O&M Cathodic Protection Systems
UFC 4-010-01 DoD Minimum Antiterrorism Standards for Buildings
UFC 4-010-06 Cybersecurity of Facility-Related Control Systems
UFC 4-211-01N Aircraft Maintenance Hangars: Type I, Type II and Type III, with Change 3; also see the Supplement ITG FY10-01
UFC 4-211-02 Aircraft Corrosion Control and Paint Facilities
UFC 4-440-01 WAREHOUSE AND STORAGE FACILITIES
UFC 4-510-01 Design: Medical Military Facilities
UFC 4-610-01 Administrative Facilities
UFC 4-826-10 Design: Refrigeration Systems for Cold Storage

FIRE PROTECTION

UFC 3-600-01 Fire Protection Engineering for Facilities
UFC 3-601-02 Operations and Maintenance: Inspection, Testing, and Maintenance of Fire Protection Systems

AIR FORCE PUBLICATIONS

AFI 32-1054, *Corrosion Control*

AFI 32-1066, *Backflow Prevention Program*

AFI 32-1068, *HEATING SYSTEMS AND UNFIRED PRESSURE VESSELS (14 MAY 2013)*

AFI 32-10141, (3 March 2011) – *PLANNING AND PROGRAMMING FIRE SAFETY DEFICIENCY CORRECTION PROJECTS*

AFI 23-204, *Organizational Fuel Tanks*

AFI 32-7044, *Storage Tank Environmental Compliance*

AFPD 90-17, Energy Management, and AFI 90-1701, Energy Management

AIR FORCE MANUAL 32-1084, Facility Requirements

ETL 03-1: *Storm Water Construction Standards*

ETL 11-25, *Implementation of Major and Area Source Rules as Applied to Boiler Tune-ups and Energy Assessments for the Boiler MACT Rule*

INDUSTRY STANDARDS AND CODES

A. ANSI/ASHRAE Standard 15 Safety Standard for Refrigeration Systems, latest edition

B. ANSI/ASHRAE Standard 34 Designation and Safety Classification of Refrigerants

C. ANSI/ASHRAE Standard 62.1 Ventilation for Acceptable Indoor Air Quality, latest edition

D. ANSI/ASHRAE/IES Standard 90.1 Energy Standard for Buildings Except Low-Rise Residential Buildings (latest edition)

E. ANSI/ASHRAE Standard 90.2 Energy Efficient Design of Low-Rise Residential Buildings (latest edition)

F. ASME Boiler and Pressure Vessel Code

G. ASME Boiler and Pressure Vessel Code, Section IX, "Welding and Brazing Qualifications,"

H. Gravity Sanitary Sewer Design and Construction, as jointly published by the Water Environment Federation and the American Society of Civil Engineers as the MOP FD-5

I. National Fire Protection Association

FEDERAL

A. 40 CFR (Code of Federal Regulations) part 82

B. Executive Order 13423 - Strengthening Federal Environmental, Energy, and Transportation Management

C. Executive Order 13693 - Planning for Federal Sustainability in the Next Decade

D. Executive Order - FEDERAL LEADERSHIP IN ENVIRONMENTAL, ENERGY, AND ECONOMIC PERFORMANCE

E. Energy Policy Act of 2005 (EPAct 2005)

F. EPA 40 CFR Part 63, Subpart JJJJJJ, National Emission Standards for Hazardous Air Pollutants for Industrial, Commercial, and Institutional Boilers Area Sources

G. Building Life-Cycle Cost Program (BLCC) available at the Federal Energy Management Program website: http://www1.eere.energy.gov/femp/information/download_blcc.html.

H. Attachment of Rooftop Equipment in High-Wind Regions, FEMA, July 2006

Abbreviations and Acronyms

72 ABW – 72d Air Base Wing, Tinker Air Force Base, Oklahoma

AFCEE – Air Force Center for Engineering and the Environment
AFCESA – Air Force Civil Engineer Support Agency
AF – Air Force
AFB – Air Force Base
AFI – Air Force Instruction
AFGM – Air Force Guidance Memorandum
AFMAN – Air Force Manual
AFMC – Air Force Materiel Command
ANG – Air National Guard
AFPD – Air Force Policy Directive
AFRC – Air Force Reserve Command
ANSI – *American National Standards Institute*
ASHRAE – **Official** name of the international professional technical society formerly known as the *American Society of Heating, Refrigerating and Air Conditioning Engineers, Inc.*
ATO – Authority to Operate

BCE – Base Civil Engineer
BCP – Base Comprehensive Plan

CATCODE – Category Code
CE – Base Civil Engineering
CECE – Base Civil Engineering Design & Construction
CECO – Base Civil Engineering Operations and Maintenance
CFR – Code of Federal Regulations
CS – Control Systems

DoD – Department of Defense

E.T.L. – Engineering Technical Letter

FOMA – Facilities Operation and Maintenance

IAW – in accordance with

MAJCOM – Major Command
MILCON – Military Construction
NFPA – National Fire Protection Association

NTE – Not to Exceed

OCWUT – Oklahoma City Water Utilities Trust
O&M – Operation & Maintenance
OH&P – Overhead and Profit
OSD – Office of the Secretary of Defense

RPIE – Real Property Installed Equipment

SIOH – Supervision, Inspection and Overhead
SRM – Sustainment, Restoration and Modernization

TAFB – Tinker Air Force Base

ATTACHMENTS FOLLOW

DOCUMENT CONTROL RECORD

ISSUE	REV	DATE	BY
ORIGINAL DRAFT FOR QC REVIEW	-0-	10-FEB-2017	KDW
ISSUED FOR BASE WIDE REVIEW	1.1	14-FEB-2017	KDW
ISSUED FOR APPROVAL	-0-	01-MAR-2017	KDW
ISSUED FOR APPROVAL	2.0	20-MAR-2018	KDW
DRAFT ISSUED FOR REVIEW	2.1	20-FEB-2019	KDW
ISSUED FOR APPROVAL	2.2	15-MAR-2019	KDW
ISSUED FOR DISTRIBUTION / USE	2.2	15-MAR-2019	KDW
DRAFT ISSUED FOR REVIEW	2.3	31-JAN-2020	KDW
ISSUED FOR QC REVIEW	2.4	18-JUN-2020	KDW
ISSUED FOR APPROVAL	2.5	05-AUG-2020	KDW

OCWUT Requirements

As applicable, Contractor shall construct water distribution mains, water service line piping systems, and tie-ins IAW with City of Oklahoma City Construction Standards and the Oklahoma Department of Environmental Quality (ODEQ) since the majority of water distribution system lines on base exterior to facilities are owned by the Oklahoma City Water Utilities Trust, OCWUT (System Owner), exclusive of dedicated fire water loops and other infrastructure owned by the base (or in the case of infrastructure assets in family housing, owned by BBC). Same for sanitary sewer collection system exterior to Tinker facilities. The utility owner (OCWUT) is the sole provider of these water and sanitary sewer utility services on the installation.

The utility owner (OCWUT) must be integrated prior to construction start by the Contractor. New system infrastructure and modifications of or connections to existing system infrastructure identified in the specifications and drawings must be coordinated with the utility owner (OCWUT). The utility owner must be integrated into the design, inspection of construction, and tie-in to existing utilities. Work will be accomplished by the Contractor. Any fees associated with connecting Contractor constructed infrastructure to the utility owner's system must be negotiated with the utility owner (OCWUT). All work on the system or facilities expected to connect to the system shall comply with the utility owner's specifications and construction standards. In no event shall Contractor cap, connect to, or otherwise touch the utility owner's infrastructure without the utility owner's express written permission.

The contractor shall comply with all applicable water distribution and wastewater collection system-related specifications and drawings as required by City of Oklahoma City construction standards, kept up to date at the following links:

Oklahoma City's Construction Standards: https://www.okc.gov/departments/public-works/engineer-architect-resources/standards

Inspection of applicable work will be performed by OCWUT or OCWUT designee and paid for by the Contractor directly to OCWUT.
Contact with OCWUT: Trey Perdue, TAFB Site Manager, OCWUT, trey.perdue@okc.gov, 405-297-1496.