APPENDIX: ROOM DATA SHEETS

The following room data sheets (RDSs) are a compilation of information contained in the *Design Guide* that identify spatial and programmatic requirements by space type. For simplification and clarity purposes, some spaces have been combined into a single RDS.

Topics:

General	Courthouse Spaces
Chapter 4	Courtrooms
Chapter 5	Jury Assembly Suite
Chapter 6	Judges' Chambers Suites
Chapter 7	Court Library Spaces
Chapter 8	Associated Appeals Clerks' Office Spaces
Chapter 9	Associated Probation and Pretrial Services Office Spaces
Chapter 10	Associated Other Court Unit Office Spaces
Chapter 11	Shared Support Spaces

*Refer to full US Courts Design Guide 2021, except herein as noted adaptation for Agency Space Requirements for **RLP XXXXXX**.*

Where noted, refer to the ASR Exhibit - Room List (Room-by-Room Requirement Summary) for room finishes. Refer to Room-by-Room Requirement Summary for quantities and special requirements. Red text on the room data sheets denotes deleted (strike through), alternative and/or minimum room requirements.

Net square feet represents the actual occupied area of a floor, not including accessory unoccupied areas (stairs, elevator and HVAC shafts, mechanical rooms, etc.) or the thickness of walls. US Courts Design Guide circulation factors are modified in this ASR to derive the USF, or ABOA.

Notes about proposals for reuse of existing tenant improvement, finishes or systems: If existing carpet is proposed, then min acceptable alternative is defined as carpet less than 2 yrs and unaffected by new alterations, delivered professionally cleaned, and acceptable compatible with proposed new finishes.

General Notes:

- The graphics on the RDS are not to scale and are for illustrative purposes only.
- The RDS are meant to be used as a guideline. It is essential that the user obtain additional information from the court, the General Services Administration (GSA), and other participants and users to tailor the design response to the specific court requirements.
- The RDS should be used in conjunction with other facility design standards including but not limited to: The *U.S. Courts Design Reference Manual* and applicable GSA PBS P-100.
- The interpretation and application of the information provided in the RDS into specific design solutions will require the overall review & confirmation of the design by the court, the Administrative Office of the U.S. Courts (AOUSC), the GSA, and the United States Marshals Service (USMS).
- The design architect is responsible for the coordination and conformance with the *Design Guide*, and all applicable laws, codes regulations, and governmental facility standards.
- Finishes indicated on the RDS show a range of acceptable finishes per space; however, this list should not be considered comprehensive. Final finish selection should be determined by the design architect and project stakeholders.
- Fixtures, furniture, and equipment (FFE) requirements should be determined on a project-to-project basis to satisfy the local needs. FFE shown on the graphics is notional and should not be considered comprehensive.
- Furniture, accessories, and equipment indicated with an asterisk (*) is funded by GSA.
- Furniture shown in the RDS are general guidelines of potential layouts. Final furniture design and procurement will be determined by individual project requirements.

Definitions, Legends and Symbols

Security Definitions

- Public 1 - Unscreened Public Access
- Public 2 - Screened Public Access
- Public 3 - Screened Public Access, Locked When Not in Use
- Restricted 1 - Restricted Access, Uncontrolled
- Restricted 2 - Restricted Access, Remote Access Control
- Restricted 3 - Restricted Access, Direct Access Control/Key Lock
- Restricted 4 - Restricted Access, Counter/Window Service
- P - Privacy Lock
- Secure 1 - Secure Access, Authorized Staff
- Secure 2 - Secure Access, Prisoner/Security Staff

Symbols

Handicap Spectator Seating

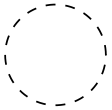

5’-0” Wheelchair Turning Radius

Finish Legend

Abbreviation	Material
ACP	Acoustical Ceiling Panel or Tile
AWP	Acoustical Wall Panel
CPT	Carpet
CR	Chair Rail
CT	Ceramic Tile
FWC	Fabric Wall Covering
GL	Glass
GWB	Gypsum Wall Board
MTL	Metal
PLAS	Plaster
PLY	Plywood on MTL Studs
PNT-1	Latex paint with eggshell finish. Preferred Finish, unless noted otherwise.
PNT-2	Latex paint with semi-gloss finish. To be used in wet areas such as service units and restroom wet walls.
PNT-3	Water-based catalyzed epoxy or equivalent. To be used for the urinalysis lab.
RAF	Raised Access Floor
ST	Stone
SVT	Solid/Premium Vinyl Tile
SV	Sheet Vinyl
TZ	Terrazzo
VCT	Vinyl Composition Tile
V/RB	Vinyl/Rubber Base

Finish Legend (cont.)

Abbreviation	Material
WD	Wood
WD Wainscot	Wood Wainscot

Room Data Sheet Space Nomenclature

The space nomenclature is used for the General Courthouse Spaces section and denotes a space type followed by a square footage for the space. The remaining Room Data Sheet sections are chapter specific and are noted with the corresponding chapter.

Abbreviation	Space Type
CR	Conference Room
OS	Office Support (Shared space ie., Copier, Printer, Faxes)
PO	Private Office
REC	Reception
SL	Soundlock
ST	Storage
SU	Service Unit
VT	Vault
WS	Workstation

General Courthouse Spaces
Space and Ceiling Requirements

SL - 80

Soundlock

80 NSF (7.4 Nm²)

Architectural:

General Requirements:

Security Level:	Public 3
Ceiling Height:	10'-0"
Acoustics	NIC 55-60 - Confidential

Finishes:

Wall:	~~WD, ST, MTL, AWP, PLAS,~~ PNT-1
Floor:	CPT, ~~WD~~
Base:	~~WD,~~ V/RB
Ceiling:	WD, MTL, ACP, PNT-1

Building Systems:

Illumination:

Horizontal:	30-40 fc
Vertical:	5-10 fc
Lighting Control:	Yes

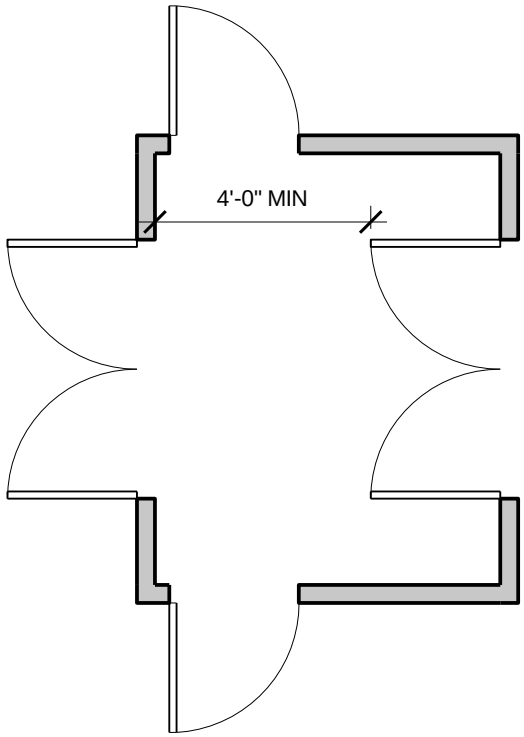

LESSOR:_____GOVERNMENT:_____

General Courthouse Spaces
Space and Ceiling Requirements

ST - 50

Storage **50 NSF (4.7 Nm²)**
Judge's Chambers Storage **64 NSF**

Architectural:

General Requirements:

Security Level:	Restricted 3
Ceiling Height:	10'-0"

Finishes:

Wall:	PNT-1
Floor:	VCT
Base:	V/RB
Ceiling:	ACP

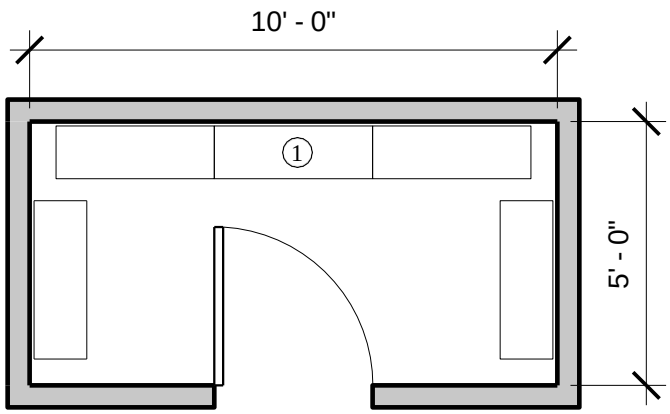

Legend:

1 Shelves

General Courthouse Spaces
Space and Ceiling Requirements

ST - 80

Storage

80 NSF (7.4 Nm²)

Architectural:

General Requirements:

Security Level:	Restricted 3
Ceiling Height:	10’-0”

Finishes:

Wall:	PNT-1
Floor:	VCT
Base:	V/RB
Ceiling:	ACP

Fixtures, Furniture, and Equipment (FFE)

- Shelves: Open shelves 18” (450 mm) deep on 2-3 walls, movable or fixed

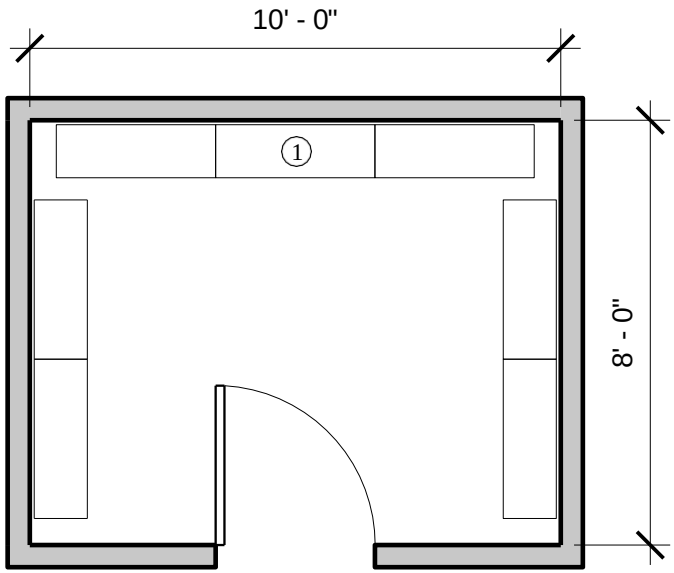

Legend:

1 Shelves

LESSOR:_____GOVERNMENT:_____

General Courthouse Spaces
Space and Ceiling Requirements

WS - 64

Workstation

64 NSF (5.8 Nm²)

Architectural:

General Requirements:

Security Level:	Restricted 1

Finishes:

Wall:	Varies (based on location)
Floor:	Varies (based on location)
Base:	Varies (based on location)
Ceiling:	Varies (based on location)

Fixtures, Furniture, and Equipment (FFE)

- 8’ x 8’ systems furniture workstation
- Chair

Building Systems:

Security:

- Security intercom (associated chamber space)
- Duress alarm (associated chamber space)
- CCV monitor (associated chamber space)
- Remote door - release mechanism (associated chamber space)

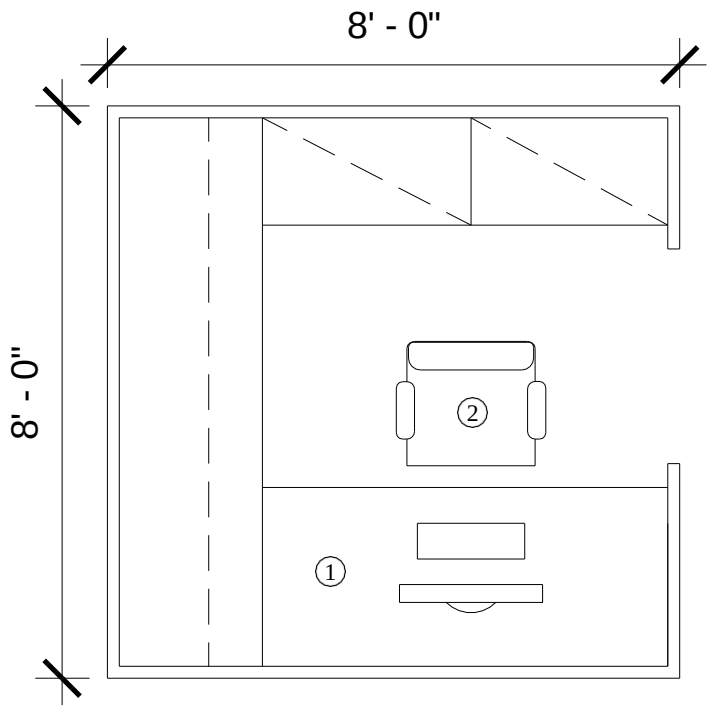

Legend:

1 Systems Furniture

2 Chair

General Courthouse Spaces
Space and Ceiling Requirements

PO - 100

Private Office

100 NSF (9.3 Nm²)

Architectural:

General Requirements:

Security Level:	Restricted 1
Ceiling Height:	9'-0"
Acoustics	NIC 35 - Normal

Finishes:

Wall:	PNT-1, ~~CR (Judge's Chambers Suite)~~
Floor:	CPT
Base:	V/RB
Ceiling:	ACP

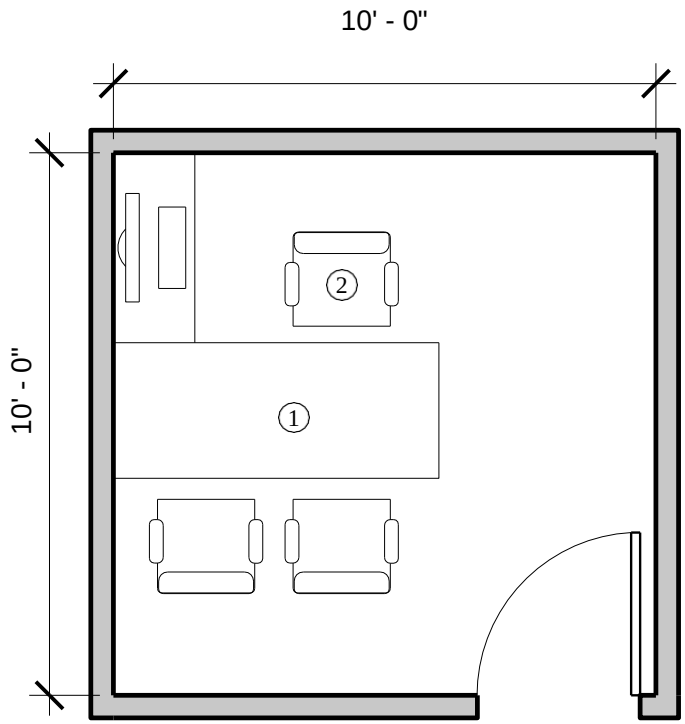

Legend:

1 Desk

2 Chair

General Courthouse Spaces
Space and Ceiling Requirements

PO - 120

Private Office 120 NSF (13.9 Nm²)

Architectural:

General Requirements:

Security Level:	Restricted 1
Adjacent to:	
Ceiling Height:	9'-0"
Acoustics	NIC 35 - Normal (Probation and Pretrial Services Offices)

Finishes:

Wall:	PNT-1, ~~CR (Judge's Chambers Suite)~~
Floor:	CPT
Base:	V/RB
Ceiling:	ACP

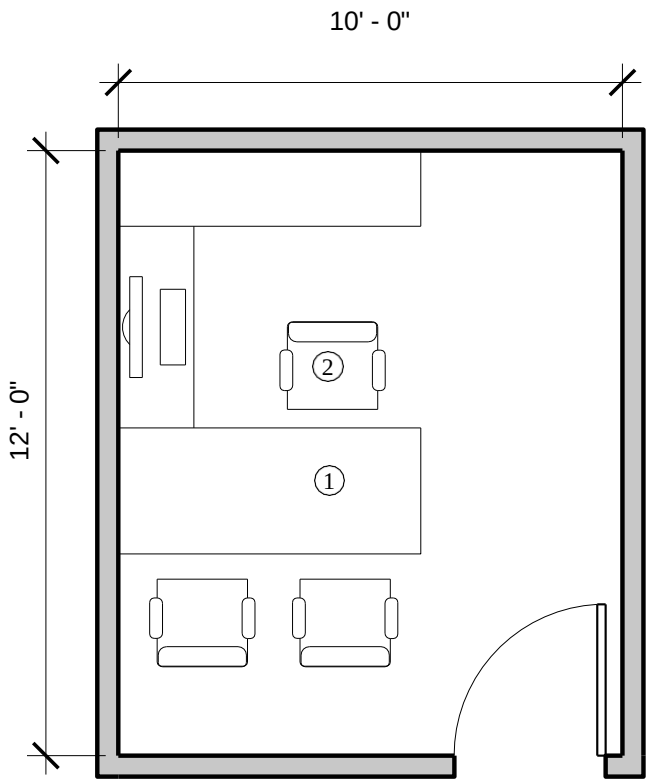

Legend:

1 Desk

2 Chair

General Courthouse Spaces
Space and Ceiling Requirements

PO - 150

Private Office 150 NSF (13.9 Nm²)

Architectural:

General Requirements:

Security Level:	Restricted 3
Ceiling Height:	9'-0"
Acoustics	NIC 35 - Normal (Probation and Pretrial Services Offices) NIC 40 - Normal (Court of Appeals Clerks' Offices) NIC 55 - Confidential (Federal Public Defender's Trial Preparation)

Finishes:

Wall:	PNT-1, ~~CR (Judge's Chambers Suite)~~
Floor:	CPT
Base:	V/RB
Ceiling:	ACP

Building Systems:

Security:

- CCV monitor (law clerk office)
- Duress alarm (law clerk office, professional staff)
- Security intercom (law clerk office)
- Remote door - release mechanism (law clerk office)

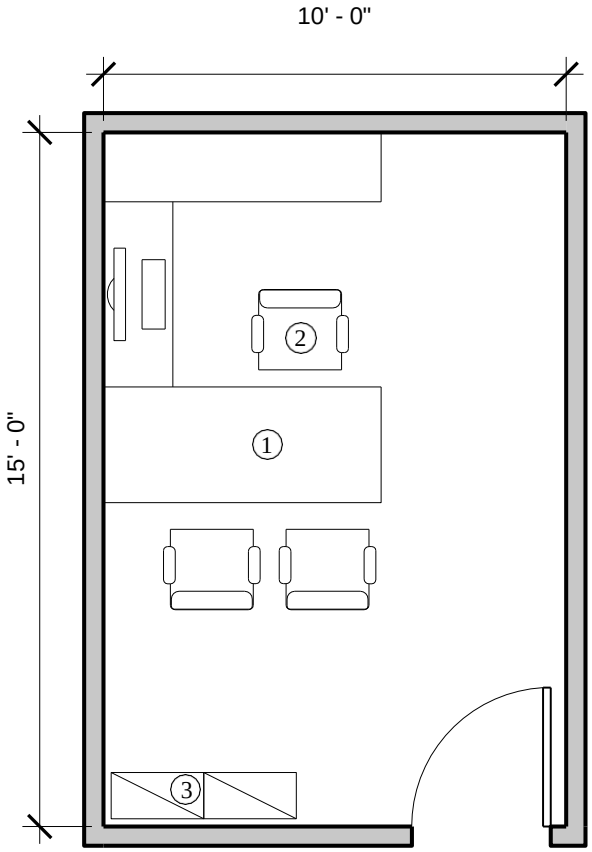

Legend:

1. Desk
2. Chair
3. File Cabinet

LESSOR:_____GOVERNMENT:_____

General Courthouse Spaces
Space and Ceiling Requirements

PO - 180

Private Office — 180 NSF (16.7 Nm²)

Architectural:

General Requirements:

Security Level:	Restricted 3
Ceiling Height:	9'-0"
Acoustics	NIC 35 - Normal (Probation and Pretrial Services Offices) NIC 40 - Normal (Court of Appeals Clerks' Offices) NIC 55 - Confidential (Pre-Argument/Conference Attorney)

Finishes:

Wall:	PNT-1, ~~CR (Judge's Chambers Suite)~~
Floor:	CPT
Base:	V/RB
Ceiling:	ACP

Building Systems:

Security:

- Duress alarm (deputy circuit librarian)

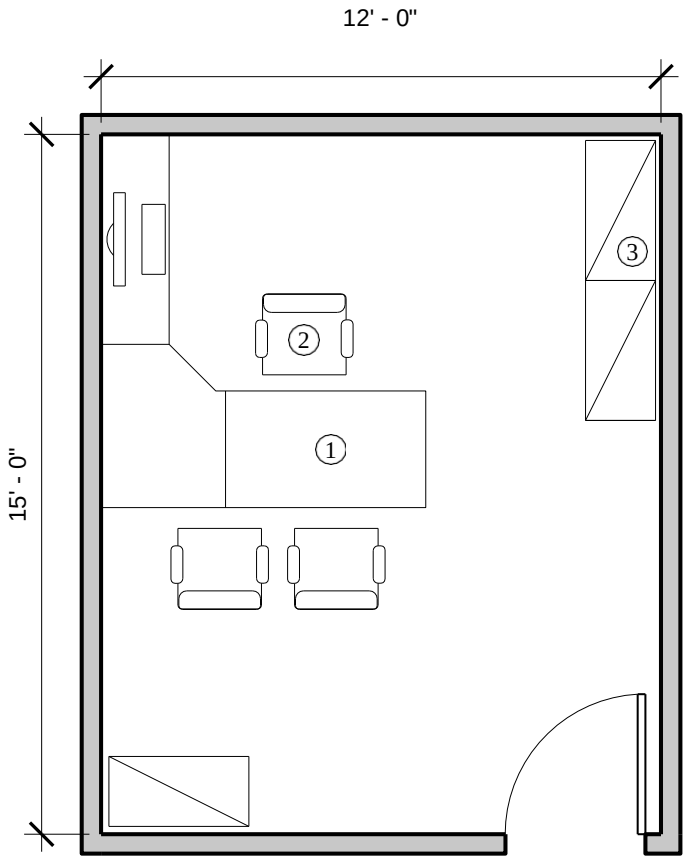

Legend:

1. Desk
2. Chair
3. File Cabinet

General Courthouse Spaces
Space and Ceiling Requirements

PO - 240

Private Office 240 NSF (22.3 Nm²)

Architectural:

General Requirements:

Security Level:	Restricted 3
Ceiling Height:	9'-0"
Acoustics	NIC 35 - Normal (Probation and Pretrial Services Offices) NIC 40 - Normal (Court of Appeals Clerks' Offices) NIC 55 - Confidential (Pre-Argument/Conference Attorney and Bankruptcy Administrator)

Finishes:

Wall:	PNT-1, ~~CR (Judge's Chambers Suite)~~
Floor:	CPT
Base:	V/RB
Ceiling:	ACP

Building Systems:

Security:

- Duress alarm (circuit librarian)

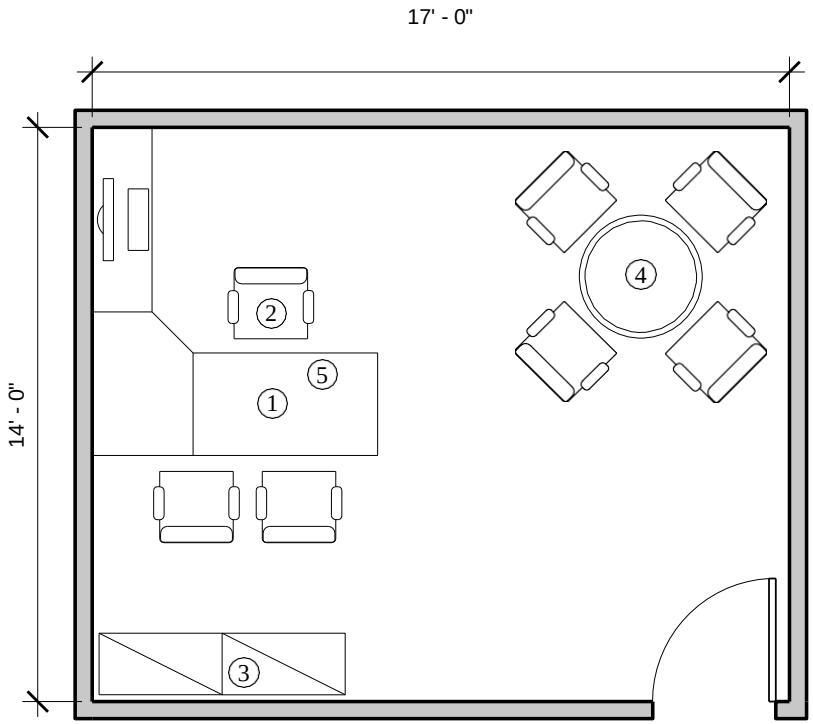

Legend:

1. Desk
2. Chair
3. File Cabinet
4. Table
5. Duress Alarm

LESSOR:_____GOVERNMENT:_____

General Courthouse Spaces

Space and Ceiling Requirements

VT - 20

Safe or Vault

20 NSF (1.6 Nm²)

Architectural:

Finishes:

Wall:	Varies (based on location)
Floor:	Varies (based on location)
Base:	Varies (based on location)
Ceiling:	Varies (based on location)

Space Notes:

preferred, but not required room construction: Minimum requirement of a standard constructed room with a locking door that will be a separate key scheme.

1. Partition construction :
- Slab to slab, (2) layers 5/8" type X GWB both sides, 3-5/8" 18-GA steel studs 16" o.c
- Maximum security steel mesh (ASM.50-13F) provided on the inner side of wall board
- Security screen attached to floor slab and structure above, welded together on studs to form a continuous barrier against entry
2. Door construction:
- UL-labeled class B, 18-gauge, metal fire doors constructed with 14-gauge hardware reinforcements
- 16-gauge steel frames with three hinges, high quality, three-tumbler combination lock to secure the door for after-hours protection
- Key lock to be provided for business hours after the alarm has been turned off and combination lock is dialed in., emergency egress hardware
3. Reference GSA PBS P-100 for HVAC, telecom, fire alarm, data, and security system requirements

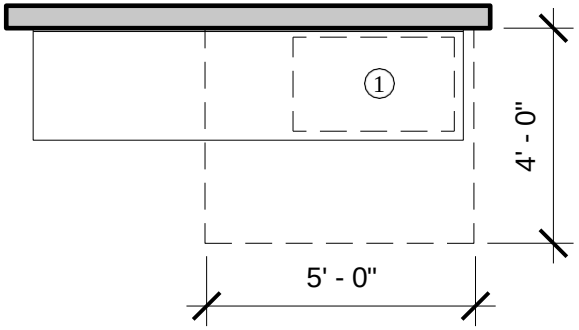

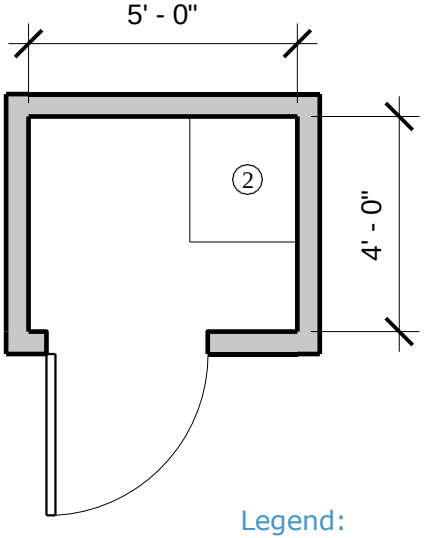

Legend:

1 Under-Counter Safe

2

General Courthouse Spaces
Space and Ceiling Requirements

VT - 150

Vault **150 NSF (14 Nm²)**

Architectural:

General Requirements:

Security Level:	Restricted 3
Adjacent to:	Restricted Corridor
Ceiling Height:	9'-0"

Finishes:

Wall:	PNT-1
Floor:	VCT
Base:	V/RB
Ceiling:	ACP

Building Systems:

Security:

Duress Alarm:	Yes

Space Notes:

preferred, but not required room construction: Minimum requirement of a standard constructed room with a locking door that will be a separate key scheme.

1. Partition construction:
- Slab to slab, (2) layers 5/8" type X GWB both sides, 3-5/8" 18-GA steel studs 16" o.c, 2-hour rated wall
- Maximum security steel mesh (ASM.50-13F) provided on the inner side of wall board
- Security screen attached to floor slab and structure above, welded together on studs to form a contiguous barrier against entry
2. Door construction:
- UL-labeled class B, 18-gauge, metal fire doors constructed with 14-gauge hardware reinforcements
- 16-gauge steel frames with three hinges, high quality, three-tumbler combination lock to secure the door for after hours protection
- Key lock to be provided for business hours after the alarm has been turned off and combination lock is dialed in., emergency egress hardware
3. Reference GSA PBS P-100 for HVAC, telecom, fire alarm, data, and security system requirements

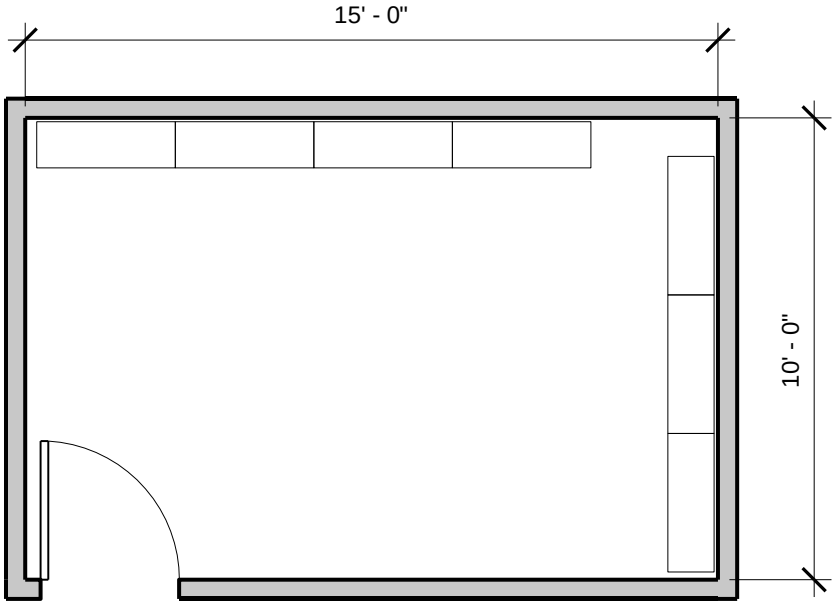

General Courthouse Spaces
Space and Ceiling Requirements

CR - 300

Conference Room

~~300 NSF (27.9 Nm²)~~ **240 NSF**

Architectural:

General Requirements:

Security Level:	Restricted 3
Ceiling Height:	10'-0"
Acoustics	NIC 55 ~~–~~ Confidential, minimum of NIC 35 (normal)

Finishes:

Wall:	PNT-1
Floor:	CPT
Base:	V/RB
Ceiling:	ACP

Building Systems:

Illumination:

Horizontal:	30-50 fc
Vertical:	10-15 fc
Lighting Control:	Yes
Emergency Lighting:	Yes

Mechanical:

Air Changes:	8/hour

Space Notes:

1. Conference room for meetings with fewer than 20 occupants.

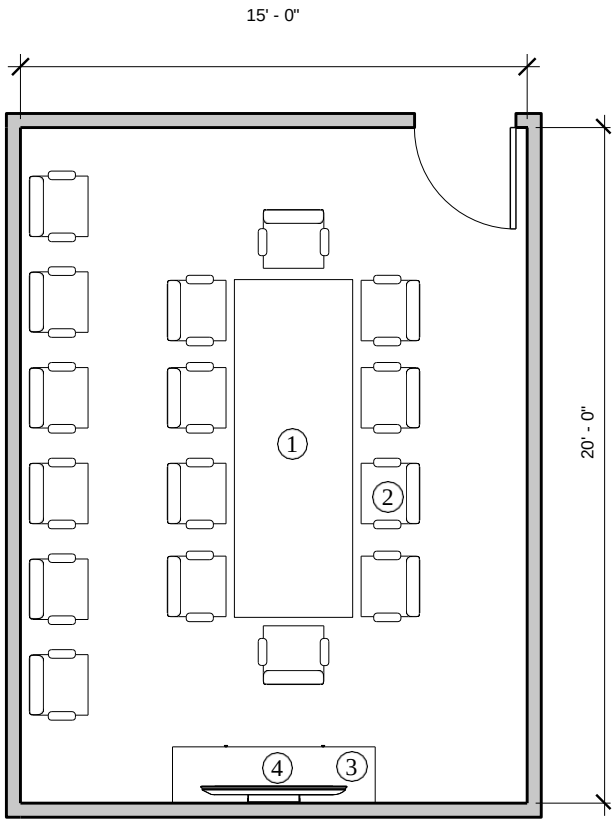

Legend:

1. Table
2. Chairs
3. Credenza
4. Monitor

General Courthouse Spaces
Space and Ceiling Requirements

SU - 200

Staff Break Room 200 Min-600 Max NSF (18.6-55.8 Nm²)

Architectural:

General Requirements:

Adjacent to:	Restricted Corridor
Ceiling Height:	10'-0"

Finishes:

Wall:	PNT-2
Floor:	VCT
Base:	V/RB
Ceiling:	ACP

Building Systems:

Illumination:

Horizontal:	20-30 fc
Vertical:	5-10 fc
Lighting Control:	Yes

Space Notes:

1. Allocate 25 NSF (2.32 Nm2) for every three staff members, plus 20 NSF (1.9 Nm2) for a service unit.
2. Accommodate a sink, a microwave, a coffeemaker, ~~and potentially vending machines.~~

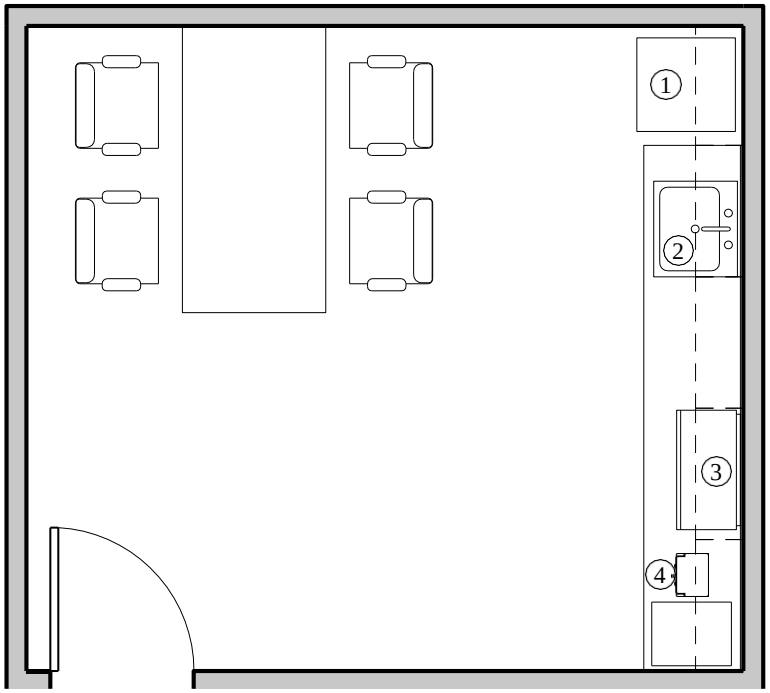

Legend:

1. Full-size refrigerator
2. Sink
3. Microwave
4. Coffeemaker

LESSOR:_____GOVERNMENT:_____

General Courthouse Spaces
Space and Ceiling Requirements

OS - 01

Printer/Copier/Fax Area	**60 NSF (5.6 Nm²)**
Shredder	**25 NSF (2.3 Nm²)**

Architectural:

General Requirements:

Adjacent to:	Workstations

Finishes:

Wall:	Varies (based on location)
Floor:	Varies (based on location)
Base:	Varies (based on location)
Ceiling:	Varies (based on location)

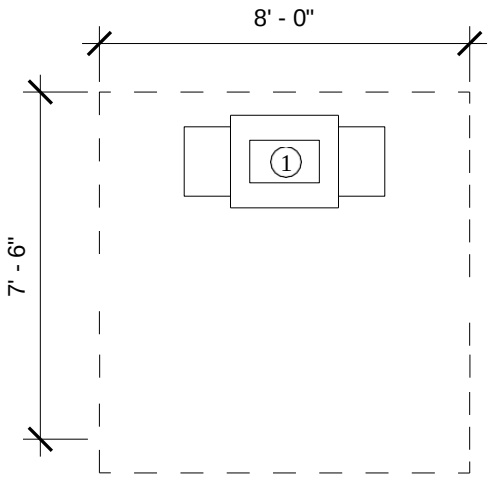

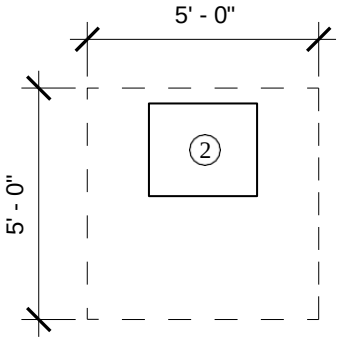

Legend:

1 Printer, Copier, Fax

2 Shredder

General Courthouse Spaces
Space and Ceiling Requirements

OS - 03

Copier, Low Volume	**50 NSF (4.7 Nm²)**
Copier, Medium Volume	**80 NSF (7.4 Nm²)**
Copier, High Volume	**120 NSF (11.2 Nm²)**

Architectural:

General Requirements:

Adjacent to:	Workstations
Ceiling Height:	10’-0”

Finishes:

Wall:	PNT-1
Floor:	VCT
Base:	V/RB
Ceiling:	ACP

Fixtures, Furniture, and Equipment (FFE)

- Work Surface: copier, work surface, supplies storage (staff print/copier/scanner)
- Storage: to accommodate supplies, 12” (300-mm) D shelves (staff printer/copier/scanner)

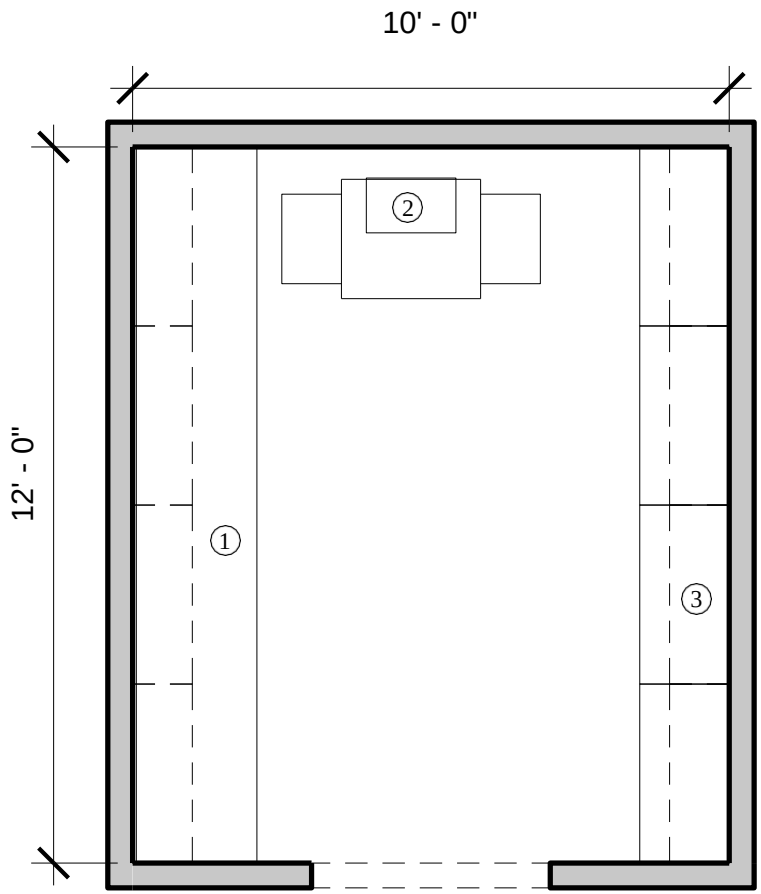

Legend:

1. Counter
2. Copier
3. Storage

General Courthouse Space
Space and Ceiling Requirements

OS - 04

Work Area
Minimum **195 NSF (18.1 Nm²)**

Architectural:

General Requirements:

Security Level:	Restricted 1
Ceiling Height:	9'-0"

Finishes:

Wall:	PNT-1
Floor:	VCT
Base:	V/RB
Ceiling:	ACP

Space Notes:

1. Assign 15 NSF (1.4 Nm2) per staff member. Minimum area is 195 NSF (18.1 Nm2).
2. Work area is inclusive of NSF alloted for a work table.

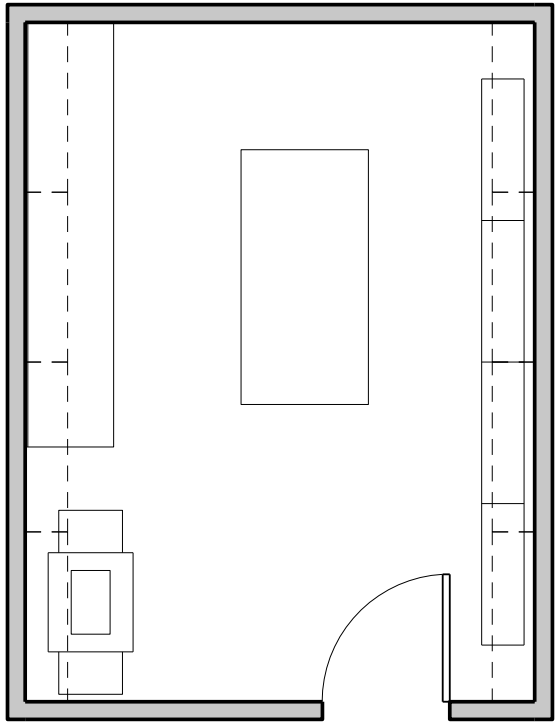

Courtrooms

Space and Ceiling Requirements

Bankruptcy Judge Courtroom 1,800 NSF (167.2 Nm²)

Architectural:

General Requirements:

Security Level:	Public 3, Restricted 3
Adjacent to:	Public Waiting Area
Ceiling Height:	16'-0" Minimum acceptable 11'-0"
Acoustics	NIC 55-60 - Confidential

Finishes:

Wall:	~~WD, ST, MTL~~, AWP, ~~PLAS,~~ PNT-1
Floor:	CPT, ~~WD~~, RAF (preferred not req.)
Base:	WD, V/RB
Ceiling:	~~WD, MTL,~~ ACP, PNT-1

Building Systems:

Illumination (Horizontal/Vertical):

Judge's Bench	50-55 fc / 20-25 fc
Court Reporter	50-55 fc / 20-25 fc
Jury Box	50-55 fc / 20-25 fc
Attorney Witness Area	40-50 fc / 15-20 fc
Witness Box	40-50 fc / 15-20 fc
News Media Room	30-40 fc / 15-20 fc
Attorney Work Room	30-40 fc / 15-20 fc
Attorney/Witness Room	30-40 fc / 15-20 fc
Public Seating	40-50 fc / 5-10 fc

Lighting Control:	Yes
Emergency Power:	Yes
Emergency Lighting:	Yes

Mechanical:

Air Changes:	6-8/hour

Building Systems (con't):

Security:

- CCV camera
- Duress alarm
- Card reader
- Walk-through metal detector (only for trials with high security)
- Ballistic-resistant material capability at judge's bench and deputy clerk station
- (2) 120-volt outlets connected to emergency generators outside of courtroom

Millwork

- (1) Judge's bench
- (1-2) Deputy clerk station
- (1) Court reporter/recorder station
- Recording equipment cabinet
- (1) Law clerk station
- (1-2) Witness box
- Lectern (movable), accommodate a microphone and task lighting
- (75-82 and four wheelchairs) Spectator seating

Furniture and Equipment

- (1) Judge's chair: swivel, tilt
- (4) Task chair: swivel
  - (2) Deputy clerks
  - (1) Court reporter/recorder
  - (1) Law clerk
- (1) Chair (interpreter): swivel, movable
- (1) Chair (witness): swivel, movable
- (2) Tables for attorneys and litigant*
- Chair (attorney and litigants): (4) chairs per table, extra chairs to be stored outside of courtroom
- (1) Clock

Courtrooms
Space and Ceiling Requirements

Bankruptcy Judge Courtroom 1,800 NSF (167.2 Nm²)

Legend:

1. Spectator Seating
2. Movable Rail
3. Movable "Smart" Table
4. Witness Box
5. Judge's Bench
6. Law Clerk Station
7. Court Reporter/Deputy Clerk Station
8. Lectern

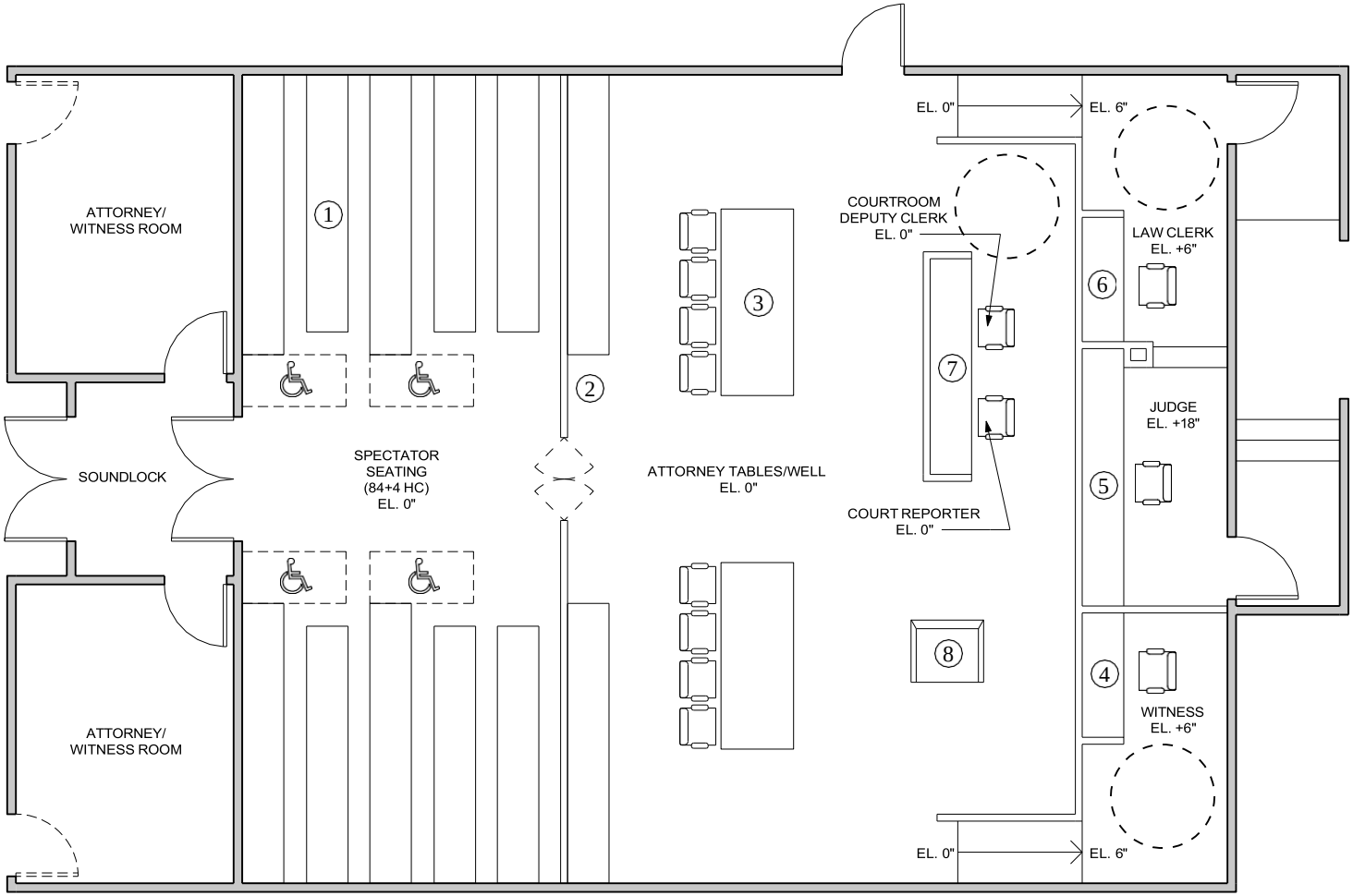

LESSOR:_____GOVERNMENT:_____

Associated Courtroom Spaces
Space and Ceiling Requirements

Public Waiting Area 400 NSF (37.2 Nm²)

Architectural:

General Requirements:

Security Level:	Public 2
Adjacent to:	Courtroom
Acoustics	NIC 25 - Normal

Finishes:

Wall:	~~ST, WD, GL, MTL,~~ PNT-1
Floor:	~~TZ, ST~~ CPT or LVT
Base:	~~TZ, ST~~ V/RB
Ceiling:	ACP, ~~WD, MTL,~~ PNT-1

Building Systems:

Security:

- CCV camera

Fixtures, Furniture, and Equipment (FFE):

- (TBD) Benches

Space Notes:

1. The design and furnishings for the public waiting areas should be consistent with the design intent of the public lobby and public circulation.

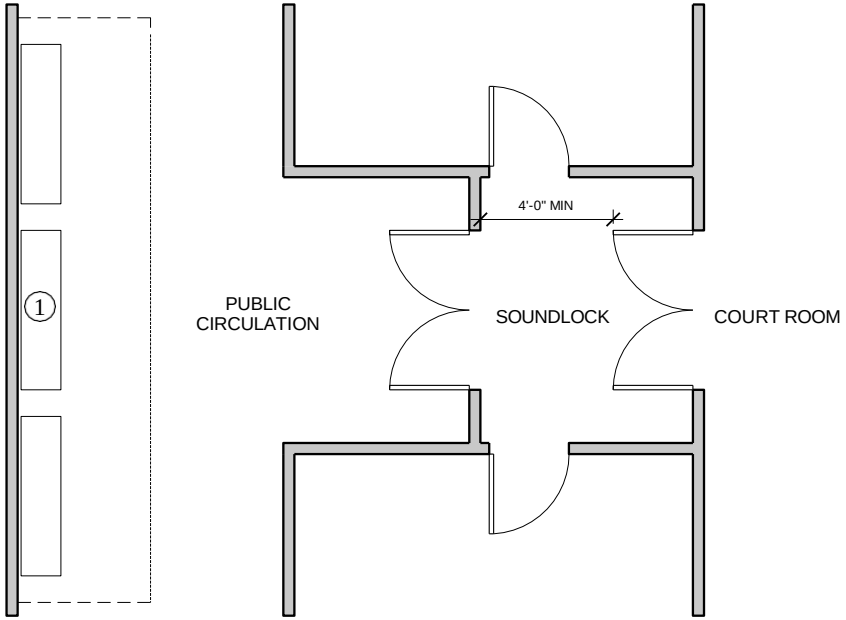

Legend:

1 Benches

Associated Courtroom Spaces
Space and Ceiling Requirements

Attorney/Witness Room 150 NSF (14.0 Nm²)

Architectural:

General Requirements:

Security Level:	Public 2
Adjacent to:	Soundlock, Public Waiting Area
Ceiling Height:	10'-0"
Acoustics	NIC 55 ~~-~~ Confidential, min-NIC 40

Finishes:

Wall:	PNT-1, ~~CR~~
Floor:	CPT
Base:	V/RB, ~~WD~~
Ceiling:	ACP

Building Systems:

Illumination:

Horizontal:	30-40 fc
Vertical:	15-20 fc
Lighting Control:	Yes

Fixtures, Furniture, and Equipment (FFE)

- (1) Small conference table
- (4) Arm chairs

Space Notes:

1. Provide occupancy indicator for each attorney/witness room.

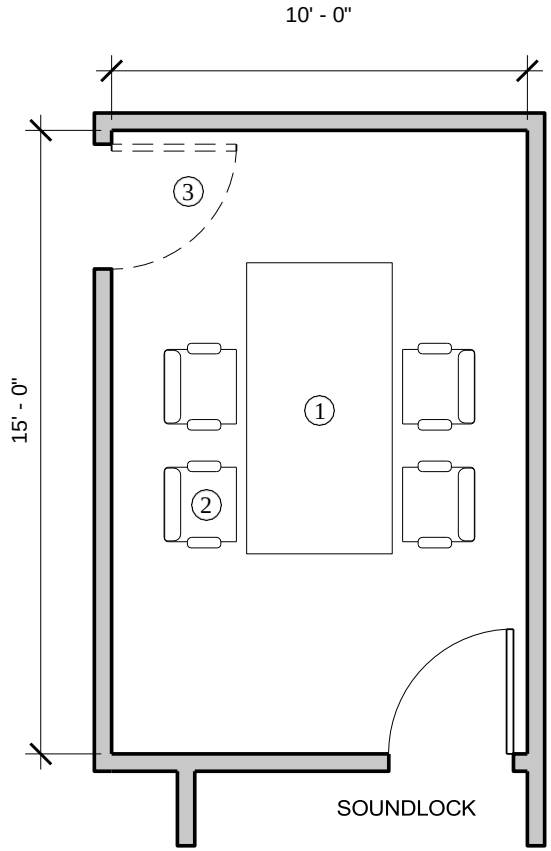

Legend:

1. Table
2. Chair
3. (Optional) Door into Public Corridor

LESSOR:_____GOVERNMENT:_____

Judges' Chambers Suites
Space and Ceiling Requirements

Magistrate Judge's Chambers Office **400 NSF (37.2 Nm²)**
Bankruptcy Judge's Chamber Office **Same**

Architectural:

General Requirements:

Security Level:	Restricted 1, 3
Adjacent to:	Conference/Reference Room, Judicial Assistant, Vestibule
Ceiling Height:	10'-0"
Acoustics	NIC 50 - Confidential

Finishes:

Wall:	~~WD,~~ PNT-1, ~~FWC, WD Wainscot~~
Floor:	CPT, ~~WD~~
Base:	V/RB, ~~WD~~
Ceiling:	ACP, PNT-1

Building Systems:

Illumination:

Horizontal:	30-50 fc
Vertical:	10-15 fc
Lighting Control:	Yes
Emergency Power:	Yes
Emergency Lighting:	Yes

Security:
- Duress alarm

Millwork:
- Bookshelves: 3LF x 10" D: 10, per suite

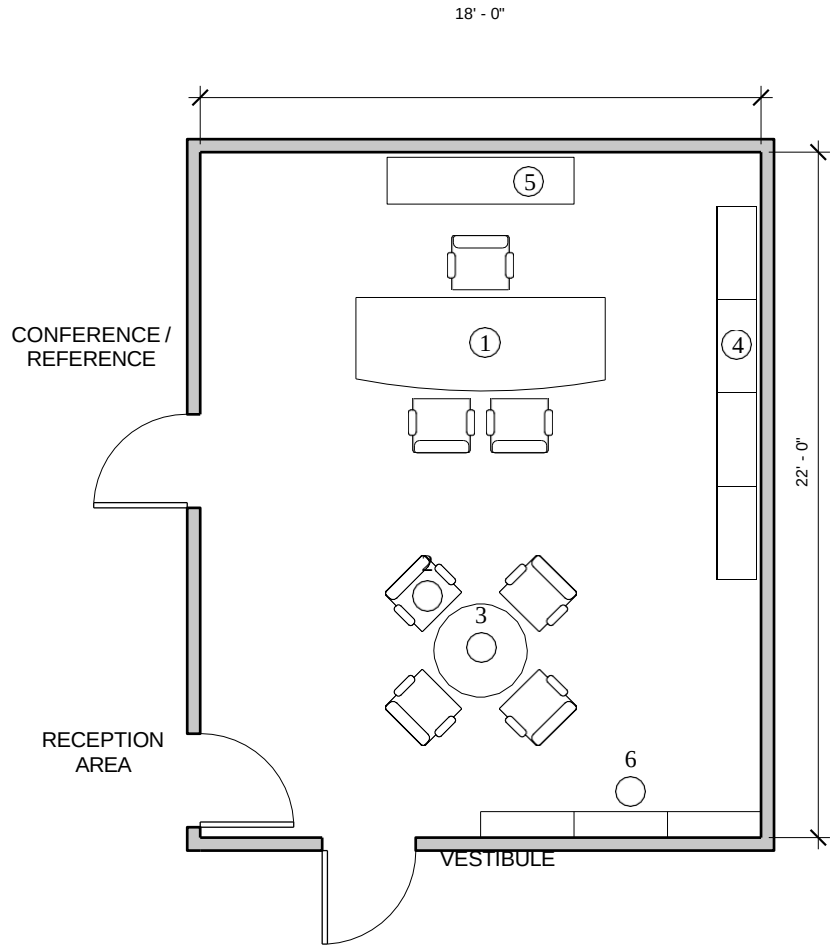

Space Notes:
1. Ballistic-resistant exterior windows per USMS.
2. Location and quantity of bookshelves are at the judge's discretion.

Legend:

(1) Desk	(4) Filing Cabinet
(2) Table	(5) Credenza
(3) Chair	(6) Bookshelves

LESSOR:_____GOVERNMENT:_____

Judges' Chambers Suites
Space and Ceiling Requirements

Circuit Judges' Non-Resident Office 240 NSF (22.3 Nm²)

Architectural:

General Requirements:

Security Level:	Restricted 1, 3
Adjacent to:	Reception Area, Vestibule
Ceiling Height:	10'-0"
Acoustics	NIC 50 - Confidential

Finishes:

Wall:	WD, PNT-1, FWC, WD Wainscot
Floor:	CPT, WD
Base:	V/RB, WD
Ceiling:	ACP, PNT-1

Building Systems:

Illumination:

Horizontal:	30-50 fc
Vertical:	10-15 fc
Lighting Control:	Yes
Emergency Power:	Yes
Emergency Lighting:	Yes

Security:

- Duress alarm

Millwork:

- Bookshelves: 3LF x 10" D: 3, per suite

Space Notes:

1. Ballistic-resistant exterior windows per USMS.
2. Location and quantity of bookshelves are at the judge's discretion.

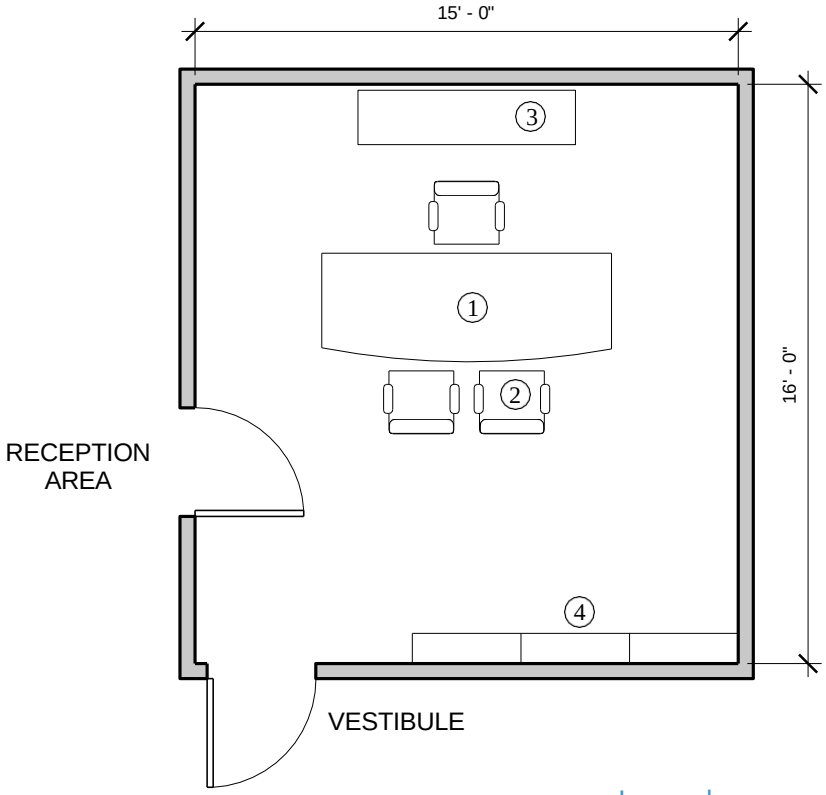

Legend:

1. Desk
2. Chair
3. Credenza
4. Bookshelves

Associated Chamber Space

Space and Ceiling Requirements

Judge's Private Toilet — 56 NSF (5.2 Nm²)

Architectural:

General Requirements:

Security Level:	Privacy Lock
Adjacent to:	Vestibule
Ceiling Height:	10'-0"

Finishes:

Wall:	PNT-2~~, CT Wainscot~~
Floor:	CT
Base:	CT
Ceiling:	PNT-2

Building Systems:

Illumination:

Horizontal:	20-30 fc
Vertical:	5-10 fc
Lighting Control:	Yes

Space Notes:

1. Designed to be adaptable for judges with a disability.
2. A cabinet should accommodate a sink and a drawer with storage below.

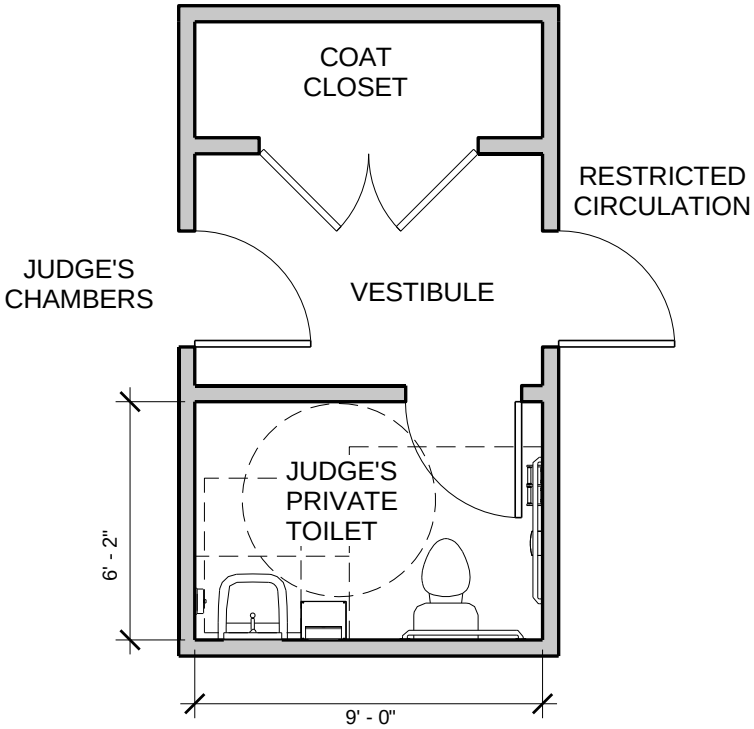

LESSOR:_____GOVERNMENT:_____

Associated Chamber Space

Space and Ceiling Requirements

Filing Room

~~140 NSF (13.0 Nm²)~~ **60 NSF**

Architectural:

General Requirements:

Security Level:	Restricted 3
Adjacent to:	Near Judicial Assistant
Ceiling Height:	10’-0”

Finishes:

Wall:	PNT-1
Floor:	CPT, VCT
Base:	V/RB
Ceiling:	ACP

Building Systems:

Illumination:

Horizontal:	30-50 fc
Vertical:	10-15 fc
Lighting Control:	Yes

Space Notes:

1. Storage, copier, fax, files, and service unit may be combined into a single space.

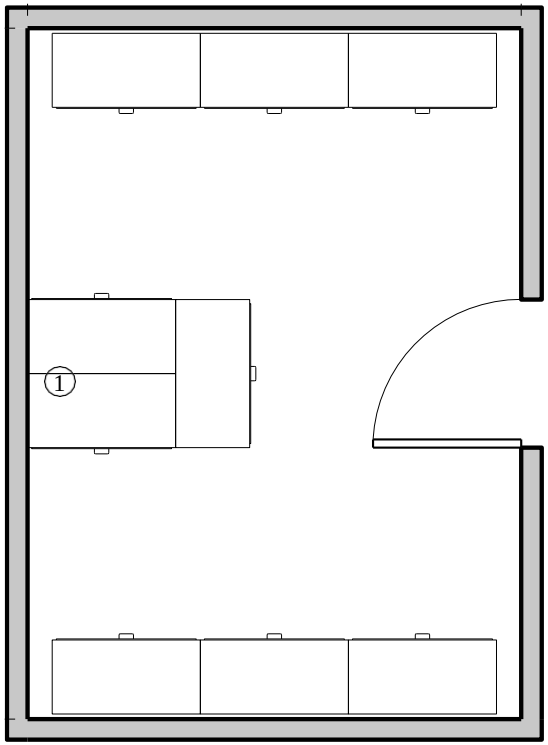

Legend:

1 File Cabinets

Associated Chamber Space

Space and Ceiling Requirements

Reception Area 100 NSF (9.3 Nm²)

Architectural:

General Requirements:

Security Level:	Restricted 1, 2
Adjacent to:	Restricted Circulation
Ceiling Height:	10'-0"

Finishes:

Wall:	~~WD,~~ PNT-1, ~~FWC~~
Floor:	CPT, ~~WD~~
Base:	V/RB, ~~WD~~
Ceiling:	ACP, PNT-1

Building Systems:

Illumination:

Horizontal:	20-30 fc
Vertical:	5-10 fc
Lighting Control:	Yes
Emergency Lighting:	Yes

Security:

- CCV camera (outside of entry to reception)
- Security intercom (outside of entry to reception)
- Card reader

Space Notes:

1. Judicial assistant work space shown within reception area.
2. Flooring for light commercial traffic.

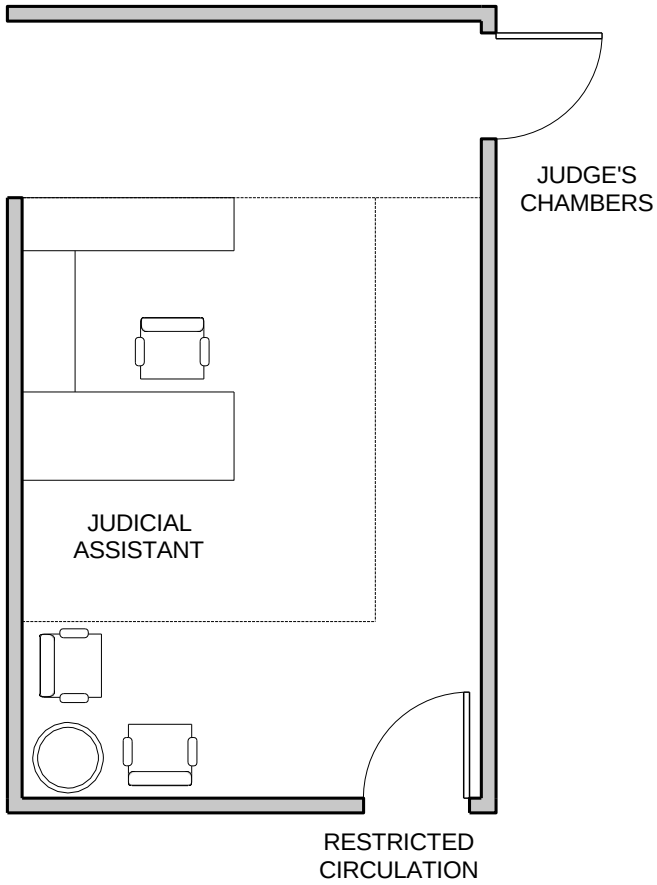

Associated Chamber Space
Space and Ceiling Requirements

Judicial Assistant Work Space 120 NSF (11.2 Nm²)

Architectural:

General Requirements:

Security Level:	Restricted 1
Adjacent to:	Reception
Ceiling Height:	10'-0"

Finishes:

Wall:	PNT-1
Floor:	CPT, ~~WD~~
Base:	V/RB, ~~WD~~
Ceiling:	ACP

Building Systems:

Illumination:

Horizontal:	30-50 fc
Vertical:	10-15 fc
Lighting Control:	Yes
Emergency Lighting:	Yes

Security:

- CCV monitor
- Duress alarm
- Security intercom
- Door Contact
- Remote Door - Release Mechanical

Space Notes:

1. Reception area is included in NSF for non-resident chambers suites.
2. Flooring for light commercial traffic.

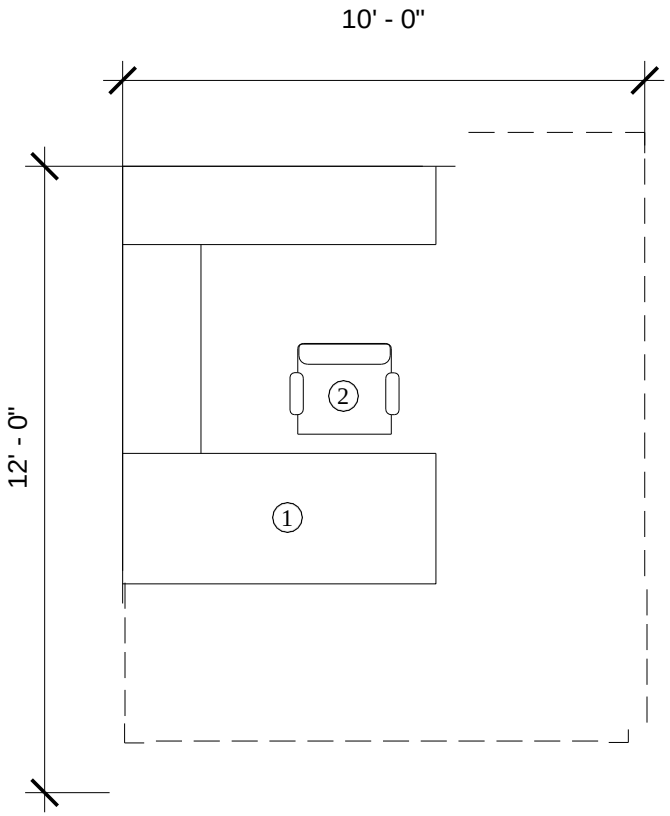

Legend:

1 Systems Furniture

2 Chair

LESSOR:_____GOVERNMENT:_____

Associated District & Bankruptcy Clerks' Office Spaces

Space and Ceiling Requirements

Public Counter & Clerk Workstation,

Small Courthouse	**100 NSF (9.3 Nm²)**
Medium Courthouse	**150 NSF (14 Nm²)**
Large Courthouse	**250 NSF (18.6 Nm²)**

Architectural:

General Requirements:

Security Level:	Public 3, Restricted 4
Adjacent to:	Public Queuing & Clerks Offices
Ceiling Height:	12'-0"

Finishes:

Wall:	PNT-1
Floor:	CPT, ~~TZ, ST~~LVT, VCT
Base:	V/RB, ~~TZ, ST~~
Ceiling:	ACP, ~~GWB~~

Building Systems:

Security:
- Key Locks
-Duress alarm

Space Notes:

1. Small courthouse = five courtrooms or fewer. Provide 10 LF of counter space.
   Medium courthouse = 6-12 courtrooms. Provide 15 LF of counter space.
   Large courthouse = 13 or more courtrooms. Requires 25 LF of counter space.
2. Counter space @ 10'-0" depth.
3. Area includes cashier station

CLERK'S OFFICE

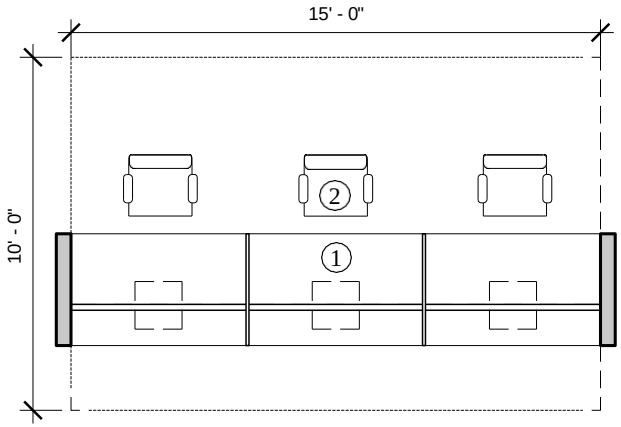

PUBLIC QUEUING AREA

Legend:

1. Workstation Countertop
2. Chair

LESSOR:_____GOVERNMENT:_____

Associated District & Bankruptcy Clerks' Office Spaces

Space and Ceiling Requirements

Public Pay Copier & Scanning Workstation

Small Courthouse	**128 NSF (11.8 Nm²) + Open Area**
Medium Courthouse	**192 NSF (17.7 Nm²) + Open Area**
Large/Extra-Large Courthouse	**320 NSF (29.5 Nm²) + Open Area**
Open Area	**110 NSF (10.3 Nm²)**

Architectural:

General Requirements:

Security Level:	Public 2
Adjacent to:	Public Queuing
Ceiling Height:	10'-0"

Finishes:

Wall:	PNT-1
Floor:	VCT
Base:	V/RB
Ceiling:	ACP

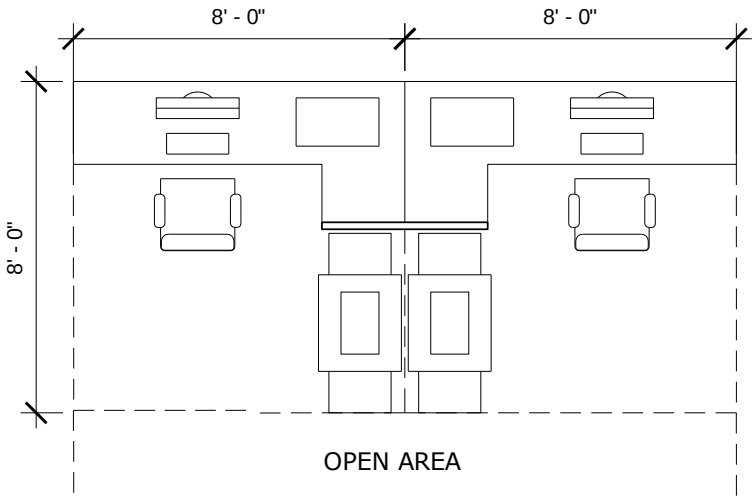

Space Notes:

1. Small courthouse = five courtrooms or fewer. Provide two open workstations
   Medium courthouse = 6-12 courtrooms. Provide three open workstations
   Large/extra-large courthouse = 13 or more courtrooms. Provide five open workstations
   Each workstation = 64 NSF (51.1Nm2)

Associated District & Bankruptcy Clerks' Office Spaces

Space and Ceiling Requirements

Records Exam Area

Small Courthouse	**100 NSF (9.3 Nm²)**
Medium Courthouse	**150 NSF (14 Nm²)**
Large/Extra-Large Courthouse	**180 NSF (16.7 Nm²)**

Architectural:

General Requirements:

Security Level:	Public 2, Restricted 4
Adjacent to:	Public Queuing
Ceiling Height:	10'-0"

Finishes:

Wall:	PNT-1
Floor:	CPT
Base:	V/RB
Ceiling:	ACP

Space Notes:

1. Area includes computer access station.
2. In some courthouses ballistic-resistant transaction windows may be required to separate public and staff areas.

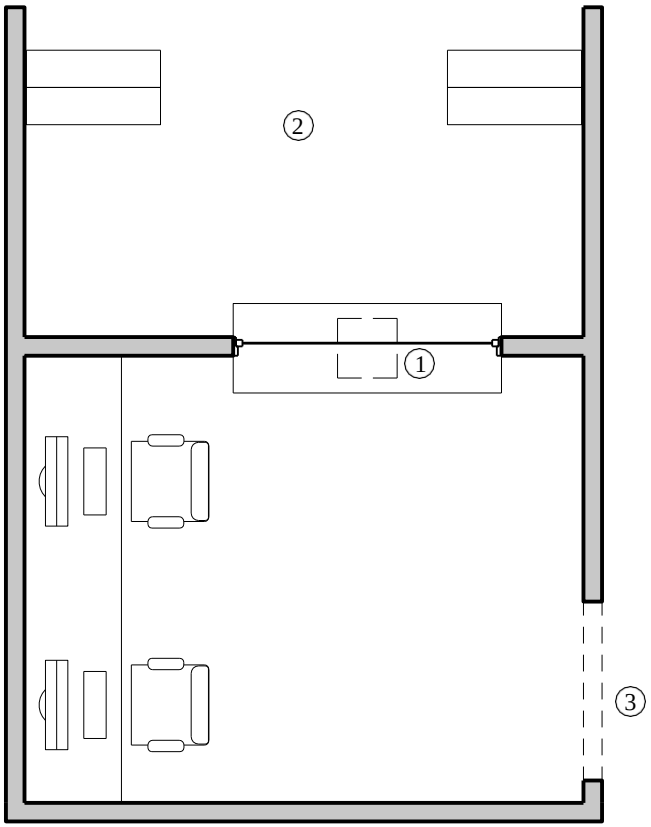

Legend:

1. Public Transaction Counter
2. Active Records Area (number varies per Jurisdiction)
3. Public Queuing

LESSOR:_____GOVERNMENT:_____

Associated District & Bankruptcy Clerks' Office Spaces

Space and Ceiling Requirements

Queuing Area

Small Courthouse	**100 NSF (9.3 Nm²)**
Medium Courthouse	**150 NSF (14 Nm²)**
Large/Extra-Large Courthouse	**180 NSF (16.7 Nm²)**

Architectural:

General Requirements:

Security Level:	Public 3, Restricted 4
Adjacent to:	Counters, Record Exam
Ceiling Height:	10'-0"

Finishes:

Wall:	PNT-1
Floor:	CPT, ~~TZ, ST~~LVT, VCT
Base:	V/RB, ~~TZ, ST~~
Ceiling:	ACP, ~~GWB~~

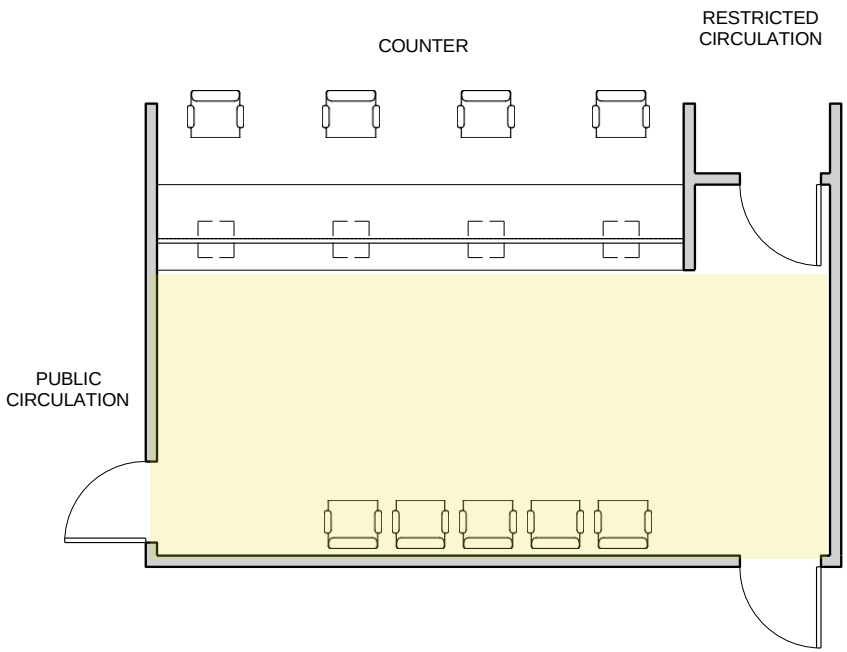

LESSOR:_____GOVERNMENT:_____

Associated Clerks' Office Spaces
Space and Ceiling Requirements

FAC ID Room

~~120 NSF (11.2 Nm²)~~ **64 NSF**

Architectural:

General Requirements:

Security Level:	Restricted 3
Adjacent to:	Restricted Circulation
Ceiling Height:	10'-0"

Finishes:

Wall:	PNT-1
Floor:	CPT
Base:	V/RB
Ceiling:	ACP

Building Systems:

Security:
- Duress alarm

Fixtures, Furniture, and Equipment (FFE)

- (1) Secure storage for ID media.
- (TBD) Badging station.

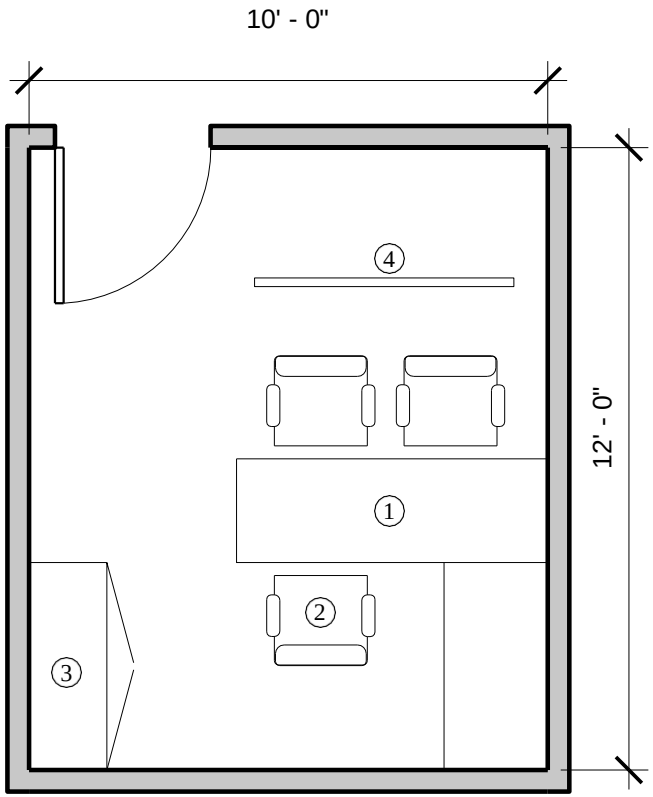

Legend:

1 Workstation
2 Chair
3 Secure Storage
4 Retractable Screen

Associated Clerks' Office Spaces

Space and Ceiling Requirements

Computer Training Room

Small/Medium Courthouse	**200 NSF (18.6 Nm²)**
Large Courthouse	**300 NSF (27 Nm²)**

Architectural:

General Requirements:

Security Level:	Restricted 3
Adjacent to:	Restricted Corridor
Ceiling Height:	12'-0"

Finishes:

Wall:	PNT-1
Floor:	VCT, CPT
Base:	V/RB, ~~WD~~
Ceiling:	ACP

Space Notes:

1. FFE requirements should be determined on a project-to-project basis to satisfy the local needs. FFE shown on the graphic is notional.

Associated Clerks' Office Spaces
Space and Ceiling Requirements

Computer Training Room

Small/Medium Courthouse	**200 NSF (18.6 Nm²)**
Large Courthouse	**300 NSF (27 Nm²)**

Legend:

1. Visual Display Board
2. Shared Printers
3. Projection Screen
4. Instructor Workstation
5. Secure Storage
6. Ceiling Mounted Projector

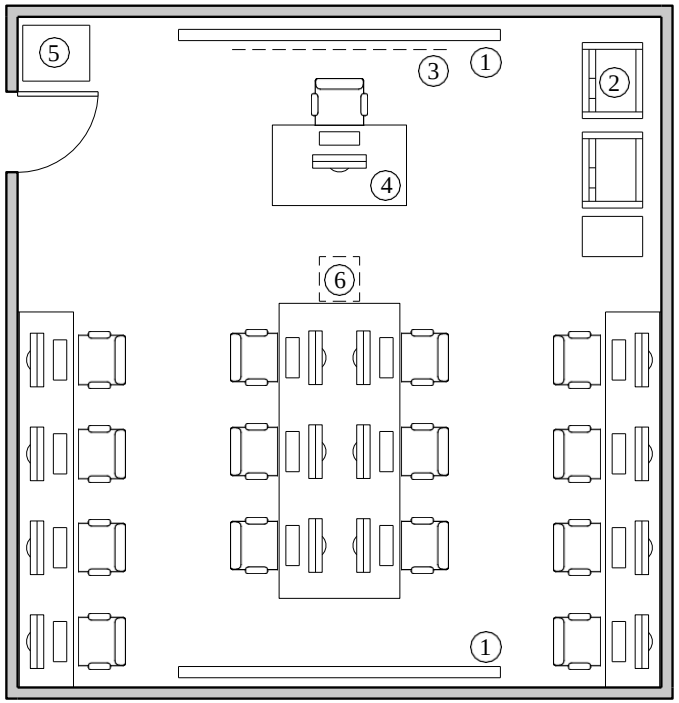

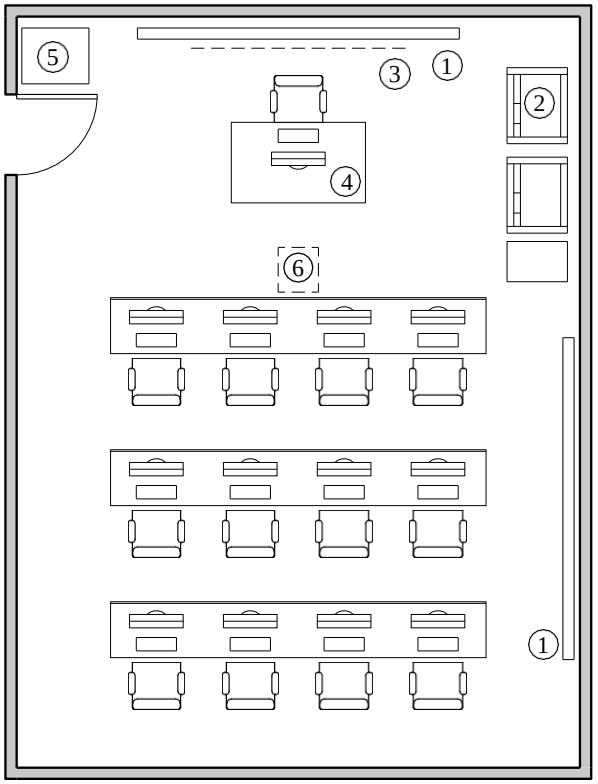

LESSOR:_____GOVERNMENT:_____

Associated Other Court Unit Office Spaces

Space and Ceiling Requirements

Records, Copier, Work Room & Storage — 350 NSF (32.6 Nm²)

Architectural:

General Requirements:

Security Level:	Restricted 3
Adjacent to:	Restricted Corridor
Ceiling Height:	10’-0”

Finishes:

Wall:	PNT-1
Floor:	VCT, CPT
Base:	V/RB
Ceiling:	ACP

Space Notes:

1. Provide record storage areas of 150 psf live load. Confer with clerk staff prior to the design of this area.

Associated Other Court Unit Spaces

Space and Ceiling Requirements

Mail Work Area

~~100 NSF (9.3 Nm²)~~ **40 NSF**

Architectural:

General Requirements:

Security Level:	Restricted 1
Adjacent to:	Restricted Corridor
Ceiling Height:	10'-0"

Finishes:

Wall:	PNT-1
Floor:	VCT, CPT
Base:	V/RB
Ceiling:	ACP

Building Systems:

Security:

- Duress alarm

Space Notes:

1. Area includes a copier.

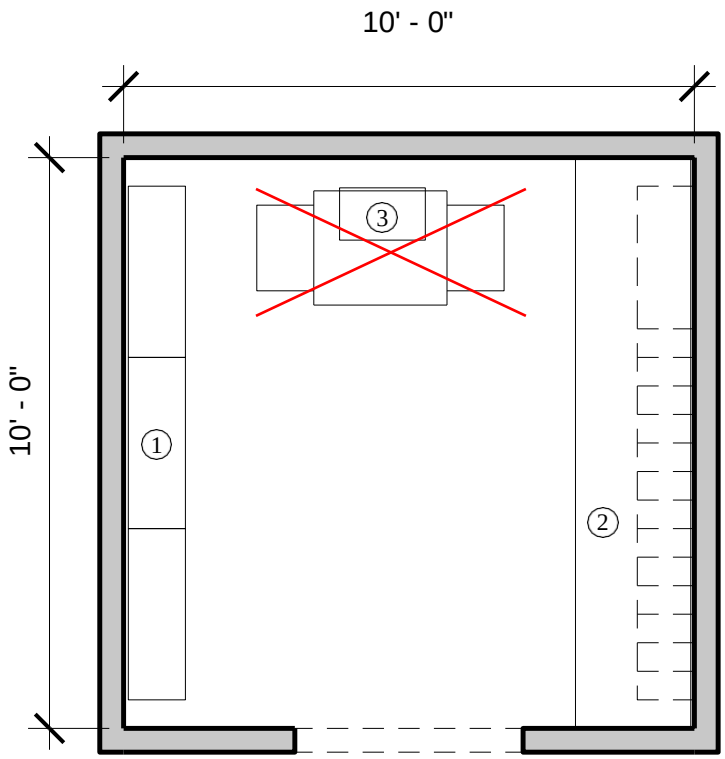

Legend:

1 Shelves

2 Counter

~~3 Copier~~

LESSOR:_____GOVERNMENT:_____