United States Department of Agriculture
Forest Service

NEW MEXICO
RIO ARRIBA COUNTY
R03 SOUTHWESTERN REGION
CARSON NATIONAL FOREST
TRES PIEDRAS RANGER DISTRICT

WATER SYSTEM IMPROVEMENTS

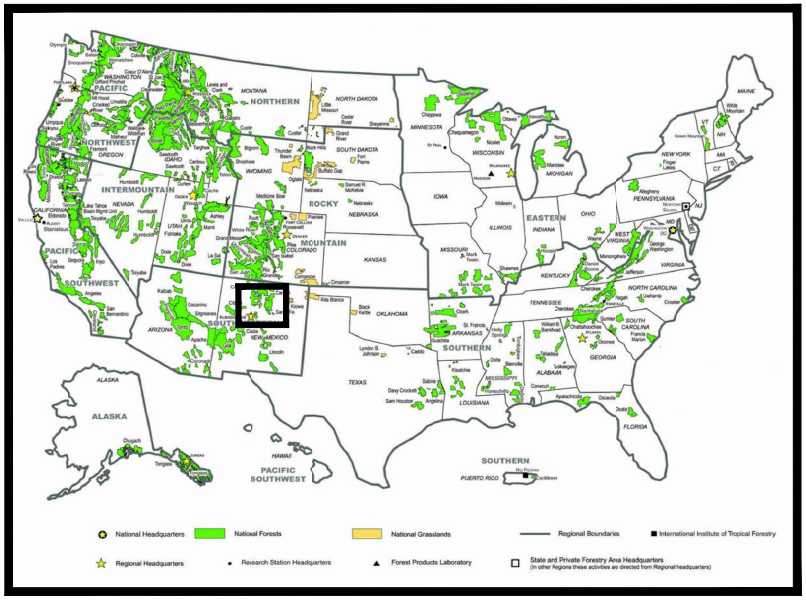

FOREST LOCATION MAP

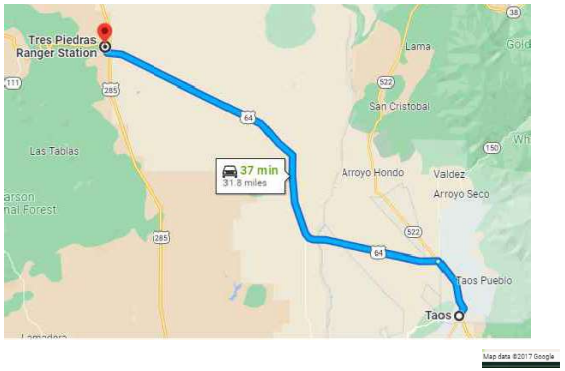

PROJECT LOCATION MAP

TRAVEL DIRECTIONS:

FROM THE CARSON NATIONAL FOREST SUPERVISORS OFFICE: DRIVE WEST ON CRUZ ALTA RD. TO STATE ROAD 68. PROCEED NORTH ALONG HWY 68 (MERGES WITH HWY 64). REMAIN ON HWY 64 AND PROCEED TO TRES PIEDRAS NM. CONTINUE WEST ALONG HWY 64 FOR APPROXIMATELY 0.7 MILES. THE TRES PIEDRAS RANGER DISTRICT OFFICE WILL BE ON THE NORTH SIDE OF THE ROAD.

INDEX OF SHEETS

SHEET	SHEET TITLE	DATE
G-01	COVERSHEET	04/07/25
G-02	GENERAL NOTES	04/07/25
LS-01	VICINITY MAP	04/07/25
CU-01	BID OPTIONS A & B: PLAN VIEW	04/07/25
CU-02	WELLHEAD SITE: BID OPTION A	04/07/25
CU-03	BID OPTION B: STA. 3+50 - STA. 9+00	04/07/25
CU-04	BID OPTION B: STA. 64+50 - STA. 64+79	04/07/25
CU-05	BASE BID: DISTRICT COMPOUND	04/07/25
CU-06	BASE BID: DISTRICT COMPOUND	04/07/25
CU-07	BASE BID: DISTRICT COMPOUND	04/07/25
CU-08	BASE BID: DISTRICT COMPOUND	04/07/25
CU-09	BASE BID: DISTRICT COMPOUND	04/07/25
CU-10	BASE BID: DISTRICT COMPOUND	04/07/25
CU-11	BASE BID: DISTRICT COMPOUND	04/07/25
S-01	UTILITY BUILDING FOUNDATION PLAN	04/07/25
S-02	UTILITY BUILDING FRAMING PLAN	04/07/25
S-03	UTILITY BUILDING ROOF FRAMING PLAN	04/07/25
A-01	UTILITY BUILDING FINISH SCHEDULE	04/07/25
P-01	UTILITY BUILDING PLUMBING PLAN	04/07/25
C5-01	UTILITY DETAILS	04/07/25
C5-02	UTILITY DETAILS	04/07/25
C5-03	UTILITY DETAILS	04/07/25

RECOMMENDED BY:

LISA ARCHULETA — Digitally signed by LISA ARCHULETA Date: 2025.07.29 13:51:42 -06'00'

FOREST ENGINEER — Leslie Hay — Digitally signed by Leslie Hay Date: 2025.07.30 16:34:05 -06'00'

DISTRICT RANGER — JAMES DURAN — Digitally signed by JAMES DURAN Date: 2025.07.31 08:10:08 -06'00' — DATE

FOREST SUPERVISOR — TRACY WEBER — Digitally signed by TRACY WEBER Date: 2025.08.01 12:19:53 -06'00' — DATE

RO FACILITIES PROGRAM MANAGER — DATE

APPROVED:

DANNY MONTOYA — Digitally signed by DANNY MONTOYA Date: 2025.08.01 14:40:57 -06'00'

DIRECTOR OF ENGINEERING — DATE

5/6/26 16:24 AARONTRUJILLO C:\USERS\AARONTRUJILLO\DOWNLOADS\ENGINEERING\GT1\ENGINEERING\GNCM\TIP\PROGRAM OF WORK\FY-26\CARSON - TRES PIEDRAS WATERLINE REPLACEMENT\DWG\TP WATERLINE IMPROVEMENTS.DWG;

GENERAL NOTES

SPECIFICATIONS: CONSTRUCTION OF FACILITIES MUST COMPLY WITH ALL APPLICABLE BUILDING CODES. NEW INSTALLATION MUST COMPLY WITH ARCHITECTURAL BARRIERS ACT ACCESSIBILITY STANDARDS (ABAAS) AND FOREST SERVICE OUTDOOR RECREATION ACCESSIBILITY GUIDELINES (FSORAG) IF DENOTED IN THE DRAWINGS.

DESIGN: THE CONTRACT HAS BEEN DESIGNED IN ACCORDANCE WITH ALL UTILITY SPECIFICATIONS INCLUDED IN THE CONTRACT PACKAGE.

GEOTECHNICAL ANALYSIS: CONTRACTOR SHALL PERFORM ALL NECESSARY GEOTECHNICAL TESTING ON NATIVE SOILS TO ENSURE COMPLIANCE WITH TRENCHING & BACKFILL SPECIFICATIONS. ALL EXCAVATION, BACKFILL & COMPACTION SHALL BE IN ACCORDANCE WITH **SECTION 02540 EXCAVATION, BACKFILL & COMPACTION FOR UTILITIES**. OVEREXCAVATE ALL CLAY THAT MAY BE ENCOUNTERED AND REPLACE WITH BACKFILL MATERIAL (THIS CONDITION IS NOT EXPECTED IN THIS PROJECT).

UTILITIES: CONTRACTOR SHALL ORDER LOCATES FOR ANY/ALL EXISTING UTILITIES SHOWN IN THE DRAWINGS PRIOR TO THE START OF CONSTRUCTION. BELOW IS A LIST OF UTILITY OWNERS.

1. ELECTRIC: KIT CARSON ELECTRIC COOPERATIVE: (575) 758-2258
2. GAS: NEW MEXICO GAS COMPANY: (575) 758-5873
3. INTERNET: TBD
4. WATERLINE: CARSON NATIONAL FOREST: (575) 758-6200; TRES PIEDRAS DOMESTIC WATER ASSOCIATION: (575) 737-0333

HOURS OF OPERATION: NO FEDERAL HOLIDAYS OR WEEKENDS UNLESS APPROVED BY THE CO.

NOXIOUS WEED CONTROL: ALL CONSTRUCTION EQUIPMENT SHALL BE CLEANED AND POWERWASHED AND FREE OF DIRT & DEBRIS PRIOR TO ENTRY OF NATIONAL FOREST LANDS/PROPERTY. SUBJECT TO INSPECTION BY COR PRIOR TO MOBILIZATION.

ARCHEOLOGICAL SITES: SHOULD ARCHEOLOGICAL OR PALENTOLOGICAL REMAINS OR SPECIMENS BE DISCOVERED, SUSPEND OPERATIONS AT THE DISCOVERY SITE, MOVE TO ANOTHER AREA OF THE PROJECT IF PRACTICAL, AND NOTIFY THE CO. NO ARCHEOLOGICAL SITES ARE ANTICIPATED WITHIN THE PROJECT AREA.

CLEARING LIMITS: CLEARING LIMITS SHALL EXTEND 10' BEYOND UTILITY TRENCHES AND 20' BEYOND BUILDING PERIMETER AS APPROVED BY COR.

SALVAGE: ALL EXISTING MATERIAL SHALL BECOME THE PROPERTY OF THE CONTRACTOR AND SHALL BE REMOVED FROM THE NATIONAL FOREST LAND IN ACCORDANCE WITH ALL FEDERAL, STATE, AND LOCAL LAWS.

EXCAVATION: THE CONTRACTOR MAY USE EXCESS EXCAVATION IF THE MATERIAL MEETS THE REQUIREMENTS OF THE APPLICABLE STANDARD AND SUPPLEMENTAL SPECIFICATIONS. ANY EXCESS AND UNSUITABLE EXCAVATION SHALL BE REMOVED FROM THE NATIONAL FOREST LAND IN ACCORDANCE WITH ALL FEDERAL, STATE, AND LOCAL LAWS. REFERENCE **SECTION 02540 EXCAVATION, BACKFILL & COMPACTION FOR UTILITIES**.

TOPSOIL: PRIOR TO EXCAVATION OR EMBANKMENT, TOPSOIL SHALL BE STRIPPED FROM THOSE AREAS TO A MINIMUM DEPTH OF 4" AND STOCKPILED AS DIRECTED. FINISHED SLOPES SHALL RECEIVE 2 - 3" OF TOPSOIL TO THE EXTENT ALLOWED BY EVEN DISTRIBUTION OF THE STOCKPILE. CONFIRM THIS CONDITION WITH COR.

STAGING AREAS: STAGING SHALL BE PERMITTED.AT THE WELLHEAD SITE UNLESS OTHERWISE APPROVED BY COR

SYMBOL & LINE LEGEND

—w—w—	PROPOSED WATERLINE
— — w — —	EXISTING COMMUNITY WATERLINE
— —w— — —w— —	EXISTING 2" USFS WATERLINE
— — G — —	EXISTING GAS LINE
— E —	EXISTING OVERHEAD ELECTRIC LINE
— — X — —	EXISTING FENCE LINE
— — S — —	EXISTING SEWER LINE
	EXISTING VEGETATION
	WATER HYDRANT; REFERENCE CALLOUT FOR NEW VS OLD, YARD VS FIRE
	EXISTING CONCRETE
	EXISTING UTILITY/POWER POLE
	AIR VALVE

USDA FOREST SERVICE

United States Department of Agriculture
Forest Service

R03
SOUTHWESTERN REGION

STAMPS, LOGOS, AND SEALS

LICENSE OF MISTER ARON TRUJILLO
NEW MEXICO
30919
PROFESSIONAL ENGINEER
8/19/25

NO.	REVISION / ISSUE	DATE
4		
3		
2		
1		

PROJECT NAME

WATER SYSTEM IMPROVEMENTS

CARSON NATIONAL FOREST

TRES PIEDRAS RANGER DISTRICT

DRAWING TITLE

GENERAL NOTES

DATE 04/07/2025	ARCHIVE NO.
DESIGNER A.TRU	DRAWING SHEET NO. G-02
DRAWN A.TRU	
CHECKED X.XXX	
PROJECT NO.	SHEET 02 OF 22

5/8/26 16:24 AARONTRUJILLO C:\USERS\AARONTRUJILLO\DROPBOX\17100\ENGINEERING\17100 ENGINEERING\MGMT\PROGRAM OF WORK\FY-26\CARSON - TRES PIEDRAS WATERLINE REPLACEMENT\DWG\TP WATERLINE IMPROVEMENTS.DWG

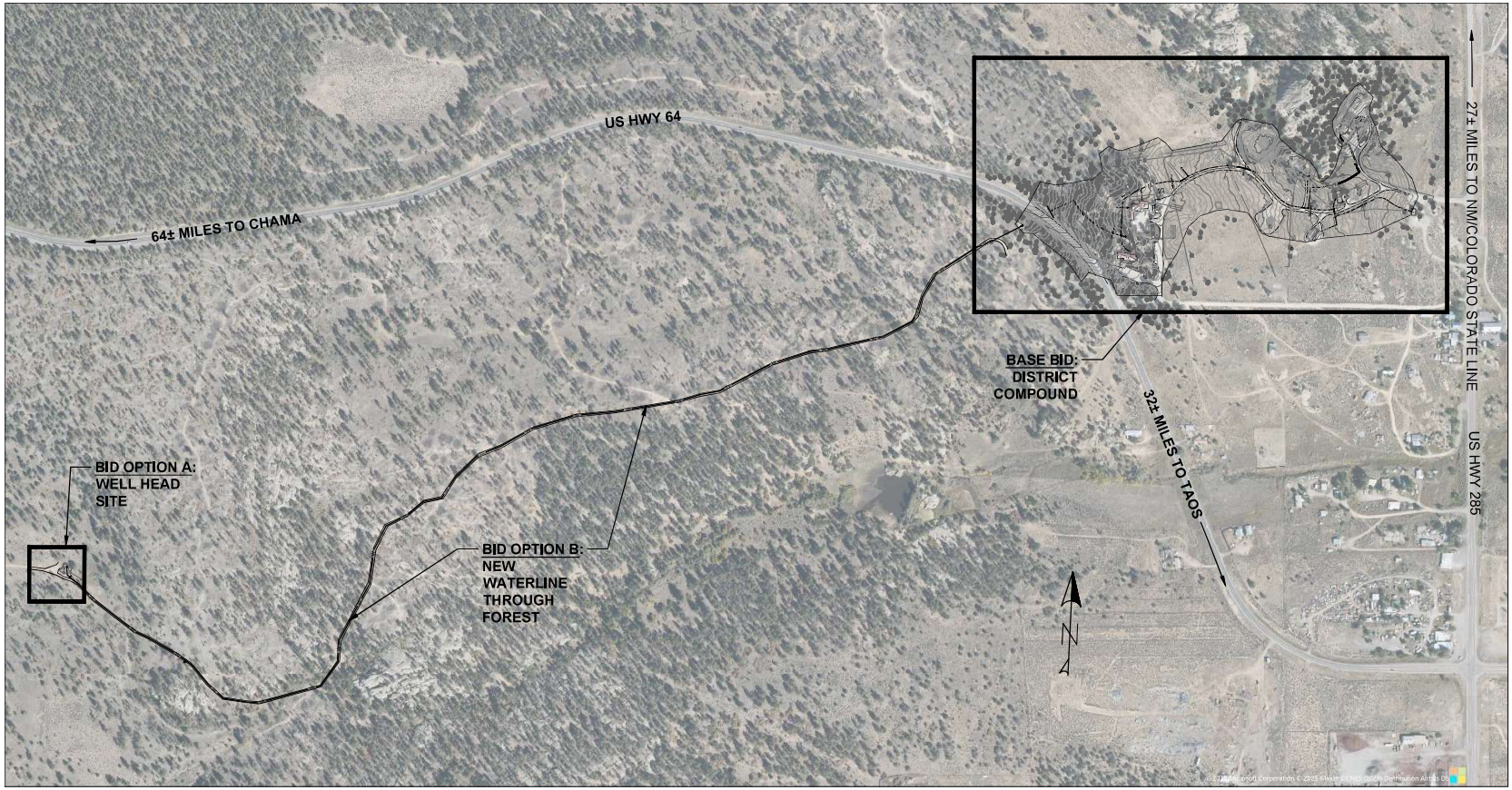

SHEET GENERAL NOTES:

1. CONTRACTOR MAY ESTABLISH A STAGING AREA AT THE WELL HEAD. COORDINATE WITH COR IF STAGING WITHIN DISTRICT COMPOUND
2. ALIGNMENT OF NEW WATERLINE TO FOLLOW THE EXISTING ADMINISTRATIVE ROAD. COORDINATE WITH COR FOR ACCESS POINTS.
3. A COMPONENT OF BID OPTION A IS LOCATED WITHIN THE FOOTPRINT OF THE BASE BID. THIS IS NOTED ON SHEET CU-05, KEYED NOTE 2.

United States Department of Agriculture
Forest Service

R03
SOUTHWESTERN REGION

STAMPS, LOGOS, AND SEALS

NO.	REVISION / ISSUE	DATE
4		
3		
2		
1		

PROJECT NAME

WATER SYSTEM IMPROVEMENTS

CARSON NATIONAL FOREST

TRES PIEDRAS RANGER DISTRICT

DRAWING TITLE

VICINITY MAP

DATE 04/07/2025	ARCHIVE NO.
DESIGNER A.TRU	DRAWING SHEET NO. LS-01
DRAWN A.TRU	
CHECKED X.XXX	
PROJECT NO.	SHEET 03 OF 22

5/8/26 16:24 AARONTRU,LLO C:\USERS\AARONTRU,LLO\DROPBOX\17100\ENGINEERING\17116\ENGINEERING\17116\ENVIRONMENTAL\PROGRAM OF WORK\FY-26\CARSON - TRES PIEDRAS WATERLINE REPLACEMENT\DWG\TP WATERLINE IMPROVEMENTS.DWG

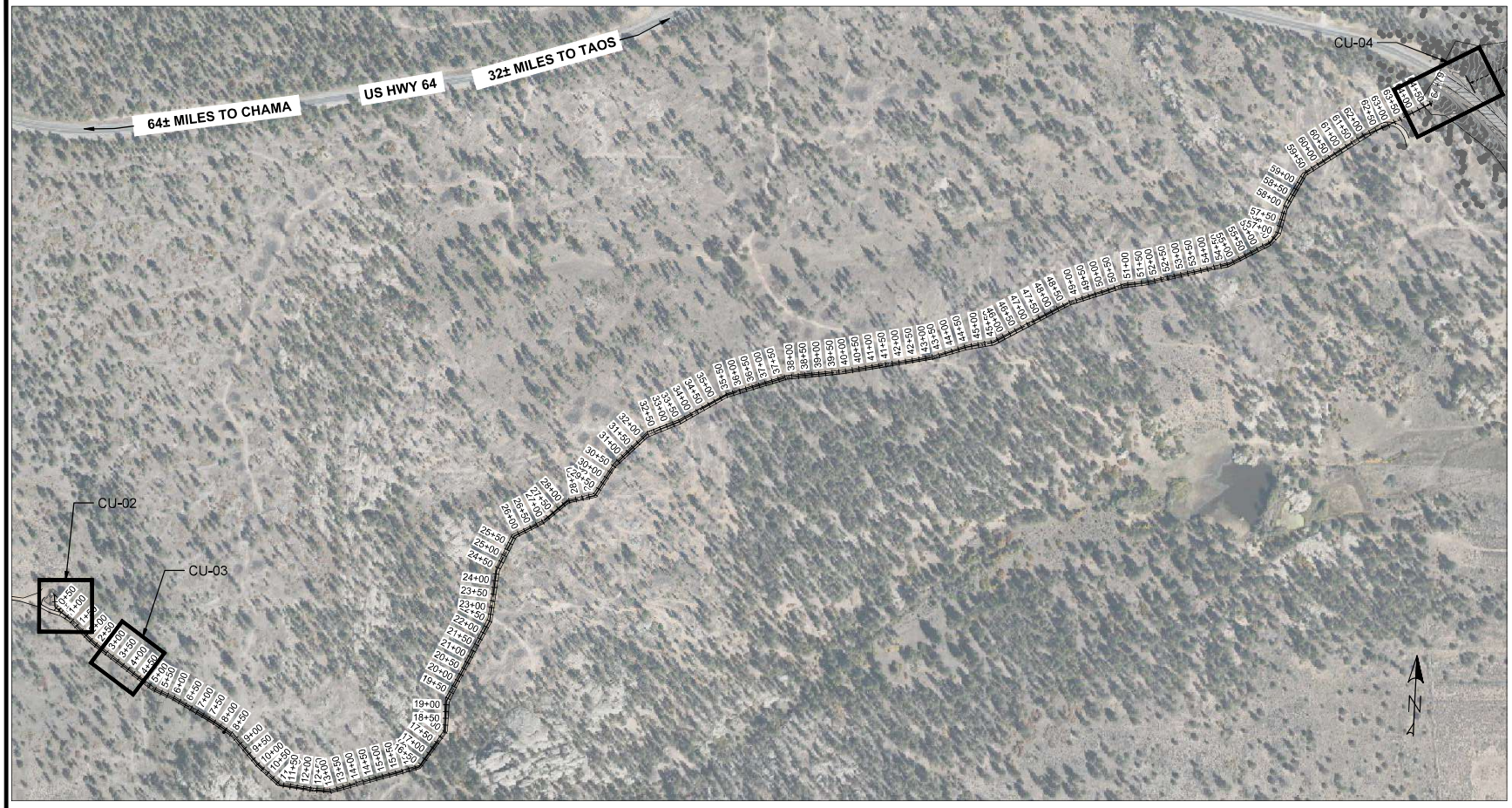

SHEET GENERAL NOTES:

1. ± 6,479 (LF) OF NEW 2" HDPE WATERLINE TO BE INSTALLED ALONG APPROXIMATE CENTERLINE OF EXISTING ADMIN RD FROM WELL HEAD TO US HWY 64 CROSSING. AREA WILL BE LOCATED AFTER STAGING
2. WATERLINE BURY DEPTH = 4'-00" (TYP)
3. INSTALL TRACER WIRE ALONG ENTIRE LENGTH OF NEW LINE
4. SHEETS CU-01 - CU-04 ARE FOR BID OPTIONS A & B; SEE SHEETS CU-05 - CU-11 FOR BASE BID: NEW WATERLINE THROUGH DISTRICT COMPOUND
5. A COMPONENT OF BID OPTION A IS LOCATED WITHIN THE FOOTPRINT OF THE BASE BID. THIS IS NOTED ON SHEET CU-05, KEYED NOTE 2.

USDA FOREST SERVICE

United States Department of Agriculture
Forest Service

R03
SOUTHWESTERN REGION

STAMPS, LOGOS, AND SEALS

NO.	REVISION / ISSUE	DATE
1		
2		
3		
4		

PROJECT NAME

WATER SYSTEM IMPROVEMENTS

CARSON NATIONAL FOREST

TRES PIEDRAS RANGER DISTRICT

DRAWING TITLE

BID OPTIONS A & B: PLAN VIEW

DATE 04/07/2025	ARCHIVE NO.
DESIGNER A.TRU	DRAWING SHEET NO. CU-01
DRAWN A.TRU	
CHECKED X.XXX	
PROJECT NO.	SHEET 04 OF 22

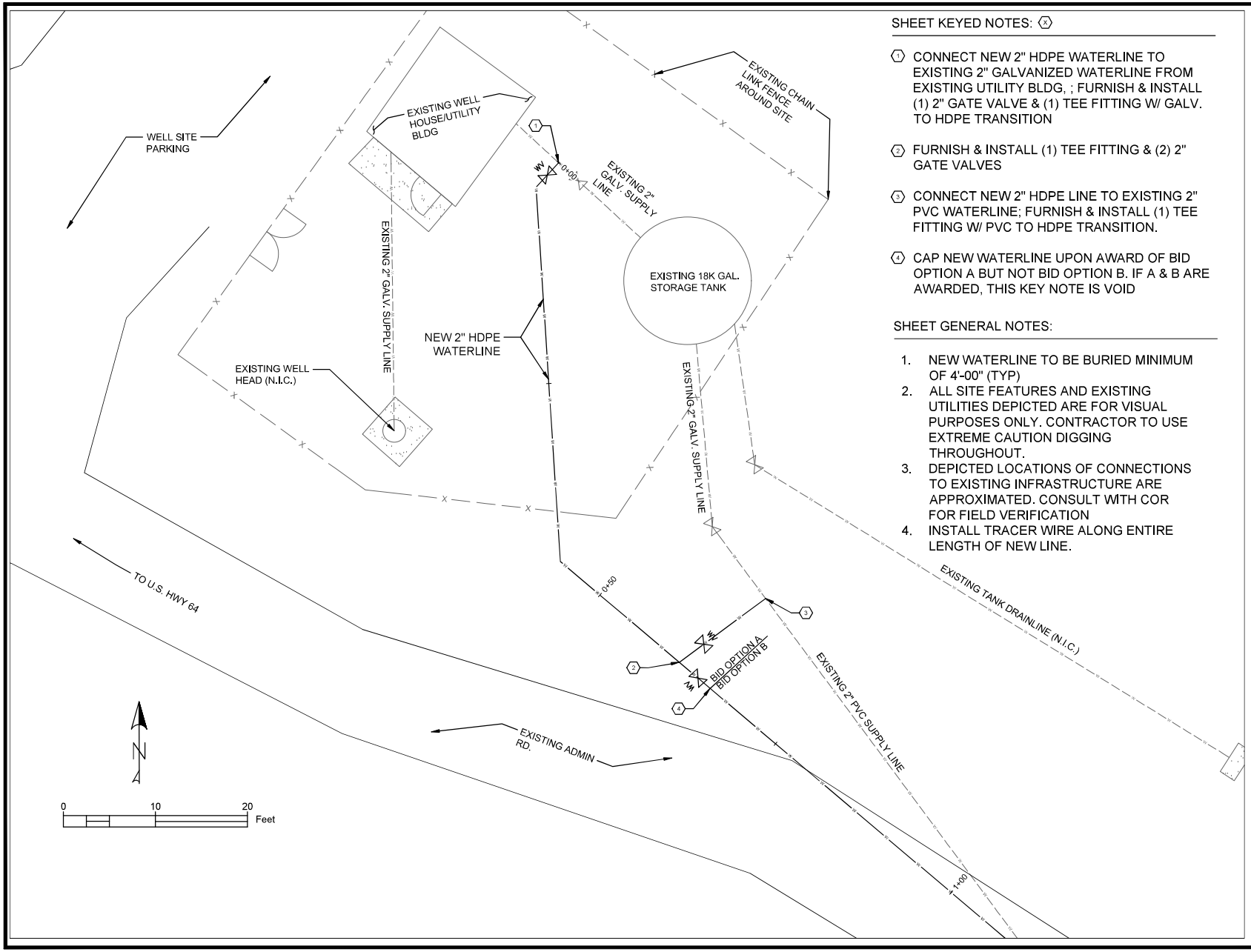

SHEET KEYED NOTES: (X)

(1) CONNECT NEW 2" HDPE WATERLINE TO EXISTING 2" GALVANIZED WATERLINE FROM EXISTING UTILITY BLDG, ; FURNISH & INSTALL (1) 2" GATE VALVE & (1) TEE FITTING W/ GALV. TO HDPE TRANSITION

(2) FURNISH & INSTALL (1) TEE FITTING & (2) 2" GATE VALVES

(3) CONNECT NEW 2" HDPE LINE TO EXISTING 2" PVC WATERLINE; FURNISH & INSTALL (1) TEE FITTING W/ PVC TO HDPE TRANSITION.

(4) CAP NEW WATERLINE UPON AWARD OF BID OPTION A BUT NOT BID OPTION B. IF A & B ARE AWARDED, THIS KEY NOTE IS VOID

SHEET GENERAL NOTES:

1. NEW WATERLINE TO BE BURIED MINIMUM OF 4'-00" (TYP)
2. ALL SITE FEATURES AND EXISTING UTILITIES DEPICTED ARE FOR VISUAL PURPOSES ONLY. CONTRACTOR TO USE EXTREME CAUTION DIGGING THROUGHOUT.
3. DEPICTED LOCATIONS OF CONNECTIONS TO EXISTING INFRASTRUCTURE ARE APPROXIMATED. CONSULT WITH COR FOR FIELD VERIFICATION
4. INSTALL TRACER WIRE ALONG ENTIRE LENGTH OF NEW LINE.

United States Department of Agriculture
Forest Service

R03
SOUTHWESTERN REGION

STAMPS, LOGOS, AND SEALS

LICENSE OF MISTER ARCHITECT
NEW MEXICO
36919
PROFESSIONAL ENGINEER
4/19/25

NO.	REVISION / ISSUE	DATE
4		
3		
2		
1		

PROJECT NAME

WATER SYSTEM IMPROVEMENTS

CARSON NATIONAL FOREST

TRES PIEDRAS RANGER DISTRICT

DRAWING TITLE

WELLHEAD SITE: BID OPTION A

DATE 04/07/2025	ARCHIVE NO.
DESIGNER A.TRU	DRAWING SHEET NO. CU-02
DRAWN A.TRU	
CHECKED X.XXX	
PROJECT NO.	SHEET 05 OF 22

5/6/26 16:24 AARONTRU LLO C:\USERS\AARONTRU\LLOBOX\07100ENGINEERING\07116ENGINEERING\PROGRAM OF WORK\FY-26\CARSON - TRES PIEDRAS WATERLINE REPLACEMENT\DWG\TP WATERLINE IMPROVEMENTS.DWG

SHEET KEYED NOTES: (X)

(1) TEE OFF MAIN HDPE WATERLINE. FURNISH & INSTALL: ±10 (LF) OF HDPE WATERLINE SOUTH OF MAINLINE. TRANSITION TO 2" SCH.80 PVC, EXTEND UP VERTICALLY 9'-00" FROM TYPICAL BURY DEPTH AND INSTALL (1) 3/4" HOSE BIB TO SERVE AS AIR RELEASE VALVE. ENCLOSE AIR VALVE IN A 4' DIAMETER CMP CULVERT.

(2) DEMOLISH EXISTING AIR VALVE PER SPECIFICATIONS.

SHEET GENERAL NOTES:

1. NEW WATERLINE TO BE BURIED MINIMUM OF 4'-00" (TYP)
2. ALL SITE FEATURES AND EXISTING UTILITIES DEPICTED ARE FOR VISUAL PURPOSES ONLY. CONTRACTOR TO USE EXTREME CAUTION DIGGING THROUGHOUT COMPOUND
3. DEPICTED LOCATIONS OF CONNECTIONS TO EXISTING BLDG. INFRASTRUCTURE ARE APPROXIMATED. CONSULT WITH COR FOR FIELD VERIFICATION
4. INSTALL TRACER WIRE ALONG ENTIRE LENGTH OF NEW LINE

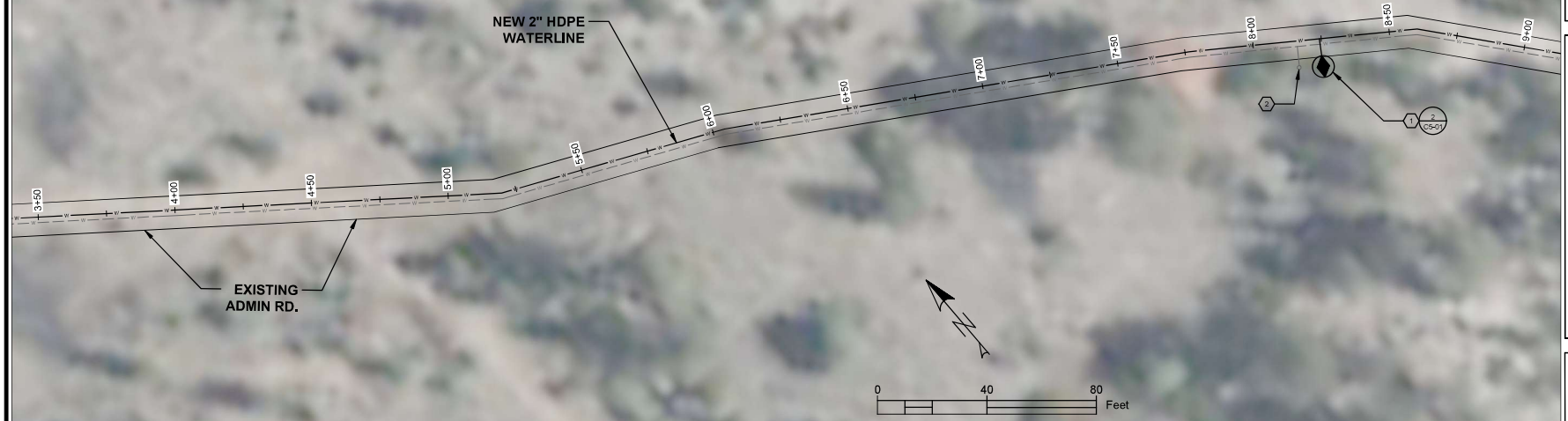

USDA FOREST SERVICE

United States Department of Agriculture
Forest Service

R03
SOUTHWESTERN REGION

STAMPS, LOGOS, AND SEALS

LEANNE GUMSTEAD MYERS
NEW MEXICO
36018
PROFESSIONAL ENGINEER
4/17/25

NO.	REVISION / ISSUE	DATE
4		
3		
2		
1		

PROJECT NAME

WATER SYSTEM IMPROVEMENTS

CARSON NATIONAL FOREST

TRES PIEDRAS RANGER DISTRICT

DRAWING TITLE

BID OPTION B: STATION 3+50 - STATION 9+00

DATE 04/07/2025	ARCHIVE NO.
DESIGNER A.TRU	DRAWING SHEET NO. CU-03
DRAWN A.TRU	
CHECKED X.XXX	
PROJECT NO.	SHEET 06 OF 22

5/6/26 16:24 A.ARONTRU,LLC C:\USERS\AARONTRU,LLC\DROPBOX\17-100\ENGINEERING\17-100 ENGINEERING\CAD\17-100 ENGINEERING\CAD\WORK\PROGRAM OF WORK\FY-26\CARSON - TRES PIEDRAS WATERLINE REPLACEMENT\DWG\TP WATERLINE IMPROVEMENTS.DWG

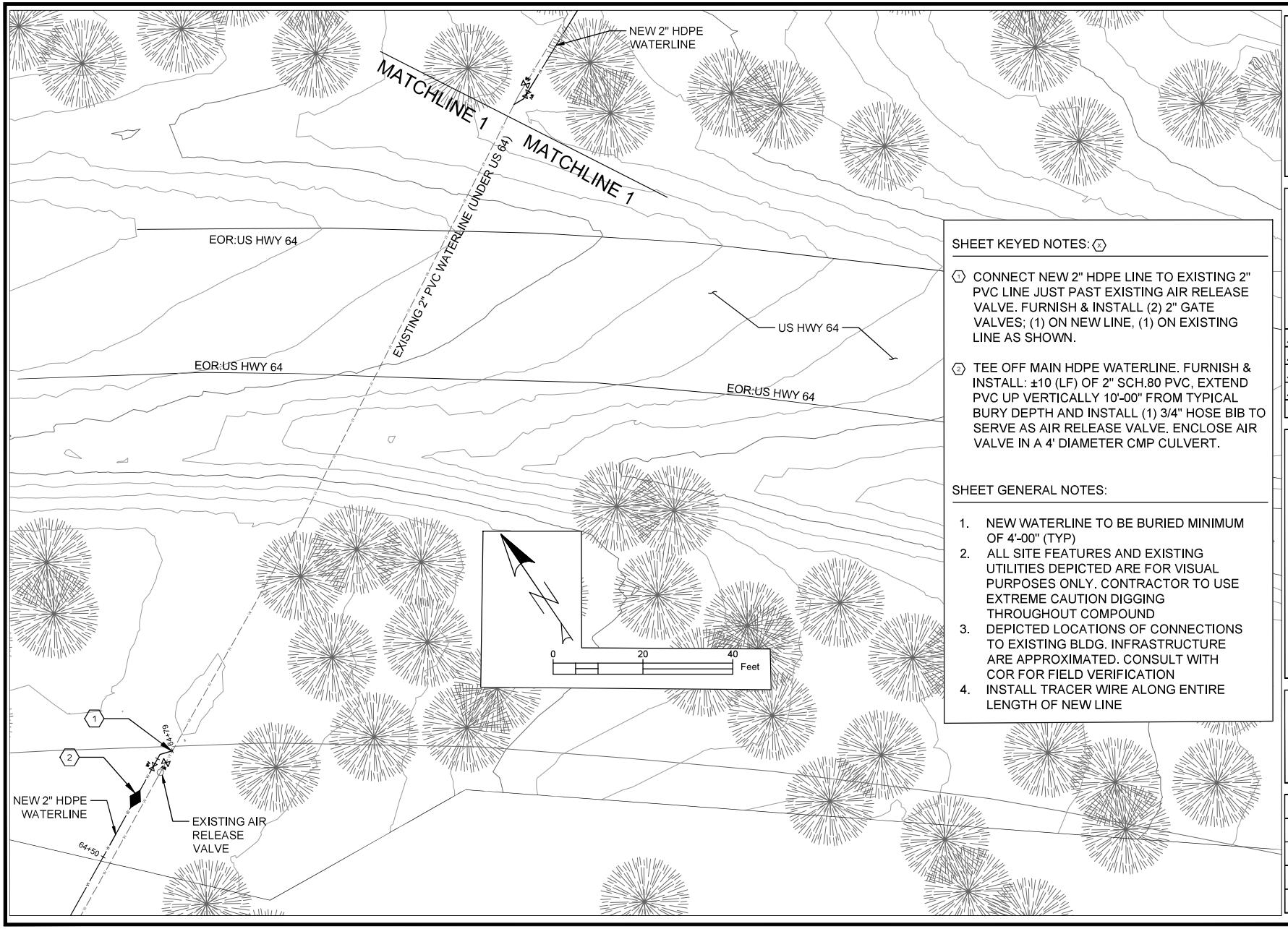

SHEET KEYED NOTES: (X)

(1) CONNECT NEW 2" HDPE LINE TO EXISTING 2" PVC LINE JUST PAST EXISTING AIR RELEASE VALVE. FURNISH & INSTALL (2) 2" GATE VALVES; (1) ON NEW LINE, (1) ON EXISTING LINE AS SHOWN.

(2) TEE OFF MAIN HDPE WATERLINE. FURNISH & INSTALL: ±10 (LF) OF 2" SCH.80 PVC, EXTEND PVC UP VERTICALLY 10'-00" FROM TYPICAL BURY DEPTH AND INSTALL (1) 3/4" HOSE BIB TO SERVE AS AIR RELEASE VALVE. ENCLOSE AIR VALVE IN A 4' DIAMETER CMP CULVERT.

SHEET GENERAL NOTES:

1. NEW WATERLINE TO BE BURIED MINIMUM OF 4'-00" (TYP)
2. ALL SITE FEATURES AND EXISTING UTILITIES DEPICTED ARE FOR VISUAL PURPOSES ONLY. CONTRACTOR TO USE EXTREME CAUTION DIGGING THROUGHOUT COMPOUND
3. DEPICTED LOCATIONS OF CONNECTIONS TO EXISTING BLDG. INFRASTRUCTURE ARE APPROXIMATED. CONSULT WITH COR FOR FIELD VERIFICATION
4. INSTALL TRACER WIRE ALONG ENTIRE LENGTH OF NEW LINE

United States Department of Agriculture
Forest Service

R03
SOUTHWESTERN REGION

STAMPS, LOGOS, AND SEALS

NO.	REVISION / ISSUE	DATE
4		
3		
2		
1		

PROJECT NAME

WATER SYSTEM IMPROVEMENTS

CARSON NATIONAL FOREST

TRES PIEDRAS RANGER DISTRICT

DRAWING TITLE

BID OPTION B: STATION 64+50 - STATION 64+79

DATE 04/07/2025	ARCHIVE NO.
DESIGNER A.TRU	DRAWING SHEET NO. CU-04
DRAWN A.TRU	
CHECKED X.XXX	
PROJECT NO.	SHEET 07 OF 22

5/8/26 16:24 AARONTRU,LLO C:\USERS\AARONTRU,LLO\DOXIT\100\ENGINEERING\71\16\ENGINEERING\MIP PROGRAM OF WORK\FY-26\CARSON - TRES PIEDRAS WATERLINE REPLACEMENT\DWG\TP WATERLINE IMPROVEMENTS.DWG

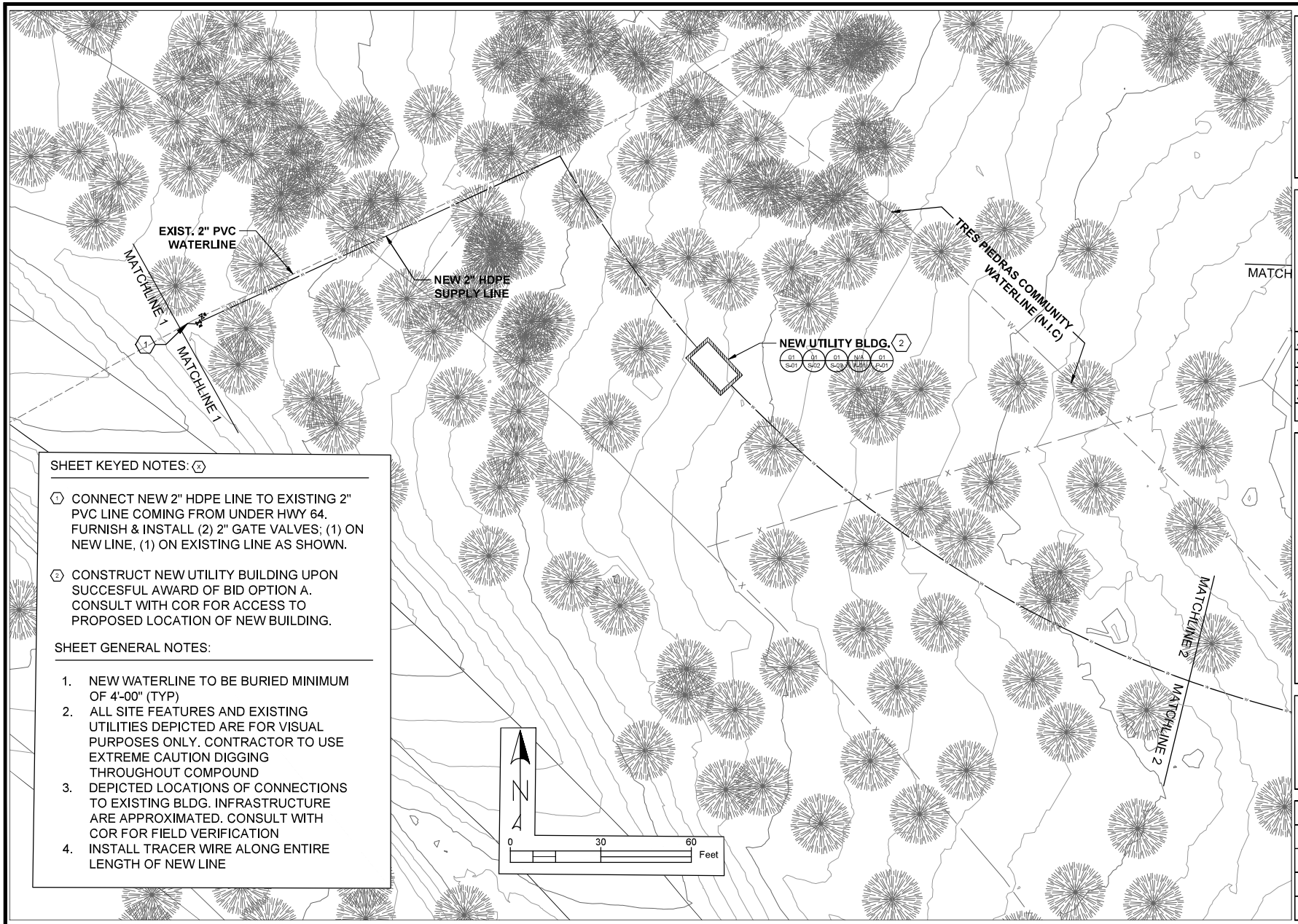

SHEET KEYED NOTES: (x)

(1) CONNECT NEW 2" HDPE LINE TO EXISTING 2" PVC LINE COMING FROM UNDER HWY 64. FURNISH & INSTALL (2) 2" GATE VALVES; (1) ON NEW LINE, (1) ON EXISTING LINE AS SHOWN.

(2) CONSTRUCT NEW UTILITY BUILDING UPON SUCCESFUL AWARD OF BID OPTION A. CONSULT WITH COR FOR ACCESS TO PROPOSED LOCATION OF NEW BUILDING.

SHEET GENERAL NOTES:

1. NEW WATERLINE TO BE BURIED MINIMUM OF 4'-00" (TYP)
2. ALL SITE FEATURES AND EXISTING UTILITIES DEPICTED ARE FOR VISUAL PURPOSES ONLY. CONTRACTOR TO USE EXTREME CAUTION DIGGING THROUGHOUT COMPOUND
3. DEPICTED LOCATIONS OF CONNECTIONS TO EXISTING BLDG. INFRASTRUCTURE ARE APPROXIMATED. CONSULT WITH COR FOR FIELD VERIFICATION
4. INSTALL TRACER WIRE ALONG ENTIRE LENGTH OF NEW LINE

USDA FOREST SERVICE

United States Department of Agriculture
Forest Service

R03
SOUTHWESTERN REGION

STAMPS, LOGOS, AND SEALS

LICENSE OF MISTER ARON TRUJILLO
NEW MEXICO
36919
PROFESSIONAL ENGINEER
4/9/25

NO.	REVISION / ISSUE	DATE
4		
3		
2		
1		

PROJECT NAME

WATER SYSTEM IMPROVEMENTS

CARSON NATIONAL FOREST

TRES PIEDRAS RANGER DISTRICT

DRAWING TITLE

BASE BID: DISTRICT COMPOUND

DATE 04/07/2025	ARCHIVE NO.
DESIGNER A.TRU	DRAWING SHEET NO. CU-05
DRAWN A.TRU	
CHECKED X.XXX	
PROJECT NO.	SHEET 08 OF 22

5/6/26 16:24 A.ARONTRUJILLO C:\USERS\AARONTRUJILLO\DROPBOX\17100\ENGINEERING\17116\ENGINEERING\17116 CARSON - TRES PIEDRAS WATERLINE REPLACEMENT\DWG\TP WATERLINE IMPROVEMENTS.DWG

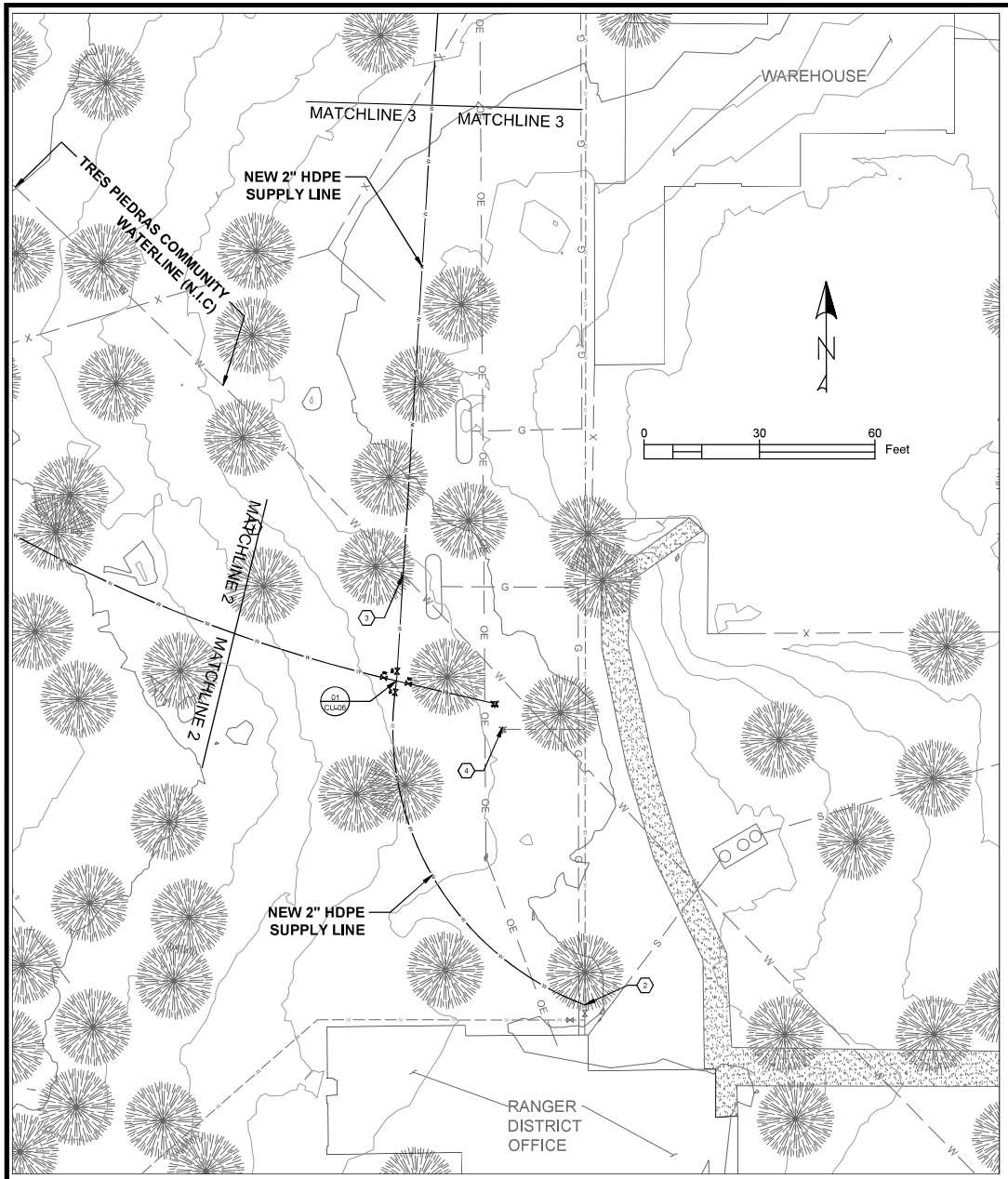

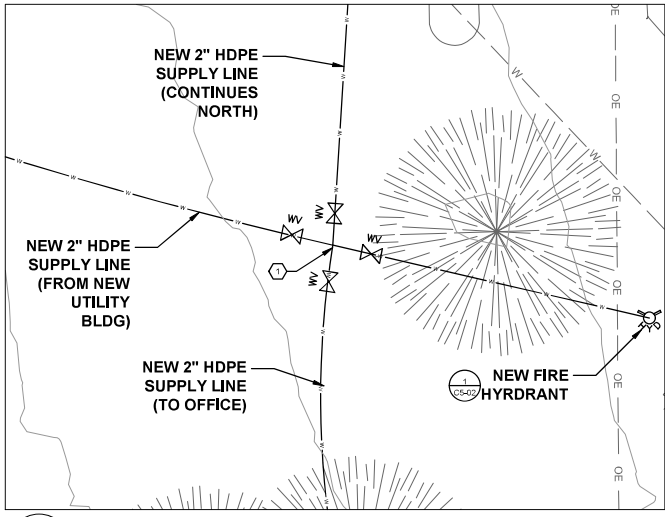

01 CU-06 CROSSING ENLARGEMENT

SCALE: 1" = 5'

SHEET KEYED NOTES: (X)

(1) INSTALL WATERLINE 4 WAY FITTING. FURNISH & INSTALL ± 107 LF OF 2" HDPE SOUTH TO SUPPLY DISTRICT OFFICE, ± 26 LF EAST TO NEW HYDRANT. CONTINUE NORTH WITH NEW 2" HDPE AS DEPICTED; FURNISH AND INSTALL (1) 4 WAY FITTING COMPLETE W/ (4) 2" GATE VALVES & (1) FIRE HYDRANT. INSTALL AS DEPICTED IN ENLARGEMENT 01/CU-06

(2) CONNECT TO EXISTING WATERLINE SUPPLYING THE RANGER DISTRICT OFFICE PRIOR TO EXISTING VALVE AS SHOWN

(3) APPROXIMATE LOCATION OF EXISTING COMMUNITY WATERLINE CROSSING

(4) REMOVE EXISTING FIRE HYDRANT

SHEET GENERAL NOTES:

1. NEW WATERLINE TO BE BURIED MINIMUM OF 4'-00" (TYP)
2. ALL SITE FEATURES AND EXISTING UTILITIES DEPICTED ARE FOR VISUAL PURPOSES ONLY. CONTRACTOR TO USE EXTREME CAUTION DIGGING THROUGHOUT COMPOUND
3. DEPICTED LOCATIONS OF CONNECTIONS TO EXISTING BLDG. INFRASTRUCTURE ARE APPROXIMATED. CONSULT WITH COR FOR FIELD VERIFICATION
4. INSTALL TRACER WIRE ALONG ENTIRE LENGTH OF NEW LINE

USDA FOREST SERVICE

United States Department of Agriculture
Forest Service

R03
SOUTHWESTERN REGION

STAMPS, LOGOS, AND SEALS

LICENSE OF MISTER ARCHITECT
NEW MEXICO
30919
PROFESSIONAL ENGINEER
8/19/25

NO.	REVISION / ISSUE	DATE
4		
3		
2		
1		

PROJECT NAME

WATER SYSTEM IMPROVEMENTS

CARSON NATIONAL FOREST

TRES PIEDRAS RANGER DISTRICT

DRAWING TITLE

BASE BID: DISTRICT COMPOUND

DATE 04/07/2025	ARCHIVE NO.
DESIGNER A.TRU	DRAWING SHEET NO. CU-06
DRAWN A.TRU	
CHECKED X.XXX	
PROJECT NO.	SHEET 09 OF 22

5/6/26 16:24 AARONTRU,LLC C:\USERS\AARONTRU,LLC\ORDX\17100\ENGINEERING\17116\ENGINEERING\17116\ENGINEERING\ENVIRONMENTAL IMPROVEMENTS\CARSON - TRES PIEDRAS WATERLINE REPLACEMENT\DWG\TP WATERLINE IMPROVEMENTS.DWG

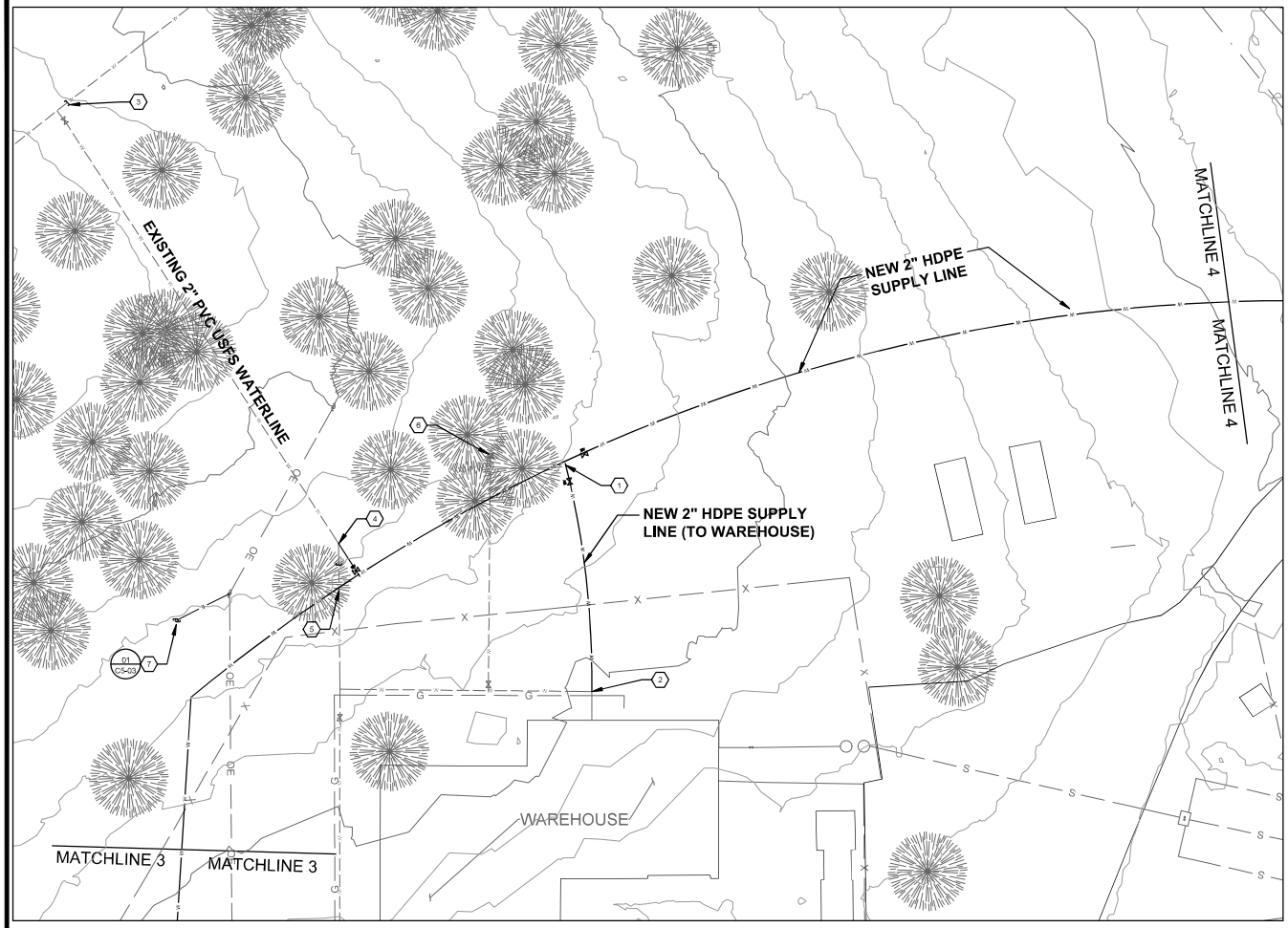

SHEET KEYED NOTES: (X)

(1) TEE OFF NEW WATERLINE. FURNISH & INSTALL ± 58 LF OF 2" HDPE SOUTH TO WAREHOUSE. CONTINUE EAST WITH NEW 2" HDPE AS DEPICTED; FURNISH AND INSTALL (1) TEE COMPLETE (2) 2" GATE VALES.

(2) CONNECT TO EXISTING PVC WATERLINE AT WAREHOUSE

(3) CUT AND CAP EXISTING 2" PVC WATERLINE NW OF TEE AS DEPICTED. ABANDON IN PLACE.

(4) CONNECT NEW 2" HDPE WATERLINE TO EXISTING 2" PVC WATERLINE, CAP EXISTING PVC LINE SOUTH OF TIE IN; FURNISH & INSTALL ± 10 LF OF 2" HDPE WATERLINE, (1) 2" HDPE TEE, (1) 2" HDPE TO PVC TRANSITION FITTING, (1) 2" PVC CAP

(5) APPROXIMATE LOCATION WHERE NEW WATERLINE CROSSES EXISTING.

(6) REMOVE EXISTING FIRE HYDRANT. EXISTING HYDRANT SHALL BE CONSIDERED NON-SALVAGEABLE

(7) **UPON AWARD OF OPTION A** FURNISH AND INSTALL SECONDARY ELECTRIC RISER POLE W/ METER SOCKET (MAX DISTANCE FROM PRIMARY POLE = 15'-00")

SHEET GENERAL NOTES:

1. NEW WATERLINE TO BE BURIED MINIMUM OF 4'-00" (TYP)
2. ALL SITE FEATURES AND EXISTING UTILITIES DEPICTED ARE FOR VISUAL PURPOSES ONLY. CONTRACTOR TO USE EXTREME CAUTION DIGGING THROUGHOUT COMPOUND
3. DEPICTED LOCATIONS OF CONNECTIONS TO EXISTING BLDG. INFRASTRUCTURE ARE APPROXIMATED. CONSULT WITH COR FOR FIELD VERIFICATION
4. INSTALL TRACER WIRE ALONG ENTIRE LEGTH OF NEW LINE

United States Department of Agriculture
Forest Service

R03
SOUTHWESTERN REGION

STAMPS, LOGOS, AND SEALS

LICENSE OF MISTER ARCHITECT
NEW MEXICO
36919
PROFESSIONAL ENGINEER
4/19/25

NO.	REVISION / ISSUE	DATE
4		
3		
2		
1		

PROJECT NAME

WATER SYSTEM IMPROVEMENTS

CARSON NATIONAL FOREST

TRES PIEDRAS RANGER DISTRICT

DRAWING TITLE

BASE BID: DISTRICT COMPOUND

DATE 04/07/2025	ARCHIVE NO.
DESIGNER A.TRU	DRAWING SHEET NO. CU-07
DRAWN A.TRU	
CHECKED X.XXX	
PROJECT NO.	SHEET 10 OF 22

5/8/26 16:24 AARONTRU,ILLO C:\USERS\AARONTRU,ILLO\DROPBOX\17100\ENGINEERING\17100 ENGINEERING\CARSON\TRES PIEDRAS WATERLINE REPLACEMENT\WSIP WATERLINE IMPROVEMENTS.DWG

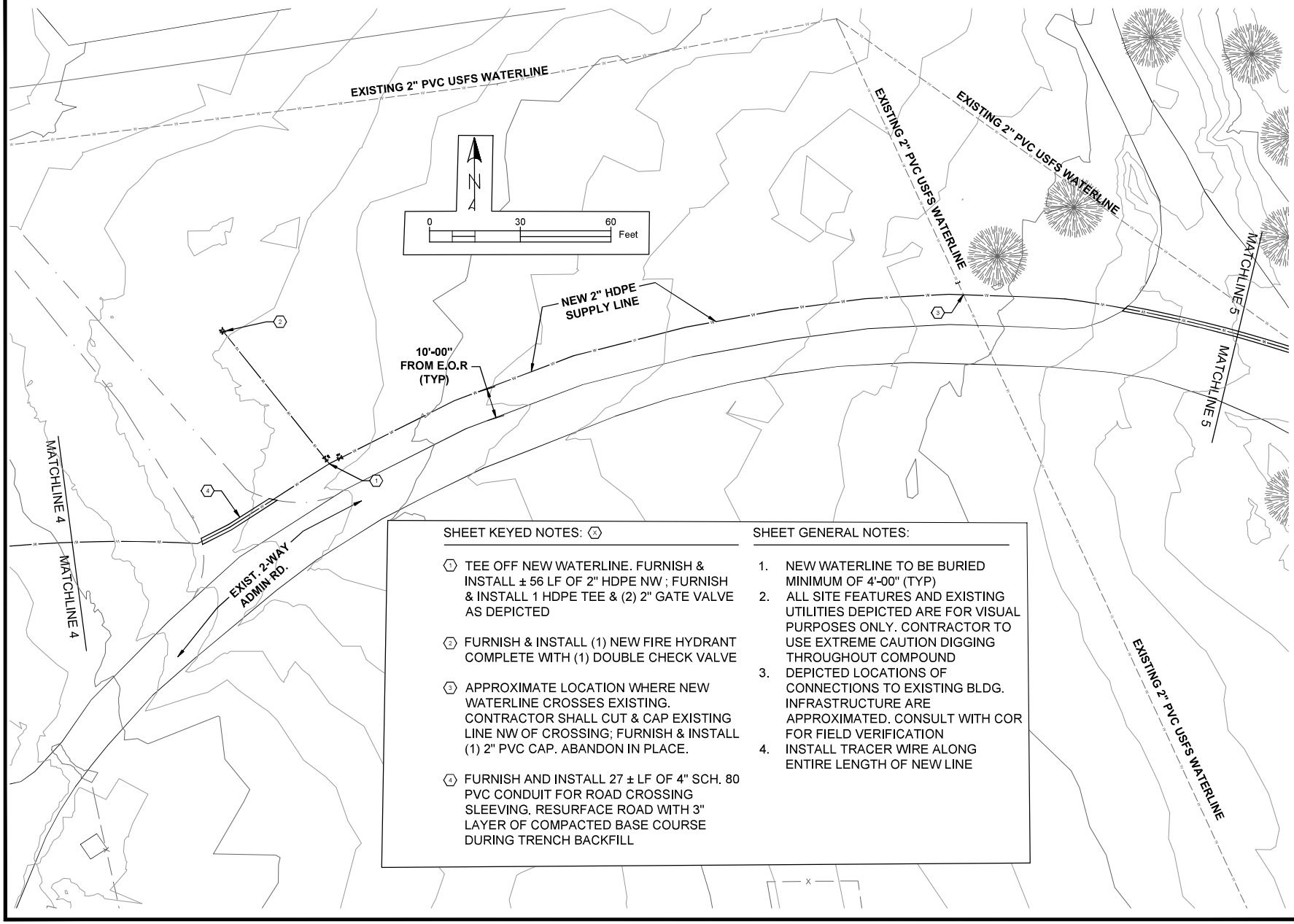

SHEET KEYED NOTES: (X)

(1) TEE OFF NEW WATERLINE. FURNISH & INSTALL ± 56 LF OF 2" HDPE NW ; FURNISH & INSTALL 1 HDPE TEE & (2) 2" GATE VALVE AS DEPICTED

(2) FURNISH & INSTALL (1) NEW FIRE HYDRANT COMPLETE WITH (1) DOUBLE CHECK VALVE

(3) APPROXIMATE LOCATION WHERE NEW WATERLINE CROSSES EXISTING. CONTRACTOR SHALL CUT & CAP EXISTING LINE NW OF CROSSING; FURNISH & INSTALL (1) 2" PVC CAP. ABANDON IN PLACE.

(4) FURNISH AND INSTALL 27 ± LF OF 4" SCH. 80 PVC CONDUIT FOR ROAD CROSSING SLEEVING. RESURFACE ROAD WITH 3" LAYER OF COMPACTED BASE COURSE DURING TRENCH BACKFILL

SHEET GENERAL NOTES:

1. NEW WATERLINE TO BE BURIED MINIMUM OF 4'-00" (TYP)
2. ALL SITE FEATURES AND EXISTING UTILITIES DEPICTED ARE FOR VISUAL PURPOSES ONLY. CONTRACTOR TO USE EXTREME CAUTION DIGGING THROUGHOUT COMPOUND
3. DEPICTED LOCATIONS OF CONNECTIONS TO EXISTING BLDG. INFRASTRUCTURE ARE APPROXIMATED. CONSULT WITH COR FOR FIELD VERIFICATION
4. INSTALL TRACER WIRE ALONG ENTIRE LENGTH OF NEW LINE

USDA FOREST SERVICE

United States Department of Agriculture
Forest Service

R03
SOUTHWESTERN REGION

STAMPS, LOGOS, AND SEALS

LICENSE OF MISTER ARCHIVE
NEW MEXICO
36919
PROFESSIONAL ENGINEER
4/9/25

NO.	REVISION / ISSUE	DATE
4		
3		
2		
1		

PROJECT NAME

WATER SYSTEM IMPROVEMENTS

CARSON NATIONAL FOREST

TRES PIEDRAS RANGER DISTRICT

DRAWING TITLE

BASE BID: DISTRICT COMPOUND

DATE 04/07/2025	ARCHIVE NO.
DESIGNER A.TRU	DRAWING SHEET NO. CU-08
DRAWN A.TRU	
CHECKED X.XXX	
PROJECT NO.	SHEET 11 OF 22

5/8/26 16:24 AARON.TRU JLLO C:\USERS\AARON.TRU\JLLOBOX\IT100\ENGINEERING\71165\ENGINEERING\MIP PROGRAM OF WORK\FY-26\CARSON - TRES PIEDRAS WATERLINE REPLACEMENT\DWG\TP WATERLINE IMPROVEMENTS.DWG

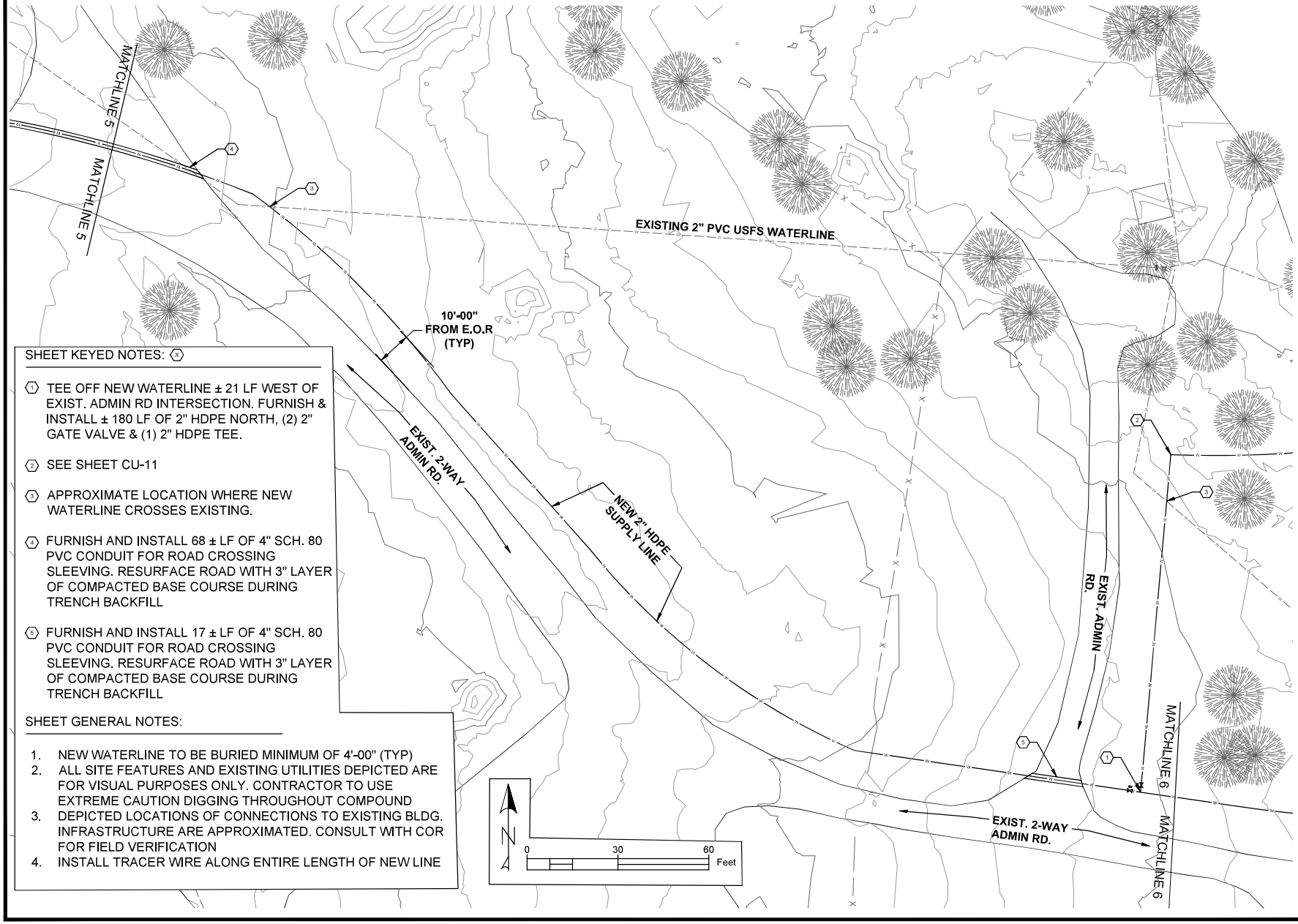

SHEET KEYED NOTES: (X)

(1) TEE OFF NEW WATERLINE ± 21 LF WEST OF EXIST. ADMIN RD INTERSECTION. FURNISH & INSTALL ± 180 LF OF 2" HDPE NORTH, (2) 2" GATE VALVE & (1) 2" HDPE TEE.

(2) SEE SHEET CU-11

(3) APPROXIMATE LOCATION WHERE NEW WATERLINE CROSSES EXISTING.

(4) FURNISH AND INSTALL 68 ± LF OF 4" SCH. 80 PVC CONDUIT FOR ROAD CROSSING SLEEVING. RESURFACE ROAD WITH 3" LAYER OF COMPACTED BASE COURSE DURING TRENCH BACKFILL

(5) FURNISH AND INSTALL 17 ± LF OF 4" SCH. 80 PVC CONDUIT FOR ROAD CROSSING SLEEVING. RESURFACE ROAD WITH 3" LAYER OF COMPACTED BASE COURSE DURING TRENCH BACKFILL

SHEET GENERAL NOTES:

1. NEW WATERLINE TO BE BURIED MINIMUM OF 4'-00" (TYP)
2. ALL SITE FEATURES AND EXISTING UTILITIES DEPICTED ARE FOR VISUAL PURPOSES ONLY. CONTRACTOR TO USE EXTREME CAUTION DIGGING THROUGHOUT COMPOUND
3. DEPICTED LOCATIONS OF CONNECTIONS TO EXISTING BLDG. INFRASTRUCTURE ARE APPROXIMATED. CONSULT WITH COR FOR FIELD VERIFICATION
4. INSTALL TRACER WIRE ALONG ENTIRE LENGTH OF NEW LINE

USDA FOREST SERVICE

United States Department of Agriculture
Forest Service

R03
SOUTHWESTERN REGION

STAMPS, LOGOS, AND SEALS

LICENSE OF MISTER ARCHITECT
NEW MEXICO
30919
PROFESSIONAL ENGINEER
8/19/25

NO.	REVISION / ISSUE	DATE
4		
3		
2		
1		

PROJECT NAME

WATER SYSTEM IMPROVEMENTS

CARSON NATIONAL FOREST

TRES PIEDRAS RANGER DISTRICT

DRAWING TITLE

BASE BID: DISTRICT COMPOUND

DATE 04/07/2025	ARCHIVE NO.
DESIGNER A.TRU	DRAWING SHEET NO. CU-09
DRAWN A.TRU	
CHECKED X.XXX	
PROJECT NO.	SHEET 12 OF 22

5/8/26 16:24 AARONTRU,LLO C:\USERS\AARONTRU,LLO\DOXIT\100\ENGINEERING\71165\ENGINEERING\IMPROVEMENTS\PROGRAM OF WORK\FY-26\CARSON - TRES PIEDRAS WATERLINE REPLACEMENT\DWG\TP WATERLINE IMPROVEMENTS.DWG

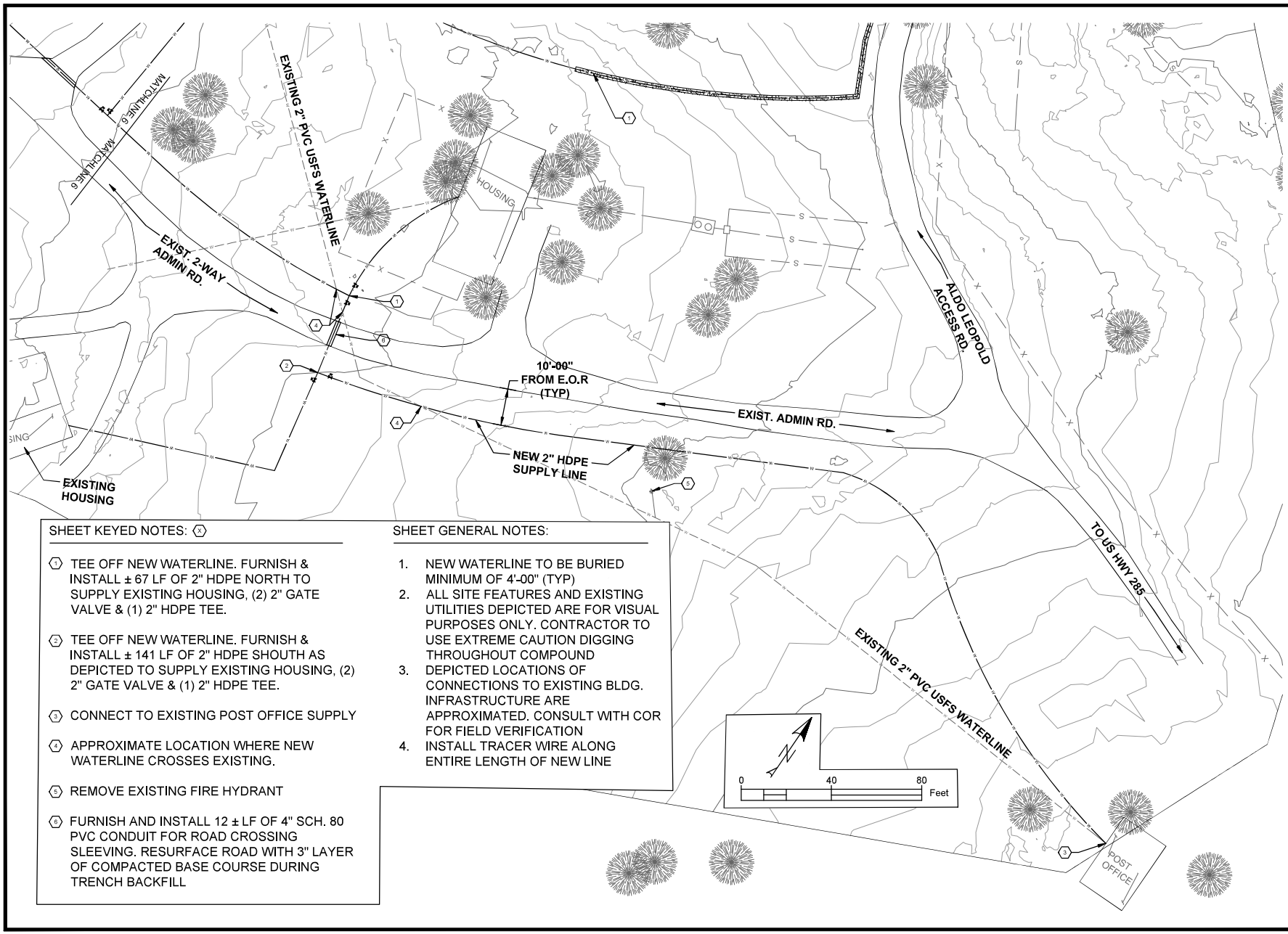

SHEET KEYED NOTES: (X)

(1) TEE OFF NEW WATERLINE. FURNISH & INSTALL ± 67 LF OF 2" HDPE NORTH TO SUPPLY EXISTING HOUSING, (2) 2" GATE VALVE & (1) 2" HDPE TEE.

(2) TEE OFF NEW WATERLINE. FURNISH & INSTALL ± 141 LF OF 2" HDPE SHOUTH AS DEPICTED TO SUPPLY EXISTING HOUSING, (2) 2" GATE VALVE & (1) 2" HDPE TEE.

(3) CONNECT TO EXISTING POST OFFICE SUPPLY

(4) APPROXIMATE LOCATION WHERE NEW WATERLINE CROSSES EXISTING.

(5) REMOVE EXISTING FIRE HYDRANT

(6) FURNISH AND INSTALL 12 ± LF OF 4" SCH. 80 PVC CONDUIT FOR ROAD CROSSING SLEEVING. RESURFACE ROAD WITH 3" LAYER OF COMPACTED BASE COURSE DURING TRENCH BACKFILL

SHEET GENERAL NOTES:

1. NEW WATERLINE TO BE BURIED MINIMUM OF 4'-00" (TYP)
2. ALL SITE FEATURES AND EXISTING UTILITIES DEPICTED ARE FOR VISUAL PURPOSES ONLY. CONTRACTOR TO USE EXTREME CAUTION DIGGING THROUGHOUT COMPOUND
3. DEPICTED LOCATIONS OF CONNECTIONS TO EXISTING BLDG. INFRASTRUCTURE ARE APPROXIMATED. CONSULT WITH COR FOR FIELD VERIFICATION
4. INSTALL TRACER WIRE ALONG ENTIRE LENGTH OF NEW LINE

USDA FOREST SERVICE

United States Department of Agriculture
Forest Service

R03
SOUTHWESTERN REGION

STAMPS, LOGOS, AND SEALS

LICENSE OF MISTER ARON TRUJILLO
NEW MEXICO
36919
PROFESSIONAL ENGINEER
8/19/25

NO.	REVISION / ISSUE	DATE
4		
3		
2		
1		

PROJECT NAME

WATER SYSTEM IMPROVEMENTS

CARSON NATIONAL FOREST

TRES PIEDRAS RANGER DISTRICT

DRAWING TITLE

BASE BID: DISTRICT COMPOUND

DATE 04/07/2025	ARCHIVE NO.
DESIGNER A.TRU	DRAWING SHEET NO. CU-10
DRAWN A.TRU	
CHECKED X.XXX	
PROJECT NO.	SHEET 13 OF 22

5/8/26 16:24 AARONTRUJILLO C:\USERS\AARONTRUJILLO\OneDrive - USDA\DESKTOP\WORK\FY26\CARSON - TRES PIEDRAS WATERLINE REPLACEMENT\DWG\TP WATERLINE IMPROVEMENTS.DWG

SHEET GENERAL NOTES:

1. NEW WATERLINE TO BE BURIED MINIMUM OF 4'-00" (TYP)
2. ALL SITE FEATURES AND EXISTING UTILITIES DEPICTED ARE FOR VISUAL PURPOSES ONLY. CONTRACTOR TO USE EXTREME CAUTION DIGGING THROUGHOUT COMPOUND
3. DEPICTED LOCATIONS OF CONNECTIONS TO EXISTING BLDG. INFRASTRUCTURE ARE APPROXIMATED. CONSULT WITH COR FOR FIELD VERIFICATION
4. INSTALL TRACER WIRE ALONG ENTIRE LENGTH OF NEW LINE

SHEET KEYED NOTES: (X)

(1) EXECUTE 90° TURN. FURNISH & INSTALL ± 521 LF OF 2" HDPE TO SUPPLY ALDO LEOPOLD HOUSE & (1) 90° 2" HDPE FITTING.

(2) TEE OFF MAIN WATERLINE; FURNISH & INSTALL (1) NEW FIRE HYDRANT, (1) NEW 2" ISOLATION VALVE

(3) CONNECT TO EXISTING SUPPLY LINE AT ALDO LEOPOLD HOUSE.

(4) ABANDON EXISTING YARD HYDRANT & CAP EXSISTING LINE AS SHOWN

(5) APPROXIMATE LOCATION WHERE NEW WATERLINE CROSSES EXISTING.

(6) CONCRETE ENCASE NEW 2" HDPE WATERLINE FOR ± 170 LF. CONSULT WITH COR FOR BEGINNING AND ENDING LOCATIONS OF ENCASEMENT

(7) CONCRETE ENCASE NEW 2" HDPE WATERLINE FOR ± 35 LF. CONSULT WITH COR FOR BEGINNING AND ENDING LOCATIONS OF ENCASEMENT

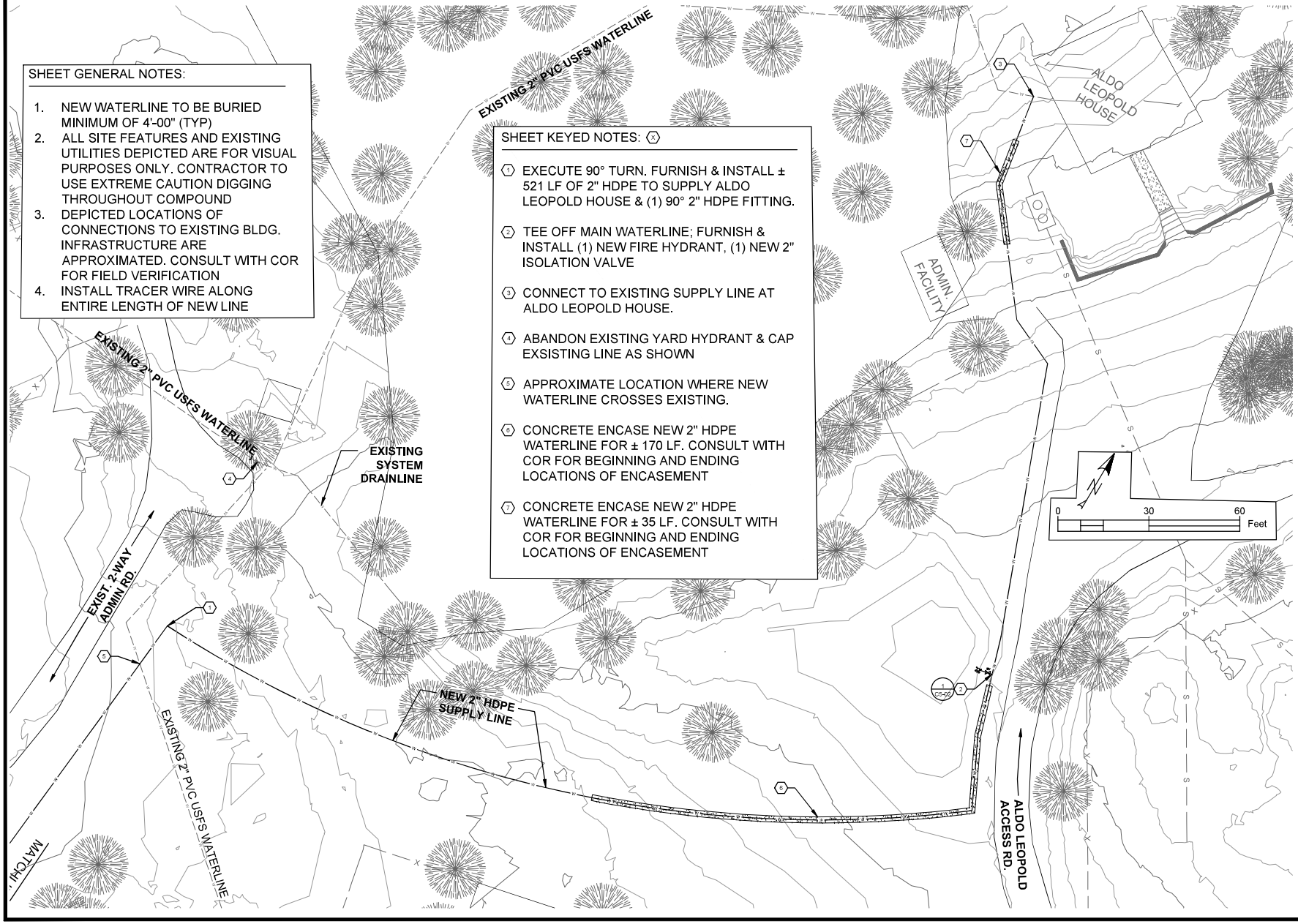

USDA FOREST SERVICE

United States Department of Agriculture
Forest Service

R03
SOUTHWESTERN REGION

STAMPS, LOGOS, AND SEALS

NO.	REVISION / ISSUE	DATE
4		
3		
2		
1		

PROJECT NAME

WATER SYSTEM IMPROVEMENTS

CARSON NATIONAL FOREST

TRES PIEDRAS RANGER DISTRICT

DRAWING TITLE

BASE BID: DISTRICT COMPOUND

DATE 04/07/2025	ARCHIVE NO.
DESIGNER A.TRU	DRAWING SHEET NO. CU-11
DRAWN A.TRU	
CHECKED X.XXX	
PROJECT NO.	SHEET 14 OF 22

5/8/26 16:24 AARONTRU,ILLO C:\USERS\AARONTRU\ILLOBOX\7100\ENGINEERING\71100ENGINEERING\MAINTPROGRAM OF WORK\FY-26\CARSON - TRES PIEDRAS WATERLINE REPLACEMENT\DWG\TP WATERLINE IMPROVEMENTS.DWG

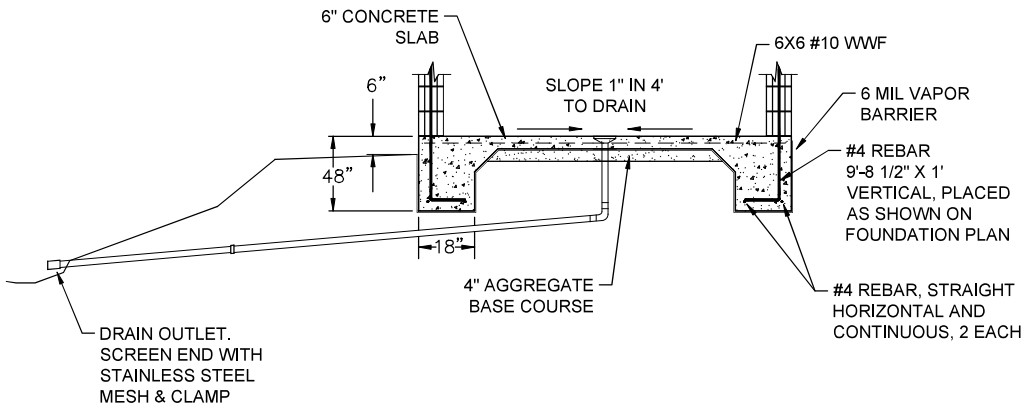

FLOOR & WALL SECTION A–A'

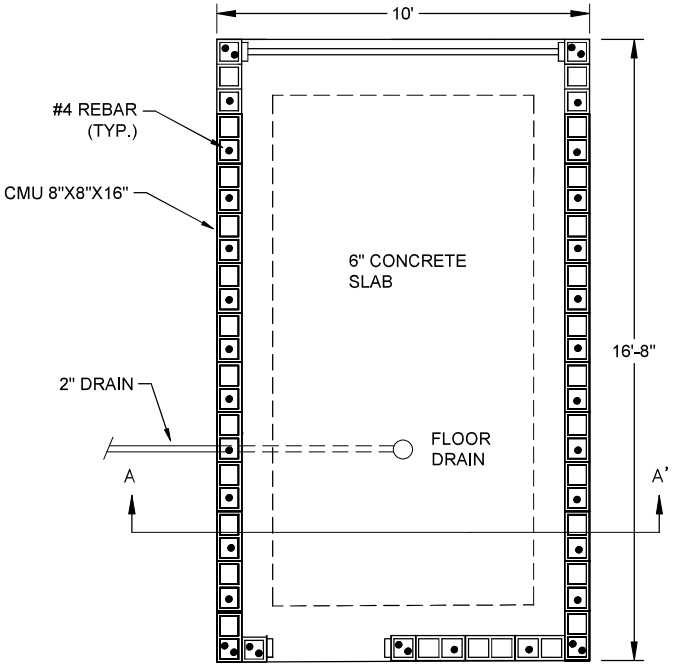

NOTES

DRAIN OUTLET SHALL BE 20' MINIMUM FROM PUMP HOUSE. COR WILL STAKE LOCATION.

PLACE REBAR WITH 3" CONCRETE COVER

01 / S-01 FOUNDATION PLAN

NOT TO SCALE

USDA FOREST SERVICE

United States Department of Agriculture
Forest Service

R03
SOUTHWESTERN REGION

STAMPS, LOGOS, AND SEALS

NO.	REVISION / ISSUE	DATE
4		
3		
2		
1		

PROJECT NAME

WATER SYSTEM IMPROVEMENTS

CARSON NATIONAL FOREST

TRES PIEDRAS RANGER DISTRICT

DRAWING TITLE

UTILITY BUILDING FOUNDATION PLAN

DATE 04/07/2025	ARCHIVE NO.
DESIGNER A.TRU	DRAWING SHEET NO. S-01
DRAWN A.TRU	
CHECKED X.XXX	
PROJECT NO.	SHEET 15 OF 22

5/8/26 16:24 AARONTRU,ILLO C:\USERS\AARONTRU,ILLO\DROPBOX\17100\ENGINEERING\17100ENGINEERING\PROGRAM OF WORK\FY-26\CARSON - TRES PIEDRAS WATER LINE REPLACEMENT\DWG\TP WATER LINE IMPROVEMENTS.DWG

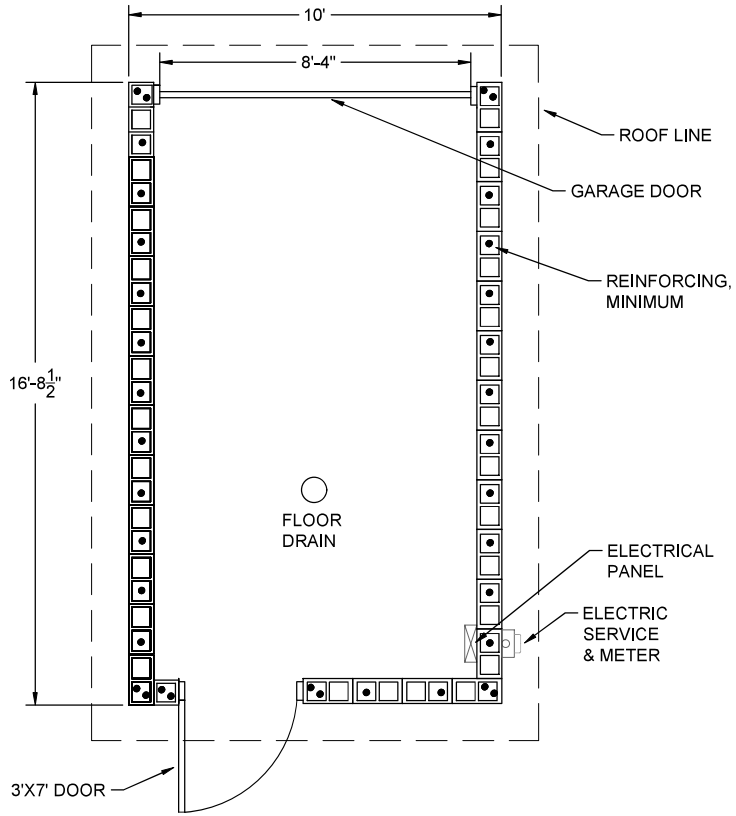

FLOOR PLAN

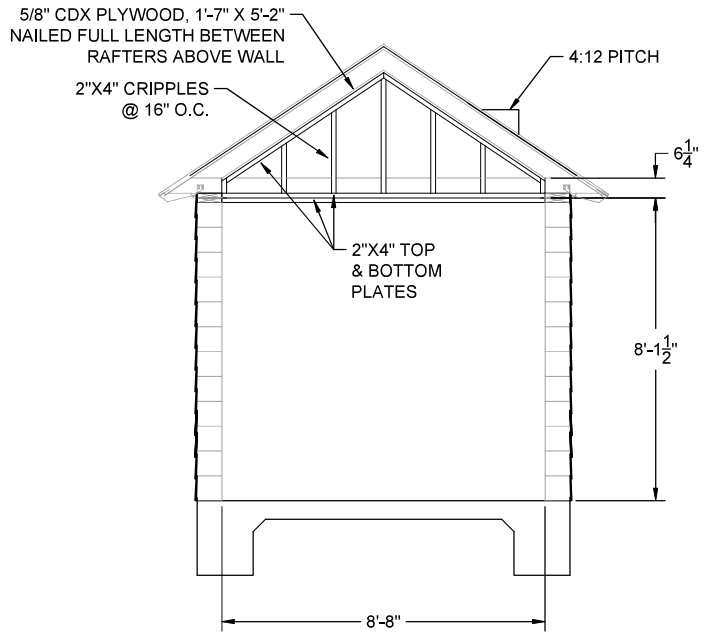

CEILING FRAMING PLAN

NOTES

EXTERIOR OF STRUCTURE SHALL BE COMPLETELY SEALED AGAINST ENTRANCE BY INSECTS AND RODENTS.

CONTRACTOR SHALL SUBMIT A PROPOSED LAYOUT OF EQUIPMENT, SWITCHES, LIGHTING, AND RECEPTACLES.

01 / S-02 FRAMING PLAN

NOT TO SCALE

United States Department of Agriculture
Forest Service

R03
SOUTHWESTERN REGION

STAMPS, LOGOS, AND SEALS

NO.	REVISION / ISSUE	DATE
4		
3		
2		
1		

PROJECT NAME

WATER SYSTEM IMPROVEMENTS

CARSON NATIONAL FOREST

TRES PIEDRAS RANGER DISTRICT

DRAWING TITLE

UTILITY BUILDING FRAMING PLAN

DATE 04/07/2025	ARCHIVE NO.
DESIGNER A.TRU	DRAWING SHEET NO. S-02
DRAWN A.TRU	
CHECKED X.XXX	
PROJECT NO.	SHEET 16 OF 22

5/8/26 16:24 AARONTRU,LLO C:\USERS\AARONTRU,LLO\DOXIT\100\ENGINEERING\71100\ENGINEERING\71100\ENGINEERING\WIMP\PROGRAM OF WORK\FY-26\CARSON - TRES PIEDRAS WATERLINE REPLACEMENT\OWSTP WATERLINE IMPROVEMENTS.DWG

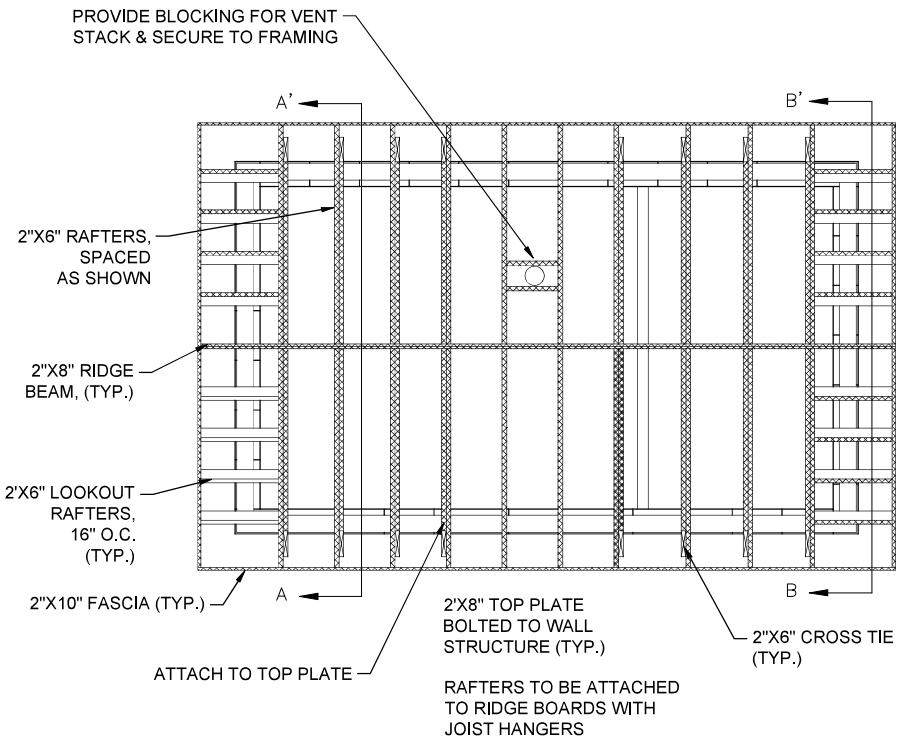

01
S-03

ROOF FRAMING PLAN

NOT TO SCALE

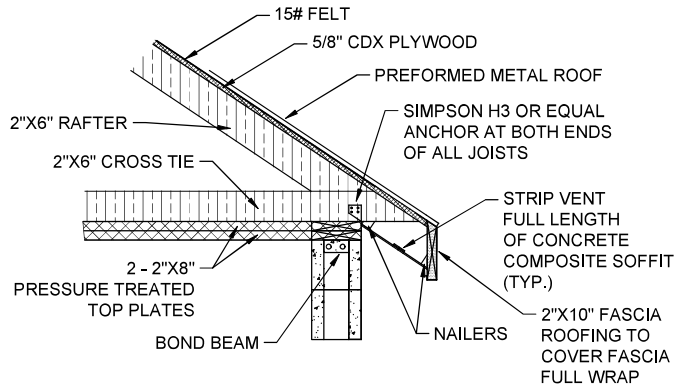

ROOF CONNECTION

NOT TO SCALE

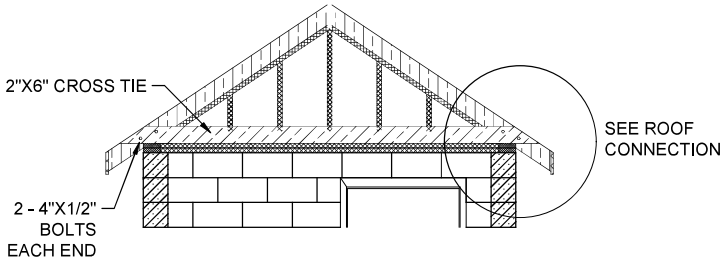

SECTION A–A'

NOT TO SCALE

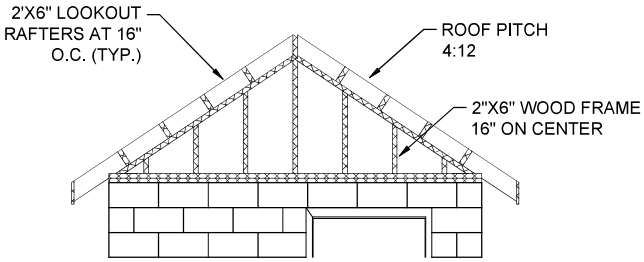

SECTION B–B'

NOT TO SCALE

USDA FOREST SERVICE

United States Department of Agriculture
Forest Service

R03
SOUTHWESTERN REGION

STAMPS, LOGOS, AND SEALS

NO.	REVISION / ISSUE	DATE
4		
3		
2		
1		

PROJECT NAME

WATER SYSTEM IMPROVEMENTS

CARSON NATIONAL FOREST

TRES PIEDRAS RANGER DISTRICT

DRAWING TITLE

UTILITY BUILDING ROOF FRAMING PLAN

DATE 04/07/2025	ARCHIVE NO.
DESIGNER A.TRU	DRAWING SHEET NO. S-03
DRAWN A.TRU	
CHECKED X.XXX	
PROJECT NO.	SHEET 17 OF 22

5/8/26 16:24 AARONTRU LOC: C:\USERS\AARONTRU\LOCDOX\17100\ENGINEERING\17100\ENGINEERING\17100 IMP PROGRAM OF WORK\FY-26\CARSON - TRES PIEDRAS WATER LINE REPLACEMENT\DWG\TP WATER LINE IMPROVEMENTS.DWG

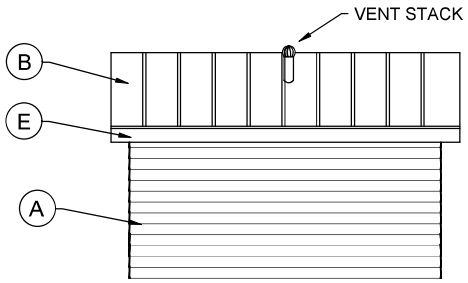

SIDE ELEVATION

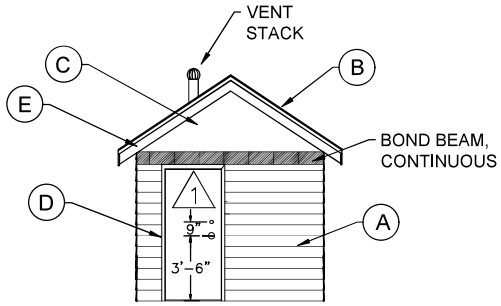

FRONT ELEVATION

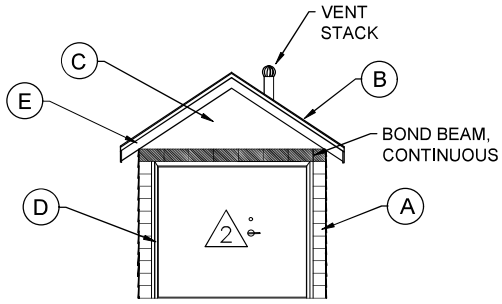

REAR ELEVATION

EXTERIOR FINISH SCHEDULE

	A	B	C	D	E
MATERIAL	STUCCO	METAL PANEL ROOF	STUCCO	METAL DOOR FRAME. SEE DOOR SCHEDULE	METAL FACIA EXTEND ROOF MATERIAL
FINISH	BRUSHED	FACTORY PAINTED	BRUSHED	PRIME AND PAINT ALL SURFACES	FACTORY PAINTED
COLOR	BUCKSIN/TAN: SUBMIT COLOR TO COR FOR SELECTION	RED: SUBMIT COLOR TO COR FOR SELECTION	BUCKSIN/TAN: SUBMIT COLOR TO COR FOR SELECTION	SUBMIT COLOR CHART TO COR FOR SELECTION	COLOR TO MATCH ROOF

INTERIOR FINISH SCHEDULE

FLOOR		WALLS		TRIM	
MATERIAL	FINISH	MATERIAL	FINISH	MATERIAL	FINISH
CONCRETE	STEEL TROWEL FINISH: WELBORN 501 EPOXY, TAN	CONCRETE BLOCK SMOOTH FACE FLUSH JOINT	N/A	N/A	N/A

DOOR AND HARDWARE SCHEDULE

	DOOR SIZE	DOOR & FRAME	SWEEP	HINGES	DEAD BOLT	LOCKSET LEVER
1	3'-0" X 7'-0" X 1-3/4"	HEAVY DUTY HOLLOW METAL	BRUSH	STANLEY HEAVY DUTY OR EQUAL	SCHLAGE B250 SERIES, GRADE 2	SCHLAGE ND SERIES, GRADE 1 CYLINDRICAL LOCK
2	8'-4" X 7'-0" X 1-3/4"	METAL GARAGE DOOR	BRUSH	PER MFR	PER MFR	PER MFR

USDA FOREST SERVICE

United States Department of Agriculture
Forest Service

R03
SOUTHWESTERN REGION

STAMPS, LOGOS, AND SEALS

LICENSE OF NEW MEXICO 36919 PROFESSIONAL ENGINEER
4/19/25

NO.	REVISION / ISSUE	DATE
4		
3		
2		
1		

PROJECT NAME

WATER SYSTEM IMPROVEMENTS

CARSON NATIONAL FOREST

TRES PIEDRAS RANGER DISTRICT

DRAWING TITLE

UTILITY BUILDING FINISH SCHEDULES

DATE 04/07/2025	ARCHIVE NO.
DESIGNER A.TRU	DRAWING SHEET NO. A-01
DRAWN A.TRU	
CHECKED X.XXX	
PROJECT NO.	SHEET 18 OF 22

5/6/26 16:24 AARONTRU,ALLO C:\USERS\AARONTRU,ALLO\DROPBOX\17-100\ENGINEERING\17-116\ENGINEERING\17-116 PROGRAM OF WORK\FY-26\CARSON - TRES PIEDRAS WATERLINE REPLACEMENT\DWG\TP WATERLINE IMPROVEMENTS.DWG

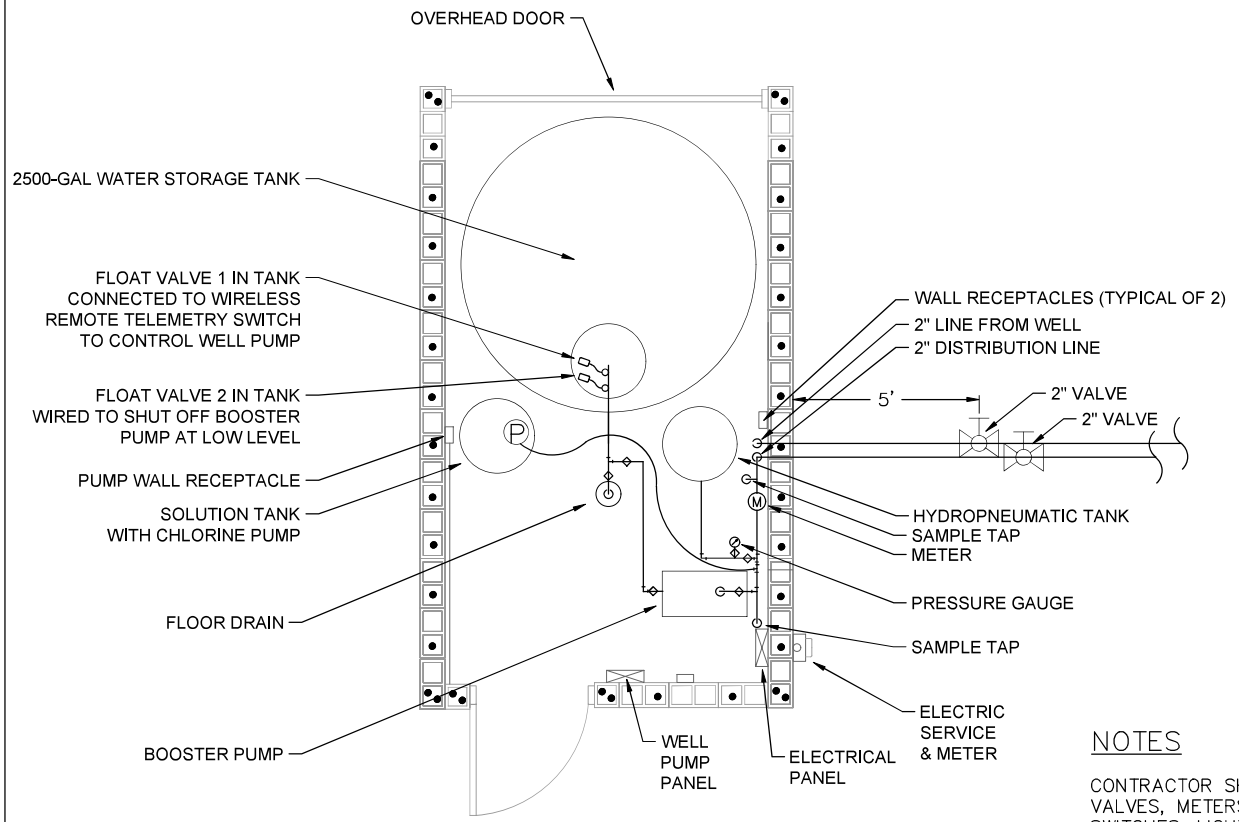

NOTES

CONTRACTOR SHALL SUBMIT A PROPOSED LAYOUT OF PIPING, VALVES, METERS, PUMPS, TANKS, ELECTRICAL EQUIPMENT, SWITCHES, LIGHTING, ELECTRICAL DEVICES AND RECEPTACLES, AND ALL OTHER EQUIPMENT FOR COR APPROVAL.

ALL EQUIPMENT AND PIPING SHALL HAVE ADEQUATE MEANS TO COMPLETELY DRAIN THE SYSTEM USING HOSE BIBS, UNIONS, AND VALVES AS APPROVED BY THE COR.

PUMP SHALL HAVE UNIONS ON BOTH SIDES

ALL BUILDING PLUMBING SHALL BE 2" SCH. 80 PVC

01
P-01
UTILITY BUILDING PLUMBING
NOT TO SCALE

United States Department of Agriculture
Forest Service

R03
SOUTHWESTERN REGION

STAMPS, LOGOS, AND SEALS

NO.	REVISION / ISSUE	DATE
4		
3		
2		
1		

PROJECT NAME
WATER SYSTEM IMPROVEMENTS

CARSON NATIONAL FOREST

TRES PIEDRAS RANGER DISTRICT

DRAWING TITLE
UTILITY BUILDING FINISH SCHEDULES

DATE 04/07/2025	ARCHIVE NO.
DESIGNER A.TRU	DRAWING SHEET NO. P-01
DRAWN A.TRU	
CHECKED X.XXX	
PROJECT NO.	SHEET 19 OF 22

5/8/26 16:24 AARONTRU,ILLO C:\USERS\AARONTRU,ILLO\DROPBOX\17100\ENGINEERING\17116\ENGINEERING\MGMT\PROGRAM OF WORK\FY-26\CARSON - TRES PIEDRAS WATERLINE REPLACEMENT\WGTP WATERLINE IMPROVEMENTS.DWG

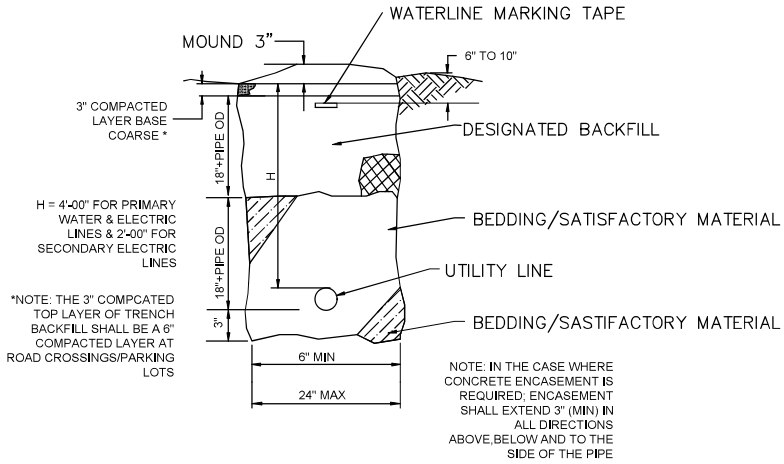

1 C5-01 UTILITY LINE TRENCH

NOT DRAWN TO SCALE

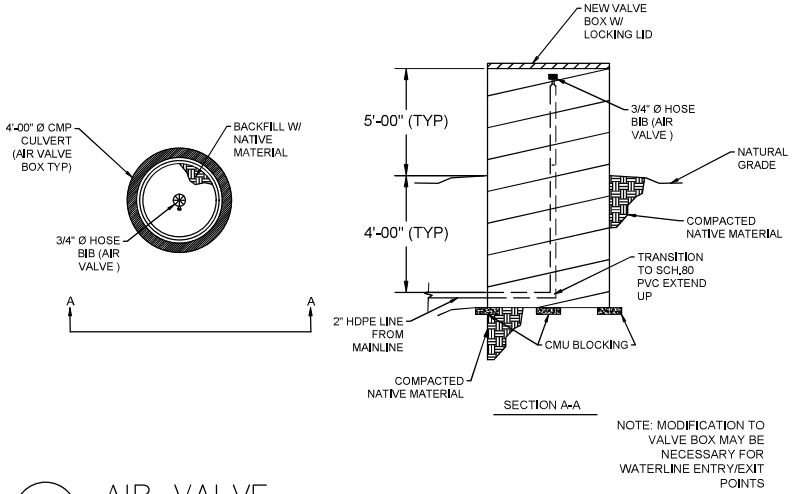

2 C5-01 AIR VALVE

NOT DRAWN TO SCALE

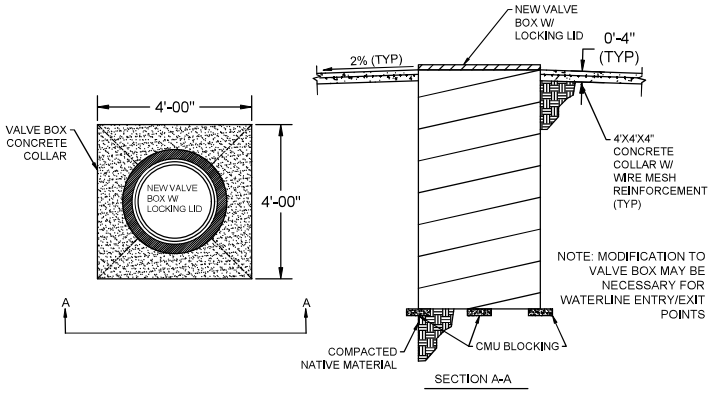

3 C5-01 VALVE BOX DETAIL

NOT DRAWN TO SCALE

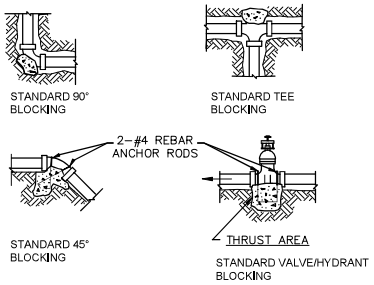

4 C5-01 THRUST BLOCKING

NOT DRAWN TO SCALE

USDA FOREST SERVICE

United States Department of Agriculture
Forest Service

R03
SOUTHWESTERN REGION

STAMPS, LOGOS, AND SEALS

NO.	REVISION / ISSUE	DATE
4		
3		
2		
1		

PROJECT NAME

WATER SYSTEM IMPROVEMENTS

CARSON NATIONAL FOREST

TRES PIEDRAS RANGER DISTRICT

DRAWING TITLE

UTILITY DETAILS

DATE 04/07/2025	ARCHIVE NO.
DESIGNER A.TRU	DRAWING SHEET NO. C5-01
DRAWN A.TRU	
CHECKED X.XXX	
PROJECT NO.	SHEET 20 OF 22

5/8/26 16:24 AARONTRUJILLO C:\USERS\AARONTRUJILLO\ONEDRIVE\ENGINEERING\01 ENGINEERING\01 PROGRAM OF WORK\FY-26\CARSON - TRES PIEDRAS WATERLINE REPLACEMENT\WSTP WATERLINE IMPROVEMENTS.DWG

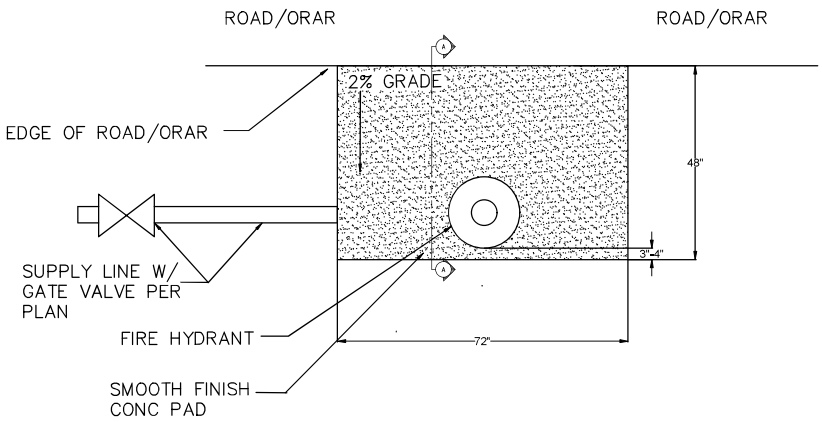

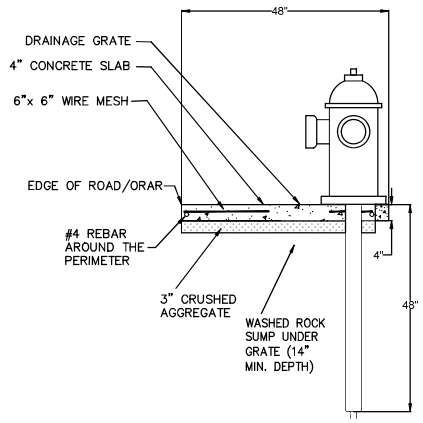

SECTION A–A

1
C5-02

FIRE HYDRANT

NOT DRAWN TO SCALE

USDA FOREST SERVICE

United States Department of Agriculture
Forest Service

R03
SOUTHWESTERN REGION

STAMPS, LOGOS, AND SEALS

LICENSE OF MISTEAD MICHAEL
NEW MEXICO
36919
PROFESSIONAL ENGINEER
4/19/25

NO.	REVISION / ISSUE	DATE
4		
3		
2		
1		

PROJECT NAME

WATER SYSTEM IMPROVEMENTS

CARSON NATIONAL FOREST

TRES PIEDRAS RANGER DISTRICT

DRAWING TITLE

UTILITY DETAILS

DATE 04/07/2025	ARCHIVE NO.
DESIGNER A.TRU	DRAWING SHEET NO. C5-02
DRAWN A.TRU	
CHECKED X.XXX	
PROJECT NO.	SHEET 21 OF 22

5/6/26 16:24 AARONTRU LLO C:\USERS\AARONTRU\LLO\BOX\X7100\ENGINEERING\X7100\ENGINEERING\21\16\ENGINEERING\PROGRAM OF WORK\FY-26\CARSON - TRES PIEDRAS WATER LINE REPLACEMENT\DWG\TP WATER LINE IMPROVEMENTS.DWG

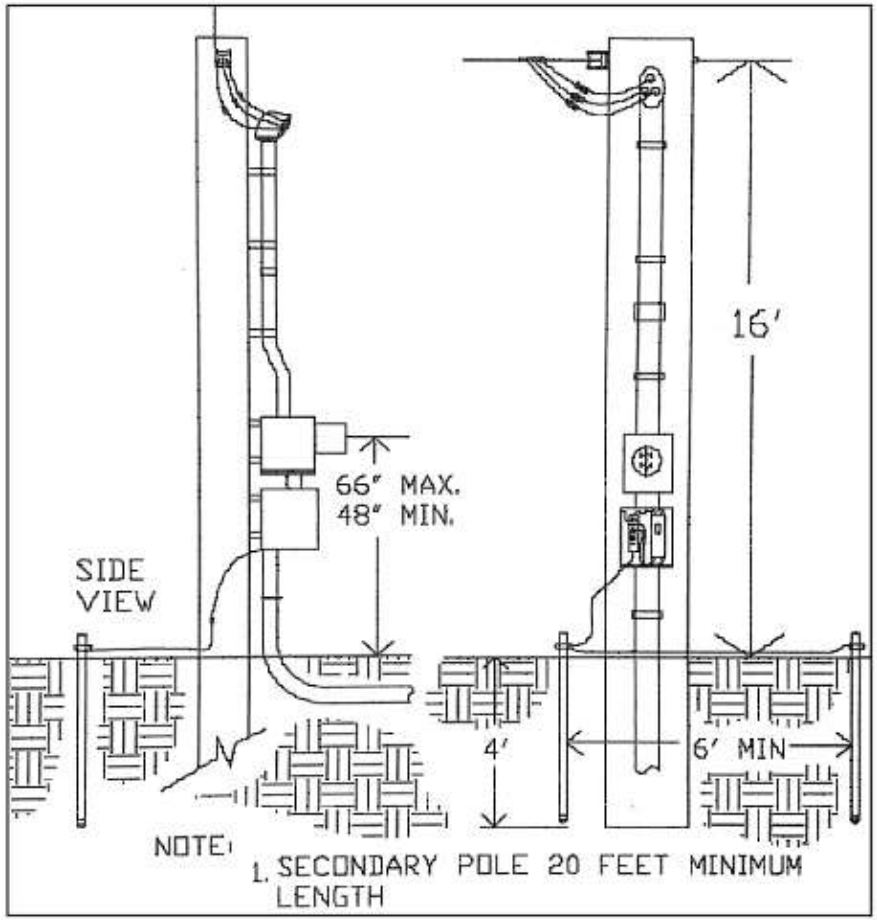

01
C5-03

SECONDARY RISER POLE W/ METER SOCKET

NOT DRAWN TO SCALE

United States Department of Agriculture
Forest Service

R03
SOUTHWESTERN REGION

STAMPS, LOGOS, AND SEALS

NO.	REVISION / ISSUE	DATE
4		
3		
2		
1		

PROJECT NAME

WATER SYSTEM IMPROVEMENTS

CARSON NATIONAL FOREST

TRES PIEDRAS RANGER DISTRICT

DRAWING TITLE

UTILITY DETAILS

DATE 04/07/2025	ARCHIVE NO.
DESIGNER A.TRU	DRAWING SHEET NO. C5-03
DRAWN A.TRU	
CHECKED X.XXX	
PROJECT NO.	SHEET 22 OF 22

5/6/26 16:24 AARONTRU LLO C:\USERS\AARONTRU\LLOBOX\7100ENGINEERING\7100ENGINEERING\7110 PROGRAM OF WORK\FY-26\CARSON - TRES PIEDRAS WATER LINE REPLACEMENT\DWG\TP WATER LINE IMPROVEMENTS.DWG